PTO/AIA/01 (06-12)
Approved for use through 01/31/2014. OMB 0651-0032
U.S. Patent and Trademark Office; U.S. DEPARTMENT OF COMMERCE
Under the Paperwork Reduction Act of 1995, no persons are required to respond to a collection of information unless it displays a valid OMB control number.

DECLARATION (37 CFR 1.63) FOR UTILITY OR DESIGN APPLICATION USING AN APPLICATION DATA SHEET (37 CFR 1.76)

Title of Invention	PORTION CAPSULE HAVING AN IDENTIFIER

As the below named inventor, I hereby declare that:

This declaration is directed to:

☑ The attached application, or

☐ United States application or PCT international application number PCT/EP2011/003677 filed on July 22, 2011.

The above-identified application was made or authorized to be made by me.

I believe that I am the original inventor or an original joint inventor of a claimed invention in the application.

I hereby acknowledge that any willful false statement made in this declaration is punishable under 18 U.S.C. 1001 by fine or imprisonment of not more than five (5) years, or both.

WARNING:

Petitioner/applicant is cautioned to avoid submitting personal information in documents filed in a patent application that may contribute to identity theft. Personal information such as social security numbers, bank account numbers, or credit card numbers (other than a check or credit card authorization form PTO-2038 submitted for payment purposes) is never required by the USPTO to support a petition or an application. If this type of personal information is included in documents submitted to the USPTO, petitioners/applicants should consider redacting such personal information from the documents before submitting them to the USPTO. Petitioner/applicant is advised that the record of a patent application is available to the public after publication of the application (unless a non-publication request in compliance with 37 CFR 1.213(a) is made in the application) or issuance of a patent. Furthermore, the record from an abandoned application may also be available to the public if the application is referenced in a published application or an issued patent (see 37 CFR 1.14). Checks and credit card authorization forms PTO-2038 submitted for payment purposes are not retained in the application file and therefore are not publicly available.

LEGAL NAME OF INVENTOR

Inventor: Marc KRÜGER Date (Optional): 17.01.13

Signature: [signature]

Note: An application data sheet (PTO/AIA/14 or equivalent), including naming the entire inventive entity, must accompany this form. Use an additional PTO/SB/AIA01 form for each additional inventor.

This collection of information is required by 35 U.S.C. 115 and 37 CFR 1.63. The information is required to obtain or retain a benefit by the public which is to file (and by the USPTO to process) an application. Confidentiality is governed by 35 U.S.C. 122 and 37 CFR 1.11 and 1.14. This collection is estimated to take 1 minute to complete, including gathering, preparing, and submitting the completed application form to the USPTO. Time will vary depending upon the individual case. Any comments on the amount of time you require to complete this form and/or suggestions for reducing this burden, should be sent to the Chief Information Officer, U.S. Patent and Trademark Office, U.S. Department of Commerce, P.O. Box 1450, Alexandria, VA 22313-1450. DO NOT SEND FEES OR COMPLETED FORMS TO THIS ADDRESS. **SEND TO: Commissioner for Patents, P.O. Box 1450, Alexandria, VA 22313-1450.**

If you need assistance in completing the form, call 1-800-PTO-9199 and select option 2.

PTO/SB/08a (01-10)
Approved for use through 07/31/2012. OMB 0651-0031
U.S. Patent and Trademark Office; U.S. DEPARTMENT OF COMMERCE

Under the Paperwork Reduction Act of 1995, no persons are required to respond to a collection of information unless it contains a valid OMB control number.

INFORMATION DISCLOSURE STATEMENT BY APPLICANT

(Not for submission under 37 CFR 1.99)

Application Number	
Filing Date	2013-01-18
First Named Inventor	Marc KRÜGER
Art Unit	N/A
Examiner Name	N/A
Attorney Docket Number	26571-0030-C1

U.S.PATENTS Remove

Examiner Initial*	Cite No	Patent Number	Kind Code[1]	Issue Date	Name of Patentee or Applicant of cited Document	Pages,Columns,Lines where Relevant Passages or Relevant Figures Appear
	1					

If you wish to add additional U.S. Patent citation information please click the Add button. Add

U.S.PATENT APPLICATION PUBLICATIONS Remove

Examiner Initial*	Cite No	Publication Number	Kind Code[1]	Publication Date	Name of Patentee or Applicant of cited Document	Pages,Columns,Lines where Relevant Passages or Relevant Figures Appear
	1	20080187638	A1	2008-08-07	Hansen	
	2	20020048621	A1	2002-04-25	Boyd et al.	

If you wish to add additional U.S. Published Application citation information please click the Add button. Add

FOREIGN PATENT DOCUMENTS Remove

Examiner Initial*	Cite No	Foreign Document Number[3]	Country Code[2] ¡	Kind Code[4]	Publication Date	Name of Patentee or Applicant of cited Document	Pages,Columns,Lines where Relevant Passages or Relevant Figures Appear	T[5]
	1	1974638	EP	A1	2008-10-01	Tchibo GmbH		☐
	2	2912124	FR	A1	2008-08-08	Compagnie Mediterraneenne Des Cafe		☐

INFORMATION DISCLOSURE STATEMENT BY APPLICANT (Not for submission under 37 CFR 1.99)	Application Number	
	Filing Date	2013-01-18
	First Named Inventor	Marc KRÜGER
	Art Unit	N/A
	Examiner Name	N/A
	Attorney Docket Number	26571-0030-C1

	3	1849718	EP	A1	2007-10-31	Cafe do Brasil S.p.A.		☐
	4	2005044067	WO	A1	2005-05-19	Griffes, Consulting, SA		☐
	5	1471012	EP	A2	2004-10-27	Ideacorp AG		☐
	6	02/078498	WO	A1	2002-10-10	Eugster/Frismag AG		☐
	7	0468079	EP	A1	1992-01-29	Societe Des Produits Nestle S.A.		☐
	8	0468078	EP	A1	1992-01-29	Societe Des Produits Nestle S.A.		☐
	9	2556323	FR	A1	1985-06-14	MUNIER, Rene		☐

If you wish to add additional Foreign Patent Document citation information please click the Add button Add

NON-PATENT LITERATURE DOCUMENTS Remove

Examiner Initials*	Cite No	Include name of the author (in CAPITAL LETTERS), title of the article (when appropriate), title of the item (book, magazine, journal, serial, symposium, catalog, etc), date, pages(s), volume-issue number(s), publisher, city and/or country where published.	T[5]
	1		☐

If you wish to add additional non-patent literature document citation information please click the Add button Add

INFORMATION DISCLOSURE STATEMENT BY APPLICANT (Not for submission under 37 CFR 1.99)	Application Number	
	Filing Date	2013-01-18
	First Named Inventor	Marc KRÜGER
	Art Unit	N/A
	Examiner Name	N/A
	Attorney Docket Number	26571-0030-C1

EXAMINER SIGNATURE			
Examiner Signature		Date Considered	

*EXAMINER: Initial if reference considered, whether or not citation is in conformance with MPEP 609. Draw line through a citation if not in conformance and not considered. Include copy of this form with next communication to applicant.

[1] See Kind Codes of USPTO Patent Documents at www.USPTO.GOV or MPEP 901.04. [2] Enter office that issued the document, by the two-letter code (WIPO Standard ST.3). [3] For Japanese patent documents, the indication of the year of the reign of the Emperor must precede the serial number of the patent document. [4] Kind of document by the appropriate symbols as indicated on the document under WIPO Standard ST.16 if possible. [5] Applicant is to place a check mark here if English language translation is attached.

INFORMATION DISCLOSURE STATEMENT BY APPLICANT (Not for submission under 37 CFR 1.99)	Application Number	
	Filing Date	2013-01-18
	First Named Inventor	Marc KRÜGER
	Art Unit	N/A
	Examiner Name	N/A
	Attorney Docket Number	26571-0030-C1

CERTIFICATION STATEMENT

Please see 37 CFR 1.97 and 1.98 to make the appropriate selection(s):

☐ That each item of information contained in the information disclosure statement was first cited in any communication from a foreign patent office in a counterpart foreign application not more than three months prior to the filing of the information disclosure statement. See 37 CFR 1.97(e)(1).

OR

☐ That no item of information contained in the information disclosure statement was cited in a communication from a foreign patent office in a counterpart foreign application, and, to the knowledge of the person signing the certification after making reasonable inquiry, no item of information contained in the information disclosure statement was known to any individual designated in 37 CFR 1.56(c) more than three months prior to the filing of the information disclosure statement. See 37 CFR 1.97(e)(2).

☐ See attached certification statement.

☐ The fee set forth in 37 CFR 1.17 (p) has been submitted herewith.

☒ A certification statement is not submitted herewith.

SIGNATURE

A signature of the applicant or representative is required in accordance with CFR 1.33, 10.18. Please see CFR 1.4(d) for the form of the signature.

Signature	/Brian T. Sattizahn/	Date (YYYY-MM-DD)	2013-01-18
Name/Print	Brian T. Sattizahn	Registration Number	46,401

This collection of information is required by 37 CFR 1.97 and 1.98. The information is required to obtain or retain a benefit by the public which is to file (and by the USPTO to process) an application. Confidentiality is governed by 35 U.S.C. 122 and 37 CFR 1.14. This collection is estimated to take 1 hour to complete, including gathering, preparing and submitting the completed application form to the USPTO. Time will vary depending upon the individual case. Any comments on the amount of time you require to complete this form and/or suggestions for reducing this burden, should be sent to the Chief Information Officer, U.S. Patent and Trademark Office, U.S. Department of Commerce, P.O. Box 1450, Alexandria, VA 22313-1450. DO NOT SEND FEES OR COMPLETED FORMS TO THIS ADDRESS. **SEND TO: Commissioner for Patents, P.O. Box 1450, Alexandria, VA 22313-1450.**

Privacy Act Statement

The Privacy Act of 1974 (P.L. 93-579) requires that you be given certain information in connection with your submission of the attached form related to a patent application or patent. Accordingly, pursuant to the requirements of the Act, please be advised that: (1) the general authority for the collection of this information is 35 U.S.C. 2(b)(2); (2) furnishing of the information solicited is voluntary; and (3) the principal purpose for which the information is used by the U.S. Patent and Trademark Office is to process and/or examine your submission related to a patent application or patent. If you do not furnish the requested information, the U.S. Patent and Trademark Office may not be able to process and/or examine your submission, which may result in termination of proceedings or abandonment of the application or expiration of the patent.

The information provided by you in this form will be subject to the following routine uses:

1. The information on this form will be treated confidentially to the extent allowed under the Freedom of Information Act (5 U.S.C. 552) and the Privacy Act (5 U.S.C. 552a). Records from this system of records may be disclosed to the Department of Justice to determine whether the Freedom of Information Act requires disclosure of these record s.

2. A record from this system of records may be disclosed, as a routine use, in the course of presenting evidence to a court, magistrate, or administrative tribunal, including disclosures to opposing counsel in the course of settlement negotiations.

3. A record in this system of records may be disclosed, as a routine use, to a Member of Congress submitting a request involving an individual, to whom the record pertains, when the individual has requested assistance from the Member with respect to the subject matter of the record.

4. A record in this system of records may be disclosed, as a routine use, to a contractor of the Agency having need for the information in order to perform a contract. Recipients of information shall be required to comply with the requirements of the Privacy Act of 1974, as amended, pursuant to 5 U.S.C. 552a(m).

5. A record related to an International Application filed under the Patent Cooperation Treaty in this system of records may be disclosed, as a routine use, to the International Bureau of the World Intellectual Property Organization, pursuant to the Patent Cooperation Treaty.

6. A record in this system of records may be disclosed, as a routine use, to another federal agency for purposes of National Security review (35 U.S.C. 181) and for review pursuant to the Atomic Energy Act (42 U.S.C. 218(c)).

7. A record from this system of records may be disclosed, as a routine use, to the Administrator, General Services, or his/her designee, during an inspection of records conducted by GSA as part of that agency's responsibility to recommend improvements in records management practices and programs, under authority of 44 U.S.C. 2904 and 2906. Such disclosure shall be made in accordance with the GSA regulations governing inspection of records for this purpose, and any other relevant (i.e., GSA or Commerce) directive. Such disclosure shall not be used to make determinations about individuals.

8. A record from this system of records may be disclosed, as a routine use, to the public after either publication of the application pursuant to 35 U.S.C. 122(b) or issuance of a patent pursuant to 35 U.S.C. 151. Further, a record may be disclosed, subject to the limitations of 37 CFR 1.14, as a routine use, to the public if the record was filed in an application which became abandoned or in which the proceedings were terminated and which application is referenced by either a published application, an application open to public inspections or an issued patent.

9. A record from this system of records may be disclosed, as a routine use, to a Federal, State, or local law enforcement agency, if the USPTO becomes aware of a violation or potential violation of law or regulation.

Electronic Patent Application Fee Transmittal

Application Number:	
Filing Date:	
Title of Invention:	PORTION CAPSULE HAVING AN IDENTIFIER
First Named Inventor/Applicant Name:	Marc KRÜGER
Filer:	Brian T. Sattizahn/Kerri Smith
Attorney Docket Number:	26571-0030-C1

Filed as Large Entity

Utility under 35 USC 111(a) Filing Fees

Description	Fee Code	Quantity	Amount	Sub-Total in USD($)
Basic Filing:				
Utility application filing	1011	1	390	390
Utility Search Fee	1111	1	620	620
Utility Examination Fee	1311	1	250	250
Pages:				
Claims:				
Miscellaneous-Filing:				
Petition:				
Patent-Appeals-and-Interference:				

Description	Fee Code	Quantity	Amount	Sub-Total in USD($)
Post-Allowance-and-Post-Issuance:				
Extension-of-Time:				
Miscellaneous:				
			Total in USD ($)	**1260**

Electronic Acknowledgement Receipt

EFS ID:	14735853
Application Number:	13744623
International Application Number:	
Confirmation Number:	8894
Title of Invention:	PORTION CAPSULE HAVING AN IDENTIFIER
First Named Inventor/Applicant Name:	Marc KRÜGER
Customer Number:	26587
Filer:	Brian T. Sattizahn/Kerri Smith
Filer Authorized By:	Brian T. Sattizahn
Attorney Docket Number:	26571-0030-C1
Receipt Date:	18-JAN-2013
Filing Date:	
Time Stamp:	12:17:41
Application Type:	Utility under 35 USC 111(a)

Payment information:

Submitted with Payment	yes
Payment Type	Deposit Account
Payment was successfully received in RAM	$1260
RAM confirmation Number	10285
Deposit Account	501059
Authorized User	

The Director of the USPTO is hereby authorized to charge indicated fees and credit any overpayment as follows:

Charge any Additional Fees required under 37 C.F.R. Section 1.16 (National application filing, search, and examination fees)

Charge any Additional Fees required under 37 C.F.R. Section 1.17 (Patent application and reexamination processing fees)

Charge any Additional Fees required under 37 C.F.R. Section 1.19 (Document supply fees)

Charge any Additional Fees required under 37 C.F.R. Section 1.20 (Post Issuance fees)

Charge any Additional Fees required under 37 C.F.R. Section 1.21 (Miscellaneous fees and charges)

File Listing:

Document Number	Document Description	File Name	File Size(Bytes)/ Message Digest	Multi Part /.zip	Pages (if appl.)
1		A3199254.PDF	132857 6296e8cfe5a41de0f7bf4a28e68856e5c9ad4b37	yes	18

Multipart Description/PDF files in .zip description

Document Description	Start	End
Specification	1	16
Claims	17	17
Abstract	18	18

Warnings:

Information:

2	Drawings-only black and white line drawings	A3199171.PDF	4494021 1f2dcdc99d760cee9cb4498c98f0b1f20137a106	no	12

Warnings:

Information:

3	Application Data Sheet	A3193893.PDF	1433047 1befb6581dd52cfccc642c1197f3ed861310c2c2	no	6

Warnings:

Information:

4	Oath or Declaration filed	A3198933.PDF	90068 9bfa1ff111b89470c81838c1a365132875ddc5dc	no	1

Warnings:

Information:

5	Information Disclosure Statement (IDS) Form (SB08)	A3194078.PDF	612862 ae6d98725aae742157dc8b80282c8e873d27984e	no	5

Warnings:

Information:

6	Foreign Reference	A3193924.PDF	15203513 b6faababb04453331295b1ec7031e88bcab4651a	no	12

Warnings:

Information:					
7	Foreign Reference	A3193998.PDF	15852001 58107d9f3d8aa21cd2396ee644e969abf9854617	no	18
Warnings:					
Information:					
8	Foreign Reference	A3193956.PDF	13237406 9e79bc8f3a735c7b42db81966fee21ac15acff9f	no	10
Warnings:					
Information:					
9	Foreign Reference	A3193929.PDF	18576615 9fcca641f71ecf839b01aebc930fd6d3b99fad78	no	21
Warnings:					
Information:					
10	Foreign Reference	A3193943.PDF	22536736 4dfaf719862422b89c1b326f49f21f380597bcae	no	15
Warnings:					
Information:					
11	Foreign Reference	A3193919.PDF	19987575 b8acc4a6747bee4e84311f3443b37b0e11726fda	no	21
Warnings:					
Information:					
12	Foreign Reference	A3194046.PDF	10486659 949f1fce7a88f3ebb69c08843e5ab1303ff13545	no	10
Warnings:					
Information:					
13	Foreign Reference	A3194040.PDF	9935839 614aa8000553a4f0f7665737ebe1ad4c4dc78cd2	no	10
Warnings:					
Information:					
14	Foreign Reference	A3194043.PDF	4403719 9caafd343f28bd9b97baf62ab699a20a6d427440	no	5
Warnings:					
Information:					
15	Fee Worksheet (SB06)	fee-info.pdf	33156 b9a64e506f412b9e113a0837c418ac1464fd4271	no	2
Warnings:					

Information:	
Total Files Size (in bytes):	137016074

This Acknowledgement Receipt evidences receipt on the noted date by the USPTO of the indicated documents, characterized by the applicant, and including page counts, where applicable. It serves as evidence of receipt similar to a Post Card, as described in MPEP 503.

New Applications Under 35 U.S.C. 111
If a new application is being filed and the application includes the necessary components for a filing date (see 37 CFR 1.53(b)-(d) and MPEP 506), a Filing Receipt (37 CFR 1.54) will be issued in due course and the date shown on this Acknowledgement Receipt will establish the filing date of the application.

National Stage of an International Application under 35 U.S.C. 371
If a timely submission to enter the national stage of an international application is compliant with the conditions of 35 U.S.C. 371 and other applicable requirements a Form PCT/DO/EO/903 indicating acceptance of the application as a national stage submission under 35 U.S.C. 371 will be issued in addition to the Filing Receipt, in due course.

New International Application Filed with the USPTO as a Receiving Office
If a new international application is being filed and the international application includes the necessary components for an international filing date (see PCT Article 11 and MPEP 1810), a Notification of the International Application Number and of the International Filing Date (Form PCT/RO/105) will be issued in due course, subject to prescriptions concerning national security, and the date shown on this Acknowledgement Receipt will establish the international filing date of the application.

PORTION CAPSULE HAVING AN IDENTIFIER

CROSS REFERENCE TO RELATED APPLICATIONS

This application is a Continuation of International Application No. PCT/EP2011/003677, filed on July 22, 2011, entitled PORTION CAPSULE HAVING AN IDENTIFIER which application is hereby incorporated by reference in its entirety.

BACKGROUND

The present invention relates to a portion capsule for producing a beverage, comprising a base element having a cavity in which a beverage raw material is provided and which is closed by a membrane fastened to the base element.

Such capsules are well known and are being launched onto the market in abundant variety. Since these capsules are often quite similar, it is possible that the manufacturer's capsules are used in a coffee machine designed by another manufacturer, although they are not suited for it. This may result in significant security issues and/or the coffee machine may be damaged.

The object of the present invention is therefore to provide a portion capsule which only is suitable for a specific coffee machine.

SUMMARY

The object is accomplished according to the present invention by a portion capsule for producing a beverage, comprising a base element having a cavity in which a beverage raw material is provided and which is closed by a membrane fastened to the base element, wherein it has an identifier, which allows to individualize the respective portion capsule.

The present invention relates to a capsule for producing a beverage or foodstuff, comprising a base element having a cavity in which a beverage raw material is provided. Such capsules are, for example made of plastic, natural materials and/or biodegradable materials and substantially have a base element, in particular a deep-drown base element, i.e. it is substantially designed frustoconically or cylindrically. The beverage raw material is arranged within the portion capsule's cavity and is extracted and/or dissolved in a liquid, in particular water. After the beverage raw material has been filled into the cavity the base element is usually sealed by a membrane. In particular the membrane is localized on the opposite side of the base element's bottom. The membrane can be made of the same or different material as the base element and is substantially attached to the base element using a sealing and/or

an adhesive bonding. Additionally the cavity could contain one or several built-in elements, such as, for example a filter, a non-woven, a felt, a shut-off device and/or something similar to those. For the case that a non-woven and a felt are arranged within the cavity, they are interconnected preferably. The non-woven and/or the felt can be made of several layers in such a way that the layers may differ in the kind of its starting material and/or its preparation. Moreover the membrane and/or the bottom can be provided with a plurality of recesses (holes).

According to the present invention, it is provided that the portion capsule has an identifier that allows to individualize the respective portion capsule. In the context of this invention individualizing means that the respective portion capsule can be assigned to a group of capsules that are suitable for the coffee machine preferably. It is not necessary that the coffee machine is able to specify and/or identify the portion capsule. In fact it is much more important that the coffee machine associates the portion capsule with a group of portion capsules, which is suitable for the coffee machine. In particular, individualizing means that those portion capsules that are not appropriate for the coffee machine cannot be inserted into and/or directly fall through the holder, which is designed for the portion capsules in the coffee machine, and/or the coffee machine operates only with the corresponding portion capsules. Preferably a sensor/detection system handles the identifier and compares it with a stored reference substantially. Preferably, the coffee machine, in particular the water-providing-pressure pump, will be activated if the detected identifier matches with the reference. Otherwise the coffee machine will not start operating. Preferably the detection system is placed in the region of the coffee machine's media chute designed for the portion capsules. According to another preferred embodiment of the invention, the detection system may be placed in the region of the brewing chamber. Another possible embodiment of the invention provides that the identifier prevents portion capsules from inserting into the coffee machine. Alternatively or additionally, means, in particular mechanical means, more preferably, one or more gearwheels, may be added to the media chute in order to guarantee that incorrect portion capsule cannot be inserted into the coffee machines by passing the media chute.

Preferably the identifier is composed of surface areas having different optical properties, for example reflection. These surfaces may be localized on the membrane, the side wall and/or the bottom of the portion capsules. Preferably, the portion capsule has at least two areas which differ in their optical properties, for example the reflection characteristics.

The detection of a recess and/or a bulge is also preferred. Preferably, recess and bulges alternate and/or at least two recesses or bulges are separately placed from each other. Especially it is possible that the recess and/or the bulge form a gearwheel that is attached to the outer border and/or at least partially extends to the wall region of the portion capsule. The recess and/or bulge may be produced by any shaping method, for example by deep drawing, preferably.

Furthermore, the recess may be realized by removing material. In particular the material's remove can be accomplished by punching or using a laser on condition that this processing does not damage a barrier layer placed in the portion capsule's material, which prevents moisture or aroma from escaping out of the portion capsule and/or water vapor or oxygen enters the capsule. The reading of the identifier, which is encoded in the recess and/or bulge, may be a result from a mechanical and/or optical method, for example. Alternatively or additionally, the identifier can be used to avoid that the portion capsule is inserted into the coffee machine. This applies in particular to the media chute. For example it is possible to design a portion capsule comprising a ring gear that is placed on its circumference and is compatible with another ring gear, which is placed in the media chute. If the media chute's ring gear only revolves for a corresponding ring gear of the portion capsule and its revolving allows the portion capsule to pass, only portion capsules equipped with the proper ring gear will pass the insertion lock.

According to a further subject matter of a preferred development of the present invention, the identifier may be included in the membrane. Preferably, the identifier is a layer or partial layer of the membrane. Such identifiers may be an optically detectable material, for example a fluorescent material. Furthermore, the identifier may be designed with layers made of metal or ferrous metal or stripes made of metal or ferrous metal in or on the membrane, respectively.

Preferably the identifier is a machine-readable imprint. This is realized with a print in food approved color, preferably. Fluorescent materials like paper or print materials, whose optical properties change under the influence of temperature, are favored also. Preferably the print is a barcode, a logo or a rapport.

According to a further subject matter of a preferred development of the present invention, the identifier is an electrically conductive section, which can be placed all over the portion capsule, but is localized on the side wall, the edge and / or the floor preferably. The electrically conductive section, which is inserted into the coffee machine, can become part of

an electric circuit and causes therefore a measurable change, which leads to the identification of the respective portion capsule. In a further preferred embodiment, the identifier is a section made of a ferromagnetic material.

Another construction version favors a RFID chip being the identifier.

If the portion capsule is customized according to the invention, portion capsules that are not in line with the coffee machine will be prevented from inserting into the coffee machine. Furthermore it is possible that the identifier allows to identify the portion capsule located in the brewing chamber in such a way that the production process of beverage or food may be controlled, for example by adjusting the temperature, the pressure and/or the amount of water.

According to a further subject matter of a preferred development of the present invention, the portion capsule's material is weakened in the bottom area caused by a selective material removal, for example by using a laser. The weakening is provided for piercing the portion capsules using a mandrel. This procedure is needed for the beverage's preparation. Since the material is weakened in the section, which is treated with a laser and is supposed to be pierced using the mandrel, the degree of necessary force for piercing the portion capsule is reduced. The mandrel of such coffee machines is usually equipped with a force limitation that limits the force, which is dedicated for pressing the mandrel against the portion capsule's bottom. This preparation avoids that portion capsules having no appropriate weakening can be used in such a coffee machine. Consequently the weakening represents another kind of identifier.

According to a further subject matter of a preferred development of the present invention, the portion capsule has an edge region, which is preferably attached to the base element. Preferably, the edge is located opposite of the base element's bottom area. After the raw material has been filled in the portion capsule, a membrane can be attached to this edge region, for instance. Moreover the edge can also designed for guiding the portion capsule into the chute in order to position the portion capsule in the brewing chamber properly. Simultaneously it is possible to use the surface of the edge for stopping and/or sealing.

Preferably provision is made for the portion capsule to have means for fit locking, friction locking and/or detection in the edge region. The means for fit locking and/or friction locking may be used to activate a complementary mechanism, which is located in the coffee machine, in order to allow inserting the portion capsule into the coffee machine and/or

starting a sensor, like a gearwheel, that transmits a signal to a control unit depending on whether the portion capsule corresponds to the coffee machine or not. Alternatively or additionally, a detector may identify the mean for fit locking, friction locking and/or detection in order to check that the portion capsule is suitable to the respective coffee machine.

Preferably the means for fit locking, friction locking and/or detection is a gearwheel or a gearwheel' segment, which are located, in particular, in the outer area of the edge region. The teeth of the gearwheel or the gearwheel' segment may be shaped in any commonly used form, which is known, for example, by an expert from gear manufacturing. Preferably it is provided that these teeth are triangular, rectangular, square or wavy.

Preferably there is a sealing surface, that is arranged on the interior side relative to the gearwheel or the gearwheel' segment.

Another and preferred state-of-the-art technology is a portion capsule for producing a beverage, comprising a base element substantially designed frustoconically or cylindrically, having a cavity in which a beverage raw material is provided and which is closed by a membrane fastened to the base element with the base element having a wall region and the base element having a bottom area, which is preferably located opposite to the membrane, with the wall region having several grooves and the grooves which are located between membrane and bottom area covering the wall region along its height at least partially. The grooves may be also located in the edge region, in particular on the outer area of the edge region.

This portion capsule has the advantage over the portion capsule according to the state-of-the-art technology that, for instance, the grooves reinforce the base element's wall region. On the one side these grooves make the portion capsule more stable towards mechanical forces and prevent the portion capsule from deformation and buckling, in particular. The arrangement of the grooves, which are located at the wall region, additionally improves the performance of the portion capsule while the extraction liquid flows through it in the brewing chamber, since the arrangement of the grooves, in particular those partially expending over the wall region between membrane and bottom area, increase quality and reliability of the extraction process significantly. According to the invention another advantage is that the base element's thickness can be reduced, because the use of grooves improves the physical stability. The production of the portion capsule is therefore much less expensive and more environmentally friendly. On the other side the grooves reduce or avoid the contact between the portion capsule's wall region and the wall of the brewing chamber. As a result ejecting or

removing the portion capsule from the brewing chamber is made easier. Another advantage of using a plurality of grooves is that the stream of the extraction liquid, which flows along the base element in the cavity, can be optimized by choosing a grooves' structure that is able, for example, to generate on the one hand a better or stronger turbulence in the extraction liquid or on the other hand a more uniform (laminar) flow of the extraction liquid, in the wall region. The control of the liquid may be obtained by the structure of the grooves itself or by using simple means additionally. A stronger turbulence compared to the one known in the state-of-the-art has the advantage that no unintended and casual main streams are formed in the raw materials. Instead the extraction liquid equally flows through the raw material in all of the volume. Thus the extraction process is much more efficient and can be controlled more precisely and reproducibly.

In particular the raw material may be coffee powder (especially ground roasted coffee), chocolate powder, milk powder, tea or the like. Alternatively, it is conceivable that the raw material is a beverage's extract, such as instant coffee for example.

In particular, the grooves are recesses and bulges, which are preferably directed along a main extension and are preferably extended along the wall portion or the periphery of the edge region. More preferably, the grooves are formed as webs and/or notches. A gearwheel, for instance, may be obtained by the grooves. Therefore the grooves are part of the base elements' wall, optionally located on the inner side facing to the cavity and/or on the outside facing away from the cavity.

According to a preferred embodiment of the present invention, it is provided that the grooves form an identifier that allows individualizing the portion capsule. In the context of this invention individualizing preferably means that the respective portion capsule can be assigned to a group of capsules that are suitable for the respective coffee machine or the machine producing a beverage. It is not necessary that the coffee machine or the device for producing a beverage is able to specify and/or identify the portion capsule. It is more important that the device for producing a beverage, in particular a coffee machine, associates the portion capsule with a group of portion capsules, which is appropriate for the respective device for producing a beverage, in particular a coffee machine. In particular, individualizing means that those portion capsules that are not appropriate for the coffee machine (or the device producing the beverage) cannot be inserted into and/or directly fall through the holder, which is designed for the portion capsules in the coffee machine (or the device producing the beverage), and/or the coffee machine (or the device producing the beverage) operates only with corresponding portion capsules ("proper portion capsule"). In

particular, individualizing means that the coffee machine or the device producing the beverage will not operate properly in the intended use, if the used portion capsule is not customized according to the invention. Preferably a sensor/detection system, attached to the coffee machine or the device producing the beverage, records the identifier and substantially compares it with a stored reference. In particular, it is possible that such an identification process is based on a mechanical fitting, especially a fitting of a gearwheel or of a contour comparable with a gearwheel, which is attached to the device producing the beverage or the coffee machine and interacts with the portion capsule. It is preferred that the device for producing the beverage or the coffee machine only will operate, if the identifier matches to the reference or the mechanical fittings match with each other. In this case the device for producing the beverage particularly starts to operate, especially activates a pressure or water pump. The mean for detection or mechanical fitting is preferably located in the region of the media chute or in the region of the device for producing the beverage. Alternatively the identifier or the mechanical fitting may avoid that an unsuitable portion capsule is inserted into the device for producing the beverage. A portion capsule, which is designed in accordance with the invention, makes it possible that a portion capsule that is not designed for the device for producing a beverage cannot be inserted into it. Additionally the identifier allows that the device for producing the beverage, especially the coffee machine, may specify the sort of the portion capsule and thereby control the production process of beverage and food by adapting, for example, the pressure, the temperature and/or the amount of water.

According to a further preferred embodiment of the present invention, it is provided that at least a part of the grooves and at least in a subarea parallel to the main plane of the membrane is gearwheel shaped.

According to the present invention it is an advantage that it is possible to increase the stability of the portion capsule's wall region, to realize improved turbulences of the extraction liquid and thereby to improve the extraction's process under the same conditions, for example, such as material thickness and the like. Another advantage is that it is easy to generate a mechanical identifier or a mechanical fitting that matches with a fitting tool that belongs to the device for producing a beverage. According to the invention it is an further advantage that, for example, a gearwheel, which is attached to the device for producing a beverage and is, for example, located in the region of the media chute or similar, can possibly interacts with the gearwheel's contour of the portion capsule. In this way it is possible to generate a mechanical fitting that allow to individualize the portion capsule as a proper one and/or to specify the sort of portion capsule and/or to rotate the portion capsule

about an axis of rotation, that is perpendicular to the membrane's main plane, by using the gearwheel's arrangement. Such an embodiment of the invention makes it possible that the portion capsule is always opened with the device for producing a beverage on the same spot (with respect to its angular position) and therefore the raw material is extracted on the same manner. Moreover the grooves prevent the portion capsule from being inserted into the coffee machine.

In a preferred version of the invention, it is provided that there is a flange/edge region being averted from the bottom region, for fixing the membrane to the base element, where in the wall region between flange/edge region and bottom region preferably has a border and the grooves are being preferably extended to this border.

Because of this it is another advantage according to the invention that on the one hand the wall region can be constructed in a stable and reinforced manner and on the other hand the gearwheel shaped contour of the grooves, located at the wall region, is able to absorb a relative high load. With that it is possible that the portion capsule can be rotated easily and without any damaging of the portion capsule within the device for producing a beverage.
Preferably the base element's diameter is enlarged in the border's region compared to the wall region, which range from the border to the bottom region.

This gives rise to the advantageous possibility to stack portion capsule or portion capsules' base elements easily and robustly.

Moreover it is preferred that at least a part of the grooves are gearwheel shaped and at least a plane, which is at least partially gearwheel shaped, is parallel to the membrane in such a way that the gearwheel shaped contour expands over the borders or the flange/edge region.

Further preferred versions of the present invention relate to portion capsules that implement one or more of the following characteristics:

- the base element tapers in the direction of the flange in the border's region,
- the grooves directed toward the bottom region expand over the border's region,
- the grooves approximately cover 20% -80%, preferably 40% - 60% of the wall region, which is placed between the border and the bottom region,
- the grooves are constructed in such a way that the wall region is reinforced and/or the grooves causes an extraction liquid's turbulence in the cavity.

Other preferred versions of the present invention relate to portion capsules that are manufactured in such a way that the ratio of the diameter of that wall region of the base element which adjoins the flange to the diameter of the flange is between 0.85 and 0.89, and in particular substantially 0.87.

In a preferred version the wall region's diameter, which is adjacent to the flange, is 39 millimeter and the flange's diameter is 45 millimeter. Another advantageous version of the invention prefers a base element having a thicker wall region in the border's region compared to the wall region between bottom region and flange. Since the portion capsule's design, which contains grooves in the wall region, improve its stability, it is possible to save material by manufacturing the portion capsule and therefore to reduce cost and energy required for manufacturing the portion capsules.

According to the invention it is further provided that a filter element is arranged into the cavity. Such a filter element divides the cavity into a first region for accommodating the beverage raw material and into a second region for accommodating a beverage extract. In particular, it is provided that the filter element is made of a non-woven material.

According to a further subject matter or a preferred development of the present invention the portion capsule according to the invention is intended for the preparation of a hot beverage. In the following the invention is explained based on the figures 1 – 22. These explanations do not restrict the general idea of the invention.

BRIEF DESCRIPTION OF THE DRAWINGS

Fig. 1 shows a portion capsule containing sections that differs optically.

Fig. 2 shows a portion capsule containing a barcode.

Fig. 3 shows a portion capsule with recesses and bulges.

Fig. 4 shows a portion capsule containing sections that differs optically.

Fig. 5 shows a portion capsule with a key function.

Fig. 6 shows a portion capsule's wall that is electrically conductive.

Fig. 7 shows a portion capsule's wall containing sections that differs optically.

Fig. 8 shows an enlarged pot construction of the portion capsule's wall.

Fig. 9 shows an edge region that is electrically conductive.

Fig. 10 shows a portion capsule containing a bottom that is electrically conductive.

Fig.11 shows an embodiment containing a layer that can be detected by a metal detector.

Fig.12 shows a metallic strainer.

Fig.13 shows a portion capsule containing a ferromagnetic section.

Fig.14 shows a portion capsule containing a barcode.

Fig.15 shows a portion capsule containing a section, which is electrically conductive, in the wall.

Fig.16 shows a portion capsule with a gearwheel placed in the brewing chamber.

Fig.17 a-c show different embodiments of the portion capsule according to figure 16.

Fig.18 shows the portion capsule according to the figures 16 and 17, when the portion capsule is fit locking with a gearwheel.

Fig.19 and 20 show a schematic view of a portion capsule according to an embodiment of the presented invention.

Fig. 21 and 22 show two sectional views of the portion capsule according to an embodiment of the presented invention.

DETAILED DESCRIPTION

The view illustrated on the right side of **Figure 1** shows a portion capsule 1 comprising a base element 2 that has a wall region 2.1 and a bottom area 2.2. The wall region 2.1 and the bottom area 2.2 define a cavity, which may include the raw material and perhaps a built-in element. After filling the cavity is sealed by a membrane, which is preferably attached to the

edge region 2.4 of the base element using seal or glue. This portion capsule can be inserted into a brewing chamber shown in figure 12, with a liquid, in particular water, flowing through it. During this process the raw material is extracted or dissolved and therefore the beverage is produced. According to the invention the portion capsule has only one identifier that allows to determinate whether the respective portion capsule goes with the coffee machine's brewing chamber and the parameters for processing are chosen properly. If it is not the case, significant security issues arise. Inserting the wrong portion capsule, for example, endanger the brewing chamber's tightness. In this case hot water can be discharged under high pressure and therefore compromise the user's safety. Otherwise it is also possible that inserting the wrong portion capsule damages the coffee machine. In this example the identifier is represented by several raised areas 8, which differ in reflection properties from the sections between the raised areas. As shown by the arrows the bulges are passed by a mean for detection (here: an optical detector) that is able to differentiate between the unequal sections 5, 6 having different optical properties such as, for example, reflection. Switching between the different sections or the number of bulges represents the identifier. After the identifier has been read out the identifier is compared to a stored reference. If the identifier agrees with the reference, the coffee machine will start operating. Particularly the pump, which is for example responsible for pushing hot water through the brewing chamber, will not start operating, if the identifier does not agree with the reference.

All the remarks concerning the identifier apply to all the examples.

Figure 2 shows another embodiment of the portion capsule according to the invention. Here the portion capsule has a barcode placed in the area of the membrane's top surface. This bar-code may be printed by material removal or may be generated by a medium that is integrated in the foil and can be detected optically such as a fluorescence agent. Alternatively metal rings may be part of the foil or attached to the foil. The bar-code's section may be made of a ferromagnetic material. As shown by the arrow 15 the bar-code alternatively can be attached to the base element's edge region being averted from the membrane. Such a bar-code is read out by a detector 13 placed, for example, in the media chute. The bar-code represents the identifier according to invention.

Figure 3 shows another embodiment of the portion capsule according to the invention. In the present case the identifier comprises recesses and bulges, which result from material removal or reshaping the portion capsule as shown here by the example of the portion capsule's wall 2.1. In the present case recesses and bulges interact with a mean for detection 13, which operates like a key, wherein the coffee machine only start operating,

when all elements 13 are placed in the respective recess. Therefore an electric circuit may be changed or especially closed.

Figure 4 shows an embodiment of the portion capsule being substantially identical to the embodiment illustrated in figure 1. As an alternative version of the invention the figure additionally shows that the sections differing in terms of optical properties can be attached to the cover foil, for example in the form of a bar-code.

Figure 5 shows an embodiment of the portion capsule being substantially identical to the embodiment illustrated in figure 3. Again the recesses represent the key bit. The coffee machine only will start operating, if the recesses interact with the corresponding bulges and therefore an electric circuit is changed respectively. The placement of such a system is not restricted to the brewing chamber. For instance the system may be placed in the portion capsule's media chute.

Figure 6 shows a version of the invention that includes an electric material forming a surrounding ring, which preferably has a raised form. The electrically conductive material is scanned by electric sliding contacts, which are placed in the media chute and form electric contacts of an electric circuit, while the portion capsule is inserted.

Figure 7 an embodiment of the portion capsule being substantially identical to the embodiment illustrated in figure 6, in which it is provided that the ring area has reflective or mat sections, for example in form of a covering, and allows a read-out by means for optical detection, which are placed in the media chute and are part of a control current, while the portion capsule is inserted.

Figure 8 shows a relative broad and raised ring which represents the identifier. The media chute is equipped with a corresponding vacancy that tests whether the portion capsule has the proper identifier. The broad ring is scanned, for example, by mechanical sensors, which are placed in the media chute and close the contacts of an electric circuit, while the portions capsule is inserted.

Figure 9 shows another embodiment of the portion capsule according to the invention. In the present case an electrically conductive coat is integrated in the edge region's back and is scanned by electric sliding contacts, which are placed in the media chute and form electric contacts of an electric circuit, while the portion capsule is inserted.

Figure 10 shows another embodiment of the portion capsule according to the invention. In the present case the portion capsule has an electrically conductive coat such as a conductive varnish layer or an aluminum foil. The coat is scanned by electric sliding contacts, which form electric contacts of an electric circuit, while the portion capsule is inserted.

Figure 11 illustrates a version of the portion capsule having also an electrically conductive coat that is placed on its bottom and is identified by a metal sensor, which is placed in the chute and, for example, detects inductively, while the portion capsule is inserted.

The embodiment of the invention shown in **figure 12** has a build-in element made of metal (here a strainer 19) that is recognized as identifier by a metal detector.

The version of the invention shown in **figure 13** includes a ferromagnetic material placed at the portion capsule' bottom. The identifier is scanned, for example, by a magnet, which is placed in the chute, while the portion capsule is inserted. The ferromagnetic material acts as identifier.

Figure 10 shows another embodiment which includes a bar-code placed in the region of the cover foil.

According to the embodiment shown in **figure 15** a metallic ring is integrated in the wall and closes an electric circuit placed in region of the brewing chamber.

Figure 16 shows another embodiment of the portion capsule 1 according to the invention. The illustrated portion capsule features a base element that is basically conical-shaped in the present case and has a bottom region 2.2 and a wall region 2.1. It is provided that the base element contains the raw material and, if necessary, build-in elements like a filter as illustrated here. The expert knows that the build-in element may also include other build-in elements. A flange/edge region 2.4, which is preferably circular and, for example, may be used for sealing a cover foil to it, is attached to the end of the base element, which is placed opposite to the bottom. The flange/edge region has means for fit locking, friction locking and/or detection 2.4.2 in the outer area (outer circumference). As especially shown in the figures 17a – 17c the mean 2.4.2 is, in the present case, a gearwheel that is formed by several recesses/bulges evenly arranged in the edge region. Preferably, it is provided that the edge region has a sealing surface, which sealingly interacts with the sealing 21 attached to the brewing chamber 27, on the interior side of the gearwheel. The sealing 21 makes sure

that the water coming from a water inlet 28 flows rather through the portion capsule by passing a opening, which has been made by a mandrel 29, than around it.

Figure 17a – 17c show different embodiments of the mean 2.4.2.. According to the version shown in figure 17a the gearwheel has forty-five teeth. According to the version shown in figure 17b or 17c the gearwheel has twenty-two or twenty-nine teeth, respectively. The expert knows that the manufactured teeth can be shaped arbitrarily. All figures 17a – 17c demonstrate how the portion capsule 1 can be hold by a part of the brewing chamber 27 using two holding arms 30. The holding arms interacts with the mean 2.4.2.. If they are not available, the holding arms will not hold the portion capsule and the portion capsule will not be inserted into the brewing chamber and will fall through it into a dropping box instead.

Figure 18 shows the mean 2.4.2. along with an mean for fit locking 24, which is attached to the coffee machine and is represented by a pinion here. It is provided that the mean for fit locking 24 is placed in the media chute having a port for inserting the portion capsule in the coffee machine. The distance between the inner wall of the portion capsule 25 and the pinion 27 are designed in such a way that the portion capsule only will pass the port, if the mean for fit locking is formed complementary to the teeth of the pinion 27. Only in this case the portion capsule rotates the pinion 24 while it falls. Both rotating and falling are represented by arrows in the figure. The portion capsule needs the rotation for passing the media chute's port and falling in the intended position afterwards. If the portion capsule has no or wrong mean of fit locking, it will be impossible to place the portion capsule by passing the media chute in the intended position. Additionally or alternatively it is provided that the pinion 24 has a pick-up that detects the rotary movement and transmits it to a control unit. If the rotation at least correspond a defined rotating element, the control unit will activate, for example, the brewing unit. The expert knows that the portion capsule's border may include means for friction locking that interacts with a mean, for example an edge, and shift it in such a way that the shift is detected and therefore the brewing chamber is activated.

The expert moreover knows that a sensor, being for example a camera, which detects the form of the mean 2.4.2., may be installed in the media chute. In the present case the form and/or the distance between the teeth may be detected. If the proper portion capsule was inserted, a resulting signal could be transmitted to a control unit, which activates the brewing chamber.

Figure 19 schematically shows a view of another portion capsule's version according to an embodiment of the present invention. **Figure 20** illustrates the same portion capsule from a

different point of view schematically. Figure 19 shows the front view of the portion capsule. Figure 20 shows the portion capsule viewed from an angle below. In all figures the portion capsule is labeled with the reference sign 1. The portion capsule substantially has a frustoconically shaped base element 2, which is formed similar to a pot and encloses a cavity 3. The cavity 3 is sealed by a membrane 4. Since the viewing direction of figure 1 is essentially parallel to the plane, in which the membrane is located, the figure just adumbrate the membrane at the upper edge of the portion capsule. In particular the base element 2 comprises a soft, semi-rigid or rigid plastic material which is deep-drown, preferably. The membrane comprises a foil made of plastic material or aluminum. Preferably the base element has a circumferential mounting flange 17 in the region of the membrane, with the membrane and the mounting flange 17 being firmly bonded, in particular by welding or gluing. Preferably a filter element, which is not specifically depicted in the figures, is placed within the base element 2. For instance, the filter element is made of thermoplastic resin such as, for example, polypropylene. The filter element could also be made of a non-wovon material such as, for example, thermoplastic resin. Preferably the filter element divides the cavity 3 in two sections. It is provided that the first section can be filled with a raw material and the second section can be filled with and particularly collect a beverage's extract, which is not shown, during the extractions process. Both sections are not illustrated individually.

The portion capsule is intended for inserting into a brewing chamber or a device for producing a beverage, which is not shown here. In particular such a device for producing a beverage is a coffee machine. The device for producing a beverage could be also a machine that produces a tea drink, a chocolate drink or any other beverage. Preferably an extraction liquid, which is particularly water or hot water, is brought under high pressure into the brewing chamber of the device for producing a beverage. The extraction liquid interacts with the raw material of the beverage in such a way that an extract of a beverage or a beverage is generated. In particular the filter element is utilized as a strainer for the extract of a beverage.

According to the invention the base element 2 has a wall region 12 and a bottom area 11. The wall region 12 basically ranges from the flange 17 to the bottom region 11. Several grooves 15 are placed in the wall region. In particular these grooves are keyways that are integrated in the wall region 12 and are facing the cavity 3 and range from the flange 17 to the bottom region 11 (i.e. they run perpendicular according to figure 19). According to the invention provision is made for the grooves 15 to be extended vertically across the wall region, i.e. they run straight from the flange 17 to the bottom region 11, in which it is not necessary that they are extended over the whole length. The grooves are formed according to the invention in such a way that the wall region is reinforced or stiffened due to the

grooves 15. Moreover the plurality of the grooves 15, which are distributed over the wall region 12, realize an adhesion between wall region 12 and the brewing chamber's wall of the device for producing a beverage after the extraction process. This makes it easier to eject the portion capsule from the brewing chamber automatically. The portion capsule's version represented in figure 19 comprises a circumferential border 16 that is placed at the wall region 12 ranging from the flange 17 to the bottom area 11, namely adjacent to the flange 17 facing towards the bottom area 11. The border 16 has an enlarged diameter (parallel to the membrane 4) compared to the wall region's ranging from the border 16 to the bottom area 11. It is provided that the border's contour 16 is designed in such a manner that the border's diameter tapers towards the flange 7.

It is provided according to the portion capsule's embodiment, which is represented in figure 19 and is in accordance with the invention, that the grooves 15 are placed in the border's region in the first part, partially range from the border 16 to the bottom area 11 across the wall region 12, in the second part and then finally end. All in all the grooves cover, for example, around 50 % of the extension of the wall region 12, which ranges from the flange 7 to the bottom area 11, wherein one-third of the grooves' extension is placed in the border's region and two-thirds of the grooves' extension is placed in the remaining wall region 12 that range from the border 16 to the bottom area 11.

A portion capsule according to the invention is shown as sectional view along the portion capsule's extension regarding its height in **figure 21**, i.e. the section's plane is perpendicular to the membrane's main plane. **Figure 22** also shows a portion capsule according to the invention in a sectional view portraying the sectional plane, which is parallel to the membrane's main plane. It is noticeable that the interior of the portion capsule's cavity is shown in figure 21. The portion capsule's material or the base element's material is so thin that the implementation of grooves at the exterior shown in figure 19 leads to corresponding convexities and impressions at the interior. Figure 22 particularly illustrates the gearwheel shaped contour resulting from insertion of grooves in the portion capsule's wall region.

Claims:

1. Portion capsule for producing a beverage, comprising a base element having a cavity in which a beverage raw material is provided and which is closed by a membrane fastened to the base element, and the base element comprising a flange, wherein the flange has an identifier in order to individualize the respective portion capsule, **characterized in that** the identifier is a gearwheel or a gearwheel's section, which is placed at the outer circumference of the flange.

2. Portion capsule according to claim 1, **characterized in that** the teeth of the gearwheel or the gearwheel's segment are provided to be shaped substantially like a triangle, rectangle, quadrate or a wave.

3. Portion capsule according to claim 1, **characterized in that** a sealing surface is provided at the flange.

4. Portion capsule according to claim 1 **, characterized in that** the identifier is provided in the membrane.

5. Portion capsule according to claim 4, **characterized in that** the membrane's outer area has means for fit locking.

6. Portion capsule according to claim 1, **characterized in that** a filter element, which divides the cavity into a first region for accommodating the beverage raw material and a second region for accommodating a beverage extract, is arranged within the cavity.

7. Portion capsule according to claim 6, **characterized in that** the filter element is made of a non-woven material.

8. Portion capsule according to claim 1 for use in preparing a hot beverage.

9. Portion capsule according to claim 4, **characterized in that** the membrane's outer area has a gearwheel.

PORTION CAPSULE HAVING AN IDENTIFIER

Abstract

A portion capsule for producing a beverage includes a base element having a cavity in which a beverage raw material is provided and which is closed by a membrane fastened to the base element.

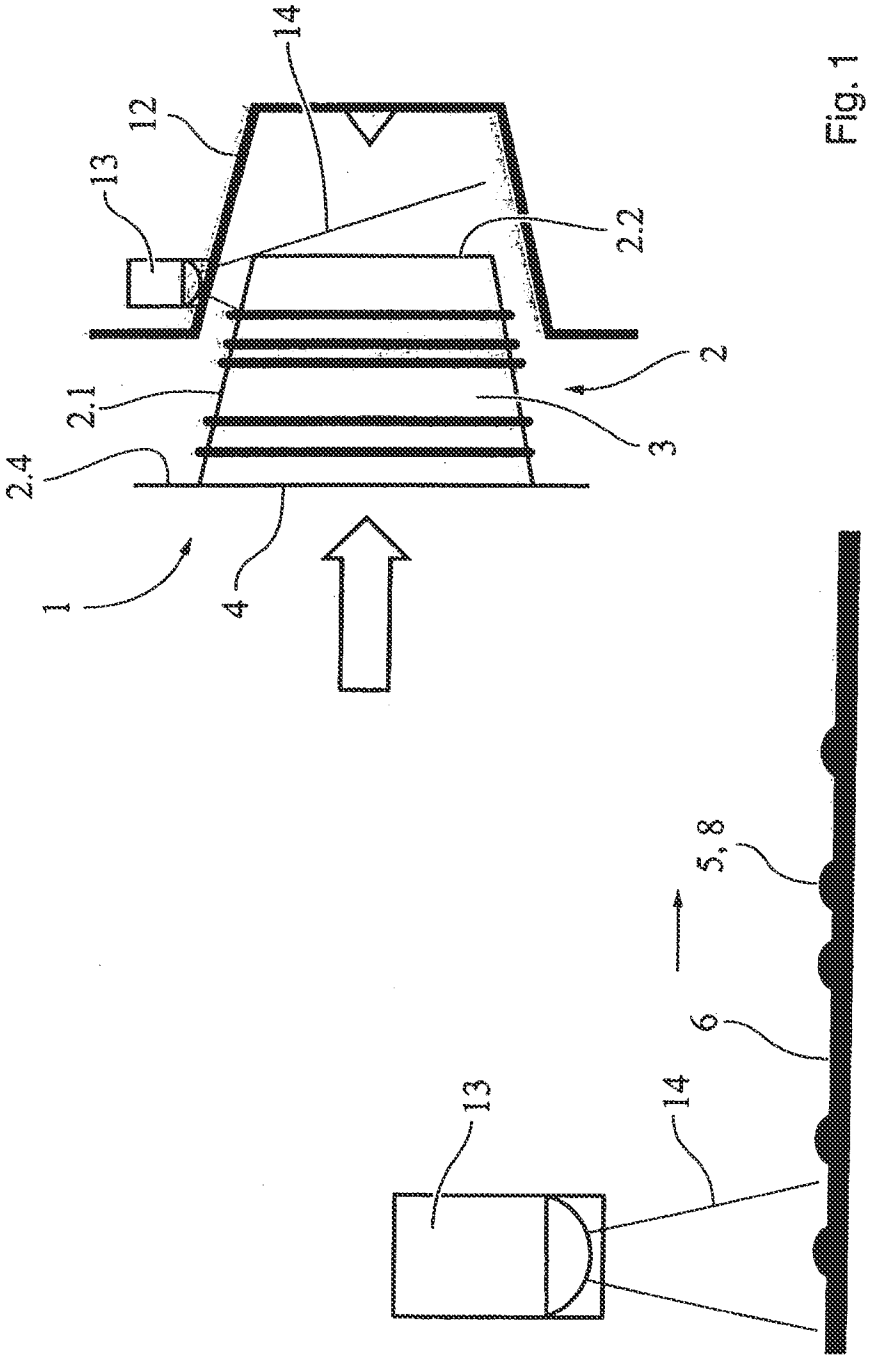

Fig. 1

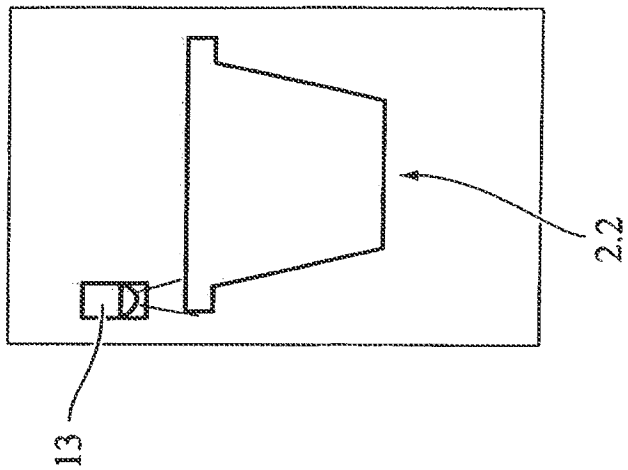

Fig. 2

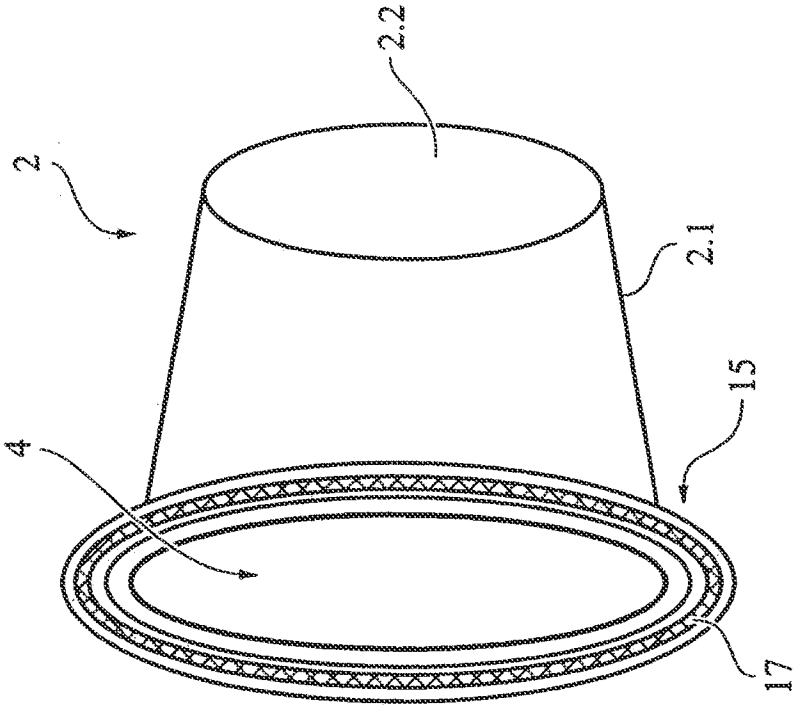

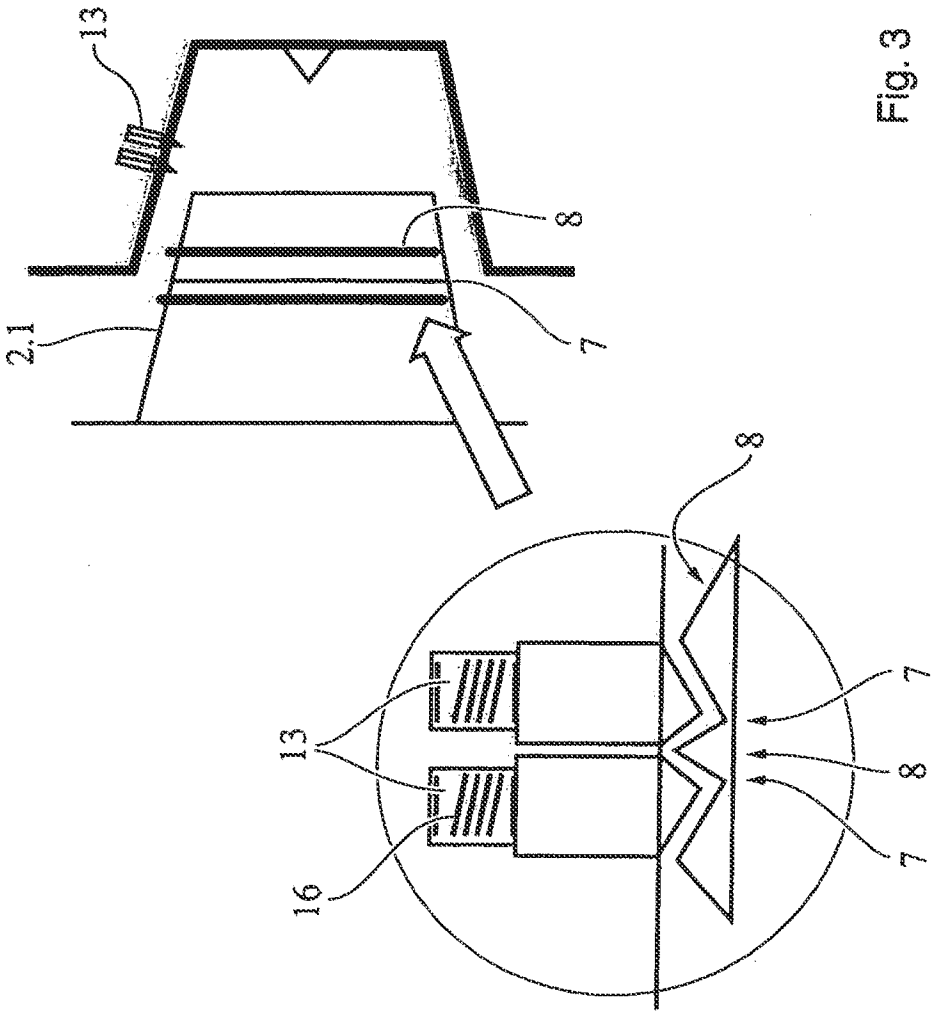

Fig. 3

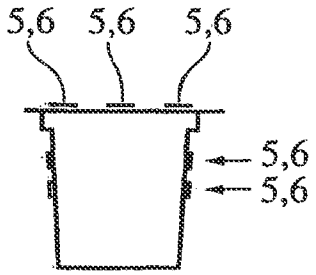

Fig. 4

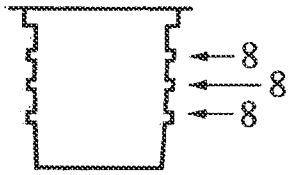

Fig. 5

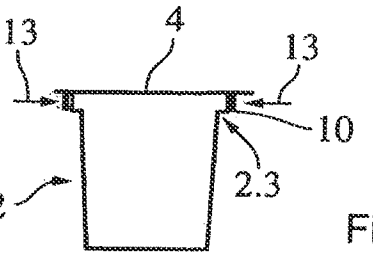

Fig. 6

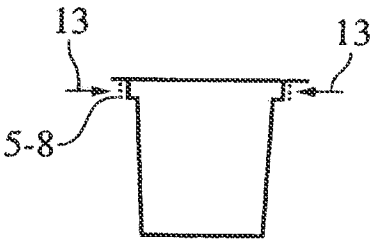

Fig. 7

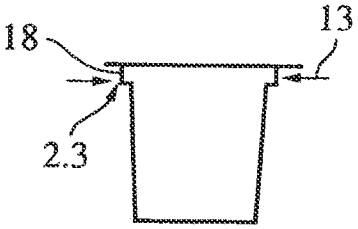

Fig. 8

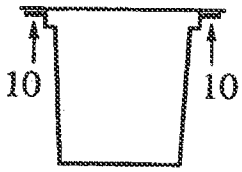

Fig. 9

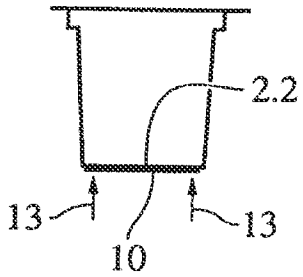

Fig. 10

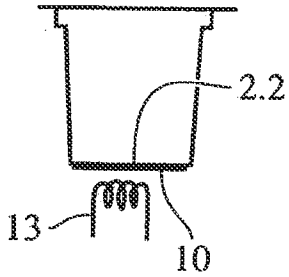

Fig. 11

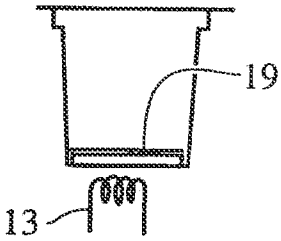

Fig. 12

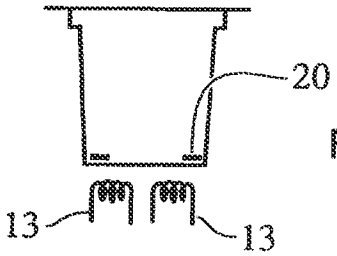

Fig. 13

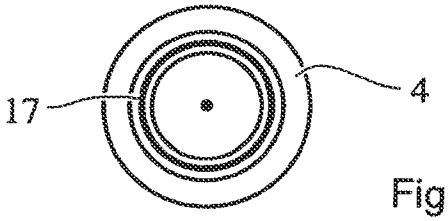

Fig. 14

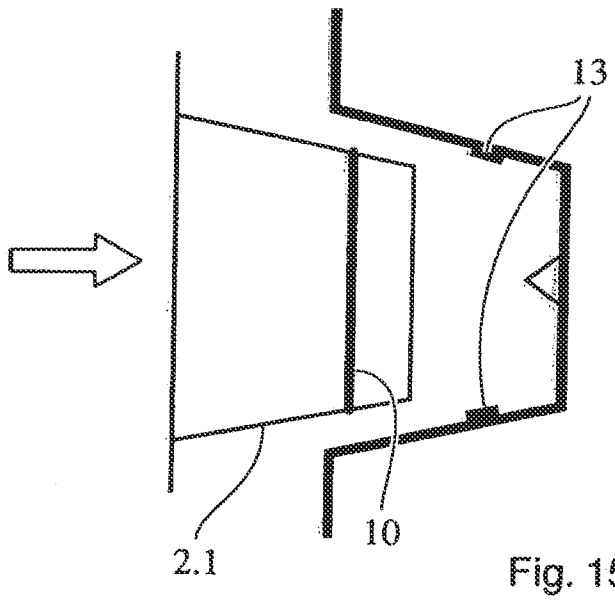

Fig. 15

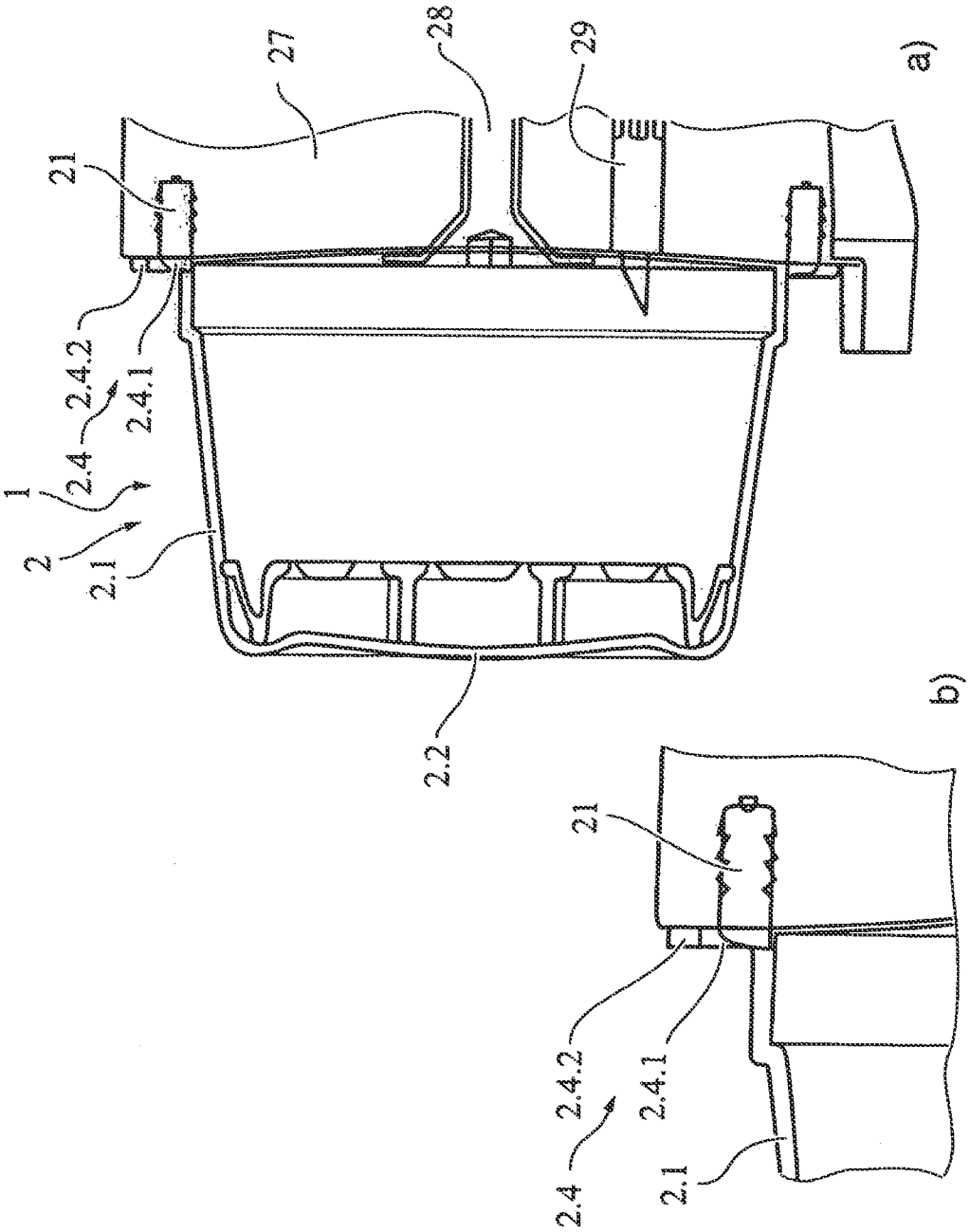

Fig. 16

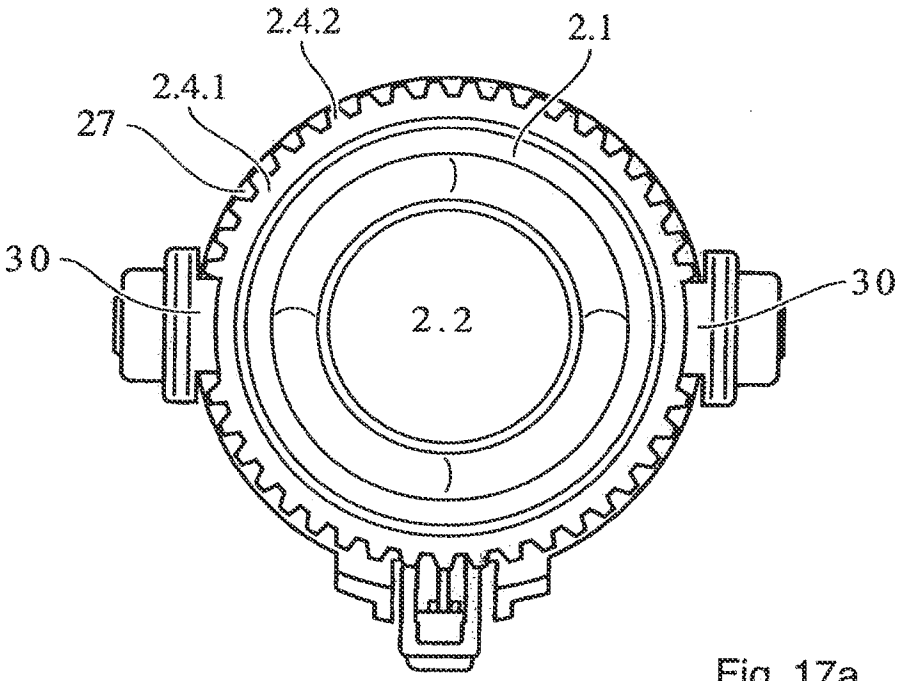

Fig. 17a

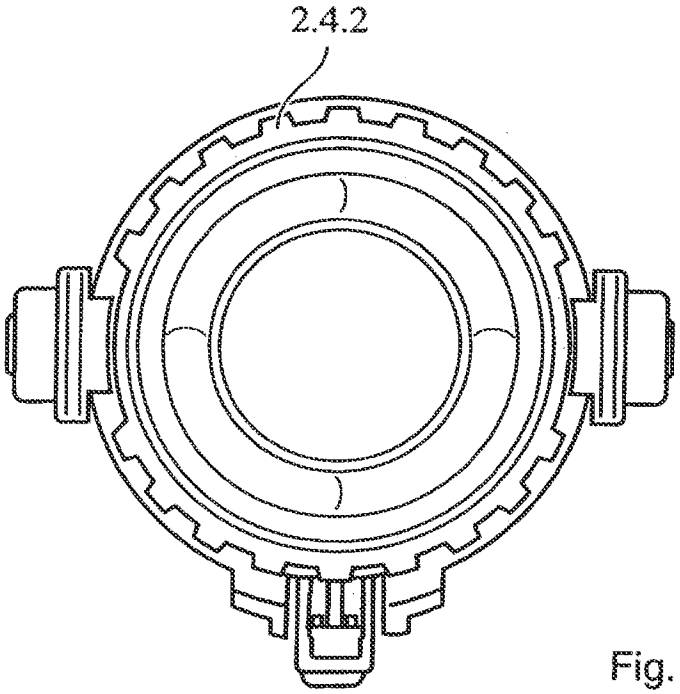

Fig. 17b

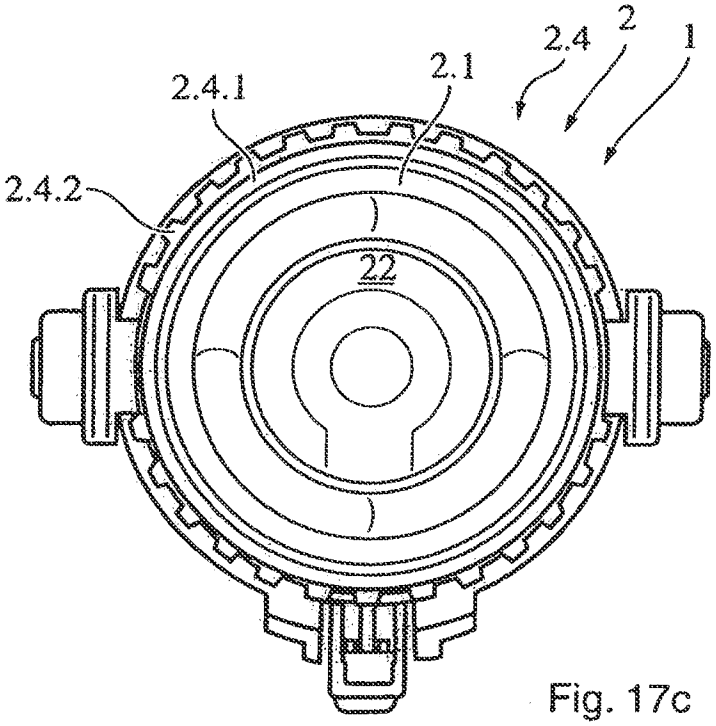

Fig. 17c

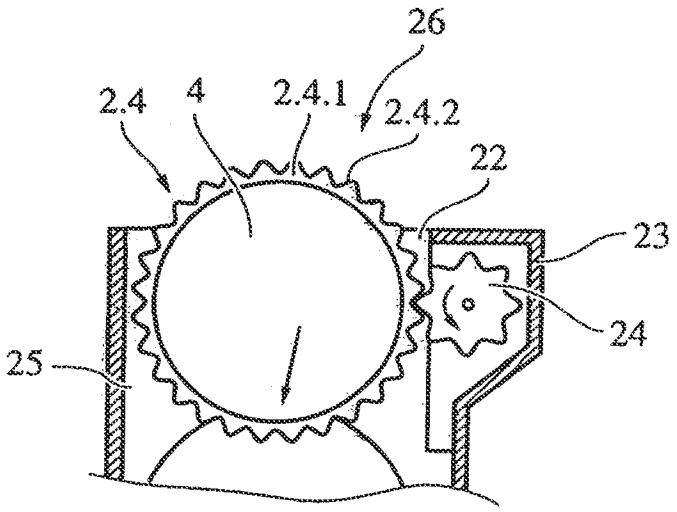

Fig. 18

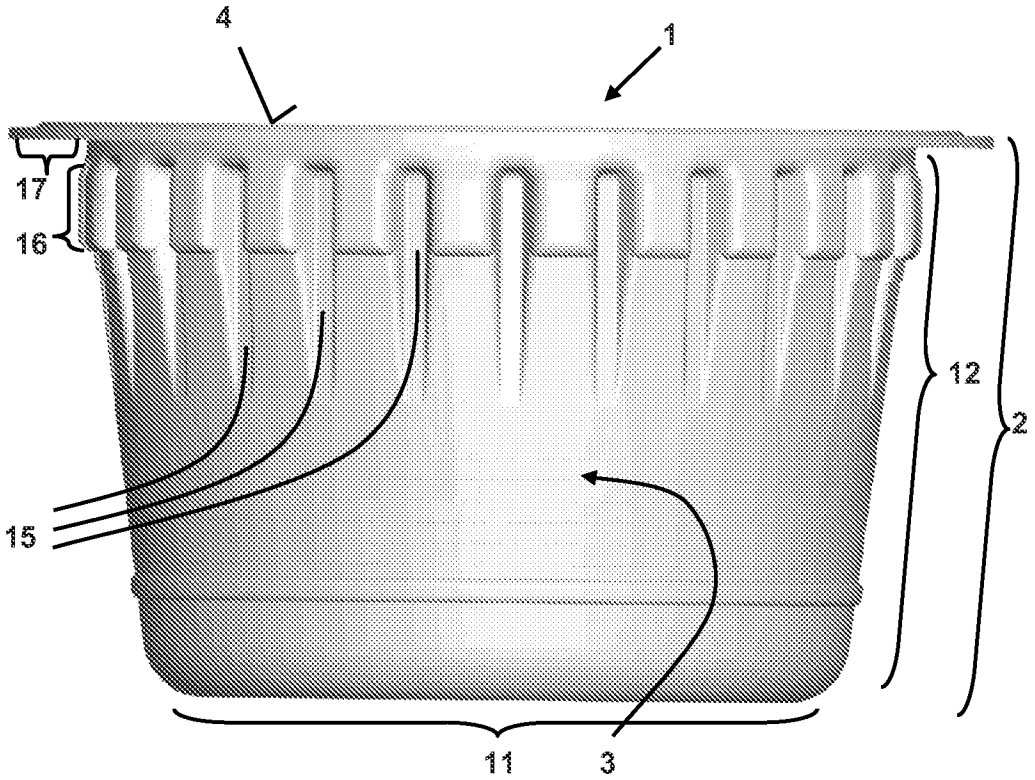

Fig. 19

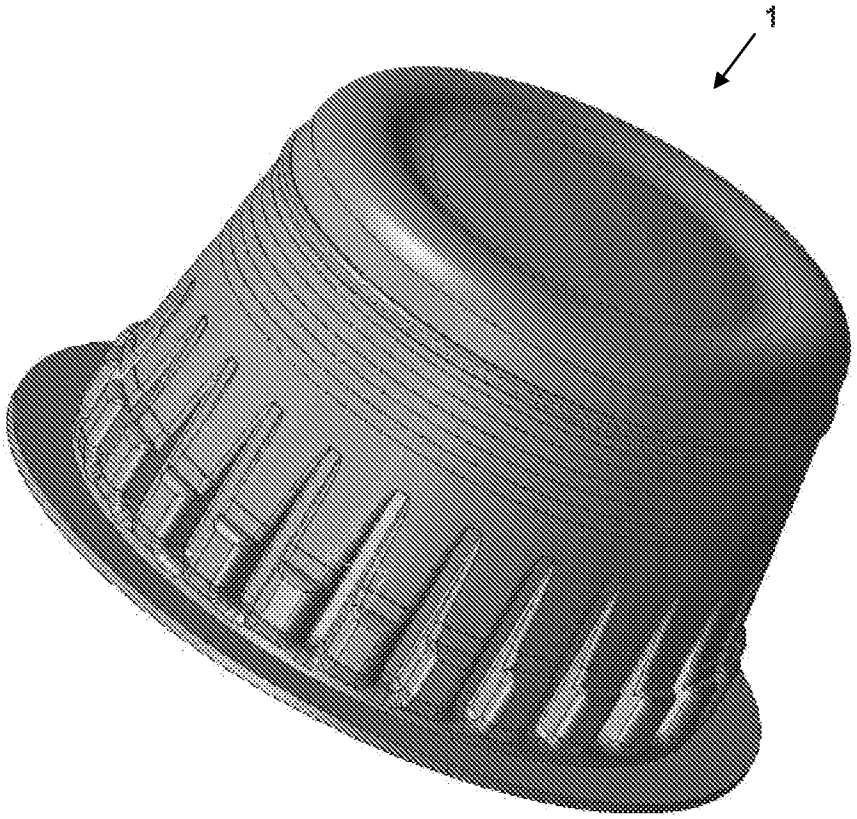

Fig. 20

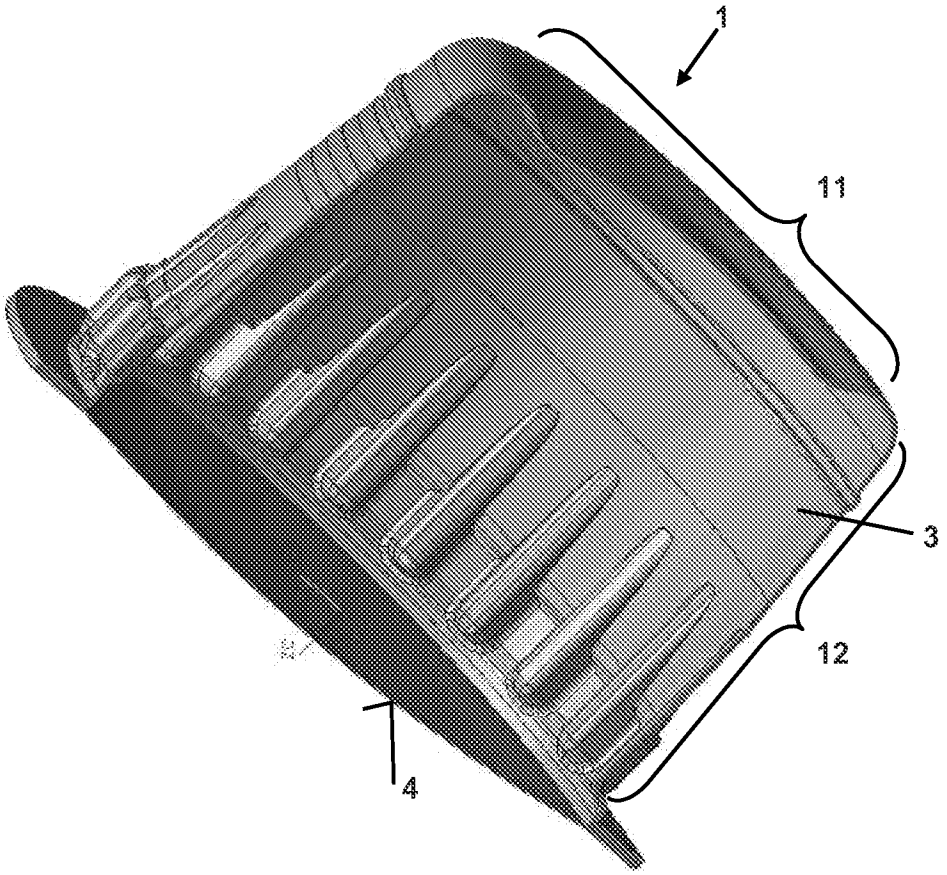

Fig. 21

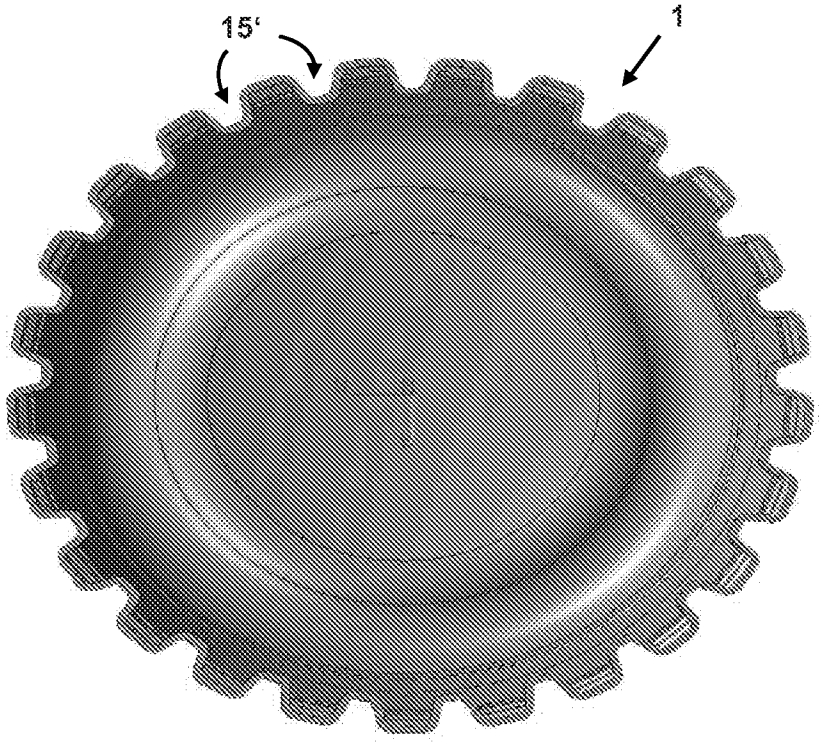

Fig. 22

Under the Paperwork Reduction Act of 1995, no persons are required to respond to a collection of information unless it contains a valid OMB control number.

Application Data Sheet 37 CFR 1.76	Attorney Docket Number	26571-0030-C1
	Application Number	
Title of Invention	PORTION CAPSULE HAVING AN IDENTIFIER	

The application data sheet is part of the provisional or nonprovisional application for which it is being submitted. The following form contains the bibliographic data arranged in a format specified by the United States Patent and Trademark Office as outlined in 37 CFR 1.76.
This document may be completed electronically and submitted to the Office in electronic format using the Electronic Filing System (EFS) or the document may be printed and included in a paper filed application.

Secrecy Order 37 CFR 5.2

☐ Portions or all of the application associated with this Application Data Sheet may fall under a Secrecy Order pursuant to 37 CFR 5.2 (Paper filers only. Applications that fall under Secrecy Order may not be filed electronically.)

Inventor Information:

Inventor 1 Remove

Legal Name

Prefix	Given Name	Middle Name	Family Name	Suffix
	Marc		KRÜGER	

Residence Information (Select One) ○ US Residency ◉ Non US Residency ○ Active US Military Service

City	Bergisch-Gladbach	Country of Residence i	DE

Mailing Address of Inventor:

Address 1	Zaunkönigweg 1		
Address 2			
City	Bergisch-Gladbach	**State/Province**	
Postal Code	51467	**Country** i	DE

All Inventors Must Be Listed - Additional Inventor Information blocks may be generated within this form by selecting the **Add** button. Add

Correspondence Information:

Enter either Customer Number or complete the Correspondence Information section below.
For further information see 37 CFR 1.33(a).

☐ **An Address is being provided for the correspondence Information of this application.**

Customer Number	26587		
Email Address	patents@mwn.com	Add Email	Remove Email

Under the Paperwork Reduction Act of 1995, no persons are required to respond to a collection of information unless it contains a valid OMB control number.

Application Data Sheet 37 CFR 1.76	Attorney Docket Number	26571-0030-C1
	Application Number	
Title of Invention	PORTION CAPSULE HAVING AN IDENTIFIER	

Application Information:

Title of the Invention	PORTION CAPSULE HAVING AN IDENTIFIER		
Attorney Docket Number	26571-0030-C1	**Small Entity Status Claimed** ☐	
Application Type	Nonprovisional		
Subject Matter	Utility		
Suggested Class (if any)		**Sub Class (if any)**	
Suggested Technology Center (if any)			
Total Number of Drawing Sheets (if any)	12	**Suggested Figure for Publication (if any)**	1

Publication Information:

☐ Request Early Publication (Fee required at time of Request 37 CFR 1.219)

☐ **Request Not to Publish.** I hereby request that the attached application not be published under 35 U.S.C. 122(b) and certify that the invention disclosed in the attached application **has not and will not** be the subject of an application filed in another country, or under a multilateral international agreement, that requires publication at eighteen months after filing.

Representative Information:

Representative information should be provided for all practitioners having a power of attorney in the application. Providing this information in the Application Data Sheet does not constitute a power of attorney in the application (see 37 CFR 1.32).
Either enter Customer Number or complete the Representative Name section below. If both sections are completed the customer Number will be used for the Representative Information during processing.

Please Select One:	◉ Customer Number	○ US Patent Practitioner	○ Limited Recognition (37 CFR 11.9)
Customer Number	26587		

Domestic Benefit/National Stage Information:

This section allows for the applicant to either claim benefit under 35 U.S.C. 119(e), 120, 121, or 365(c) or indicate National Stage entry from a PCT application. Providing this information in the application data sheet constitutes the specific reference required by 35 U.S.C. 119(e) or 120, and 37 CFR 1.78.

Prior Application Status	Pending		Remove
Application Number	Continuity Type	Prior Application Number	Filing Date (YYYY-MM-DD)
	Continuation of	PCT/EP2011/003677	2011-07-22

Additional Domestic Benefit/National Stage Data may be generated within this form by selecting the **Add** button. Add

Foreign Priority Information:

Under the Paperwork Reduction Act of 1995, no persons are required to respond to a collection of information unless it contains a valid OMB control number.

Application Data Sheet 37 CFR 1.76	Attorney Docket Number	26571-0030-C1
	Application Number	
Title of Invention	PORTION CAPSULE HAVING AN IDENTIFIER	

This section allows for the applicant to claim benefit of foreign priority and to identify any prior foreign application for which priority is not claimed. Providing this information in the application data sheet constitutes the claim for priority as required by 35 U.S.C. 119(b) and 37 CFR 1.55(a).

Remove

Application Number	Country i	Filing Date (YYYY-MM-DD)	Priority Claimed
10 2011 010 534.4	DE	2011-02-07	◉ Yes ◯ No

Remove

Application Number	Country i	Filing Date (YYYY-MM-DD)	Priority Claimed
10 2010 044 251.8	DE	2010-09-02	◉ Yes ◯ No

Remove

Application Number	Country i	Filing Date (YYYY-MM-DD)	Priority Claimed
10 2010 031 988.0	DE	2010-07-22	◉ Yes ◯ No

Additional Foreign Priority Data may be generated within this form by selecting the **Add** button. Add

Authorization to Permit Access:

☒ Authorization to Permit Access to the Instant Application by the Participating Offices

If checked, the undersigned hereby grants the USPTO authority to provide the European Patent Office (EPO), the Japan Patent Office (JPO), the Korean Intellectual Property Office (KIPO), the World Intellectual Property Office (WIPO), and any other intellectual property offices in which a foreign application claiming priority to the instant patent application is filed access to the instant patent application. See 37 CFR 1.14(c) and (h). This box should not be checked if the applicant does not wish the EPO, JPO, KIPO, WIPO, or other intellectual property office in which a foreign application claiming priority to the instant patent application is filed to have access to the instant patent application.

In accordance with 37 CFR 1.14(h)(3), access will be provided to a copy of the instant patent application with respect to: 1) the instant patent application-as-filed; 2) any foreign application to which the instant patent application claims priority under 35 U.S.C. 119(a)-(d) if a copy of the foreign application that satisfies the certified copy requirement of 37 CFR 1.55 has been filed in the instant patent application; and 3) any U.S. application-as-filed from which benefit is sought in the instant patent application.

In accordance with 37 CFR 1.14(c), access may be provided to information concerning the date of filing this Authorization.

Applicant Information:

Providing assignment information in this section does not substitute for compliance with any requirement of part 3 of Title 37 of CFR to have an assignment recorded by the Office.

Under the Paperwork Reduction Act of 1995, no persons are required to respond to a collection of information unless it contains a valid OMB control number.

Application Data Sheet 37 CFR 1.76	Attorney Docket Number	26571-0030-C1
	Application Number	
Title of Invention	PORTION CAPSULE HAVING AN IDENTIFIER	

Applicant 1 Remove

If the applicant is the inventor (or the remaining joint inventor or inventors under 37 CFR 1.45), this section should not be completed. The information to be provided in this section is the name and address of the legal representative who is the applicant under 37 CFR 1.43; or the name and address of the assignee, person to whom the inventor is under an obligation to assign the invention, or person who otherwise shows sufficient proprietary interest in the matter who is the applicant under 37 CFR 1.46. If the applicant is an applicant under 37 CFR 1.46 (assignee, person to whom the inventor is obligated to assign, or person who otherwise shows sufficient proprietary interest) together with one or more joint inventors, then the joint inventor or inventors who are also the applicant should be identified in this section.

Clear

- (●) Assignee
- ( ) Legal Representative under 35 U.S.C. 117
- ( ) Joint Inventor
- ( ) Person to whom the inventor is obligated to assign.
- ( ) Person who shows sufficient proprietary interest

If applicant is the legal representative, indicate the authority to file the patent application, the inventor is:

Name of the Deceased or Legally Incapacitated Inventor :

If the Applicant is an Organization check here. [X]

Organization Name	K-FEE SYSTEM GMBH		
Mailing Address Information:			
Address 1	Senefelderstraße 44		
Address 2			
City	Bergisch Gladbach	**State/Province**	
Country i	DE	Postal Code	51469
Phone Number		Fax Number	
Email Address			

Additional Applicant Data may be generated within this form by selecting the Add button. Add

Non-Applicant Assignee Information:

Providing assignment information in this section does not subsitute for compliance with any requirement of part 3 of Title 37 of CFR to have an assignment recorded by the Office.

Assignee 1

Complete this section only if non-applicant assignee information is desired to be included on the patent application publication in accordance with 37 CFR 1.215(b). Do not include in this section an applicant under 37 CFR 1.46 (assignee, person to whom the inventor is obligated to assign, or person who otherwise shows sufficient proprietary interest), as the patent application publication will include the name of the applicant(s).

Remove

If the Assignee is an Organization check here. [ ]

Under the Paperwork Reduction Act of 1995, no persons are required to respond to a collection of information unless it contains a valid OMB control number.

Application Data Sheet 37 CFR 1.76	Attorney Docket Number	26571-0030-C1
	Application Number	
Title of Invention	PORTION CAPSULE HAVING AN IDENTIFIER	

Prefix	**Given Name**	Middle Name	**Family Name**	Suffix

Mailing Address Information:

Address 1			
Address 2			
City		**State/Province**	
Country i		Postal Code	
Phone Number		Fax Number	
Email Address			

Additional Assignee Data may be generated within this form by selecting the Add button. Add

Signature:

Remove

NOTE: This form must be signed in accordance with 37 CFR 1.33. See 37 CFR 1.4 for signature requirements and certifications

Signature	/Brian T. Sattizahn/			Date (YYYY-MM-DD)	2013-01-18
First Name	Brian T.	Last Name	Sattizahn	Registration Number	46401

Additional Signature may be generated within this form by selecting the Add button. Add

This collection of information is required by 37 CFR 1.76. The information is required to obtain or retain a benefit by the public which is to file (and by the USPTO to process) an application. Confidentiality is governed by 35 U.S.C. 122 and 37 CFR 1.14. This collection is estimated to take 23 minutes to complete, including gathering, preparing, and submitting the completed application data sheet form to the USPTO. Time will vary depending upon the individual case. Any comments on the amount of time you require to complete this form and/or suggestions for reducing this burden, should be sent to the Chief Information Officer, U.S. Patent and Trademark Office, U.S. Department of Commerce, P.O. Box 1450, Alexandria, VA 22313-1450. DO NOT SEND FEES OR COMPLETED FORMS TO THIS ADDRESS. **SEND TO: Commissioner for Patents, P.O. Box 1450, Alexandria, VA 22313-1450.**

Privacy Act Statement

The Privacy Act of 1974 (P.L. 93-579) requires that you be given certain information in connection with your submission of the attached form related to a patent application or patent. Accordingly, pursuant to the requirements of the Act, please be advised that: (1) the general authority for the collection of this information is 35 U.S.C. 2(b)(2); (2) furnishing of the information solicited is voluntary; and (3) the principal purpose for which the information is used by the U.S. Patent and Trademark Office is to process and/or examine your submission related to a patent application or patent. If you do not furnish the requested information, the U.S. Patent and Trademark Office may not be able to process and/or examine your submission, which may result in termination of proceedings or abandonment of the application or expiration of the patent.

The information provided by you in this form will be subject to the following routine uses:

1. The information on this form will be treated confidentially to the extent allowed under the Freedom of Information Act (5 U.S.C. 552) and the Privacy Act (5 U.S.C. 552a). Records from this system of records may be disclosed to the Department of Justice to determine whether the Freedom of Information Act requires disclosure of these records.

2. A record from this system of records may be disclosed, as a routine use, in the course of presenting evidence to a court, magistrate, or administrative tribunal, including disclosures to opposing counsel in the course of settlement negotiations.

3. A record in this system of records may be disclosed, as a routine use, to a Member of Congress submitting a request involving an individual, to whom the record pertains, when the individual has requested assistance from the Member with respect to the subject matter of the record.

4. A record in this system of records may be disclosed, as a routine use, to a contractor of the Agency having need for the information in order to perform a contract. Recipients of information shall be required to comply with the requirements of the Privacy Act of 1974, as amended, pursuant to 5 U.S.C. 552a(m).

5. A record related to an International Application filed under the Patent Cooperation Treaty in this system of records may be disclosed, as a routine use, to the International Bureau of the World Intellectual Property Organization, pursuant to the Patent Cooperation Treaty.

6. A record in this system of records may be disclosed, as a routine use, to another federal agency for purposes of National Security review (35 U.S.C. 181) and for review pursuant to the Atomic Energy Act (42 U.S.C. 218(c)).

7. A record from this system of records may be disclosed, as a routine use, to the Administrator, General Services, or his/her designee, during an inspection of records conducted by GSA as part of that agency's responsibility to recommend improvements in records management practices and programs, under authority of 44 U.S.C. 2904 and 2906. Such disclosure shall be made in accordance with the GSA regulations governing inspection of records for this purpose, and any other relevant (i.e., GSA or Commerce) directive. Such disclosure shall not be used to make determinations about individuals.

8. A record from this system of records may be disclosed, as a routine use, to the public after either publication of the application pursuant to 35 U.S.C. 122(b) or issuance of a patent pursuant to 35 U.S.C. 151. Further, a record may be disclosed, subject to the limitations of 37 CFR 1.14, as a routine use, to the public if the record was filed in an application which became abandoned or in which the proceedings were terminated and which application is referenced by either a published application, an application open to public inspections or an issued patent.

9. A record from this system of records may be disclosed, as a routine use, to a Federal, State, or local law enforcement agency, if the USPTO becomes aware of a violation or potential violation of law or regulation.

SCORE Placeholder Sheet for IFW Content

Application Number: 13744623 Document Date: 01/18/2013

The presence of this form in the IFW record indicates that the following document type was received in electronic format on the date identified above. This content is stored in the SCORE database.

- Drawings – Other than Black and White Line Drawings

Since this was an electronic submission, there is no physical artifact folder, no artifact folder is recorded in PALM, and no paper documents or physical media exist. The TIFF images in the IFW record were created from the original documents that are stored in SCORE.

To access the documents in the SCORE database, refer to instructions developed by SIRA.

At the time of document entry (noted above):

- Examiners may access SCORE content via the eDAN interface.
- Other USPTO employees can bookmark the current SCORE URL (http://es/ScoreAccessWeb/).
- External customers may access SCORE content via the Public and Private PAIR interfaces.

Form Revision Date: February 8, 2006

PATENT APPLICATION FEE DETERMINATION RECORD Substitute for Form PTO-875	Application or Docket Number 13/744,623

APPLICATION AS FILED - PART I

FOR	(Column 1) NUMBER FILED	(Column 2) NUMBER EXTRA	SMALL ENTITY RATE($)	SMALL ENTITY FEE($)	OR	OTHER THAN SMALL ENTITY RATE($)	OTHER THAN SMALL ENTITY FEE($)
BASIC FEE (37 CFR 1.16(a), (b), or (c))	N/A	N/A	N/A			N/A	390
SEARCH FEE (37 CFR 1.16(k), (i), or (m))	N/A	N/A	N/A			N/A	620
EXAMINATION FEE (37 CFR 1.16(o), (p), or (q))	N/A	N/A	N/A			N/A	250
TOTAL CLAIMS (37 CFR 1.16(i))	9 minus 20 =	*			OR	x 62 =	0.00
INDEPENDENT CLAIMS (37 CFR 1.16(h))	1 minus 3 =	*				x 250 =	0.00
APPLICATION SIZE FEE (37 CFR 1.16(s))	If the specification and drawings exceed 100 sheets of paper, the application size fee due is $310 ($155 for small entity) for each additional 50 sheets or fraction thereof. See 35 U.S.C. 41(a)(1)(G) and 37 CFR 1.16(s).						0.00
MULTIPLE DEPENDENT CLAIM PRESENT (37 CFR 1.16(j))							0.00
* If the difference in column 1 is less than zero, enter "0" in column 2.			TOTAL			TOTAL	1260

APPLICATION AS AMENDED - PART II

		(Column 1) CLAIMS REMAINING AFTER AMENDMENT		(Column 2) HIGHEST NUMBER PREVIOUSLY PAID FOR	(Column 3) PRESENT EXTRA	SMALL ENTITY RATE($)	SMALL ENTITY ADDITIONAL FEE($)	OR	OTHER THAN SMALL ENTITY RATE($)	OTHER THAN SMALL ENTITY ADDITIONAL FEE($)
AMENDMENT A	Total (37 CFR 1.16(i))	*	Minus	**	=	x =		OR	x =	
AMENDMENT A	Independent (37 CFR 1.16(h))	*	Minus	***	=	x =		OR	x =	
AMENDMENT A	Application Size Fee (37 CFR 1.16(s))									
AMENDMENT A	FIRST PRESENTATION OF MULTIPLE DEPENDENT CLAIM (37 CFR 1.16(j))							OR		
						TOTAL ADD'L FEE		OR	TOTAL ADD'L FEE	

		(Column 1) CLAIMS REMAINING AFTER AMENDMENT		(Column 2) HIGHEST NUMBER PREVIOUSLY PAID FOR	(Column 3) PRESENT EXTRA	RATE($)	ADDITIONAL FEE($)	OR	RATE($)	ADDITIONAL FEE($)
AMENDMENT B	Total (37 CFR 1.16(i))	*	Minus	**	=	x =		OR	x =	
AMENDMENT B	Independent (37 CFR 1.16(h))	*	Minus	***	=	x =		OR	x =	
AMENDMENT B	Application Size Fee (37 CFR 1.16(s))									
AMENDMENT B	FIRST PRESENTATION OF MULTIPLE DEPENDENT CLAIM (37 CFR 1.16(j))							OR		
						TOTAL ADD'L FEE		OR	TOTAL ADD'L FEE	

* If the entry in column 1 is less than the entry in column 2, write "0" in column 3.
** If the "Highest Number Previously Paid For" IN THIS SPACE is less than 20, enter "20".
*** If the "Highest Number Previously Paid For" IN THIS SPACE is less than 3, enter "3".
The "Highest Number Previously Paid For" (Total or Independent) is the highest found in the appropriate box in column 1.

UNITED STATES PATENT AND TRADEMARK OFFICE

UNITED STATES DEPARTMENT OF COMMERCE
United States Patent and Trademark Office
Address: COMMISSIONER FOR PATENTS
P.O. Box 1450
Alexandria, Virginia 22313-1450
www.uspto.gov

APPLICATION NUMBER	FILING or 371(c) DATE	GRP ART UNIT	FIL FEE REC'D	ATTY.DOCKET.NO	TOT CLAIMS	IND CLAIMS
13/744,623	01/18/2013	3742	1260	26571-0030-C1	9	1

CONFIRMATION NO. 8894

26587
MCNEES WALLACE & NURICK LLC
100 PINE STREET
P.O. BOX 1166
HARRISBURG, PA 17108-1166

FILING RECEIPT

OC000000059222345

Date Mailed: 02/13/2013

Receipt is acknowledged of this non-provisional patent application. The application will be taken up for examination in due course. Applicant will be notified as to the results of the examination. Any correspondence concerning the application must include the following identification information: the U.S. APPLICATION NUMBER, FILING DATE, NAME OF APPLICANT, and TITLE OF INVENTION. Fees transmitted by check or draft are subject to collection. Please verify the accuracy of the data presented on this receipt. **If an error is noted on this Filing Receipt, please submit a written request for a Filing Receipt Correction. Please provide a copy of this Filing Receipt with the changes noted thereon. If you received a "Notice to File Missing Parts" for this application, please submit any corrections to this Filing Receipt with your reply to the Notice. When the USPTO processes the reply to the Notice, the USPTO will generate another Filing Receipt incorporating the requested corrections**

Inventor(s)
Marc KRÜGER, Bergisch-Gladbach, GERMANY;

Applicant(s)
K-FEE SYSTEMS GMBH, Bergisch Gladbach, GERMANY

Assignment For Published Patent Application
K-FEE SYSTEM GMBH, Bergisch Gladbach, GERMANY

Power of Attorney: None

Domestic Priority data as claimed by applicant
This application is a CON of PCT/EP2011/003677 07/22/2011

Foreign Applications (You may be eligible to benefit from the **Patent Prosecution Highway** program at the USPTO. Please see http://www.uspto.gov for more information.)
GERMANY 10 2011 010 534.4 02/07/2011
GERMANY 10 2010 044 251.8 09/02/2010
GERMANY 10 2010 031 988.0 07/22/2010

Permission to Access - A proper **Authorization to Permit Access to Application by Participating Offices** (PTO/SB/39 or its equivalent) has been received by the USPTO.

If Required, Foreign Filing License Granted: 02/09/2013
The country code and number of your priority application, to be used for filing abroad under the Paris Convention, is **US 13/744,623**
Projected Publication Date: 05/23/2013
Non-Publication Request: No

Early Publication Request: No
Title

PORTION CAPSULE HAVING AN IDENTIFIER

Preliminary Class

099

PROTECTING YOUR INVENTION OUTSIDE THE UNITED STATES

Since the rights granted by a U.S. patent extend only throughout the territory of the United States and have no effect in a foreign country, an inventor who wishes patent protection in another country must apply for a patent in a specific country or in regional patent offices. Applicants may wish to consider the filing of an international application under the Patent Cooperation Treaty (PCT). An international (PCT) application generally has the same effect as a regular national patent application in each PCT-member country. The PCT process **simplifies** the filing of patent applications on the same invention in member countries, but **does not result** in a grant of "an international patent" and does not eliminate the need of applicants to file additional documents and fees in countries where patent protection is desired.

Almost every country has its own patent law, and a person desiring a patent in a particular country must make an application for patent in that country in accordance with its particular laws. Since the laws of many countries differ in various respects from the patent law of the United States, applicants are advised to seek guidance from specific foreign countries to ensure that patent rights are not lost prematurely.

Applicants also are advised that in the case of inventions made in the United States, the Director of the USPTO must issue a license before applicants can apply for a patent in a foreign country. The filing of a U.S. patent application serves as a request for a foreign filing license. The application's filing receipt contains further information and guidance as to the status of applicant's license for foreign filing.

Applicants may wish to consult the USPTO booklet, "General Information Concerning Patents" (specifically, the section entitled "Treaties and Foreign Patents") for more information on timeframes and deadlines for filing foreign patent applications. The guide is available either by contacting the USPTO Contact Center at 800-786-9199, or it can be viewed on the USPTO website at http://www.uspto.gov/web/offices/pac/doc/general/index.html.

For information on preventing theft of your intellectual property (patents, trademarks and copyrights), you may wish to consult the U.S. Government website, http://www.stopfakes.gov. Part of a Department of Commerce initiative, this website includes self-help "toolkits" giving innovators guidance on how to protect intellectual property in specific countries such as China, Korea and Mexico. For questions regarding patent enforcement issues, applicants may call the U.S. Government hotline at 1-866-999-HALT (1-866-999-4158).

LICENSE FOR FOREIGN FILING UNDER

Title 35, United States Code, Section 184

Title 37, Code of Federal Regulations, 5.11 & 5.15

GRANTED

The applicant has been granted a license under 35 U.S.C. 184, if the phrase "IF REQUIRED, FOREIGN FILING LICENSE GRANTED" followed by a date appears on this form. Such licenses are issued in all applications where

the conditions for issuance of a license have been met, regardless of whether or not a license may be required as set forth in 37 CFR 5.15. The scope and limitations of this license are set forth in 37 CFR 5.15(a) unless an earlier license has been issued under 37 CFR 5.15(b). The license is subject to revocation upon written notification. The date indicated is the effective date of the license, unless an earlier license of similar scope has been granted under 37 CFR 5.13 or 5.14.

This license is to be retained by the licensee and may be used at any time on or after the effective date thereof unless it is revoked. This license is automatically transferred to any related applications(s) filed under 37 CFR 1.53(d). This license is not retroactive.

The grant of a license does not in any way lessen the responsibility of a licensee for the security of the subject matter as imposed by any Government contract or the provisions of existing laws relating to espionage and the national security or the export of technical data. Licensees should apprise themselves of current regulations especially with respect to certain countries, of other agencies, particularly the Office of Defense Trade Controls, Department of State (with respect to Arms, Munitions and Implements of War (22 CFR 121-128)); the Bureau of Industry and Security, Department of Commerce (15 CFR parts 730-774); the Office of Foreign AssetsControl, Department of Treasury (31 CFR Parts 500+) and the Department of Energy.

NOT GRANTED

No license under 35 U.S.C. 184 has been granted at this time, if the phrase "IF REQUIRED, FOREIGN FILING LICENSE GRANTED" DOES NOT appear on this form. Applicant may still petition for a license under 37 CFR 5.12, if a license is desired before the expiration of 6 months from the filing date of the application. If 6 months has lapsed from the filing date of this application and the licensee has not received any indication of a secrecy order under 35 U.S.C. 181, the licensee may foreign file the application pursuant to 37 CFR 5.15(b).

SelectUSA

The United States represents the largest, most dynamic marketplace in the world and is an unparalleled location for business investment, innovation, and commercialization of new technologies. The U.S. offers tremendous resources and advantages for those who invest and manufacture goods here. Through SelectUSA, our nation works to promote and facilitate business investment. SelectUSA provides information assistance to the international investor community; serves as an ombudsman for existing and potential investors; advocates on behalf of U.S. cities, states, and regions competing for global investment; and counsels U.S. economic development organizations on investment attraction best practices. To learn more about why the United States is the best country in the world to develop technology, manufacture products, deliver services, and grow your business, visit http://www.SelectUSA.gov or call +1-202-482-6800.

UNITED STATES PATENT AND TRADEMARK OFFICE

UNITED STATES DEPARTMENT OF COMMERCE
United States Patent and Trademark Office
Address: COMMISSIONER FOR PATENTS
P.O. Box 1450
Alexandria, Virginia 22313-1450
www.uspto.gov

APPLICATION NO.	FILING DATE	FIRST NAMED INVENTOR	ATTORNEY DOCKET NO.	CONFIRMATION NO.
13/744,623	01/18/2013	Marc KRÜGER	26571-0030-C1	8894

26587 7590 05/22/2013
MCNEES WALLACE & NURICK LLC
100 PINE STREET
P.O. BOX 1166
HARRISBURG, PA 17108-1166

EXAMINER
PROPSTER, DANIEL M

ART UNIT	PAPER NUMBER
1792	

MAIL DATE	DELIVERY MODE
05/22/2013	PAPER

Please find below and/or attached an Office communication concerning this application or proceeding.

The time period for reply, if any, is set in the attached communication.

Office Action Summary	Application No. 13/744,623	Applicant(s) KRÜGER ET AL.	
	Examiner Daniel M. Propster	Art Unit 1792	AIA (First Inventor to File) Status No

-- The MAILING DATE of this communication appears on the cover sheet with the correspondence address --

Period for Reply

A SHORTENED STATUTORY PERIOD FOR REPLY IS SET TO EXPIRE 3 MONTH(S) OR THIRTY (30) DAYS, WHICHEVER IS LONGER, FROM THE MAILING DATE OF THIS COMMUNICATION.

- Extensions of time may be available under the provisions of 37 CFR 1.136(a). In no event, however, may a reply be timely filed after SIX (6) MONTHS from the mailing date of this communication.
- If NO period for reply is specified above, the maximum statutory period will apply and will expire SIX (6) MONTHS from the mailing date of this communication.
- Failure to reply within the set or extended period for reply will, by statute, cause the application to become ABANDONED (35 U.S.C. § 133). Any reply received by the Office later than three months after the mailing date of this communication, even if timely filed, may reduce any earned patent term adjustment. See 37 CFR 1.704(b).

Status

1)☒ Responsive to communication(s) filed on *18 January 2013*.

☐ A declaration(s)/affidavit(s) under **37 CFR 1.130(b)** was/were filed on _____.

2a)☐ This action is **FINAL**. 2b)☒ This action is non-final.

3)☐ An election was made by the applicant in response to a restriction requirement set forth during the interview on _____; the restriction requirement and election have been incorporated into this action.

4)☐ Since this application is in condition for allowance except for formal matters, prosecution as to the merits is closed in accordance with the practice under *Ex parte Quayle*, 1935 C.D. 11, 453 O.G. 213.

Disposition of Claims

5)☒ Claim(s) *1-9* is/are pending in the application.

5a) Of the above claim(s) _____ is/are withdrawn from consideration.

6)☐ Claim(s) _____ is/are allowed.

7)☒ Claim(s) *1-9* is/are rejected.

8)☒ Claim(s) *1-9* is/are objected to.

9)☐ Claim(s) _____ are subject to restriction and/or election requirement.

* If any claims have been determined allowable, you may be eligible to benefit from the **Patent Prosecution Highway** program at a participating intellectual property office for the corresponding application. For more information, please see http://www.uspto.gov/patents/init_events/pph/index.jsp or send an inquiry to PPHfeedback@uspto.gov.

Application Papers

10)☐ The specification is objected to by the Examiner.

11)☒ The drawing(s) filed on *18 January 2013* is/are: a)☒ accepted or b)☐ objected to by the Examiner.

Applicant may not request that any objection to the drawing(s) be held in abeyance. See 37 CFR 1.85(a).

Replacement drawing sheet(s) including the correction is required if the drawing(s) is objected to. See 37 CFR 1.121(d).

Priority under 35 U.S.C. § 119

12)☒ Acknowledgment is made of a claim for foreign priority under 35 U.S.C. § 119(a)-(d) or (f).

Certified copies:

a)☒ All b)☐ Some * c)☐ None of the:

1.☐ Certified copies of the priority documents have been received.

2.☐ Certified copies of the priority documents have been received in Application No. _____.

3.☒ Copies of the certified copies of the priority documents have been received in this National Stage application from the International Bureau (PCT Rule 17.2(a)).

* See the attached detailed Office action for a list of the certified copies not received.

Interim copies:

a)☐ All b)☐ Some c)☐ None of the: Interim copies of the priority documents have been received.

Attachment(s)

1) ☒ Notice of References Cited (PTO-892)

2) ☒ Information Disclosure Statement(s) (PTO/SB/08) Paper No(s)/Mail Date *January 18, 2013*.

3) ☐ Interview Summary (PTO-413) Paper No(s)/Mail Date. _____ .

4) ☐ Other: _____.

IPR2024-00304
Nespresso USA, Inc. Ex. 1050
Page 55 of 250

DETAILED ACTION

Claim Objections

Claim 1-9 are objected to because of the following informalities: The use of a combination of “comprising” and “characterized in that" are the Examiner is also unable to determine whether the claims are Jepson type or open ended. In addition, Examiner is unable to determine whether the phrase used in every claim: “characterized in that" are meant to be EPO type “characterized in that" or Jepson type “characterized in that" or some other variation. The transition language that applicant utilizes such as “comprising” open ended preamble transition phrases that do not exclude the presence of non-claimed material (MPEP § 2111.03). Appropriate correction is required.

Claim Rejections - 35 USC § 101 and 112

1. The following is a quotation of 35 U.S.C. 112(b):

(B) CONCLUSION.—The specification shall conclude with one or more claims particularly pointing out and distinctly claiming the subject matter which the inventor or a joint inventor regards as the invention.

The following is a quotation of 35 U.S.C. 112 (pre-AIA), second paragraph:

The specification shall conclude with one or more claims particularly pointing out and distinctly claiming the subject matter which the applicant regards as his invention.

35 U.S.C. 101 reads as follows:

Whoever invents or discovers any new and useful process, machine, manufacture, or composition of matter, or any new and useful improvement thereof, may obtain a patent therefor, subject to the conditions and requirements of this title.

Claim 8 is rejected under 35 U.S.C. 112(b) or 35 U.S.C. 112 (pre-AIA), second paragraph, as being indefinite for failing to particularly point out and distinctly claim the subject matter which the inventor or a joint inventor, or for pre-AIA the applicant regards as the invention. Claim 8 provides for the use of a "portion capsule" "for use in preparing a hot beverage", but, since the claim does not set forth any steps involved in the method/process, it is unclear what method/process applicant is intending to encompass. A claim is indefinite where it merely recites a use without any active, positive steps delimiting how this use is actually practiced.

Claim 8 is rejected under 35 U.S.C. 101 for not meeting one of the statutory categories of invention: process, machine, manufacture, or composition of matter. Claim 8 is rejected under 35 U.S.C. 101 because the claimed recitation of a use, without setting forth any steps involved in the process, results in an improper definition of a process, i.e., results in a claim which is not a proper process claim under 35 U.S.C. 101. See for example *Ex parte Dunki*, 153 USPQ 678 (Bd.App. 1967) and *Clinical Products, Ltd.* v. *Brenner*, 255 F. Supp. 131, 149 USPQ 475 (D.D.C. 1966).

Claim Rejections - 35 USC § 102

1. The following is a quotation of the appropriate paragraphs of 35 U.S.C. 102 that form the basis for the rejections under this section made in this Office action:

> A person shall be entitled to a patent unless –
>
> (b) the invention was patented or described in a printed publication in this or a foreign country or in public use or on sale in this country, more than one year prior to the date of application for patent in the United States.

Note that none of applicant's priority documents were filed or published in English, which includes the continuation PCT and the three German foreign priority documents.

Claims 1-9 are rejected under 35 U.S.C. 102(b) as anticipated by Mahlich (U.S. Patent App. Pub. No. U.S. 2004/0089158 A1).

Regarding claim 1, Mahlich discloses a portion capsule for producing a beverage (beverage cartridge 1 for producing a beverage generally comprises an outer member 2, an inner member 3 and a laminate 5), comprising a base element 200 having a cavity in which a beverage raw material beverage is provided (interior 120 for containing one or more beverage raw ingredients) and which is closed by a membrane (laminate 5) fastened to the base element (inlet 121 and outlet 122 of interior 120 are initially sealed by the laminate membrane 5 being fastened to base of housing 200, which can include a filter 4 above ingredients housing 200 in filtration chamber 130, to filter liquid before mixes with beverage ingredients), and the base element comprising a flange (flange: the diameter of the first portion 19, second portion 20 and third portion 21 incrementally decreases such that the diameter of the cylindrical extension 18 decreases as one traverses from the top 11 to the closed lower face 31 of the cylindrical extension 18 and a generally horizontal shoulder 32 is formed on the cylindrical extension 18 at the junction between the second portion 20 and third portion 21), wherein the flange has an identifier 320 (product identifiers can be RFID tags or optical or magnetic barcodes 320, which is formed from a plurality of bars of contrasting color, such as black and white, which adjusts the drink to desired composition as indicated by identifier) in order to individualize the respective portion capsule, characterized in that the identifier is on a

gearwheel or in a gearwheel's section (recess gear: from the outside, the cylindrical extension 18 forms a recess in the outer surface of the cartridge and is shaped like recess gear/like part of recess gear with one protrusion, which is placed at the outer circumference of the flange; the annular frame 41 can also comprises an outer rim 51 and an inner hub 52 joined by ten equi-spaced radial spokes 53 (shaped like gear or part of gear as well)) (abstract; para. 0006, 0010, 0014-0015, 0059-0060, 0070 0077-0083, 0091, 0094, 0126, 0131 and 0134 ; fig. 10-12 and 14-22).

Regarding claim 2, Mahlich discloses the portion capsule according to claim 1, characterized in that the teeth of the gearwheel or the gearwheel's segment are provided to be shaped substantially like a triangle, rectangle, quadrate or a wave: “teeth” substantially look like a triangle (spokes), rectangle (squared corners/angles) and substantially wave shaped (slope changing substantially smoothly) (fig. 10-11, 14-16 and 18-22).

Regarding claim 3, Mahlich discloses the portion capsule according to claim 1, characterized in that a sealing surface 5 is provided at the flange (fig. 21-22).

Regarding claim 4, Mahlich discloses the portion capsule according to claim 1, characterized in that the identifier is provided 320 in the membrane 5 (printed barcode 320 provided on the laminate 5) (para. 0126; fig. 10 and 21).

Regarding claim 5, Mahlich discloses the portion capsule according to claim 4, characterized in that the membrane's outer area has means for fit locking on the flange (two movable arms for fit locking the cartridge in place before start brewing (0003-0004, 0067, 0113 and 0127-0128).

Regarding claim 6, Mahlich discloses the portion capsule according to claim 1, characterized in that a filter element which divides the cavity into a first region for accommodating the beverage raw material and a second region for accommodating a beverage extract, is arranged within the cavity (can be a separate filtration chamber 130, sealed to interior and passages 57 above the annular frame 41 are separated by the filter paper 4) (para. 0021-0023 0070 ad 0086).

Regarding claim 7, Mahlich discloses the portion capsule according to claim 6, characterized in that the filter element is made of a non-woven material (filter 4 can be paper, but is preferably made from a material with a high wet strength, such as a non-woven fiber material of polyester, a water-impermeable cellulosic material, such as a cellulosic material comprising woven paper fibres; the woven paper fibres may be admixed with fibres of polypropylene, polyvinyl chloride and/or polyethylene, which renders cellulosic material heat-sealable; filter 4 may also be treated or coated with a material which is activated by heat and/or pressure so that it can be sealed to the annular frame 41 in this way) (para. 0070 and 086).

Regarding claim 8, Mahlich discloses the portion capsule according to claim 1 for use in preparing a hot beverage (hot or cold beverages can be made, such as chocolate, coffee, tea, sweeteners, cordials, flavorings, alcoholic beverages, flavored milk, fruit juices, squashes, sauces and desserts (para. 0061 and 0107).

Regarding claim 9, Mahlich discloses the portion capsule according to claim 4, characterized in that the membrane's outer area has a gearwheels: substantially triangle shaped (spokes), substantially rectangle shaped (squared corners/angles) and

substantially wave shaped (slope changing substantially smoothly) (fig. 10-11, 14-16 and 18-22).

Conclusion

No claims are allowed.

The prior art made of record and not relied upon is considered pertinent to applicant's disclosure:

Kruger U.S. 2011/0097450 (portion capsule for producing a beverage);

Kruger U.S. 2011/0142996 (portion capsule for producing a beverage);

Kruger U.S. 2012/0207893 (brewing apparatus for extracting a portion capsule); and

Kruger U.S. 2013/0084363 (portion capsule for producing a beverage).

Any inquiry concerning this communication or earlier communications from the examiner should be directed to Daniel M. Propster whose telephone number is (571)270-5990. The examiner can normally be reached on 9:30 AM - 6:00 PM.

If attempts to reach the examiner by telephone are unsuccessful, the examiner's supervisor, Rena Dye can be reached on (571)272-3186. The fax phone number for the organization where this application or proceeding is assigned is 571-273-8300.

Information regarding the status of an application may be obtained from the Patent Application Information Retrieval (PAIR) system. Status information for published applications may be obtained from either Private PAIR or Public PAIR. Status information for unpublished applications is available through Private PAIR only. For more information about the PAIR system, see http://pair-direct.uspto.gov. Should you have questions on access to the Private PAIR system, contact the Electronic Business Center (EBC) at 866-217-9197 (toll-free). If you would like assistance from a USPTO Customer Service Representative or access to the automated information system, call 800-786-9199 (IN USA OR CANADA) or 571-272-1000.

/D. M. P./
Examiner, Art Unit 1792

/Rena L. Dye/
Supervisory Patent Examiner, Art Unit 1792

Notice of References Cited	Application/Control No. 13/744,623	Applicant(s)/Patent Under Reexamination KRÜGER ET AL.	
	Examiner Daniel M. Propster	Art Unit 1792	Page 1 of 1

U.S. PATENT DOCUMENTS

*		Document Number Country Code-Number-Kind Code	Date MM-YYYY	Name	Classification
*	A	US-2004/0089158	05-2004	Mahlich, Gotthard	099/275
*	B	US-2011/0097450	04-2011	KRUGER, Marc	426/77
*	C	US-2011/0142996	06-2011	KRUGER, Marc	426/80
*	D	US-2012/0207893	08-2012	Kruger, Marc	426/431
	E	US-			
	F	US-			
	G	US-			
	H	US-			
	I	US-			
	J	US-			
	K	US-			
	L	US-			
	M	US-			

FOREIGN PATENT DOCUMENTS

*		Document Number Country Code-Number-Kind Code	Date MM-YYYY	Country	Name	Classification
	N					
	O					
	P					
	Q					
	R					
	S					
	T					

NON-PATENT DOCUMENTS

*		Include as applicable: Author, Title Date, Publisher, Edition or Volume, Pertinent Pages)
	U	
	V	
	W	
	X	

*A copy of this reference is not being furnished with this Office action. (See MPEP § 707.05(a).)
Dates in MM-YYYY format are publication dates. Classifications may be US or foreign.

PTO/SB/08a (01-10)
Approved for use through 07/31/2012. OMB 0651-0031
U.S. Patent and Trademark Office; U.S. DEPARTMENT OF COMMERCE
Under the Paperwork Reduction Act of 1995, no persons are required to respond to a collection of information unless it contains a valid OMB control number.

INFORMATION DISCLOSURE STATEMENT BY APPLICANT

(Not for submission under 37 CFR 1.99)

Application Number	
Filing Date	2013-01-18
First Named Inventor	Marc KRÜGER
Art Unit	N/A
Examiner Name	N/A
Attorney Docket Number	26571-0030-C1

U.S.PATENTS Remove

Examiner Initial*	Cite No	Patent Number	Kind Code[1]	Issue Date	Name of Patentee or Applicant of cited Document	Pages,Columns,Lines where Relevant Passages or Relevant Figures Appear
	1					

If you wish to add additional U.S. Patent citation information please click the Add button. Add

U.S.PATENT APPLICATION PUBLICATIONS Remove

Examiner Initial*	Cite No	Publication Number	Kind Code[1]	Publication Date	Name of Patentee or Applicant of cited Document	Pages,Columns,Lines where Relevant Passages or Relevant Figures Appear
	1	20080187638	A1	2008-08-07	Hansen	
	2	20020048621	A1	2002-04-25	Boyd et al.	

If you wish to add additional U.S. Published Application citation information please click the Add button. Add

FOREIGN PATENT DOCUMENTS Remove

Examiner Initial*	Cite No	Foreign Document Number[3]	Country Code[2] ¡	Kind Code[4]	Publication Date	Name of Patentee or Applicant of cited Document	Pages,Columns,Lines where Relevant Passages or Relevant Figures Appear	T[5]
	~~1~~	~~1974638~~	~~EP~~	~~A1~~	~~2008-10-01~~	~~Tchibo GmbH~~		
	~~2~~	~~2912124~~	~~FR~~	~~A1~~	~~2008-08-08~~	~~Compagnie Mediterranecnne Des~~ Cafe		

ALL REFERENCES CONSIDERED EXCEPT WHERE LINED THROUGH. /D.P./

IPR2024-00304
Nespresso USA, Inc. Ex. 1050

Receipt date: 01/18/2013

INFORMATION DISCLOSURE STATEMENT BY APPLICANT
(Not for submission under 37 CFR 1.99)

Application Number	
Filing Date	2013-01-18
First Named Inventor	Marc KRÜGER
Art Unit	N/A
Examiner Name	N/A
Attorney Docket Number	26571-0030-C1

	3	1849718	EP	A1	2007-10-31	Cafe do Brasil S.p.A.		☐
	~~4~~	~~2005044087~~	~~WO~~	~~A1~~	~~2005-05-19~~	~~Griffes, Consulting, SA~~		☐
	~~5~~	~~1471012~~	~~EP~~	~~A2~~	~~2004-10-27~~	~~Ideacorp AG~~		☐
	~~6~~	~~02/078498~~	~~WO~~	~~A1~~	~~2002-10-10~~	~~Eugster/Frismag AG~~		☐
	~~7~~	~~0468079~~	~~EP~~	~~A1~~	~~1992-01-29~~	Societe Des Produits Nestle S.A.		☐
	~~8~~	~~0468078~~	~~EP~~	~~A1~~	~~1992-01-29~~	Societe Des Produits Nestle S.A.		☐
	~~9~~	~~2556329~~	~~FR~~	~~A1~~	~~1985-06-14~~	~~MUNIER, Rene~~		☐

If you wish to add additional Foreign Patent Document citation information please click the Add button Add

NON-PATENT LITERATURE DOCUMENTS Remove

Examiner Initials*	Cite No	Include name of the author (in CAPITAL LETTERS), title of the article (when appropriate), title of the item (book, magazine, journal, serial, symposium, catalog, etc), date, pages(s), volume-issue number(s), publisher, city and/or country where published.	T[5]
	1		☐

If you wish to add additional non-patent literature document citation information please click the Add button Add

Receipt date: 01/18/2013	Application Number	
INFORMATION DISCLOSURE STATEMENT BY APPLICANT (**Not for submission under 37 CFR 1.99)**	Filing Date	2013-01-18
	First Named Inventor	Marc KRÜGER
	Art Unit	N/A
	Examiner Name	N/A
	Attorney Docket Number	26571-0030-C1

EXAMINER SIGNATURE			
Examiner Signature	/D.P./	Date Considered	05/16/2013

*EXAMINER: Initial if reference considered, whether or not citation is in conformance with MPEP 609. Draw line through a citation if not in conformance and not considered. Include copy of this form with next communication to applicant.

[1] See Kind Codes of USPTO Patent Documents at www.USPTO.GOV or MPEP 901.04. [2] Enter office that issued the document, by the two-letter code (WIPO Standard ST.3). [3] For Japanese patent documents, the indication of the year of the reign of the Emperor must precede the serial number of the patent document. [4] Kind of document by the appropriate symbols as indicated on the document under WIPO Standard ST.16 if possible. [5] Applicant is to place a check mark here if English language translation is attached.

UNITED STATES PATENT AND TRADEMARK OFFICE

UNITED STATES DEPARTMENT OF COMMERCE
United States Patent and Trademark Office
Address: COMMISSIONER FOR PATENTS
P.O. Box 1450
Alexandria, Virginia 22313-1450
www.uspto.gov

BIB DATA SHEET

CONFIRMATION NO. 8894

SERIAL NUMBER	FILING or 371(c) DATE	CLASS	GROUP ART UNIT	ATTORNEY DOCKET NO.
13/744,623	01/18/2013 RULE	426	1792	26571-0030-C1

APPLICANTS
Marc KRÜGER, Bergisch-Gladbach, GERMANY;
K-FEE SYSTEMS GMBH, Bergisch Gladbach, GERMANY

**** CONTINUING DATA ***************************
This application is a CON of PCT/EP2011/003677 07/22/2011

**** FOREIGN APPLICATIONS ***************************
GERMANY 10 2011 010 534.4 02/07/2011
GERMANY 10 2010 044 251.8 09/02/2010
GERMANY 10 2010 031 988.0 07/22/2010

**** IF REQUIRED, FOREIGN FILING LICENSE GRANTED ****
02/09/2013

Foreign Priority claimed ☑ Yes ☐ No 35 USC 119(a-d) conditions met ☑ Yes ☐ No Verified and Acknowledged /DANIEL M PROPSTER/ Examiner's Signature	☐ Met after Allowance Initials	STATE OR COUNTRY	SHEETS DRAWINGS	TOTAL CLAIMS	INDEPENDENT CLAIMS
		GERMANY	12	9	1

ADDRESS
MCNEES WALLACE & NURICK LLC
100 PINE STREET
P.O. BOX 1166
HARRISBURG, PA 17108-1166
UNITED STATES

TITLE
PORTION CAPSULE HAVING AN IDENTIFIER

FILING FEE RECEIVED		
1260	FEES: Authority has been given in Paper No._____ to charge/credit DEPOSIT ACCOUNT No._____ for following:	☐ All Fees ☐ 1.16 Fees (Filing) ☐ 1.17 Fees (Processing Ext. of time) ☐ 1.18 Fees (Issue) ☐ Other _____ ☐ Credit

Search Notes	Application/Control No.	Applicant(s)/Patent Under Reexamination
	13744623	KRÜGER ET AL.
	Examiner	**Art Unit**
	DANIEL M PROPSTER	1792

CPC- SEARCHED

Symbol	Date	Examiner

CPC COMBINATION SETS - SEARCHED

Symbol	Date	Examiner

US CLASSIFICATION SEARCHED

Class	Subclass	Date	Examiner
426	077	5/16/2013	DMP

SEARCH NOTES

Search Notes	Date	Examiner
Inventor search.	5/16/2013	DMP
EAST text search.	5/16/2013	DMP

INTERFERENCE SEARCH

US Class/ CPC Symbol	US Subclass / CPC Group	Date	Examiner

/D.M.P./ Examiner.Art Unit 1792	

IPR2024-00304
Nespresso USA, Inc. Ex. 1050
Page 68 of 250

UNITED STATES PATENT AND TRADEMARK OFFICE

UNITED STATES DEPARTMENT OF COMMERCE
United States Patent and Trademark Office
Address: COMMISSIONER FOR PATENTS
P.O. Box 1450
Alexandria, Virginia 22313-1450
www.uspto.gov

APPLICATION NUMBER	FILING OR 371(C) DATE	FIRST NAMED APPLICANT	ATTY. DOCKET NO./TITLE
13/744,623	01/18/2013	Marc KRUGER	26571-0030-C1

CONFIRMATION NO. 8894

PUBLICATION NOTICE

OC000000061457550

26587
MCNEES WALLACE & NURICK LLC
100 PINE STREET
P.O. BOX 1166
HARRISBURG, PA 17108-1166

Title:PORTION CAPSULE HAVING AN IDENTIFIER

Publication No.US-2013-0129872-A1
Publication Date:05/23/2013

NOTICE OF PUBLICATION OF APPLICATION

The above-identified application will be electronically published as a patent application publication pursuant to 37 CFR 1.211, et seq. The patent application publication number and publication date are set forth above.

The publication may be accessed through the USPTO's publically available Searchable Databases via the Internet at www.uspto.gov. The direct link to access the publication is currently http://www.uspto.gov/patft/.

The publication process established by the Office does not provide for mailing a copy of the publication to applicant. A copy of the publication may be obtained from the Office upon payment of the appropriate fee set forth in 37 CFR 1.19(a)(1). Orders for copies of patent application publications are handled by the USPTO's Office of Public Records. The Office of Public Records can be reached by telephone at (703) 308-9726 or (800) 972-6382, by facsimile at (703) 305-8759, by mail addressed to the United States Patent and Trademark Office, Office of Public Records, Alexandria, VA 22313-1450 or via the Internet.

In addition, information on the status of the application, including the mailing date of Office actions and the dates of receipt of correspondence filed in the Office, may also be accessed via the Internet through the Patent Electronic Business Center at www.uspto.gov using the public side of the Patent Application Information and Retrieval (PAIR) system. The direct link to access this status information is currently http://pair.uspto.gov/. Prior to publication, such status information is confidential and may only be obtained by applicant using the private side of PAIR.

Further assistance in electronically accessing the publication, or about PAIR, is available by calling the Patent Electronic Business Center at 1-866-217-9197.

Office of Data Managment, Application Assistance Unit (571) 272-4000, or (571) 272-4200, or 1-888-786-0101

PTO/SB/08a (01-10)
Approved for use through 07/31/2012. OMB 0651-0031
U.S. Patent and Trademark Office; U.S. DEPARTMENT OF COMMERCE

Under the Paperwork Reduction Act of 1995, no persons are required to respond to a collection of information unless it contains a valid OMB control number.

INFORMATION DISCLOSURE STATEMENT BY APPLICANT

(Not for submission under 37 CFR 1.99)

Application Number	13744623
Filing Date	2013-01-18
First Named Inventor	Marc KRÜGER
Art Unit	1792
Examiner Name	PROPSTER, DANIEL M
Attorney Docket Number	26571-0030-C1

U.S.PATENTS Remove

Examiner Initial*	Cite No	Patent Number	Kind Code[1]	Issue Date	Name of Patentee or Applicant of cited Document	Pages,Columns,Lines where Relevant Passages or Relevant Figures Appear
	1					

If you wish to add additional U.S. Patent citation information please click the Add button. Add

U.S.PATENT APPLICATION PUBLICATIONS Remove

Examiner Initial*	Cite No	Publication Number	Kind Code[1]	Publication Date	Name of Patentee or Applicant of cited Document	Pages,Columns,Lines where Relevant Passages or Relevant Figures Appear
	1	20040089158	A1	2004-05-13	Mahlich	

If you wish to add additional U.S. Published Application citation information please click the Add button. Add

FOREIGN PATENT DOCUMENTS Remove

Examiner Initial*	Cite No	Foreign Document Number[3]	Country Code[2] ¡	Kind Code[4]	Publication Date	Name of Patentee or Applicant of cited Document	Pages,Columns,Lines where Relevant Passages or Relevant Figures Appear	T[5]
	1							☐

If you wish to add additional Foreign Patent Document citation information please click the Add button Add

NON-PATENT LITERATURE DOCUMENTS Remove

Examiner Initials*	Cite No	Include name of the author (in CAPITAL LETTERS), title of the article (when appropriate), title of the item (book, magazine, journal, serial, symposium, catalog, etc), date, pages(s), volume-issue number(s), publisher, city and/or country where published.	T[5]

INFORMATION DISCLOSURE STATEMENT BY APPLICANT (Not for submission under 37 CFR 1.99)	Application Number	13744623
	Filing Date	2013-01-18
	First Named Inventor	Marc KRÜGER
	Art Unit	1792
	Examiner Name	PROPSTER, DANIEL M
	Attorney Docket Number	26571-0030-C1

	1		☐

If you wish to add additional non-patent literature document citation information please click the Add button Add

EXAMINER SIGNATURE

Examiner Signature		Date Considered	

*EXAMINER: Initial if reference considered, whether or not citation is in conformance with MPEP 609. Draw line through a citation if not in conformance and not considered. Include copy of this form with next communication to applicant.

[1] See Kind Codes of USPTO Patent Documents at www.USPTO.GOV or MPEP 901.04. [2] Enter office that issued the document, by the two-letter code (WIPO Standard ST.3). [3] For Japanese patent documents, the indication of the year of the reign of the Emperor must precede the serial number of the patent document. [4] Kind of document by the appropriate symbols as indicated on the document under WIPO Standard ST.16 if possible. [5] Applicant is to place a check mark here if English language translation is attached.

INFORMATION DISCLOSURE STATEMENT BY APPLICANT (Not for submission under 37 CFR 1.99)		
	Application Number	13744623
	Filing Date	2013-01-18
	First Named Inventor	Marc KRÜGER
	Art Unit	1792
	Examiner Name	PROPSTER, DANIEL M
	Attorney Docket Number	26571-0030-C1

CERTIFICATION STATEMENT

Please see 37 CFR 1.97 and 1.98 to make the appropriate selection(s):

☒ That each item of information contained in the information disclosure statement was first cited in any communication from a foreign patent office in a counterpart foreign application not more than three months prior to the filing of the information disclosure statement. See 37 CFR 1.97(e)(1).

OR

☐ That no item of information contained in the information disclosure statement was cited in a communication from a foreign patent office in a counterpart foreign application, and, to the knowledge of the person signing the certification after making reasonable inquiry, no item of information contained in the information disclosure statement was known to any individual designated in 37 CFR 1.56(c) more than three months prior to the filing of the information disclosure statement. See 37 CFR 1.97(e)(2).

☐ See attached certification statement.

☐ The fee set forth in 37 CFR 1.17 (p) has been submitted herewith.

☐ A certification statement is not submitted herewith.

SIGNATURE

A signature of the applicant or representative is required in accordance with CFR 1.33, 10.18. Please see CFR 1.4(d) for the form of the signature.

Signature	/Brian T. Sattizahn/	Date (YYYY-MM-DD)	2013-09-12
Name/Print	Brian T. Sattizahn	Registration Number	46,401

This collection of information is required by 37 CFR 1.97 and 1.98. The information is required to obtain or retain a benefit by the public which is to file (and by the USPTO to process) an application. Confidentiality is governed by 35 U.S.C. 122 and 37 CFR 1.14. This collection is estimated to take 1 hour to complete, including gathering, preparing and submitting the completed application form to the USPTO. Time will vary depending upon the individual case. Any comments on the amount of time you require to complete this form and/or suggestions for reducing this burden, should be sent to the Chief Information Officer, U.S. Patent and Trademark Office, U.S. Department of Commerce, P.O. Box 1450, Alexandria, VA 22313-1450. DO NOT SEND FEES OR COMPLETED FORMS TO THIS ADDRESS. **SEND TO: Commissioner for Patents, P.O. Box 1450, Alexandria, VA 22313-1450.**

Privacy Act Statement

The Privacy Act of 1974 (P.L. 93-579) requires that you be given certain information in connection with your submission of the attached form related to a patent application or patent. Accordingly, pursuant to the requirements of the Act, please be advised that: (1) the general authority for the collection of this information is 35 U.S.C. 2(b)(2); (2) furnishing of the information solicited is voluntary; and (3) the principal purpose for which the information is used by the U.S. Patent and Trademark Office is to process and/or examine your submission related to a patent application or patent. If you do not furnish the requested information, the U.S. Patent and Trademark Office may not be able to process and/or examine your submission, which may result in termination of proceedings or abandonment of the application or expiration of the patent.

The information provided by you in this form will be subject to the following routine uses:

1. The information on this form will be treated confidentially to the extent allowed under the Freedom of Information Act (5 U.S.C. 552) and the Privacy Act (5 U.S.C. 552a). Records from this system of records may be disclosed to the Department of Justice to determine whether the Freedom of Information Act requires disclosure of these record s.

2. A record from this system of records may be disclosed, as a routine use, in the course of presenting evidence to a court, magistrate, or administrative tribunal, including disclosures to opposing counsel in the course of settlement negotiations.

3. A record in this system of records may be disclosed, as a routine use, to a Member of Congress submitting a request involving an individual, to whom the record pertains, when the individual has requested assistance from the Member with respect to the subject matter of the record.

4. A record in this system of records may be disclosed, as a routine use, to a contractor of the Agency having need for the information in order to perform a contract. Recipients of information shall be required to comply with the requirements of the Privacy Act of 1974, as amended, pursuant to 5 U.S.C. 552a(m).

5. A record related to an International Application filed under the Patent Cooperation Treaty in this system of records may be disclosed, as a routine use, to the International Bureau of the World Intellectual Property Organization, pursuant to the Patent Cooperation Treaty.

6. A record in this system of records may be disclosed, as a routine use, to another federal agency for purposes of National Security review (35 U.S.C. 181) and for review pursuant to the Atomic Energy Act (42 U.S.C. 218(c)).

7. A record from this system of records may be disclosed, as a routine use, to the Administrator, General Services, or his/her designee, during an inspection of records conducted by GSA as part of that agency's responsibility to recommend improvements in records management practices and programs, under authority of 44 U.S.C. 2904 and 2906. Such disclosure shall be made in accordance with the GSA regulations governing inspection of records for this purpose, and any other relevant (i.e., GSA or Commerce) directive. Such disclosure shall not be used to make determinations about individuals.

8. A record from this system of records may be disclosed, as a routine use, to the public after either publication of the application pursuant to 35 U.S.C. 122(b) or issuance of a patent pursuant to 35 U.S.C. 151. Further, a record may be disclosed, subject to the limitations of 37 CFR 1.14, as a routine use, to the public if the record was filed in an application which became abandoned or in which the proceedings were terminated and which application is referenced by either a published application, an application open to public inspections or an issued patent.

9. A record from this system of records may be disclosed, as a routine use, to a Federal, State, or local law enforcement agency, if the USPTO becomes aware of a violation or potential violation of law or regulation.

Electronic Acknowledgement Receipt

EFS ID:	16835935
Application Number:	13744623
International Application Number:	
Confirmation Number:	8894
Title of Invention:	PORTION CAPSULE HAVING AN IDENTIFIER
First Named Inventor/Applicant Name:	Marc KRÜGER
Customer Number:	26587
Filer:	Brian T. Sattizahn/Kerri Smith
Filer Authorized By:	Brian T. Sattizahn
Attorney Docket Number:	26571-0030-C1
Receipt Date:	12-SEP-2013
Filing Date:	18-JAN-2013
Time Stamp:	14:23:20
Application Type:	Utility under 35 USC 111(a)

Payment information:

Submitted with Payment	no

File Listing:

Document Number	Document Description	File Name	File Size(Bytes)/ Message Digest	Multi Part /.zip	Pages (if appl.)
1	Information Disclosure Statement (IDS) Form (SB08)	A3545363.PDF	612171 6aa42f493bc757f91fdc4f5364a2183484355d71	no	4

Warnings:

Information:

Total Files Size (in bytes):	612171

This Acknowledgement Receipt evidences receipt on the noted date by the USPTO of the indicated documents, characterized by the applicant, and including page counts, where applicable. It serves as evidence of receipt similar to a Post Card, as described in MPEP 503.

New Applications Under 35 U.S.C. 111
If a new application is being filed and the application includes the necessary components for a filing date (see 37 CFR 1.53(b)-(d) and MPEP 506), a Filing Receipt (37 CFR 1.54) will be issued in due course and the date shown on this Acknowledgement Receipt will establish the filing date of the application.

National Stage of an International Application under 35 U.S.C. 371
If a timely submission to enter the national stage of an international application is compliant with the conditions of 35 U.S.C. 371 and other applicable requirements a Form PCT/DO/EO/903 indicating acceptance of the application as a national stage submission under 35 U.S.C. 371 will be issued in addition to the Filing Receipt, in due course.

New International Application Filed with the USPTO as a Receiving Office
If a new international application is being filed and the international application includes the necessary components for an international filing date (see PCT Article 11 and MPEP 1810), a Notification of the International Application Number and of the International Filing Date (Form PCT/RO/105) will be issued in due course, subject to prescriptions concerning national security, and the date shown on this Acknowledgement Receipt will establish the international filing date of the application.

IN THE UNITED STATES PATENT AND TRADEMARK OFFICE

In re Application of:	M. KRÜGER	:	Confirmation No.:	8894
Application No.:	13/744,623	:	Group Art Unit:	1792
Filed:	January 18, 2013	:	Examiner:	D. M. Propster

For: PORTION CAPSULE HAVING AN IDENTIFIER

RESPONSE UNDER 37 C.F.R. 1.111

Mail Stop Amendment
Commissioner for Patents
P.O. Box 1450
Alexandria, VA 22313-1450

Sir:

Please consider the following Response for the above-referenced Application.

A.) INTRODUCTORY COMMENTS

This Response is being submitted in reply to the Office Action dated May 22, 2013.

The **Amendments to the Claims** section begins on page 2 of this Response and any amendments to the claims are reflected in the listing of the claims included therein.

The **Remarks** section begins on page 4 of this Response.

B.) AMENDMENTS TO THE CLAIMS

This listing of the claims will replace all prior versions, and listings of claims in the Application.

1. (currently amended) Portion capsule for producing a beverage[[,]] comprising: a base element having a cavity in which a beverage raw material is provided, ~~and which is closed by a membrane fastened to~~ the base element comprises an edge region that is attached to the base element, the cavity is closed by a membrane connected to the edge region of ~~and~~ the base element ~~comprising a flange,~~ ; and ~~wherein the flange has~~ an identifier ~~in order~~ provided to individualize the respective portion capsule, ~~**characterized in that** the identifier is a gearwheel or a gearwheel's section, which~~ the identifier is located ~~placed~~ at the edge region opposite from the membrane ~~outer circumference of the flange~~.

2. (currently amended) Portion capsule according to claim 1, wherein ~~**characterized in that**~~ the identifier is an electrically conductive area ~~teeth of the gearwheel or the gearwheel's segment are provided to be shaped substantially like a triangle, rectangle, quadrate or a wave~~.

3. (currently amended) Portion capsule according to claim 2, wherein ~~1, **characterized in that** a sealing surface is provided at the flange~~ the identifier is an electrically conductive coat on the material of the edge region.

4. (currently amended) Portion capsule according to claim 1-, wherein ~~**characterized in that**~~ the identifier is provided as a ring ~~in the membrane~~.

5. (currently amended) Portion capsule according to claim 1, wherein ~~4, **characterized in that**~~ the identifier is a section made of metallic material ~~membrane's outer area has means for fit locking~~.

6. (currently amended) Portion capsule according to claim 1, wherein ~~characterized in that~~ a filter element, which divides the cavity into a first region for accommodating the beverage raw material and a second region for accommodating a beverage extract, is arranged within the cavity.

7. (currently amended) Portion capsule according to claim 6, wherein ~~characterized in that~~ the filter element is made of a non-woven material.

8. (cancelled)

9. (cancelled)

C.) REMARKS

This Response is being submitted in reply to the Office Action dated May 22, 2013.

Upon entry of this Response, claims 1-7 will be pending in the Application.

In the outstanding Office Action, the Examiner objected claims 1-9 because of several informalities; rejected claim 8 under 35 U.S.C. 112, second paragraph, as being indefinite; rejected claim 8 under 35 U.S.C. 101 for not meeting one of the statutory classes of invention; and rejected claims 1-9 under 35 U.S.C. 102(b) as being anticipated by Mahlich (U.S. Patent Application Publication No. 2004/0089158).

Rejection under 35 U.S.C. 102

The Examiner rejected claims 1-9 under 35 U.S.C. 102(b) as being anticipated by Mahlich (U.S. Patent Application Publication No. 2004/0089158), hereinafter referred to as "Mahlich."

Specifically, the Examiner stated, in part, that

> **Regarding claim 1,** Mahlich discloses a portion capsule for producing a beverage (beverage cartridge 1 for producing a beverage generally comprises an outer member 2, an inner member 3 and a laminate 5), comprising a base element 200 having a cavity in which a beverage raw material beverage is provided (interior 120 for containing one or more beverage raw ingredients) and which is closed by a membrane (laminate 5) fastened to the base element (inlet 121 and outlet 122 of interior 120 are initially sealed by the laminate membrane 5 being fastened to base of housing 200, which can include a filter 4 above ingredients housing 200 in filtration chamber 130, to filter liquid before mixes with beverage ingredients), and the base element comprising a flange (flange: the diameter of the first portion 19, second portion 20 and third portion 21 incrementally decreases such that the diameter of the cylindrical extension 18 decreases as one traverses from the top 11 to the closed lower face 31 of the cylindrical extension 18 and a generally horizontal shoulder 32 is formed on the cylindrical extension 18 at the junction between the second portion 20 and third portion 21), wherein the flange has an identifier 320 (product identifiers can be RFID tags or optical or magnetic barcodes 320, which is formed from a plurality of bars of contrasting color, such as black and white, which adjusts the drink to desired composition as indicated by identifier) in order to individualize the respective portion capsule, characterized in that the identifier is on a

gearwheel or in a gearwheel's section (recess gear: from the outside, the cylindrical extension 18 forms a recess in the outer surface of the cartridge and is shaped like recess gear/like part of recess gear with one protrusion, which is placed at the outer circumference of the flange; the annular frame 41 can also comprises an outer rim 51 and an inner hub 52 joined by ten equi-spaced radial spokes 53 (shaped like gear or part of gear as well)) (abstract; para. 0006, 0010, 0014-0015, 0059-0060, 0070 0077-0083, 0091, 0094, 0126, 0131 and 0134 ; fig. 10-12 and 14-22).

Applicant respectfully traverses the rejection of claims 1-9 under 35 U.S.C. 102(b). Claims 8 and 9 have been cancelled herein thereby rendering the rejection thereagainst moot.

Mahlich, as understood, is directed to a machine readable identification on a single-serving unit containing coffee powder for espresso machines, designed so that it can be read easily and accurately, is structured in a rotation-symmetrical manner and is applied to an essentially level surface of the single-serving unit, whereby the single-serving unit preferably consists of a single-serving capsule having an essentially circular base whereupon the identification is applied in a coaxial manner.

In contrast, independent claim 1 recites a portion capsule for producing a beverage comprising: a base element having a cavity in which a beverage raw material is provided, the base element comprises an edge region that is attached to the base element, the cavity is closed by a membrane connected to the edge region of the base element; and an identifier provided to individualize the respective portion capsule, the identifier is located at the edge region opposite from the membrane.

The examiner is reminded that "'[a] claim is anticipated only if each and every element as set forth in the claim is found, either expressly or inherently described, in a single prior art reference.' *Verdegaal Bros. v. Union Oil Co. of California*, 814 F.2d 628, 631, 2 USPQ2d 1051, 1053 (Fed. Cir. 1987)." *See* Manual of Patent Examining Procedure, 8th Edition, Revision 9 (MPEP), Section 2131.

In addition, "'[t]he identical invention must be shown in as complete detail as is contained in the … claim.' *Richardson v. Suzuki Motor Co.*, 868 F.2d 1226, 1236, 9 USPQ2d 1913, 1920 (Fed. Cir. 1989)." *See* MPEP, Section 2131.

Several of the features recited by Applicant in independent claim 1 are not disclosed by Mahlich. Mahlich does not disclose an identifier provided to individualize the respective portion

capsule, the identifier is located at the edge region opposite from the membrane as recited by Applicant in independent claim 1. As clearly described in paragraph [0031] of Mahlich, the "identifier" is located on the membrane portion of the base, thereby precluding it from being located on the edge region opposite the membrane. In addition, the Examiner's rejections are very confusing to Applicant as the Examiner frequently identifies reference numerals, figures and paragraphs in Mahlich that are not present in Mahlich. For example, the Examiner identifies figures 10-12 and 14-22 of Mahlich as containing relevant disclosure. The problem with that identification is that Mahlich only includes 4 figures. Thus, since Mahlich does not disclose all of the limitations recited in independent claim 1, Applicant respectfully submits that Mahlich does not anticipate Applicant's invention as recited in independent claim 1.

Therefore, for the reasons given above, independent claim 1 is believed to be distinguishable from Mahlich and therefore are not anticipated nor rendered obvious by Mahlich.

Dependent claims 2-7 are believed to be allowable as depending from what is believed to be an allowable independent claim 1 for the reasons given above. In addition, claims 2-7 recite further limitations that distinguish over the applied art. In conclusion, it is respectfully submitted that claims 1-7 are not anticipated nor rendered obvious by Mahlich and are therefore allowable.

Rejections under 35 U.S.C. 101 and 112

The Examiner rejected claim 8 under 35 U.S.C. 101 for not meeting one of the statutory categories of invention: process, machine, manufacture, or composition of matter. Applicant respectfully traverses the rejection of claim 8 under 35 U.S.C. 101. Claim 8 has been cancelled herein thereby rendering the rejection thereagainst moot.

The Examiner rejected claim 8 under 35 U.S.C. 112, second paragraph, as being indefinite for failing to particularly point out and distinctly claim the subject matter applicant regards as the invention. Applicant respectfully traverses the rejection of claim 8 under 35 U.S.C. 112, second paragraph. Claim 8 has been cancelled herein thereby rendering the rejection thereagainst moot.

Objection to the Claims

The Examiner objected to claims 1-9 for various informalities. In response thereto, applicant has amended claims 1-7 to remove the objected to "characterized in that" language in a manner believed to overcome the objection. Claims 8 and 9 have been cancelled herein thereby rendering the objection thereagainst moot.

CONCLUSION

For at least the reasons set forth above, Applicant respectfully requests reconsideration of the Application and withdrawal of any outstanding objections and rejections. As a result of the amendments and remarks presented herein, Applicant respectfully submits that claims 1-7 are not anticipated by nor rendered obvious by the applied art, either alone or in combination, and thus, are in condition for allowance. As the claims are not anticipated by nor rendered obvious in view of the applied art, Applicant requests allowance of claims 1-7 in a timely manner. If the Examiner believes that prosecution of this Application could be expedited by a telephone conference, the Examiner is encouraged to contact the undersigned.

If an extension of time is necessary for consideration of this Response, Applicant hereby requests an appropriate extension of time for this Response to be entered and considered by the Examiner.

Applicant believes a 3-month extension of time is required to submit this Response and correspondingly requests a 3-month extension of time for submission of this Response. If any additional extension of time is necessary for consideration of this Response, Applicant hereby requests an appropriate extension of time for this Response to be entered and considered by the Examiner.

The Commissioner is hereby authorized to charge any additional fees necessary for consideration of this Response or to maintain the pendency of this Application and may credit any overpayments to Deposit Account No. 50-1059.

Respectfully submitted,
McNEES, WALLACE & NURICK

By **/Brian T. Sattizahn/**

Brian T. Sattizahn
Reg. No. 46,401
100 Pine Street, P.O. Box 1166
Harrisburg, PA 17108-1166
Tel: (717) 237-5258
Fax: (717) 237-5300

Dated: October 23, 2013

Electronic Patent Application Fee Transmittal

Application Number:	13744623
Filing Date:	18-Jan-2013
Title of Invention:	PORTION CAPSULE HAVING AN IDENTIFIER
First Named Inventor/Applicant Name:	Marc KRÜGER
Filer:	Brian T. Sattizahn/Kerri Smith
Attorney Docket Number:	26571-0030-C1

Filed as Large Entity

Utility under 35 USC 111(a) Filing Fees

Description	Fee Code	Quantity	Amount	Sub-Total in USD($)
Basic Filing:				
Pages:				
Claims:				
Miscellaneous-Filing:				
Petition:				
Patent-Appeals-and-Interference:				
Post-Allowance-and-Post-Issuance:				
Extension-of-Time:				
Extension - 3 months with $0 paid	1253	1	1400	1400

IPR2024-00304
Nespresso USA, Inc. Ex. 1050
Page 84 of 250

Description	Fee Code	Quantity	Amount	Sub-Total in USD($)
Miscellaneous:				
			Total in USD ($)	**1400**

Electronic Acknowledgement Receipt

EFS ID:	17203824
Application Number:	13744623
International Application Number:	
Confirmation Number:	8894
Title of Invention:	PORTION CAPSULE HAVING AN IDENTIFIER
First Named Inventor/Applicant Name:	Marc KRÜGER
Customer Number:	26587
Filer:	Brian T. Sattizahn/Kerri Smith
Filer Authorized By:	Brian T. Sattizahn
Attorney Docket Number:	26571-0030-C1
Receipt Date:	23-OCT-2013
Filing Date:	18-JAN-2013
Time Stamp:	12:25:30
Application Type:	Utility under 35 USC 111(a)

Payment information:

Submitted with Payment	yes
Payment Type	Deposit Account
Payment was successfully received in RAM	$1400
RAM confirmation Number	12521
Deposit Account	501059
Authorized User	

The Director of the USPTO is hereby authorized to charge indicated fees and credit any overpayment as follows:

Charge any Additional Fees required under 37 C.F.R. Section 1.17 (Patent application and reexamination processing fees)

Charge any Additional Fees required under 37 C.F.R. Section 1.19 (Document supply fees)

Charge any Additional Fees required under 37 C.F.R. Section 1.20 (Post Issuance fees)

Charge any Additional Fees required under 37 C.F.R. Section 1.21 (Miscellaneous fees and charges)

File Listing:

Document Number	Document Description	File Name	File Size(Bytes)/ Message Digest	Multi Part /.zip	Pages (if appl.)
1		A3608307.PDF	353480 2200aab0df78c895d17d58841ea705634ff7419d	yes	8
	Multipart Description/PDF files in .zip description				
	Document Description		**Start**	**End**	
	Amendment/Req. Reconsideration-After Non-Final Reject		1	1	
	Claims		2	3	
	Applicant Arguments/Remarks Made in an Amendment		4	8	
Warnings:					
Information:					
2	Fee Worksheet (SB06)	fee-info.pdf	30614 8a216c6d7c5e5464b2d1710bc050de98f7fe72d4	no	2
Warnings:					
Information:					
		Total Files Size (in bytes):	384094		

This Acknowledgement Receipt evidences receipt on the noted date by the USPTO of the indicated documents, characterized by the applicant, and including page counts, where applicable. It serves as evidence of receipt similar to a Post Card, as described in MPEP 503.

<u>New Applications Under 35 U.S.C. 111</u>
If a new application is being filed and the application includes the necessary components for a filing date (see 37 CFR 1.53(b)-(d) and MPEP 506), a Filing Receipt (37 CFR 1.54) will be issued in due course and the date shown on this Acknowledgement Receipt will establish the filing date of the application.

<u>National Stage of an International Application under 35 U.S.C. 371</u>
If a timely submission to enter the national stage of an international application is compliant with the conditions of 35 U.S.C. 371 and other applicable requirements a Form PCT/DO/EO/903 indicating acceptance of the application as a national stage submission under 35 U.S.C. 371 will be issued in addition to the Filing Receipt, in due course.

<u>New International Application Filed with the USPTO as a Receiving Office</u>
If a new international application is being filed and the international application includes the necessary components for an international filing date (see PCT Article 11 and MPEP 1810), a Notification of the International Application Number and of the International Filing Date (Form PCT/RO/105) will be issued in due course, subject to prescriptions concerning national security, and the date shown on this Acknowledgement Receipt will establish the international filing date of the application.

PTO/SB/06 (09-11)
Approved for use through 1/31/2014. OMB 0651-0032
U.S. Patent and Trademark Office; U.S. DEPARTMENT OF COMMERCE
Under the Paperwork Reduction Act of 1995, no persons are required to respond to a collection of information unless it displays a valid OMB control number.

PATENT APPLICATION FEE DETERMINATION RECORD

Substitute for Form PTO-875

Application or Docket Number	Filing Date	
13/744,623	01/18/2013	☐ To be Mailed

ENTITY: ☒ LARGE ☐ SMALL ☐ MICRO

APPLICATION AS FILED – PART I

FOR	(Column 1) NUMBER FILED	(Column 2) NUMBER EXTRA	RATE ($)	FEE ($)
☒ BASIC FEE (37 CFR 1.16(a), (b), or (c))	N/A	N/A	N/A	**390**
☐ SEARCH FEE (37 CFR 1.16(k), (i), or (m))	N/A	N/A	N/A	
☐ EXAMINATION FEE (37 CFR 1.16(o), (p), or (q))	N/A	N/A	N/A	
TOTAL CLAIMS (37 CFR 1.16(i))	minus 20 =	*	x $ =	
INDEPENDENT CLAIMS (37 CFR 1.16(h))	minus 3 =	*	x $ =	
☐ APPLICATION SIZE FEE (37 CFR 1.16(s))	If the specification and drawings exceed 100 sheets of paper, the application size fee due is $310 ($155 for small entity) for each additional 50 sheets or fraction thereof. See 35 U.S.C. 41(a)(1)(G) and 37 CFR 1.16(s).			
☐ MULTIPLE DEPENDENT CLAIM PRESENT (37 CFR 1.16(j))				
* If the difference in column 1 is less than zero, enter "0" in column 2.			TOTAL	**390**

APPLICATION AS AMENDED – PART II

AMENDMENT

10/23/2013	(Column 1) CLAIMS REMAINING AFTER AMENDMENT		(Column 2) HIGHEST NUMBER PREVIOUSLY PAID FOR	(Column 3) PRESENT EXTRA	RATE ($)	ADDITIONAL FEE ($)
Total (37 CFR 1.16(i))	* 7	Minus	** 20	= 0	x $80 =	0
Independent (37 CFR 1.16(h))	* 1	Minus	***3	= 0	x $420 =	0
☐ Application Size Fee (37 CFR 1.16(s))						
☐ FIRST PRESENTATION OF MULTIPLE DEPENDENT CLAIM (37 CFR 1.16(j))						
					TOTAL ADD'L FEE	**0**

AMENDMENT

	(Column 1) CLAIMS REMAINING AFTER AMENDMENT		(Column 2) HIGHEST NUMBER PREVIOUSLY PAID FOR	(Column 3) PRESENT EXTRA	RATE ($)	ADDITIONAL FEE ($)
Total (37 CFR 1.16(i))	*	Minus	**	=	x $ =	
Independent (37 CFR 1.16(h))	*	Minus	***	=	x $ =	
☐ Application Size Fee (37 CFR 1.16(s))						
☐ FIRST PRESENTATION OF MULTIPLE DEPENDENT CLAIM (37 CFR 1.16(j))						
					TOTAL ADD'L FEE	

* If the entry in column 1 is less than the entry in column 2, write "0" in column 3.
** If the "Highest Number Previously Paid For" IN THIS SPACE is less than 20, enter "20".
*** If the "Highest Number Previously Paid For" IN THIS SPACE is less than 3, enter "3".
The "Highest Number Previously Paid For" (Total or Independent) is the highest number found in the appropriate box in column 1.

LIE
/TAMMY d. MCBETH BROWN/

This collection of information is required by 37 CFR 1.16. The information is required to obtain or retain a benefit by the public which is to file (and by the USPTO to process) an application. Confidentiality is governed by 35 U.S.C. 122 and 37 CFR 1.14. This collection is estimated to take 12 minutes to complete, including gathering, preparing, and submitting the completed application form to the USPTO. Time will vary depending upon the individual case. Any comments on the amount of time you require to complete this form and/or suggestions for reducing this burden, should be sent to the Chief Information Officer, U.S. Patent and Trademark Office, U.S. Department of Commerce, P.O. Box 1450, Alexandria, VA 22313-1450. DO NOT SEND FEES OR COMPLETED FORMS TO THIS ADDRESS. **SEND TO: Commissioner for Patents, P.O. Box 1450, Alexandria, VA 22313-1450.**
If you need assistance in completing the form, call 1-800-PTO-9199 and select option 2.

UNITED STATES PATENT AND TRADEMARK OFFICE

UNITED STATES DEPARTMENT OF COMMERCE
United States Patent and Trademark Office
Address: COMMISSIONER FOR PATENTS
P.O. Box 1450
Alexandria, Virginia 22313-1450
www.uspto.gov

APPLICATION NO.	FILING DATE	FIRST NAMED INVENTOR	ATTORNEY DOCKET NO.	CONFIRMATION NO.
13/744,623	01/18/2013	Marc KRÜGER	26571-0030-C1	8894

26587 7590 09/16/2014
MCNEES WALLACE & NURICK LLC
100 PINE STREET
P.O. BOX 1166
HARRISBURG, PA 17108-1166

EXAMINER
BECKER, DREW E

ART UNIT	PAPER NUMBER
1792	

MAIL DATE	DELIVERY MODE
09/16/2014	PAPER

Please find below and/or attached an Office communication concerning this application or proceeding.

The time period for reply, if any, is set in the attached communication.

PTOL-90A (Rev. 04/07)

Office Action Summary	Application No. 13/744,623	Applicant(s) KRÜGER, MARC	
	Examiner DREW BECKER	Art Unit 1792	AIA (First Inventor to File) Status No

-- The MAILING DATE of this communication appears on the cover sheet with the correspondence address --

Period for Reply

A SHORTENED STATUTORY PERIOD FOR REPLY IS SET TO EXPIRE 3 MONTHS FROM THE MAILING DATE OF THIS COMMUNICATION.

- Extensions of time may be available under the provisions of 37 CFR 1.136(a). In no event, however, may a reply be timely filed after SIX (6) MONTHS from the mailing date of this communication.
- If NO period for reply is specified above, the maximum statutory period will apply and will expire SIX (6) MONTHS from the mailing date of this communication.
- Failure to reply within the set or extended period for reply will, by statute, cause the application to become ABANDONED (35 U.S.C. § 133). Any reply received by the Office later than three months after the mailing date of this communication, even if timely filed, may reduce any earned patent term adjustment. See 37 CFR 1.704(b).

Status

1)☒ Responsive to communication(s) filed on 10/23/13.

☐ A declaration(s)/affidavit(s) under **37 CFR 1.130(b)** was/were filed on _____.

2a)☐ This action is **FINAL**. 2b)☒ This action is non-final.

3)☐ An election was made by the applicant in response to a restriction requirement set forth during the interview on _____; the restriction requirement and election have been incorporated into this action.

4)☐ Since this application is in condition for allowance except for formal matters, prosecution as to the merits is closed in accordance with the practice under *Ex parte Quayle*, 1935 C.D. 11, 453 O.G. 213.

Disposition of Claims*

5)☒ Claim(s) 1-7 is/are pending in the application.

5a) Of the above claim(s) _____ is/are withdrawn from consideration.

6)☐ Claim(s) _____ is/are allowed.

7)☒ Claim(s) 1-7 is/are rejected.

8)☐ Claim(s) _____ is/are objected to.

9)☐ Claim(s) _____ are subject to restriction and/or election requirement.

* If any claims have been determined allowable, you may be eligible to benefit from the **Patent Prosecution Highway** program at a participating intellectual property office for the corresponding application. For more information, please see http://www.uspto.gov/patents/init_events/pph/index.jsp or send an inquiry to PPHfeedback@uspto.gov.

Application Papers

10)☐ The specification is objected to by the Examiner.

11)☐ The drawing(s) filed on _____ is/are: a)☐ accepted or b)☐ objected to by the Examiner.

Applicant may not request that any objection to the drawing(s) be held in abeyance. See 37 CFR 1.85(a).

Replacement drawing sheet(s) including the correction is required if the drawing(s) is objected to. See 37 CFR 1.121(d).

Priority under 35 U.S.C. § 119

12)☒ Acknowledgment is made of a claim for foreign priority under 35 U.S.C. § 119(a)-(d) or (f).

Certified copies:

a)☒ All b)☐ Some** c)☐ None of the:

1.☐ Certified copies of the priority documents have been received.

2.☐ Certified copies of the priority documents have been received in Application No. _____.

3.☒ Copies of the certified copies of the priority documents have been received in this National Stage application from the International Bureau (PCT Rule 17.2(a)).

** See the attached detailed Office action for a list of the certified copies not received.

Attachment(s)

1) ☒ Notice of References Cited (PTO-892)

2) ☒ Information Disclosure Statement(s) (PTO/SB/08a and/or PTO/SB/08b) Paper No(s)/Mail Date 9/12/13.

3) ☐ Interview Summary (PTO-413) Paper No(s)/Mail Date. _____ .

4) ☐ Other: _____.

The present application is being examined under the pre-AIA first to invent provisions.

DETAILED ACTION

Claim Rejections - 35 USC § 102

1. The following is a quotation of the appropriate paragraphs of pre-AIA 35 U.S.C. 102 that form the basis for the rejections under this section made in this Office action:

> A person shall be entitled to a patent unless –
>
> (b) the invention was patented or described in a printed publication in this or a foreign country or in public use or on sale in this country, more than one year prior to the date of application for patent in the United States.

Claims 1 and 6-7 are rejected under pre-AIA 35 U.S.C. 102(b) as being anticipated by Lazaris et al [Pat. No. 6,655,260], as evidenced by Lazaris et al [US 2001/0047724A1].

Lazaris et al '260 teach a beverage cartridge in the form of application 09/782,660 (Lazaris et al '724) at (column 4, line 53; Figures 9-11), wherein Lazaris et al '724 teaches a cartridge comprising a base element and cavity containing a beverage raw material, and an edge region, a lid membrane, a filter element dividing the cavity into two regions (Figure 1-6, #16, 12, 14, 28, 38) and the filter element being made from non-woven material (paragraph 0030). Lazaris et al '260 also taught the use of an identifier at an edge region opposite, or below, the membrane (Figure 9, #52d) wherein the identifier individualized the cartridge be permitting insertion into the beverage machine in only two possible orientations (column 4, line 65). Lazaris et al '260 also taught that beverage capsules commonly possessed coded indicia which were

interpreted by machine readers in order to control the beverage process (column 1, lines 35-40).

Claim Rejections - 35 USC § 103

2. The following is a quotation of pre-AIA 35 U.S.C. 103(a) which forms the basis for all obviousness rejections set forth in this Office action:

> (a) A patent may not be obtained though the invention is not identically disclosed or described as set forth in section 102 of this title, if the differences between the subject matter sought to be patented and the prior art are such that the subject matter as a whole would have been obvious at the time the invention was made to a person having ordinary skill in the art to which said subject matter pertains. Patentability shall not be negatived by the manner in which the invention was made.

3. Claim 4 is rejected under pre-AIA 35 U.S.C. 103(a) as being unpatentable over Lazaris et al '260, as evidenced by Lazaris et al '724, and in view of Boyd et al [US 2002/0048621A1].

Lazaris et al '260 teach the abovementioned components. Lazaris et al '260 do not recite the identifier being a ring. Boyd et al teach a beverage capsule comprising an identifier with plural concentric grooves or rings (Figure 2g, #37). It would have been obvious to one of ordinary skill in the art to incorporate the claimed rings into the invention of Lazaris et al '260, in view of Boyd et al, since both are directed to beverage capsules, since Lazaris et al already taught the use of coded indicia which were interpreted by machine readers in order to control the beverage process (column 1, lines 35-40), since concentric rings or grooves were a common form of coded indicia for beverage capsules as shown by Boyd et al (Figure 2g), and since the substitution of

one known element for another would have yielded predictable results to one of ordinary skill in the art.

4. Claims 2-3 and 5 are rejected under pre-AIA 35 U.S.C. 103(a) as being unpatentable over Lazaris et al '260, as evidenced by Lazaris et al '724, and in view of Erlandsson et al [US 2007/0203587A1].

Lazaris et al '260 teach the abovementioned components. Lazaris et al '260 do not recite the identifier being an electrically conductive area (claim 2), an electrically conductive coat (claim 3), or a metallic material (claim 5). Erlandsson et al teach a beverage system comprising an identifier with a printed conduction track (paragraph 0034). It would have been obvious to one of ordinary skill in the art to incorporate the claimed features into the invention of Lazaris et al '260, in view of Erlandsson et al, since both are directed to beverage systems, since Lazaris et al already taught the use of coded indicia which were interpreted by machine readers in order to control the beverage process (column 1, lines 35-40), since printed conduction tracks were a common form of coded indicia for beverage capsules as shown by Ehrandsson et al (paragraph 0034), since metal was a commonly used conductive material, and since the substitution of one known element for another would have yielded predictable results to one of ordinary skill in the art.

Response to Arguments

5. Applicant's arguments with respect to claims 1-7 have been considered but are moot because the arguments do not apply to any of the references being used in the current rejection.

Any inquiry concerning this communication or earlier communications from the examiner should be directed to DREW BECKER whose telephone number is (571)272-1396. The examiner can normally be reached on Mon.-Fri. 9am to 5:30pm.

If attempts to reach the examiner by telephone are unsuccessful, the examiner's supervisor, Rena Dye can be reached on 571-272-3186. The fax phone number for the organization where this application or proceeding is assigned is 571-273-8300.

Information regarding the status of an application may be obtained from the Patent Application Information Retrieval (PAIR) system. Status information for published applications may be obtained from either Private PAIR or Public PAIR. Status information for unpublished applications is available through Private PAIR only. For more information about the PAIR system, see http://pair-direct.uspto.gov. Should you have questions on access to the Private PAIR system, contact the Electronic Business Center (EBC) at 866-217-9197 (toll-free). If you would like assistance from a USPTO Customer Service Representative or access to the automated information system, call 800-786-9199 (IN USA OR CANADA) or 571-272-1000.

/DREW BECKER/
Primary Examiner, Art Unit 1792

Notice of References Cited	Application/Control No. 13/744,623	Applicant(s)/Patent Under Reexamination KRÜGER, MARC	
	Examiner DREW BECKER	Art Unit 1792	Page 1 of 1

U.S. PATENT DOCUMENTS

*		Document Number Country Code-Number-Kind Code	Date MM-YYYY	Name	Classification
*	A	US-6,655,260	12-2003	Lazaris et al.	99/295
*	B	US-2001/0047724	12-2001	Lazaris et al.	99/289.00R
*	C	US-2007/0203587	08-2007	Erlandsson et al.	700/011
*	D	US-2002/0048621	04-2002	Boyd et al.	426/77
*	E	US-2010/0132564	06-2010	Ozanne et al.	99/275
*	F	US-7,444,925	11-2008	Mahlich, Gotthard	99/289P
*	G	US-2008/0302251	12-2008	Rijskamp et al.	99/295
*	H	US-6,994,879	02-2006	Cirigliano et al.	426/433
*	I	US-2014/0141129	05-2014	Greene, Morton	426/87
*	J	US-2013/0312619	11-2013	Spiegel et al.	99/295
*	K	US-2014/0224130	08-2014	Castellani et al.	99/295
*	L	US-2013/0064929	03-2013	Jarisch et al.	426/87
	M	US-			

FOREIGN PATENT DOCUMENTS

*		Document Number Country Code-Number-Kind Code	Date MM-YYYY	Country	Name	Classification
	N	WO 2009/084061A1	07-2009	PCT	Nani	
	O					
	P					
	Q					
	R					
	S					
	T					

NON-PATENT DOCUMENTS

*		Include as applicable: Author, Title Date, Publisher, Edition or Volume, Pertinent Pages)
	U	
	V	
	W	
	X	

*A copy of this reference is not being furnished with this Office action. (See MPEP § 707.05(a).)
Dates in MM-YYYY format are publication dates. Classifications may be US or foreign.

Search Notes	Application/Control No.	Applicant(s)/Patent Under Reexamination
	13744623	KRÜGER ET AL.
	Examiner	**Art Unit**
	DANIEL M PROPSTER	1792

CPC- SEARCHED

Symbol	Date	Examiner
B65D 2081/007, 85/8046; A47J 31/3676-31/3695, 31/4492	9/12/14	deb

CPC COMBINATION SETS - SEARCHED

Symbol	Date	Examiner

US CLASSIFICATION SEARCHED

Class	Subclass	Date	Examiner
426	077	5/16/2013	DMP
426	87,77,79,115,594-597,433,383,394	9/12/14	deb
99	295	9/12/14	deb

SEARCH NOTES

Search Notes	Date	Examiner
Inventor search.	5/16/2013	DMP
EAST text search.	5/16/2013	DMP
EAST/WEST:coffee,tea,beverage,pod,capsule,cartridge,container,identif,control,monitor,adjust,	9/12/14	deb

INTERFERENCE SEARCH

US Class/ CPC Symbol	US Subclass / CPC Group	Date	Examiner

/D.M.P./
Examiner.Art Unit 1792

IPR2024-00304
Nespresso USA, Inc. Ex. 1050
Page 96 of 250

PTO/SB/08a (01-10)
Approved for use through 07/31/2012. OMB 0651-0031
U.S. Patent and Trademark Office; U.S. DEPARTMENT OF COMMERCE
Under the Paperwork Reduction Act of 1995, no persons are required to respond to a collection of information unless it contains a valid OMB control number.

INFORMATION DISCLOSURE STATEMENT BY APPLICANT

(Not for submission under 37 CFR 1.99)

Application Number	13744623
Filing Date	2013-01-18
First Named Inventor	Marc KRÜGER
Art Unit	1792
Examiner Name	PROPSTER, DANIEL M
Attorney Docket Number	26571-0030-C1

U.S.PATENTS Remove

Examiner Initial*	Cite No	Patent Number	Kind Code[1]	Issue Date	Name of Patentee or Applicant of cited Document	Pages,Columns,Lines where Relevant Passages or Relevant Figures Appear
	1					

If you wish to add additional U.S. Patent citation information please click the Add button. Add

U.S.PATENT APPLICATION PUBLICATIONS Remove

Examiner Initial*	Cite No	Publication Number	Kind Code[1]	Publication Date	Name of Patentee or Applicant of cited Document	Pages,Columns,Lines where Relevant Passages or Relevant Figures Appear
	1	20040089158	A1	2004-05-13	Mahlich	

If you wish to add additional U.S. Published Application citation information please click the Add button. Add

FOREIGN PATENT DOCUMENTS Remove

Examiner Initial*	Cite No	Foreign Document Number[3]	Country Code[2] ¡	Kind Code[4]	Publication Date	Name of Patentee or Applicant of cited Document	Pages,Columns,Lines where Relevant Passages or Relevant Figures Appear	T[5]
	1							☐

If you wish to add additional Foreign Patent Document citation information please click the Add button Add

NON-PATENT LITERATURE DOCUMENTS Remove

Examiner Initials*	Cite No	Include name of the author (in CAPITAL LETTERS), title of the article (when appropriate), title of the item (book, magazine, journal, serial, symposium, catalog, etc), date, pages(s), volume-issue number(s), publisher, city and/or country where published.	T[5]

ALL REFERENCES CONSIDERED EXCEPT WHERE LINED THROUGH. /D.B./

Receipt date: 09/12/2013	Application Number	13744623 13744623 - GAU: 1792
INFORMATION DISCLOSURE STATEMENT BY APPLICANT (**Not for submission under 37 CFR 1.99)**	Filing Date	2013-01-18
	First Named Inventor	Marc KRÜGER
	Art Unit	1792
	Examiner Name	PROPSTER, DANIEL M
	Attorney Docket Number	26571-0030-C1

	1		☐

If you wish to add additional non-patent literature document citation information please click the Add button **Add**

EXAMINER SIGNATURE

Examiner Signature	/Drew Becker/	Date Considered	09/12/2014

*EXAMINER: Initial if reference considered, whether or not citation is in conformance with MPEP 609. Draw line through a citation if not in conformance and not considered. Include copy of this form with next communication to applicant.

[1] See Kind Codes of USPTO Patent Documents at www.USPTO.GOV or MPEP 901.04. [2] Enter office that issued the document, by the two-letter code (WIPO Standard ST.3). [3] For Japanese patent documents, the indication of the year of the reign of the Emperor must precede the serial number of the patent document. [4] Kind of document by the appropriate symbols as indicated on the document under WIPO Standard ST.16 if possible. [5] Applicant is to place a check mark here if English language translation is attached.

Receipt date: 09/12/2013	Application Number	13744623 13744623 - GAU: 1792
INFORMATION DISCLOSURE STATEMENT BY APPLICANT (**Not for submission under 37 CFR 1.99)**	Filing Date	2013-01-18
	First Named Inventor	Marc KRÜGER
	Art Unit	1792
	Examiner Name	PROPSTER, DANIEL M
	Attorney Docket Number	26571-0030-C1

CERTIFICATION STATEMENT

Please see 37 CFR 1.97 and 1.98 to make the appropriate selection(s):

☒ That each item of information contained in the information disclosure statement was first cited in any communication from a foreign patent office in a counterpart foreign application not more than three months prior to the filing of the information disclosure statement. See 37 CFR 1.97(e)(1).

OR

☐ That no item of information contained in the information disclosure statement was cited in a communication from a foreign patent office in a counterpart foreign application, and, to the knowledge of the person signing the certification after making reasonable inquiry, no item of information contained in the information disclosure statement was known to any individual designated in 37 CFR 1.56(c) more than three months prior to the filing of the information disclosure statement. See 37 CFR 1.97(e)(2).

☐ See attached certification statement.

☐ The fee set forth in 37 CFR 1.17 (p) has been submitted herewith.

☐ A certification statement is not submitted herewith.

SIGNATURE

A signature of the applicant or representative is required in accordance with CFR 1.33, 10.18. Please see CFR 1.4(d) for the form of the signature.

Signature	/Brian T. Sattizahn/	Date (YYYY-MM-DD)	2013-09-12
Name/Print	Brian T. Sattizahn	Registration Number	46,401

This collection of information is required by 37 CFR 1.97 and 1.98. The information is required to obtain or retain a benefit by the public which is to file (and by the USPTO to process) an application. Confidentiality is governed by 35 U.S.C. 122 and 37 CFR 1.14. This collection is estimated to take 1 hour to complete, including gathering, preparing and submitting the completed application form to the USPTO. Time will vary depending upon the individual case. Any comments on the amount of time you require to complete this form and/or suggestions for reducing this burden, should be sent to the Chief Information Officer, U.S. Patent and Trademark Office, U.S. Department of Commerce, P.O. Box 1450, Alexandria, VA 22313-1450. DO NOT SEND FEES OR COMPLETED FORMS TO THIS ADDRESS. **SEND TO: Commissioner for Patents, P.O. Box 1450, Alexandria, VA 22313-1450.**

Privacy Act Statement

The Privacy Act of 1974 (P.L. 93-579) requires that you be given certain information in connection with your submission of the attached form related to a patent application or patent. Accordingly, pursuant to the requirements of the Act, please be advised that: (1) the general authority for the collection of this information is 35 U.S.C. 2(b)(2); (2) furnishing of the information solicited is voluntary; and (3) the principal purpose for which the information is used by the U.S. Patent and Trademark Office is to process and/or examine your submission related to a patent application or patent. If you do not furnish the requested information, the U.S. Patent and Trademark Office may not be able to process and/or examine your submission, which may result in termination of proceedings or abandonment of the application or expiration of the patent.

The information provided by you in this form will be subject to the following routine uses:

1. The information on this form will be treated confidentially to the extent allowed under the Freedom of Information Act (5 U.S.C. 552) and the Privacy Act (5 U.S.C. 552a). Records from this system of records may be disclosed to the Department of Justice to determine whether the Freedom of Information Act requires disclosure of these record s.

2. A record from this system of records may be disclosed, as a routine use, in the course of presenting evidence to a court, magistrate, or administrative tribunal, including disclosures to opposing counsel in the course of settlement negotiations.

3. A record in this system of records may be disclosed, as a routine use, to a Member of Congress submitting a request involving an individual, to whom the record pertains, when the individual has requested assistance from the Member with respect to the subject matter of the record.

4. A record in this system of records may be disclosed, as a routine use, to a contractor of the Agency having need for the information in order to perform a contract. Recipients of information shall be required to comply with the requirements of the Privacy Act of 1974, as amended, pursuant to 5 U.S.C. 552a(m).

5. A record related to an International Application filed under the Patent Cooperation Treaty in this system of records may be disclosed, as a routine use, to the International Bureau of the World Intellectual Property Organization, pursuant to the Patent Cooperation Treaty.

6. A record in this system of records may be disclosed, as a routine use, to another federal agency for purposes of National Security review (35 U.S.C. 181) and for review pursuant to the Atomic Energy Act (42 U.S.C. 218(c)).

7. A record from this system of records may be disclosed, as a routine use, to the Administrator, General Services, or his/her designee, during an inspection of records conducted by GSA as part of that agency's responsibility to recommend improvements in records management practices and programs, under authority of 44 U.S.C. 2904 and 2906. Such disclosure shall be made in accordance with the GSA regulations governing inspection of records for this purpose, and any other relevant (i.e., GSA or Commerce) directive. Such disclosure shall not be used to make determinations about individuals.

8. A record from this system of records may be disclosed, as a routine use, to the public after either publication of the application pursuant to 35 U.S.C. 122(b) or issuance of a patent pursuant to 35 U.S.C. 151. Further, a record may be disclosed, subject to the limitations of 37 CFR 1.14, as a routine use, to the public if the record was filed in an application which became abandoned or in which the proceedings were terminated and which application is referenced by either a published application, an application open to public inspections or an issued patent.

9. A record from this system of records may be disclosed, as a routine use, to a Federal, State, or local law enforcement agency, if the USPTO becomes aware of a violation or potential violation of law or regulation.

IN THE UNITED STATES PATENT AND TRADEMARK OFFICE

In re Application of:	Marc KRÜGER	Confirmation No.:	8894
Application No.:	13/744,623	Group Art Unit:	1792
Filed:	January 18, 2013	Examiner:	Drew E. BECKER

For: PORTION CAPSULE HAVING AN IDENTIFIER

RESPONSE UNDER 37 C.F.R. 1.111

Mail Stop Amendment
Commissioner for Patents
P.O. Box 1450
Alexandria, VA 22313-1450

Sir:

Please consider the following Response for the above-referenced Application.

INTRODUCTORY COMMENTS

This Response is being submitted in reply to the Office Action dated September 16, 2014.

There are no **Amendments to the Specification** in this Response.

The **Amendments to the Claims** section begins on page 2 of this Response and any amendments to the claims are reflected in the listing of the claims included therein.

There are no **Amendments to the Drawings** in this Response.

The **Remarks** section begins on page 4 of this Response.

IPR2024-00304
Nespresso USA, Inc. Ex. 1050
Page 101 of 250

AMENDMENTS TO THE CLAIMS

This listing of the claims will replace all prior versions, and listings of claims in the Application.

1. (Currently amended) Portion capsule for producing a beverage comprising:

a base element having a cavity in which a beverage raw material is provided~~, the base element comprises an edge region that is attached to the base element, the cavity~~ and which is closed by a membrane ~~connected~~ fastened to the ~~edge region of the~~ base element; and

an identifier ~~provided~~ to individualize the respective portion capsule~~, the identifier is located at the edge region opposite from the membrane~~;

wherein the identifier is provided inside the membrane;

wherein the identifier is a machine-readable imprint.

2. (Cancelled)

3. (Cancelled)

4. (Cancelled)

5. (Cancelled)

6. (Previously presented) Portion capsule according to claim 1, wherein a filter element, which divides the cavity into a first region for accommodating the beverage raw material and a second region for accommodating a beverage extract, is arranged within the cavity.

7. (Previously presented) Portion capsule according to claim 6, wherein the filter element is made of a non-woven material.

8. (Cancelled)

9. (Cancelled)

10. (New) Portion capsule according to claim 1, wherein the portion capsule comprises an edge area attached to the base element.

11. (New) Portion capsule according to claim 10, wherein a sealing surface is provided at the edge area.

12. (New) Portion capsule according to claim 1, wherein the portion capsule comprises a flange attached to the base element.

13. (New) Portion capsule according to claim 12, wherein a sealing surface is provided at the flange.

14. (New) Portion capsule according to claim 1, wherein the portion capsule comprises an edge area and a flange attached to the base element.

15. (New) Portion capsule according to claim 14, wherein a sealing surface is provided at a location selected from the group consisting of at the edge area, at the flange, and a combination thereof.

16. (New) Portion capsule according to claim 1, wherein the identifier is an optically detectable layer in the membrane.

17. (New) Portion capsule according to claim 1, wherein the identifier is a bar-code.

18. (New) Use of a portion capsule according to claim 1 for preparing a hot beverage.

REMARKS

This Response is being submitted in reply to the Office Action dated September 16, 2014.

Upon entry of this Response, claims 1, 6-7, and 10-18 will be pending in the Application. Claims 2-5 and 8-9 have been cancelled. Claims 10-18 are newly added. Support for the amendments and newly added claims can be found, *inter alia*, in at least paragraph [0063] of the published application, and Figure 2 of the specification as originally filed.

In the outstanding Office Action, the Examiner rejected claims 1 and 6-7 under pre-AIA 35 U.S.C. 102(b) as being anticipated by U.S. Patent No. 6,655,260 ("Lazaris '260"), as evidenced by U.S. Patent Application Publication No. 2001/0047724 ("Lazaris '724"); rejected claim 4 under pre-AIA 35 U.S.C. 103(a) as being unpatentable over Lazaris '260, as evidenced by Lazaris '724, in view of U.S. Patent Application Publication No. 2002/0048621 ("Boyd"); and rejected claims 2-3 and 5 under pre-AIA 35 U.S.C. 103(a) as being unpatentable over Lazaris '260, as evidenced by Lazaris '724, in view of U.S. Patent Application Publication No. 2007/0203587 ("Erlandsson").

Reconsideration and allowance of all pending claims is respectfully requested.

REJECTION UNDER 35 U.S.C. 102

The Examiner rejected claim 1 and 6-7 under pre-AIA 35 U.S.C. 102(b) as being anticipated by Lazaris '260, as evidenced by Lazaris '724.

Specifically, the Examiner stated that:

> Lazaris et al '260 teach a beverage cartridge in the form of application 09/782,660 (Lazaris et al '724) at (column 4, line 53; Figures 9-11), wherein Lazaris et al '724 teaches a cartridge comprising a base element and cavity containing a beverage raw material, and an edge region, a lid membrane, a filter element dividing the cavity into two regions (Figure 1-6, #16,12,14,28,38) and the filter element being made from non-woven material (paragraph 0030). Lazaris et al '260 also taught the use of an identifier at an edge region opposite, or below, the membrane (Figure 9, #52d) wherein the identifier individualized the cartridge be permitting insertion into the beverage machine in only two possible orientations (column 4, line 65). Lazaris et al '260 also taught that beverage capsules commonly possessed coded indicia which were interpreted by machine readers in order to control the beverage process (column 1, lines 35-40).

(Office Action, section 1).

The Examiner is reminded that "'[a] claim is anticipated only if each and every element as set forth in the claim is found, either expressly or inherently described, in a single prior art

reference.' *Verdegaal Bros. v. Union Oil Co. of California*, 814 F.2d 628, 631, 2 USPQ2d 1051, 1053 (Fed. Cir. 1987)." *See* Manual of Patent Examining Procedure, 8th Edition (MPEP), Section 2131.

> In addition, "'[t]he identical invention must be shown in as complete detail as is contained in the … claim.' *Richardson v. Suzuki Motor Co.*, 868 F.2d 1226, 1236, 9 USPQ2d 1913, 1920 (Fed. Cir. 1989)." *See* MPEP, Section 2131.

Applicant submits that Lazaris '260, as evidenced by Lazaris '724, fails to describe, either expressly or inherently, "wherein the identifier is provided inside the membrane", as recited in independent claim 1, as currently amended. Instead, Lazaris '260 discloses that "[o]ppositely facing side walls are provided with surface irregularities in the form of protruding somewhat triangular-shaped bosses" (Lazaris '260: col. 4, lines 55-57). As the surface irregularities, which the Examiner considers to be the identifier (Office Action, paragraph spanning pages 2-3), are provided on the side walls, and the side walls are separate from the membrane, the identifier of Lazaris '260, as evidenced by Lazaris '724, is separate from the membrane. Therefore, Lazaris '260, as evidenced by Lazaris '724, fails to disclose or suggest an identifier provided inside the membrane. Thus, independent claim 1, as currently amended, is neither anticipated nor rendered obvious by Lazaris '260, as evidenced by Lazaris '724. Accordingly, Applicant respectfully requests that the Examiner withdraw the rejection and allow the claim.

Dependent claims 6-7 are believed to be distinguishable from Lazaris '260, as evidenced by Lazaris '724, as depending from what is believed to be allowable independent claim 1, as discussed above. In addition, claims 6-7 recite further limitations that distinguish over the applied art. Accordingly, Applicant respectfully requests that the Examiner withdraw the rejection and allow the claims.

In view thereof, Applicant submits that claims 1 and 6-7 are neither anticipated nor rendered obvious by Lazaris '260, as evidenced by Lazaris '724, and are therefore allowable. Accordingly, Applicant respectfully requests that the Examiner withdraw the rejection and allow the claims.

REJECTION UNDER 35 U.S.C. 103

The Examiner rejected claim 4 under pre-AIA 35 U.S.C. 103(a) as being unpatentable over Lazaris '260, as evidenced by Lazaris '724, in view of Boyd; and rejected claims 2-3 and 5 under pre-AIA 35 U.S.C. 103(a) as being unpatentable over Lazaris '260, as evidenced by Lazaris '724,

in view of Erlandsson. Claims 2-5 have been cancelled, thus rendering the rejection of claims 2-5 moot. Accordingly, Applicant respectfully requests that the Examiner withdraw the rejection to claims 2-5.

NEWLY ADDED CLAIMS

Claims 10-18 are newly added by the Response to further define Applicant's invention. It is submitted that no new matter has been added by new claims 10-18 because support for the claims can be found, *inter alia*, in at least Figure 2 of the specification as originally filed, and paragraph [0063] of the published application. Claims 10-18 are believed to be allowable as depending from what is believed to be allowable independent claim 1, as discussed above. In addition, claims 10-18 recite further limitations that distinguish over the applied art.

CONCLUSION

For at least the reasons set forth above, Applicant respectfully requests reconsideration of the Application and withdrawal of any outstanding objections and rejections. As a result of the amendments and remarks presented herein, Applicant respectfully submits that the claims are not anticipated by nor rendered obvious by the applied references or their combination and thus, are in condition for allowance. As the claims are not anticipated by nor rendered obvious in view of the applied art, Applicant requests allowance of all pending claims in a timely manner. If the Examiner believes that prosecution of this Application could be expedited by a telephone conference, the Examiner is encouraged to contact the undersigned.

The Commissioner is hereby authorized to charge any additional fees and credit any overpayments to Deposit Account No. 50-1059.

Respectfully submitted,
McNEES, WALLACE & NURICK

By **/Sean P. Ritchie/**

Sean P. Ritchie
Reg. No. 70,148
100 Pine Street, P.O. Box 1166
Harrisburg, PA 17108-1166
Telephone: (717) 237-5369
Facsimile: (717) 260-1659

Dated: December 15, 2014

Electronic Acknowledgement Receipt

EFS ID:	20959017
Application Number:	13744623
International Application Number:	
Confirmation Number:	8894
Title of Invention:	PORTION CAPSULE HAVING AN IDENTIFIER
First Named Inventor/Applicant Name:	Marc KRÜGER
Customer Number:	26587
Filer:	Sean Patrick Ritchie/Kerri Smith
Filer Authorized By:	Sean Patrick Ritchie
Attorney Docket Number:	26571-0030-C1
Receipt Date:	15-DEC-2014
Filing Date:	18-JAN-2013
Time Stamp:	12:46:15
Application Type:	Utility under 35 USC 111(a)

Payment information:

Submitted with Payment	no

File Listing:

Document Number	Document Description	File Name	File Size(Bytes)/ Message Digest	Multi Part /.zip	Pages (if appl.)
1		A4257404.PDF	119765 d3dd472cbdfcb4c33d9aa157f64b9de43846ff36	yes	6

	Multipart Description/PDF files in .zip description		
	Document Description	**Start**	**End**
	Amendment/Req. Reconsideration-After Non-Final Reject	1	1
	Claims	2	3
	Applicant Arguments/Remarks Made in an Amendment	4	6

Warnings:	
Information:	
Total Files Size (in bytes):	119765

This Acknowledgement Receipt evidences receipt on the noted date by the USPTO of the indicated documents, characterized by the applicant, and including page counts, where applicable. It serves as evidence of receipt similar to a Post Card, as described in MPEP 503.

<u>New Applications Under 35 U.S.C. 111</u>
If a new application is being filed and the application includes the necessary components for a filing date (see 37 CFR 1.53(b)-(d) and MPEP 506), a Filing Receipt (37 CFR 1.54) will be issued in due course and the date shown on this Acknowledgement Receipt will establish the filing date of the application.

<u>National Stage of an International Application under 35 U.S.C. 371</u>
If a timely submission to enter the national stage of an international application is compliant with the conditions of 35 U.S.C. 371 and other applicable requirements a Form PCT/DO/EO/903 indicating acceptance of the application as a national stage submission under 35 U.S.C. 371 will be issued in addition to the Filing Receipt, in due course.

<u>New International Application Filed with the USPTO as a Receiving Office</u>
If a new international application is being filed and the international application includes the necessary components for an international filing date (see PCT Article 11 and MPEP 1810), a Notification of the International Application Number and of the International Filing Date (Form PCT/RO/105) will be issued in due course, subject to prescriptions concerning national security, and the date shown on this Acknowledgement Receipt will establish the international filing date of the application.

PTO/SB/06 (09-11)
Approved for use through 1/31/2014. OMB 0651-0032
U.S. Patent and Trademark Office; U.S. DEPARTMENT OF COMMERCE
Under the Paperwork Reduction Act of 1995, no persons are required to respond to a collection of information unless it displays a valid OMB control number.

PATENT APPLICATION FEE DETERMINATION RECORD

Substitute for Form PTO-875

Application or Docket Number	Filing Date	
13/744,623	01/18/2013	☐ To be Mailed

ENTITY: ☒ LARGE ☐ SMALL ☐ MICRO

APPLICATION AS FILED – PART I

FOR	(Column 1) NUMBER FILED	(Column 2) NUMBER EXTRA	RATE ($)	FEE ($)
☐ BASIC FEE (37 CFR 1.16(a), (b), or (c))	N/A	N/A	N/A	
☐ SEARCH FEE (37 CFR 1.16(k), (i), or (m))	N/A	N/A	N/A	
☐ EXAMINATION FEE (37 CFR 1.16(o), (p), or (q))	N/A	N/A	N/A	
TOTAL CLAIMS (37 CFR 1.16(i))	minus 20 =	*	X $ =	
INDEPENDENT CLAIMS (37 CFR 1.16(h))	minus 3 =	*	X $ =	
☐ APPLICATION SIZE FEE (37 CFR 1.16(s))	If the specification and drawings exceed 100 sheets of paper, the application size fee due is $310 ($155 for small entity) for each additional 50 sheets or fraction thereof. See 35 U.S.C. 41(a)(1)(G) and 37 CFR 1.16(s).			
☐ MULTIPLE DEPENDENT CLAIM PRESENT (37 CFR 1.16(j))				
* If the difference in column 1 is less than zero, enter "0" in column 2.			TOTAL	

APPLICATION AS AMENDED – PART II

AMENDMENT

12/15/2014	(Column 1) CLAIMS REMAINING AFTER AMENDMENT		(Column 2) HIGHEST NUMBER PREVIOUSLY PAID FOR	(Column 3) PRESENT EXTRA	RATE ($)	ADDITIONAL FEE ($)
Total (37 CFR 1.16(i))	* 10	Minus	** 20	=	X $ =	
Independent (37 CFR 1.16(h))	* 1	Minus	***3	=	X $ =	
☐ Application Size Fee (37 CFR 1.16(s))						
☐ FIRST PRESENTATION OF MULTIPLE DEPENDENT CLAIM (37 CFR 1.16(j))						
					TOTAL ADD'L FEE	

AMENDMENT

	(Column 1) CLAIMS REMAINING AFTER AMENDMENT		(Column 2) HIGHEST NUMBER PREVIOUSLY PAID FOR	(Column 3) PRESENT EXTRA	RATE ($)	ADDITIONAL FEE ($)
Total (37 CFR 1.16(i))	*	Minus	**	=	X $ =	
Independent (37 CFR 1.16(h))	*	Minus	***	=	X $ =	
☐ Application Size Fee (37 CFR 1.16(s))						
☐ FIRST PRESENTATION OF MULTIPLE DEPENDENT CLAIM (37 CFR 1.16(j))						
					TOTAL ADD'L FEE	

* If the entry in column 1 is less than the entry in column 2, write "0" in column 3.

** If the "Highest Number Previously Paid For" IN THIS SPACE is less than 20, enter "20".

*** If the "Highest Number Previously Paid For" IN THIS SPACE is less than 3, enter "3".

The "Highest Number Previously Paid For" (Total or Independent) is the highest number found in the appropriate box in column 1.

LIE
/TERRANCE LAWRENCE/

This collection of information is required by 37 CFR 1.16. The information is required to obtain or retain a benefit by the public which is to file (and by the USPTO to process) an application. Confidentiality is governed by 35 U.S.C. 122 and 37 CFR 1.14. This collection is estimated to take 12 minutes to complete, including gathering, preparing, and submitting the completed application form to the USPTO. Time will vary depending upon the individual case. Any comments on the amount of time you require to complete this form and/or suggestions for reducing this burden, should be sent to the Chief Information Officer, U.S. Patent and Trademark Office, U.S. Department of Commerce, P.O. Box 1450, Alexandria, VA 22313-1450. DO NOT SEND FEES OR COMPLETED FORMS TO THIS ADDRESS. **SEND TO: Commissioner for Patents, P.O. Box 1450, Alexandria, VA 22313-1450.**

If you need assistance in completing the form, call 1-800-PTO-9199 and select option 2.

UNITED STATES PATENT AND TRADEMARK OFFICE

UNITED STATES DEPARTMENT OF COMMERCE
United States Patent and Trademark Office
Address: COMMISSIONER FOR PATENTS
P.O. Box 1450
Alexandria, Virginia 22313-1450
www.uspto.gov

APPLICATION NO.	FILING DATE	FIRST NAMED INVENTOR	ATTORNEY DOCKET NO.	CONFIRMATION NO.
13/744,623	01/18/2013	Marc KRÜGER	26571-0030-C1	8894

26587 7590 01/09/2015
MCNEES WALLACE & NURICK LLC
100 PINE STREET
P.O. BOX 1166
HARRISBURG, PA 17108-1166

EXAMINER
BECKER, DREW E

ART UNIT	PAPER NUMBER
1792	

MAIL DATE	DELIVERY MODE
01/09/2015	PAPER

Please find below and/or attached an Office communication concerning this application or proceeding.

The time period for reply, if any, is set in the attached communication.

Office Action Summary	Application No. 13/744,623	Applicant(s) KRÜGER, MARC	
	Examiner DREW BECKER	Art Unit 1792	AIA (First Inventor to File) Status No

-- The MAILING DATE of this communication appears on the cover sheet with the correspondence address --

Period for Reply

A SHORTENED STATUTORY PERIOD FOR REPLY IS SET TO EXPIRE 3 MONTHS FROM THE MAILING DATE OF THIS COMMUNICATION.

- Extensions of time may be available under the provisions of 37 CFR 1.136(a). In no event, however, may a reply be timely filed after SIX (6) MONTHS from the mailing date of this communication.
- If NO period for reply is specified above, the maximum statutory period will apply and will expire SIX (6) MONTHS from the mailing date of this communication.
- Failure to reply within the set or extended period for reply will, by statute, cause the application to become ABANDONED (35 U.S.C. § 133). Any reply received by the Office later than three months after the mailing date of this communication, even if timely filed, may reduce any earned patent term adjustment. See 37 CFR 1.704(b).

Status

1)☒ Responsive to communication(s) filed on 12/15/14.

☐ A declaration(s)/affidavit(s) under **37 CFR 1.130(b)** was/were filed on _____.

2a)☒ This action is **FINAL**. 2b)☐ This action is non-final.

3)☐ An election was made by the applicant in response to a restriction requirement set forth during the interview on _____; the restriction requirement and election have been incorporated into this action.

4)☐ Since this application is in condition for allowance except for formal matters, prosecution as to the merits is closed in accordance with the practice under *Ex parte Quayle*, 1935 C.D. 11, 453 O.G. 213.

Disposition of Claims*

5)☒ Claim(s) 1,6,7 and 10-18 is/are pending in the application.

5a) Of the above claim(s) 18 is/are withdrawn from consideration.

6)☐ Claim(s) _____ is/are allowed.

7)☒ Claim(s) 1, 6-7, 10-17 is/are rejected.

8)☐ Claim(s) _____ is/are objected to.

9)☐ Claim(s) _____ are subject to restriction and/or election requirement.

* If any claims have been determined allowable, you may be eligible to benefit from the **Patent Prosecution Highway** program at a participating intellectual property office for the corresponding application. For more information, please see http://www.uspto.gov/patents/init_events/pph/index.jsp or send an inquiry to PPHfeedback@uspto.gov.

Application Papers

10)☐ The specification is objected to by the Examiner.

11)☐ The drawing(s) filed on _____ is/are: a)☐ accepted or b)☐ objected to by the Examiner.

Applicant may not request that any objection to the drawing(s) be held in abeyance. See 37 CFR 1.85(a).

Replacement drawing sheet(s) including the correction is required if the drawing(s) is objected to. See 37 CFR 1.121(d).

Priority under 35 U.S.C. § 119

12)☐ Acknowledgment is made of a claim for foreign priority under 35 U.S.C. § 119(a)-(d) or (f).

Certified copies:

a)☐ All b)☐ Some** c)☐ None of the:

1.☐ Certified copies of the priority documents have been received.

2.☐ Certified copies of the priority documents have been received in Application No. _____.

3.☐ Copies of the certified copies of the priority documents have been received in this National Stage application from the International Bureau (PCT Rule 17.2(a)).

** See the attached detailed Office action for a list of the certified copies not received.

Attachment(s)

1) ☒ Notice of References Cited (PTO-892)

2) ☐ Information Disclosure Statement(s) (PTO/SB/08a and/or PTO/SB/08b) Paper No(s)/Mail Date _____.

3) ☐ Interview Summary (PTO-413) Paper No(s)/Mail Date. _____ .

4) ☐ Other: _____.

The present application is being examined under the pre-AIA first to invent provisions.

DETAILED ACTION

Election/Restrictions

1. Newly submitted claim 18 is directed to an invention that is independent or distinct from the invention originally claimed for the following reasons: the product of claim 1 can be used to practice another and materially different process, such as producing a non-hot beverage.

Since applicant has received an action on the merits for the originally presented invention, this invention has been constructively elected by original presentation for prosecution on the merits. Accordingly, claim 18 is withdrawn from consideration as being directed to a non-elected invention. See 37 CFR 1.142(b) and MPEP § 821.03.

Claim Rejections - 35 USC § 103

2. The following is a quotation of pre-AIA 35 U.S.C. 103(a) which forms the basis for all obviousness rejections set forth in this Office action:

> (a) A patent may not be obtained though the invention is not identically disclosed or described as set forth in section 102 of this title, if the differences between the subject matter sought to be patented and the prior art are such that the subject matter as a whole would have been obvious at the time the invention was made to a person having ordinary skill in the art to which said subject matter pertains. Patentability shall not be negatived by the manner in which the invention was made.

3. Claims 1, 10, 14, 16-17 are rejected under pre-AIA 35 U.S.C. 103(a) as being unpatentable over Aker [US 2010/0078480A1] in view of Nojima et al [US 2001/0038204A1].

Aker teaches a beverage capsule comprising a base element with a cavity (Figure 2A, #40), a membrane fastened to the edge area of the base element (Figure 2A, #45), and a machine-readable barcode identifier printed on the membrane (Figure 2A, #46).

Aker does not specifically recite the barcode being within the membrane (claim 1), and the barcode being in the membrane (claim 16).

Nojima et al teach a beverage container comprising a membrane label having a clear outer layer (Figure 2, #3) covering a printed layer (Figure 2, #6) which included a barcode (paragraph 0028; Figure 1).

It would have been obvious to one of ordinary skill in the art to incorporate the clear cover of Nojima et al into the invention of Aker since both are directed to beverage containers, since Aker already included a barcode printed on its membrane (Figure 2A, #46), since barcodes were commonly covered by clear films as taught by Nojima et al (Figure 2, #3, 6), and since this clear film would have prevented damage to the barcode of Aker which could leave it smudged or unreadable.

4. Claims 6-7, 11-13, and 15 are rejected under pre-AIA 35 U.S.C. 103(a) as being unpatentable over Aker, in view of Nojima et al, and further in view of Lazaris et al [US 2001/0047724A1].

Aker and Nojima et al teach the above mentioned components. Aker and Nojima et al do not recite a filter element (claim 6), the filter being a non-woven material (claim 7), a sealing surface at the edge area (claim 11, 15), a flange (claim 12), and a sealing surface on the flange (claim 13, 15).

Lazaris et al teach a beverage capsule with a base element (Figure 2, #12), the base element having a flange and edge area with a heat seal (Figure 2, #28; paragraph 0032), a membrane (Figure 2, #16), and a non-woven filter element (Figure 2, #14; paragraph 0030).

It would have been obvious to one of ordinary skill in the art to incorporate the claimed flange, seal, and filter elements into the invention of Aker, in view of Nojima et al and Lazaris et al, since all are directed to beverage capsules and/or containers, since Aker et al already included a base element and membrane but simply did not describe how they were joined or what the internal components were, since beverage capsules commonly included a flange and edge area with a heat seal, a membrane, and a non-woven filter element as shown by Lazaris et al, and since the substitution of one known element for another would have yielded predictable results to one of ordinary skill in the art.

Response to Arguments

5. Applicant's arguments with respect to claims 1, 6-7, 10-17 have been considered but are moot because the arguments do not apply to any of the references being used in the current rejection.

Conclusion

6. Applicant's amendment necessitated the new ground(s) of rejection presented in this Office action. Accordingly, **THIS ACTION IS MADE FINAL**. See MPEP § 706.07(a). Applicant is reminded of the extension of time policy as set forth in 37 CFR 1.136(a).

A shortened statutory period for reply to this final action is set to expire THREE MONTHS from the mailing date of this action. In the event a first reply is filed within TWO MONTHS of the mailing date of this final action and the advisory action is not mailed until after the end of the THREE-MONTH shortened statutory period, then the shortened statutory period will expire on the date the advisory action is mailed, and any extension fee pursuant to 37 CFR 1.136(a) will be calculated from the mailing date of the advisory action. In no event, however, will the statutory period for reply expire later than SIX MONTHS from the date of this final action.

Any inquiry concerning this communication or earlier communications from the examiner should be directed to DREW BECKER whose telephone number is (571)272-1396. The examiner can normally be reached on Mon.-Fri. 9am to 5:30pm.

If attempts to reach the examiner by telephone are unsuccessful, the examiner's supervisor, Rena Dye can be reached on 571-272-3186. The fax phone number for the organization where this application or proceeding is assigned is 571-273-8300.

Information regarding the status of an application may be obtained from the Patent Application Information Retrieval (PAIR) system. Status information for published applications may be obtained from either Private PAIR or Public PAIR. Status information for unpublished applications is available through Private PAIR only. For more information about the PAIR system, see http://pair-direct.uspto.gov. Should you have questions on access to the Private PAIR system, contact the Electronic Business Center (EBC) at 866-217-9197 (toll-free). If you would like assistance from a USPTO Customer Service Representative or access to the automated information system, call 800-786-9199 (IN USA OR CANADA) or 571-272-1000.

/DREW BECKER/
Primary Examiner, Art Unit 1792

Notice of References Cited	Application/Control No. 13/744,623	Applicant(s)/Patent Under Reexamination KRÜGER, MARC	
	Examiner DREW BECKER	Art Unit 1792	Page 1 of 1

U.S. PATENT DOCUMENTS

*		Document Number Country Code-Number-Kind Code	Date MM-YYYY	Name	Classification
*	A	US-2010/0078480	04-2010	AKER, Wynn L.	235/462.08
*	B	US-2001/0038204	11-2001	Nojima et al.	283/81
*	C	US-2002/0048621	04-2002	Boyd et al.	426/77
*	D	US-2001/0047724	12-2001	Lazaris et al.	99/289.00R
	E	US-			
	F	US-			
	G	US-			
	H	US-			
	I	US-			
	J	US-			
	K	US-			
	L	US-			
	M	US-			

FOREIGN PATENT DOCUMENTS

*		Document Number Country Code-Number-Kind Code	Date MM-YYYY	Country	Name	Classification
	N					
	O					
	P					
	Q					
	R					
	S					
	T					

NON-PATENT DOCUMENTS

*		Include as applicable: Author, Title Date, Publisher, Edition or Volume, Pertinent Pages)
	U	
	V	
	W	
	X	

*A copy of this reference is not being furnished with this Office action. (See MPEP § 707.05(a).)
Dates in MM-YYYY format are publication dates. Classifications may be US or foreign.

Search Notes	Application/Control No.	Applicant(s)/Patent Under Reexamination
	13744623	KRÜGER ET AL.
	Examiner	**Art Unit**
	DANIEL M PROPSTER	1792

CPC- SEARCHED

Symbol	Date	Examiner
B65D 2081/007, 85/8046; A47J 31/3676-31/3695, 31/4492	9/12/14	deb
updated	1/8/15	deb

CPC COMBINATION SETS - SEARCHED

Symbol	Date	Examiner

US CLASSIFICATION SEARCHED

Class	Subclass	Date	Examiner
426	077	5/16/2013	DMP
426	87,77,79,115,594-597,433,383,394	9/12/14	deb
99	295	9/12/14	deb
search	updated	1/8/15	deb

SEARCH NOTES

Search Notes	Date	Examiner
Inventor search.	5/16/2013	DMP
EAST text search.	5/16/2013	DMP
EAST/WEST:coffee,tea,beverage,pod,capsule,cartridge,container,identif,control,monitor,adjust,	9/12/14	deb
updated	1/8/15	deb

INTERFERENCE SEARCH

US Class/ CPC Symbol	US Subclass / CPC Group	Date	Examiner

/D.M.P./ Examiner.Art Unit 1792	

IPR2024-00304
Nespresso USA, Inc. Ex. 1050
Page 118 of 250

PTO/SB/08a (01-10)
Approved for use through 07/31/2012. OMB 0651-0031
U.S. Patent and Trademark Office; U.S. DEPARTMENT OF COMMERCE

Under the Paperwork Reduction Act of 1995, no persons are required to respond to a collection of information unless it contains a valid OMB control number.

INFORMATION DISCLOSURE STATEMENT BY APPLICANT

(Not for submission under 37 CFR 1.99)

Application Number	13744623
Filing Date	2013-01-18
First Named Inventor	Marc KRÜGER
Art Unit	1792
Examiner Name	BECKER, DREW E
Attorney Docket Number	26571-0030-C1

U.S.PATENTS Remove

Examiner Initial*	Cite No	Patent Number	Kind Code[1]	Issue Date	Name of Patentee or Applicant of cited Document	Pages,Columns,Lines where Relevant Passages or Relevant Figures Appear
	1					

If you wish to add additional U.S. Patent citation information please click the Add button. Add

U.S.PATENT APPLICATION PUBLICATIONS Remove

Examiner Initial*	Cite No	Publication Number	Kind Code[1]	Publication Date	Name of Patentee or Applicant of cited Document	Pages,Columns,Lines where Relevant Passages or Relevant Figures Appear
	1	20020048621	A1	2002-04-25	Boyd et al.	

If you wish to add additional U.S. Published Application citation information please click the Add button. Add

FOREIGN PATENT DOCUMENTS Remove

Examiner Initial*	Cite No	Foreign Document Number[3]	Country Code[2] ¡	Kind Code[4]	Publication Date	Name of Patentee or Applicant of cited Document	Pages,Columns,Lines where Relevant Passages or Relevant Figures Appear	T[5]
	1	101090657	CN	A	2007-12-19	Kraft Foods R&D Inc.		☐
	2	1849718	EP	A1	2007-10-31	Cafe de Brasil S.p.A.		☐
	3	2006/014936	WO	A2	2006-02-09	Kraft Foods R&D Inc.		☐

INFORMATION DISCLOSURE STATEMENT BY APPLICANT (Not for submission under 37 CFR 1.99)	Application Number	13744623
	Filing Date	2013-01-18
	First Named Inventor	Marc KRÜGER
	Art Unit	1792
	Examiner Name	BECKER, DREW E
	Attorney Docket Number	26571-0030-C1

If you wish to add additional Foreign Patent Document citation information please click the Add button			Add
NON-PATENT LITERATURE DOCUMENTS			Remove
Examiner Initials*	Cite No	Include name of the author (in CAPITAL LETTERS), title of the article (when appropriate), title of the item (book, magazine, journal, serial, symposium, catalog, etc), date, pages(s), volume-issue number(s), publisher, city and/or country where published.	T[5]
	1		☐
If you wish to add additional non-patent literature document citation information please click the Add button			Add

EXAMINER SIGNATURE			
Examiner Signature		Date Considered	

*EXAMINER: Initial if reference considered, whether or not citation is in conformance with MPEP 609. Draw line through a citation if not in conformance and not considered. Include copy of this form with next communication to applicant.

[1] See Kind Codes of USPTO Patent Documents at www.USPTO.GOV or MPEP 901.04. [2] Enter office that issued the document, by the two-letter code (WIPO Standard ST.3). [3] For Japanese patent documents, the indication of the year of the reign of the Emperor must precede the serial number of the patent document. [4] Kind of document by the appropriate symbols as indicated on the document under WIPO Standard ST.16 if possible. [5] Applicant is to place a check mark here if English language translation is attached.

INFORMATION DISCLOSURE STATEMENT BY APPLICANT (Not for submission under 37 CFR 1.99)		
	Application Number	13744623
	Filing Date	2013-01-18
	First Named Inventor	Marc KRÜGER
	Art Unit	1792
	Examiner Name	BECKER, DREW E
	Attorney Docket Number	26571-0030-C1

CERTIFICATION STATEMENT

Please see 37 CFR 1.97 and 1.98 to make the appropriate selection(s):

☒ That each item of information contained in the information disclosure statement was first cited in any communication from a foreign patent office in a counterpart foreign application not more than three months prior to the filing of the information disclosure statement. See 37 CFR 1.97(e)(1).

OR

☐ That no item of information contained in the information disclosure statement was cited in a communication from a foreign patent office in a counterpart foreign application, and, to the knowledge of the person signing the certification after making reasonable inquiry, no item of information contained in the information disclosure statement was known to any individual designated in 37 CFR 1.56(c) more than three months prior to the filing of the information disclosure statement. See 37 CFR 1.97(e)(2).

☐ See attached certification statement.

☒ The fee set forth in 37 CFR 1.17 (p) has been submitted herewith.

☐ A certification statement is not submitted herewith.

SIGNATURE

A signature of the applicant or representative is required in accordance with CFR 1.33, 10.18. Please see CFR 1.4(d) for the form of the signature.

Signature	/Geoffrey K. White/	Date (YYYY-MM-DD)	2015-01-14
Name/Print	Geoffrey K. White	Registration Number	62,684

This collection of information is required by 37 CFR 1.97 and 1.98. The information is required to obtain or retain a benefit by the public which is to file (and by the USPTO to process) an application. Confidentiality is governed by 35 U.S.C. 122 and 37 CFR 1.14. This collection is estimated to take 1 hour to complete, including gathering, preparing and submitting the completed application form to the USPTO. Time will vary depending upon the individual case. Any comments on the amount of time you require to complete this form and/or suggestions for reducing this burden, should be sent to the Chief Information Officer, U.S. Patent and Trademark Office, U.S. Department of Commerce, P.O. Box 1450, Alexandria, VA 22313-1450. DO NOT SEND FEES OR COMPLETED FORMS TO THIS ADDRESS. **SEND TO: Commissioner for Patents, P.O. Box 1450, Alexandria, VA 22313-1450.**

Privacy Act Statement

The Privacy Act of 1974 (P.L. 93-579) requires that you be given certain information in connection with your submission of the attached form related to a patent application or patent. Accordingly, pursuant to the requirements of the Act, please be advised that: (1) the general authority for the collection of this information is 35 U.S.C. 2(b)(2); (2) furnishing of the information solicited is voluntary; and (3) the principal purpose for which the information is used by the U.S. Patent and Trademark Office is to process and/or examine your submission related to a patent application or patent. If you do not furnish the requested information, the U.S. Patent and Trademark Office may not be able to process and/or examine your submission, which may result in termination of proceedings or abandonment of the application or expiration of the patent.

The information provided by you in this form will be subject to the following routine uses:

1. The information on this form will be treated confidentially to the extent allowed under the Freedom of Information Act (5 U.S.C. 552) and the Privacy Act (5 U.S.C. 552a). Records from this system of records may be disclosed to the Department of Justice to determine whether the Freedom of Information Act requires disclosure of these record s.

2. A record from this system of records may be disclosed, as a routine use, in the course of presenting evidence to a court, magistrate, or administrative tribunal, including disclosures to opposing counsel in the course of settlement negotiations.

3. A record in this system of records may be disclosed, as a routine use, to a Member of Congress submitting a request involving an individual, to whom the record pertains, when the individual has requested assistance from the Member with respect to the subject matter of the record.

4. A record in this system of records may be disclosed, as a routine use, to a contractor of the Agency having need for the information in order to perform a contract. Recipients of information shall be required to comply with the requirements of the Privacy Act of 1974, as amended, pursuant to 5 U.S.C. 552a(m).

5. A record related to an International Application filed under the Patent Cooperation Treaty in this system of records may be disclosed, as a routine use, to the International Bureau of the World Intellectual Property Organization, pursuant to the Patent Cooperation Treaty.

6. A record in this system of records may be disclosed, as a routine use, to another federal agency for purposes of National Security review (35 U.S.C. 181) and for review pursuant to the Atomic Energy Act (42 U.S.C. 218(c)).

7. A record from this system of records may be disclosed, as a routine use, to the Administrator, General Services, or his/her designee, during an inspection of records conducted by GSA as part of that agency's responsibility to recommend improvements in records management practices and programs, under authority of 44 U.S.C. 2904 and 2906. Such disclosure shall be made in accordance with the GSA regulations governing inspection of records for this purpose, and any other relevant (i.e., GSA or Commerce) directive. Such disclosure shall not be used to make determinations about individuals.

8. A record from this system of records may be disclosed, as a routine use, to the public after either publication of the application pursuant to 35 U.S.C. 122(b) or issuance of a patent pursuant to 35 U.S.C. 151. Further, a record may be disclosed, subject to the limitations of 37 CFR 1.14, as a routine use, to the public if the record was filed in an application which became abandoned or in which the proceedings were terminated and which application is referenced by either a published application, an application open to public inspections or an issued patent.

9. A record from this system of records may be disclosed, as a routine use, to a Federal, State, or local law enforcement agency, if the USPTO becomes aware of a violation or potential violation of law or regulation.

Electronic Patent Application Fee Transmittal

Application Number:	13744623
Filing Date:	18-Jan-2013
Title of Invention:	PORTION CAPSULE HAVING AN IDENTIFIER
First Named Inventor/Applicant Name:	Marc KRÜGER
Filer:	Geoffrey Keith White/Kerri Smith
Attorney Docket Number:	26571-0030-C1

Filed as Large Entity

Filing Fees for **Utility under 35 USC 111(a)**

Description	Fee Code	Quantity	Amount	Sub-Total in USD($)
Basic Filing:				
Pages:				
Claims:				
Miscellaneous-Filing:				
Petition:				
Patent-Appeals-and-Interference:				
Post-Allowance-and-Post-Issuance:				
Extension-of-Time:				

Description	Fee Code	Quantity	Amount	Sub-Total in USD($)
Miscellaneous:				
Submission- Information Disclosure Stmt	1806	1	180	180
		Total in USD ($)		**180**

Electronic Acknowledgement Receipt

EFS ID:	21211068
Application Number:	13744623
International Application Number:	
Confirmation Number:	8894
Title of Invention:	PORTION CAPSULE HAVING AN IDENTIFIER
First Named Inventor/Applicant Name:	Marc KRÜGER
Customer Number:	26587
Filer:	Geoffrey Keith White/Kerri Smith
Filer Authorized By:	Geoffrey Keith White
Attorney Docket Number:	26571-0030-C1
Receipt Date:	14-JAN-2015
Filing Date:	18-JAN-2013
Time Stamp:	17:02:43
Application Type:	Utility under 35 USC 111(a)

Payment information:

Submitted with Payment	yes
Payment Type	Deposit Account
Payment was successfully received in RAM	$180
RAM confirmation Number	3658
Deposit Account	501059
Authorized User	

The Director of the USPTO is hereby authorized to charge indicated fees and credit any overpayment as follows:

Charge any Additional Fees required under 37 C.F.R. Section 1.16 (National application filing, search, and examination fees)

Charge any Additional Fees required under 37 C.F.R. Section 1.17 (Patent application and reexamination processing fees)

Charge any Additional Fees required under 37 C.F.R. Section 1.19 (Document supply fees)

Charge any Additional Fees required under 37 C.F.R. Section 1.20 (Post Issuance fees)

Charge any Additional Fees required under 37 C.F.R. Section 1.21 (Miscellaneous fees and charges)

File Listing:

Document Number	Document Description	File Name	File Size(Bytes)/ Message Digest	Multi Part /.zip	Pages (if appl.)
1	Information Disclosure Statement (IDS) Form (SB08)	A4298509.PDF	612342 4aab4ba8fe4baa534a192c3c04d7c92b8afe49df	no	4
Warnings:					
Information:					
2	Foreign Reference	A4298482.PDF	13237434 2d8c6279383a1b48cf40921e90759bac305662e6	no	10
Warnings:					
Information:					
3	Foreign Reference	A4299959.PDF	3113965 83ceb2b7fb7b5e6ab792858496c4732b72d1c962	no	60
Warnings:					
Information:					
4	Foreign Reference	A4299957.PDF	2698244 ac52bac1a522a7703d3eef0fc3d5e3abed9d3416	no	46
Warnings:					
Information:					
5	Fee Worksheet (SB06)	fee-info.pdf	30686 42e0c4ae783cab7e9f855c8469796d6e7ff7d7b6	no	2
Warnings:					
Information:					
			Total Files Size (in bytes):	19692671	

This Acknowledgement Receipt evidences receipt on the noted date by the USPTO of the indicated documents, characterized by the applicant, and including page counts, where applicable. It serves as evidence of receipt similar to a Post Card, as described in MPEP 503.

New Applications Under 35 U.S.C. 111
If a new application is being filed and the application includes the necessary components for a filing date (see 37 CFR 1.53(b)-(d) and MPEP 506), a Filing Receipt (37 CFR 1.54) will be issued in due course and the date shown on this Acknowledgement Receipt will establish the filing date of the application.

National Stage of an International Application under 35 U.S.C. 371
If a timely submission to enter the national stage of an international application is compliant with the conditions of 35 U.S.C. 371 and other applicable requirements a Form PCT/DO/EO/903 indicating acceptance of the application as a national stage submission under 35 U.S.C. 371 will be issued in addition to the Filing Receipt, in due course.

New International Application Filed with the USPTO as a Receiving Office
If a new international application is being filed and the international application includes the necessary components for an international filing date (see PCT Article 11 and MPEP 1810), a Notification of the International Application Number and of the International Filing Date (Form PCT/RO/105) will be issued in due course, subject to prescriptions concerning national security, and the date shown on this Acknowledgement Receipt will establish the international filing date of the application.

PTO/SB/08a (01-10)
Approved for use through 07/31/2012. OMB 0651-0031
U.S. Patent and Trademark Office; U.S. DEPARTMENT OF COMMERCE

Under the Paperwork Reduction Act of 1995, no persons are required to respond to a collection of information unless it contains a valid OMB control number.

INFORMATION DISCLOSURE STATEMENT BY APPLICANT

(Not for submission under 37 CFR 1.99)

Application Number	13744623
Filing Date	2013-01-18
First Named Inventor	Marc KRÜGER
Art Unit	1792
Examiner Name	BECKER, DREW E.
Attorney Docket Number	26571-0030-C1

U.S.PATENTS Remove

Examiner Initial*	Cite No	Patent Number	Kind Code[1]	Issue Date	Name of Patentee or Applicant of cited Document	Pages,Columns,Lines where Relevant Passages or Relevant Figures Appear
	1					

If you wish to add additional U.S. Patent citation information please click the Add button. Add

U.S.PATENT APPLICATION PUBLICATIONS Remove

Examiner Initial*	Cite No	Publication Number	Kind Code[1]	Publication Date	Name of Patentee or Applicant of cited Document	Pages,Columns,Lines where Relevant Passages or Relevant Figures Appear
	1	20020048621	A1	2002-04-25	Boyd et al.	
	2	20030172813	A1	2003-09-18	Schifferle	
	3	20120060697	A1	2012-03-15	Ozanne	

If you wish to add additional U.S. Published Application citation information please click the Add button. Add

FOREIGN PATENT DOCUMENTS Remove

Examiner Initial*	Cite No	Foreign Document Number[3]	Country Code[2] ¡	Kind Code[4]	Publication Date	Name of Patentee or Applicant of cited Document	Pages,Columns,Lines where Relevant Passages or Relevant Figures Appear	T[5]
	1	2003265320	JP		2003-09-24	SCHIFFERLE, RENE		☐

INFORMATION DISCLOSURE STATEMENT BY APPLICANT (Not for submission under 37 CFR 1.99)	Application Number	13744623
	Filing Date	2013-01-18
	First Named Inventor	Marc KRÜGER
	Art Unit	1792
	Examiner Name	BECKER, DREW E.
	Attorney Docket Number	26571-0030-C1

	2	2009511143	JP		2009-03-19			☐

If you wish to add additional Foreign Patent Document citation information please click the Add button Add

NON-PATENT LITERATURE DOCUMENTS Remove

Examiner Initials*	Cite No	Include name of the author (in CAPITAL LETTERS), title of the article (when appropriate), title of the item (book, magazine, journal, serial, symposium, catalog, etc), date, pages(s), volume-issue number(s), publisher, city and/or country where published.	T[5]
	1	Translation of Japanese Office Action, Application No. 2013-520009, dated December 16, 2014	☐

If you wish to add additional non-patent literature document citation information please click the Add button Add

EXAMINER SIGNATURE

Examiner Signature		Date Considered	

*EXAMINER: Initial if reference considered, whether or not citation is in conformance with MPEP 609. Draw line through a citation if not in conformance and not considered. Include copy of this form with next communication to applicant.

[1] See Kind Codes of USPTO Patent Documents at www.USPTO.GOV or MPEP 901.04. [2] Enter office that issued the document, by the two-letter code (WIPO Standard ST.3). [3] For Japanese patent documents, the indication of the year of the reign of the Emperor must precede the serial number of the patent document. [4] Kind of document by the appropriate symbols as indicated on the document under WIPO Standard ST.16 if possible. [5] Applicant is to place a check mark here if English language translation is attached.

INFORMATION DISCLOSURE STATEMENT BY APPLICANT (Not for submission under 37 CFR 1.99)	Application Number	13744623
	Filing Date	2013-01-18
	First Named Inventor	Marc KRÜGER
	Art Unit	1792
	Examiner Name	BECKER, DREW E.
	Attorney Docket Number	26571-0030-C1

CERTIFICATION STATEMENT

Please see 37 CFR 1.97 and 1.98 to make the appropriate selection(s):

☒ That each item of information contained in the information disclosure statement was first cited in any communication from a foreign patent office in a counterpart foreign application not more than three months prior to the filing of the information disclosure statement. See 37 CFR 1.97(e)(1).

OR

☐ That no item of information contained in the information disclosure statement was cited in a communication from a foreign patent office in a counterpart foreign application, and, to the knowledge of the person signing the certification after making reasonable inquiry, no item of information contained in the information disclosure statement was known to any individual designated in 37 CFR 1.56(c) more than three months prior to the filing of the information disclosure statement. See 37 CFR 1.97(e)(2).

☐ See attached certification statement.

☒ The fee set forth in 37 CFR 1.17 (p) has been submitted herewith.

☐ A certification statement is not submitted herewith.

SIGNATURE

A signature of the applicant or representative is required in accordance with CFR 1.33, 10.18. Please see CFR 1.4(d) for the form of the signature.

Signature	/Geoffrey K. White/	Date (YYYY-MM-DD)	2015-02-27
Name/Print	Geoffrey K. White	Registration Number	62,684

This collection of information is required by 37 CFR 1.97 and 1.98. The information is required to obtain or retain a benefit by the public which is to file (and by the USPTO to process) an application. Confidentiality is governed by 35 U.S.C. 122 and 37 CFR 1.14. This collection is estimated to take 1 hour to complete, including gathering, preparing and submitting the completed application form to the USPTO. Time will vary depending upon the individual case. Any comments on the amount of time you require to complete this form and/or suggestions for reducing this burden, should be sent to the Chief Information Officer, U.S. Patent and Trademark Office, U.S. Department of Commerce, P.O. Box 1450, Alexandria, VA 22313-1450. DO NOT SEND FEES OR COMPLETED FORMS TO THIS ADDRESS. **SEND TO: Commissioner for Patents, P.O. Box 1450, Alexandria, VA 22313-1450.**

Privacy Act Statement

The Privacy Act of 1974 (P.L. 93-579) requires that you be given certain information in connection with your submission of the attached form related to a patent application or patent. Accordingly, pursuant to the requirements of the Act, please be advised that: (1) the general authority for the collection of this information is 35 U.S.C. 2(b)(2); (2) furnishing of the information solicited is voluntary; and (3) the principal purpose for which the information is used by the U.S. Patent and Trademark Office is to process and/or examine your submission related to a patent application or patent. If you do not furnish the requested information, the U.S. Patent and Trademark Office may not be able to process and/or examine your submission, which may result in termination of proceedings or abandonment of the application or expiration of the patent.

The information provided by you in this form will be subject to the following routine uses:

1. The information on this form will be treated confidentially to the extent allowed under the Freedom of Information Act (5 U.S.C. 552) and the Privacy Act (5 U.S.C. 552a). Records from this system of records may be disclosed to the Department of Justice to determine whether the Freedom of Information Act requires disclosure of these record s.

2. A record from this system of records may be disclosed, as a routine use, in the course of presenting evidence to a court, magistrate, or administrative tribunal, including disclosures to opposing counsel in the course of settlement negotiations.

3. A record in this system of records may be disclosed, as a routine use, to a Member of Congress submitting a request involving an individual, to whom the record pertains, when the individual has requested assistance from the Member with respect to the subject matter of the record.

4. A record in this system of records may be disclosed, as a routine use, to a contractor of the Agency having need for the information in order to perform a contract. Recipients of information shall be required to comply with the requirements of the Privacy Act of 1974, as amended, pursuant to 5 U.S.C. 552a(m).

5. A record related to an International Application filed under the Patent Cooperation Treaty in this system of records may be disclosed, as a routine use, to the International Bureau of the World Intellectual Property Organization, pursuant to the Patent Cooperation Treaty.

6. A record in this system of records may be disclosed, as a routine use, to another federal agency for purposes of National Security review (35 U.S.C. 181) and for review pursuant to the Atomic Energy Act (42 U.S.C. 218(c)).

7. A record from this system of records may be disclosed, as a routine use, to the Administrator, General Services, or his/her designee, during an inspection of records conducted by GSA as part of that agency's responsibility to recommend improvements in records management practices and programs, under authority of 44 U.S.C. 2904 and 2906. Such disclosure shall be made in accordance with the GSA regulations governing inspection of records for this purpose, and any other relevant (i.e., GSA or Commerce) directive. Such disclosure shall not be used to make determinations about individuals.

8. A record from this system of records may be disclosed, as a routine use, to the public after either publication of the application pursuant to 35 U.S.C. 122(b) or issuance of a patent pursuant to 35 U.S.C. 151. Further, a record may be disclosed, subject to the limitations of 37 CFR 1.14, as a routine use, to the public if the record was filed in an application which became abandoned or in which the proceedings were terminated and which application is referenced by either a published application, an application open to public inspections or an issued patent.

9. A record from this system of records may be disclosed, as a routine use, to a Federal, State, or local law enforcement agency, if the USPTO becomes aware of a violation or potential violation of law or regulation.

Electronic Patent Application Fee Transmittal

Application Number:	13744623
Filing Date:	18-Jan-2013
Title of Invention:	PORTION CAPSULE HAVING AN IDENTIFIER
First Named Inventor/Applicant Name:	Marc KRÜGER
Filer:	Geoffrey Keith White/Kerri Smith
Attorney Docket Number:	26571-0030-C1

Filed as Large Entity

Filing Fees for **Utility under 35 USC 111(a)**

Description	Fee Code	Quantity	Amount	Sub-Total in USD($)
Basic Filing:				
Pages:				
Claims:				
Miscellaneous-Filing:				
Petition:				
Patent-Appeals-and-Interference:				
Post-Allowance-and-Post-Issuance:				
Extension-of-Time:				

Description	Fee Code	Quantity	Amount	Sub-Total in USD($)
Miscellaneous:				
Submission- Information Disclosure Stmt	1806	1	180	180
		Total in USD ($)		**180**

Electronic Acknowledgement Receipt

EFS ID:	21635469
Application Number:	13744623
International Application Number:	
Confirmation Number:	8894
Title of Invention:	PORTION CAPSULE HAVING AN IDENTIFIER
First Named Inventor/Applicant Name:	Marc KRÜGER
Customer Number:	26587
Filer:	Geoffrey Keith White/Kerri Smith
Filer Authorized By:	Geoffrey Keith White
Attorney Docket Number:	26571-0030-C1
Receipt Date:	02-MAR-2015
Filing Date:	18-JAN-2013
Time Stamp:	12:48:48
Application Type:	Utility under 35 USC 111(a)

Payment information:

Submitted with Payment	yes
Payment Type	Deposit Account
Payment was successfully received in RAM	$180
RAM confirmation Number	11548
Deposit Account	501059
Authorized User	

The Director of the USPTO is hereby authorized to charge indicated fees and credit any overpayment as follows:

Charge any Additional Fees required under 37 C.F.R. Section 1.16 (National application filing, search, and examination fees)

Charge any Additional Fees required under 37 C.F.R. Section 1.17 (Patent application and reexamination processing fees)

Charge any Additional Fees required under 37 C.F.R. Section 1.19 (Document supply fees)

Charge any Additional Fees required under 37 C.F.R. Section 1.20 (Post Issuance fees)

Charge any Additional Fees required under 37 C.F.R. Section 1.21 (Miscellaneous fees and charges)

File Listing:

Document Number	Document Description	File Name	File Size(Bytes)/ Message Digest	Multi Part /.zip	Pages (if appl.)
1	Information Disclosure Statement (IDS) Form (SB08)	A4367020.PDF	612537 9130b0da2387766127f4a95426df431b1ee4a0cf	no	4
Warnings:					
Information:					
2	Foreign Reference	A4366943.PDF	16576203 6bd7537007b30123f538f4c495cb005e72627dba	no	28
Warnings:					
Information:					
3	Non Patent Literature	A4367015.PDF	3321237 4fb67e0105e36689e364820334df502bb2db00a0	no	3
Warnings:					
Information:					
4	Foreign Reference	A4368692.PDF	323703 9e593d686df48e4e61207ef78c0aa421ca494dbe	no	11
Warnings:					
Information:					
5	Fee Worksheet (SB06)	fee-info.pdf	30686 14649703f93797ea865bbff723180b2b32aee7ef	no	2
Warnings:					
Information:					
			Total Files Size (in bytes):	20864366	

This Acknowledgement Receipt evidences receipt on the noted date by the USPTO of the indicated documents, characterized by the applicant, and including page counts, where applicable. It serves as evidence of receipt similar to a Post Card, as described in MPEP 503.

New Applications Under 35 U.S.C. 111
If a new application is being filed and the application includes the necessary components for a filing date (see 37 CFR 1.53(b)-(d) and MPEP 506), a Filing Receipt (37 CFR 1.54) will be issued in due course and the date shown on this Acknowledgement Receipt will establish the filing date of the application.

National Stage of an International Application under 35 U.S.C. 371
If a timely submission to enter the national stage of an international application is compliant with the conditions of 35 U.S.C. 371 and other applicable requirements a Form PCT/DO/EO/903 indicating acceptance of the application as a national stage submission under 35 U.S.C. 371 will be issued in addition to the Filing Receipt, in due course.

New International Application Filed with the USPTO as a Receiving Office
If a new international application is being filed and the international application includes the necessary components for an international filing date (see PCT Article 11 and MPEP 1810), a Notification of the International Application Number and of the International Filing Date (Form PCT/RO/105) will be issued in due course, subject to prescriptions concerning national security, and the date shown on this Acknowledgement Receipt will establish the international filing date of the application.

PTO/SB/30EFS (07-09)
Approved for use through 07/31/2012. OMB 0651-0031
U.S. Patent and Trademark Office; U.S. DEPARTMENT OF COMMERCE
Under the Paperwork Reduction Act of 1995, no persons are required to respond to a collection of information unless it contains a valid OMB control number.

REQUEST FOR CONTINUED EXAMINATION(RCE)TRANSMITTAL
(Submitted Only via EFS-Web)

Application Number	13/744,623	Filing Date	2013-01-18	Docket Number (if applicable)	KRU0022WOUS/26571-0030	Art Unit	1792
First Named Inventor	Marc KRÜGER			Examiner Name	Drew E. BECKER		

This is a Request for Continued Examination (RCE) under 37 CFR 1.114 of the above-identified application.
Request for Continued Examination (RCE) practice under 37 CFR 1.114 does not apply to any utility or plant application filed prior to June 8, 1995, or to any design application. The Instruction Sheet for this form is located at WWW.USPTO.GOV

SUBMISSION REQUIRED UNDER 37 CFR 1.114

Note: If the RCE is proper, any previously filed unentered amendments and amendments enclosed with the RCE will be entered in the order in which they were filed unless applicant instructs otherwise. If applicant does not wish to have any previously filed unentered amendment(s) entered, applicant must request non-entry of such amendment(s).

☐ Previously submitted. If a final Office action is outstanding, any amendments filed after the final Office action may be considered as a submission even if this box is not checked.

- ☐ Consider the arguments in the Appeal Brief or Reply Brief previously filed on _____
- ☐ Other _____

☒ Enclosed

- ☒ Amendment/Reply
- ☐ Information Disclosure Statement (IDS)
- ☐ Affidavit(s)/ Declaration(s)
- ☐ Other _____

MISCELLANEOUS

☐ Suspension of action on the above-identified application is requested under 37 CFR 1.103(c) for a period of months _____
(Period of suspension shall not exceed 3 months; Fee under 37 CFR 1.17(i) required)

☐ Other _____

FEES

The RCE fee under 37 CFR 1.17(e) is required by 37 CFR 1.114 when the RCE is filed.
☒ The Director is hereby authorized to charge any underpayment of fees, or credit any overpayments, to Deposit Account No 501059

SIGNATURE OF APPLICANT, ATTORNEY, OR AGENT REQUIRED

☒ Patent Practitioner Signature
☐ Applicant Signature

PTO/SB/30EFS (07-09)
Approved for use through 07/31/2012. OMB 0651-0031
U.S. Patent and Trademark Office; U.S. DEPARTMENT OF COMMERCE
Under the Paperwork Reduction Act of 1995, no persons are required to respond to a collection of information unless it contains a valid OMB control number.

Signature of Registered U.S. Patent Practitioner			
Signature	/Sean P. Ritchie/	Date (YYYY-MM-DD)	2015-04-09
Name	Sean P. Ritchie	Registration Number	70148

This collection of information is required by 37 CFR 1.114. The information is required to obtain or retain a benefit by the public which is to file (and by the USPTO to process) an application. Confidentiality is governed by 35 U.S.C. 122 and 37 CFR 1.11 and 1.14. This collection is estimated to take 12 minutes to complete, including gathering, preparing, and submitting the completed application form to the USPTO. Time will vary depending upon the individual case. Any comments on the amount of time you require to complete this form and/or suggestions for reducing this burden, should be sent to the Chief Information Officer, U.S. Patent and Trademark Office, U.S. Department of Commerce, P.O. Box 1450, Alexandria, VA 22313-1450.

If you need assistance in completing the form, call 1-800-PTO-9199 and select option 2.

Privacy Act Statement

The Privacy Act of 1974 (P.L. 93-579) requires that you be given certain information in connection with your submission of the attached form related to a patent application or patent. Accordingly, pursuant to the requirements of the Act, please be advised that: (1) the general authority for the collection of this information is 35 U.S.C. 2(b)(2); (2) furnishing of the information solicited is voluntary; and (3) the principal purpose for which the information is used by the U.S. Patent and Trademark Office is to process and/or examine your submission related to a patent application or patent. If you do not furnish the requested information, the U.S. Patent and Trademark Office may not be able to process and/or examine your submission, which may result in termination of proceedings or abandonment of the application or expiration of the patent.

The information provided by you in this form will be subject to the following routine uses:

1. The information on this form will be treated confidentially to the extent allowed under the Freedom of Information Act (5 U.S.C. 552) and the Privacy Act (5 U.S.C. 552a). Records from this system of records may be disclosed to the Department of Justice to determine whether the Freedom of Information Act requires disclosure of these records.

2. A record from this system of records may be disclosed, as a routine use, in the course of presenting evidence to a court, magistrate, or administrative tribunal, including disclosures to opposing counsel in the course of settlement negotiations.

3. A record in this system of records may be disclosed, as a routine use, to a Member of Congress submitting a request involving an individual, to whom the record pertains, when the individual has requested assistance from the Member with respect to the subject matter of the record.

4. A record in this system of records may be disclosed, as a routine use, to a contractor of the Agency having need for the information in order to perform a contract. Recipients of information shall be required to comply with the requirements of the Privacy Act of 1974, as amended, pursuant to 5 U.S.C. 552a(m).

5. A record related to an International Application filed under the Patent Cooperation Treaty in this system of records may be disclosed, as a routine use, to the International Bureau of the World Intellectual Property Organization, pursuant to the Patent Cooperation Treaty.

6. A record in this system of records may be disclosed, as a routine use, to another federal agency for purposes of National Security review (35 U.S.C. 181) and for review pursuant to the Atomic Energy Act (42 U.S.C. 218(c)).

7. A record from this system of records may be disclosed, as a routine use, to the Administrator, General Services, or his/her designee, during an inspection of records conducted by GSA as part of that agency's responsibility to recommend improvements in records management practices and programs, under authority of 44 U.S.C. 2904 and 2906. Such disclosure shall be made in accordance with the GSA regulations governing inspection of records for this purpose, and any other relevant (i.e., GSA or Commerce) directive. Such disclosure shall not be used to make determinations about individuals.

8. A record from this system of records may be disclosed, as a routine use, to the public after either publication of the application pursuant to 35 U.S.C. 122(b) or issuance of a patent pursuant to 35 U.S.C. 151. Further, a record may be disclosed, subject to the limitations of 37 CFR 1.14, as a routine use, to the public if the record was filed in an application which became abandoned or in which the proceedings were terminated and which application is referenced by either a published application, an application open to public inspections or an issued patent.

9. A record from this system of records may be disclosed, as a routine use, to a Federal, State, or local law enforcement agency, if the USPTO becomes aware of a violation or potential violation of law or regulation.

Electronic Patent Application Fee Transmittal

Application Number:	13744623
Filing Date:	18-Jan-2013
Title of Invention:	PORTION CAPSULE HAVING AN IDENTIFIER
First Named Inventor/Applicant Name:	Marc KRÜGER
Filer:	Sean Patrick Ritchie/Kerri Smith
Attorney Docket Number:	26571-0030-C1

Filed as Large Entity

Filing Fees for **Utility under 35 USC 111(a)**

Description	Fee Code	Quantity	Amount	Sub-Total in USD($)
Basic Filing:				
Pages:				
Claims:				
Miscellaneous-Filing:				
Petition:				
Patent-Appeals-and-Interference:				
Post-Allowance-and-Post-Issuance:				
Extension-of-Time:				

Description	Fee Code	Quantity	Amount	Sub-Total in USD($)
Miscellaneous:				
Request for Continued Examination	1801	1	1200	1200
		Total in USD ($)		**1200**

Electronic Acknowledgement Receipt

EFS ID:	22014511
Application Number:	13744623
International Application Number:	
Confirmation Number:	8894
Title of Invention:	PORTION CAPSULE HAVING AN IDENTIFIER
First Named Inventor/Applicant Name:	Marc KRÜGER
Customer Number:	26587
Filer:	Sean Patrick Ritchie/Kerri Smith
Filer Authorized By:	Sean Patrick Ritchie
Attorney Docket Number:	26571-0030-C1
Receipt Date:	09-APR-2015
Filing Date:	18-JAN-2013
Time Stamp:	13:17:45
Application Type:	Utility under 35 USC 111(a)

Payment information:

Submitted with Payment	yes
Payment Type	Deposit Account
Payment was successfully received in RAM	$1200
RAM confirmation Number	11403
Deposit Account	501059
Authorized User	

The Director of the USPTO is hereby authorized to charge indicated fees and credit any overpayment as follows:

Charge any Additional Fees required under 37 C.F.R. Section 1.16 (National application filing, search, and examination fees)

Charge any Additional Fees required under 37 C.F.R. Section 1.17 (Patent application and reexamination processing fees)

Charge any Additional Fees required under 37 C.F.R. Section 1.19 (Document supply fees)

Charge any Additional Fees required under 37 C.F.R. Section 1.20 (Post Issuance fees)

Charge any Additional Fees required under 37 C.F.R. Section 1.21 (Miscellaneous fees and charges)

File Listing:

Document Number	Document Description	File Name	File Size(Bytes)/ Message Digest	Multi Part /.zip	Pages (if appl.)
1		A4432052.PDF	142407 65be68d4dc87dc50bee3e622aa8375081f8fcfb8	yes	9
	Multipart Description/PDF files in .zip description				
	Document Description		**Start**	**End**	
	Response After Final Action		1	1	
	Claims		2	3	
	Applicant Arguments/Remarks Made in an Amendment		4	9	
Warnings:					
Information:					
2	Request for Continued Examination (RCE)	A4431803.PDF	697818 32f7db13d386cf3f61458e58b4349b5d2c08cab3	no	3
Warnings:					
Information:					
3	Fee Worksheet (SB06)	fee-info.pdf	30634 86e16bb32f0025e459a89fdb1fbdac333087b67a	no	2
Warnings:					
Information:					
		Total Files Size (in bytes):	870859		

This Acknowledgement Receipt evidences receipt on the noted date by the USPTO of the indicated documents, characterized by the applicant, and including page counts, where applicable. It serves as evidence of receipt similar to a Post Card, as described in MPEP 503.

New Applications Under 35 U.S.C. 111
If a new application is being filed and the application includes the necessary components for a filing date (see 37 CFR 1.53(b)-(d) and MPEP 506), a Filing Receipt (37 CFR 1.54) will be issued in due course and the date shown on this Acknowledgement Receipt will establish the filing date of the application.

National Stage of an International Application under 35 U.S.C. 371
If a timely submission to enter the national stage of an international application is compliant with the conditions of 35 U.S.C. 371 and other applicable requirements a Form PCT/DO/EO/903 indicating acceptance of the application as a national stage submission under 35 U.S.C. 371 will be issued in addition to the Filing Receipt, in due course.

New International Application Filed with the USPTO as a Receiving Office
If a new international application is being filed and the international application includes the necessary components for an international filing date (see PCT Article 11 and MPEP 1810), a Notification of the International Application Number and of the International Filing Date (Form PCT/RO/105) will be issued in due course, subject to prescriptions concerning national security, and the date shown on this Acknowledgement Receipt will establish the international filing date of the application.

IN THE UNITED STATES PATENT AND TRADEMARK OFFICE

In re Application of:	Marc KRÜGER	Confirmation No.:	8894
Application No.:	13/744,623	Group Art Unit:	1792
Filed:	January 18, 2013	Examiner:	Drew E. BECKER

For: PORTION CAPSULE HAVING AN IDENTIFIER

RESPONSE UNDER 37 C.F.R. 1.114

Mail Stop RCE
Commissioner for Patents
P.O. Box 1450
Alexandria, VA 22313-1450

Sir:

Please consider the following Response for the above-referenced Application.

INTRODUCTORY COMMENTS

This Response is being submitted in reply to the Final Office Action dated January 9, 2015.

There are no **Amendments to the Specification** in this Response.

The **Amendments to the Claims** section begins on page 2 of this Response and any amendments to the claims are reflected in the listing of the claims included therein.

There are no **Amendments to the Drawings** in this Response.

The **Remarks** section begins on page 4 of this Response.

AMENDMENTS TO THE CLAIMS

This listing of the claims will replace all prior versions, and listings of claims in the Application.

1. (Currently amended) Portion capsule for producing a beverage comprising:

a base element having a cavity in which a beverage raw material is provided and which is closed by a membrane fastened to the base element; and

an identifier to individualize the respective portion capsule;

wherein the identifier is provided inside the membrane;

wherein the identifier is a machine-readable imprint<u>; and</u>

<u>wherein the base element has a sidewall having bulges</u>.

2. (Cancelled)

3. (Cancelled)

4. (Cancelled)

5. (Cancelled)

6. (Previously presented) Portion capsule according to claim 1, wherein a filter element, which divides the cavity into a first region for accommodating the beverage raw material and a second region for accommodating a beverage extract, is arranged within the cavity.

7. (Previously presented) Portion capsule according to claim 6, wherein the filter element is made of a non-woven material.

8. (Cancelled)

9. (Cancelled)

10. (Previously presented) Portion capsule according to claim 1, wherein the portion capsule comprises an edge area attached to the base element.

11. (Previously presented) Portion capsule according to claim 10, wherein a sealing surface is provided at the edge area.

12. (Previously presented) Portion capsule according to claim 1, wherein the portion capsule comprises a flange attached to the base element.

13. (Previously presented) Portion capsule according to claim 12, wherein a sealing surface is provided at the flange.

14. (Previously presented) Portion capsule according to claim 1, wherein the portion capsule comprises an edge area and a flange attached to the base element.

15. (Previously presented) Portion capsule according to claim 14, wherein a sealing surface is provided at a location selected from the group consisting of at the edge area, at the flange, and a combination thereof.

16. (Previously presented) Portion capsule according to claim 1, wherein the identifier is an optically detectable layer in the membrane.

17. (Previously presented) Portion capsule according to claim 1, wherein the identifier is a bar-code.

18. (Previously presented) Use of a portion capsule according to claim 1 for preparing a hot beverage.

REMARKS

This Response, along with the concurrently filed Request for Continued Examination, is being submitted in reply to the Final Office Action dated January 9, 2015.

Upon entry of this Response, claims 1, 6-7, and 10-18 will be pending in the Application. Claims 2-5 and 8-9 have been cancelled. Claim 1 has been amended. Support for the amendments can be found, *inter alia*, at paragraph [0061] of the published application, as well as Figures 1 and 3-5 of the application as filed.

In the outstanding Office Action, the Examiner required restriction of claim 18; rejected claims 1, 10, 14, and 16-17 under pre-AIA 35 U.S.C. 103(a) as being unpatentable over U.S. Patent Application Publication No. 2010/0078480 ("Aker") in view of U.S. Patent Application Publication No. 2001/0038204 ("Nojima"); and rejected claims 6-7, 11-13, and 15 under pre-AIA 35 U.S.C. 103(a) as being unpatentable over Aker, in view of Nojima, and further in view of U.S. Patent Application Publication No. 2001/0047724 ("Lazaris").

Reconsideration and allowance of all pending claims is respectfully requested.

RESTRICTION

The Examiner has required a restriction of claim 18, indicating that the claim is withdrawn from consideration as being directed to a non-elected invention. Specifically, the Examiner stated:

> Newly submitted claim 18 is directed to an invention that is independent or distinct from the invention originally claimed for the following reasons: the product of claim 1 can be used to practice another and materially different process, such as producing a non-hot beverage.
>
> Since applicant has received an action on the merits for the originally presented invention, this invention has been constructively elected by original presentation for prosecution on the merits. Accordingly, claim 18 is withdrawn from consideration as being directed to a non-elected invention. See 37 CFR 1.142(b) and MPEP § 821.03.

(Office Action, page 2).

Applicant respectfully traverses the restriction requirement as well as the constructive election of claim 18.

In requiring the restriction, the Examiner referenced 37 C.F.R. 1.142(b). However, Applicant submits that the Examiner has failed to consider 37 C.F.R. 1.142(a), which states, in relevant part, "[s]uch requirement will normally be made before any action on the merits; however, it may be made at any time ***before final action***" (emphasis added). As the restriction requirement is

being made for the first time in the instant Office Action, which is a Final Office Action, Applicant submits that the Examiner has failed to make the restriction requirement ***before final action*** as required by 37 C.F.R. 1.142(a). Therefore, Applicant submits that the restriction is improper, and respectfully requests that the Examiner withdraw the restriction and allow the claim.

Additionally, in requiring the restriction, the Examiner referenced MPEP 821.03, which states "[c]laims added by amendment following action by the examiner, … to an invention other than previously claimed, should be treated as indicated by 37 CFR 1.145." 37 C.F.R. 1.145 states, in relevant part:

> If, after an office action on an application, the applicant presents claims directed to an invention distinct from and independent of the invention previously claimed, the applicant will be required to restrict the claims to the invention previously claimed if the amendment is entered, subject to reconsideration and review as provided in §§ 1.143 and 1.144.

That is, according to MPEP 821.03 and 37 C.F.R. 1.145, restriction is required when added claims are "to an invention other than previously claimed" and "distinct from and independent of the invention previously claimed". The Examiner has provided a discussion comparing claim 18 to claim 1, however, the Examiner has not shown that claim 18 is distinct and independent of the invention previously claimed. Specifically, the Examiner has failed to show that claim 18 is distinct from and independent of originally filed claim 8, which stated "[p]ortion capsule according to claim 1 for use in preparing a hot beverage." As current claim 18 recites "[u]se of a portion capsule according to claim 1 for preparing a hot beverage," Applicant submits that originally filed claim 8 and current claim 18 are not distinct and independent, and thus, restriction of claim 18 is improper. Accordingly, Applicant respectfully requests that the Examiner withdraw the restriction and allow the claim.

Furthermore, the Examiner is reminded that:

> There are two criteria for a proper requirement for restriction between patentably distinct inventions:
>
> (A) The inventions must be independent (see MPEP § 802.01, § 806.06, § 808.01) or distinct as claimed (see MPEP § 806.05 - § 806.05(j)); and
>
> (B) There would be a serious burden on the examiner if restriction is not required (see MPEP § 803.02, § 808, and § 808.02).

"If the search and examination of all the claims in an application can be made without serious burden, the examiner must examine them on the merits, even though they include claims to independent or distinct inventions." *See* MPEP 803.

As original claim 8 was previously searched in the Office Action issued on May 22, 2013, Applicant submits that there would clearly be no serious burden on the Examiner if restriction were not required. That is, since originally filed claim 8 was previously searched, and current claim 18 is not distinct from and independent of previously filed claim 8, searching claim 18 would not impose a serious burden upon the Examiner. Therefore, Applicant submits that the Examiner has failed to show both criteria required for restriction have been met, and thus, the restriction requirement is improper. Accordingly, Applicant respectfully requests that the Examiner withdraw the restriction and allow the claim.

REJECTION UNDER 35 U.S.C. 103

Claims 1, 10, 14, and 16-17

The Examiner rejected claims 1, 10, 14, and 16-17 under pre-AIA 35 U.S.C. 103(a) as being unpatentable over Aker in view of Nojima. Specifically, the Examiner stated:

> Aker teaches a beverage capsule comprising a base element with a cavity (Figure 2A, #40), a membrane fastened to the edge area of the base element (Figure 2A, #45), and a machine-readable barcode identifier printed on the membrane (Figure 2A, #46).
>
> Aker does not specifically recite the barcode being within the membrane (claim 1), and the barcode being in the membrane (claim 16).
>
> Nojima et al teach a beverage container comprising a membrane label having a clear outer layer (Figure 2, #3) covering a printed layer (Figure 2, #6) which included a barcode (paragraph 0028; Figure 1).
>
> It would have been obvious to one of ordinary skill in the art to incorporate the clear cover of Nojima et al into the invention of Aker since both are directed to beverage containers, since Aker already included a barcode printed on its membrane (Figure 2A, #46), since barcodes were commonly covered by clear films as taught by Nojima et al (Figure 2, #3, 6), and since this clear film would have prevented damage to the barcode of Aker which could leave it smudged or unreadable.

(Office Action, page 3).

The Examiner is reminded that "[t]o establish *prima facie* obviousness of a claimed invention, all claim limitations must be taught or suggested by the prior art. *In re Royka*, 490 F.2d 981, 180 USPQ 580 (CCPA 1974). All words in a claim must be considered in judging the patentability of that claim against the prior art. *In re Wilson*, 424 F.2d 1382, 1385, 165 USPQ 494, 496 (CCPA 1970)." That is, to have any expectation of rejecting the claims over a single reference or a combination of references, each limitation must be taught somewhere in the applied prior art. If limitations are not found in any of the applied prior art, the rejection cannot stand. Additionally, if an independent claim is nonobvious under 35 U.S.C. 103, then any claim depending therefrom is nonobvious. *In re Fine*, 837 F.2d 1071, 5 USPQ2d 1596 (Fed. Cir. 1988).

See Manual of Patent Examining Procedure, 8th Edition (MPEP), Section 2143.03. In this case, the applied prior art references do not teach some limitations of the claims.

Applicant submits that Aker and Nojima, alone or in combination, fail to disclose or suggest "wherein the base element has a sidewall having bulges," as recited in independent claim 1, as currently amended. As understood by Applicant, both Aker and Nojima are absent any teaching of bulges in a sidewall of a base element. Instead, Aker is directed to "[m]ultiple instances of the same barcode … [being] printed on the surface of the round ending section" (Aker: paragraph [0017]), while Nojima is directed to "a tubular label having an inwardly facing surface provided thereon with lottery indicia or any other arbitrary information and adapted to be wrapped around a container body, and an elongated tubular member, as well as a labeled container" (Nojima: paragraph [0002]). Specifically, Aker discloses a barcode printed on the end of a "somewhat cylindrically symmetric" product body, on which there is no disclosure or suggestion of bulges (Aker: paragraph [0017]). As the tubular label of Nojima is adapted to be wrapped around a container body, and Nojima fails to teach any specific features of the container body itself, Nojima also fails to disclose or suggest bulges in a container body. Therefore, Nojima fails to cure the deficiencies of Aker, and thus, the proposed combination of Aker and Nojima fails to render the claims unpatentable. Accordingly, Applicant respectfully requests that the Examiner withdraw the rejection and allow the claim.

Dependent claims 10, 14, and 16-17 are believed to be distinguishable from the proposed combination of Aker and Nojima as depending from what is believed to be allowable independent claim 1, as discussed above. In addition, claims 10, 14, and 16-17 recite further limitations that distinguish over the applied art. Accordingly, Applicant respectfully requests that the Examiner withdraw the rejection and allow the claims.

Claims 6-7, 11-13, and 15

The Examiner rejected claims 6-7, 11-13, and 15 under pre-AIA 35 U.S.C. 103(a) as being unpatentable over Aker, in view of Nojima, and further in view of Lazaris. Specifically, the Examiner stated:

> Aker and Nojima et al teach the above mentioned components. Aker and Nojima et al do not recite a filter element (claim 6), the filter being a non-woven material (claim 7), a sealing surface at the edge area (claim 11, 15), a flange (claim 12), and a sealing surface on the flange (claim 13, 15).
>
> Lazaris et al teach a beverage capsule with a base element (Figure 2, #12), the base element having a flange and edge area with a heat seal (Figure 2, #28; paragraph 0032), a

> membrane (Figure 2, #16), and a non-woven filter element (Figure 2, #14; paragraph 0030).
>
> It would have been obvious to one of ordinary skill in the art to incorporate the claimed flange, seal, and filter elements into the invention of Aker, in view of Nojima et al and Lazaris et al, since all are directed to beverage capsules and/or containers, since Aker et al already included a base element and membrane but simply did not describe how they were joined or what the internal components were, since beverage capsules commonly included a flange and edge area with a heat seal, a membrane, and a nonwoven filter element as shown by Lazaris et al, and since the substitution of one known element for another would have yielded predictable results to one of ordinary skill in the art.

(Office Action, page 4).

Dependent claims 6-7, 11-13, and 15 are believed to be distinguishable from Aker and Nojima as depending from what is believed to be allowable independent claim 1, as discussed above. Additionally, Applicant submits that the beverage filter cartridge of Lazaris fails to disclose or suggest "a sidewall having bulges," and thus, fails to cure the deficiencies of Aker and Nojima. Therefore, Applicant submits that the proposed combination of Aker, Nojima, and Lazaris fails to render claims 6-7, 11-13, and 15 unpatentable. Furthermore, claims 6-7, 11-13, and 15 recite limitations that further distinguish over the applied references. Accordingly, Applicant respectfully requests that the Examiner withdraw the rejection and allow the claims.

CONCLUSION

For at least the reasons set forth above, Applicant respectfully requests reconsideration of the Application and withdrawal of any outstanding objections and rejections. As a result of the amendments and remarks presented herein, Applicant respectfully submits that the claims are not anticipated by nor rendered obvious by the applied references or their combination and thus, are in condition for allowance. As the claims are not anticipated by nor rendered obvious in view of the applied art, Applicant requests allowance of all pending claims in a timely manner. If the Examiner believes that prosecution of this Application could be expedited by a telephone conference, the Examiner is encouraged to contact the undersigned.

The Commissioner is hereby authorized to charge any additional fees and credit any overpayments to Deposit Account No. 50-1059.

Respectfully submitted,
McNEES, WALLACE & NURICK

By **/Sean P. Ritchie/**

Sean P. Ritchie
Reg. No. 70,148
100 Pine Street, P.O. Box 1166
Harrisburg, PA 17108-1166
Telephone: (717) 237-5369
Facsimile: (717) 260-1659

Dated: April 9, 2015

PTO/SB/06 (09-11)
Approved for use through 1/31/2014. OMB 0651-0032
U.S. Patent and Trademark Office; U.S. DEPARTMENT OF COMMERCE
Under the Paperwork Reduction Act of 1995, no persons are required to respond to a collection of information unless it displays a valid OMB control number.

PATENT APPLICATION FEE DETERMINATION RECORD

Substitute for Form PTO-875

Application or Docket Number	Filing Date	
13/744,623	01/18/2013	☐ To be Mailed

ENTITY: ☒ LARGE ☐ SMALL ☐ MICRO

APPLICATION AS FILED – PART I

FOR	(Column 1) NUMBER FILED	(Column 2) NUMBER EXTRA	RATE ($)	FEE ($)
☐ BASIC FEE (37 CFR 1.16(a), (b), or (c))	N/A	N/A	N/A	
☐ SEARCH FEE (37 CFR 1.16(k), (i), or (m))	N/A	N/A	N/A	
☐ EXAMINATION FEE (37 CFR 1.16(o), (p), or (q))	N/A	N/A	N/A	
TOTAL CLAIMS (37 CFR 1.16(i))	minus 20 =	*	x $ =	
INDEPENDENT CLAIMS (37 CFR 1.16(h))	minus 3 =	*	x $ =	
☐ APPLICATION SIZE FEE (37 CFR 1.16(s))	If the specification and drawings exceed 100 sheets of paper, the application size fee due is $310 ($155 for small entity) for each additional 50 sheets or fraction thereof. See 35 U.S.C. 41(a)(1)(G) and 37 CFR 1.16(s).			
☐ MULTIPLE DEPENDENT CLAIM PRESENT (37 CFR 1.16(j))				
* If the difference in column 1 is less than zero, enter "0" in column 2.			TOTAL	

APPLICATION AS AMENDED – PART II

AMENDMENT

04/09/2015	(Column 1) CLAIMS REMAINING AFTER AMENDMENT		(Column 2) HIGHEST NUMBER PREVIOUSLY PAID FOR	(Column 3) PRESENT EXTRA	RATE ($)	ADDITIONAL FEE ($)
Total (37 CFR 1.16(i))	* 11	Minus	** 20	= 0	x $80 =	0
Independent (37 CFR 1.16(h))	* 1	Minus	***3	= 0	x $420 =	0
☐ Application Size Fee (37 CFR 1.16(s))						
☐ FIRST PRESENTATION OF MULTIPLE DEPENDENT CLAIM (37 CFR 1.16(j))						
					TOTAL ADD'L FEE	0

AMENDMENT

	(Column 1) CLAIMS REMAINING AFTER AMENDMENT		(Column 2) HIGHEST NUMBER PREVIOUSLY PAID FOR	(Column 3) PRESENT EXTRA	RATE ($)	ADDITIONAL FEE ($)
Total (37 CFR 1.16(i))	*	Minus	**	=	x $ =	
Independent (37 CFR 1.16(h))	*	Minus	***	=	x $ =	
☐ Application Size Fee (37 CFR 1.16(s))						
☐ FIRST PRESENTATION OF MULTIPLE DEPENDENT CLAIM (37 CFR 1.16(j))						
					TOTAL ADD'L FEE	

* If the entry in column 1 is less than the entry in column 2, write "0" in column 3.
** If the "Highest Number Previously Paid For" IN THIS SPACE is less than 20, enter "20".
*** If the "Highest Number Previously Paid For" IN THIS SPACE is less than 3, enter "3".
The "Highest Number Previously Paid For" (Total or Independent) is the highest number found in the appropriate box in column 1.

LIE
/WANDA MITCHELL/

This collection of information is required by 37 CFR 1.16. The information is required to obtain or retain a benefit by the public which is to file (and by the USPTO to process) an application. Confidentiality is governed by 35 U.S.C. 122 and 37 CFR 1.14. This collection is estimated to take 12 minutes to complete, including gathering, preparing, and submitting the completed application form to the USPTO. Time will vary depending upon the individual case. Any comments on the amount of time you require to complete this form and/or suggestions for reducing this burden, should be sent to the Chief Information Officer, U.S. Patent and Trademark Office, U.S. Department of Commerce, P.O. Box 1450, Alexandria, VA 22313-1450. DO NOT SEND FEES OR COMPLETED FORMS TO THIS ADDRESS. **SEND TO: Commissioner for Patents, P.O. Box 1450, Alexandria, VA 22313-1450.**
If you need assistance in completing the form, call 1-800-PTO-9199 and select option 2.

UNITED STATES PATENT AND TRADEMARK OFFICE

UNITED STATES DEPARTMENT OF COMMERCE
United States Patent and Trademark Office
Address: COMMISSIONER FOR PATENTS
P.O. Box 1450
Alexandria, Virginia 22313-1450
www.uspto.gov

APPLICATION NO.	FILING DATE	FIRST NAMED INVENTOR	ATTORNEY DOCKET NO.	CONFIRMATION NO.
13/744,623	01/18/2013	Marc KRÜGER	26571-0030-C1	8894

26587 7590 05/12/2015
MCNEES WALLACE & NURICK LLC
100 PINE STREET
P.O. BOX 1166
HARRISBURG, PA 17108-1166

EXAMINER
BECKER, DREW E

ART UNIT	PAPER NUMBER
1792	

MAIL DATE	DELIVERY MODE
05/12/2015	PAPER

Please find below and/or attached an Office communication concerning this application or proceeding.

The time period for reply, if any, is set in the attached communication.

Office Action Summary	Application No. 13/744,623	Applicant(s) KRÜGER, MARC	
	Examiner DREW BECKER	Art Unit 1792	AIA (First Inventor to File) Status No

-- The MAILING DATE of this communication appears on the cover sheet with the correspondence address --

Period for Reply

A SHORTENED STATUTORY PERIOD FOR REPLY IS SET TO EXPIRE 3 MONTHS FROM THE MAILING DATE OF THIS COMMUNICATION.

- Extensions of time may be available under the provisions of 37 CFR 1.136(a). In no event, however, may a reply be timely filed after SIX (6) MONTHS from the mailing date of this communication.
- If NO period for reply is specified above, the maximum statutory period will apply and will expire SIX (6) MONTHS from the mailing date of this communication.
- Failure to reply within the set or extended period for reply will, by statute, cause the application to become ABANDONED (35 U.S.C. § 133). Any reply received by the Office later than three months after the mailing date of this communication, even if timely filed, may reduce any earned patent term adjustment. See 37 CFR 1.704(b).

Status

1)☒ Responsive to communication(s) filed on 4/9/15.

☐ A declaration(s)/affidavit(s) under **37 CFR 1.130(b)** was/were filed on _____.

2a)☐ This action is **FINAL**. 2b)☒ This action is non-final.

3)☐ An election was made by the applicant in response to a restriction requirement set forth during the interview on _____; the restriction requirement and election have been incorporated into this action.

4)☐ Since this application is in condition for allowance except for formal matters, prosecution as to the merits is closed in accordance with the practice under *Ex parte Quayle*, 1935 C.D. 11, 453 O.G. 213.

Disposition of Claims*

5)☒ Claim(s) 1,6,7 and 10-18 is/are pending in the application.

5a) Of the above claim(s) 18 is/are withdrawn from consideration.

6)☐ Claim(s) _____ is/are allowed.

7)☐ Claim(s) _____ is/are rejected.

8)☐ Claim(s) _____ is/are objected to.

9)☐ Claim(s) _____ are subject to restriction and/or election requirement.

* If any claims have been determined allowable, you may be eligible to benefit from the **Patent Prosecution Highway** program at a participating intellectual property office for the corresponding application. For more information, please see http://www.uspto.gov/patents/init_events/pph/index.jsp or send an inquiry to PPHfeedback@uspto.gov.

Application Papers

10)☐ The specification is objected to by the Examiner.

11)☐ The drawing(s) filed on _____ is/are: a)☐ accepted or b)☐ objected to by the Examiner.

Applicant may not request that any objection to the drawing(s) be held in abeyance. See 37 CFR 1.85(a).

Replacement drawing sheet(s) including the correction is required if the drawing(s) is objected to. See 37 CFR 1.121(d).

Priority under 35 U.S.C. § 119

12)☐ Acknowledgment is made of a claim for foreign priority under 35 U.S.C. § 119(a)-(d) or (f).

Certified copies:

a)☐ All b)☐ Some** c)☐ None of the:

1.☐ Certified copies of the priority documents have been received.

2.☐ Certified copies of the priority documents have been received in Application No. _____.

3.☐ Copies of the certified copies of the priority documents have been received in this National Stage application from the International Bureau (PCT Rule 17.2(a)).

** See the attached detailed Office action for a list of the certified copies not received.

Attachment(s)

1) ☐ Notice of References Cited (PTO-892)

2) ☒ Information Disclosure Statement(s) (PTO/SB/08a and/or PTO/SB/08b) Paper No(s)/Mail Date 3/2/15, 1/14/15.

3) ☐ Interview Summary (PTO-413) Paper No(s)/Mail Date. _____ .

4) ☐ Other: _____.

The present application is being examined under the pre-AIA first to invent provisions.

DETAILED ACTION

Continued Examination Under 37 CFR 1.114

1. A request for continued examination under 37 CFR 1.114, including the fee set forth in 37 CFR 1.17(e), was filed in this application after final rejection. Since this application is eligible for continued examination under 37 CFR 1.114, and the fee set forth in 37 CFR 1.17(e) has been timely paid, the finality of the previous Office action has been withdrawn pursuant to 37 CFR 1.114. Applicant's submission filed on 4/9/15 has been entered.

Election/Restrictions

2. Claim 18 is directed to an invention that is independent or distinct from the invention originally claimed for the following reasons:

3. Restriction to one of the following inventions is required under 35 U.S.C. 121:

I. Claims 1, 6-7, 10-17, drawn to a product, classified in B65D 85/804.

II. Claim 18, drawn to a method, classified in A23L 2/00.

4. Inventions I (the product of claims 1, 6-7, 10-17) and II (the method of claim 18) are related as product and process of use. The inventions can be shown to be distinct if either or both of the following can be shown: (1) the process for using the product as claimed can be practiced with another materially different product or (2) the product as

claimed can be used in a materially different process of using that product. See MPEP § 806.05(h). In the instant case the product of claim 1 can be used in a materially different process, such as producing a non-hot beverage.

5. Restriction for examination purposes as indicated is proper because all these inventions listed in this action are independent or distinct for the reasons given above and there would be a serious search and/or examination burden if restriction were not required because one or more of the following reasons apply:

The groups possess different classification and would require separate searches.

Applicant is advised that the reply to this requirement to be complete must include (i) an election of an invention to be examined even though the requirement may be traversed (37 CFR 1.143) **and (ii) identification of the claims encompassing the elected invention**.

The election of an invention may be made with or without traverse. To reserve a right to petition, the election must be made with traverse. If the reply does not distinctly and specifically point out supposed errors in the restriction requirement, the election shall be treated as an election without traverse. Traversal must be presented at the time of election in order to be considered timely. Failure to timely traverse the requirement will result in the loss of right to petition under 37 CFR 1.144. If claims are added after the election, applicant must indicate which of these claims are readable upon the elected invention.

Should applicant traverse on the ground that the inventions are not patentably distinct, applicant should submit evidence or identify such evidence now of record

showing the inventions to be obvious variants or clearly admit on the record that this is the case. In either instance, if the examiner finds one of the inventions unpatentable over the prior art, the evidence or admission may be used in a rejection under 35 U.S.C. 103 or pre-AIA 35 U.S.C. 103(a) of the other invention.

6. Since applicant has received an action on the merits for the originally presented invention, this invention has been constructively elected by original presentation for prosecution on the merits. Accordingly, claim 18 is withdrawn from consideration as being directed to a non-elected invention. See 37 CFR 1.142(b) and MPEP § 821.03.

Claim Rejections - 35 USC § 103

7. The following is a quotation of pre-AIA 35 U.S.C. 103(a) which forms the basis for all obviousness rejections set forth in this Office action:

> (a) A patent may not be obtained though the invention is not identically disclosed or described as set forth in section 102 of this title, if the differences between the subject matter sought to be patented and the prior art are such that the subject matter as a whole would have been obvious at the time the invention was made to a person having ordinary skill in the art to which said subject matter pertains. Patentability shall not be negatived by the manner in which the invention was made.

8. Claims 1, 10, 14, 16-17 are rejected under pre-AIA 35 U.S.C. 103(a) as being unpatentable over Aker [US 2010/0078480A1] in view of Nojima et al [US 2001/0038204A1] and Lazaris et al [US 2001/0047724A1].

Aker teaches a beverage capsule comprising a base element with a cavity (Figure 2A, #40), a membrane fastened to the edge area of the base element (Figure

2A, #45), a machine-readable barcode identifier printed on the membrane (Figure 2A, #46), and top and bottom bulges (Figure 3C).

Aker does not specifically recite the barcode being inside the membrane (claim 1, 16).

Nojima et al teach a beverage container comprising a membrane label having a clear outer layer (Figure 2, #3) covering a printed layer (Figure 2, #6) which included a barcode (paragraph 0028; Figure 1).

It would have been obvious to one of ordinary skill in the art to incorporate the clear cover of Nojima et al into the invention of Aker since both are directed to beverage containers, since Aker already included a barcode printed on its membrane (Figure 2A, #46), since barcodes were commonly covered by clear films as taught by Nojima et al (Figure 2, #3, 6), and since this clear film would have prevented damage to the barcode of Aker which could leave it smudged or unreadable.

9. Claims 6-7, 11-13, and 15 are rejected under pre-AIA 35 U.S.C. 103(a) as being unpatentable over Aker, in view of Nojima et al, and further in view of Lazaris et al [US 2001/0047724A1].

Aker and Nojima et al teach the above mentioned components. Aker and Nojima et al do not recite a filter element (claim 6), the filter being a non-woven material (claim 7), a sealing surface at the edge area (claim 11, 15), a flange (claim 12), and a sealing surface on the flange (claim 13, 15).

Lazaris et al teach a beverage capsule with a base element (Figure 2, #12), the base element having a flange and edge area with a heat seal (Figure 2, #28; paragraph

0032), a membrane (Figure 2, #16), a non-woven filter element (Figure 2, #14; paragraph 0030), and sidewall bulges which support the filter (Figure 1-2, #24, 26).

It would have been obvious to one of ordinary skill in the art to incorporate the claimed flange, seal, and filter elements into the invention of Aker, in view of Nojima et al and Lazaris et al, since all are directed to beverage capsules and/or containers, since Aker et al already included a base element and membrane but simply did not describe how they were joined or what the internal components were, since beverage capsules commonly included a flange and edge area with a heat seal, a membrane, and a non-woven filter element as shown by Lazaris et al, and since the substitution of one known element for another would have yielded predictable results to one of ordinary skill in the art.

Response to Arguments

10. Applicant's arguments filed 4/9/15 have been fully considered but they are not persuasive.

Applicant argues that the references do not include sidewall bulges. However, Aker taught top and bottom bulges (Figure 3C). Nojima et al taught sidewall bulges (Figure 3) and Lazaris et al also clearly taught sidewall bulges (Figure 1-2, #24, 26). Clearly, sidewall bulges were commonly known and utilized in the art.

Any inquiry concerning this communication or earlier communications from the examiner should be directed to DREW BECKER whose telephone number is (571)272-1396. The examiner can normally be reached on Mon.-Fri. 9am to 5:30pm.

If attempts to reach the examiner by telephone are unsuccessful, the examiner's supervisor, Rena Dye can be reached on 571-272-3186. The fax phone number for the organization where this application or proceeding is assigned is 571-273-8300.

Information regarding the status of an application may be obtained from the Patent Application Information Retrieval (PAIR) system. Status information for published applications may be obtained from either Private PAIR or Public PAIR. Status information for unpublished applications is available through Private PAIR only. For more information about the PAIR system, see http://pair-direct.uspto.gov. Should you have questions on access to the Private PAIR system, contact the Electronic Business Center (EBC) at 866-217-9197 (toll-free). If you would like assistance from a USPTO Customer Service Representative or access to the automated information system, call 800-786-9199 (IN USA OR CANADA) or 571-272-1000.

/DREW BECKER/
Primary Examiner, Art Unit 1792

PTO/SB/08a (01-10)
Approved for use through 07/31/2012. OMB 0651-0031
U.S. Patent and Trademark Office; U.S. DEPARTMENT OF COMMERCE
Under the Paperwork Reduction Act of 1995, no persons are required to respond to a collection of information unless it contains a valid OMB control number.

INFORMATION DISCLOSURE STATEMENT BY APPLICANT

(Not for submission under 37 CFR 1.99)

Application Number	13744623
Filing Date	2013-01-18
First Named Inventor	Marc KRÜGER
Art Unit	1792
Examiner Name	BECKER, DREW E
Attorney Docket Number	26571-0030-C1

U.S.PATENTS Remove

Examiner Initial*	Cite No	Patent Number	Kind Code[1]	Issue Date	Name of Patentee or Applicant of cited Document	Pages,Columns,Lines where Relevant Passages or Relevant Figures Appear
	1					

If you wish to add additional U.S. Patent citation information please click the Add button. Add

U.S.PATENT APPLICATION PUBLICATIONS Remove

Examiner Initial*	Cite No	Publication Number	Kind Code[1]	Publication Date	Name of Patentee or Applicant of cited Document	Pages,Columns,Lines where Relevant Passages or Relevant Figures Appear
	1	20020048621	A1	2002-04-25	Boyd et al.	

If you wish to add additional U.S. Published Application citation information please click the Add button. Add

FOREIGN PATENT DOCUMENTS Remove

Examiner Initial*	Cite No	Foreign Document Number[3]	Country Code[2] ¡	Kind Code[4]	Publication Date	Name of Patentee or Applicant of cited Document	Pages,Columns,Lines where Relevant Passages or Relevant Figures Appear	T[5]
	1	101090657	CN	A	2007-12-19	Kraft Foods R&D Inc.		☐
	2	1849718	EP	A1	2007-10-31	Cafe de Brasil S.p.A.		☐
	3	2006/014936	WO	A2	2006-02-09	Kraft Foods R&D Inc.		☐

Receipt date: 01/14/2015	Application Number	13744623	13744623 - GAU: 1792
INFORMATION DISCLOSURE STATEMENT BY APPLICANT (**Not for submission under 37 CFR 1.99)**	Filing Date	2013-01-18	
	First Named Inventor	Marc KRÜGER	
	Art Unit	1792	
	Examiner Name	BECKER, DREW E	
	Attorney Docket Number	26571-0030-C1	

If you wish to add additional Foreign Patent Document citation information please click the Add button **Add**

NON-PATENT LITERATURE DOCUMENTS Remove

Examiner Initials*	Cite No	Include name of the author (in CAPITAL LETTERS), title of the article (when appropriate), title of the item (book, magazine, journal, serial, symposium, catalog, etc), date, pages(s), volume-issue number(s), publisher, city and/or country where published.	T[5]
	1		☐

If you wish to add additional non-patent literature document citation information please click the Add button **Add**

EXAMINER SIGNATURE

Examiner Signature	/Drew Becker/	Date Considered	05/12/2015

*EXAMINER: Initial if reference considered, whether or not citation is in conformance with MPEP 609. Draw line through a citation if not in conformance and not considered. Include copy of this form with next communication to applicant.

[1] See Kind Codes of USPTO Patent Documents at www.USPTO.GOV or MPEP 901.04. [2] Enter office that issued the document, by the two-letter code (WIPO Standard ST.3). [3] For Japanese patent documents, the indication of the year of the reign of the Emperor must precede the serial number of the patent document. [4] Kind of document by the appropriate symbols as indicated on the document under WIPO Standard ST.16 if possible. [5] Applicant is to place a check mark here if English language translation is attached.

Receipt date: 01/14/2015	Application Number	13744623	13744623 - GAU: 1792
INFORMATION DISCLOSURE STATEMENT BY APPLICANT (**Not for submission under 37 CFR 1.99)**	Filing Date	2013-01-18	
	First Named Inventor	Marc KRÜGER	
	Art Unit	1792	
	Examiner Name	BECKER, DREW E	
	Attorney Docket Number	26571-0030-C1	

CERTIFICATION STATEMENT

Please see 37 CFR 1.97 and 1.98 to make the appropriate selection(s):

☒ That each item of information contained in the information disclosure statement was first cited in any communication from a foreign patent office in a counterpart foreign application not more than three months prior to the filing of the information disclosure statement. See 37 CFR 1.97(e)(1).

OR

☐ That no item of information contained in the information disclosure statement was cited in a communication from a foreign patent office in a counterpart foreign application, and, to the knowledge of the person signing the certification after making reasonable inquiry, no item of information contained in the information disclosure statement was known to any individual designated in 37 CFR 1.56(c) more than three months prior to the filing of the information disclosure statement. See 37 CFR 1.97(e)(2).

☐ See attached certification statement.

☒ The fee set forth in 37 CFR 1.17 (p) has been submitted herewith.

☐ A certification statement is not submitted herewith.

SIGNATURE

A signature of the applicant or representative is required in accordance with CFR 1.33, 10.18. Please see CFR 1.4(d) for the form of the signature.

Signature	/Geoffrey K. White/	Date (YYYY-MM-DD)	2015-01-14
Name/Print	Geoffrey K. White	Registration Number	62,684

This collection of information is required by 37 CFR 1.97 and 1.98. The information is required to obtain or retain a benefit by the public which is to file (and by the USPTO to process) an application. Confidentiality is governed by 35 U.S.C. 122 and 37 CFR 1.14. This collection is estimated to take 1 hour to complete, including gathering, preparing and submitting the completed application form to the USPTO. Time will vary depending upon the individual case. Any comments on the amount of time you require to complete this form and/or suggestions for reducing this burden, should be sent to the Chief Information Officer, U.S. Patent and Trademark Office, U.S. Department of Commerce, P.O. Box 1450, Alexandria, VA 22313-1450. DO NOT SEND FEES OR COMPLETED FORMS TO THIS ADDRESS. **SEND TO: Commissioner for Patents, P.O. Box 1450, Alexandria, VA 22313-1450.**

Privacy Act Statement

The Privacy Act of 1974 (P.L. 93-579) requires that you be given certain information in connection with your submission of the attached form related to a patent application or patent. Accordingly, pursuant to the requirements of the Act, please be advised that: (1) the general authority for the collection of this information is 35 U.S.C. 2(b)(2); (2) furnishing of the information solicited is voluntary; and (3) the principal purpose for which the information is used by the U.S. Patent and Trademark Office is to process and/or examine your submission related to a patent application or patent. If you do not furnish the requested information, the U.S. Patent and Trademark Office may not be able to process and/or examine your submission, which may result in termination of proceedings or abandonment of the application or expiration of the patent.

The information provided by you in this form will be subject to the following routine uses:

1. The information on this form will be treated confidentially to the extent allowed under the Freedom of Information Act (5 U.S.C. 552) and the Privacy Act (5 U.S.C. 552a). Records from this system of records may be disclosed to the Department of Justice to determine whether the Freedom of Information Act requires disclosure of these record s.

2. A record from this system of records may be disclosed, as a routine use, in the course of presenting evidence to a court, magistrate, or administrative tribunal, including disclosures to opposing counsel in the course of settlement negotiations.

3. A record in this system of records may be disclosed, as a routine use, to a Member of Congress submitting a request involving an individual, to whom the record pertains, when the individual has requested assistance from the Member with respect to the subject matter of the record.

4. A record in this system of records may be disclosed, as a routine use, to a contractor of the Agency having need for the information in order to perform a contract. Recipients of information shall be required to comply with the requirements of the Privacy Act of 1974, as amended, pursuant to 5 U.S.C. 552a(m).

5. A record related to an International Application filed under the Patent Cooperation Treaty in this system of records may be disclosed, as a routine use, to the International Bureau of the World Intellectual Property Organization, pursuant to the Patent Cooperation Treaty.

6. A record in this system of records may be disclosed, as a routine use, to another federal agency for purposes of National Security review (35 U.S.C. 181) and for review pursuant to the Atomic Energy Act (42 U.S.C. 218(c)).

7. A record from this system of records may be disclosed, as a routine use, to the Administrator, General Services, or his/her designee, during an inspection of records conducted by GSA as part of that agency's responsibility to recommend improvements in records management practices and programs, under authority of 44 U.S.C. 2904 and 2906. Such disclosure shall be made in accordance with the GSA regulations governing inspection of records for this purpose, and any other relevant (i.e., GSA or Commerce) directive. Such disclosure shall not be used to make determinations about individuals.

8. A record from this system of records may be disclosed, as a routine use, to the public after either publication of the application pursuant to 35 U.S.C. 122(b) or issuance of a patent pursuant to 35 U.S.C. 151. Further, a record may be disclosed, subject to the limitations of 37 CFR 1.14, as a routine use, to the public if the record was filed in an application which became abandoned or in which the proceedings were terminated and which application is referenced by either a published application, an application open to public inspections or an issued patent.

9. A record from this system of records may be disclosed, as a routine use, to a Federal, State, or local law enforcement agency, if the USPTO becomes aware of a violation or potential violation of law or regulation.

Search Notes	Application/Control No.	Applicant(s)/Patent Under Reexamination
	13744623	KRÜGER ET AL.
	Examiner	**Art Unit**
	Drew Becker	1792

CPC- SEARCHED

Symbol	Date	Examiner
B65D 2081/007, 85/8046; A47J 31/3676-31/3695, 31/4492	9/12/14	deb
updated	5/12/15	deb

CPC COMBINATION SETS - SEARCHED

Symbol	Date	Examiner

US CLASSIFICATION SEARCHED

Class	Subclass	Date	Examiner
426	077	5/16/2013	DMP
426	87,77,79,115,594-597,433,383,394	9/12/14	deb
99	295	9/12/14	deb
search	updated	5/12/15	deb

SEARCH NOTES

Search Notes	Date	Examiner
Inventor search.	5/16/2013	DMP
EAST text search.	5/16/2013	DMP
EAST/WEST:coffee,tea,beverage,pod,capsule,cartridge,container,identif,control,monitor,adjust,	9/12/14	deb
updated	5/12/15	deb

INTERFERENCE SEARCH

US Class/ CPC Symbol	US Subclass / CPC Group	Date	Examiner

/D.M.P./ Examiner.Art Unit 1792	

IPR2024-00304
Nespresso USA, Inc. Ex. 1050
Page 167 of 250

PTO/SB/08a (01-10)
Approved for use through 07/31/2012. OMB 0651-0031
U.S. Patent and Trademark Office; U.S. DEPARTMENT OF COMMERCE
Under the Paperwork Reduction Act of 1995, no persons are required to respond to a collection of information unless it contains a valid OMB control number.

INFORMATION DISCLOSURE STATEMENT BY APPLICANT

(Not for submission under 37 CFR 1.99)

Application Number	13744623
Filing Date	2013-01-18
First Named Inventor	Marc KRÜGER
Art Unit	1792
Examiner Name	BECKER, DREW E.
Attorney Docket Number	26571-0030-C1

U.S.PATENTS Remove

Examiner Initial*	Cite No	Patent Number	Kind Code[1]	Issue Date	Name of Patentee or Applicant of cited Document	Pages,Columns,Lines where Relevant Passages or Relevant Figures Appear
	1					

If you wish to add additional U.S. Patent citation information please click the Add button. Add

U.S.PATENT APPLICATION PUBLICATIONS Remove

Examiner Initial*	Cite No	Publication Number	Kind Code[1]	Publication Date	Name of Patentee or Applicant of cited Document	Pages,Columns,Lines where Relevant Passages or Relevant Figures Appear
	1	20020048621	A1	2002-04-25	Boyd et al.	
	2	20030172813	A1	2003-09-18	Schifferle	
	3	20120060697	A1	2012-03-15	Ozanne	

If you wish to add additional U.S. Published Application citation information please click the Add button. Add

FOREIGN PATENT DOCUMENTS Remove

Examiner Initial*	Cite No	Foreign Document Number[3]	Country Code[2] ¡	Kind Code[4]	Publication Date	Name of Patentee or Applicant of cited Document	Pages,Columns,Lines where Relevant Passages or Relevant Figures Appear	T[5]
	1	2003265320	JP		2003-09-24	SCHIFFERLE, RENE		☐

ALL REFERENCES CONSIDERED EXCEPT WHERE LINED THROUGH. /D.B./

Receipt date: 03/02/2015	Application Number	13744623	13744623 - GAU: 1792
INFORMATION DISCLOSURE STATEMENT BY APPLICANT (**Not for submission under 37 CFR 1.99)**	Filing Date	2013-01-18	
	First Named Inventor	Marc KRÜGER	
	Art Unit	1792	
	Examiner Name	BECKER, DREW E.	
	Attorney Docket Number	26571-0030-C1	

	2	2009511143	JP		2009-03-19			☐

If you wish to add additional Foreign Patent Document citation information please click the Add button Add

NON-PATENT LITERATURE DOCUMENTS Remove

Examiner Initials*	Cite No	Include name of the author (in CAPITAL LETTERS), title of the article (when appropriate), title of the item (book, magazine, journal, serial, symposium, catalog, etc), date, pages(s), volume-issue number(s), publisher, city and/or country where published.	T[5]
	1	Translation of Japanese Office Action, Application No. 2013-520009, dated December 16, 2014	☐

If you wish to add additional non-patent literature document citation information please click the Add button Add

EXAMINER SIGNATURE

Examiner Signature	/Drew Becker/	Date Considered	05/12/2015

*EXAMINER: Initial if reference considered, whether or not citation is in conformance with MPEP 609. Draw line through a citation if not in conformance and not considered. Include copy of this form with next communication to applicant.

[1] See Kind Codes of USPTO Patent Documents at www.USPTO.GOV or MPEP 901.04. [2] Enter office that issued the document, by the two-letter code (WIPO Standard ST.3). [3] For Japanese patent documents, the indication of the year of the reign of the Emperor must precede the serial number of the patent document. [4] Kind of document by the appropriate symbols as indicated on the document under WIPO Standard ST.16 if possible. [5] Applicant is to place a check mark here if English language translation is attached.

Receipt date: 03/02/2015	Application Number	13744623	13744623 - GAU: 1792
INFORMATION DISCLOSURE STATEMENT BY APPLICANT (**Not for submission under 37 CFR 1.99)**	Filing Date	2013-01-18	
	First Named Inventor	Marc KRÜGER	
	Art Unit	1792	
	Examiner Name	BECKER, DREW E.	
	Attorney Docket Number	26571-0030-C1	

CERTIFICATION STATEMENT

Please see 37 CFR 1.97 and 1.98 to make the appropriate selection(s):

☒ That each item of information contained in the information disclosure statement was first cited in any communication from a foreign patent office in a counterpart foreign application not more than three months prior to the filing of the information disclosure statement. See 37 CFR 1.97(e)(1).

OR

☐ That no item of information contained in the information disclosure statement was cited in a communication from a foreign patent office in a counterpart foreign application, and, to the knowledge of the person signing the certification after making reasonable inquiry, no item of information contained in the information disclosure statement was known to any individual designated in 37 CFR 1.56(c) more than three months prior to the filing of the information disclosure statement. See 37 CFR 1.97(e)(2).

☐ See attached certification statement.

☒ The fee set forth in 37 CFR 1.17 (p) has been submitted herewith.

☐ A certification statement is not submitted herewith.

SIGNATURE

A signature of the applicant or representative is required in accordance with CFR 1.33, 10.18. Please see CFR 1.4(d) for the form of the signature.

Signature	/Geoffrey K. White/	Date (YYYY-MM-DD)	2015-02-27
Name/Print	Geoffrey K. White	Registration Number	62,684

This collection of information is required by 37 CFR 1.97 and 1.98. The information is required to obtain or retain a benefit by the public which is to file (and by the USPTO to process) an application. Confidentiality is governed by 35 U.S.C. 122 and 37 CFR 1.14. This collection is estimated to take 1 hour to complete, including gathering, preparing and submitting the completed application form to the USPTO. Time will vary depending upon the individual case. Any comments on the amount of time you require to complete this form and/or suggestions for reducing this burden, should be sent to the Chief Information Officer, U.S. Patent and Trademark Office, U.S. Department of Commerce, P.O. Box 1450, Alexandria, VA 22313-1450. DO NOT SEND FEES OR COMPLETED FORMS TO THIS ADDRESS. **SEND TO: Commissioner for Patents, P.O. Box 1450, Alexandria, VA 22313-1450.**

Privacy Act Statement

The Privacy Act of 1974 (P.L. 93-579) requires that you be given certain information in connection with your submission of the attached form related to a patent application or patent. Accordingly, pursuant to the requirements of the Act, please be advised that: (1) the general authority for the collection of this information is 35 U.S.C. 2(b)(2); (2) furnishing of the information solicited is voluntary; and (3) the principal purpose for which the information is used by the U.S. Patent and Trademark Office is to process and/or examine your submission related to a patent application or patent. If you do not furnish the requested information, the U.S. Patent and Trademark Office may not be able to process and/or examine your submission, which may result in termination of proceedings or abandonment of the application or expiration of the patent.

The information provided by you in this form will be subject to the following routine uses:

1. The information on this form will be treated confidentially to the extent allowed under the Freedom of Information Act (5 U.S.C. 552) and the Privacy Act (5 U.S.C. 552a). Records from this system of records may be disclosed to the Department of Justice to determine whether the Freedom of Information Act requires disclosure of these record s.

2. A record from this system of records may be disclosed, as a routine use, in the course of presenting evidence to a court, magistrate, or administrative tribunal, including disclosures to opposing counsel in the course of settlement negotiations.

3. A record in this system of records may be disclosed, as a routine use, to a Member of Congress submitting a request involving an individual, to whom the record pertains, when the individual has requested assistance from the Member with respect to the subject matter of the record.

4. A record in this system of records may be disclosed, as a routine use, to a contractor of the Agency having need for the information in order to perform a contract. Recipients of information shall be required to comply with the requirements of the Privacy Act of 1974, as amended, pursuant to 5 U.S.C. 552a(m).

5. A record related to an International Application filed under the Patent Cooperation Treaty in this system of records may be disclosed, as a routine use, to the International Bureau of the World Intellectual Property Organization, pursuant to the Patent Cooperation Treaty.

6. A record in this system of records may be disclosed, as a routine use, to another federal agency for purposes of National Security review (35 U.S.C. 181) and for review pursuant to the Atomic Energy Act (42 U.S.C. 218(c)).

7. A record from this system of records may be disclosed, as a routine use, to the Administrator, General Services, or his/her designee, during an inspection of records conducted by GSA as part of that agency's responsibility to recommend improvements in records management practices and programs, under authority of 44 U.S.C. 2904 and 2906. Such disclosure shall be made in accordance with the GSA regulations governing inspection of records for this purpose, and any other relevant (i.e., GSA or Commerce) directive. Such disclosure shall not be used to make determinations about individuals.

8. A record from this system of records may be disclosed, as a routine use, to the public after either publication of the application pursuant to 35 U.S.C. 122(b) or issuance of a patent pursuant to 35 U.S.C. 151. Further, a record may be disclosed, subject to the limitations of 37 CFR 1.14, as a routine use, to the public if the record was filed in an application which became abandoned or in which the proceedings were terminated and which application is referenced by either a published application, an application open to public inspections or an issued patent.

9. A record from this system of records may be disclosed, as a routine use, to a Federal, State, or local law enforcement agency, if the USPTO becomes aware of a violation or potential violation of law or regulation.

IN THE UNITED STATES PATENT AND TRADEMARK OFFICE

In re Application of:	Marc KRÜGER	:	Confirmation No.:	8894
Application No.:	13/744,623	:	Group Art Unit:	1792
Filed:	January 18, 2018	:	Examiner:	Drew E. BECKER

For: PORTION CAPSULE HAVING AN IDENTIFIER

RESPONSE UNDER 37 C.F.R. 1.111

MAIL STOP AMENDMENT
COMMISSIONER FOR PATENTS
P.O. BOX 1450
ALEXANDRIA, VA 22313-1450

Sir:

Please consider the following Response for the above-referenced Application.

INTRODUCTORY COMMENTS

This Response is filed in response to the Non-Final Office Action dated May 12, 2015.

There is no **Amendments to the Specification** section in this Response.

The **Amendments to the Claims** section begins on page 2 of this Response and any amendments to the claims are reflected in the listing of the claims included therein.

The **Remarks/Arguments** section begins on page 4 of this Response.

AMENDMENTS TO THE CLAIMS

This listing of the claims will replace all prior versions, and listings of claims in the Application.

1. (Currently amended) Portion capsule for producing a beverage comprising:

a frustoconically shaped base element having a cavity in which a beverage raw material is provided and which is closed by a membrane fastened to the base element;

the base having a bottom area and a sidewall and an edge region; and

an identifier to individualize the respective portion capsule;

wherein the identifier is provided inside the membrane;

wherein the identifier is a machine-readable imprint; and

wherein the base element ~~has a sidewall~~ having bulges in the sidewall located at a distance from the bottom area and the edge region.

2. (Cancelled)

3. (Cancelled)

4. (Cancelled)

5. (Cancelled)

6. (Previously presented) Portion capsule according to claim 1, wherein a filter element, which divides the cavity into a first region for accommodating the beverage raw material and a second region for accommodating a beverage extract, is arranged within the cavity.

7. (Previously presented) Portion capsule according to claim 6, wherein the filter element is made of a non-woven material.

8. (Cancelled)

9. (Cancelled)

10. (Previously presented) Portion capsule according to claim 1, wherein the portion capsule comprises an edge area attached to the base element.

11. (Previously presented) Portion capsule according to claim 10, wherein a sealing surface is provided at the edge area.

12. (Previously presented) Portion capsule according to claim 1, wherein the portion capsule comprises a flange attached to the base element.

13. (Previously presented) Portion capsule according to claim 12, wherein a sealing surface is provided at the flange.

14. (Previously presented) Portion capsule according to claim 1, wherein the portion capsule comprises an edge area and a flange attached to the base element.

15. (Previously presented) Portion capsule according to claim 14, wherein a sealing surface is provided at a location selected from the group consisting of at the edge area, at the flange, and a combination thereof.

16. (Previously presented) Portion capsule according to claim 1, wherein the identifier is an optically detectable layer in the membrane.

17. (Previously presented) Portion capsule according to claim 1, wherein the identifier is a bar-code.

18. (Cancelled)

REMARKS

This Response is filed in response to the Non-Final Office Action dated May 12, 2015.

Upon entry of this Response, claims 1, 6, 7 and 10-17 will be pending in the Application. Claim 18 has been cancelled.

In the outstanding Office Action, the Examiner indicted a restriction under 35 U.S.C. 121, rejected claims 1, 10, 14 and 16-17 under pre-AIA 35 U.S.C. 103(a) as being unpatentable over Aker (U.S. 2010/0078480) (hereinafter "Aker") in view of Nojima et al. (U.S. 2001/0038204) (hereinafter "Nojima") and Lazaris et al. (U.S. 2001/0047724) (hereinafter "Lazaris") and rejected claims 607, 11-13 and 15 under pre-AIA 35 U.S.C. 103(a) as being unpatentable over Aker in view of Nojima and further in view of Lazaris.

Reconsideration and allowance of all pending claims is respectfully requested.

ELECTION/RESTRICTION

In the Official Action, the Examiner states the application is directed to two distinct inventions and has required a restriction pursuant to 35 U.S.C. §121.

Specifically, the Examiner grouped the claims as follows:

I. Claims 1, 6-7, 10-17, drawn to a product, classified in B65D 85/804.

II. Claim 18, drawn to a method, classified in A23L 2/00.

In the Office Action, the Examiner states:

4. Inventions I (the product of claims 1, 6-7, 10-17) and II (the method of claim 18) are related as product and process of use. The inventions can be shown to be distinct if either or both of the following can be shown: (1) the process for using the product as claimed can be practiced with another materially different product or (2) the product as

claimed can be used in a materially different process of using that product. See MPEP § 806.05(h). In the instant case the product of claim 1 can be used in a materially different process, such as producing a non-hot beverage.

In response to the Restriction Requirement, the Applicant elects Invention I directed to claims 1, 6-7 and 10-17 without traverse. Accordingly, claim 18 has been canceled as directed to a non-elected invention.

FIRST REJECTION UNDER 35 U.S.C. 103

The Examiner rejected claims 1, 10, 14 and 16-17 under pre-AIA 35 U.S.C. 103(a) as being unpatentable over Aker in view of Nojima and Lazaris. The Examiner's reasoning begins on page 4 of the Office Action and will not be repeated herein. It is noted that although the rejection recites all three references, only Aker and Nojima were addressed by the Examiner in the description of the rejection. Lazaris was not discussed or mentioned.

The Examiner is reminded that "[t]o establish *prima facie* obviousness of a claimed invention, all claim limitations must be taught or suggested by the prior art. *In re Royka*, 490 F.2d 981, 180 USPQ 580 (CCPA 1974). All words in a claim must be considered in judging the patentability of that claim against the prior art. *In re Wilson*, 424 F.2d 1382, 1385, 165 USPQ 494, 496 (CCPA 1970)." That is, to have any expectation of rejecting the claims over a single reference or a combination of references, each limitation must be taught somewhere in the applied prior art. If limitations are not found in any of the applied prior art, the rejection cannot stand. Additionally, if an independent claim is nonobvious under 35 U.S.C. 103, then any claim depending therefrom is nonobvious. *In re Fine*, 837 F.2d 1071, 5 USPQ2d 1596 (Fed. Cir. 1988). *See* Manual of Patent Examining Procedure, 8th Edition (MPEP), Section 2143.03. In this case, the applied prior art references do not teach some limitations of the claims.

Applicant submits that Aker and Nojima, either alone or in combination, fail to disclose or suggest a frustoconically shaped base element which has a bottom area and a sidewall and an

edge region, wherein the base element has bulges in the sidewall located at a distance from the bottom area and the edge region.

Aker is directed to "[m]ultiple instances of the same barcode … [being] printed on the surface of the round ending section" (Aker: paragraph [0017]). Figure 3c is directed to a somewhat cylindrically symmetric embodiment of the product body. There is no teaching or suggestion of a frustoconically shaped base element which has a bottom area and a sidewall and an edge region, wherein the base element has bulges in the sidewall located at a distance from the bottom area and the edge region, as required in amended claim 1.

Nojima is directed to "a tubular label having an inwardly facing surface provided thereon with lottery indicia or any other arbitrary information and adapted to be wrapped around a container body, and an elongated tubular member, as well as a labeled container" (Nojima: paragraph [0002]). As the tubular label of Nojima is adapted to be wrapped around a container body, and Nojima fails to teach any specific features of the container body itself, Nojima also fails to disclose or suggest bulges in a container body.

While not addressed by the Examiner in his reasoning of this rejection, Lazaris is directed to a cartridge with side walls 24, 26 are appropriately contoured to define generally V-shaped first ledges 32 extending between the front and back walls 20, 22, with the lower portions of the ledges 32 being spaced above the container bottom 18, and the sides diverging upwardly at an angle with respect to the vertical, as shown in FIG. 8. The side edge regions 14c of the filter element are secured as by heat sealing to the first ledges 32 of the side walls 24, 26, and the front and back edge regions 14a, 14b are similarly secured to the second ledges 34 of the front and back walls 20, 22. Preferably, the bottom of the filter element is also secured as by heat sealing as at 37 to the upwardly protruding boss 36. There is no teaching or suggestion of a frustoconically shaped base element which has a bottom area and a sidewall and an edge region, wherein the base element has bulges in the sidewall located at a distance from the bottom area and the edge region, as required in amended claim 1. To the contrary, Lazaris discloses a square cartridge which has ledges onto which the filter element can be securely heat sealed.

Therefore, Nojima and/or Lazaris fails to cure the deficiencies of Aker, and thus, the proposed combination of Aker and Nojima or of Aker, Nojima and Lazaris fails to render the

amended claim 1 unpatentable. Accordingly, Applicant respectfully requests that the Examiner withdraw the rejection and allow claim 1.

Dependent claims 10, 14, and 16-17 are believed to be distinguishable from the proposed combination of Aker and Nojima as depending from what is believed to be allowable independent claim 1, as discussed above. In addition, claims 10, 14, and 16-17 recite further limitations that distinguish over the applied art. Accordingly, Applicant respectfully requests that the Examiner withdraw the rejection and allow the claims.

In conclusion, it is respectfully submitted that claims 1, 10, 14 and 16-17 are not rendered obvious by Aker, Nojima, Lazaris or their combination and are therefore allowable.

SECOND REJECTION UNDER 35 U.S.C. 103

The Examiner rejected claims 6-7, 11-13 and 15 under pre-AIA 35 U.S.C. 103(a) as being unpatentable over Aker in view of Nojima and further in view of Lazaris. The Examiner's reasoning begins on page 4 of the Office Action and will not be repeated herein.

Dependent claims 6-7, 11-13, and 15 are believed to be distinguishable from Aker and Nojima as depending from what is believed to be allowable independent claim 1, as discussed above. Additionally, Applicant submits that, as discussed above, the beverage filter cartridge of Lazaris fails to disclose or suggest a frustoconically shaped base element which has a bottom area and a sidewall and an edge region, wherein the base element has bulges in the sidewall located at a distance from the bottom area and the edge region. Lazaris, therefore, fails to cure the deficiencies of Aker and Nojima. Therefore, Applicant submits that the proposed combination of Aker, Nojima, and Lazaris fails to render claims 6-7, 11-13, and 15 unpatentable. Furthermore, claims 6-7, 11-13, and 15 recite limitations that further distinguish over the applied references. Accordingly, Applicant respectfully requests that the Examiner withdraw the rejection and allow the claims.

In conclusion, it is respectfully submitted that claims 6-7, 11-13 and 15 are not rendered obvious by Aker, Nojima, Lazaris or their combination and are therefore allowable.

CONCLUSION

In view of the above, Applicant respectfully requests reconsideration of the Application and withdrawal of the outstanding objections and rejections. As a result of the amendments and remarks presented herein, Applicant respectfully submits that the pending claims are not anticipated by nor rendered obvious by the applied references or their combination and thus, are in condition for allowance. As the claims are not anticipated by nor rendered obvious in view of the applied art, Applicant requests allowance of all pending claims in a timely manner. If the Examiner believes that prosecution of this Application could be expedited by a telephone conference, the Examiner is encouraged to contact the Applicant.

The Commissioner is hereby authorized to charge any additional fees and credit any overpayments to Deposit Account No. 50-1059.

Respectfully submitted,
McNEES WALLACE & NURICK LLC

/Bruce J. Wolstoncroft/

By _____

Bruce J. Wolstoncroft
Reg. No. 32,075
100 Pine Street
P.O. Box 1166
Harrisburg, PA 17108-1166
Tel: (717) 581-3714

Date: August 11, 2015

Electronic Acknowledgement Receipt

EFS ID:	23173836
Application Number:	13744623
International Application Number:	
Confirmation Number:	8894
Title of Invention:	PORTION CAPSULE HAVING AN IDENTIFIER
First Named Inventor/Applicant Name:	Marc KRÜGER
Customer Number:	26587
Filer:	Bruce James Wolstoncroft/Kerri Smith
Filer Authorized By:	Bruce James Wolstoncroft
Attorney Docket Number:	26571-0030-C1
Receipt Date:	11-AUG-2015
Filing Date:	18-JAN-2013
Time Stamp:	12:34:48
Application Type:	Utility under 35 USC 111(a)

Payment information:

Submitted with Payment	no

File Listing:

Document Number	Document Description	File Name	File Size(Bytes)/ Message Digest	Multi Part /.zip	Pages (if appl.)
1		A4625709.PDF	145753 709fa57aff68667893ea886b256c5fa4b1de9b22	yes	8

	Multipart Description/PDF files in .zip description		
	Document Description	**Start**	**End**
	Amendment/Req. Reconsideration-After Non-Final Reject	1	1
	Claims	2	3
	Applicant Arguments/Remarks Made in an Amendment	4	8

Warnings:	
Information:	
Total Files Size (in bytes):	145753

This Acknowledgement Receipt evidences receipt on the noted date by the USPTO of the indicated documents, characterized by the applicant, and including page counts, where applicable. It serves as evidence of receipt similar to a Post Card, as described in MPEP 503.

New Applications Under 35 U.S.C. 111
If a new application is being filed and the application includes the necessary components for a filing date (see 37 CFR 1.53(b)-(d) and MPEP 506), a Filing Receipt (37 CFR 1.54) will be issued in due course and the date shown on this Acknowledgement Receipt will establish the filing date of the application.

National Stage of an International Application under 35 U.S.C. 371
If a timely submission to enter the national stage of an international application is compliant with the conditions of 35 U.S.C. 371 and other applicable requirements a Form PCT/DO/EO/903 indicating acceptance of the application as a national stage submission under 35 U.S.C. 371 will be issued in addition to the Filing Receipt, in due course.

New International Application Filed with the USPTO as a Receiving Office
If a new international application is being filed and the international application includes the necessary components for an international filing date (see PCT Article 11 and MPEP 1810), a Notification of the International Application Number and of the International Filing Date (Form PCT/RO/105) will be issued in due course, subject to prescriptions concerning national security, and the date shown on this Acknowledgement Receipt will establish the international filing date of the application.

PTO/SB/06 (09-11)
Approved for use through 1/31/2014. OMB 0651-0032
U.S. Patent and Trademark Office; U.S. DEPARTMENT OF COMMERCE
Under the Paperwork Reduction Act of 1995, no persons are required to respond to a collection of information unless it displays a valid OMB control number.

PATENT APPLICATION FEE DETERMINATION RECORD

Substitute for Form PTO-875

Application or Docket Number	Filing Date	
13/744,623	01/18/2013	☐ To be Mailed

ENTITY: ☒ LARGE ☐ SMALL ☐ MICRO

APPLICATION AS FILED – PART I

FOR	(Column 1) NUMBER FILED	(Column 2) NUMBER EXTRA	RATE ($)	FEE ($)
☐ BASIC FEE (37 CFR 1.16(a), (b), or (c))	N/A	N/A	N/A	
☐ SEARCH FEE (37 CFR 1.16(k), (i), or (m))	N/A	N/A	N/A	
☐ EXAMINATION FEE (37 CFR 1.16(o), (p), or (q))	N/A	N/A	N/A	
TOTAL CLAIMS (37 CFR 1.16(i))	minus 20 =	*	x $ =	
INDEPENDENT CLAIMS (37 CFR 1.16(h))	minus 3 =	*	x $ =	
☐ APPLICATION SIZE FEE (37 CFR 1.16(s))	If the specification and drawings exceed 100 sheets of paper, the application size fee due is $310 ($155 for small entity) for each additional 50 sheets or fraction thereof. See 35 U.S.C. 41(a)(1)(G) and 37 CFR 1.16(s).			
☐ MULTIPLE DEPENDENT CLAIM PRESENT (37 CFR 1.16(j))				
* If the difference in column 1 is less than zero, enter "0" in column 2.			TOTAL	

APPLICATION AS AMENDED – PART II

AMENDMENT 08/11/2015

	(Column 1) CLAIMS REMAINING AFTER AMENDMENT		(Column 2) HIGHEST NUMBER PREVIOUSLY PAID FOR	(Column 3) PRESENT EXTRA	RATE ($)	ADDITIONAL FEE ($)
Total (37 CFR 1.16(i))	* 11	Minus	** 20	= 0	x $80 =	0
Independent (37 CFR 1.16(h))	* 1	Minus	***3	= 0	x $420 =	0
☐ Application Size Fee (37 CFR 1.16(s))						
☐ FIRST PRESENTATION OF MULTIPLE DEPENDENT CLAIM (37 CFR 1.16(j))						
					TOTAL ADD'L FEE	0

AMENDMENT

	(Column 1) CLAIMS REMAINING AFTER AMENDMENT		(Column 2) HIGHEST NUMBER PREVIOUSLY PAID FOR	(Column 3) PRESENT EXTRA	RATE ($)	ADDITIONAL FEE ($)
Total (37 CFR 1.16(i))	*	Minus	**	=	x $ =	
Independent (37 CFR 1.16(h))	*	Minus	***	=	x $ =	
☐ Application Size Fee (37 CFR 1.16(s))						
☐ FIRST PRESENTATION OF MULTIPLE DEPENDENT CLAIM (37 CFR 1.16(j))						
					TOTAL ADD'L FEE	

* If the entry in column 1 is less than the entry in column 2, write "0" in column 3.
** If the "Highest Number Previously Paid For" IN THIS SPACE is less than 20, enter "20".
*** If the "Highest Number Previously Paid For" IN THIS SPACE is less than 3, enter "3".
The "Highest Number Previously Paid For" (Total or Independent) is the highest number found in the appropriate box in column 1.

HSLIE
/LELAND WATKINS/

This collection of information is required by 37 CFR 1.16. The information is required to obtain or retain a benefit by the public which is to file (and by the USPTO to process) an application. Confidentiality is governed by 35 U.S.C. 122 and 37 CFR 1.14. This collection is estimated to take 12 minutes to complete, including gathering, preparing, and submitting the completed application form to the USPTO. Time will vary depending upon the individual case. Any comments on the amount of time you require to complete this form and/or suggestions for reducing this burden, should be sent to the Chief Information Officer, U.S. Patent and Trademark Office, U.S. Department of Commerce, P.O. Box 1450, Alexandria, VA 22313-1450. DO NOT SEND FEES OR COMPLETED FORMS TO THIS ADDRESS. **SEND TO: Commissioner for Patents, P.O. Box 1450, Alexandria, VA 22313-1450.**
If you need assistance in completing the form, call 1-800-PTO-9199 and select option 2.

UNITED STATES PATENT AND TRADEMARK OFFICE

UNITED STATES DEPARTMENT OF COMMERCE
United States Patent and Trademark Office
Address: COMMISSIONER FOR PATENTS
P.O. Box 1450
Alexandria, Virginia 22313-1450
www.uspto.gov

APPLICATION NO.	FILING DATE	FIRST NAMED INVENTOR	ATTORNEY DOCKET NO.	CONFIRMATION NO.
13/744,623	01/18/2013	Marc KRÜGER	26571-0030-C1	8894

26587 7590 09/18/2015
MCNEES WALLACE & NURICK LLC
100 PINE STREET
P.O. BOX 1166
HARRISBURG, PA 17108-1166

EXAMINER
BECKER, DREW E

ART UNIT	PAPER NUMBER
1792	

MAIL DATE	DELIVERY MODE
09/18/2015	PAPER

Please find below and/or attached an Office communication concerning this application or proceeding.

The time period for reply, if any, is set in the attached communication.

Office Action Summary	Application No. 13/744,623	Applicant(s) KRÜGER, MARC	
	Examiner DREW BECKER	Art Unit 1792	AIA (First Inventor to File) Status No

-- The MAILING DATE of this communication appears on the cover sheet with the correspondence address --

Period for Reply

A SHORTENED STATUTORY PERIOD FOR REPLY IS SET TO EXPIRE 3 MONTHS FROM THE MAILING DATE OF THIS COMMUNICATION.

- Extensions of time may be available under the provisions of 37 CFR 1.136(a). In no event, however, may a reply be timely filed after SIX (6) MONTHS from the mailing date of this communication.
- If NO period for reply is specified above, the maximum statutory period will apply and will expire SIX (6) MONTHS from the mailing date of this communication.
- Failure to reply within the set or extended period for reply will, by statute, cause the application to become ABANDONED (35 U.S.C. § 133). Any reply received by the Office later than three months after the mailing date of this communication, even if timely filed, may reduce any earned patent term adjustment. See 37 CFR 1.704(b).

Status

1)☒ Responsive to communication(s) filed on 8/11/15.

☐ A declaration(s)/affidavit(s) under **37 CFR 1.130(b)** was/were filed on _____.

2a)☒ This action is **FINAL**. 2b)☐ This action is non-final.

3)☐ An election was made by the applicant in response to a restriction requirement set forth during the interview on _____; the restriction requirement and election have been incorporated into this action.

4)☐ Since this application is in condition for allowance except for formal matters, prosecution as to the merits is closed in accordance with the practice under *Ex parte Quayle*, 1935 C.D. 11, 453 O.G. 213.

Disposition of Claims*

5)☒ Claim(s) 1,6,7 and 10-17 is/are pending in the application.

5a) Of the above claim(s) _____ is/are withdrawn from consideration.

6)☐ Claim(s) _____ is/are allowed.

7)☒ Claim(s) 1, 6-7, 10-17 is/are rejected.

8)☐ Claim(s) _____ is/are objected to.

9)☐ Claim(s) _____ are subject to restriction and/or election requirement.

* If any claims have been determined allowable, you may be eligible to benefit from the **Patent Prosecution Highway** program at a participating intellectual property office for the corresponding application. For more information, please see http://www.uspto.gov/patents/init_events/pph/index.jsp or send an inquiry to PPHfeedback@uspto.gov.

Application Papers

10)☐ The specification is objected to by the Examiner.

11)☐ The drawing(s) filed on _____ is/are: a)☐ accepted or b)☐ objected to by the Examiner.

Applicant may not request that any objection to the drawing(s) be held in abeyance. See 37 CFR 1.85(a).

Replacement drawing sheet(s) including the correction is required if the drawing(s) is objected to. See 37 CFR 1.121(d).

Priority under 35 U.S.C. § 119

12)☐ Acknowledgment is made of a claim for foreign priority under 35 U.S.C. § 119(a)-(d) or (f).

Certified copies:

a)☐ All b)☐ Some** c)☐ None of the:

1.☐ Certified copies of the priority documents have been received.

2.☐ Certified copies of the priority documents have been received in Application No. _____.

3.☐ Copies of the certified copies of the priority documents have been received in this National Stage application from the International Bureau (PCT Rule 17.2(a)).

** See the attached detailed Office action for a list of the certified copies not received.

Attachment(s)

1) ☒ Notice of References Cited (PTO-892)

2) ☐ Information Disclosure Statement(s) (PTO/SB/08a and/or PTO/SB/08b) Paper No(s)/Mail Date _____.

3) ☐ Interview Summary (PTO-413) Paper No(s)/Mail Date. _____ .

4) ☐ Other: _____.

IPR2024-00304
Nespresso USA, Inc. Ex. 1050
Page 184 of 250

The present application is being examined under the pre-AIA first to invent provisions.

DETAILED ACTION

Claim Rejections - 35 USC § 112

1. The following is a quotation of 35 U.S.C. 112(b):

> (b) CONCLUSION.—The specification shall conclude with one or more claims particularly pointing out and distinctly claiming the subject matter which the inventor or a joint inventor regards as the invention.

The following is a quotation of 35 U.S.C. 112 (pre-AIA), second paragraph:

> The specification shall conclude with one or more claims particularly pointing out and distinctly claiming the subject matter which the applicant regards as his invention.

2. Claims 10, 14 are rejected under 35 U.S.C. 112(b) or 35 U.S.C. 112 (pre-AIA), second paragraph, as being indefinite for failing to particularly point out and distinctly claim the subject matter which the inventor or a joint inventor, or for pre-AIA the applicant regards as the invention.

3. Claims 10 and 14 recite “an edge area”. It is not clear if this is the same element as the “edge region” in parent claim 1, or not.

Claim Rejections - 35 USC § 103

4. The following is a quotation of pre-AIA 35 U.S.C. 103(a) which forms the basis for all obviousness rejections set forth in this Office action:

> (a) A patent may not be obtained though the invention is not identically disclosed or described as set forth in section 102 of this title, if the differences between the subject matter sought to be patented and the prior art are such that the subject matter as a whole would have been obvious at the time the invention was made to a person having ordinary skill in the art to which said subject matter pertains. Patentability shall not be negatived by the manner in which the invention was made.

5. Claims 1 and 10-17 are rejected under pre-AIA 35 U.S.C. 103(a) as being unpatentable over Aker [US 2010/0078480A1] in view of Nojima et al [US 2001/0038204A1] and Nordskog [Pat. No. 4,867,993].

Aker teaches a beverage capsule comprising a frustoconical base element with a cavity (Figure 2A, #40), a membrane fastened to the edge area of the base element (Figure 2A, #45), a machine-readable barcode identifier printed on the membrane (Figure 2A, #46), and top and bottom bulges (Figure 3C).

Aker does not specifically recite the barcode being inside the membrane (claim 1, 16), bulges at a distance from the bottom and edge region (claim 1), a sealing surface at the edge area (claim 11, 15), a flange (claim 12), and a sealing surface on the flange or edge area (claim 13, 15).

Nojima et al teach a beverage container comprising a membrane label having a clear outer layer (Figure 2, #3) covering a printed layer (Figure 2, #6) which included a barcode (paragraph 0028; Figure 1).

It would have been obvious to one of ordinary skill in the art to incorporate the clear cover of Nojima et al into the invention of Aker since both are directed to beverage containers, since Aker already included a barcode printed on its membrane (Figure 2A, #46), since barcodes were commonly covered by clear films as taught by Nojima et al (Figure 2, #3, 6), and since this clear film would have prevented damage to the barcode of Aker which could leave it smudged or unreadable.

Nordskog teaches a beverage capsule with a frustoconical base element (Figure 4-6, #10a), a membrane closing the top (Figure 4-6, #44), the membrane sealed to a

flange and edge area (Figure 4-6, #38a), and a sidewall with accordion bulges at a distance from the bottom and edge region (Figure 4-6, #30a).

It would have been obvious to one of ordinary skill in the art to incorporate the claimed bulges and seal surface into the invention of Aker, in view of Nojima et al and Nordskog, since all are directed to beverage containers/capsules, since Aker already included top and bottom bulges (Figure 3C), since Aker et al already included a base element and membrane but simply did not describe how they were joined, since beverage capsules commonly included a flange and edge area with a seal for the membrane as shown by Nordskog above, since this would have provided a simple and effective means for attaching the membrane of Aker, since beverage capsules commonly included sidewall bulges as shown by Nordskog above, since the sidewall bulges permitted collapsing of the capsule to provide a smaller storage volume prior to use as taught by Nordskog (Figure 6), and since the substitution of one known element for another would have yielded predictable results to one of ordinary skill in the art.

In conclusion, all of the claimed elements were known in the prior art and ne skilled in the art could have combined the elements as claimed with no change in their respective functions, and the combination would have yielded predictable results to one of ordinary skill in the art at the time of the invention.

6. Claims 6-7 are rejected under pre-AIA 35 U.S.C. 103(a) as being unpatentable over Aker, in view of Nojima et al, and further in view of Lazaris et al [US 2001/0047724A1].

Aker, Nordskog, and Nojima et al teach the above mentioned components. Aker, Nordskog, and Nojima et al do not recite a filter element separating the cavity (claim 6), the filter being a non-woven material (claim 7),

Lazaris et al teach a beverage capsule with a base element (Figure 2, #12), the base element having a flange and edge area with a heat seal (Figure 2, #28; paragraph 0032), a membrane (Figure 2, #16), a non-woven filter element (Figure 2, #14; paragraph 0030), and sidewall bulges which support the filter (Figure 1-2, #24, 26).

It would have been obvious to one of ordinary skill in the art to incorporate the claimed filter element into the invention of Aker, in view of Nojima et al, Nordskog, and Lazaris et al, since all are directed to beverage capsules and/or containers, since Aker et al simply did not describe what the internal components were, since beverage capsules commonly included a non-woven filter element separating the cavity as shown by Lazaris et al above, and since the substitution of one known element for another would have yielded predictable results to one of ordinary skill in the art.

Response to Arguments

7. Applicant's arguments with respect to claims 1, 6-7, and 10-17 have been considered but are moot because the arguments do not apply to any of the references being used in the current rejection.

Conclusion

8. Applicant's amendment necessitated the new ground(s) of rejection presented in this Office action. Accordingly, **THIS ACTION IS MADE FINAL**. See MPEP § 706.07(a). Applicant is reminded of the extension of time policy as set forth in 37 CFR 1.136(a).

A shortened statutory period for reply to this final action is set to expire THREE MONTHS from the mailing date of this action. In the event a first reply is filed within TWO MONTHS of the mailing date of this final action and the advisory action is not mailed until after the end of the THREE-MONTH shortened statutory period, then the shortened statutory period will expire on the date the advisory action is mailed, and any extension fee pursuant to 37 CFR 1.136(a) will be calculated from the mailing date of the advisory action. In no event, however, will the statutory period for reply expire later than SIX MONTHS from the date of this final action.

Any inquiry concerning this communication or earlier communications from the examiner should be directed to DREW BECKER whose telephone number is (571)272-1396. The examiner can normally be reached on Mon.-Fri. 9am to 5:30pm.

If attempts to reach the examiner by telephone are unsuccessful, the examiner's supervisor, Rena Dye can be reached on 571-272-3186. The fax phone number for the organization where this application or proceeding is assigned is 571-273-8300.

Information regarding the status of an application may be obtained from the Patent Application Information Retrieval (PAIR) system. Status information for published applications may be obtained from either Private PAIR or Public PAIR. Status information for unpublished applications is available through Private PAIR only. For more information about the PAIR system, see http://pair-direct.uspto.gov. Should you have questions on access to the Private PAIR system, contact the Electronic Business Center (EBC) at 866-217-9197 (toll-free). If you would like assistance from a USPTO Customer Service Representative or access to the automated information system, call 800-786-9199 (IN USA OR CANADA) or 571-272-1000.

/DREW BECKER/
Primary Examiner, Art Unit 1792

Notice of References Cited	Application/Control No. 13/744,623	Applicant(s)/Patent Under Reexamination KRÜGER, MARC	
	Examiner DREW BECKER	Art Unit 1792	Page 1 of 1

U.S. PATENT DOCUMENTS

*		Document Number Country Code-Number-Kind Code	Date MM-YYYY	Name	CPC Classification	US Classification
*	A	US-4,867,993 A	09-1989	Nordskog; Robert A.	B65D85/8043	426/110
*	B	US-5,243,164 A	09-1993	Erickson; Laurence R.	A47J31/02	219/689
*	C	US-5,108,768 A	04-1992	So; Peter K. L.	B65D85/8043	206/519
	D	US-				
	E	US-				
	F	US-				
	G	US-				
	H	US-				
	I	US-				
	J	US-				
	K	US-				
	L	US-				
	M	US-				

FOREIGN PATENT DOCUMENTS

*		Document Number Country Code-Number-Kind Code	Date MM-YYYY	Country	Name	CPC Classification
	N					
	O					
	P					
	Q					
	R					
	S					
	T					

NON-PATENT DOCUMENTS

*		Include as applicable: Author, Title Date, Publisher, Edition or Volume, Pertinent Pages)
	U	
	V	
	W	
	X	

*A copy of this reference is not being furnished with this Office action. (See MPEP § 707.05(a).)
Dates in MM-YYYY format are publication dates. Classifications may be US or foreign.

Search Notes	Application/Control No.	Applicant(s)/Patent Under Reexamination
	13744623	KRÜGER ET AL.
	Examiner	**Art Unit**
	Drew Becker	1792

CPC- SEARCHED

Symbol	Date	Examiner
B65D 2081/007, 85/8046; A47J 31/3676-31/3695, 31/4492	9/12/14	deb
updated	9/15/15	deb

CPC COMBINATION SETS - SEARCHED

Symbol	Date	Examiner

US CLASSIFICATION SEARCHED

Class	Subclass	Date	Examiner
426	077	5/16/2013	DMP
426	87,77,79,115,594-597,433,383,394	9/12/14	deb
99	295	9/12/14	deb
search	updated	9/15/15	deb

SEARCH NOTES

Search Notes	Date	Examiner
Inventor search.	5/16/2013	DMP
EAST text search.	5/16/2013	DMP
EAST/WEST:coffee,tea,beverage,pod,capsule,cartridge,container,identif,control,monitor,adjust,	9/12/14	deb
updated	9/15/15	deb

INTERFERENCE SEARCH

US Class/ CPC Symbol	US Subclass / CPC Group	Date	Examiner

PTO/SB/08a (01-10)
Approved for use through 07/31/2012. OMB 0651-0031
U.S. Patent and Trademark Office; U.S. DEPARTMENT OF COMMERCE
Under the Paperwork Reduction Act of 1995, no persons are required to respond to a collection of information unless it contains a valid OMB control number.

INFORMATION DISCLOSURE STATEMENT BY APPLICANT

(Not for submission under 37 CFR 1.99)

Application Number	13744623
Filing Date	2013-01-18
First Named Inventor	Marc KRÜGER
Art Unit	1792
Examiner Name	BECKER, DREW E
Attorney Docket Number	26571-0030-C1

U.S.PATENTS Remove

Examiner Initial*	Cite No	Patent Number	Kind Code[1]	Issue Date	Name of Patentee or Applicant of cited Document	Pages,Columns,Lines where Relevant Passages or Relevant Figures Appear
	1					

If you wish to add additional U.S. Patent citation information please click the Add button. Add

U.S.PATENT APPLICATION PUBLICATIONS Remove

Examiner Initial*	Cite No	Publication Number	Kind Code[1]	Publication Date	Name of Patentee or Applicant of cited Document	Pages,Columns,Lines where Relevant Passages or Relevant Figures Appear
	1					

If you wish to add additional U.S. Published Application citation information please click the Add button. Add

FOREIGN PATENT DOCUMENTS Remove

Examiner Initial*	Cite No	Foreign Document Number[3]	Country Code[2] ¡	Kind Code[4]	Publication Date	Name of Patentee or Applicant of cited Document	Pages,Columns,Lines where Relevant Passages or Relevant Figures Appear	T[5]
	1	2010516364	JP	A	2010-05-20			☐
	2	2008/090122	WO	A2	2008-07-31	Nestec S.A.		☐
	3	2007522856	JP	A	2007-08-16			☐

INFORMATION DISCLOSURE STATEMENT BY APPLICANT (Not for submission under 37 CFR 1.99)	Application Number	13744623
	Filing Date	2013-01-18
	First Named Inventor	Marc KRÜGER
	Art Unit	1792
	Examiner Name	BECKER, DREW E
	Attorney Docket Number	26571-0030-C1

	4	2005079638	WO	A1	2005-09-01	Kraft Foods R & D Inc.		☐
	5	2001082699	JP	A	2001-03-30	Suzuki Akitomo, Suzuki Masayo		☐
	6	H0394377	JP	A	1991-04-19	Nec Corp		☐

If you wish to add additional Foreign Patent Document citation information please click the Add button Add

NON-PATENT LITERATURE DOCUMENTS Remove

Examiner Initials*	Cite No	Include name of the author (in CAPITAL LETTERS), title of the article (when appropriate), title of the item (book, magazine, journal, serial, symposium, catalog, etc), date, pages(s), volume-issue number(s), publisher, city and/or country where published.	T[5]
	1		☐

If you wish to add additional non-patent literature document citation information please click the Add button Add

EXAMINER SIGNATURE

Examiner Signature		Date Considered	

*EXAMINER: Initial if reference considered, whether or not citation is in conformance with MPEP 609. Draw line through a citation if not in conformance and not considered. Include copy of this form with next communication to applicant.

[1] See Kind Codes of USPTO Patent Documents at www.USPTO.GOV or MPEP 901.04. [2] Enter office that issued the document, by the two-letter code (WIPO Standard ST.3). [3] For Japanese patent documents, the indication of the year of the reign of the Emperor must precede the serial number of the patent document. [4] Kind of document by the appropriate symbols as indicated on the document under WIPO Standard ST.16 if possible. [5] Applicant is to place a check mark here if English language translation is attached.

INFORMATION DISCLOSURE STATEMENT BY APPLICANT (Not for submission under 37 CFR 1.99)		
	Application Number	13744623
	Filing Date	2013-01-18
	First Named Inventor	Marc KRÜGER
	Art Unit	1792
	Examiner Name	BECKER, DREW E
	Attorney Docket Number	26571-0030-C1

CERTIFICATION STATEMENT

Please see 37 CFR 1.97 and 1.98 to make the appropriate selection(s):

☒ That each item of information contained in the information disclosure statement was first cited in any communication from a foreign patent office in a counterpart foreign application not more than three months prior to the filing of the information disclosure statement. See 37 CFR 1.97(e)(1).

OR

☐ That no item of information contained in the information disclosure statement was cited in a communication from a foreign patent office in a counterpart foreign application, and, to the knowledge of the person signing the certification after making reasonable inquiry, no item of information contained in the information disclosure statement was known to any individual designated in 37 CFR 1.56(c) more than three months prior to the filing of the information disclosure statement. See 37 CFR 1.97(e)(2).

☐ See attached certification statement.

☒ The fee set forth in 37 CFR 1.17 (p) has been submitted herewith.

☐ A certification statement is not submitted herewith.

SIGNATURE

A signature of the applicant or representative is required in accordance with CFR 1.33, 10.18. Please see CFR 1.4(d) for the form of the signature.

Signature	/Bruce J. Wolstoncroft/	Date (YYYY-MM-DD)	2015-11-03
Name/Print	Bruce J. Wolstoncroft	Registration Number	32,075

This collection of information is required by 37 CFR 1.97 and 1.98. The information is required to obtain or retain a benefit by the public which is to file (and by the USPTO to process) an application. Confidentiality is governed by 35 U.S.C. 122 and 37 CFR 1.14. This collection is estimated to take 1 hour to complete, including gathering, preparing and submitting the completed application form to the USPTO. Time will vary depending upon the individual case. Any comments on the amount of time you require to complete this form and/or suggestions for reducing this burden, should be sent to the Chief Information Officer, U.S. Patent and Trademark Office, U.S. Department of Commerce, P.O. Box 1450, Alexandria, VA 22313-1450. DO NOT SEND FEES OR COMPLETED FORMS TO THIS ADDRESS. **SEND TO: Commissioner for Patents, P.O. Box 1450, Alexandria, VA 22313-1450.**

Privacy Act Statement

The Privacy Act of 1974 (P.L. 93-579) requires that you be given certain information in connection with your submission of the attached form related to a patent application or patent. Accordingly, pursuant to the requirements of the Act, please be advised that: (1) the general authority for the collection of this information is 35 U.S.C. 2(b)(2); (2) furnishing of the information solicited is voluntary; and (3) the principal purpose for which the information is used by the U.S. Patent and Trademark Office is to process and/or examine your submission related to a patent application or patent. If you do not furnish the requested information, the U.S. Patent and Trademark Office may not be able to process and/or examine your submission, which may result in termination of proceedings or abandonment of the application or expiration of the patent.

The information provided by you in this form will be subject to the following routine uses:

1. The information on this form will be treated confidentially to the extent allowed under the Freedom of Information Act (5 U.S.C. 552) and the Privacy Act (5 U.S.C. 552a). Records from this system of records may be disclosed to the Department of Justice to determine whether the Freedom of Information Act requires disclosure of these record s.

2. A record from this system of records may be disclosed, as a routine use, in the course of presenting evidence to a court, magistrate, or administrative tribunal, including disclosures to opposing counsel in the course of settlement negotiations.

3. A record in this system of records may be disclosed, as a routine use, to a Member of Congress submitting a request involving an individual, to whom the record pertains, when the individual has requested assistance from the Member with respect to the subject matter of the record.

4. A record in this system of records may be disclosed, as a routine use, to a contractor of the Agency having need for the information in order to perform a contract. Recipients of information shall be required to comply with the requirements of the Privacy Act of 1974, as amended, pursuant to 5 U.S.C. 552a(m).

5. A record related to an International Application filed under the Patent Cooperation Treaty in this system of records may be disclosed, as a routine use, to the International Bureau of the World Intellectual Property Organization, pursuant to the Patent Cooperation Treaty.

6. A record in this system of records may be disclosed, as a routine use, to another federal agency for purposes of National Security review (35 U.S.C. 181) and for review pursuant to the Atomic Energy Act (42 U.S.C. 218(c)).

7. A record from this system of records may be disclosed, as a routine use, to the Administrator, General Services, or his/her designee, during an inspection of records conducted by GSA as part of that agency's responsibility to recommend improvements in records management practices and programs, under authority of 44 U.S.C. 2904 and 2906. Such disclosure shall be made in accordance with the GSA regulations governing inspection of records for this purpose, and any other relevant (i.e., GSA or Commerce) directive. Such disclosure shall not be used to make determinations about individuals.

8. A record from this system of records may be disclosed, as a routine use, to the public after either publication of the application pursuant to 35 U.S.C. 122(b) or issuance of a patent pursuant to 35 U.S.C. 151. Further, a record may be disclosed, subject to the limitations of 37 CFR 1.14, as a routine use, to the public if the record was filed in an application which became abandoned or in which the proceedings were terminated and which application is referenced by either a published application, an application open to public inspections or an issued patent.

9. A record from this system of records may be disclosed, as a routine use, to a Federal, State, or local law enforcement agency, if the USPTO becomes aware of a violation or potential violation of law or regulation.

Electronic Patent Application Fee Transmittal

Application Number:	13744623
Filing Date:	18-Jan-2013
Title of Invention:	PORTION CAPSULE HAVING AN IDENTIFIER
First Named Inventor/Applicant Name:	Marc KRÜGER
Filer:	Bruce James Wolstoncroft/Kerri Smith
Attorney Docket Number:	26571-0030-C1

Filed as Large Entity

Filing Fees for **Utility under 35 USC 111(a)**

Description	Fee Code	Quantity	Amount	Sub-Total in USD($)
Basic Filing:				
Pages:				
Claims:				
Miscellaneous-Filing:				
Petition:				
Patent-Appeals-and-Interference:				
Post-Allowance-and-Post-Issuance:				
Extension-of-Time:				

Description	Fee Code	Quantity	Amount	Sub-Total in USD($)
Miscellaneous:				
Submission- Information Disclosure Stmt	1806	1	180	180
		Total in USD ($)		**180**

Electronic Acknowledgement Receipt

EFS ID:	23968187
Application Number:	13744623
International Application Number:	
Confirmation Number:	8894
Title of Invention:	PORTION CAPSULE HAVING AN IDENTIFIER
First Named Inventor/Applicant Name:	Marc KRÜGER
Customer Number:	26587
Filer:	Bruce James Wolstoncroft/Kerri Smith
Filer Authorized By:	Bruce James Wolstoncroft
Attorney Docket Number:	26571-0030-C1
Receipt Date:	03-NOV-2015
Filing Date:	18-JAN-2013
Time Stamp:	09:56:02
Application Type:	Utility under 35 USC 111(a)

Payment information:

Submitted with Payment	yes
Payment Type	Deposit Account
Payment was successfully received in RAM	$180
RAM confirmation Number	8808
Deposit Account	501059
Authorized User	SMITH, KERRI JO

The Director of the USPTO is hereby authorized to charge indicated fees and credit any overpayment as follows:

Charge any Additional Fees required under 37 C.F.R. Section 1.16 (National application filing, search, and examination fees)

Charge any Additional Fees required under 37 C.F.R. Section 1.17 (Patent application and reexamination processing fees)

Charge any Additional Fees required under 37 C.F.R. Section 1.19 (Document supply fees)

Charge any Additional Fees required under 37 C.F.R. Section 1.20 (Post Issuance fees)

Charge any Additional Fees required under 37 C.F.R. Section 1.21 (Miscellaneous fees and charges)

File Listing:

Document Number	Document Description	File Name	File Size(Bytes)/ Message Digest	Multi Part /.zip	Pages (if appl.)
1	Information Disclosure Statement (IDS) Form (SB08)	A4769646.PDF	612460 c876f1e6fa0fe213ba7ced5aa75088de8ceff62b	no	4
Warnings:					
Information:					
A U.S. Patent Number Citation or a U.S. Publication Number Citation is required in the Information Disclosure Statement (IDS) form for autoloading of data into USPTO systems. You may remove the form to add the required data in order to correct the Informational Message if you are citing U.S. References. If you chose not to include U.S. References, the image of the form will be processed and be made available within the Image File Wrapper (IFW) system. However, no data will be extracted from this form. Any additional data such as Foreign Patent Documents or Non Patent Literature will be manually reviewed and keyed into USPTO systems.					
2	Foreign Reference	A4769514.PDF	148697 e9f92373ce3b14bf0e82acea4699c96706edeb9a	no	1
Warnings:					
Information:					
3	Foreign Reference	A4769497.PDF	22184415 9fd03f25109f1a5e50023b6fadab936ab5208edb	no	25
Warnings:					
Information:					
4	Foreign Reference	A4769506.PDF	109507 7f8d3b4f35d529a42cd95af489eb386337a80c7b	no	2
Warnings:					
Information:					
5	Foreign Reference	A4769464.PDF	2530756 c8073aedf6c911c002764c3bb6f85738ebf36aa1	no	6
Warnings:					
Information:					
6	Foreign Reference	A4769443.PDF	3727503 f39083086f2c8d5e63a6619b3b7a13ee2306c565	no	5
Warnings:					
Information:					
7	Foreign Reference	A4775137.PDF	4145943 18a901875061026ecadf76e639237e083c6[illegible]	[illegible]	[illegible]

Warnings:					
Information:					
8	Fee Worksheet (SB06)	fee-info.pdf	30804 2e065fa4caa7dfac634ab903e7a1a397db86bfae	no	2
Warnings:					
Information:					
			Total Files Size (in bytes):	33490085	

This Acknowledgement Receipt evidences receipt on the noted date by the USPTO of the indicated documents, characterized by the applicant, and including page counts, where applicable. It serves as evidence of receipt similar to a Post Card, as described in MPEP 503.

New Applications Under 35 U.S.C. 111
If a new application is being filed and the application includes the necessary components for a filing date (see 37 CFR 1.53(b)-(d) and MPEP 506), a Filing Receipt (37 CFR 1.54) will be issued in due course and the date shown on this Acknowledgement Receipt will establish the filing date of the application.

National Stage of an International Application under 35 U.S.C. 371
If a timely submission to enter the national stage of an international application is compliant with the conditions of 35 U.S.C. 371 and other applicable requirements a Form PCT/DO/EO/903 indicating acceptance of the application as a national stage submission under 35 U.S.C. 371 will be issued in addition to the Filing Receipt, in due course.

New International Application Filed with the USPTO as a Receiving Office
If a new international application is being filed and the international application includes the necessary components for an international filing date (see PCT Article 11 and MPEP 1810), a Notification of the International Application Number and of the International Filing Date (Form PCT/RO/105) will be issued in due course, subject to prescriptions concerning national security, and the date shown on this Acknowledgement Receipt will establish the international filing date of the application.

PTO/SB/30EFS (07-09)
Approved for use through 07/31/2012. OMB 0651-0031
U.S. Patent and Trademark Office; U.S. DEPARTMENT OF COMMERCE
Under the Paperwork Reduction Act of 1995, no persons are required to respond to a collection of information unless it contains a valid OMB control number.

REQUEST FOR CONTINUED EXAMINATION(RCE)TRANSMITTAL
(Submitted Only via EFS-Web)

Application Number	13/744,623	Filing Date	2013-01-18	Docket Number (if applicable)	26571-0030-C1	Art Unit	1792
First Named Inventor	Mark KRÜGER			Examiner Name	Drew E. BECKER		

This is a Request for Continued Examination (RCE) under 37 CFR 1.114 of the above-identified application.
Request for Continued Examination (RCE) practice under 37 CFR 1.114 does not apply to any utility or plant application filed prior to June 8, 1995, or to any design application. The Instruction Sheet for this form is located at WWW.USPTO.GOV

SUBMISSION REQUIRED UNDER 37 CFR 1.114

Note: If the RCE is proper, any previously filed unentered amendments and amendments enclosed with the RCE will be entered in the order in which they were filed unless applicant instructs otherwise. If applicant does not wish to have any previously filed unentered amendment(s) entered, applicant must request non-entry of such amendment(s).

☐ Previously submitted. If a final Office action is outstanding, any amendments filed after the final Office action may be considered as a submission even if this box is not checked.

- ☐ Consider the arguments in the Appeal Brief or Reply Brief previously filed on _____
- ☐ Other _____

☒ Enclosed

- ☒ Amendment/Reply
- ☐ Information Disclosure Statement (IDS)
- ☐ Affidavit(s)/ Declaration(s)
- ☐ Other _____

MISCELLANEOUS

☐ Suspension of action on the above-identified application is requested under 37 CFR 1.103(c) for a period of months _____
(Period of suspension shall not exceed 3 months; Fee under 37 CFR 1.17(i) required)

☐ Other _____

FEES

The RCE fee under 37 CFR 1.17(e) is required by 37 CFR 1.114 when the RCE is filed.
☒ The Director is hereby authorized to charge any underpayment of fees, or credit any overpayments, to Deposit Account No 501059

SIGNATURE OF APPLICANT, ATTORNEY, OR AGENT REQUIRED

X Patent Practitioner Signature
Applicant Signature

PTO/SB/30EFS (07-09)
Approved for use through 07/31/2012. OMB 0651-0031
U.S. Patent and Trademark Office; U.S. DEPARTMENT OF COMMERCE
Under the Paperwork Reduction Act of 1995, no persons are required to respond to a collection of information unless it contains a valid OMB control number.

Signature of Registered U.S. Patent Practitioner			
Signature	/Bruce J. Wolstoncroft/	Date (YYYY-MM-DD)	2015-12-18
Name	Bruce J. Wolstoncroft	Registration Number	32075

This collection of information is required by 37 CFR 1.114. The information is required to obtain or retain a benefit by the public which is to file (and by the USPTO to process) an application. Confidentiality is governed by 35 U.S.C. 122 and 37 CFR 1.11 and 1.14. This collection is estimated to take 12 minutes to complete, including gathering, preparing, and submitting the completed application form to the USPTO. Time will vary depending upon the individual case. Any comments on the amount of time you require to complete this form and/or suggestions for reducing this burden, should be sent to the Chief Information Officer, U.S. Patent and Trademark Office, U.S. Department of Commerce, P.O. Box 1450, Alexandria, VA 22313-1450.

If you need assistance in completing the form, call 1-800-PTO-9199 and select option 2.

Privacy Act Statement

The Privacy Act of 1974 (P.L. 93-579) requires that you be given certain information in connection with your submission of the attached form related to a patent application or patent. Accordingly, pursuant to the requirements of the Act, please be advised that: (1) the general authority for the collection of this information is 35 U.S.C. 2(b)(2); (2) furnishing of the information solicited is voluntary; and (3) the principal purpose for which the information is used by the U.S. Patent and Trademark Office is to process and/or examine your submission related to a patent application or patent. If you do not furnish the requested information, the U.S. Patent and Trademark Office may not be able to process and/or examine your submission, which may result in termination of proceedings or abandonment of the application or expiration of the patent.

The information provided by you in this form will be subject to the following routine uses:

1. The information on this form will be treated confidentially to the extent allowed under the Freedom of Information Act (5 U.S.C. 552) and the Privacy Act (5 U.S.C. 552a). Records from this system of records may be disclosed to the Department of Justice to determine whether the Freedom of Information Act requires disclosure of these records.

2. A record from this system of records may be disclosed, as a routine use, in the course of presenting evidence to a court, magistrate, or administrative tribunal, including disclosures to opposing counsel in the course of settlement negotiations.

3. A record in this system of records may be disclosed, as a routine use, to a Member of Congress submitting a request involving an individual, to whom the record pertains, when the individual has requested assistance from the Member with respect to the subject matter of the record.

4. A record in this system of records may be disclosed, as a routine use, to a contractor of the Agency having need for the information in order to perform a contract. Recipients of information shall be required to comply with the requirements of the Privacy Act of 1974, as amended, pursuant to 5 U.S.C. 552a(m).

5. A record related to an International Application filed under the Patent Cooperation Treaty in this system of records may be disclosed, as a routine use, to the International Bureau of the World Intellectual Property Organization, pursuant to the Patent Cooperation Treaty.

6. A record in this system of records may be disclosed, as a routine use, to another federal agency for purposes of National Security review (35 U.S.C. 181) and for review pursuant to the Atomic Energy Act (42 U.S.C. 218(c)).

7. A record from this system of records may be disclosed, as a routine use, to the Administrator, General Services, or his/her designee, during an inspection of records conducted by GSA as part of that agency's responsibility to recommend improvements in records management practices and programs, under authority of 44 U.S.C. 2904 and 2906. Such disclosure shall be made in accordance with the GSA regulations governing inspection of records for this purpose, and any other relevant (i.e., GSA or Commerce) directive. Such disclosure shall not be used to make determinations about individuals.

8. A record from this system of records may be disclosed, as a routine use, to the public after either publication of the application pursuant to 35 U.S.C. 122(b) or issuance of a patent pursuant to 35 U.S.C. 151. Further, a record may be disclosed, subject to the limitations of 37 CFR 1.14, as a routine use, to the public if the record was filed in an application which became abandoned or in which the proceedings were terminated and which application is referenced by either a published application, an application open to public inspections or an issued patent.

9. A record from this system of records may be disclosed, as a routine use, to a Federal, State, or local law enforcement agency, if the USPTO becomes aware of a violation or potential violation of law or regulation.

Electronic Patent Application Fee Transmittal

Application Number:	13744623
Filing Date:	18-Jan-2013
Title of Invention:	PORTION CAPSULE HAVING AN IDENTIFIER
First Named Inventor/Applicant Name:	Marc KRÜGER
Filer:	Bruce James Wolstoncroft/Kerri Smith
Attorney Docket Number:	26571-0030-C1

Filed as Large Entity

Filing Fees for Utility under 35 USC 111(a)

Description	Fee Code	Quantity	Amount	Sub-Total in USD($)
Basic Filing:				
Pages:				
Claims:				
Miscellaneous-Filing:				
Petition:				
Patent-Appeals-and-Interference:				
Post-Allowance-and-Post-Issuance:				
Extension-of-Time:				

Description	Fee Code	Quantity	Amount	Sub-Total in USD($)
Miscellaneous:				
RCE- 2nd and Subsequent Request	1820	1	1700	1700
		Total in USD ($)		**1700**

Electronic Acknowledgement Receipt

EFS ID:	24409120
Application Number:	13744623
International Application Number:	
Confirmation Number:	8894
Title of Invention:	PORTION CAPSULE HAVING AN IDENTIFIER
First Named Inventor/Applicant Name:	Marc KRÜGER
Customer Number:	26587
Filer:	Bruce James Wolstoncroft/Kerri Smith
Filer Authorized By:	Bruce James Wolstoncroft
Attorney Docket Number:	26571-0030-C1
Receipt Date:	18-DEC-2015
Filing Date:	18-JAN-2013
Time Stamp:	13:14:30
Application Type:	Utility under 35 USC 111(a)

Payment information:

Submitted with Payment	yes
Payment Type	Deposit Account
Payment was successfully received in RAM	$1700
RAM confirmation Number	11403
Deposit Account	501059
Authorized User	SMITH, KERRI JO

The Director of the USPTO is hereby authorized to charge indicated fees and credit any overpayment as follows:

Charge any Additional Fees required under 37 C.F.R. Section 1.16 (National application filing, search, and examination fees)

Charge any Additional Fees required under 37 C.F.R. Section 1.17 (Patent application and reexamination processing fees)

Charge any Additional Fees required under 37 C.F.R. Section 1.19 (Document supply fees)

Charge any Additional Fees required under 37 C.F.R. Section 1.20 (Post Issuance fees)

Charge any Additional Fees required under 37 C.F.R. Section 1.21 (Miscellaneous fees and charges)

File Listing:

Document Number	Document Description	File Name	File Size(Bytes)/ Message Digest	Multi Part /.zip	Pages (if appl.)
1		A4850325.PDF	102261 3728da6bc42cfaaba435afd07ecc98d0dff889ca	yes	6
	Multipart Description/PDF files in .zip description				
	Document Description		**Start**	**End**	
	Amendment Submitted/Entered with Filing of CPA/RCE		1	1	
	Claims		2	3	
	Applicant Arguments/Remarks Made in an Amendment		4	6	
Warnings:					
Information:					
2	Request for Continued Examination (RCE)	A4847826.PDF	697793 20082881ce9d13e72038015817a62f201742e9de	no	3
Warnings:					
Information:					
3	Fee Worksheet (SB06)	fee-info.pdf	30792 0ea2ec4cd50f24c8a83e407a485e2eb5576cf7ad	no	2
Warnings:					
Information:					
		Total Files Size (in bytes):	830846		

This Acknowledgement Receipt evidences receipt on the noted date by the USPTO of the indicated documents, characterized by the applicant, and including page counts, where applicable. It serves as evidence of receipt similar to a Post Card, as described in MPEP 503.

New Applications Under 35 U.S.C. 111
If a new application is being filed and the application includes the necessary components for a filing date (see 37 CFR 1.53(b)-(d) and MPEP 506), a Filing Receipt (37 CFR 1.54) will be issued in due course and the date shown on this Acknowledgement Receipt will establish the filing date of the application.

National Stage of an International Application under 35 U.S.C. 371
If a timely submission to enter the national stage of an international application is compliant with the conditions of 35 U.S.C. 371 and other applicable requirements a Form PCT/DO/EO/903 indicating acceptance of the application as a national stage submission under 35 U.S.C. 371 will be issued in addition to the Filing Receipt, in due course.

New International Application Filed with the USPTO as a Receiving Office
If a new international application is being filed and the international application includes the necessary components for an international filing date (see PCT Article 11 and MPEP 1810), a Notification of the International Application Number and of the International Filing Date (Form PCT/RO/105) will be issued in due course, subject to prescriptions concerning national security, and the date shown on this Acknowledgement Receipt will establish the international filing date of the application.

IN THE UNITED STATES PATENT AND TRADEMARK OFFICE

In re Application of:	Mark KRÜGER	Confirmation No.:	8894
Application No.:	13/744,623	Group Art Unit:	1792
Filed:	January 18, 2013	Examiner:	Drew E. BECKER

For: PORTION CAPSULE HAVING AN IDENTIFIER

RESPONSE UNDER 37 C.F.R. 1.114

MAIL STOP AMENDMENT/AF
COMMISSIONER FOR PATENTS
P.O. BOX 1450
ALEXANDRIA, VA 22313-1450

Sir:

Please consider the following Response for the above-referenced Application.

INTRODUCTORY COMMENTS

This Response is filed in response to the Final Office Action dated September 18, 2015.

There are no **Amendments to the Specification** sections in this Response.

There are no **Amendments to the Drawings** section in this Response.

The **Amendments to the Claims** section begins on page 2 of this Response and any amendments to the claims are reflected in the listing of the claims included therein.

The **Remarks/Arguments** section begins on page 4 of this Response.

IPR2024-00304
Nespresso USA, Inc. Ex. 1050
Page 210 of 250

AMENDMENTS TO THE CLAIMS

This listing of the claims will replace all prior versions, and listings of claims in the Application.

1. (Canceled)

2. (Cancelled)

3. (Cancelled)

4. (Cancelled)

5. (Cancelled)

6. (Canceled)

7. (Canceled)

8. (Cancelled)

9. (Cancelled)

10. (Canceled)

11. (Canceled)

12. (Canceled)

13. (Canceled)

14. (Canceled)

15. (Canceled)

16. (Canceled)

17. (Canceled)

18. (Cancelled)

19. (New) Portion capsule for producing a beverage, comprising a base element having a cavity in which a beverage raw material is provided and which is closed by a membrane

fastened to the base element, and a base element comprising a flange, wherein it has a identifier in order to individualize the respective portion capsule, characterized in that the identifier is a gearwheel or a gearwheel's section, which is placed at the outer circumference of the flange or a sidewall of the base element.

20. (New) Portion capsule according to claim 19, characterized in that the teeth of the gearwheel or the gearwheel's segment are provided to be shaped substantially like a triangle, rectangle, quadrate or a wave.

21. (New) Portion capsule according to claim 19, characterized in that a sealing surface is provided at the flange.

22. (New) Portion capsule according to claim 19, characterized in that a filter element, which divides the cavity into a first region for accommodating the beverage raw material and a second region for accommodating a beverage extract, is arranged within the cavity.

23. (New) Portion capsule according to claim 19, characterized in that the filter element is made of a non-woven material.

24. (New) Use of a portion capsule according to claim 19 for preparing a hot beverage.

REMARKS

This Response is filed in response to the Final Office Action dated September 18, 2015.

Upon entry of this Response, claims 19-24 will be pending in the Application. Claims 1-18 have been cancelled.

In the outstanding Office Action, the Examiner rejected claims 10 and 14 under 35 U.S.C. 110(b) or 35 U.S.C. 112 (pre-AIA), second paragraph, as being indefinite, rejected claims 1 and 10-17 under pre-AIA 35 U.S.C. 103(a) as being unpatentable over Aker (U.S. 2010/0078480) (hereinafter "Aker") in view of Nojima et al. (U.S. 2001/0038204) (hereinafter "Nojima") and rejected claims 6-7 under pre-AIA 35 U.S.C. 103(a) as being unpatentable over Aker in view of Nojima and further in view of Lazaris et al. (U.S. 2001/0047724) (hereinafter "Lazaris").

Reconsideration and allowance of all pending claims is respectfully requested.

REJECTION UNDER 35 U.S.C. 112 AND 35 U.S.C. 103(a)

The Examiner rejected claims 1, 6, 7 and 10-17 under a combination of 35 U.S.C. 112(b) or 35 U.S.C. 112 (pre-AIA), second paragraph, and pre-AIA 35 U.S.C. 103(a). As claims 1, 6, 7 and 10-17 have been cancelled, the rejections are moot.

NEW CLAIMS 19-24

Claims 19-24 have been added and are presented to be patentable over the applied references.

Aker is directed to "[m]ultiple instances of the same barcode … [being] printed on the surface of the round ending section" (Aker: paragraph [0017]). Figure 3c is directed to a somewhat cylindrically symmetric embodiment of the product body.

Nojima is directed to "a tubular label having an inwardly facing surface provided thereon with lottery indicia or any other arbitrary information and adapted to be wrapped around a container body, and an elongated tubular member, as well as a labeled container" (Nojima: paragraph [0002]).

Nordskog is directed to a disposable beverage brewing chamber with closed vertically collapsible sidewalls and an open top defining a central cavity therewith. The sidewalls are

accordion pleated or telescopable. The container may include a handle which can be collapsible, as can the rim (s) to provide the chamber with a compact storage configuration.

Lazaris is directed to a beverage filter cartridge with a bottom wall, a front wall, a back wall, and side walls. The front, back and side walls extend upwardly from the bottom wall to a peripheral rim surrounding an upper opening. The side walls are appropriately contoured to define generally V-shaped first ledges extending between the front and back walls with the lower portions of the ledges being spaced above the container bottom, and the sides diverging upwardly at an angle .alpha. with respect to the vertical.

There is no teaching or suggestion in any of the cited references of a flange with an identifier to individualize the respective portion capsule, the identifier being a gearwheel or a gearwheel's section, which is placed at the outer circumference of the flange or a sidewall of the base element, as required in independent claim 19.

Therefore, it is respectfully submitted that claims 19-24 are not rendered obvious by Aker, Nojima, Nordskog, Lazaris or their combination and are therefore allowable.

CONCLUSION

In view of the above, Applicant respectfully requests reconsideration of the Application and withdrawal of the outstanding objections and rejections. Applicant respectfully submits that the claims are not anticipated by nor rendered obvious by the applied references or their combination and thus, are in condition for allowance. As the claims are not anticipated by nor rendered obvious in view of the applied art, Applicant requests allowance of all pending claims in a timely manner. If the Examiner believes that prosecution of this Application could be expedited by a telephone conference, the Examiner is encouraged to contact the Applicant.

The Commissioner is hereby authorized to charge any additional fees and credit any overpayments to Deposit Account No. 50-1059.

Respectfully submitted,
McNEES WALLACE & NURICK LLC

/Bruce J. Wolstoncroft/

By _____

Bruce J. Wolstoncroft
Reg. No. 32,075
100 Pine Street
P.O. Box 1166
Harrisburg, PA 17108-1166
Tel: (717) 581-3714

Date: December 18, 2015

PTO/SB/06 (09-11)
Approved for use through 1/31/2014. OMB 0651-0032
U.S. Patent and Trademark Office; U.S. DEPARTMENT OF COMMERCE
Under the Paperwork Reduction Act of 1995, no persons are required to respond to a collection of information unless it displays a valid OMB control number.

PATENT APPLICATION FEE DETERMINATION RECORD

Substitute for Form PTO-875

Application or Docket Number	Filing Date	
13/744,623	01/18/2013	☐ To be Mailed

ENTITY: ☒ LARGE ☐ SMALL ☐ MICRO

APPLICATION AS FILED – PART I

FOR	(Column 1) NUMBER FILED	(Column 2) NUMBER EXTRA	RATE ($)	FEE ($)
☐ BASIC FEE (37 CFR 1.16(a), (b), or (c))	N/A	N/A	N/A	
☐ SEARCH FEE (37 CFR 1.16(k), (i), or (m))	N/A	N/A	N/A	
☐ EXAMINATION FEE (37 CFR 1.16(o), (p), or (q))	N/A	N/A	N/A	
TOTAL CLAIMS (37 CFR 1.16(i))	minus 20 =	*	x $ =	
INDEPENDENT CLAIMS (37 CFR 1.16(h))	minus 3 =	*	x $ =	
☐ APPLICATION SIZE FEE (37 CFR 1.16(s))	If the specification and drawings exceed 100 sheets of paper, the application size fee due is $310 ($155 for small entity) for each additional 50 sheets or fraction thereof. See 35 U.S.C. 41(a)(1)(G) and 37 CFR 1.16(s).			
☐ MULTIPLE DEPENDENT CLAIM PRESENT (37 CFR 1.16(j))				
* If the difference in column 1 is less than zero, enter "0" in column 2.			TOTAL	

APPLICATION AS AMENDED – PART II

AMENDMENT

12/18/2015	(Column 1) CLAIMS REMAINING AFTER AMENDMENT		(Column 2) HIGHEST NUMBER PREVIOUSLY PAID FOR	(Column 3) PRESENT EXTRA	RATE ($)	ADDITIONAL FEE ($)
Total (37 CFR 1.16(i))	* 6	Minus	** 20	= 0	x $80 =	0
Independent (37 CFR 1.16(h))	* 1	Minus	***3	= 0	x $420 =	0
☐ Application Size Fee (37 CFR 1.16(s))						
☐ FIRST PRESENTATION OF MULTIPLE DEPENDENT CLAIM (37 CFR 1.16(j))						
					TOTAL ADD'L FEE	0

AMENDMENT

	(Column 1) CLAIMS REMAINING AFTER AMENDMENT		(Column 2) HIGHEST NUMBER PREVIOUSLY PAID FOR	(Column 3) PRESENT EXTRA	RATE ($)	ADDITIONAL FEE ($)
Total (37 CFR 1.16(i))	*	Minus	**	=	x $ =	
Independent (37 CFR 1.16(h))	*	Minus	***	=	x $ =	
☐ Application Size Fee (37 CFR 1.16(s))						
☐ FIRST PRESENTATION OF MULTIPLE DEPENDENT CLAIM (37 CFR 1.16(j))						
					TOTAL ADD'L FEE	

* If the entry in column 1 is less than the entry in column 2, write "0" in column 3.
** If the "Highest Number Previously Paid For" IN THIS SPACE is less than 20, enter "20".
*** If the "Highest Number Previously Paid For" IN THIS SPACE is less than 3, enter "3".
The "Highest Number Previously Paid For" (Total or Independent) is the highest number found in the appropriate box in column 1.

LIE
/ANNIE C. SINGLETON/

This collection of information is required by 37 CFR 1.16. The information is required to obtain or retain a benefit by the public which is to file (and by the USPTO to process) an application. Confidentiality is governed by 35 U.S.C. 122 and 37 CFR 1.14. This collection is estimated to take 12 minutes to complete, including gathering, preparing, and submitting the completed application form to the USPTO. Time will vary depending upon the individual case. Any comments on the amount of time you require to complete this form and/or suggestions for reducing this burden, should be sent to the Chief Information Officer, U.S. Patent and Trademark Office, U.S. Department of Commerce, P.O. Box 1450, Alexandria, VA 22313-1450. DO NOT SEND FEES OR COMPLETED FORMS TO THIS ADDRESS. **SEND TO: Commissioner for Patents, P.O. Box 1450, Alexandria, VA 22313-1450.**
If you need assistance in completing the form, call 1-800-PTO-9199 and select option 2.

UNITED STATES PATENT AND TRADEMARK OFFICE

UNITED STATES DEPARTMENT OF COMMERCE
United States Patent and Trademark Office
Address: COMMISSIONER FOR PATENTS
P.O. Box 1450
Alexandria, Virginia 22313-1450
www.uspto.gov

APPLICATION NO.	FILING DATE	FIRST NAMED INVENTOR	ATTORNEY DOCKET NO.	CONFIRMATION NO.
13/744,623	01/18/2013	Marc KRÜGER	26571-0030-C1	8894

26587 7590 01/07/2016
MCNEES WALLACE & NURICK LLC
100 PINE STREET
P.O. BOX 1166
HARRISBURG, PA 17108-1166

EXAMINER
BECKER, DREW E

ART UNIT	PAPER NUMBER
1792	

MAIL DATE	DELIVERY MODE
01/07/2016	PAPER

Please find below and/or attached an Office communication concerning this application or proceeding.

The time period for reply, if any, is set in the attached communication.

Office Action Summary	Application No. 13/744,623	Applicant(s) KRÜGER, MARC	
	Examiner DREW BECKER	Art Unit 1792	AIA (First Inventor to File) Status No

-- The MAILING DATE of this communication appears on the cover sheet with the correspondence address --

Period for Reply

A SHORTENED STATUTORY PERIOD FOR REPLY IS SET TO EXPIRE 3 MONTHS FROM THE MAILING DATE OF THIS COMMUNICATION.

- Extensions of time may be available under the provisions of 37 CFR 1.136(a). In no event, however, may a reply be timely filed after SIX (6) MONTHS from the mailing date of this communication.
- If NO period for reply is specified above, the maximum statutory period will apply and will expire SIX (6) MONTHS from the mailing date of this communication.
- Failure to reply within the set or extended period for reply will, by statute, cause the application to become ABANDONED (35 U.S.C. § 133). Any reply received by the Office later than three months after the mailing date of this communication, even if timely filed, may reduce any earned patent term adjustment. See 37 CFR 1.704(b).

Status

1)☒ Responsive to communication(s) filed on 12/18/15.

☐ A declaration(s)/affidavit(s) under **37 CFR 1.130(b)** was/were filed on _____.

2a)☐ This action is **FINAL**. 2b)☒ This action is non-final.

3)☐ An election was made by the applicant in response to a restriction requirement set forth during the interview on _____; the restriction requirement and election have been incorporated into this action.

4)☐ Since this application is in condition for allowance except for formal matters, prosecution as to the merits is closed in accordance with the practice under *Ex parte Quayle*, 1935 C.D. 11, 453 O.G. 213.

Disposition of Claims*

5)☒ Claim(s) 19-24 is/are pending in the application.

5a) Of the above claim(s) 24 is/are withdrawn from consideration.

6)☐ Claim(s) _____ is/are allowed.

7)☒ Claim(s) 19-23 is/are rejected.

8)☐ Claim(s) _____ is/are objected to.

9)☐ Claim(s) _____ are subject to restriction and/or election requirement.

* If any claims have been determined allowable, you may be eligible to benefit from the **Patent Prosecution Highway** program at a participating intellectual property office for the corresponding application. For more information, please see http://www.uspto.gov/patents/init_events/pph/index.jsp or send an inquiry to PPHfeedback@uspto.gov.

Application Papers

10)☐ The specification is objected to by the Examiner.

11)☐ The drawing(s) filed on _____ is/are: a)☐ accepted or b)☐ objected to by the Examiner.

Applicant may not request that any objection to the drawing(s) be held in abeyance. See 37 CFR 1.85(a).

Replacement drawing sheet(s) including the correction is required if the drawing(s) is objected to. See 37 CFR 1.121(d).

Priority under 35 U.S.C. § 119

12)☐ Acknowledgment is made of a claim for foreign priority under 35 U.S.C. § 119(a)-(d) or (f).

Certified copies:

a)☐ All b)☐ Some** c)☐ None of the:

1.☐ Certified copies of the priority documents have been received.

2.☐ Certified copies of the priority documents have been received in Application No. _____.

3.☐ Copies of the certified copies of the priority documents have been received in this National Stage application from the International Bureau (PCT Rule 17.2(a)).

** See the attached detailed Office action for a list of the certified copies not received.

Attachment(s)

1) ☒ Notice of References Cited (PTO-892)

2) ☒ Information Disclosure Statement(s) (PTO/SB/08a and/or PTO/SB/08b) Paper No(s)/Mail Date 11/3/15.

3) ☐ Interview Summary (PTO-413) Paper No(s)/Mail Date. _____ .

4) ☐ Other: _____.

IPR2024-00304
Nespresso USA, Inc. Ex. 1050
Page 218 of 250

The present application is being examined under the pre-AIA first to invent provisions.

DETAILED ACTION

Continued Examination Under 37 CFR 1.114

1. A request for continued examination under 37 CFR 1.114, including the fee set forth in 37 CFR 1.17(e), was filed in this application after final rejection. Since this application is eligible for continued examination under 37 CFR 1.114, and the fee set forth in 37 CFR 1.17(e) has been timely paid, the finality of the previous Office action has been withdrawn pursuant to 37 CFR 1.114. Applicant's submission filed on 12/18/15 has been entered.

Election/Restrictions

2. Newly submitted claim 24 is directed to an invention that is independent or distinct from the invention originally claimed for the following reasons: the product of claim 1 can be used to practice another and materially different process, such as producing non-hot beverages including iced coffee.

Since applicant has received an action on the merits for the originally presented invention, this invention has been constructively elected by original presentation for prosecution on the merits. Accordingly, claim 24 is withdrawn from consideration as being directed to a non-elected invention. See 37 CFR 1.142(b) and MPEP § 821.03.

Claim Rejections - 35 USC § 112

3. The following is a quotation of 35 U.S.C. 112(b):
(b) CONCLUSION.—The specification shall conclude with one or more claims particularly pointing out and distinctly claiming the subject matter which the inventor or a joint inventor regards as the invention.

The following is a quotation of 35 U.S.C. 112 (pre-AIA), second paragraph:
The specification shall conclude with one or more claims particularly pointing out and distinctly claiming the subject matter which the applicant regards as his invention.

4. Claims 19-23 are rejected under 35 U.S.C. 112(b) or 35 U.S.C. 112 (pre-AIA), second paragraph, as being indefinite for failing to particularly point out and distinctly claim the subject matter which the inventor or a joint inventor, or for pre-AIA the applicant regards as the invention.

5. Claim 19, line 3 recites “a base element”. It is not clear if this is the previously mentioned “base element” or a further “base element”.

6. Claim 19, line 3 recites “it”. It is not clear what “it” is. It is not clear if this refers to the base element, flange, portion capsule, or some other structure.

7. Claim 20 recites the limitation "the teeth". There is insufficient antecedent basis for this limitation in the claim.

8. Claim 20 recites the limitation "the gearwheel’s segment". There is insufficient antecedent basis for this limitation in the claim. It is not clear if this is the same element as the gearwheel “section” or not.

Claim Rejections - 35 USC § 102

9. The following is a quotation of the appropriate paragraphs of pre-AIA 35 U.S.C. 102 that form the basis for the rejections under this section made in this Office action:

> A person shall be entitled to a patent unless –
>
> (b) the invention was patented or described in a printed publication in this or a foreign country or in public use or on sale in this country, more than one year prior to the date of application for patent in the United States.

10. Claims 19-23 are rejected under pre-AIA 35 U.S.C. 102(b) as being anticipated by Sweeney et al [Pat. No. 6,645,537].

Sweeney et al teach a beverage filter cartridge comprising a base element with a flange (Figure 2 & 4, #12, 22), a lid/membrane fastened to the base element (Figure 2 & 4, #16; column 4, lines 20-24), a filter element defining a cavity containing beverage raw material (Figure 2 & 4, #14, A, M; column 4, lines 30-34), an identifier in the form of a gearwheel formed on a sidewall of the base element (Figure 1 & 5, #20; Figure 7, #20e), the flutes forming the teeth of the gearwheel and having a wave shape (Figure 5, #20), the flange having a sealing surface for the lid (Figure 4, #16, 22), the filter element dividing the cavity into a region for the beverage raw material and a region for the beverage extract (Figure 4, #14, A, B), and the filter element being made form a non-woven material (column 4, lines 15-19).

Response to Arguments

11. Applicant's arguments with respect to claims 19-23 have been considered but are moot because the arguments do not apply to any of the references being used in the current rejection.

Any inquiry concerning this communication or earlier communications from the examiner should be directed to DREW BECKER whose telephone number is (571)272-1396. The examiner can normally be reached on Mon.-Fri. 9am to 5:30pm.

If attempts to reach the examiner by telephone are unsuccessful, the examiner's supervisor, Erik Kashnikow can be reached on 571-270-3475. The fax phone number for the organization where this application or proceeding is assigned is 571-273-8300.

Information regarding the status of an application may be obtained from the Patent Application Information Retrieval (PAIR) system. Status information for published applications may be obtained from either Private PAIR or Public PAIR. Status information for unpublished applications is available through Private PAIR only. For more information about the PAIR system, see http://pair-direct.uspto.gov. Should you have questions on access to the Private PAIR system, contact the Electronic Business Center (EBC) at 866-217-9197 (toll-free). If you would like assistance from a USPTO Customer Service Representative or access to the automated information system, call 800-786-9199 (IN USA OR CANADA) or 571-272-1000.

/DREW BECKER/
Primary Examiner, Art Unit 1792

Notice of References Cited	Application/Control No. 13/744,623	Applicant(s)/Patent Under Reexamination KRÜGER, MARC	
	Examiner DREW BECKER	Art Unit 1792	Page 1 of 1

U.S. PATENT DOCUMENTS

*		Document Number Country Code-Number-Kind Code	Date MM-YYYY	Name	CPC Classification	US Classification
*	A	US-6,645,537 B2	11-2003	Sweeney; Richard	B65D85/8043	206/222
*	B	US-6,655,260 B2	12-2003	Lazaris; Nicholas G.	A47J31/0668	99/295
*	C	US-2002/0048621 A1	04-2002	Boyd, David D.	A47J31/3623	426/77
*	D	US-6,994,879 B2	02-2006	Cirigliano; Michael Charles	A47J31/0642	426/433
	E	US-				
	F	US-				
	G	US-				
	H	US-				
	I	US-				
	J	US-				
	K	US-				
	L	US-				
	M	US-				

FOREIGN PATENT DOCUMENTS

*		Document Number Country Code-Number-Kind Code	Date MM-YYYY	Country	Name	CPC Classification
	N					
	O					
	P					
	Q					
	R					
	S					
	T					

NON-PATENT DOCUMENTS

*		Include as applicable: Author, Title Date, Publisher, Edition or Volume, Pertinent Pages)
	U	
	V	
	W	
	X	

*A copy of this reference is not being furnished with this Office action. (See MPEP § 707.05(a).)
Dates in MM-YYYY format are publication dates. Classifications may be US or foreign.

Search Notes	Application/Control No.	Applicant(s)/Patent Under Reexamination
	13744623	KRÜGER ET AL.
	Examiner	**Art Unit**
	Drew Becker	1792

CPC- SEARCHED

Symbol	Date	Examiner
B65D 2081/007, 85/8046; A47J 31/3676-31/3695, 31/4492	9/12/14	deb
updated	1/4/16	deb

CPC COMBINATION SETS - SEARCHED

Symbol	Date	Examiner

US CLASSIFICATION SEARCHED

Class	Subclass	Date	Examiner
426	077	5/16/2013	DMP
426	87,77,79,115,594-597,433,383,394	9/12/14	deb
99	295	9/12/14	deb
search	updated	1/4/16	deb

SEARCH NOTES

Search Notes	Date	Examiner
Inventor search.	5/16/2013	DMP
EAST text search.	5/16/2013	DMP
EAST/WEST:coffee,tea,beverage,pod,capsule,cartridge,container,identif,control,monitor,adjust,	9/12/14	deb
updated	1/4/16	deb

INTERFERENCE SEARCH

US Class/ CPC Symbol	US Subclass / CPC Group	Date	Examiner

IPR2024-00304
Nespresso USA, Inc. Ex. 1050
Page 224 of 250

PTO/SB/08a (01-10)
Approved for use through 07/31/2012. OMB 0651-0031
U.S. Patent and Trademark Office; U.S. DEPARTMENT OF COMMERCE
Under the Paperwork Reduction Act of 1995, no persons are required to respond to a collection of information unless it contains a valid OMB control number.

INFORMATION DISCLOSURE STATEMENT BY APPLICANT

(Not for submission under 37 CFR 1.99)

Application Number	13744623
Filing Date	2013-01-18
First Named Inventor	Marc KRÜGER
Art Unit	1792
Examiner Name	BECKER, DREW E
Attorney Docket Number	26571-0030-C1

U.S.PATENTS Remove

Examiner Initial*	Cite No	Patent Number	Kind Code[1]	Issue Date	Name of Patentee or Applicant of cited Document	Pages,Columns,Lines where Relevant Passages or Relevant Figures Appear
	1					

If you wish to add additional U.S. Patent citation information please click the Add button. Add

U.S.PATENT APPLICATION PUBLICATIONS Remove

Examiner Initial*	Cite No	Publication Number	Kind Code[1]	Publication Date	Name of Patentee or Applicant of cited Document	Pages,Columns,Lines where Relevant Passages or Relevant Figures Appear
	1					

If you wish to add additional U.S. Published Application citation information please click the Add button. Add

FOREIGN PATENT DOCUMENTS Remove

Examiner Initial*	Cite No	Foreign Document Number[3]	Country Code[2] ¡	Kind Code[4]	Publication Date	Name of Patentee or Applicant of cited Document	Pages,Columns,Lines where Relevant Passages or Relevant Figures Appear	T[5]
	1	2010516364	JP	A	2010-05-20			☐
	2	2008/090122	WO	A2	2008-07-31	Nestec S.A.		☐
	3	2007522856	JP	A	2007-08-16			☐

ALL REFERENCES CONSIDERED EXCEPT WHERE LINED THROUGH. /D.E.B/

INFORMATION DISCLOSURE STATEMENT BY APPLICANT

(Not for submission under 37 CFR 1.99)

Application Number	13744623
Filing Date	2013-01-18
First Named Inventor	Marc KRÜGER
Art Unit	1792
Examiner Name	BECKER, DREW E
Attorney Docket Number	26571-0030-C1

	4	2005079638	WO	A1	2005-09-01	Kraft Foods R & D Inc.		☐
	5	2001082699	JP	A	2001-03-30	Suzuki Akitomo, Suzuki Masayo		☐
	6	H0394377	JP	A	1991-04-19	Nec Corp		☐

If you wish to add additional Foreign Patent Document citation information please click the Add button Add

NON-PATENT LITERATURE DOCUMENTS Remove

Examiner Initials*	Cite No	Include name of the author (in CAPITAL LETTERS), title of the article (when appropriate), title of the item (book, magazine, journal, serial, symposium, catalog, etc), date, pages(s), volume-issue number(s), publisher, city and/or country where published.	T[5]
	1		☐

If you wish to add additional non-patent literature document citation information please click the Add button Add

EXAMINER SIGNATURE

Examiner Signature	/DREW E BECKER/	Date Considered	01/04/2016

*EXAMINER: Initial if reference considered, whether or not citation is in conformance with MPEP 609. Draw line through a citation if not in conformance and not considered. Include copy of this form with next communication to applicant.

[1] See Kind Codes of USPTO Patent Documents at www.USPTO.GOV or MPEP 901.04. [2] Enter office that issued the document, by the two-letter code (WIPO Standard ST.3). [3] For Japanese patent documents, the indication of the year of the reign of the Emperor must precede the serial number of the patent document. [4] Kind of document by the appropriate symbols as indicated on the document under WIPO Standard ST.16 if possible. [5] Applicant is to place a check mark here if English language translation is attached.

ALL REFERENCES CONSIDERED EXCEPT WHERE LINED THROUGH. /D.E.B/

INFORMATION DISCLOSURE STATEMENT BY APPLICANT

(Not for submission under 37 CFR 1.99)

Application Number	13744623
Filing Date	2013-01-18
First Named Inventor	Marc KRÜGER
Art Unit	1792
Examiner Name	BECKER, DREW E
Attorney Docket Number	26571-0030-C1

CERTIFICATION STATEMENT

Please see 37 CFR 1.97 and 1.98 to make the appropriate selection(s):

☒ That each item of information contained in the information disclosure statement was first cited in any communication from a foreign patent office in a counterpart foreign application not more than three months prior to the filing of the information disclosure statement. See 37 CFR 1.97(e)(1).

OR

☐ That no item of information contained in the information disclosure statement was cited in a communication from a foreign patent office in a counterpart foreign application, and, to the knowledge of the person signing the certification after making reasonable inquiry, no item of information contained in the information disclosure statement was known to any individual designated in 37 CFR 1.56(c) more than three months prior to the filing of the information disclosure statement. See 37 CFR 1.97(e)(2).

☐ See attached certification statement.

☒ The fee set forth in 37 CFR 1.17 (p) has been submitted herewith.

☐ A certification statement is not submitted herewith.

SIGNATURE

A signature of the applicant or representative is required in accordance with CFR 1.33, 10.18. Please see CFR 1.4(d) for the form of the signature.

Signature	/Bruce J. Wolstoncroft/	Date (YYYY-MM-DD)	2015-11-03
Name/Print	Bruce J. Wolstoncroft	Registration Number	32,075

This collection of information is required by 37 CFR 1.97 and 1.98. The information is required to obtain or retain a benefit by the public which is to file (and by the USPTO to process) an application. Confidentiality is governed by 35 U.S.C. 122 and 37 CFR 1.14. This collection is estimated to take 1 hour to complete, including gathering, preparing and submitting the completed application form to the USPTO. Time will vary depending upon the individual case. Any comments on the amount of time you require to complete this form and/or suggestions for reducing this burden, should be sent to the Chief Information Officer, U.S. Patent and Trademark Office, U.S. Department of Commerce, P.O. Box 1450, Alexandria, VA 22313-1450. DO NOT SEND FEES OR COMPLETED FORMS TO THIS ADDRESS. **SEND TO: Commissioner for Patents, P.O. Box 1450, Alexandria, VA 22313-1450.**

ALL REFERENCES CONSIDERED EXCEPT WHERE LINED THROUGH. /D.E.B/

Privacy Act Statement

The Privacy Act of 1974 (P.L. 93-579) requires that you be given certain information in connection with your submission of the attached form related to a patent application or patent. Accordingly, pursuant to the requirements of the Act, please be advised that: (1) the general authority for the collection of this information is 35 U.S.C. 2(b)(2); (2) furnishing of the information solicited is voluntary; and (3) the principal purpose for which the information is used by the U.S. Patent and Trademark Office is to process and/or examine your submission related to a patent application or patent. If you do not furnish the requested information, the U.S. Patent and Trademark Office may not be able to process and/or examine your submission, which may result in termination of proceedings or abandonment of the application or expiration of the patent.

The information provided by you in this form will be subject to the following routine uses:

1. The information on this form will be treated confidentially to the extent allowed under the Freedom of Information Act (5 U.S.C. 552) and the Privacy Act (5 U.S.C. 552a). Records from this system of records may be disclosed to the Department of Justice to determine whether the Freedom of Information Act requires disclosure of these record s.

2. A record from this system of records may be disclosed, as a routine use, in the course of presenting evidence to a court, magistrate, or administrative tribunal, including disclosures to opposing counsel in the course of settlement negotiations.

3. A record in this system of records may be disclosed, as a routine use, to a Member of Congress submitting a request involving an individual, to whom the record pertains, when the individual has requested assistance from the Member with respect to the subject matter of the record.

4. A record in this system of records may be disclosed, as a routine use, to a contractor of the Agency having need for the information in order to perform a contract. Recipients of information shall be required to comply with the requirements of the Privacy Act of 1974, as amended, pursuant to 5 U.S.C. 552a(m).

5. A record related to an International Application filed under the Patent Cooperation Treaty in this system of records may be disclosed, as a routine use, to the International Bureau of the World Intellectual Property Organization, pursuant to the Patent Cooperation Treaty.

6. A record in this system of records may be disclosed, as a routine use, to another federal agency for purposes of National Security review (35 U.S.C. 181) and for review pursuant to the Atomic Energy Act (42 U.S.C. 218(c)).

7. A record from this system of records may be disclosed, as a routine use, to the Administrator, General Services, or his/her designee, during an inspection of records conducted by GSA as part of that agency's responsibility to recommend improvements in records management practices and programs, under authority of 44 U.S.C. 2904 and 2906. Such disclosure shall be made in accordance with the GSA regulations governing inspection of records for this purpose, and any other relevant (i.e., GSA or Commerce) directive. Such disclosure shall not be used to make determinations about individuals.

8. A record from this system of records may be disclosed, as a routine use, to the public after either publication of the application pursuant to 35 U.S.C. 122(b) or issuance of a patent pursuant to 35 U.S.C. 151. Further, a record may be disclosed, subject to the limitations of 37 CFR 1.14, as a routine use, to the public if the record was filed in an application which became abandoned or in which the proceedings were terminated and which application is referenced by either a published application, an application open to public inspections or an issued patent.

9. A record from this system of records may be disclosed, as a routine use, to a Federal, State, or local law enforcement agency, if the USPTO becomes aware of a violation or potential violation of law or regulation.

ALL REFERENCES CONSIDERED EXCEPT WHERE LINED THROUGH. /D.E.B/

IN THE UNITED STATES PATENT AND TRADEMARK OFFICE

In re Application of:	Marc KRÜGER	:	Confirmation No.:	8894
Application No.:	13/744,623	:	Group Art Unit:	1792
Filed:	January 18, 2013	:	Examiner:	Drew E. BECKER

For: PORTION CAPSULE HAVING AN IDENTIFIER

RESPONSE UNDER 37 C.F.R. 1.111

MAIL STOP AMENDMENT
COMMISSIONER FOR PATENTS
P.O. BOX 1450
ALEXANDRIA, VA 22313-1450

Sir:

Please consider the following Response for the above-referenced Application.

INTRODUCTORY COMMENTS

This Response is filed in response to the Non-Final Office Action dated January 7, 2016.

There is no **Amendments to the Specification** section in this Response.

There is no **Amendments to the Drawing** section in this Response.

The **Amendments to the Claims** section begins on page 2 of this Response and any amendments to the claims are reflected in the listing of the claims included therein.

The **Remarks/Arguments** section begins on page 4 of this Response.

AMENDMENTS TO THE CLAIMS

This listing of the claims will replace all prior versions, and listings of claims in the Application.

1. (Cancelled)

2. (Cancelled)

3. (Cancelled)

4. (Cancelled)

5. (Cancelled)

6. (Cancelled)

7. (Cancelled)

8. (Cancelled)

9. (Cancelled)

10. (Cancelled)

11. (Cancelled)

12. (Cancelled)

13. (Cancelled)

14. (Cancelled)

15. (Cancelled)

16. (Cancelled)

17. (Cancelled)

18. (Cancelled)

19. (Currently Amended) Portion capsule for producing a beverage, comprising a base element having a cavity in which a beverage raw material is provided and which is closed

by a membrane fastened to the base element, ~~and a~~ the base element comprising a flange, wherein ~~it has a identifier in order to individualize the respective portion capsule, characterized in that the identifier is~~ a gearwheel or a gearwheel's section is provided, which is placed at the outer circumference of ~~the flange or~~ a sidewall of the base element and wherein the diameter of a sidewall region of the sidewall of base element which adjoins the flange to the diameter of the flange is between 0.85 and 0.89.

20. (Currently Amended) Portion capsule according to claim 19, characterized in that ~~the~~ teeth of the gearwheel or the gearwheel's ~~segment~~ section are provided to be shaped substantially like a triangle, rectangle, quadrate or a wave.

21. (Previously Presented) Portion capsule according to claim 19, characterized in that a sealing surface is provided at the flange.

22. (Previously Presented) Portion capsule according to claim 19, characterized in that a filter element, which divides the cavity into a first region for accommodating the beverage raw material and a second region for accommodating a beverage extract, is arranged within the cavity.

23. (Previously Presented) Portion capsule according to claim 19, characterized in that the filter element is made of a non-woven material.

24. (Previously Presented) Use of a portion capsule according to claim 19 for preparing a hot beverage.

REMARKS

This Response is filed in response to the Non-Final Office Action dated January 7, 2016.

Upon entry of this Response, claims 19-24 will be pending in the Application. Claims 1-18 were previously cancelled.

In the outstanding Office Action, the Examiner rejected claims 19-23 under 35 U.S.C. 112(b) or 35 U.S.C. 112 (pre-AIA), second paragraph, as being indefinite and rejected claims 19-23 under pre-AIA 35 U.S.C. 102(b) as being anticipated by Sweeney et al (U.S. 6,645,537) (hereinafter "Sweeney")

Reconsideration and allowance of all pending claims is respectfully requested.

REJECTION UNDER 35 U.S.C. 112

The Examiner rejected claims 19-23 under 35 U.S.C. 112(b) or 35 U.S.C. 112 (pre-AIA), second paragraph, as being indefinite for failing to particularly point out and distinctly claim the subject matter applicant regards as the invention. The Examiner's reasoning begins on page 3 of the Office Action and will not be repeated herein.

In response thereto, Applicant has amended claims 19 and 20 in a manner that is believed to overcome the Examiner's rejection.

Therefore, in view of the above, Applicant submits that claims 19-23 are not indefinite and comply with the provisions of 35 U.S.C. 112, second paragraph, and therefore are allowable.

REJECTION UNDER 35 U.S.C. 102

The Examiner rejected claims 19-23 under 35 U.S.C. 102(b) as being anticipated by Sweeney. The Examiner's reasoning begins on page 4 of the Office Action and will not be repeated herein.

Sweeney, as understood, is directed to a beverage filter cartridge includes a cup-shaped outer container with a bottom and a side wall extending upwardly from the bottom wall to a circular rim surrounding an upper opening. The side wall has an upper section extending downwardly from the rim to an intermediate section, and a tapered lower section configured to provide a plurality of circumferentially spaced flutes extending downwardly from the intermediate section

to the bottom wall. The depths "d" of the flutes 20e gradually increase from a minimum at their upper ends to a maximum at their lower ends. Likewise, as can be seen from FIG. 7, the widths "w" of the flutes also gradually increase from a minimum at their upper ends to a maximum at their lower ends. The downwardly diverging and gradually deepening of the flutes serves to promote downward flow of the brewed beverage in chamber B while beneficially encouraging turbulence.

In contrast, the invention as claimed in amended independent claim 19 is directed to a portion capsule with a gearwheel or a gearwheel's section placed at the outer circumference of a sidewall of the base element and wherein the diameter of a sidewall region of the sidewall of base element which adjoins the flange to the diameter of the flange is between 0.85 and 0.89.

There is no teaching or suggestion in Sweeney of at least the following: i) gearwheel or a gearwheel's section is placed at the outer circumference of a sidewall of the base element; or ii) the diameter of a sidewall region of the sidewall of base element which adjoins the flange to the diameter of the flange is between 0.85 and 0.89. Sweeney merely teaches of flutes which promote downward flow of the brewed beverage in chamber.

According to the present invention, it is an advantage that it is possible to increase the stability of the portion capsule's wall region, to realize improved turbulences of the extraction liquid and thereby to improve the extraction's process under the same conditions, for example, such as material thickness and the like. Another advantage is that it is easy to generate a mechanical identifier or a mechanical fitting that matches with a fitting tool that belongs to the device for producing a beverage. According to the invention, it is a further advantage that, for example, a gearwheel, which is attached to the device for producing a beverage and is, for example, located in the region of the media chute or similar, can possibly interacts with the gearwheel's contour of the portion capsule. In this way, it is possible to generate a mechanical fitting that allows to individualize the portion capsule as a proper one and/or to specify the sort of portion capsule and/or to rotate the portion capsule about an axis of rotation, that is perpendicular to the membrane's main plane, by using the gearwheel's arrangement. Such an embodiment of the invention makes it possible that the portion capsule is always opened with the

device for producing a beverage on the same spot (with respect to its angular position), and therefore the raw material is extracted on the same manner.

The teaching of flutes in Sweeney is not equivalent to the teaching of a gearwheel as claimed in the present invention.

In addition, according to the present invention as claimed, the portion capsules are manufactured in such a way that the ratio of the diameter of that wall region of the base element which adjoins the flange to the diameter of the flange is between 0.85 and 0.89, thereby providing a portion capsule which is much stiffer than known capsules.

Sweeney does not teach or suggest the ratio as claimed in the present invention.

The examiner is reminded that "'[a] claim is anticipated only if each and every element as set forth in the claim is found, either expressly or inherently described, in a single prior art reference.' Verdegaal Bros. v. Union Oil Co. of California, 814 F.2d 628, 631, 2 USPQ2d 1051, 1053 (Fed. Cir. 1987)." See Manual of Patent Examining Procedure, 8th Edition (MPEP), Section 2131. In addition, if just one claim limitation is not accounted for, then the examiner has failed to present a prima facie case of obviousness. To support an obviousness rejection "[a]ll words in a claim must be considered in judging the patentability of that claim against the prior art." In re Wilson, 424 F.2d 1382, 1385 (CCPA 1970).

Thus, since Sweeney does not teach or suggest all of the limitations recited in amended independent claim 19, Applicant respectfully submits that amended independent claim 19 is not anticipated nor rendered obvious by Sweeney, and Applicant requests withdrawal of the rejection of independent claim 19.

Dependent claims 20-23 are believed to be distinguishable from Sweeney as depending from what are believed to be allowable independent claim 19 as discussed above. In addition, claims 20-23 recite further limitations that distinguish over the applied art.

In conclusion, it is respectfully submitted that claims 19-23 are not anticipated nor rendered obvious by Sweeney and are therefore allowable.

CONCLUSION

In view of the above, Applicant respectfully requests reconsideration of the Application and withdrawal of the outstanding objections and rejections. As a result of the amendments and remarks presented herein, Applicant respectfully submits that the pending claims are not anticipated by nor rendered obvious by the applied references or their combination and thus, are in condition for allowance. As the claims are not anticipated by nor rendered obvious in view of the applied art, Applicant requests allowance of all pending claims in a timely manner. If the Examiner believes that prosecution of this Application could be expedited by a telephone conference, the Examiner is encouraged to contact the Applicant.

The Commissioner is hereby authorized to charge any additional fees and credit any overpayments to Deposit Account No. 50-1059.

Respectfully submitted,
McNEES WALLACE & NURICK LLC

By **/Bruce J. Wolstoncroft/**

Bruce J. Wolstoncroft
Reg. No. 32,075
100 Pine Street
P.O. Box 1166
Harrisburg, PA 17108-1166
Tel: (717) 581-3714

Date: April 6, 2016

Electronic Acknowledgement Receipt

EFS ID:	25410722
Application Number:	13744623
International Application Number:	
Confirmation Number:	8894
Title of Invention:	PORTION CAPSULE HAVING AN IDENTIFIER
First Named Inventor/Applicant Name:	Marc KRÜGER
Customer Number:	26587
Filer:	Bruce James Wolstoncroft/Kerri Smith
Filer Authorized By:	Bruce James Wolstoncroft
Attorney Docket Number:	26571-0030-C1
Receipt Date:	06-APR-2016
Filing Date:	18-JAN-2013
Time Stamp:	11:16:59
Application Type:	Utility under 35 USC 111(a)

Payment information:

Submitted with Payment	no

File Listing:

Document Number	Document Description	File Name	File Size(Bytes)/ Message Digest	Multi Part /.zip	Pages (if appl.)
1		A5039654.PDF	100478 a1653c72877a30fa52c6f4a442bb737d696b8b2c	yes	7

	Multipart Description/PDF files in .zip description		
	Document Description	**Start**	**End**
	Amendment/Req. Reconsideration-After Non-Final Reject	1	1
	Claims	2	3
	Applicant Arguments/Remarks Made in an Amendment	4	7

Warnings:	
Information:	
Total Files Size (in bytes):	100478

This Acknowledgement Receipt evidences receipt on the noted date by the USPTO of the indicated documents, characterized by the applicant, and including page counts, where applicable. It serves as evidence of receipt similar to a Post Card, as described in MPEP 503.

New Applications Under 35 U.S.C. 111
If a new application is being filed and the application includes the necessary components for a filing date (see 37 CFR 1.53(b)-(d) and MPEP 506), a Filing Receipt (37 CFR 1.54) will be issued in due course and the date shown on this Acknowledgement Receipt will establish the filing date of the application.

National Stage of an International Application under 35 U.S.C. 371
If a timely submission to enter the national stage of an international application is compliant with the conditions of 35 U.S.C. 371 and other applicable requirements a Form PCT/DO/EO/903 indicating acceptance of the application as a national stage submission under 35 U.S.C. 371 will be issued in addition to the Filing Receipt, in due course.

New International Application Filed with the USPTO as a Receiving Office
If a new international application is being filed and the international application includes the necessary components for an international filing date (see PCT Article 11 and MPEP 1810), a Notification of the International Application Number and of the International Filing Date (Form PCT/RO/105) will be issued in due course, subject to prescriptions concerning national security, and the date shown on this Acknowledgement Receipt will establish the international filing date of the application.

PTO/SB/06 (09-11)
Approved for use through 1/31/2014. OMB 0651-0032
U.S. Patent and Trademark Office; U.S. DEPARTMENT OF COMMERCE
Under the Paperwork Reduction Act of 1995, no persons are required to respond to a collection of information unless it displays a valid OMB control number.

PATENT APPLICATION FEE DETERMINATION RECORD

Substitute for Form PTO-875

Application or Docket Number	Filing Date	
13/744,623	01/18/2013	☐ To be Mailed

ENTITY: ☒ LARGE ☐ SMALL ☐ MICRO

APPLICATION AS FILED – PART I

FOR	(Column 1) NUMBER FILED	(Column 2) NUMBER EXTRA	RATE ($)	FEE ($)
☐ BASIC FEE (37 CFR 1.16(a), (b), or (c))	N/A	N/A	N/A	
☐ SEARCH FEE (37 CFR 1.16(k), (i), or (m))	N/A	N/A	N/A	
☐ EXAMINATION FEE (37 CFR 1.16(o), (p), or (q))	N/A	N/A	N/A	
TOTAL CLAIMS (37 CFR 1.16(i))	minus 20 =	*	x $ =	
INDEPENDENT CLAIMS (37 CFR 1.16(h))	minus 3 =	*	x $ =	
☐ APPLICATION SIZE FEE (37 CFR 1.16(s))	If the specification and drawings exceed 100 sheets of paper, the application size fee due is $310 ($155 for small entity) for each additional 50 sheets or fraction thereof. See 35 U.S.C. 41(a)(1)(G) and 37 CFR 1.16(s).			
☐ MULTIPLE DEPENDENT CLAIM PRESENT (37 CFR 1.16(j))				
* If the difference in column 1 is less than zero, enter "0" in column 2.			TOTAL	

APPLICATION AS AMENDED – PART II

AMENDMENT

04/06/2016	(Column 1) CLAIMS REMAINING AFTER AMENDMENT		(Column 2) HIGHEST NUMBER PREVIOUSLY PAID FOR	(Column 3) PRESENT EXTRA	RATE ($)	ADDITIONAL FEE ($)
Total (37 CFR 1.16(i))	* 6	Minus	** 20	= 0	x $80 =	0
Independent (37 CFR 1.16(h))	* 1	Minus	***3	= 0	x $420 =	0
☐ Application Size Fee (37 CFR 1.16(s))						
☐ FIRST PRESENTATION OF MULTIPLE DEPENDENT CLAIM (37 CFR 1.16(j))						
					TOTAL ADD'L FEE	0

AMENDMENT

	(Column 1) CLAIMS REMAINING AFTER AMENDMENT		(Column 2) HIGHEST NUMBER PREVIOUSLY PAID FOR	(Column 3) PRESENT EXTRA	RATE ($)	ADDITIONAL FEE ($)
Total (37 CFR 1.16(i))	*	Minus	**	=	x $ =	
Independent (37 CFR 1.16(h))	*	Minus	***	=	x $ =	
☐ Application Size Fee (37 CFR 1.16(s))						
☐ FIRST PRESENTATION OF MULTIPLE DEPENDENT CLAIM (37 CFR 1.16(j))						
					TOTAL ADD'L FEE	

* If the entry in column 1 is less than the entry in column 2, write "0" in column 3.
** If the "Highest Number Previously Paid For" IN THIS SPACE is less than 20, enter "20".
*** If the "Highest Number Previously Paid For" IN THIS SPACE is less than 3, enter "3".
The "Highest Number Previously Paid For" (Total or Independent) is the highest number found in the appropriate box in column 1.

LIE
/FLORENCE PATTERSON/

This collection of information is required by 37 CFR 1.16. The information is required to obtain or retain a benefit by the public which is to file (and by the USPTO to process) an application. Confidentiality is governed by 35 U.S.C. 122 and 37 CFR 1.14. This collection is estimated to take 12 minutes to complete, including gathering, preparing, and submitting the completed application form to the USPTO. Time will vary depending upon the individual case. Any comments on the amount of time you require to complete this form and/or suggestions for reducing this burden, should be sent to the Chief Information Officer, U.S. Patent and Trademark Office, U.S. Department of Commerce, P.O. Box 1450, Alexandria, VA 22313-1450. DO NOT SEND FEES OR COMPLETED FORMS TO THIS ADDRESS. **SEND TO: Commissioner for Patents, P.O. Box 1450, Alexandria, VA 22313-1450.**
If you need assistance in completing the form, call 1-800-PTO-9199 and select option 2.

UNITED STATES PATENT AND TRADEMARK OFFICE

UNITED STATES DEPARTMENT OF COMMERCE
United States Patent and Trademark Office
Address: COMMISSIONER FOR PATENTS
P.O. Box 1450
Alexandria, Virginia 22313-1450
www.uspto.gov

APPLICATION NO.	FILING DATE	FIRST NAMED INVENTOR	ATTORNEY DOCKET NO.	CONFIRMATION NO.
13/744,623	01/18/2013	Marc KRÜGER	26571-0030-C1	8894

26587 7590 04/26/2016
MCNEES WALLACE & NURICK LLC
100 PINE STREET
P.O. BOX 1166
HARRISBURG, PA 17108-1166

EXAMINER
BECKER, DREW E

ART UNIT	PAPER NUMBER
1792	

MAIL DATE	DELIVERY MODE
04/26/2016	PAPER

Please find below and/or attached an Office communication concerning this application or proceeding.

The time period for reply, if any, is set in the attached communication.

Office Action Summary	Application No. 13/744,623	Applicant(s) KRÜGER, MARC	
	Examiner DREW BECKER	Art Unit 1792	AIA (First Inventor to File) Status No

-- The MAILING DATE of this communication appears on the cover sheet with the correspondence address --

Period for Reply

A SHORTENED STATUTORY PERIOD FOR REPLY IS SET TO EXPIRE 3 MONTHS FROM THE MAILING DATE OF THIS COMMUNICATION.

- Extensions of time may be available under the provisions of 37 CFR 1.136(a). In no event, however, may a reply be timely filed after SIX (6) MONTHS from the mailing date of this communication.
- If NO period for reply is specified above, the maximum statutory period will apply and will expire SIX (6) MONTHS from the mailing date of this communication.
- Failure to reply within the set or extended period for reply will, by statute, cause the application to become ABANDONED (35 U.S.C. § 133). Any reply received by the Office later than three months after the mailing date of this communication, even if timely filed, may reduce any earned patent term adjustment. See 37 CFR 1.704(b).

Status

1)☒ Responsive to communication(s) filed on 4/6/16.

☐ A declaration(s)/affidavit(s) under **37 CFR 1.130(b)** was/were filed on _____.

2a)☒ This action is **FINAL**. 2b)☐ This action is non-final.

3)☐ An election was made by the applicant in response to a restriction requirement set forth during the interview on _____; the restriction requirement and election have been incorporated into this action.

4)☐ Since this application is in condition for allowance except for formal matters, prosecution as to the merits is closed in accordance with the practice under *Ex parte Quayle*, 1935 C.D. 11, 453 O.G. 213.

Disposition of Claims*

5)☒ Claim(s) 19-24 is/are pending in the application.

5a) Of the above claim(s) 24 is/are withdrawn from consideration.

6)☐ Claim(s) _____ is/are allowed.

7)☒ Claim(s) 19-23 is/are rejected.

8)☐ Claim(s) _____ is/are objected to.

9)☐ Claim(s) _____ are subject to restriction and/or election requirement.

* If any claims have been determined allowable, you may be eligible to benefit from the **Patent Prosecution Highway** program at a participating intellectual property office for the corresponding application. For more information, please see http://www.uspto.gov/patents/init_events/pph/index.jsp or send an inquiry to PPHfeedback@uspto.gov.

Application Papers

10)☐ The specification is objected to by the Examiner.

11)☐ The drawing(s) filed on _____ is/are: a)☐ accepted or b)☐ objected to by the Examiner.

Applicant may not request that any objection to the drawing(s) be held in abeyance. See 37 CFR 1.85(a).

Replacement drawing sheet(s) including the correction is required if the drawing(s) is objected to. See 37 CFR 1.121(d).

Priority under 35 U.S.C. § 119

12)☐ Acknowledgment is made of a claim for foreign priority under 35 U.S.C. § 119(a)-(d) or (f).

Certified copies:

a)☐ All b)☐ Some** c)☐ None of the:

1.☐ Certified copies of the priority documents have been received.

2.☐ Certified copies of the priority documents have been received in Application No. _____.

3.☐ Copies of the certified copies of the priority documents have been received in this National Stage application from the International Bureau (PCT Rule 17.2(a)).

** See the attached detailed Office action for a list of the certified copies not received.

Attachment(s)

1) ☐ Notice of References Cited (PTO-892)

2) ☐ Information Disclosure Statement(s) (PTO/SB/08a and/or PTO/SB/08b) Paper No(s)/Mail Date _____.

3) ☐ Interview Summary (PTO-413) Paper No(s)/Mail Date. _____ .

4) ☐ Other: _____.

The present application is being examined under the pre-AIA first to invent provisions.

DETAILED ACTION

Election/Restrictions

1. Claim 24 is withdrawn from consideration as being directed to a non-elected invention. See 37 CFR 1.142(b) and MPEP § 821.03.

Claim Rejections - 35 USC § 112

2. The following is a quotation of the first paragraph of 35 U.S.C. 112(a):

> (a) IN GENERAL.—The specification shall contain a written description of the invention, and of the manner and process of making and using it, in such full, clear, concise, and exact terms as to enable any person skilled in the art to which it pertains, or with which it is most nearly connected, to make and use the same, and shall set forth the best mode contemplated by the inventor or joint inventor of carrying out the invention.

The following is a quotation of the first paragraph of pre-AIA 35 U.S.C. 112:

> The specification shall contain a written description of the invention, and of the manner and process of making and using it, in such full, clear, concise, and exact terms as to enable any person skilled in the art to which it pertains, or with which it is most nearly connected, to make and use the same, and shall set forth the best mode contemplated by the inventor of carrying out his invention.

3. Claims 19-23 are rejected under 35 U.S.C. 112(a) or 35 U.S.C. 112 (pre-AIA), first paragraph, as failing to comply with the written description requirement. The claim(s) contains subject matter which was not described in the specification in such a way as to reasonably convey to one skilled in the relevant art that the inventor or a joint

inventor, or for pre-AIA the inventor(s), at the time the application was filed, had possession of the claimed invention. Claim 19 recites “the diameter of the flange is between 0.85 and 0.89”. The only recitation of “between 0.85 and 0.89” is on page 9 of the specification. However, this recitation is describing a ratio of sizes, rather than actual dimensions.

4. The following is a quotation of 35 U.S.C. 112(b):

> (b) CONCLUSION.—The specification shall conclude with one or more claims particularly pointing out and distinctly claiming the subject matter which the inventor or a joint inventor regards as the invention.

The following is a quotation of 35 U.S.C. 112 (pre-AIA), second paragraph:

> The specification shall conclude with one or more claims particularly pointing out and distinctly claiming the subject matter which the applicant regards as his invention.

5. Claims 19-23 are rejected under 35 U.S.C. 112(b) or 35 U.S.C. 112 (pre-AIA), second paragraph, as being indefinite for failing to particularly point out and distinctly claim the subject matter which the inventor or a joint inventor, or for pre-AIA the applicant regards as the invention.

6. Claim 19 recites “the diameter of the flange is between 0.85 and 0.89”. It is not clear what units are being relied upon here. It is not clear what size is being claimed. The only recitation of “between 0.85 and 0.89” is on page 9 of the specification. However, this recitation is describing a ratio of sizes, rather than actual dimensions. It is not clear if applicant is claiming a dimension or a ratio.

Claim Rejections - 35 USC § 103

7. The following is a quotation of pre-AIA 35 U.S.C. 103(a) which forms the basis for all obviousness rejections set forth in this Office action:

> (a) A patent may not be obtained though the invention is not identically disclosed or described as set forth in section 102 of this title, if the differences between the subject matter sought to be patented and the prior art are such that the subject matter as a whole would have been obvious at the time the invention was made to a person having ordinary skill in the art to which said subject matter pertains. Patentability shall not be negatived by the manner in which the invention was made.

8. Claims 19-23 are rejected under pre-AIA 35 U.S.C. 103(a) as being unpatentable over Sweeney et al [Pat. No. 6,645,537] in view of Erickson et al [Pat. No. 5,243,164].

Sweeney et al teach a beverage filter cartridge comprising a base element with a flange (Figure 2 & 4, #12, 22), a lid/membrane fastened to the base element (Figure 2 & 4, #16; column 4, lines 20-24), a filter element defining a cavity containing beverage raw material (Figure 2 & 4, #14, A, M; column 4, lines 30-34), a gearwheel section formed on a sidewall of the base element (Figure 1 & 5, #20; Figure 7, #20e), the flutes forming the teeth of the gearwheel and having a wave shape (Figure 5, #20), the flange having a sealing surface for the lid (Figure 4, #16, 22), the filter element dividing the cavity into a region for the beverage raw material and a region for the beverage extract (Figure 4, #14, A, B), and the filter element being made form a non-woven material (column 4, lines 15-19). Sweeney et al do not explicitly recite a sidewall diameter of 0.85-0.89 (or ratio).

Erickson et al teach a beverage capsule comprising a base element having a sidewall including a gearwheel section (Figure 1, #12, 14, 30), a filter element which spans the distance across the sidewalls (Figure 1-2, #16, 44), and a diameter of 3.5 inches or 0.89 decimeters (column 7, line 1).

It would have been obvious to one of ordinary skill in the art to incorporate the claimed size into the invention of Sweeney et al, in view of Erickson et al, since both are directed to beverage capsules, since Sweeney et al already included a sidewall but simply did not provide any specific dimensions, since the claimed size was commonly used in the art as shown by Erickson et al (column 7, line 1), and since “a person of ordinary skill has good reason to pursue the known options within his or her technical grasp. If this leads to the anticipated success, it is likely the product not of innovation but of ordinary skill and common sense".

Alternatively, it would have been obvious to one of ordinary skill in the art to incorporate the claimed sidewall diameter to flange diameter ratio into the invention of Sweeney et al since Sweeney et al already included a sidewall and flange (Figure 4, #20, 22) but simply did not provide any specific dimensions or ratios, since the flange diameter of Sweeney et al was clearly larger than the sidewall diameter by a relatively small degree (Figure 4, #20, 22), since the size of the flange and sidewall would have been varied during the course of normal experimentation and optimization procedures due to such factors as the desired serving size, the desired strength of the flange, the size of the beverage making machine which receives the capsule, and desired seal strength of cover, to name but a few.

Furthermore, regarding changes in size and shape MPEP 2144.04 states:

In re Rose, 220 F.2d 459, 105 USPQ 237 (CCPA 1955) (Claims directed to a lumber package "of appreciable size and weight requiring handling by a lift truck" where held unpatentable over prior art lumber packages which could be lifted by hand because limitations relating to the size of the package were not sufficient to patentably

distinguish over the prior art.); *In re Rinehart*, 531 F.2d 1048, 189 USPQ 143 (CCPA 1976) ("mere scaling up of a prior art process capable of being scaled up, if such were the case, would not establish patentability in a claim to an old process so scaled." 531 F.2d at 1053, 189 USPQ at 148.).

In *Gardner v. TEC Syst., Inc.*, 725 F.2d 1338, 220 USPQ 777 (Fed. Cir. 1984), *cert. denied*, 469 U.S. 830, 225 USPQ 232 (1984), the Federal Circuit held that, where the only difference between the prior art and the claims was a recitation of relative dimensions of the claimed device and a device having the claimed relative dimensions would not perform differently than the prior art device, the claimed device was not patentably distinct from the prior art device.

In re Dailey, 357 F.2d 669, 149 USPQ 47 (CCPA 1966) (The court held that the configuration of the claimed disposable plastic nursing container was a matter of choice which a person of ordinary skill in the art would have found obvious absent persuasive evidence that the particular configuration of the claimed container was significant.).

Response to Arguments

9. Applicant's arguments filed 4/6/16 have been fully considered but they are not persuasive.

In response to applicant's argument that the references fail to show certain features of applicant's invention, it is noted that the features upon which applicant relies (i.e., improved turbulence, increased stability, improved extraction, fitting and identifying the capsule to a machine) are not recited in the rejected claim(s). Although the claims are interpreted in light of the specification, limitations from the specification are not read into the claims. See *In re Van Geuns*, 988 F.2d 1181, 26 USPQ2d 1057 (Fed. Cir. 1993).

In response to applicant's argument that the flutes of Sweeney et al were for promoting downward flow, the fact that applicant has recognized another advantage which would flow naturally from following the suggestion of the prior art cannot be the basis for patentability when the differences would otherwise be obvious. See *Ex parte Obiaya*, 227 USPQ 58, 60 (Bd. Pat. App. & Inter. 1985).

In response to applicant's argument that Sweeney et al did not describe using the flutes for fitting the capsule, a recitation of the intended use of the claimed invention must result in a structural difference between the claimed invention and the prior art in order to patentably distinguish the claimed invention from the prior art. If the prior art structure is capable of performing the intended use, then it meets the claim.

Conclusion

10. Applicant's amendment necessitated the new ground(s) of rejection presented in this Office action. Accordingly, **THIS ACTION IS MADE FINAL**. See MPEP § 706.07(a). Applicant is reminded of the extension of time policy as set forth in 37 CFR 1.136(a).

A shortened statutory period for reply to this final action is set to expire THREE MONTHS from the mailing date of this action. In the event a first reply is filed within TWO MONTHS of the mailing date of this final action and the advisory action is not mailed until after the end of the THREE-MONTH shortened statutory period, then the shortened statutory period will expire on the date the advisory action is mailed, and any extension fee pursuant to 37 CFR 1.136(a) will be calculated from the mailing date of

the advisory action. In no event, however, will the statutory period for reply expire later than SIX MONTHS from the date of this final action.

Any inquiry concerning this communication or earlier communications from the examiner should be directed to DREW BECKER whose telephone number is (571)272-1396. The examiner can normally be reached on Mon.-Fri. 9am to 5:30pm.

If attempts to reach the examiner by telephone are unsuccessful, the examiner's supervisor, Erik Kashnikow can be reached on 571-270-3475. The fax phone number for the organization where this application or proceeding is assigned is 571-273-8300.

Information regarding the status of an application may be obtained from the Patent Application Information Retrieval (PAIR) system. Status information for published applications may be obtained from either Private PAIR or Public PAIR. Status information for unpublished applications is available through Private PAIR only. For more information about the PAIR system, see http://pair-direct.uspto.gov. Should you have questions on access to the Private PAIR system, contact the Electronic Business Center (EBC) at 866-217-9197 (toll-free). If you would like assistance from a USPTO Customer Service Representative or access to the automated information system, call 800-786-9199 (IN USA OR CANADA) or 571-272-1000.

/DREW BECKER/
Primary Examiner, Art Unit 1792

Search Notes	Application/Control No.	Applicant(s)/Patent Under Reexamination
	13744623	KRÜGER ET AL.
	Examiner	**Art Unit**
	Drew Becker	1792

CPC- SEARCHED

Symbol	Date	Examiner
B65D 2081/007, 85/8046; A47J 31/3676-31/3695, 31/4492	9/12/14	deb
updated	4/21/16	deb

CPC COMBINATION SETS - SEARCHED

Symbol	Date	Examiner

US CLASSIFICATION SEARCHED

Class	Subclass	Date	Examiner
426	077	5/16/2013	DMP
426	87,77,79,115,594-597,433,383,394	9/12/14	deb
99	295	9/12/14	deb
search	updated	4/21/16	deb

SEARCH NOTES

Search Notes	Date	Examiner
Inventor search.	5/16/2013	DMP
EAST text search.	5/16/2013	DMP
EAST/WEST:coffee,tea,beverage,pod,capsule,cartridge,container,identif,control,monitor,adjust,	9/12/14	deb
updated	4/21/16	deb

INTERFERENCE SEARCH

US Class/ CPC Symbol	US Subclass / CPC Group	Date	Examiner

UNITED STATES PATENT AND TRADEMARK OFFICE

UNITED STATES DEPARTMENT OF COMMERCE
United States Patent and Trademark Office
Address: COMMISSIONER FOR PATENTS
P.O. Box 1450
Alexandria, Virginia 22313-1450
www.uspto.gov

APPLICATION NO.	FILING DATE	FIRST NAMED INVENTOR	ATTORNEY DOCKET NO.	CONFIRMATION NO.
13/744,623	01/18/2013	Marc KRÜGER	26571-0030-C1	8894

26587 7590 10/31/2016
MCNEES WALLACE & NURICK LLC
100 PINE STREET
P.O. BOX 1166
HARRISBURG, PA 17108-1166

EXAMINER
BECKER, DREW E

ART UNIT	PAPER NUMBER
1792	

MAIL DATE	DELIVERY MODE
10/31/2016	PAPER

Please find below and/or attached an Office communication concerning this application or proceeding.

The time period for reply, if any, is set in the attached communication.

PTOL-90A (Rev. 04/07)

Notice of Abandonment	Application No.	Applicant(s)
	13/744,623	KRÜGER, MARC
	Examiner	**Art Unit**
	DREW BECKER	1792

-- The MAILING DATE of this communication appears on the cover sheet with the correspondence address--

This application is abandoned in view of:

1. ☒ Applicant's failure to timely file a proper reply to the Office letter mailed on *26 April 2016*.
   (a) ☐ A reply was received on _____ (with a Certificate of Mailing or Transmission dated _____), which is after the expiration of the period for reply (including a total extension of time of _____ month(s)) which expired on _____.
   (b) ☐ A proposed reply was received on _____, but it does not constitute a proper reply under 37 CFR 1.113 to the final rejection.
   (A proper reply under 37 CFR 1.113 to a final rejection consists only of: (1) a timely filed amendment which places the application in condition for allowance; (2) a timely filed Notice of Appeal (with appeal fee); or (3) if this is utility or plant application, a timely filed Request for Continued Examination (RCE) in compliance with 37 CFR 1.114. Note that RCEs are not permitted in design applications.)
   (c) ☐ A reply was received on _____ but it does not constitute a proper reply, or a bona fide attempt at a proper reply, to the non-final rejection. See 37 CFR 1.85(a) and 1.111. (See explanation in box 7 below).
   (d) ☒ No reply has been received.

2. ☐ Applicant's failure to timely pay the required issue fee and publication fee, if applicable, within the statutory period of three months from the mailing date of the Notice of Allowance (PTOL-85).
   (a) ☐ The issue fee and publication fee, if applicable, was received on _____ (with a Certificate of Mailing or Transmission dated _____), which is after the expiration of the statutory period for payment of the issue fee (and publication fee) set in the Notice of Allowance (PTOL-85).
   (b) ☐ The submitted fee of $_____ is insufficient. A balance of $_____ is due.
   The issue fee required by 37 CFR 1.18 is $_____. The publication fee, if required by 37 CFR 1.18(d), is $_____.
   (c) ☐ The issue fee and publication fee, if applicable, has not been received.

3. ☐ Applicant's failure to timely file corrected drawings as required by, and within the three-month period set in, the Notice of Allowability (PTO-37).
   (a) ☐ Proposed corrected drawings were received on _____ (with a Certificate of Mailing or Transmission dated _____), which is after the expiration of the period for reply.
   (b) ☐ No corrected drawings have been received.

4. ☐ The letter of express abandonment which is signed by the attorney or agent of record or other party authorized under 37 CFR 1.33(b). See 37 CFR 1.138(b).

5. ☐ The letter of express abandonment which is signed by an attorney or agent (acting in a representative capacity under 37 CFR 1.34) upon the filing of a continuing application.

6. ☐ The decision by the Board of Patent Appeals and Interference rendered on _____ and because the period for seeking court review of the decision has expired and there are no allowed claims.

7. ☐ The reason(s) below:

/DREW BECKER/
Primary Examiner, Art Unit 1792

Petitions to revive under 37 CFR 1.137, or requests to withdraw the holding of abandonment under 37 CFR 1.181, should be promptly filed to minimize any negative effects on patent term.