UNITED STATES PATENT AND TRADEMARK OFFICE

BEFORE THE PATENT TRIAL AND APPEAL BOARD

NESPRESSO USA, INC.
Petitioner

v.

K-FEE SYSTEM GMBH
Patent Owner

IPR2024-00304

CORRECTED PETITION FOR INTER PARTES REVIEW OF U.S. PATENT NO. 11,465,830

TABLE OF CONTENTS

Page

I. INTRODUCTION 1

II. TECHNOLOGY BACKGROUND 2

A. Capsule Components and Manufacturing 4

B. Single-Serve Beverage Capsule Identification Systems 8

III. ’830 PATENT 13

A. Overview 13

B. Prosecution History 15

IV. POSITA 16

V. CLAIM CONSTRUCTION 17

VI. GROUNDS 23

VII. PRIOR ART 23

A. Yoakim 23

B. Jarisch 24

C. Rossi 26

D. Rapparini 27

E. Patent Owner’s Foreign Priority Documents Do Not Support the Claims 28

VIII. CLAIMS 1-12 ARE UNPATENTABLE UNDER §103 40

A. Ground 1: Claims 1-2 and 4-7 Would Have Been Obvious Over Yoakim in view of Jarisch and Rossi 40

1. Motivation to Combine Yoakim, Jarisch, and Rossi 40

2. Claims 1/8 46

a) Preamble 47

b) [1.a]/[8.a] 47

c) [1.b]/[8.b] 48

d) [1.c]/[8.c] 48

TABLE OF CONTENTS
(continued)

Page

e) [1.d]/[8.d] 49
f) [1.e]/[8.e] 50
g) [1.f] 51
h) [1.g] 53
i) [1.h]/[8.h] 54
j) [1.i.]/[8.i] 55
k) [1.j]/[8.j] 59
l) [1.k]/[8.k] and [1.l/8.l] 60
m) [1.m]/[8.m] 62
n) [1.n]/[8.n] 62
o) [1.o]/[8.o] and [1.p]/[8.p] 63
p) [1.q]/[8.q] 65
q) [1.r]/[8.r] 67

3. Claim 2 69
4. Claim 4 71
5. Claim 5 71
6. Claim 6 72
7. Claim 7 72

B. Ground 2: Claims 3 and 8-12 Would Have Been Obvious Over Yoakim in view of Jarisch in view of Rossi in Further view of Rapparini 73

1. Motivation to Combine Rapparini 73
2. Claim 3 76
3. Claim 8 78
4. [8.f]/[8.g] 78
5. Claim 9 78

TABLE OF CONTENTS
(continued)

Page

6. Claim 10 78
7. Claim 11 78
8. Claim 12 79

IX. DENIAL UNDER §325(d) IS INAPPROPRIATE 80

X. DENIAL UNDER *NHK/FINTIV* IS ALSO INAPPROPRIATE 85

XI. MANDATORY NOTICES PURSUANT TO 37 C.F.R. §42.8 87

A. Real Parties-In-Interest under 37 C.F.R. §42.8(b)(1). 87
B. Related Matters Under 37 C.F.R. §42.8(b)(2). 87
C. Lead and Back-up Counsel under 37 C.F.R. §42.8(b)(3). 88
D. Service Information under 37 C.F.R. §42.8(b)(4) 88

XII. GROUNDS FOR STANDING 88

XIII. PAYMENT OF FEES 88

XIV. STATEMENT OF PRECISE RELIEF REQUESTED 88

TABLE OF AUTHORITIES

Page(s)

Cases

3Shape A/S and 3Shape Inc., v. Align Tech., Inc.,
IPR2021-01323, Paper 16 (PTAB Jan. 31, 2022) 85

Advanced Bionics, LLC v. MED-EL Elektromedizinische Geräte GmbH,
IPR2019-01469, Paper 6 (PTAB Feb. 13, 2020).....80

Apple v. Koss Corp.,
IPR2021-00381, Paper 15 (PTAB Jul. 2, 2021).....85

Apple, Inc. v. Omni MedSci, Inc.,
IPR2020-00029, Paper 7 (PTAB Apr. 22, 2020) 84, 85

D-Three Enterprises, LLC v. SunModo Corp.,
890 F.3d 1042 (Fed. Cir. 2018) 39

Dish Network L.L.C. v. TQ Delta LLC,
IPR2016-01470, Paper 14 (PTAB Feb. 9, 2017).....17

Flash-Control LLC v. Intel Corp.,
2021 WL 2944592 (Fed. Cir. 2021) 35-36

FWP IP ApS v. Biogen MA, Inc.,
749 Fed.Appx. 969 (Fed. Cir. 2018).....40

Hyatt v. Dudas,
492 F.3d 1365 (Fed. Cir. 2007) 35

Lyft, Inc., v. Rideshare Displays, Inc.,
IPR2021-01602, Paper 7 (PTAB Apr. 11, 2022) 81

Nespresso USA, Inc. v. K-Fee System GmbH,
IPR2022-01574, Paper 12 (PTAB Apr. 14, 2023) 13, 15, 16, 83

Nespresso USA, Inc. v. K-Fee System GmbH,
IPR2023-00485, Paper 9 (PTAB Sept. 13, 2023)..... 13-14, 15, 38, 83

TABLE OF AUTHORITIES
(continued)

Page(s)

Nespresso USA, Inc. v. K-Fee System GmbH,
IPR2023-00502, Paper 9 (PTAB Sept. 13, 2023).....14

Novozymes A/S v. DuPont Nutrition Biosciences APS,
723 F.3d 1336 (Fed. Cir. 2013) 39

PowerOasis, Inc. v. T-Mobile USA, Inc.,
522 F.3d 1299 (Fed. Cir. 2008) 32

Purdue Pharma LP v. Recro Tech. LLC,
694 Fed.Appx. 794 (Fed. Cir. 2017).....40

Studiengesellschaft Kohle MBH v. Shell Oil Co.,
112 F.3d 1561 (Fed. Cir. 1997) 29

Trend Micro Inc. v. Cupp Comput. AS,
IPR2021-00813, Paper 7 (PTAB Oct. 25, 2021).....81

Viken Detection Corp. v. Am. Sci. and Eng. Inc.,
IPR2021-01585, Paper 11 (PTAB May 5, 2022) 85

Vivint, Inc. v. SkyBell Technologies, Inc.,
2022 WL 18587113 (C.D. Cal. Nov. 10, 2022) 86

Statutes

35 U.S.C. §102(e) 23, 24, 27

35 U.S.C. §103.....23, 40, 88

Other Authorities

37 C.F.R. §42.8 87

37 C.F.R. §42.8(b)(1).....87

37 C.F.R. §42.8(b)(2).....87

37 C.F.R. §42.8(b)(3).....88

TABLE OF AUTHORITIES
(continued)

Page(s)

37 C.F.R. §42.8(b)(4) 88

37 C.F.R. §42.15(a) 88

37 C.F.R. §42.103 88

37 C.F.R. §42.104(a) 88

U.S. Patent 11,465,829 ..... 2, 13, 16, 81

U.S. Patent 11,465,830 ..... *passim*

U.S. Patent 11,542,094 ..... 2, 13, 81

U.S. Patent 11,548,722 2

U.S. Patent 11,554,910 2

USPTO Memorandum, Interim Procedure for Discretionary Denials in AIA Post-Grant Proceedings with Parallel District Court Litigation, 8 (June 21, 2022) 86

PETITIONER'S EXHIBIT LIST

No.	Reference	Referred To As
1001	U.S. Patent No. 11,465,830	'830 Patent
1002	Prosecution History of U.S. Patent No. 11,465,830	'830 Patent File History
1003	Declaration of Michael Jobin	Jobin Decl.
1004	U.S. Patent Pub. US2010/0239734A1	Yoakim
1005	U.S. Patent Pub. US2013/0064937A1	Jarisch
1006	U.S. Patent Pub. US2013/0064929A1	Jarisch 929
1007	PCT Pub. WO2010/026053A1	Denisart
1008	U.S. Patent Pub. US2012/0269933A1	Rapparini
1009	U.S. Patent Pub. 2008/0105131	Castellani
1010	PCT Pub. WO2005/079638A1	Panesar
1011	U.S. Patent Pub. 2006/0233921	Mock
1012	National Coffee Association	NCA
1013	U.S. Patent Pub. 2002/0078831	Cai
1014	U.S. Patent No. 726,793	Bezzera
1015	U.S. Patent Pub. 2009/0007793	Glucksman
1016	U.S. Patent No. 3,387,553	Tavera
1017	U.S. Patent No. 3,631,793	Bednartz
1018	U.S. Patent No. 4,136,202	Favre
1019	U.S. Patent No. 6,142,063	Beaulieu
1020	U.S. Patent No. 4,389,925	Piana

1021	U.S. Patent No. 6,655,260	Lazaris
1022	U.S. Patent Pub. 2006/0230941	Ryser
1023	U.S. Patent Pub. 2009/0249961	Cheng
1024	U.S. Patent Pub. 2004/0089158	Mahlich
1025	PCT Pub. WO 2010/034663	Ozanne
1026	ASM Handbook, Volume 14B: Metalworking: Sheet Forming, S.L. Semiatin, editor.	ASM Handbook
1027	https://www.italcoat.com/wp-content/uploads/2022/08/ITC-Coffee-Capusles.pdf	Italcoat
1028	EU Patent App. EP2145759A1	Geerts
1029	Penix J.A. (1991) Thermoforming of Plastic Film and Sheet. In: Berins M.L. (eds) SPI Plastics Engineering Handbook of the Society of the Plastics Industry, Inc.	Penix
1030	U.S. Patent No. 3,437,253	Davis
1031	U.S. Patent No. 5,261,558	Claydon
1032	U.S. Patent No. 5,243,164	Erickson
1033	U.S. Patent No. 6,645,537	Sweeney
1034	EU Patent App. EP1849718A1	Rubino
1035	PCT Pub. WO2010/041179A2	Mariller
1036	EU Patent App. EP0455337B1	Bentley
1037	U.S. Patent Pub. 2002/0048621A1	Boyd
1038	U.S. Patent Pub. 2007/0203587A1	Erlandsson

1039	U.S. Patent Pub. 2005/0150391A1	Schifferle
1040	PCT Pub. WO2005/044067A1	Ruchonnet
1041	PCT Pub. WO2010/099806A1	Rossi
1042	US Patent Pub. 2009/0205747	Lillard
1043	U.S. Patent Pub. 2010/0078480A1	Aker
1044	U.S. Patent Pub. 2013/0099597	Perentes
1045	Official English translation of German application No. 102011010534.4	February 2011 Application
1046	Official English translation German application No. 102010031988.0	July 2010 Application
1047	Nespresso USA, Inc. v. K-fee System GmbH, Case No. 2:22-cv-09295; Dkt. 13.	First Amended Complaint
1048	Nespresso USA, Inc. v. K-fee System GmbH, Case No. 2:22-cv-09295 – Infringement Contentions (August 20, 2023)	Infringement Contentions
1049	*Nespresso USA, Inc. v. K-fee System GmbH*, Case No. 2:22-cv-09295 – Infringement Contentions (August 20, 2023)	Infringement Contentions
1050	Excerpt from Prosecution History of U.S. Appl. No. 13/744,623	’623 Appl.
1051	https://nestle-nespresso.com/our_products/product	Nespresso Vertuo System
1052	*K-Fee System GmbH v. Nespresso USA, Inc. et al.*, Case No. 2:21-cv-3402; Dkt. 111.	Claim Construction Order

1053	Excerpt from Prosecution History of U.S. Appl. No. 16/438,818	’818 Appl.
1054	*K-Fee System GmbH v. Nespresso USA, Inc. et al.*, Case No. 2:21-cv-3402; Dkt. 211.	Summary Judgment Order
1055	Food Packaging and Shelf Life: A Practical Guide (2009), Chapter 11 – “Packaging and the Shelf Life of Coffee”	Food Packaging
1056	Illy, Andrea, and Rinantonio Viani, eds. *Espresso coffee: the science of quality*. Academic Press, 2005.	Espresso Coffee
1057	United States District Courts – National Judicial Caseload Profile (Central District of California), *available at* https://www.uscourts.gov/sites/default/files/data_tables/fcms_na_distprofile0630.2020.pdf	Central District of California Time to Trial Statistics
1058	Docket Navigator Time to Trial (Judge George H. Wu; Central District of California), *available at* https://search.docketnavigator.com/patent/binder/0/0?profileType=time_to_trial&profileId=0	Docket Navigator Time to Trial Statistics
1059	Lateral, Concise Oxford English Dictionary (11th ed. Revised 2008).	Oxford Dictionary
1060	Lateral, Merriam-Webster’s Collegiate Dictionary (11th ed. 2004).	Merriam-Webster Dictionary
1061	Lateral, Random House Webster’s unabridged dictionary (2d. 2001).	Random House Dictionary
1062	Excerpt from Appl. No. 16/680,441: Jul. 13, 2020 Office Action Rejection	’441 Appl. First Rejection

1063	Excerpt from Appl. No. 16/860,441: Oct. 13, 2020 Response to Office Action	’441 Appl. Response
1064	Excerpt from Appl. No. 16/538,752: Nov. 8, 2019 Office Action Rejection	752 Appl. First Rejection
1065	Excerpt from Appl. No. 16/538,752: Jan. 23, 2020 Response to Office Action	752 Appl. First Response
1066	Excerpt from Appl. No. 16/538,752: Jul. 27, 2020 Response to Office Action	752 Appl. Second Response

I. INTRODUCTION

Petitioner requests *inter partes* review and cancellation of claims 1-12 of U.S. Patent 11,465,830 ("the '830 Patent") (EX1001) because the claims recite nothing more than well-known coffee system features combined in ways that would have been obvious to a person of ordinary skill in the art (POSITA).

In 2013, K-fee System GmbH ("K-fee") began filing claims in the U.S. directed to portion capsules with "identifiers" such as gearwheels and machine-readable imprints inside the capsule membrane. EX1050, 29, 173. These claims were rejected by the USPTO, and abandoned by K-fee. *Id.*, 239-250. At that time, K-fee's applications had nothing to do with Nespresso's coffee systems. But in 2014, Nespresso launched the Vertuo System. EX1051. Years later, K-fee began filing continuation applications attempting to reverse-engineer patent coverage over Nespresso's machine and capsule. As a result, K-fee's new claims are untethered from its original priority filings and unpatentable in view of the prior art, including Nespresso's own patent publications.

To distract from the fact that its claim limitations are all found in the prior art, K-fee filed Information Disclosure Statements ("IDSs") with hundreds of prior art references—even those with little relevance. As a result, numerous patents issued that would never have issued had the Examiners utilized the Yoakim reference and its combination with the references cited.

K-fee has filed continuation after continuation in an effort to fuel lawsuits against Nespresso. However, the resulting claims repeat the same limitations, and have already received IPR institutions: IPR2022-01574, IPR2023-00502, and IPR2023-00485. In fact, the '830 Patent terminally disclaimed U.S. 11,465,829, which terminally disclaimed U.S. 11,542,094, which terminally disclaimed the patent being reviewed in IPR20222-01574, and is highly similar to all three.

As shown in this Petition and the concurrently filed petitions on U.S. Patents 11,465,829, 11,542,094, 11,554,910, and 11,548,722, K-fee has continued its gamesmanship of seeking patents on anything it can in an attempt to cover Nespresso's products without being held to the limited disclosures of its priority applications. As with the three currently instituted IPRs, K-fee has not fixed its priority and patentability problems, and these patents should never have issued.

Accordingly, such claims are unpatentable over the prior art as presented in Grounds 1-2.

II. TECHNOLOGY BACKGROUND

Coffee extraction has been known for centuries (EX1003, ¶¶53-54), and single-portion coffee offerings began to emerge in the 1960s. *Id.* ¶¶55-56. Single-serve beverage systems by Keurig, Nespresso, and others were widely available by 2010. *Id*. ¶57. The operation and components of these systems are well-known. *Id.* They include a brewing chamber to place the single-serve capsule, and needles to

pierce the capsule to allow for water injection using a water pump and heater, which extracts beverage into a cup for drinking. *Id.* ¶¶58-59.

An example from 1979 is shown (right) using an aluminum capsule (10) including a bottom portion that is pierced by a needle (12) to inject high-pressure hot water, which exits through membrane (8) that perforates under pressure. EX1018, 2:17-31, FIG2; EX1003, ¶60. By 2000, such systems were computer controlled to manipulate sensors, valves, and water pumps to optimize the brewing process. EX1019, 2:21-3:11, FIG1, FIG4A; EX1003, ¶¶61-63.

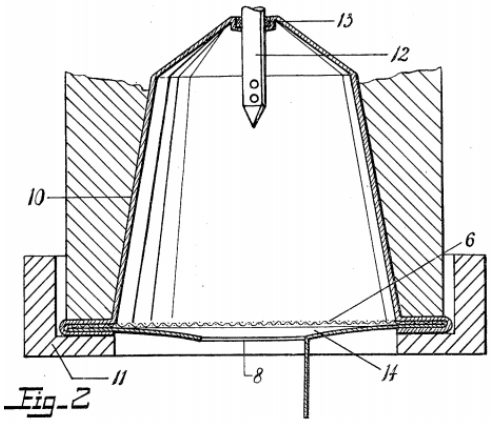

Single-serve capsules must be removed after brewing to allow use of a subsequent capsule. Used-capsule containers, such as the drawer (32) (right), have long been utilized to avoid touching hot, wet capsules after brewing. EX1003, ¶¶64-65; EX1020, 3:4-10, FIG3.

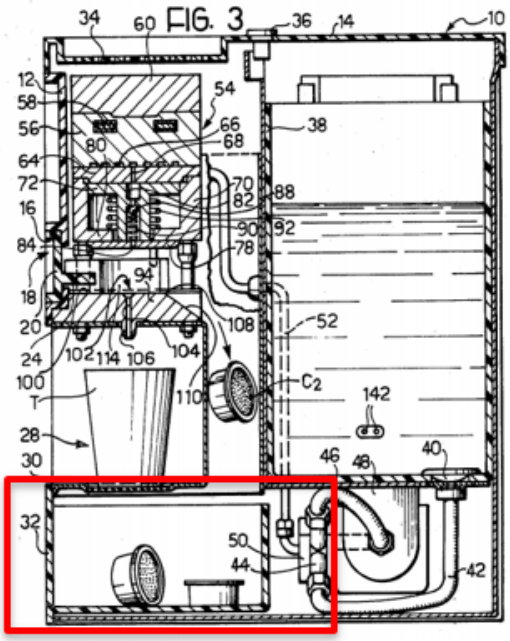

Likewise, machine features, such as that shown in blue (right), have long been known to position capsules (10) and automatically eject into waste containers. EX1003, ¶¶66-71; EX1009, [0053]-[0054], FIG7; EX1020, 5:15-31; EX1021, 3:6-8, 24-31, 47-56, 4:39-43; EX1022, [0049]-[0051], FIG8; EX1023, [0042]-[0047], [0008]-[0015], FIG7.

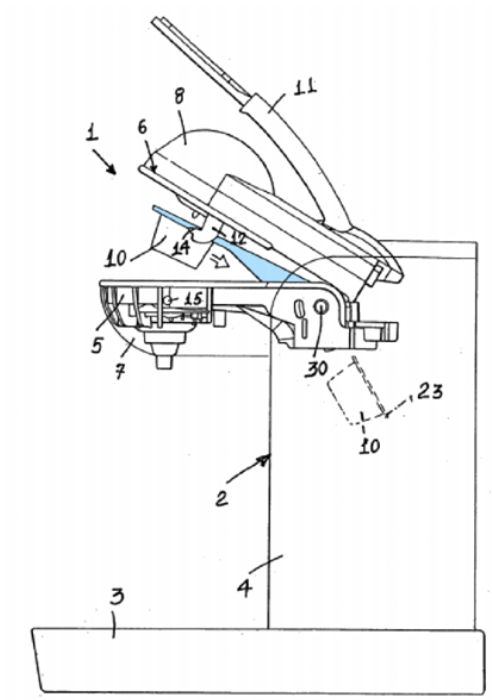

FIG. 7

A. Capsule Components and Manufacturing

Capsule design evolved to allow for different beverage sizes, and to withstand water pressure and temperature, with good barrier properties to protect coffee from moisture and oxygen. EX1003, ¶¶72-74; EX1018, 1:5-12; EX1015, [0014]-[0015]. Aluminum, manufactured by deep-drawing[1], has long been a common capsule material because of its exceptional barrier properties. EX1003, ¶¶75-76; EX1024, [0005]; EX1025, 1:7-23; EX1044, [0044]-[0045].

POSITAs also knew to use barrier layers in coffee packaging to increase

[1] Deep-drawing involves shaping sheets of aluminum with a die. EX1003, ¶¶77-79; EX1026, 323; EX1027; EX1028, [0004]. Thermoforming can be used for plastic. EX1003, ¶¶80-82; EX1029, 383-426.

freshness and prevent moisture or aroma from escaping. EX1003, ¶83; EX1055, 205; EX1056, 246. To extend shelf life, it was also known to package coffee using inert gasses, such as nitrogen, and to pressurize the contents. EX1003, ¶84; EX1056, 248; EX1055, 208; EX1024, [0005]. Internal pressure also can occur if the coffee outgasses CO2 over time. EX1003, ¶85; EX1056, 249-250. It is known that the capsule's foil membrane will bow outwardly when the pressure inside the container is higher than atmospheric pressure. EX1003, ¶¶85-86.

Because single-serve capsules endure physical stresses during brewing and handling, it also became common to use grooves, ribs or other indentations to stiffen the capsule wall. EX1003, ¶¶87-89; EX1030, 1:14-21; EX1031, 1:27-37; EX1032, 5:10-25. In other instances, capsule indentations have been used for purely ornamental purposes. EX1003, ¶87. The pervasiveness of such structures is shown below. EX1003, ¶¶90-94.

Date	Capsule	Description
2001	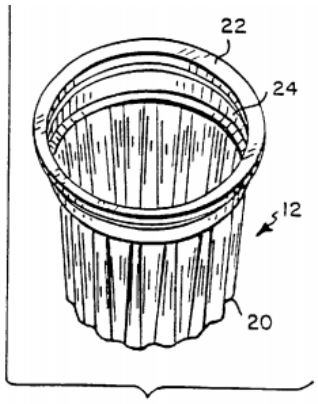 FIG. 2 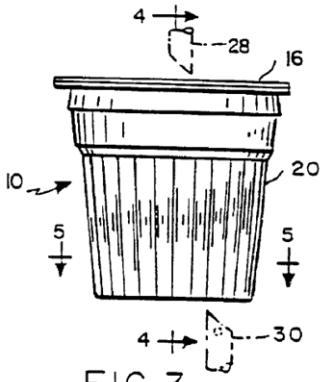 FIG. 3	"circumferentially spaced flutes which are strategically positioned to ***enhance resistance to buckling***" EX1033, 2:20-25.[2]
2006	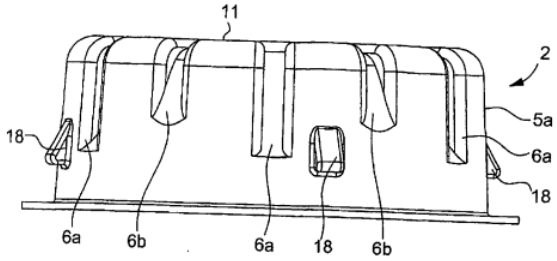 Fig.2	"A first series of ribs 6a plays a part in ***reinforcing the capsule*** 2." EX1011, [0077].

[2] All emphasis in this Petition is added.

Date	Capsule	Description
2007	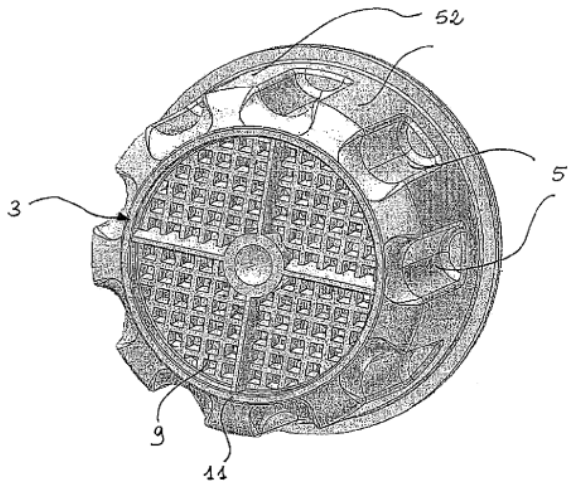 FIG. 2	Indentations on the capsule wall and cavity. EX1034, [0009].
2010	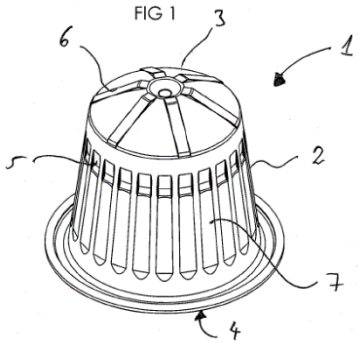	The grooves (7) are "side wall ***stiffening elements***." EX1035, [0027], [0037].
2010	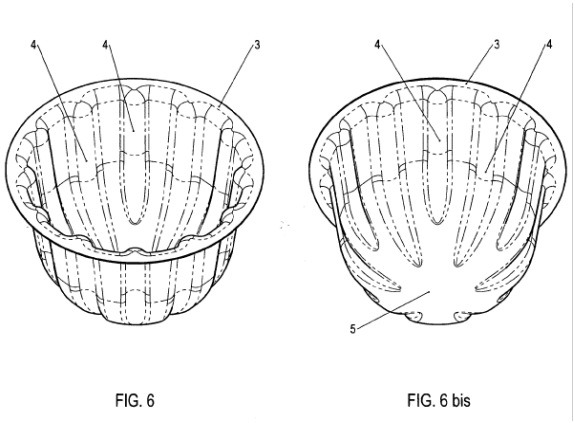	The capsule body has "longitudinal ***stiffening ribs***" that "allow[] the ***optimization of the stability*** of the container." EX1008, [0009].

B. Single-Serve Beverage Capsule Identification Systems

An increase in the number of single-serve capsules and brewing systems led to the development of capsule identification methods used to control the brewing process based on the type of capsule, or otherwise determine whether a particular capsule was suitable or safe for a given machine. EX1003, ¶96; EX1015, [0009], [0014]-[0015]. Since the early 1990s, it was known to use optical readers to read an identifier, such as a barcode, off the capsule surface and adjust brewing parameters according to the identifier. EX1003, ¶¶97-98; EX1036, 4:40-45, 5:1-50, 7:47-8:22. By 2010, using optical codes for capsule identification and machine control was highly developed, as shown below. *Id.* ¶¶99-110.

Date	Capsule/System	Description
2002	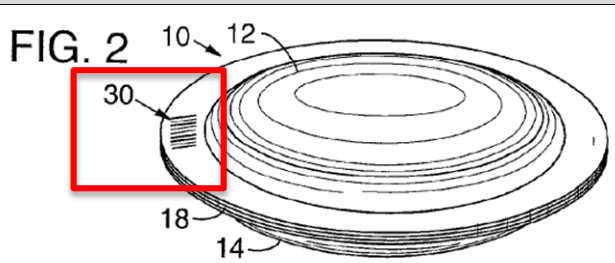 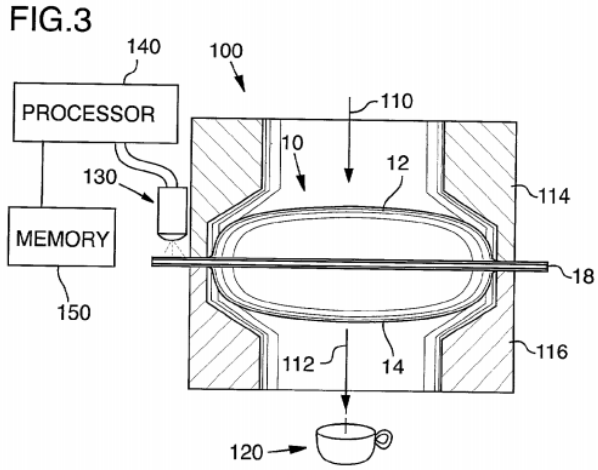	Barcode used to identify the capsule, compare with system memory, and determine "the source of the packet ***so as to prohibit use of counterfeit products***, or packets from unauthorized suppliers." EX1037, [0037]; *see also* [0002], [0005], [0006], [0023]. [0028], [0032], [0033].

Date	Capsule/System	Description
2004	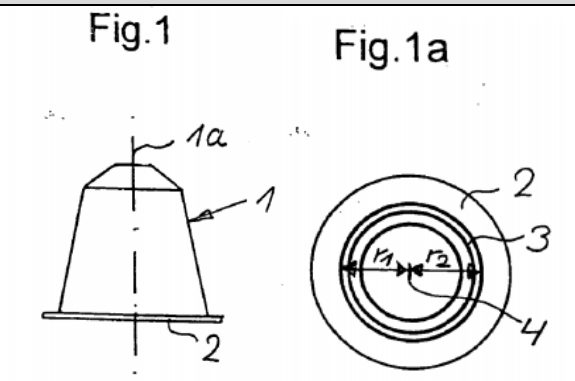	Machine identifies capsule based on barcode and ***blocks operation*** if it does not match pre-programmed identifier. EX1024, [0014].
2005	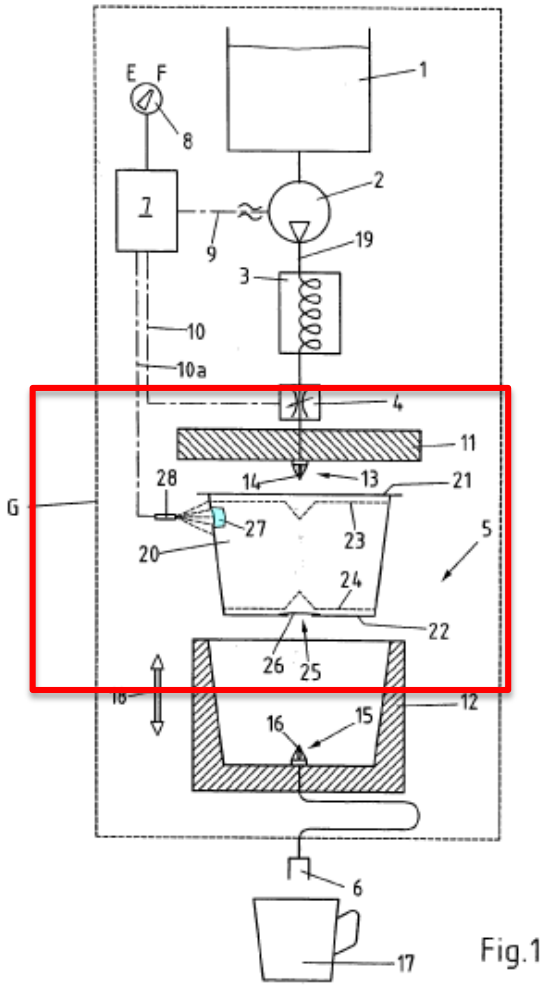	Coffee identification system with barcode positioned on the capsule ***so the system can control extraction parameters, including the water pump***. EX1039, [0019].

Date	Capsule/System	Description
2005	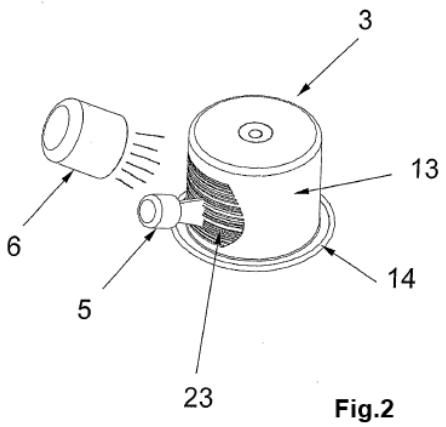 Fig.2	System reads capsule barcode to "determine the origin of the containers used," "encrypt/decrypt, analyze, compare, approve/reject and store information read on [the capsule]" and "***selectively start or not start a cycle of operations***." EX1040, 2:3-19.
2007	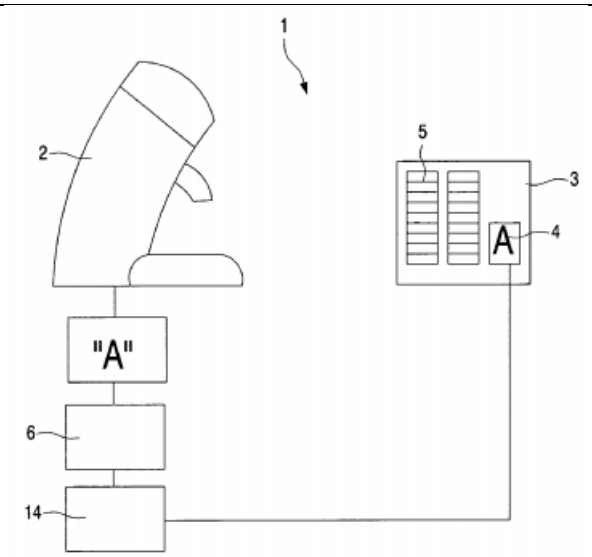 Fig.1	System stores pre-programmed brewing parameters that are selected based on a capsule barcode. EX1038, [0005]-[0006], [0011]-[0012], [0025]-[0028].

Date	Capsule/System	Description
2009	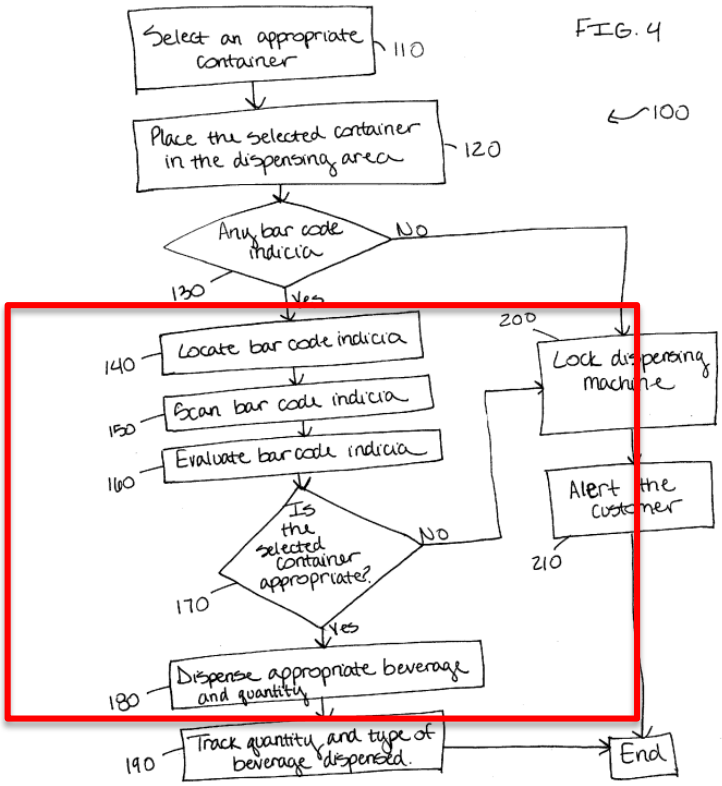	System checks coffee barcode and either ***locks machine*** or brews beverage ***based on barcode result***. EX1042, [0054]-[0055].
2010	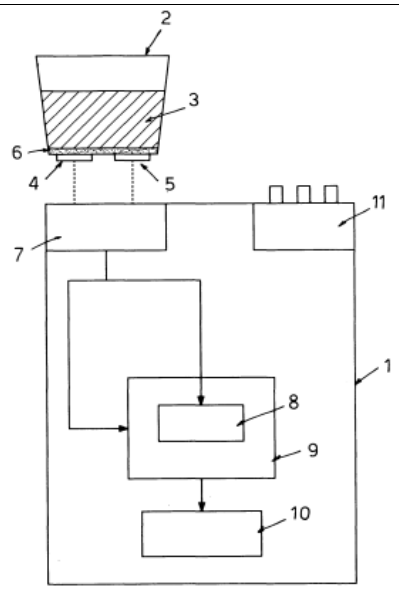 FIG.1	System reads barcodes on the capsule and "compares the signal from the recognising means for the [barcodes] with pre-stored data in order to allow the machine to ***proceed to activation only if it recognises the [barcodes]***." EX1041, 11.

POSITAs also understood how to position optical identifiers on capsules to

ensure proper alignment with the reader and avoid obstruction of the code during reading. *Id*. ¶¶111-112.

POSITAs knew that repeating an optical identifier around the perimeter of the rim could increase the chances that the reader would successfully read the code. In 2002, Boyd disclosed using an identifier that "***may span its entire perimeter in . . . repetitive fashion***." EX1003, ¶114; EX1037, [0029]. In 2008, Aker disclosed a capsule identifier "repetitively positioned" on the perimeter of the rim (below). EX1003, ¶113; EX1043, [0017], [0006].

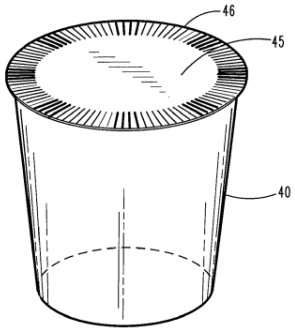

FIG. 2A

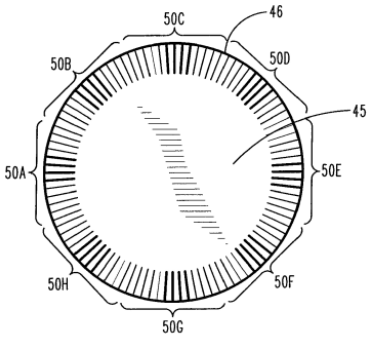

FIG. 2B

Aker identified the benefit to repetition because an optical reader "can read the information coded . . . even if the orientation of the product body is not fixed." EX1043, [0022]. Jarisch 929 also disclosed repeating an optical code on the bottom of the capsule flange, "in order to ensure reliable reading" because "the same sequence can be detected or read more than one time" during capsule rotation. EX1003; ¶115; EX1006, [0068].

POSITAs further understood that positioning an optical identifier away from

the liquid inlet and outlet would increase readability of the code by shielding it from liquid and loose coffee grinds. EX1003, ¶116. For example, Panesar disclosed the benefits of positioning the barcode away from the liquid injection areas to avoid soiling or tearing the barcode. EX1003, ¶117; EX1010, 2:29-3:12, 19:22-20:13.

It was also known that positioning the code on the underside of the rim provided the advantage of increasing the readability of the code in the system. For example, Jarisch and Jarisch 929 disclosed a capsule with an optical code located on the underside of the flange—away from the membrane and injection site—to avoid soiling during the extraction process and thus improve the reliability of code reading. EX1003, ¶¶118-120; EX1005, [0014], [0022]; EX1006, [0017]-[0018].

Thus, repeating an optical identifier around the bottom perimeter of the capsule flange was known at the time of the alleged invention. EX1003, ¶121.

III. ’830 PATENT

A. Overview

The ’830 Patent is related to, and possesses highly-similar disclosure as the ’491, ’430, and ’923 Patents, which the Board characterized in its Institution Decisions.[3] IPR2022-01574, Paper 12, 3-5 (PTAB Apr. 14, 2023); IPR2023-00485,

[3] The’830 Patent terminally disclaims the ’829 Patent which terminally disclaims the ’094 Patent which terminally disclaims the ’491 Patent—currently

Paper 9, 3-6 (Sept. 13, 2023); IPR2023-00502, Paper 9, at 3-6 (PTAB Sept. 13, 2023). Like these patents, the '830 Patent discloses a single-serve beverage system that can identify capsules to determine whether the capsule is suitable for use with the machine, or to adjust brewing parameters. EX1001, 1:29-35; 1:61-2:14; 3:23-30; EX1003, ¶¶122-124. The '830 Patent notes a problem that certain capsules may end up being used in a different manufacturer's brewing system, even though the capsule is not designed for that system. EX1003, ¶123; EX1001, 1:17-22. The disclosed solution is creating a capsule that is only suitable for a specific coffee machine by providing an "identifier" on the capsule that allows a brewing system to identify whether or not a capsule is "suitable for use." EX1003, ¶¶123-124; EX1001, 1:23-25, 1:29-35, 1:61-66.

The capsule comprises a base element with a cavity that contains raw beverage material, *e.g.*, ground coffee, and a lid that seals. EX1001, 1:12-15; 1:29-35; EX1003, ¶122. Grooves reinforce the capsule wall. EX1001, 4:29-32, 12:12-15; 1003, ¶127.

The specification describes sensors/detectors to (i) recognize an "identifier" (*e.g.*, a barcode, recesses and bulges, electrically conductive sections, etc.), and (ii) impact whether and how the machine operates. EX1001, 2:9-14, 2:18-27, 2:48-52,

---

being reviewed in IPR20222-01574. EX1002, 343; EX1003, ¶136.

2:67-3:13, 8:47-49, 8:61-65, 9:19-25; EX1003, ¶¶124-125.

FIG2 discloses a capsule with a barcode (50) placed on the top surface of the capsule rim (17). Although it states that "the barcode 50 alternatively can be attached to the base element's edge region being averted from the membrane 4," it does not provide reason to do so, especially in view of the location of detection (13) shown in FIG2B. EX1001, 8:54-58; EX1003, ¶126.

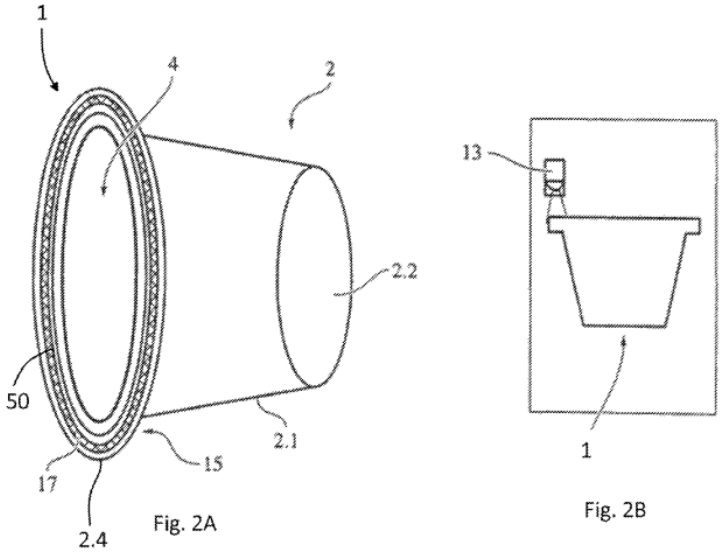

Fig. 2A Fig. 2B

B. Prosecution History

U.S. Patent Application No. 17/670,765 ("'765 application") was filed on February 14, 2022. It claims priority to numerous continuations and divisionals, and to PCT/EP2011/003677, filed on July 22, 2011, which improperly claims priority to three foreign applications (Section VII.E). EX1001; EX1003, ¶¶129-130. The '765 application was originally filed with nine claims directed to a single-serve capsule for making a beverage using a barcode provided on the peripheral region of the basic element which is directed away from the membrane. EX1002, 25; EX1003, ¶¶131-132. Applicant canceled claims 1-9 and added new claims 10-21, which include limitations highly-similar to the '491 and '430 claims. EX1002, 42-45; EX1003,

¶131; IPR2022-01574, Paper 12, 5-6; IPR2023-00485, Paper 9, 5-6.

In the first/only Office Action, the Examiner objected to priority and drawings. EX1002, 185-201; EX1003, ¶¶133-35. The only prior art rejections were provisional nonstatutory double patenting rejections over the '829 Patent application. EX1002, 191-201; EX1003, ¶133. In response, and in conjunction with an Examiner interview (EX1002, 339-340), Applicant made minor claim amendments, acknowledged the Examiner's express grant of priority during the interview, and filed a terminal disclaimer. EX1002, 340-359; EX1003, ¶¶135-136.

The Examiner subsequently issued a Notice of Allowance and expressly stated that the priority rejection was removed. EX1002, 373-381; EX1003, ¶¶137-138.

The Examiner issued a Corrected Notice of Allowance after receiving additional IDSs, but did not provide any additional reasons for allowance. EX1002, 524; EX1003, ¶¶139-141. ***Critically, the Examiner never received the Institution Decisions in the '491, '430, and '923 Patent IPRs, which post-date Issuance, and discredit K-fee's priority arguments and credits Petition's reference combinations.***

IV. POSITA

A POSITA, for purposes of this Petition only: a bachelor's degree in engineering plus five years of experience in design of mechanical beverage systems, or similar products, and experience with sensors for recognizing an identifier.

EX1003, ¶40. IPR2022-01574, Paper 12, 15.

V. CLAIM CONSTRUCTION

Petitioner herein applies, for purposes of this Petition, the apparent interpretations that K-fee offered in its infringement contentions (EX1049). *Dish Network L.L.C. v. TQ Delta LLC*, IPR2016-01470, Paper 14, 6-7 (Feb. 9, 2017).

For example, K-fee alleges that the below product in the shape of a continuous dome is a portion capsule that includes a "base element including a wall that is symmetrical about a central longitudinal axis" and "an open end and a closed bottom portion."

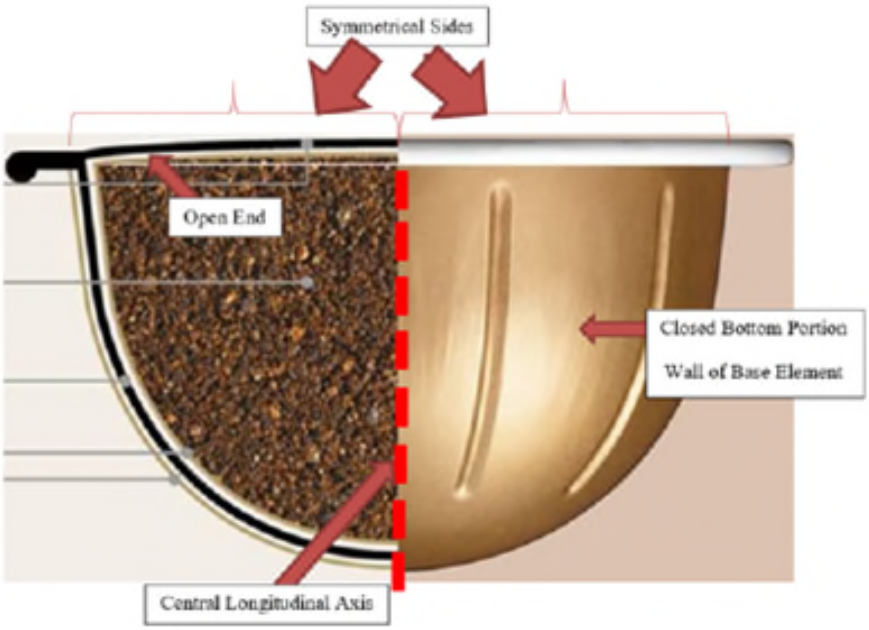

EX1049, 139-142.

For "a plurality of indentations arranged on the outside surface of the wall[,]" "a plurality of vertically-orientated indentations arranged on the outside surface of

the wall[,]" and "a plurality of vertically-orientated ribs arranged on the inside surface of the wall[,]" K-fee accuses:

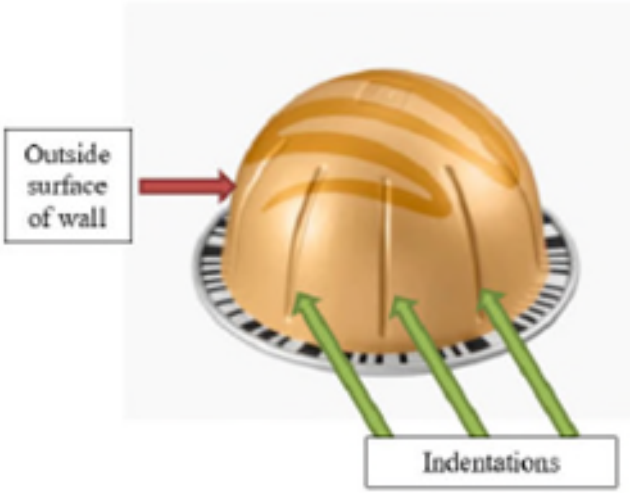

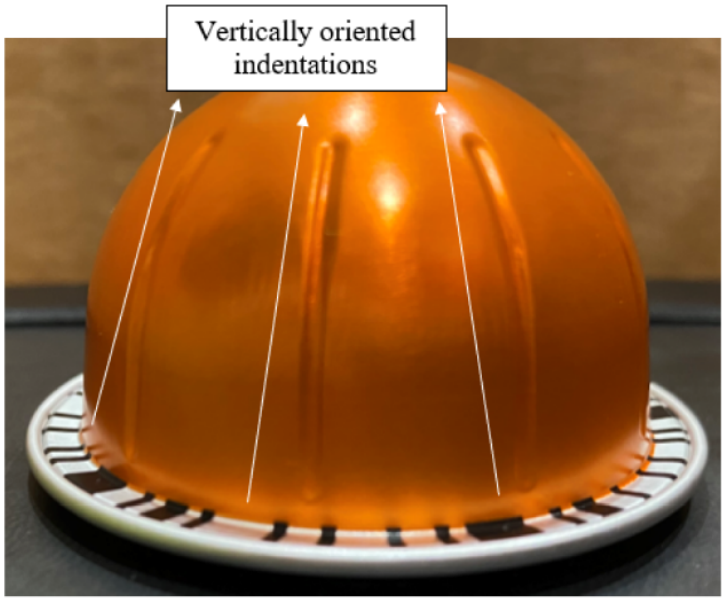

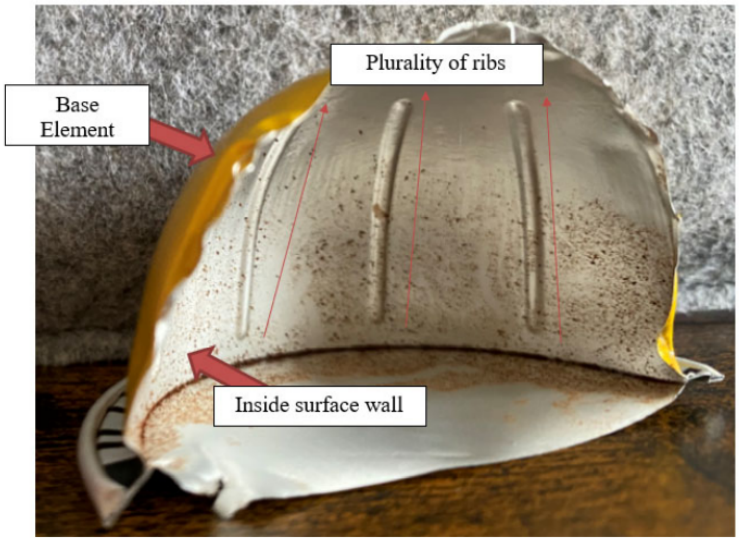

EX1049, 143-144, 184-185.

For "an optically detectable individualization identifier, which is carried by

the bottom surface of the rim[,]" K-fee accuses:

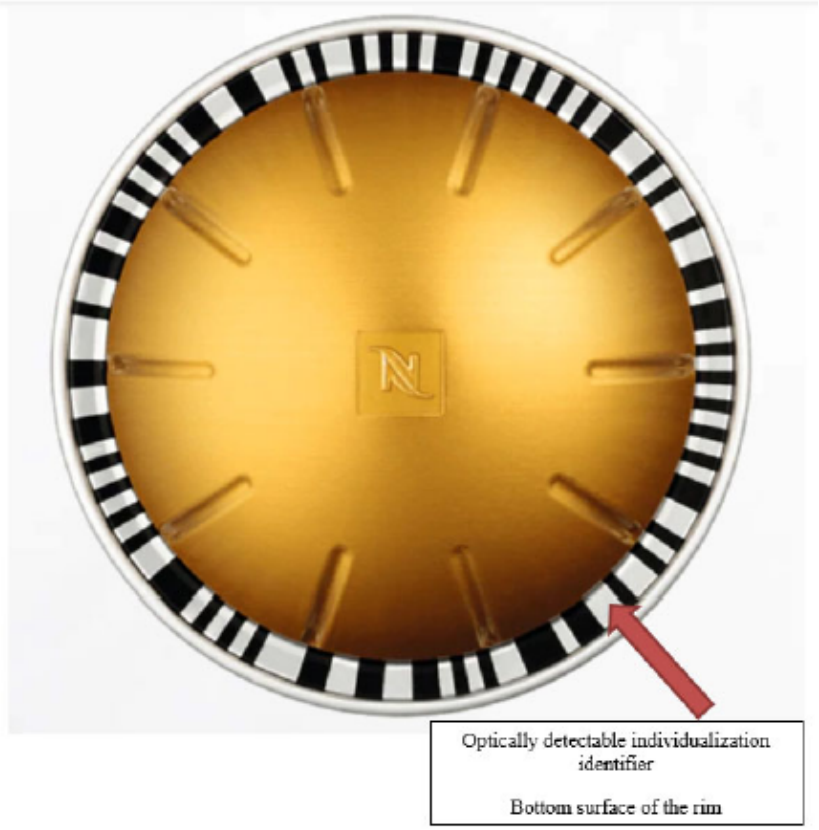

EX1049, 149-150.

For "the wall [of the base element] comprises an electrically conductive section," K-fee accuses:

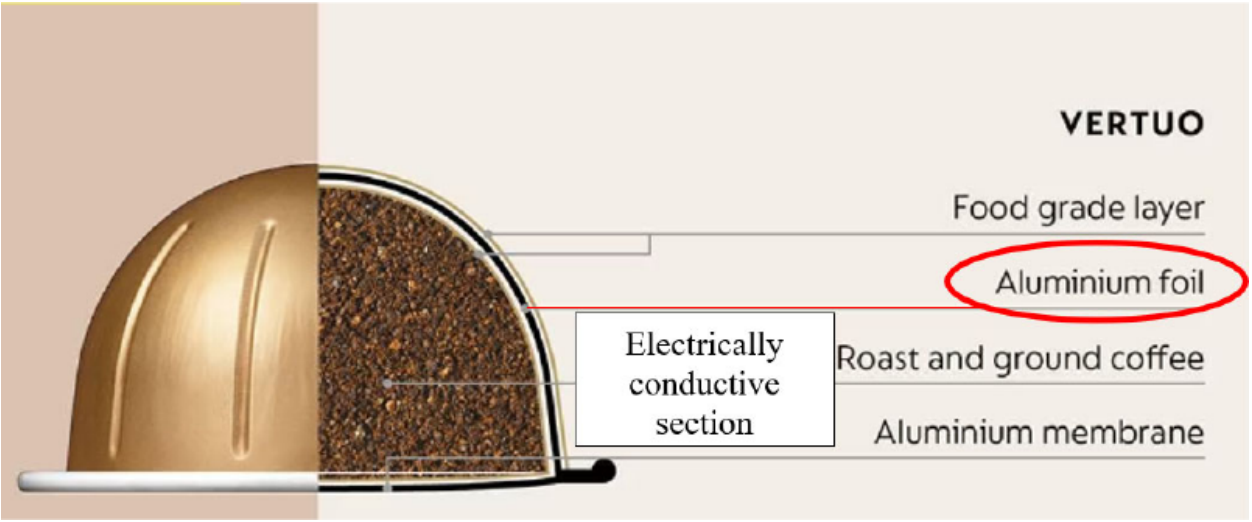

EX1049, 210.

For the limitation "the cover includes a piercing region that is configured to be pierced by a mandrel of the beverage machine at a location that is laterally offset from the central longitudinal axis and a sealing region that is configured to be sealed against by a seal of the beverage machine," K-fee asserts that the limitation includes a brewing system with needles that pierce the outer perimeter of the capsule to allow liquid to exit the capsule.

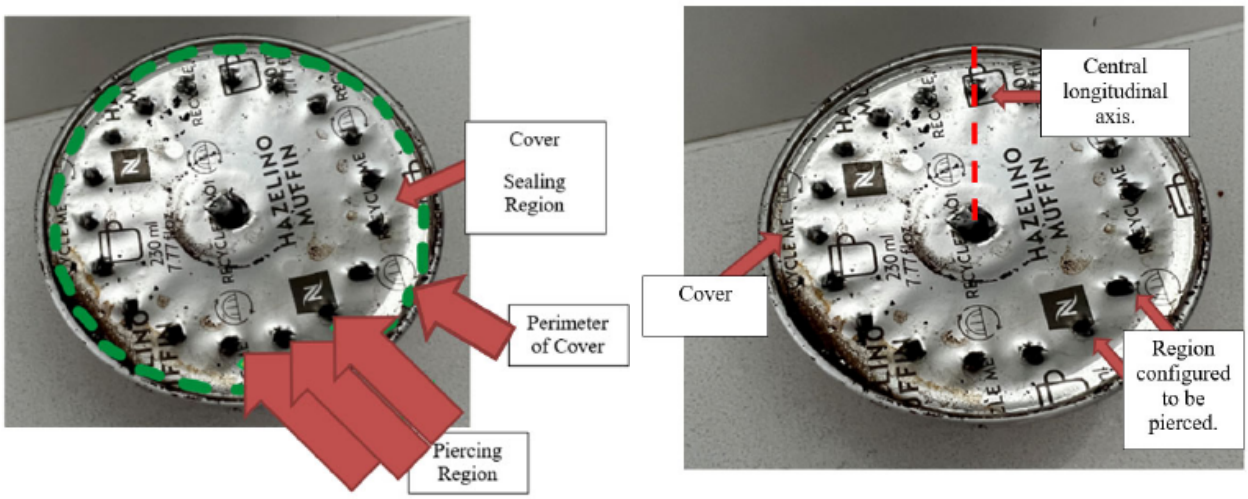

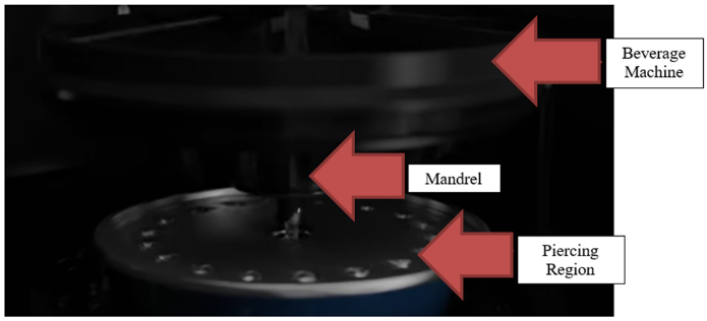

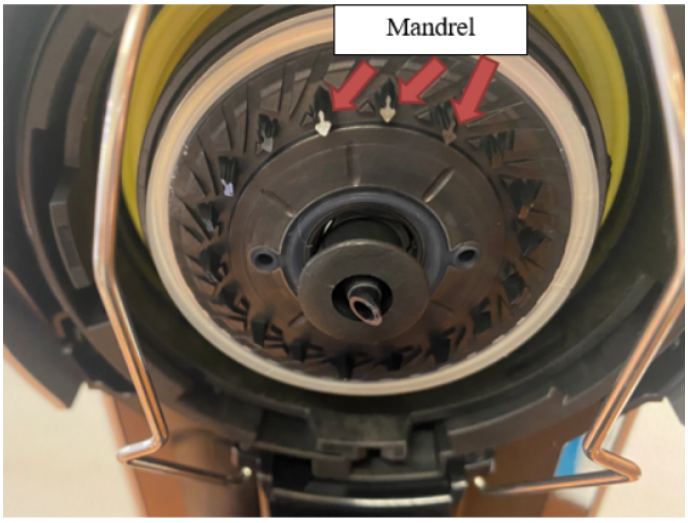

EX1049, 160-164.

For the limitation "a cover attached to the base element to close the cavity, the cover having a central region and a perimeter, the cover is bowed outwardly to a second height in the central region relative to the perimeter of the cover," K-fee accuses:

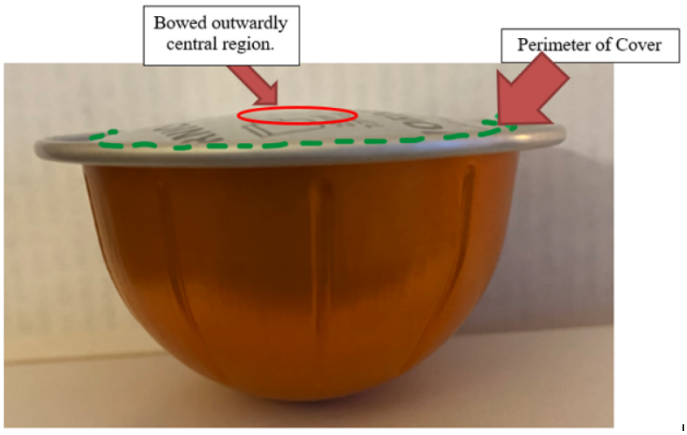

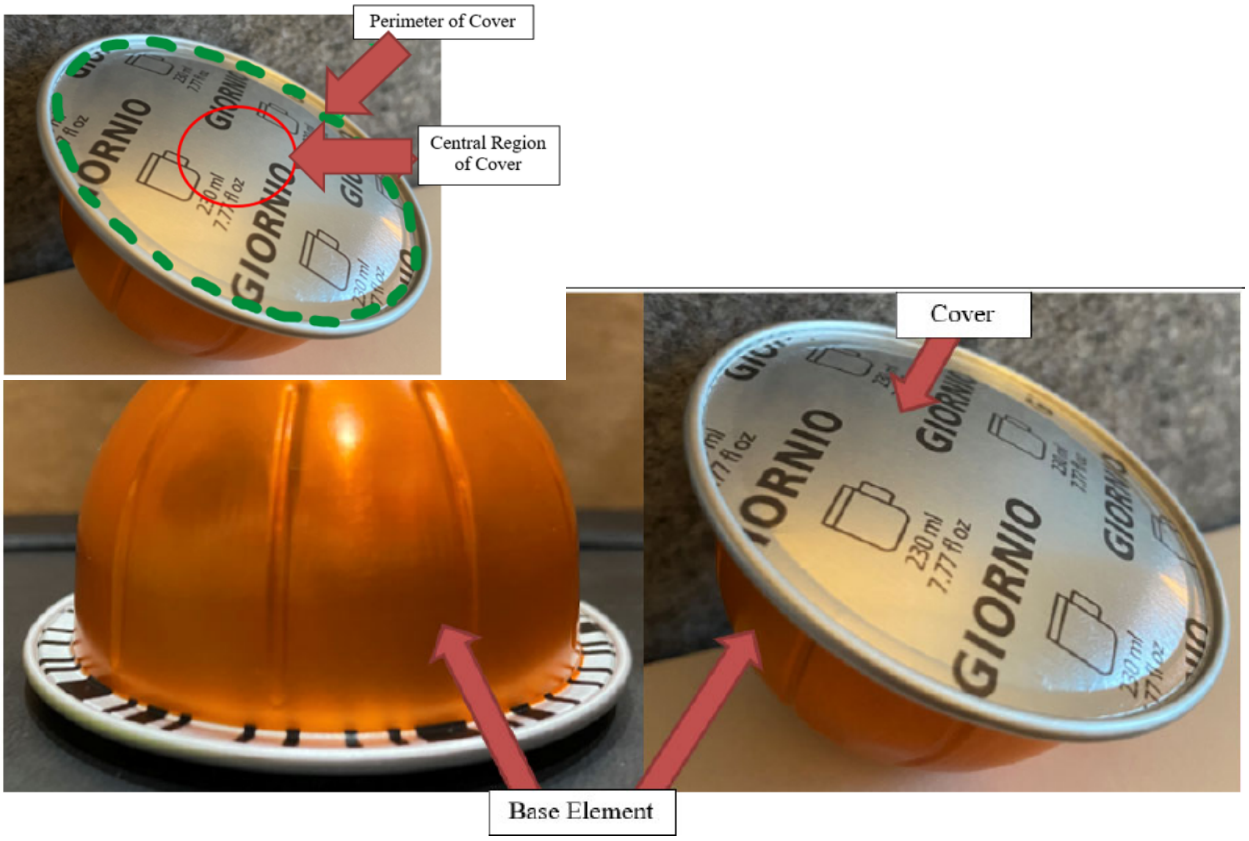

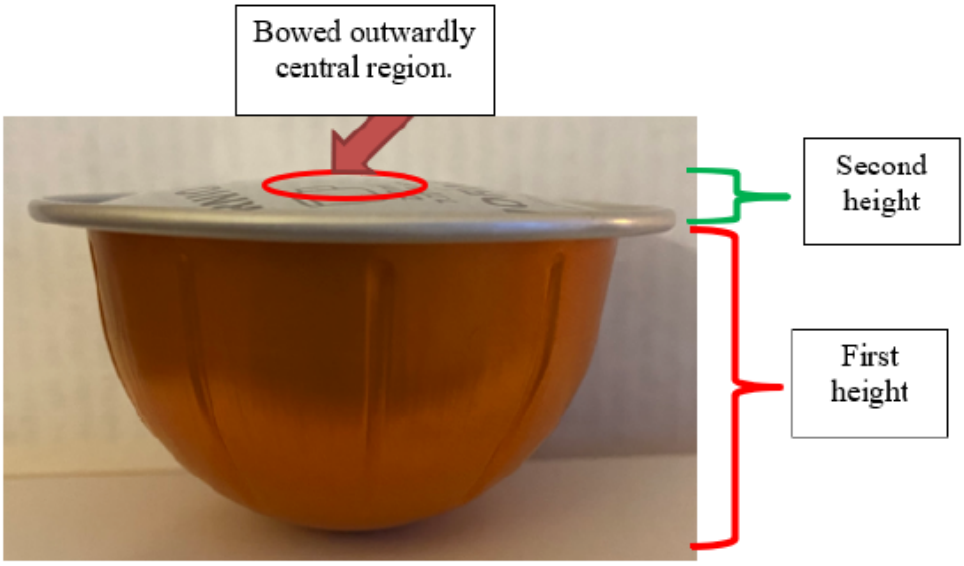

EX1049, 155-59.

In district court, Nespresso proposed that "identifier" be construed as a "feature that individualizes the portion capsule" and "individualize" be construed as

"to determine whether the portion capsule is suitable for use with the beverage machine such that the use of unsuitable capsules is prevented." K-fee proposed "plain and ordinary meaning." As explained below, the prior art discloses and/or renders obvious this limitation under either construction.

Petitioner submits that, for this proceeding, no claim terms require formal construction. EX1003, ¶¶150-153. Prior claim construction of related patents does not impact claim construction here. EX1052.

VI. GROUNDS

Ground	Claims	Basis
1	1-2, 4-7	35 U.S.C. §103 over US2010/0239734 (Yoakim) in view of US2013/0064937 (Jarisch) in view of WO2010/099806 (Rossi).
2	3, 8-12	Ground 1 in further view of US2012/0269933 (Rapparini).

VII. PRIOR ART

A. Yoakim

Yoakim (filed May 7, 2010) is prior art at least under pre-AIA 35 U.S.C. §102(e). EX1003, ¶185. Yoakim discloses a centrifugal beverage system with a single-serve capsule, brewing device, and method for preparing a liquid beverage, *e.g.*, coffee. EX1004, [0014]; EX1003, ¶186. The brewing device includes a water heater, pump, barcode reader, and a control unit. EX1004, [0180], [0182]; EX1003, ¶186. Yoakim's capsule has a flange that is sealed with a membrane lid, and includes a barrier layer that prevents moisture or aroma from escaping. EX1004, [0014],

[0121], [0128]-[0129], [0197], [0414]; EX1003, ¶188. The device pierces the membrane with needles, allowing for capsule rotation, injection of water, and a path for coffee to exit the capsule. EX1004, [0186]; EX1003, ¶187.

Yoakim's invention improves control of brewing parameters to provide a high-quality, customized beverage brewing experience. EX1004, [0010]-[0011]; EX1003, ¶189. Yoakim achieved this through a capsule recognition system that uses an identifier to automatically adjust various brewing parameters, including rotational speed and liquid volume. EX1004, [0192], [0477]; EX1003, ¶189. Brewing parameters are recognized through association with an identification means, which can include an optical code read by a reader. EX1004, [0496], [0525], FIG61-62; EX1003, ¶189.

B. Jarisch

Jarisch (filed May 12, 2011) is prior art under at least pre-AIA 35 U.S.C. §102(e) to Patent Owner's PCT filing date, which is the earliest date the '830 Patent claims are possibly entitled to (*see* Section VII.E). EX1003, ¶190. Jarisch discloses an improved way to position an optical identifier on a capsule, in order to improve readability and retrieval of information about the capsule. EX1005, [0002]-[0003], [0014]-[0015]; EX1003, ¶191. Jarisch further discloses using identification of the optical code to recognize the type of capsule. *Id.*, [0014]-[0015], [0099]; EX1003, ¶191.

Jarisch discloses that its capsule reading may be used by a centrifugal brewing system, such as Denisart (EX1007), which includes many similar features to Yoakim's centrifugal brewing system. EX1005, [0034]-[0035]. Like Yoakim, Denisart discloses a system controlled based on reading the capsule's code. EX1007, 5:19-24; EX1003, ¶192.

Jarisch discloses clear advantages of positioning the optical code on the bottom of the capsule flange in order to provide a location that is "sufficiently away from the liquid injection and beverage delivery areas so that there is a lower risk for the code to become unreadable such if partly or totally hidden or soiled by beverage residues or otherwise," thus improving the reliability of reading. EX1005, [0022], FIG5, [0014]-[0015]; EX1003, ¶¶193-194. The code on the bottom of the flange in Jarisch FIG5 is shown below:

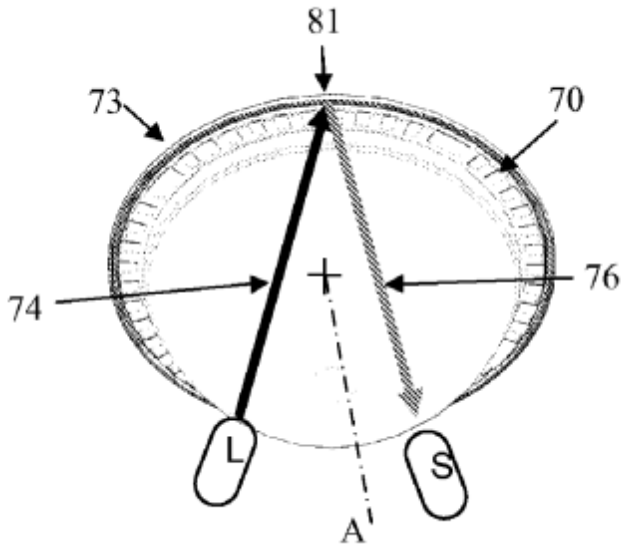

C. Rossi

Rossi (filed March 6, 2009) is prior art under at least pre-AIA 35 U.S.C. § 102(e). Rossi is directed to an edible-product making machine that uses single-use load elements (or capsules) containing water-soluble substances like coffee. EX1041, 3; EX1003, ¶195. The capsule is placed inside the machine, pierced to allow water to enter, and the contents are brewed to create the beverage. *Id.* The brewing parameters, such as the amount of water, temperature, pressure, and time required, vary based on the desired product. *Id.*, 3-4; EX1003, ¶195.

Rossi explains that the user must know the capsule details in order to produce a quality beverage, and prevent "potentially selecting the wrong operating conditions for the desired quality of product, or even producing the wrong product." EX1041, 4; EX1003, ¶196. Rossi acknowledges that "[u]se of an incorrect load element may

cause the machine to malfunction and can prejudice the safety and integrity of the machine and [] may harm the user." *Id.*, 5.

Rossi proposes to solve this problem by "providing a safe and simple system and process" for ensuring the capsule used is suitable. *Id.*, 5; EX1003, ¶197. Rossi discloses a multi-step process that includes (i) recognizing a code on the capsule, and (ii) validating the capsule. *Id.*, 11-12. This is typically accomplished through barcodes or other optical codes on the capsule. *Id.*, 11. The machine will not begin the brewing process unless the capsule identifier is both recognized and validated. *Id.*, 8; EX1003, ¶197.

D. Rapparini

Rapparini (filed October 19, 2010) is prior art under pre-AIA 35 U.S.C. §102(e) to K-fee's PCT filing date. EX1003, ¶198. Rapparini discloses a portion capsule that holds substances for preparing beverages, e.g., coffee. EX1008, [0007]-[0008]; EX1003, ¶198. Rapparini's capsule comprises an annular rim (3) and a cup-shaped body with a series of longitudinal stiffening ribs (4). EX1008, [0009]-[0011]; EX1003, ¶199.

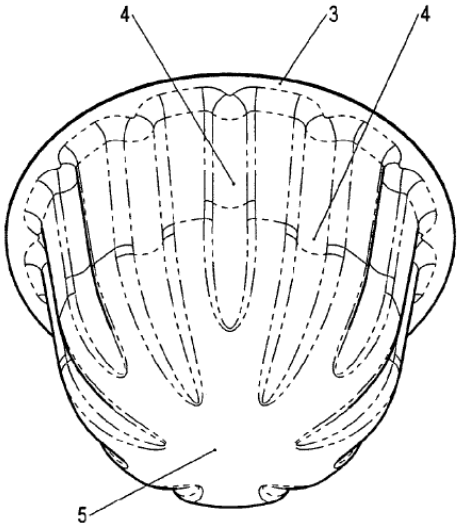

FIG. 6 bis

Rapparini improves upon existing

containers by including longitudinal grooves and ribs along the inner and outer surface of the capsule body, which provide stability and rigidity. EX1008, [0009]-[0011], FIG6, FIG6bis; EX1003, ¶199. Rapparini discloses that its invention is applicable to containers made of several kinds of materials, and varying shapes. Ex. 1008 at [0067]. Rapparini further discloses that the containers can be employed in domestic automatic espresso machines. EX1003, ¶¶200-201.

E. Patent Owner's Foreign Priority Documents Do Not Support the Claims

The earliest possible priority date for the '830 Patent is the date of its PCT application filed on July 22, 2011—not its foreign applications.[4] EX1003, ¶¶154-155. The '830 Patent incorrectly claims priority to three foreign applications:

Application	Filed	Focus
102011010534.4 (EX1045)	2/7/2011	Mechanical improvements to the capsule/cavity wall
102010031988.0 (EX1046)	7/22/2010	Identifiers/preventing unauthorized use
102010044251.8 (EX1047)	9/2/2010	Identifiers/preventing unauthorized use

No single foreign application discloses each and every feature of the '830 Patent claims—in particular, a portion capsule with a plurality of (vertically

[4] Petitioner does not concede that the July 22, 2011 PCT or any later continuations provide written description support for the claims, and reserves all rights to challenge such support.

oriented, claim 8) indentations arranged on the outside surface of the wall about a central longitudinal axis combined with "an optically detectable individualization identifier, which is carried by the bottom surface of the rim" which are features not found in any foreign priority document. EX1003, ¶156. K-fee also cannot demonstrate priority to any earlier-filed application for claims 1-12 because all claims require a "cover [that] is bowed outwardly to a second height in the central region relative to the perimeter of the cover" and wherein "the second height of the cover is less than the first height of the base element." *Id*. Because K-fee cannot combine multiple discrete applications for written description support, it cannot establish priority from any of those applications. *Studiengesellschaft Kohle MBH v. Shell Oil Co.*, 112 F.3d 1561, 1562 (Fed. Cir. 1997) ("[A]n applicant cannot combine multiple prior applications to obtain an earlier filing date for an individual claim. . . .").

1. No Single Foreign Application Discloses Each and Every Feature of the '830 Patent Claims

The February 2011 Application is the only priority application purportedly disclosing vertically oriented indentations and ribs on the exterior and interior of the capsule's body wall, but does not disclose an optically detectable individualization identifier located on the bottom surface of the rim. Nor does it disclose (i) a barrier layer, (ii) a cover bowed outwardly, wherein the second height of the cover is less than the first height of the base element, (iii) a wall region with an electrically

conductive section, or (iv) the sealing configuration of the ’830 Patent. *See generally* EX1045; EX1003, ¶¶157-158. Additionally, the February 2011 Application fails to disclose an optically detectable individualization identifier located *both* on the bottom surface of the rim and on the capsule’s wall. EX1003, ¶158. The figure below disclosing vertically oriented indentations and ribs is not found in any other claimed foreign priority document:

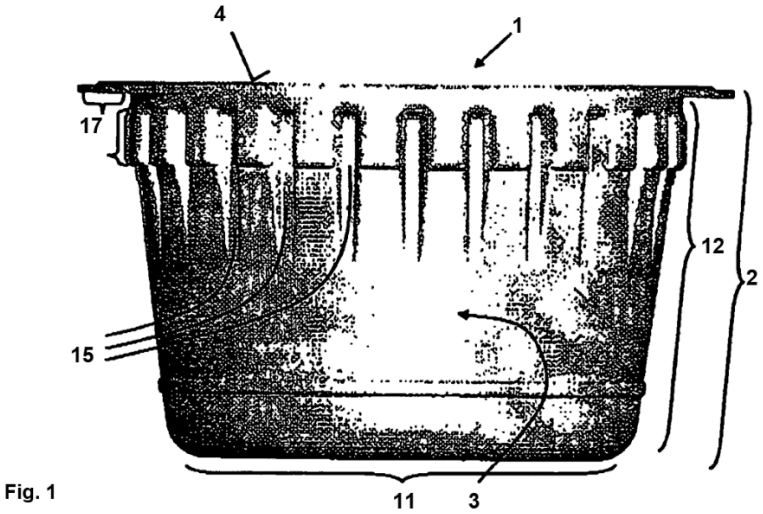

EX1045

The July Application, by contrast, only discloses a barcode located on the capsule’s rim, but does not disclose a capsule with (i) a plurality of indentations arranged on the outside surface of the wall, (ii) vertically oriented indentations/ribs arranged on the outside/inside surface of the wall, (iii) a barrier layer, (iv) a cover bowed outwardly, wherein the second height of the cover is less than the first height of the base element, or (v) an optically detectable individualization identifier located on the bottom surface of the capsule’s rim. EX1003, ¶159; EX1046, generally.

Additionally, the July Application fails to disclose an optically detectable individualization identifier located *both* on the bottom surface of the rim and on the capsule's wall. *Id.* No disclosure satisfies the requirement of a plurality of vertically oriented indentations/ribs as claimed. EX1001, 13:37-38, 14:7-11, 14:29-32.

The September Application only at best discloses a barcode located on the capsule flange and does not disclose a capsule with (i) a plurality of (vertically oriented, claim 8) indentations arranged on the outside surface of the wall, about the central longitudinal axis, or (ii) a plurality of (vertically oriented, claim 8) ribs arranged on the inside surface of the wall (claim 3). EX1003, ¶¶160-162; EX1047, generally. It instead discloses gear-like capsule rims located on the flange of the capsule (2.4.2), which are not vertical indentations or ribs on the capsule body or cavity. EX1001, 12:4-8 EX1003, ¶¶160-162; EX1047, FIGS16-18.

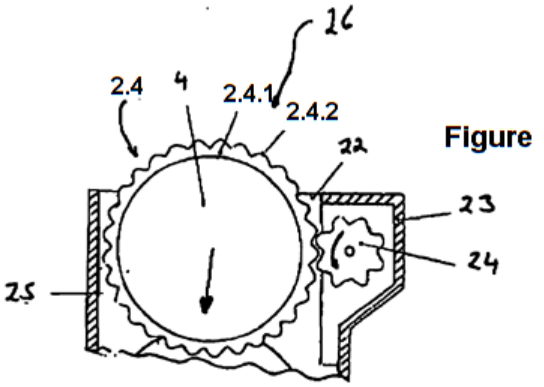

Figure 18

K-fee cannot demonstrate that the '830 Patent has priority to any earlier-filed applications for claims 1-12 because all claims require: (i) "an optically detectable

individualization identifier, which is carried by the bottom surface of the rim" and (ii) a plurality of (vertically oriented, claim 8) indentations arranged on the outside surface of the wall. EX1003, ¶¶157-162. In addition, claims 3 and 8-12 require a plurality of (vertically oriented) ribs on inside surface wall. Because none of the three foreign applications disclose any embodiments satisfying each and every claim limitation of the '830 Patent, it is not entitled to any foreign priority date. EX1003, ¶156. *PowerOasis, Inc. v. T-Mobile USA, Inc.*, 522 F.3d 1299, 1306 (Fed. Cir. 2008).

In addition, all claims lack priority because no application discloses a cover bowed outwardly, wherein the second height of the cover is less than the first height of the base element, as discussed in further detail below. EX1003, ¶163; EX1047, generally.

Claims 2-7 and 10 further lack priority because no application discloses an optically detectable individualization identifier located both on the bottom surface of the rim and on the capsule's wall. EX1003, ¶156.

2. No "cover [that] is bowed outwardly to a second height in the central region relative to the perimeter of the cover"

A POSITA would understand that the Figures in the September Application, taken as a whole, disclose a capsule with a flat cover. EX1003, ¶164. For example, FIG1 and FIGS6-8 are shown below:

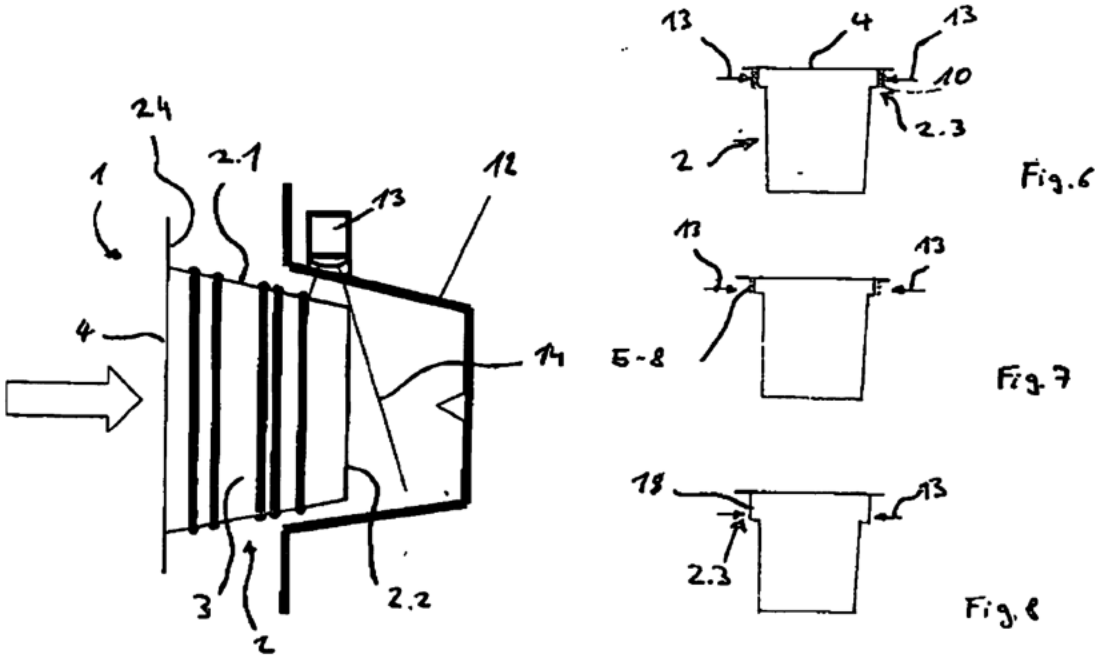

A POSITA further would not consider FIG16 to disclose a bowed cover in the context of the September Application, which depicts only flat covered capsules. Consistent with this, FIG16 depicts to a POSITA, at best, the depth and inner circumference of the capsule body and rim. EX1003, ¶¶165-166. FIG16 shows the capsule membrane pierced by element 29. *Id*. FIG16 also shows the machine's brewing head (27) and water inlet (28) flush with the flat capsule membrane, and *below* the curved region, thus demonstrating it is not the cover of the capsule. *Id*.

September Application	**'830 Patent**

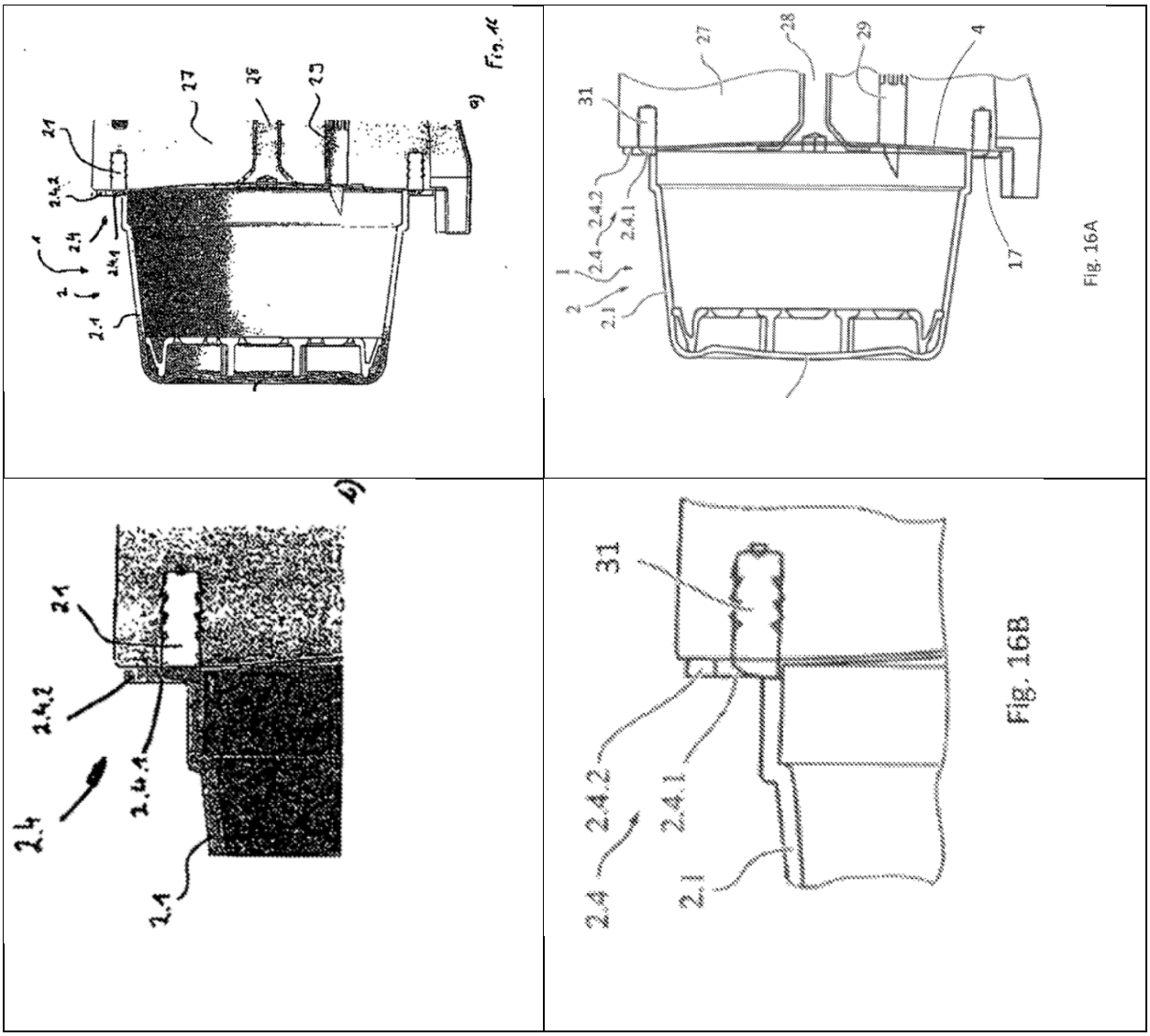

3. No cover wherein "the second height of the cover is less than the first height of the base element"

For similar reasons, the September Application also fails to disclose a cover wherein "the second height of the cover is less than the first height of the base element." This is because a POSITA would understand the Figures in the September Application to disclose a capsule with a ***flat*** cover, which necessarily fails to have a "second height"—it has no height at all. EX1003, ¶¶167-168. K-fee's infringement

contentions align with this interpretation and, when compared to the September Application, evidence the lack of priority:

EX1049	EX1047
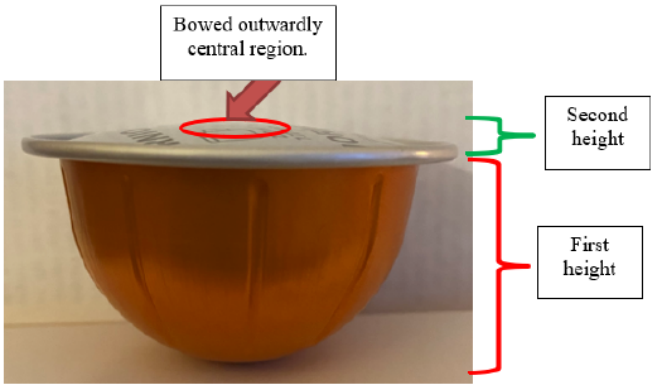	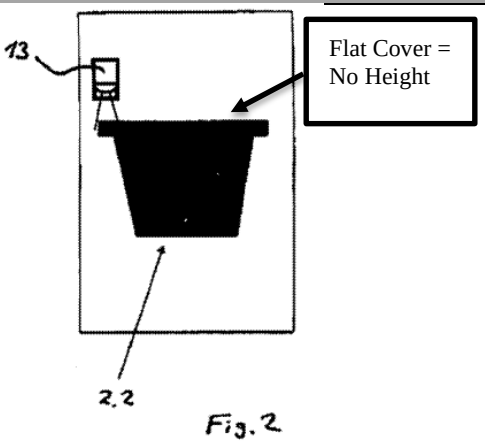

Compare EX1049, 158-159 (showing rounded cover) with EX1047, FIG2 (showing flat cover) (annotated); FIGS1-18 (showing capsules only with flat covers); EX1003, ¶169.

4. No Disclosure of the Claimed Invention

In addition to lacking all claim elements in any given priority filing, the September Application fails to disclose the invention as claimed in the ’830 Patent. *Hyatt v. Dudas*, 492 F.3d 1365, 1371 (Fed. Cir. 2007) (“[I]t is not enough that applicant show where each claimed element resides in the earliest filed application but [he] must also provide support for the *linkage of the claimed elements creating the embodiment*”). “The written description requirement is not met when, as here, the specification provides at best disparate disclosures that an artisan might have been able to combine in order to make the claimed invention.” *Flash-Control LLC*

v. Intel Corp., 2021 WL 2944592, at *4 (Fed. Cir. 2021).

The September Application discloses several distinct embodiments of an identifier, yet fails to disclose the ’830 claimed invention. EX1003, ¶170. For example, FIG1 discloses a capsule with an identifier made of several raised areas 8, with which it can be determined if the capsule is suitable for use with the machine. EX1047, 37:27-30, 37:14-19. However, this embodiment (below), does not disclose at least the claimed a cover bowed outwardly to a second height in the central region relative to a peripheral region of the cover, a cover having a second height that is less than the first height of the base element, a plurality of indentations arranged on the outside surface of the wall about the central longitudinal axis, or the claimed seal configuration. EX1003, ¶171. It also does not depict an individualization identifier located both on the bottom surface of the rim and on the capsule’s wall. *Id.*

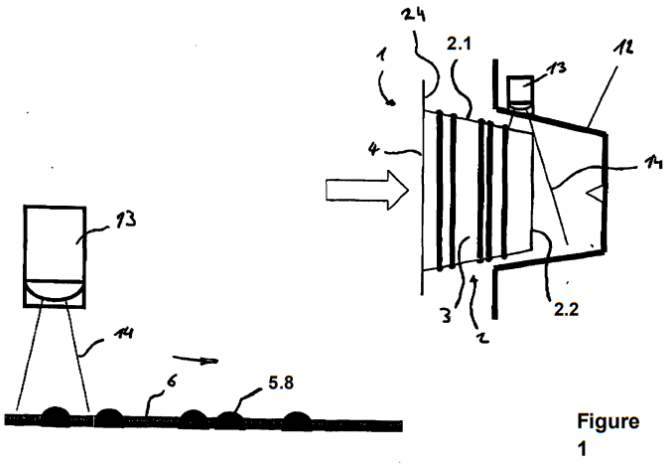

The text describing FIG1 further explains how the identifier would be used to influence the machine’s operation, and states this “applies to all other examples,”

but does not indicate to a POSITA that multiple distinct identifier embodiments would be combined with one another (let alone in any specific combinations). EX1047, 37:37-38:10; EX1003, ¶172.

FIG2 discloses an alternative embodiment of a capsule with a *barcode* that is read from above, or alternatively, "on that side of the peripheral region of the basic element which is directed away from the membrane." EX1047, 38:11-27. However, this embodiment also fails to disclose the limitations identified above.[5] EX1003, ¶173.

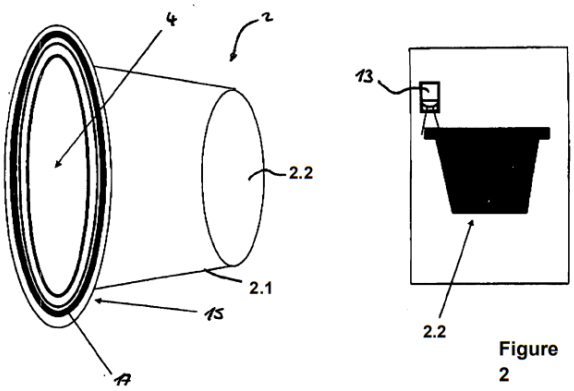

FIGS16-17 and the text describe another distinct embodiment of a capsule that is designed with a "toothed ring" around the "outer region" of the flange. EX1047,

[5] The same is true for FIGS3-15, which disclose additional distinct embodiments lacking the same limitations identified above. EX1047, 38:29-41:11; EX1003, ¶174.

41:17-31; 35:8-11, FIG18 (flange's outer edge interacts with pinion 24); EX1003, ¶¶175-176. In only this embodiment, the specification explains "[p]referably a sealing surface 2.4.1 is provided in the peripheral region 2.4, on the inside in respect of this toothed ring, and interacts with sealing action with a seal 21." EX1047, 41:27-31. The specification further explains that if this feature was not present "the retaining arms could not retain the capsule and the capsule, rather than being introduced into the brewing chamber, would drop through into a waste container." EX1047, 42:8-14; EX1003, ¶¶175-176. The "toothed ring" element 2.4.2 is a "form-fitting and/or friction-fitting means and/or a detection means 2.4.2." EX1047, 41:25-27. It is not a generic identifier, nor is it located on the bottom side of the flange. EX1003, ¶177. There is also no language that ties the disclosure referencing FIG16-18 to any other Figure or embodiment, EX1047's specification uses different numbers to indicate different identifiers (p. 44), and EX1047 never explains how a barcode or optically detectable individualization identifier could replace means 2.4.2 and still retain the capsule within the device. EX1003, ¶178; IPR2023-00485, Paper 9, 13 (PTAB Sept. 13, 2023).

Accordingly, the specification lacks any disclosure linking together the disparate features across these embodiments, particularly (i) the claimed optically detectable individualization identifier—located on the bottom surface of the rim, (ii) a cover that is bowed outwardly to a second height in the central region relative to

the perimeter of the cover, (iii) a cover having a second height that is less than the first height of the base element, (iv) a plurality of indentations arranged on the outside surface of the wall about the central longitudinal axis (which are described as yet another identifier), (v) a plurality of vertically-orientated indentations arranged on the outside surface of the wall, (vi) a plurality of vertically-orientated ribs arranged on the inside surface of the wall, or (vii) the claimed seal configuration. EX1003, ¶179. Accordingly, "[t]aking each claim—as we must—as an integrated whole rather than as a collection of independent limitations, one searches the [September Application] in vain for the disclosure of even a single species that falls within the claims or for any 'blaze marks' that would lead an ordinarily skilled investigator toward such a species among a slew of competing possibilities." *Novozymes A/S v. DuPont Nutrition Biosciences APS*, 723 F.3d 1336, 1349 (Fed. Cir. 2013).

Moreover, the boilerplate statements in the September Application do not demonstrate to a POSITA that the Applicant had possession of the '830 claimed invention, as it fails to link any of the claimed features together. EX1003, ¶180. *D-Three Enterprises, LLC v. SunModo Corp.*, 890 F.3d 1042, 1051 (Fed. Cir. 2018).

Nor do the multiple-dependent claims at the end of September Application provide written description support, or provide any "blaze marks" such that a POSITA would arrive at the '830 claims. Those claims are only directed to a portion

capsule, and fail to disclose any details of the brewing system. EX1003, ¶181. They also fail to disclose any identifier on the bottom of the rim. *Id.* The Federal Circuit rejects such attempts at using multiple-dependent claims to satisfying the written description requirement, particularly where, as here, they result in "bizarrely complex chains of cross-reference claims." *FWP IP ApS v. Biogen MA, Inc.*, 749 Fed.Appx. 969, 977 (Fed. Cir. 2018).

"To the extent that [K-fee] contends that a person of skill in the art would isolate and combine aspects from various embodiments in the specifications . . . to obtain the claimed invention, [K-fee] relies upon the wrong test. '[A] description that merely renders the invention obvious does not satisfy the [written description] requirement.'" *Purdue Pharma LP v. Recro Tech. LLC*, 694 Fed.Appx. 794, 797-98 (Fed. Cir. 2017).

Accordingly, the '830 claims do not receive priority to their foreign filings. EX1003, ¶182.

VIII. CLAIMS 1-12 ARE UNPATENTABLE UNDER §103

A. Ground 1: Claims 1-2 and 4-7 Would Have Been Obvious Over Yoakim in view of Jarisch and Rossi

1. Motivation to Combine Yoakim, Jarisch, and Rossi

Yoakim discloses nearly all claim elements. EX1003, ¶203. In IPR2022-01574, K-fee did not dispute that Yoakim, Jarisch 929 and Rossi taught the majority of claim limitations, except the pump, groove and seal, and ledge limitations. Paper

17, 46-58. A POSITA would have been motivated to combine the single-serve brewing system, capsule, and concepts of Yoakim, with Jarisch, and Rossi to predictably arrive at the ’830 claims. EX1003, ¶203.

Yoakim, Jarisch, and Rossi are all analogous art in the field of portion capsule beverage extraction, each disclosing an invention that may be applied in automatic coffee/espresso machines. EX1003, ¶204; EX1004, [0002]-[0003]; EX1005, [0001]-[0002]; EX1041, 3. Yoakim, Jarisch, and Rossi are all designed to use capsule identifiers to optimize beverage machine operation and can use optical codes to achieve this. EX1003, ¶204; EX1004, [0010]-[0011], [0025], [0494]-[0496]; EX1005, [0006], [0016]-[0017], [0024]; EX1041, 5-6, 11.

Yoakim and Jarisch share a common applicant—Nestec SA—and a common inventor. EX1003, ¶205. Jarisch expressly discloses it is intended to be used with a centrifugal-style brewing system like the one in Denisart (EX1007), which shares two common inventors with Yoakim. *Id.*; EX1005, [0034]-[0035].

Denisart (another Nestec patent) is expressly disclosed as part of the Jarisch system and is similar to the Yoakim system, both systems including (1) support for the capsule body; (2) elements to pierce the capsule in its center to inject fluids; (3) elements to pierce the capsule along the periphery to allow liquid to exit under centrifugal forces; and (4) compatibility with code readers to identify the capsule and adjust brewing parameters. EX1007, FIG1; EX1003, ¶¶205-206. Jarisch is

explicitly intended to be used with centrifugal brewing systems like Yoakim. *Id.*

Jarisch also discloses motivations for a POSITA to combine the brewing and capsule identification system of Yoakim with the code location of Jarisch on the bottom of the rim of the capsule. EX1003, ¶¶206-207. Jarisch explicitly teaches positioning an optical code "on the bottom of the rim of the capsule which is opposed to the lid of the capsule." EX1005, [0022]. Jarisch explains that its proposed code positioning is desirable because it is "sufficiently away from the liquid injection and beverage delivery areas so that there is a lower risk for the code to become unreadable such as if partly or totally hidden or soiled by beverage residues or otherwise (e.g., coffee particles). As a result, the reading is made more reliable." *Id.*, [0022]; EX1003, ¶208. Accordingly, a POSITA would be motivated to use Jarisch's optical code and its positioning of the code on the bottom of the rim. EX1003, ¶¶207-209.

A POSITA would also have an expectation of success when combining Yoakim and Jarisch, as Jarisch expressly discloses how to modify a brewing chamber like Yoakim's to position an optical reader to read a code positioned on the bottom of the capsule rim. EX1003, ¶210. Specifically, Jarisch discloses placing the light source at the bottom of the capsule support chamber, *i.e.*, the centrifugal cell 3, and configuring the capsule support chamber to be a light conductive material such that a light source will reach the bottom of the capsule flange. EX1005, [0082];

EX1003, ¶210. Jarisch further discloses mirrors to better position the optical light source and sensor. Thus, Jarisch teaches how to position the Yoakim sensor/detector below and ***away*** from the flow path. EX1005, [0082] ("[T]he light source is placed at the bottom of the centrifugal cell 3. **This cell is light conductive allowing the beam to reach the bottom side** 72 or its rim 73."). The Jarisch optical reader configuration is depicted below left in order to read the code on the capsule (yellow) with the light path (red) shown from detector (62) to capsule rim (73), and an example of such a modification to Yoakim is shown right. EX1005, FIG. 4; EX1004, FIG. 61.

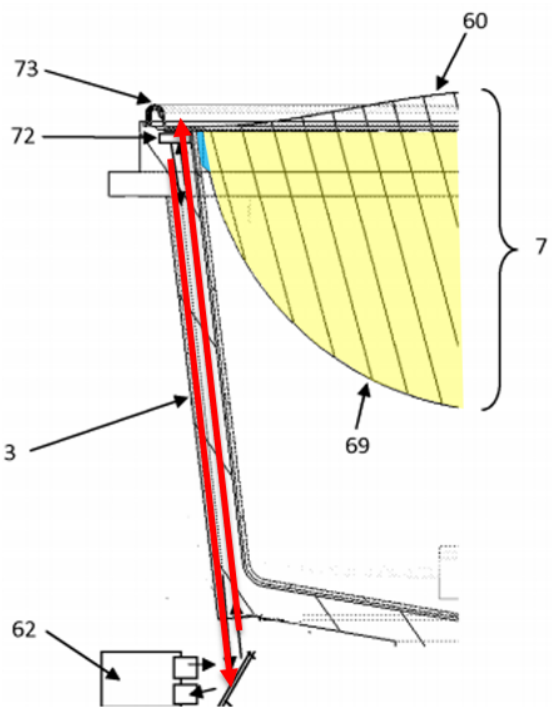

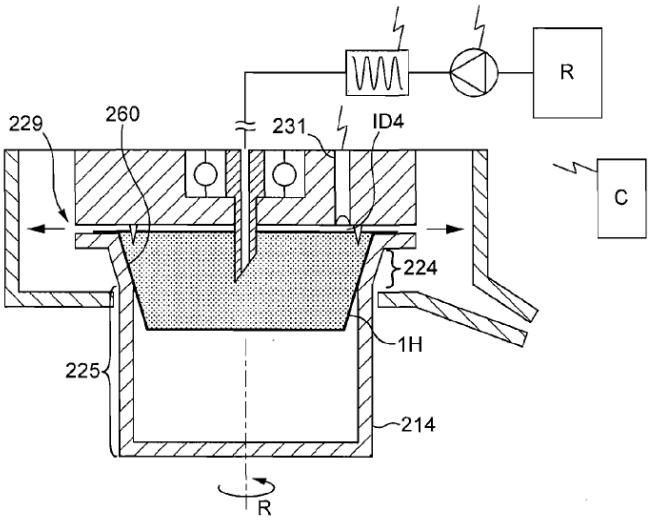

FIG. 61

A POSITA would therefore find it obvious to combine Yoakim and Jarisch to achieve the express benefits of the code location of Jarisch. EX1003, ¶210.

A POSITA would further find it obvious to combine the systems of Yoakim and Jarisch with the capsule recognition process of Rossi for the predictable benefit of "providing a safe and simple system and process for ensuring that an appropriate [capsule] is used" in the system. EX1041, 5; EX1003, ¶211. Yoakim discloses using a piston pump to deliver higher pressure water, if desired. EX1004, [0428]. Yoakim also discloses that its centrifugal brewing generates pressure within the system, including high pressure for espresso. EX1004, [0188] ("The higher the rotational speed, the more radial pressure is exerted . . . ."); [0191] ("The rotational speed ranges differ as a function of the coffee type to be delivered," including "espresso."); [0369] ("maintain a pressure of several bars"). Yoakim also uses hot water. EX1004, [0506]. Thus, a POSITA would look to Rossi to address "the use of high pressure, high temperature water, which poses a potential health hazard if the machine is not used correctly or malfunctions." EX1041, 5.

A POSITA would have further been motivated to combine the portion capsule and brewing systems of Yoakim and Jarisch with the capsule recognition process of Rossi for the predictable benefit of greater specificity and accuracy of brewing conditions, and increased safety in the machine from preventing operation with unsuitable capsules. EX1003, ¶211. Rossi explains that "use of an incorrect [capsule] may cause the machine to malfunction and can prejudice the safety and integrity of the machine and [] may harm the user." EX1041, 5. Rossi explains that

"allowing the machine to take further steps only if it also recognises on the [capsule] the validation element" results in "avoiding the production of an edible product of inferior quality and ensuring the proper functioning of the machine." EX1041, 7. Accordingly, a POSITA would understand that Rossi provides motivation for using an optical code to ensure the capsule is suitable for use with the machine, and only initiates the brewing process upon such a determination. EX1003, ¶¶211-212.

A POSITA would also have an expectation of success when combining Rossi's recognition system with the brewing machine and capsules disclosed in Yoakim and Jarisch. EX1003, ¶213. Rossi expressly discloses that its invention is intended to improve systems relating to "edible-product making machines . . . such as coffee machines fed with capsules containing coffee powder." EX1041, 5. Rossi further explains that its system identifies the capsule using "barcodes, antennae, or paints having optically measurable properties" that can be read by a "barcode reader, radio frequency wave transmitter and receiver, or optical sensor." EX1041, 11. Accordingly, Rossi uses technology already disclosed in Yoakim and Jarisch to recognize the capsule. *Id.* Rossi also explains how to recognize a capsule, by comparing the read code "with pre-stored data in order to allow the machine to proceed to activation ***only*** if it" recognizes the capsule. *Id.* Furthermore, Yoakim and Jarisch possess capsule identification capabilities that a POSITA would expect to work with Rossi. EX1004, [0477]; EX1005, [0040]-[0100]; EX1003, ¶213.

Rossi teaches safety features—such as identification and validation elements—to determine whether to brew a suitable beverage, and offers additional advantages beyond Yoakim. Rossi includes information about the proper capsule and operating conditions that "helps to prevent [] safety hazard[s]" and prevents "re-use" of capsules that can cause "incorrect functioning of the machine and the associated health hazard." EX1041, 7.

Rossi offers additional advantages over Yoakim since, e.g., Yoakim would allow unsafe brewing of compatibly-shaped capsules that otherwise are not designed for the system, or have been improperly re-used because Yoakim's "gripping structure" only checks for a complementary shape. Thus, a POSITA would have been motivated to use Rossi's safety features with Yoakim to improve safety, ensure proper functioning of the machine, and avoid inferior quality beverage. EX1003, ¶214.

Accordingly, it would have been obvious to a POSITA to combine the teachings of Yoakim, Jarisch, and Rossi to arrive at the '830 claims. EX1003, ¶215.

2. Claims 1/8[6]

[6] See Claims Appendix for a complete set of claim language. Due to the repetition of claim language in the claims (in particular claims 1/8), the claim elements for later-addressed claims are only identified once herein.

a) Preamble

Yoakim discloses "a portion capsule for making a beverage." Yoakim discloses a single-serve capsule containing a food substance for making a beverage. EX1004, [0002], [0180]; EX1003, ¶¶217-220. Yoakim discloses exemplary capsules and their details, which are described and shown in FIGS6-7 and FIGS26-27. EX1004, [0414], [0197], [0219]; EX1003, ¶¶217-220.

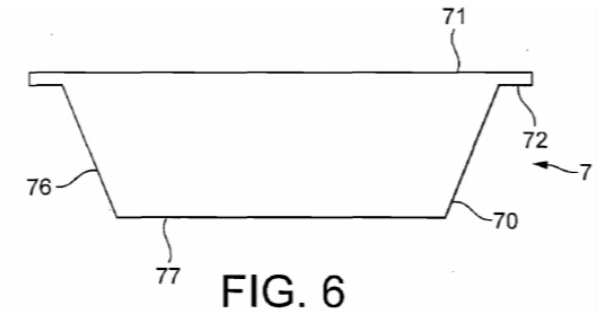

FIG. 6

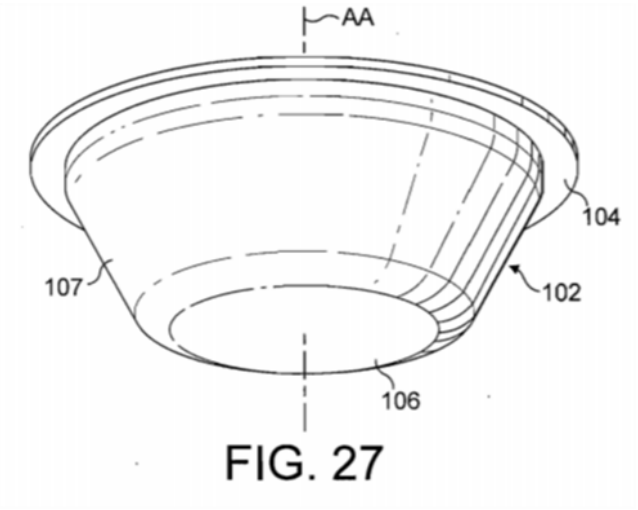

FIG. 27

b) [1.a]/[8.a]

Yoakim discloses a portion capsule with a base element (70, 102) having a cavity that may be filled with raw beverage materials such as "ground coffee powder [and] soluble coffee." EX1004, [0125], [0180], [0197]-[0198], [0414], FIGS6-7, 26-27; EX1003, ¶¶221-223.

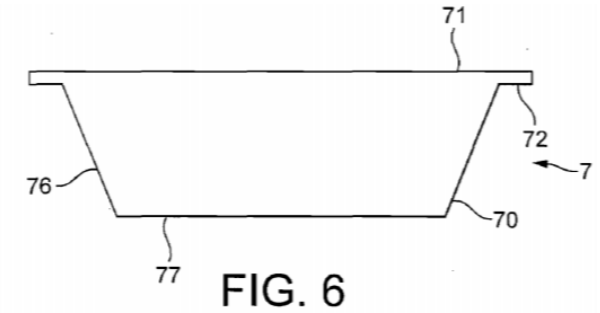

FIG. 6

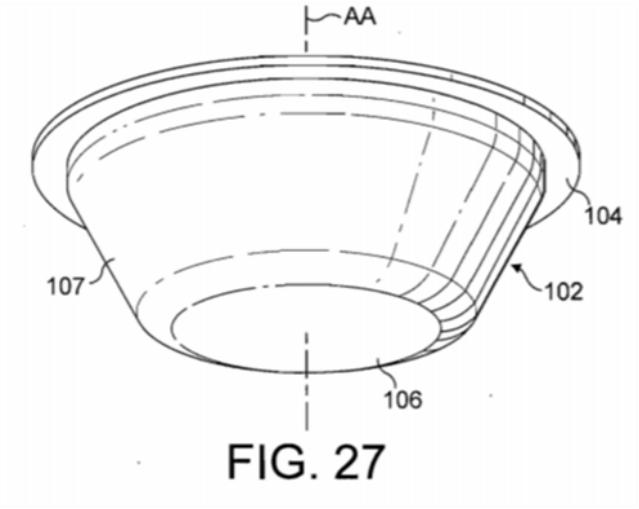

FIG. 27

c) [1.b]/[8.b]

Yoakim explicitly discloses the base element including a wall (76, 107) that is symmetrical about the central longitudinal axis (centerline AA), according to K-fee's Contentions. EX1004, [0014], [0308], [0414]-[0415]; EX1003, ¶¶224-226.

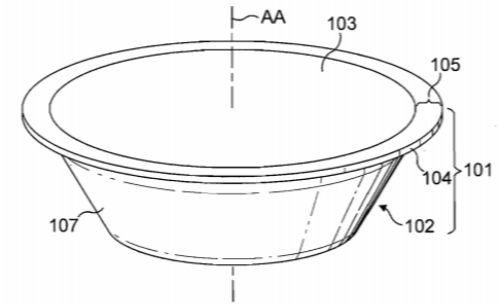

FIG. 26

d) [1.c]/[8.c]

Yoakim discloses a capsule with an open end and closed bottom portion. Specifically, Yoakim discloses a capsule with a closed "bottom wall" (106) and an open end, which is then covered by sealing foil 103. EX1004, [0129], [0414], [0473], FIGS6, 26-27; EX1003, ¶¶227-228.

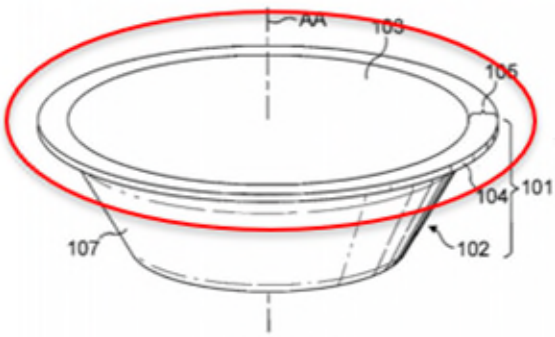

FIG. 26

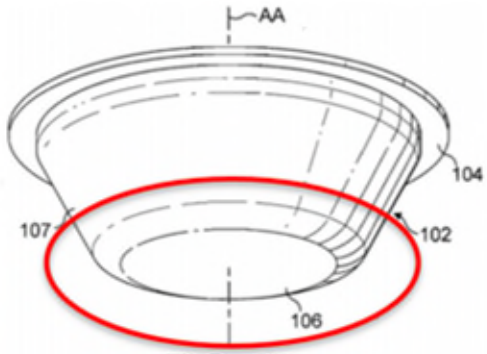

FIG. 27

e) [1.d]/[8.d]

Yoakim discloses a base element having a first height defined between the open end and the closed bottom portion. EX1004, [0414]-[0415], FIGS6, 26-27; EX1003, ¶229. For example, this height is shown as 101 in FIG26, from the base of the capsule to the open portion of the flange, covered by a membrane 103.

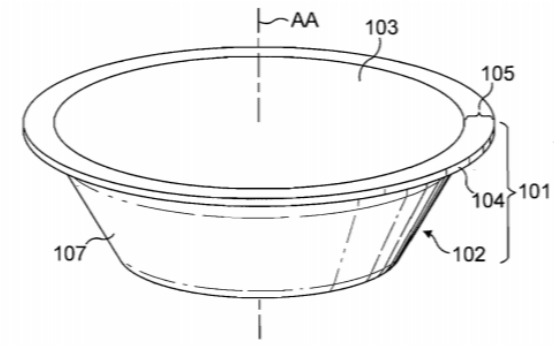

FIG. 26

Additionally, Jarisch discloses a capsule with a base element having a first height defined between the open end (which is sealed with membrane (60)) and the

closed bottom portion (69), as shown in FIG4. EX1005, [0036], FIG4; EX1003 ¶¶230-231.

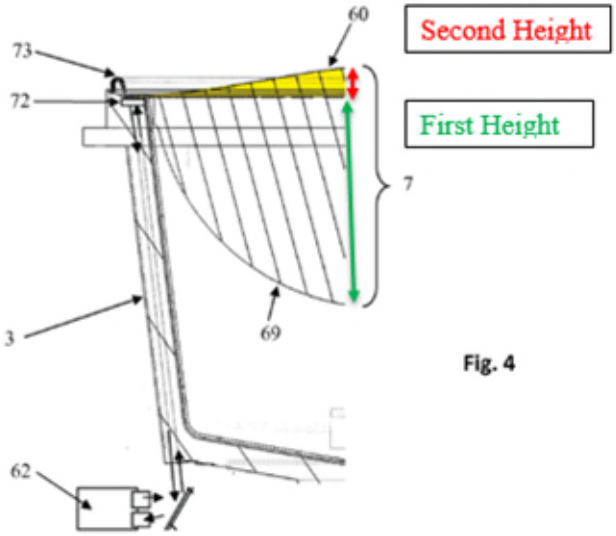

Fig. 4

f) [1.e]/[8.e]

Yoakim discloses a portion capsule having a wall that has an outside surface and an inside surface that faces the beverage material. EX1004, [0197] ("In FIG. 6, the capsule 7 comprises a cup-shaped body 70 with upwardly oriented sidewall 76 and a bottom wall 77. The sidewall forms a portion of cone which promotes the collection of the brewed liquid internally. The body terminates by an upper edge 72 raising outwards onto which is sealed a lid 71."), [0414], FIGS6-7, 26-27; EX1003, ¶232. Yoakim further discloses that the cavity that may be filled with raw beverage materials such as "ground coffee powder [and] soluble coffee." EX1004, [0125], [0180], [0197]-[0198]; EX1003, ¶233. FIG28 (shown below) depicts the portion

capsule's internal enclosure 114 wherein the inside surface of the capsule side wall 107 faces the food substance 122. EX1004, [0415], FIG28; EX1003, ¶¶234-235.

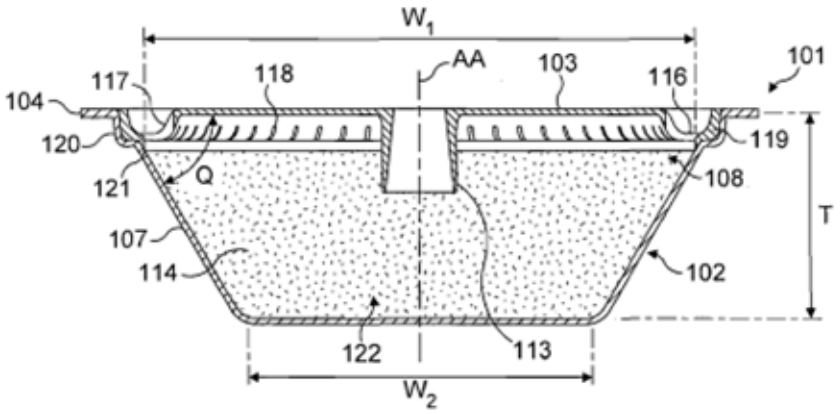

FIG. 28

g) [1.f]

Yoakim discloses a base element that comprises a wall with an outside surface that includes a plurality of indentations arranged about the central longitudinal axis. Specifically, Yoakim discloses a capsule with a body including a toothed structure around its perimeter, which Yoakim explains can be used to engage the capsule in the centrifugal brewing system to facilitate controlled rotation during brewing. EX1004, [0215] ("[The] capsule has a toothed structure 75 on at least one of its outer surface[s] . . . The toothed structure comprises a series of teeth which is positioned below the edge or rim 72 of the body of the capsule. The teeth are placed along the whole periphery of the body of the capsule."); EX1003, ¶¶236-237.

As depicted in FIG23, the indentations (green dashes) are arranged about the

central longitudinal axis (red). EX1003, ¶238.

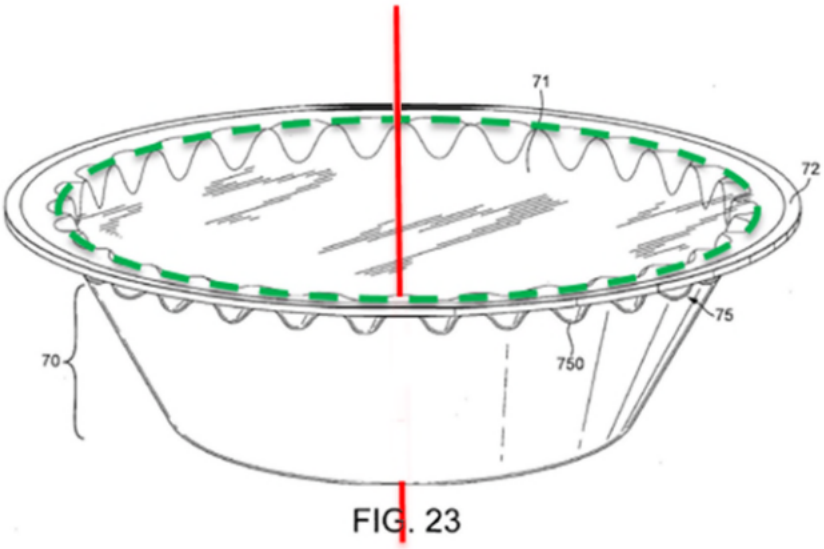

Yoakim further discloses that "the teeth could be replaced by other equivalent structures such as series of elements in relief and/or hollow. For example, slits, pins or small needles can be envisaged." EX1004, [0215]. Such relief structures, in particular slits, pins or small needles, would likewise constitute indentations arranged about the central longitudinal axis of the outside surface of the wall. EX1003, ¶237.

It would also have been obvious to a POSITA to utilize indentations about the longitudinal axis on the outside surface of the wall of the capsule in order to provide a "means for connecting [the capsule] to the external rotational driving means of the device" to facilitate controlled rotation during beverage extraction, and also because it was well-known in the art to increase mechanical stability of the capsule body wall. EX1004, [0215]; EX1003, ¶¶87-95, 239-240; EX1008, EX1030-1035.

h) [1.g]

Yoakim discloses a ledge formed at the inside surface of the wall and projecting towards the central longitudinal axis, the ledge is spaced below the open end of the base element. EX1003, ¶¶241-244. Yoakim discloses a ledge comprising a "collecting recess 116" that includes "an outer peripheral portion 119 forming an edge bearing onto a seat portion 120 of the dished body." EX1004, [0420], [0414]. FIG28 is covered by membrane 103, and the ledge is inside the capsule as defined by the membrane. Annotated FIG28 clearly shows the ledge in red at the inside surface of the wall projecting towards the central longitudinal axis, in the seat portion 120 of the dished body, and below the open of the base element. EX1003, ¶242.

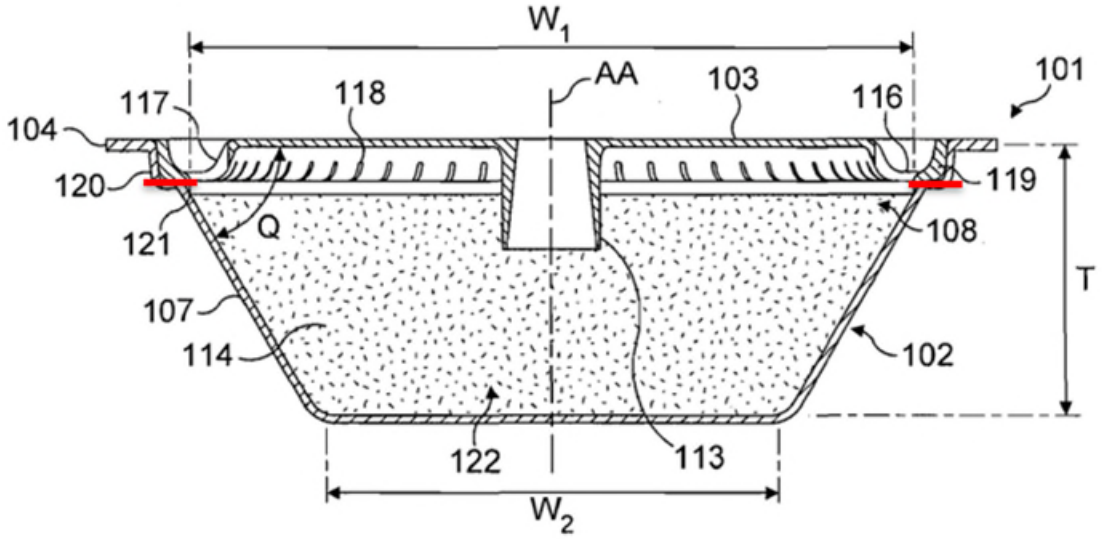

FIG. 28

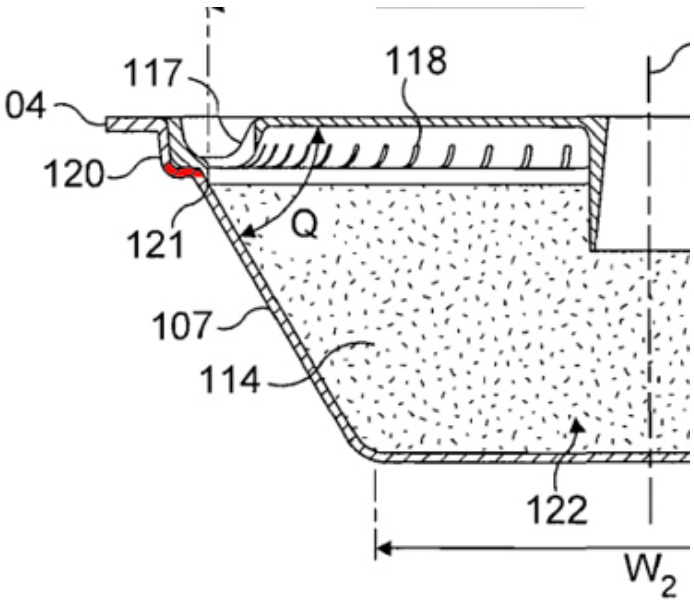

It would have been obvious to a POSITA to utilize the claimed ledge configuration in a centrifugal brewing capsule to provide space for brewed coffee to gather before exiting the capsule into the user's cup, which further facilitates crema formation. EX1004, [0332]; EX1003, ¶243. It would also have been obvious to a POSITA to utilize the claimed ledge configuration as an obvious design choice, as capsules utilizing a ledge were well-known to those skilled in the art. EX1003, ¶244; EX1010, FIG14-15; EX1021, FIG7; EX1033, FIG1-8.

i) [1.h]/[8.h]

Yoakim discloses a capsule with a cup-shaped body, having a rim (72) at the open end of the base element (70) and comprising a top surface and an opposing bottom surface. EX1004, [0197]; EX1003, ¶246.

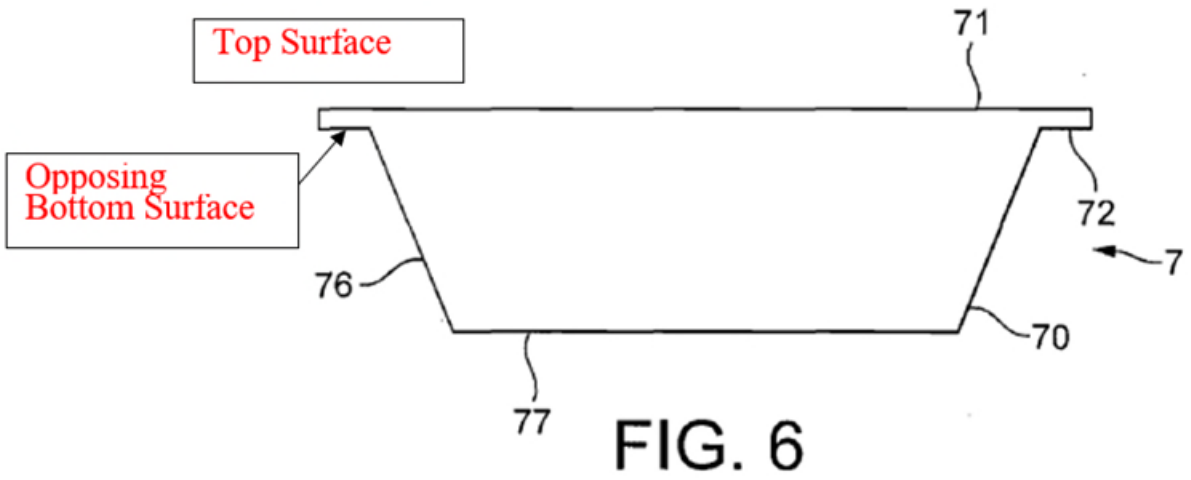

FIG. 6

FIGS26-27 also show a rim having a top surface and an opposing bottom surface. Yoakim explains that the body (102) has a peripheral rim 104 that extends outwardly forming an annular portion. EX1004, [0414]; EX1003, ¶¶247-249.

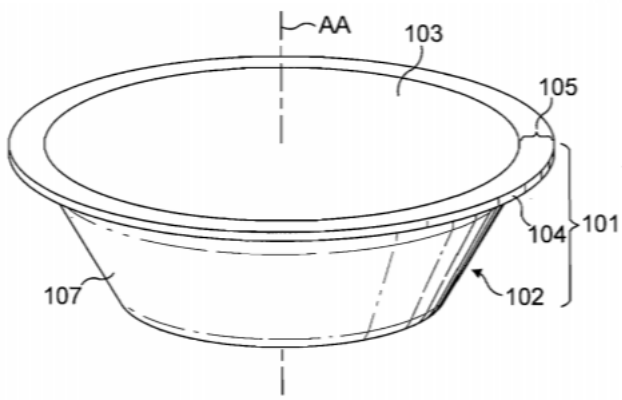

FIG. 26

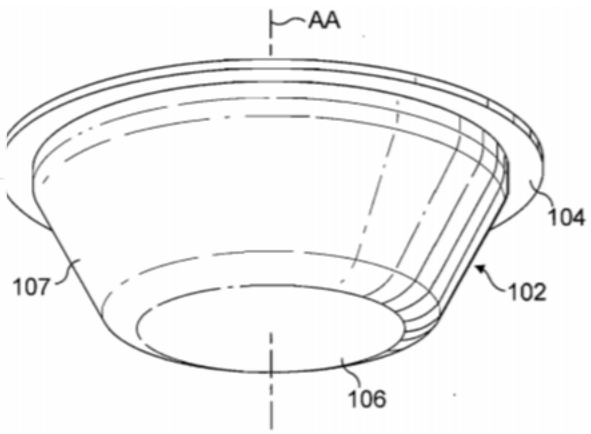

FIG. 27

j) [1.i.]/[8.i]

Yoakim discloses using an "identification" system to identify each capsule and adjust the brewing parameters accordingly. EX1004, [0477]. Yoakim discloses

that this helps deliver a wider range of beverages having differentiated characteristics. *Id.*, [0477], [0526]; EX1003, ¶250. Yoakim further discloses that the identifier used on the capsule can be an optically detectable code, such as a barcode. *Id.*, [0496]; EX1003, ¶251.

Jarisch discloses a near-identical centrifuge-style brewing system that includes an optical code reader (62) to read a code on the capsule, recognize a type of capsule, and adjust brewing parameters accordingly. EX1005, [0006], [0024], [0082], [0034]-[0035], FIGS1-4; EX1003, ¶252. Jarisch further discloses that the code is on the bottom surface of the rim, specifying that this is the optimal location to lower the risk of the code becoming unreadable. EX1005, [0022] ("The bottom of the rim is sufficiently away from the liquid injection and beverage delivery areas so that there is a lower risk for the code to become unreadable[.]"); EX1003, ¶¶253-254.

The code location is depicted in FIG5 (below):

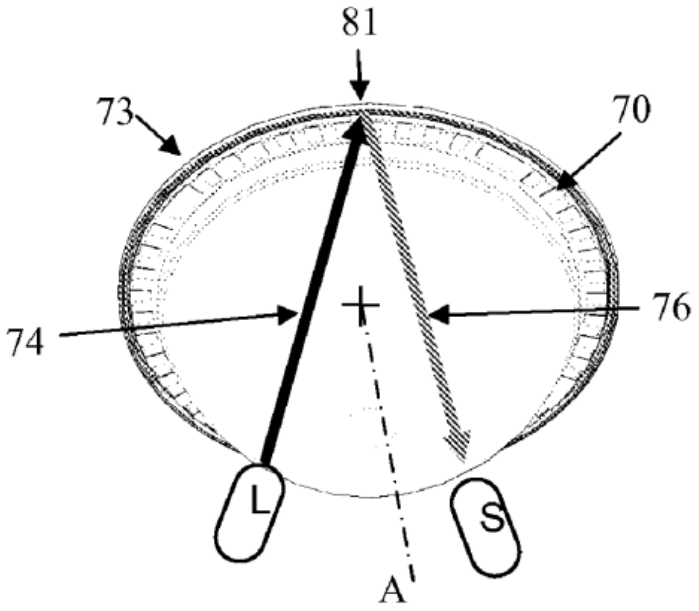

Accordingly, a POSITA would be motivated to utilize Jarisch to place the optically detectable individualization identifier on the bottom surface of the rim to improve reliability of reading. *Id.*; EX1003, ¶254; Section VIII.A.1.

To the extent "identifier" is construed as a "feature that individualizes the portion capsule" and "individualization" is construed as "to determine whether the portion capsule is suitable for use with the beverage machine such that the use of unsuitable capsules is prevented," as Nespresso has proposed in district court litigation, Rossi explicitly discloses utilizing an identifier for this purpose. For example, Rossi explains that prior art machines "are usually designed so as to operate with a certain design or type of load element" and "[u]se of an incorrect load element may cause the machine to malfunction and can prejudice the safety and integrity of the machine and may harm the user." EX1041, 5. Rossi seeks to solve

this problem by "providing a safe and simple system and process for **ensuring that an appropriate load element is used**." *Id*.; EX1003, ¶255.

Rossi determines **whether it recognizes** the identification element, and a failed recognition would indicate to a POSITA that the capsule is not proper for use with the machine. EX1041, 7 ("The use of an identification element and recognition means . . . helps to prevent the safety hazard associated with inappropriate operating conditions."); EX1003, ¶255. Rossi additionally discloses this feature through the identification of a "validation element" that ensures only capsules proper for use activate the machine. EX1041, 7; EX1003, ¶256. A POSITA would understand that already-used capsules would constitute a group of capsules that are not suitable for use with the machine. *Id.* Rossi also discloses that the identification and verification elements can be optical codes located on the capsule, and can both be the same element. EX1041, 11, 9, 13; EX1003, ¶257.

Rossi further discloses preventing use of a capsule that is not "suitable for use." EX1041, 9 ("Thus, the production process cannot be activated unless the first step has been completed."). Rossi further explains that production of a beverage will only occur after the identifying element is recognized. EX1041, 8, 12; EX1003, ¶¶258-259.

It would have been obvious for a POSITA to combine the process of Rossi with Yoakim and Jarisch to arrive at the claimed invention. Section VIII.A.1.

k) [1.j]/[8.j]

Yoakim in combination with Jarisch and Rossi discloses and/or renders this limitation obvious. As discussed above, Yoakim, Jarisch and Rossi disclose an optically detectable individualization identifier, according to K-fee's Contentions. Section VIII.A.2.(j). Yoakim discloses that the capsule can include an individualization identifier, which can be a barcode or optically visual code. EX1004, [0496], [0525]; EX1003, ¶261. Additionally, Jarisch discloses an optical code with surface areas having different optically detectable reflective properties. EX1005, [0019] ("Preferably, the code is printed or embossed to form a pattern which possesses surfaces having ***different reflective*** and/or absorbing properties to light. In particular, the pattern possesses ***first surfaces*** and ***second surfaces*** having ***different reflective*** and/or ***absorbing properties to light***. More particularly, the pattern possesses ***first surfaces*** inclined ***mirroring*** or ***absorbing properties to light*** and ***second surfaces*** having flat mirroring or flat ***reflective properties*** to light."), [0044]-[0045], [0064], [0087], Claims 8-9; EX1003, ¶262.

Rossi also discloses that its system identifies the capsule using "barcodes, antennae, ***or paints having optically*** measurable properties" that can be read by a "barcode reader, radio frequency wave transmitter and receiver, or ***optical sensor***." EX1041, 11; EX1003, ¶263.

l) [1.k]/[8.k] and [1.l/8.l]

Yoakim discloses a beverage machine (FIG4, FIG61) that includes an optical sensor/detector (231) enabled to identify and read an optically detectable identifier (ID4) on a capsule. EX1004, [0025], [0525], [0192], [0477], [0494]-[0496]; EX1003, ¶¶265-267.

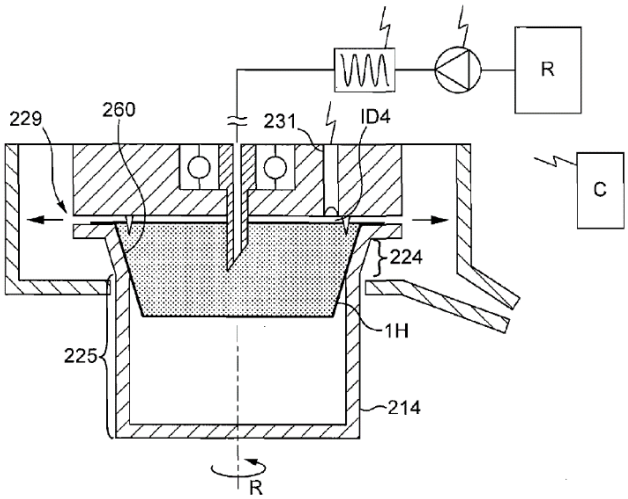

FIG. 61

As discussed above (Section VIII.A.2.j), Rossi discloses the beverage machine's "individualization" process to "individualize" a portion capsule. EX1003, ¶268. Rossi also discloses that its system identifies the capsule using "barcodes, antennae, or paints having ***optically*** measurable properties" that can be read by a "barcode reader, radio frequency wave transmitter and receiver, or ***optical sensor***." *Id.*, EX1041, 11.

Jarisch also discloses an optical code detector (62), designed to read the code positioned on the underside of the flange. EX1005, [0082] ("[T]he light source is placed at the bottom of the centrifugal cell 3. This cell is light conductive allowing the beam to reach the bottom side 72 of its rim 73."); EX1003, ¶¶269-270.

Yoakim discloses a pump that supplies water into the single-serve capsule. EX1004, [0180] (element 6). Yoakim further discloses that the pump is controlled based on the detection of the identifier by the sensor/detector, according to K-fee's

Contentions. EX1004, [0477] ("The capsule system further comprises an identification means associated to the different capsules in the set for identifying each capsule and adjusting brewing parameters accordingly . . . . The identification means are associated to control means . . . by controlling the rotational motor driving the capsule holder or/and the pump supplying liquid in the capsule."), [0025], [0192], [0218], [0522]; EX1003, ¶¶271-272.

It would have been obvious to a POSITA reading Yoakim to only utilize the pump to supply water into the capsule after the identifier is read by the sensor/detector in order to allow the system to process optimal brewing parameters before beginning the brewing process. EX1003, ¶273.

Rossi discloses activating a beverage production cycle only upon reading the identifier by the sensor. EX1041, 6 ("wherein said edible-product making machine ***automatically activates a cycle of production*** of said edible product ***only after having recognised on said load element said identifying element in combination with said validation element as validated***"); 8, 12; EX1003, ¶¶274-276.

It would have been obvious for a POSITA to combine the process of Rossi with Yoakim to arrive at the claimed invention, in order to increase safety of the system by preventing dangerous operating conditions. Section VIII.A.1; EX1003, ¶¶277-278.

m) [1.m]/[8.m]

Yoakim discloses that both the sealing lid and cup-shaped body can include gas barrier layers made of polymers, aluminium and/or aluminium alloys. EX1004, [0128]-[0129], [0197], [0121]; EX1003, ¶279. Yoakim further explains that the capsule has "gas barrier properties and is sealed in a fluid tight manner so that ingress of air in the capsule is prevented." *Id.* [0096]. Yoakim explains that gastight packaging with at least one barrier layer is used "for maintaining the freshness of the substance in the capsule as long as possible." *Id*. [0355], [0350]. Accordingly, a POSITA would have understood that using a barrier layer to prevent the ingress of air and maintain freshness will also prevent moisture or aroma from escaping out of the portion capsule, and additionally it would have been obvious to do so. EX1003, ¶¶280-282; *supra* 4-5.

n) [1.n]/[8.n]

Yoakim discloses a cover attached/sealed to the base element to close the cavity. EX1003, ¶283; EX1004, [0128] ("The capsule can comprise a sealing lid. The sealing lid can comprise a flexible membrane."). Yoakim further discloses that the foil lid is attached to the peripheral rim of the capsule body. *Id.* [0129], [0197], FIGS6-7. Yoakim further discloses that "sealing foil 103 is sealed onto a peripheral rim 104 of the body." EX1004, [0414]; EX1003, ¶¶284-285.

o) [1.o]/[8.o] and [1.p]/[8.p]

Yoakim discloses a cover having a central region and a perimeter. EX1004, [0263], [0128], [0129], [0197], [0414]; FIGS6-7, 26; EX1003, ¶286.

Yoakim renders obvious a cover that is bowed outwardly to a second height at the central region relative to the perimeter. Yoakim discloses that "[t]he sealed capsule is made of materials having gas barrier properties and is ***sealed in a fluid tight manner so that ingress of air in the capsule is prevented***. Furthermore, the capsule ***preferably contains an inert gas that improves the freshness of substance in the capsule***." EX1004, [0121], [0128]-[0129]; EX1003, ¶287. Yoakim further explains that CO2 from the ground coffee can fill free volume inside the sealed capsule. EX1004, [0270]; EX1003, ¶288. A POSITA would have understood that a capsule with a foil membrane cover that is sealed fluid tight and filled with an inert gas would obviously bow upwardly under the pressure of the gas or CO2 emitted from the ground coffee. EX1003, ¶¶289-290, *supra*, 5.

Additionally, Jarisch explicitly discloses a cover that is bowed outwardly to a second height at the central region relative to the perimeter. EX1005, FIG4 (highlighted below); EX1003, ¶291. Jarisch identifies item 60 as the membrane or foil, and depicts it bowed outwardly. EX1005, [0036]. It would have been obvious for a POSITA to utilize a capsule shown in Jarisch with a bowed cover because such a cover can be the result of known techniques, such as inert gas and pressurization,

which preserve the quality of the ingredients over time. EX1003, ¶292.

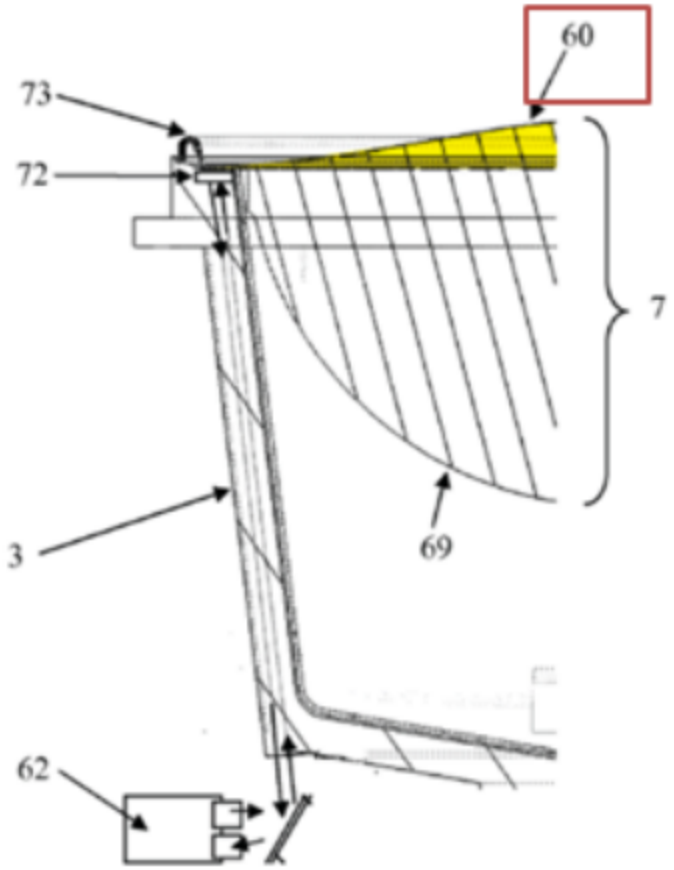

Fig. 4

Jarisch also discloses that the second height of the cover is less than the first height of the base element. EX1005, FIG4. Jarisch discloses a cover that is bowed outwardly in a central region of the cover relative to the perimeter of the cover, which creates a second height as claimed. EX1005, FIG4 (highlighted below); EX1003, ¶293. FIG4 of Jarisch discloses that the the second height of the cover (60) (red arrow) is less than the first height of the base element (69) (green arrow).

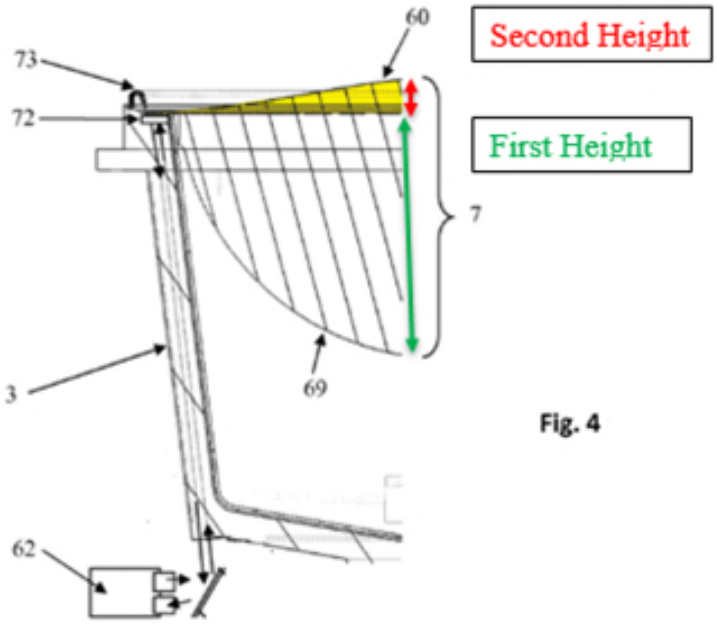

Fig. 4

Yoakim also renders obvious a cover that has a second height at the central region relative to the perimeter, wherein the second height of the cover is less than the first height of the base element. Yoakim renders obvious a cover that is bowed outwardly due to pressurization inside of the capsule. EX1003, ¶¶287-290, 294. Moreover, it would have been obvious to a POSITA for a capsule to have a second height of the cover that is less than the first height of the base element so that the base element has increased space to contain ground coffee to enhance flavor and improve the beverage. EX1003, ¶¶295-296.

p) [1.q]/[8.q]

Yoakim discloses a cover including a piercing region that is configured to be pierced by a mandrel of the beverage machine at a location that is laterally offset

from the central longitudinal axis, according to K-fee's apparent construction. Yoakim discloses that the beverage machine's "lid further comprises outlet piercing elements 51 which are placed on the inside of the lid at a radial position." EX1004, [0186]-[0187], FIG4; EX1003, ¶297. These needles (51), which have "slanted cutting surfaces" are shown in FIG4 (enlarged, below). EX1004, [0435], FIG4; EX1003, ¶¶297-299.

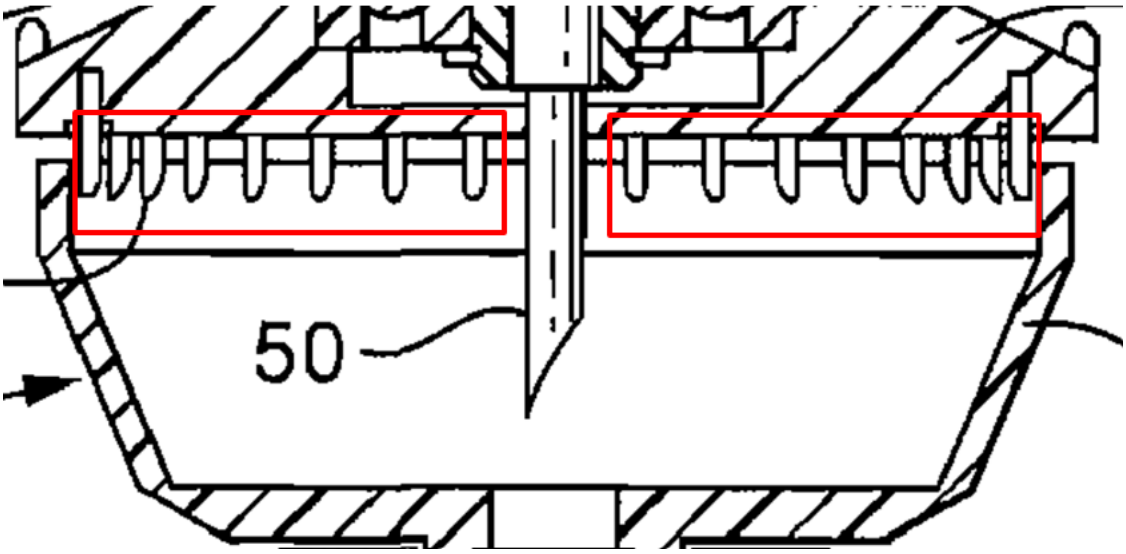

Additionally, FIG7 depicts holes (74) in the membrane of a capsule after having been pierced by the mandrel of the beverage machine at a location that is laterally offset from the central longitudinal axis. EX1004, [0199]; EX1003, ¶¶298-300.

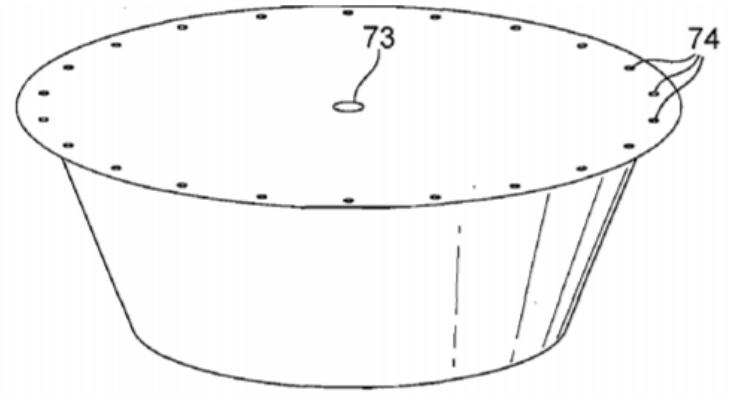

FIG. 7

q) [1.r]/[8.r]

Yoakim discloses a sealing region configured to be sealed against by a seal of the beverage machine that is located between the piercing region and the perimeter of the cover. Yoakim discloses a seal in the form of a "flow restriction means which is arranged after the outlet(s) of the capsule[.]" EX1004, [0370]-[0380], [0382], [0396]-[0398]; EX1003, ¶301-302. Specifically, Yoakim discloses the brewing machine further comprising a sealing valve system 156, which is referred to as an annular engaging portion 157, and can be in the form of a cone or V "for increasing sealing pressure." EX1004, [0388], [0436], [0446]; EX1003, ¶¶303-304. This seal is designed to "control[] the flow of liquid that is discharged from the device." EX1004, [0436], [0384]-[0385]; EX1003, ¶305.

To the extent K-fee repeats its argument from IPR2022-01574, Paper 17, 52, Yoakim discloses a seal under K-fee's Construction at least because its "flow restriction means" is designed "to exert a sufficient ***sealing pressure*** on the capsule."

EX1004, [0388]; EX1003, ¶306. This sealing pressure ***restricts the flow of liquid*** and blocks liquid exit "until a certain pressure" is reached. *Id.*, [0385]; [0436]; EX1003, ¶306. This "***improve[s] the interaction between water and the substance contained in the capsule***," *i.e.*, ensures that water flows through the portion capsule instead of around it. *Id.*, [0251]; EX1003, ¶306.

The seal of the beverage machine is configured to be seal against the sealing region of the capsule. EX1004, [0436] ("The annular engaging portion [seal] includes a pressing peripheral surface 159 which applies a closing force on the peripheral rim 104 of the capsule to be able to restrict the flow of liquid under the force of the elastic loading means."). ***The sealing region is also located between the perimeter of the cover and the region that is pierced by the mandrel***. EX1004, [0388] ("[T]he engaging portion of the valve means can also comprise an annular pressing edge which is arranged to seal on the engaging portion of the capsule."), [0396] ("Preferably, the flow restriction means comprises valve means which is arranged at ***or after at least one outlet of the capsule*** for opening when a certain pressure is exerted thereon by the pressurized liquid for enabling the liquid toe be released from the capsule."); EX1003, ¶307. This is also shown in FIGS35, 37-38, which depicts sealing edge 159 on the surface of the capsule between the peripheral edge and the piercing location of the mandrel (153):

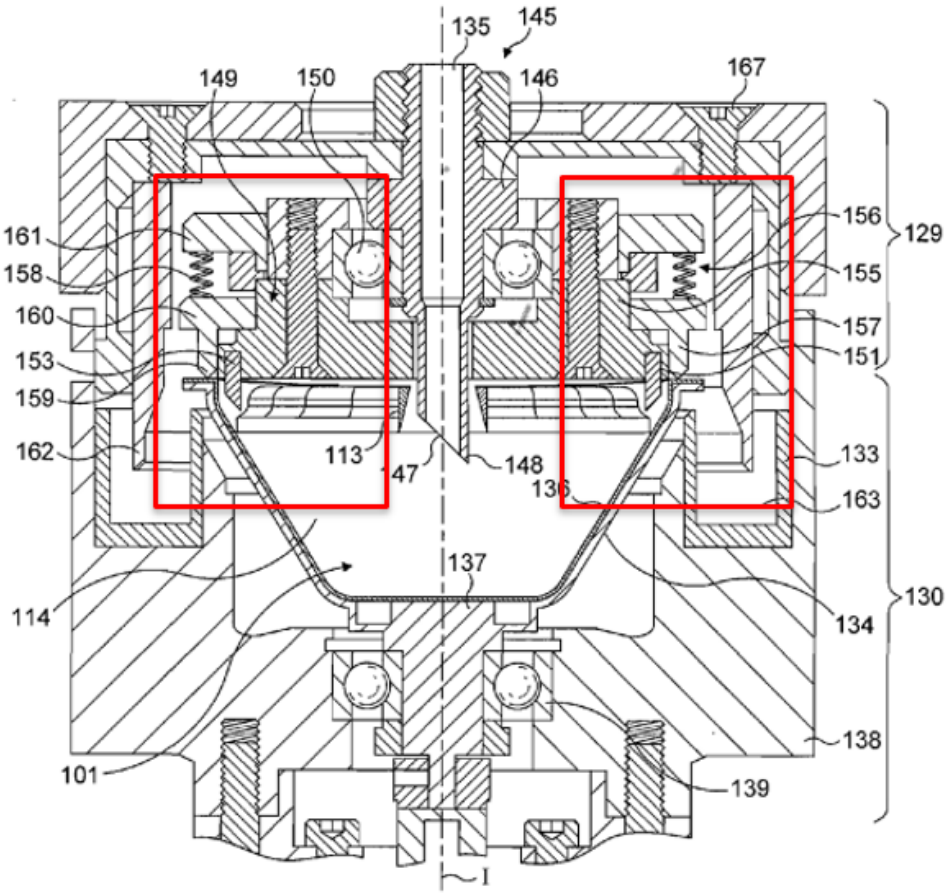

FIG. 35

Additionally, it would have been obvious to a POSITA to utilize a seal in the claimed position in order to improve interaction between the water and coffee grounds. EX1003, ¶¶308-309.

3. Claim 2

Yoakim discloses that its capsule can be made of metal, a biodegradable material, or plastic. EX1004, [0237] ("**The capsule may be made of** materials such as **plastics**, **aluminium**, cellulose-based materials or other **biodegradable materials**, and combinations thereof [sic]."); [0180], [0427], [0215], [0461], [0197],

[0414]; EX1003, ¶311. It would also have been obvious to a POSITA, as these were known capsule materials at the time of the invention. EX1003, ¶312.

Yoakim in view of Rossi and Jarisch disclose and/or renders obvious an optically detectable individualization identifier (claims [1.i]/[8.i]) that is located both on the capsule's bottom rim, and also located on the wall of the base element, according to K-fee's apparent interpretation. Jarisch discloses that the optically detectable individualization identifier can also be included on the wall of the base element, in addition to the bottom of the rim. EX1005, [0022] ("In another embodiment, the code is present on the rim of the capsule. In the most preferred embodiment, the code is present on the bottom of the rim of the capsule which is opposed to the lid of the capsule."), [0037] ("[T]he code is located on the body . . . close to the peripheral edge of the capsule."); EX1003, ¶¶313-314.

Furthermore, it would have been obvious to a POSITA to utilize an optically detectable individualization identifier both on the bottom rim and on the wall of the capsule to provide an alternative location to read the code in order to increase the chances of the code being read. EX1003, ¶315.

Jarisch also discloses a portion capsule wherein the individualization identifier (according to K-fee's Contentions) is circumferentially arranged around the central longitudinal axis. EX1005, [0016] ("[T]he capsule has a ***circumference wherein the code is arranged on the container*** along an arc-shaped or circular path

of the circumference."); [0016] ("In order to ensure a reliable reading or retrieval of information, ***the code is repeated along said circumference***."); [0015], [0037], [0039], [0043], [0066]; EX1003, ¶316.

Furthermore, it would have been obvious to a POSITA to utilize an the individualization identifier circumferentially arranged around the central longitudinal axis given the centrifugal functioning of single-serve brewing machines as well as to increase the chances of the code being read. EX1003, ¶317.

4. Claim 4

Yoakim discloses a cover connected to the top surface of the rim. Section VIII.A.2.(n); EX1003, ¶¶319-321.

5. Claim 5

Yoakim discloses a portion capsule wherein the closed bottom portion comprises an indentation. Yoakim discloses that the closed bottom portion may be indented, explaining that "***[t]he lower portion can be*** convex, flat or ***concave***." EX1004, [0471]-[0473]; EX1003, ¶323. The base element 106 comprising a bottom is seen opposing flange 104 in FIG27. It would also have been an obvious design choice to include a lower portion of the capsule that is concave, for example in order to facilitate movement of the coffee grounds towards the perimeter of the inner capsule wall during centrifugal extraction, or to stiffen the bottom of the capsule to better resist distortion due to pressurization. EX1003, ¶¶324-325.

6. Claim 6

Yoakim discloses a portion capsule that includes a filter inside the cavity. EX1004, [0461]-[0462], [0343], [0131], [0171], [0255], [0271], FIG42-43 and 45-47. Yoakim expressly discloses that "the capsule may comprise a filter part 708 delimiting the cavity 709 for the substance and a collecting recess 710 peripherally placed relative to the central cavity." *Id*.,[0462] ("In addition, a filter part 807 can be provided in the capsule which also delimits a cavity 808 for receiving the substance and a collecting recess 809 for the centrifuged liquid. . . . . The filter part can be made of moulded plastic or of a more complex structure such as a combination of a plastic support frame and a porous filter membrane."); EX1003, ¶¶327-328. It would have been obvious to utilize a filter inside of the cavity as an obvious design choice, and in order to improve the quality of the beverage by preventing loose coffee grounds from entering the user's cup. EX1003, ¶329; EX1004, [0424].

7. Claim 7

Yoakim discloses a capsule with a base element that does not include a filter inside of the cavity, and expressly confirms that a filter is optional. EX1004, [0171] ("An additional filtering layer can be used. . . ."), [0343] (disclosing optional filter embodiment), [0255], [0288], [0300]; EX1003, ¶¶332-333. As depicted in FIG54, Yoakim expressly discloses embodiments using capsules without a filter in the base

element cavity. EX1004, FIG54; EX1003, ¶¶332-333. As depicted in FIGS6-7, 54-60, and described in [0197]-[0199], Yoakim expressly discloses embodiments using capsules that do not have a filter. EX1003, ¶¶334-335. It would also have been obvious design choice to a person of ordinary skill in the art to not use a filter in a centrifuge based brewing system, in order to simplify the capsule design. *Id.*

B. Ground 2: Claims 3 and 8-12 Would Have Been Obvious Over Yoakim in view of Jarisch in view of Rossi in Further view of Rapparini

1. Motivation to Combine Rapparini

As demonstrated above, a POSITA would have been motived to combine Yoakim, Jarisch, and Rossi to predictably arrive at the ’830 Patent claims. *See* Section VIII.A.1. A POSTIA would have also been motived to combine Yoakim, Jarisch, Rossi, and Rapparini to arrive at the ‘830 Patent claims.

Rapparini is analogous art in the field of portion capsule beverage extraction, disclosing an invention that may be applied in automatic coffee/espresso machines. EX1008, [0001], [0008]-[0024], [0067]; EX1003, ¶¶336-338. Rapparini is designed with longitudinal ribs and grooves to optimize “the stability of the container” and to improve “the stability and rigidity of the system.” EX1008, [0009]. A POSITA would thus find it obvious to combine the portion capsule and brewing systems of Yoakim, Jarisch, and Rossi with the longitudinal ribs and grooves of Rapparini for the predictable benefit of greater stability of the capsule body wall. EX1003, ¶339.

Rapparini discloses longitudinal grooves in the body of the capsule wall and corresponding ribs in the inner cavity, thus increasing stability of the capsule. EX1008, [0009]. This was a widely known technique in the art by 2010, so a POSITA would have recognized that using longitudinal grooves and ribs to stiffen a thin-walled capsule would lead to greater stability. EX1003, ¶340. Rapparini further provides express motivation to use its capsule configuration by stating "[t]he presence of ribs having different lengths on the body of the container allows the optimization of the stability of the container. The modulation of the length of the ribs along the surface of the container allows improving the stability and rigidity of the system." EX1008, [0009]; EX1003, ¶340.

Rapparini further states its invention can be applied to other capsule materials (which includes metal), in addition to other dimensions, and can be employed for use in automated espresso machines (like the systems of Yoakim and Jarisch). EX1008, [0067]; EX1003, ¶341. A POSITA would have been motivated to use Rapparini's configuration because Rapparini "guarantees stability of the structure of filtering and permeable containers," and a POSITA would find it obvious to apply this to impermeable structures as well. EX1008, [0007]; EX1003, ¶341.

A POSITA would also have an expectation of success when combining Rapparini's grooves and ribs and the capsules disclosed in Yoakim and Jarisch. As depicted below, all systems disclose similarly-shaped capsules. EX1003, ¶342.

Yoakim	Jarisch	Rapparini
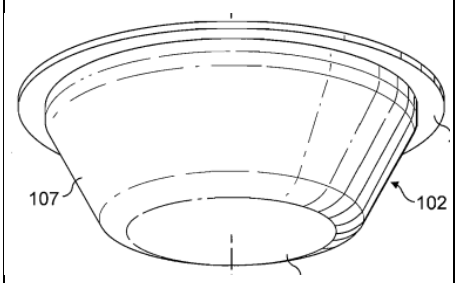	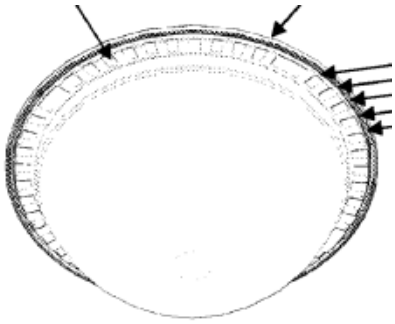	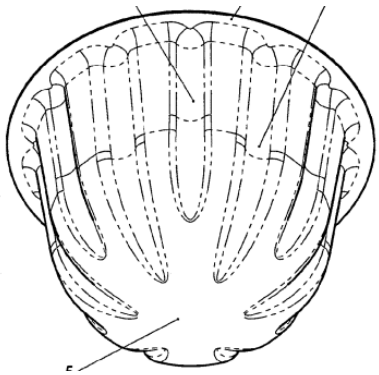

See, e.g., EX1004, FIG27; EX1005, FIG7; EX1008, FIG6 bis; EX1003, ¶342.

Furthermore, Yoakim already contemplates a capsule using a textured body, such as the grooves and ribs disclosed by Rapparini, which Yoakim explains can be used to engage the capsule in the centrifugal brewing system. EX1004, [0215] ("The toothed structure comprises a series of teeth which is positioned below the edge or rim 72 of the body of the capsule. The teeth are placed along the whole periphery of the body of the capsule . . . . It should be noticed that the teeth could be replaced by other equivalent structures such as series of elements in relief and/or hollow. For example, slits, pins or small needles can be envisaged."); EX1003, ¶341.

Finally, a POSITA would expect success because Rapparini's capsule is manufactured using a thermoforming process similar to Yoakim's deep-drawing process. *Compare* EX1008, [0010] ("[T]he container being made by means of

thermoforming") *with* EX1004, [0215] ("For example, it can be moulded by injection of plastic or deep drawn in aluminum."); EX1003, ¶343.

It would therefore be obvious to a POSITA to combine the brewing/capsule system of Yoakim with the code location of Jarisch, the capsule recognition process of Rossi, and the ribs and grooves of Rapparini. EX1003, ¶344. Accordingly, it would have been obvious to a POSITA to combine the teachings of Yoakim, Jarisch, Rapparini, and Rossi to arrive at the '830 claimed invention. *Id.*

2. Claim 3

Rapparini discloses a plurality of "vertically oriented" indentations/grooves arranged on the outside surface of the wall. Rapparini explains these grooves, which are located on the outer wall region of base element, may have varying lengths, including short ribs "extending only along the side region of the container." EX1008, [0007]-[0011]; EX1003, ¶¶347-348. Rapparini's grooves (4) are "vertically oriented" as shown below. FIGS6, 6bis (annotated); EX1003, ¶349. Furthermore, it would have been obvious to a POSITA to configure vertically oriented indentations/grooves on the body of the capsule wall because it was well-known to provide structural stability. *Supra* Section VIII.B.1; EX1003, ¶350; *see also* EX1030, 1:14-21; EX1031, 1:27-37; EX1032, 5:10-25; EX1033, 2:20-25; EX1011, [0077]; EX1034, [0009]; EX1035, [0027], [0037]; EX1008, [0009].

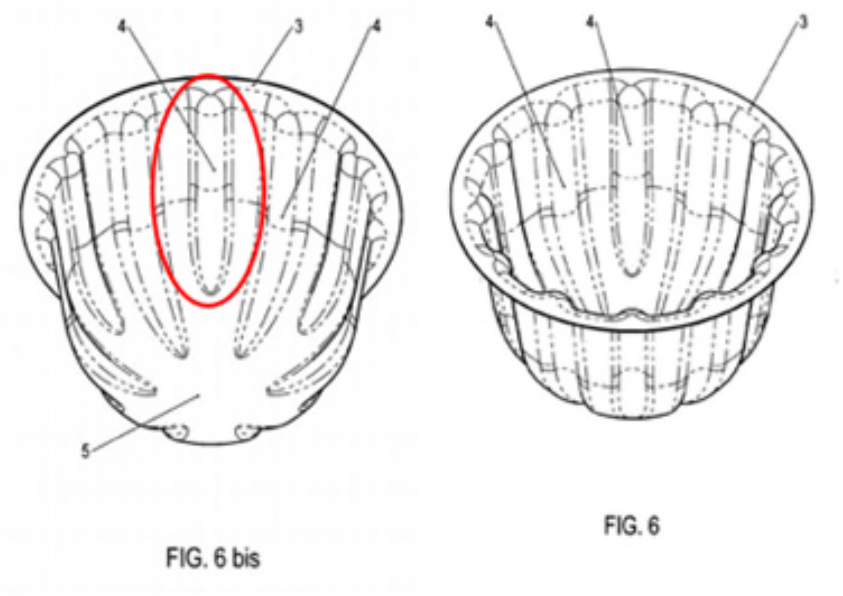

Additionally, Rapparini discloses ribs that are "vertically oriented" on the inside surface of the wall of the base element. These ribs are visible in the cavity at (4) in FIG6 (above). Rapparini discloses that the ribs provide an optimized capsule structure that is stiffer and more stable. EX1008, [0009] ("[T]he body of the container with ***longitudinal stiffening ribs wherein the length of the ribs is variable along the surface of the body***."), [0007], [0053]-[0054]; EX1003, ¶351.

A POSITA would further understand that Rapparini discloses this feature because, on a thin-walled structure, the indentations/grooves on the outside wall of the capsule body would form corresponding ribs on the inside surface of the capsule's wall. EX1003, ¶352.

A POSITA would have been motivated to utilize the grooves/ribs of Rapparini in combination with the capsules and concepts of Yoakim. Section VIII.B.1; EX1003, ¶¶347-353.

3. Claim 8

Yoakim, Jarisch and Rossi render nearly all elements of claim 8 obvious. Elements [8.a]-[8.e] and [8.h]-[8.r] are discussed with claim 1 (Section VIII.A.2.a-q). Elements [8.f]-[8.g] are discussed below. EX1003, ¶355.

4. [8.f]/[8.g]

Rapparini discloses the features of [8.f]-[8.g] as shown in Claim 3/Section VIII.B.2. EX1003, ¶¶358-359.

5. Claim 9

Yoakim discloses a portion capsule wherein the inside surface of the wall comprises a ledge projecting towards the central longitudinal axis as shown in [1.g]/Section VIII.A.2.(h). EX1003, ¶362. Furthermore, Yoakim, Jarisch and Rossi disclose an optically detectable individualization identifier that is circumferentially arranged around the central longitudinal axis as shown in Claim 2/Section VIII.A.3. EX1003, ¶¶363-364.

6. Claim 10

Yoakim, Rossi, Jarisch and Rapparini render claim 10 obvious as shown in Claim 2/Section VIII.A.3. EX1003, ¶¶366-369.

7. Claim 11

Yoakim, Jarisch, Rossi and Rapparini render claim 11 obvious. Yoakim explicitly discloses a portion capsule that includes a filter inside of the cavity as shown in Claim 6/Section VIII.A.6.

Yoakim discloses that the wall of the base element may be comprised, including partially, of an electrically conductive metal, such as aluminum, which forms an electrically conductive section under K-Fee's Contentions. EX1004, [0128]-[0129]; [0215]; EX1003, ¶373.Aluminum is known to be an excellent electrical conductor, and it has been acknowledged that an aluminum capsule is electrically conductive. EX1003, ¶373; EX1044, [0044]-[0045].

Yoakim further discloses that its recognition means can be "a magnetic element." EX1004, [0496]. It would have been obvious to a POSITA to incorporate a portion of the capsule to include a section of electrically conductive material, as a aluminum as a recognition means. EX1003, ¶374. For example, it would have been obvious to include an electrically conductive section on the capsule to serve as a capsule recognition means as contemplated by the Yoakim system. EX1004, [0496]; EX1003, ¶¶374-375.

8. Claim 12

Yoakim, Jarisch, Rossi and Rapparini render claim 12 obvious. Yoakim explicitly discloses a portion capsule that is free of a filter (Claim 7/Section VIII.A.7)

and a wall comprised of an electrically conductive section (Claim 11/Section VIII.B.7). EX1003, ¶¶377-380.

IX. DENIAL UNDER §325(d) IS INAPPROPRIATE

The Board employs a two-part test for §325(d). *Advanced Bionics, LLC v. MED-EL Elektromedizinische Geräte GmbH*, IPR2019-01469, Paper 6 (PTAB Feb. 13, 2020) (precedential).

A. Part 1

The prior art was all cited, directly or indirectly, in IDSs containing over 700 references. However, analysis under Part 1 is not necessary because, as detailed below, Part 2 does not support §325(d) denial because the Examiner materially erred in allowing the '830 claims just as the Board found in related patents—IPR2022-01574, IPR2023-00502, and IPR2023-00485. Indeed, the Examiner materially erred as he never saw the Institution Decisions from these proceedings that rejected K-fee's arguments and credited Petitioner's combinations.

B. Part 2

The Examiner committed material errors by "misapprehending or overlooking specific teachings in the relevant prior art" that, had they been properly considered, would have led the Examiner to conclude that the challenged claims are unpatentable. *Advanced Bionics*, 8 n.9, 10.

Factor (c) weighs against discretionary denial because none of the Petition

art was the basis of any rejection. *Trend Micro Inc. v. Cupp Comput. AS*, IPR2021-00813, Paper 7, 23 (PTAB Oct. 25, 2021) (factor (c) "strongly favors not exercising . . . discretion" where IDS reference does not form basis for rejection).

In the first/only Office Action (EX1002, 185-201), the only prior art rejections involved provisional nonstatutory double patenting rejections over the '829 Patent application (which terminally disclaims the '094 Patent, which terminally disclaims the patent reviewed in IPR20222-01574). ***The Examiner never rejected any claim based on any of the references presented in this Petition***. *Lyft, Inc., v. Rideshare Displays, Inc.*, IPR2021-01602, Paper 7, 14-15 (PTAB Apr. 11, 2022).

After an Interview (EX1002, 339-340), terminal disclaimer (*id.* 347), minor claim amendments, and a priority argument (*id.* 350-359), the Examiner allowed the claims providing Reasons for Allowance. *See* EX1002, 377-379.

In arriving at this conclusion, the Examiner did not cite/discuss the disclosures of Yoakim, Jarisch, Rossi, or Rapparini. *Id.* If anything, the Examiner appears to have not considered Jarisch since he incorrectly granted Applicant priority to its foreign applications. Accordingly, to the extent the asserted *combination* of prior art references was evaluated during '830 prosecution (it was not), such evaluation was *minimal* at best. Thus, this factor weighs against exercising discretion to deny institution.

Although different Examiners used Rossi,[7] and Jarisch[8] at times during

---

[7] A different Examiner used Rossi in Appl. 16/538,752, but for claims that did ***not*** include limitations requiring "an optically detectable individualization identifier, which is carried by the bottom surface of the rim" which "which "is configured to be read by a sensor/detector of a beverage machine to ***individualize*** the portion capsule ***and*** to activate a pump of the beverage machine." In response, Applicant twice added further claim limitations (EX1065, 2-7; EX1066, 2-3) and never disputed the Examiner's use of Rossi, and instead argued that other limitations provided reasons for allowance.

[8] During examination of Appl. 16/860,441, the Examiner stated that Jarisch discloses that it was "well established" to place optical codes "on the bottom side of the flange of a portion capsule…" (EX1062, 15). Applicant never once argued that Jarisch fails to meet this limitation, and added other limitations to "further differentiate from the reference relied upon by the Examiner. EX1063, 16-17. During examination of 16/538,752, Applicant did not dispute the Examiner's reliance upon Jarisch (EX1064, 8), and instead amended its claims to recite additional limitations using multiple capsules with multiple codes. EX1065, 2-3, 10. Applicant never argued that Jarisch fails to disclose the claimed feature, and instead further amended its claims. EX1066, 20-21. Thus, the Office has never

prosecution of distant related applications, those claims did not include the current language requiring "an optically detectable individualization identifier, which is carried by the bottom surface of the rim" which "is configured to be read by a sensor/detector of a beverage machine to ***individualize*** the portion capsule ***and*** to activate a pump of the beverage machine."

Factor (e) weighs against discretionary denial. The Examiner materially erred by overlooking the specific prior art disclosures relating to at least the limitations identified by the Examiner. The Examiner never discussed the references in this Petition, which explicitly negate the Reasons for Allowance. The Examiner also failed to utilize Jarisch in a rejection after improperly granting Applicant priority to its foreign filings—which is error. IPR2022-01574, Paper 12, 17-27; IPR2023-00485, Paper 9, 9-18.

This Petition cures all of the Examiner's errors and demonstrates why the challenged claims are unpatentable. Specifically, as explained above (Sections VIII.A.2.a-9, VIII.A.3-7,VIII.B.2-8), the Petition identifies where the prior art teaches or suggests every limitation of the challenged claims. Petitioner also explains why a POSITA would have combined the various disclosures of the cited

---

stated on record that Jarisch fails to disclose a code under the bottom surface of the rim, which weighs against exercising 325(d) discretion.

references to arrive at the subject matter of the claims. (Sections VIII.A.1; VIII.B.1).

The Examiner erred because each feature allegedly missing from the prior art is disclosed by cited references. (EX1003, ¶¶142-148):

Reasons for Allowance	Petition
the rim having a top surface and an opposing bottom surface	Section VIII.A.2.i; EX1003, ¶¶246-249.
an optically detectable individualization identifier, which is carried by the bottom surface of the rim	Section VIII.A.2.j; EX1003, ¶¶250-260.
the optically detectable individualization identifier includes surface areas having different optically detectable reflective properties	Section VIII.A.2.k; EX1003, ¶¶261-264.
the optically detectable individualization identifier is configured to be read by a sensor/detector of a beverage machine to individualize the portion capsule and to activate a pump of the beverage machine	Section VIII.A.2.l; EX1003, ¶¶265-278.
a plurality of vertically-orientated indentations arranged on the outside surface of the wall	Section VIII.A.2.g; VIII.B.4; EX1003, ¶¶236-240, 355-359.
a plurality of vertically-orientated ribs arranged on the inside surface of the wall	Section VIII.B.2; VIII.B.4; EX1003, ¶¶347-359

Thus, based on these references, supported by the testimony of Michael Jobin, "reasonable minds cannot disagree that the Office erred in a manner material to patentability in its treatment of the art by failing to reject the claims … over the references cited in Petitioner's challenges. *Apple, Inc. v. Omni MedSci, Inc.*, IPR2020-00029, Paper 7, 55 (PTAB Apr. 22, 2020). None of the Petition references

should form the basis for discretionary denial because they unequivocally teach the limitations in question and demonstrate material error. *Apple v. Koss Corp.*, IPR2021-00381, Paper 15, 29 (PTAB Jul. 2, 2021).

Because the prior art combinations in the Petition explicitly negate the Examiner's Reasons for Allowance, the Examiner materially erred by misapprehending or overlooking their respective disclosures. *3Shape A/S and 3Shape Inc., v. Align Tech., Inc.*, IPR2021-01323, Paper 16, 12 (PTAB Jan. 31, 2022); *Viken Detection Corp. v. Am. Sci. and Eng. Inc.*, IPR2021-01585, Paper 11, 13-14 (PTAB May 5, 2022). Thus, Factor (e) weighs against discretionary denial.

Factor (f) weighs against discretionary denial. This Petition is supported by the Jobin declaration (EX1003), which provides new analysis as to why K-fee is not entitled to foreign priority (*Id.*, ¶¶154-182).

The prior art renders obvious the Challenged Claims and the strength of the Petition alone supports the Board not exercising its discretion under §325(d). *Apple, Inc. v. Omni MedSci, Inc.*, IPR2020-00029, Paper 7, 55 (PTAB Apr. 22, 2020).

X. DENIAL UNDER *NHK/FINTIV* IS ALSO INAPPROPRIATE

Factor 1 weighs against denial or is at least neutral: The co-pending litigation is in its early stages. And while a stay has not been granted, Petitioner intends to move for a stay pre-institution, and if denied, will renew its motion if the IPRs are instituted. Here, IPRs are being filed on all asserted patents and Judge Wu

has granted stays pending IPR even where a claim construction order has already been issued. *Vivint, Inc. v. SkyBell Technologies, Inc.*, 2022 WL 18587113 (C.D. Cal. Nov. 10, 2022).

Factor Two weighs against denial: Trial will likely occur "after the projected statutory deadline for the PTAB's final written decision." Interim Procedure, 9. The current case schedule concludes with the Markman hearing and thus ***no trial date has been set***. The median time to trial in this district is approximately 28 months. EX1057, 68. For Judge Wu and patent cases in this district, average approximately 33 months to trial (roughly September 2025). EX1058. Thus, it is more likely that the trial will occur long after conclusion of this IPR. [9]

Factor Three weighs against denial: Investment in the case has not been significant. Motion practice has been minimal and discovery is in its early stages.

[9] Interim Fintiv Guidance notes that "when analyzing the proximity of the court's trial date under factor two of Fintiv, when other relevant factors weigh against exercising discretion to deny institution or are neutral, the proximity to trial should not alone outweigh all of those other factors." USPTO Memorandum, Interim Procedure for Discretionary Denials in AIA Post-Grant Proceedings with Parallel District Court Litigation, 8 (June 21, 2022).

The parties are engaged in claim construction with the *Markman* hearing scheduled in January 2024. Petitioner was also diligent to file these IPRs within approximately two months of the PTAB instituting IPRs addressing similar issues, including on §325(d) issues. IPR2023-00502; IPR2023-00485.

Factor Four is neutral: There may be little to no substantive overlap if a stayed is granted.

Factor Five is neutral: The parties are the same.

Factor Six strongly weighs against denial: Finally, as evidenced by related IPR institutions (IPR2022-01574, IPR2023-00502, IPR2023-00485) the merits of the Petition are compelling and strongly weigh against denial by clearly showing the unpatentability of the claims, including the limitations the Examiner cited as lacking in the prior art.

Thus, §314(a) denial under *Fintiv* is inappropriate.

XI. MANDATORY NOTICES PURSUANT TO 37 C.F.R. §42.8

A. Real Parties-In-Interest under 37 C.F.R. §42.8(b)(1).

Nestlé USA, Inc., Nestlé Nespresso SA, and Société Des Produits Nestlé SA are real parties-in-interest with Petitioner.

B. Related Matters Under 37 C.F.R. §42.8(b)(2).

Nespresso USA, Inc. is seeking declaratory judgment that it does not infringe the ’830 Patent in *Nespresso USA, Inc. v. K-Fee System GmbH*, Case No. 2:22-cv-09295-GW (C.D. Cal.).

C. Lead and Back-up Counsel under 37 C.F.R. §42.8(b)(3).

B. Clayton McCraw (Lead counsel) Registration No. 68,258 MAYER BROWN LLP 1221 Avenue of the Americas New York, NY 10020-1001 Telephone: (212) 506-2649 CMcCraw@mayerbrown.com	Amanda S. Bonner (Back-up Counsel) Registration No. 65,224 MAYER BROWN LLP 71 South Wacker Drive Chicago, IL 60606 Telephone: (312) 701-8645 Facsimile: 312-701-7711 asbonner@mayerbrown.com

D. Service Information under 37 C.F.R. §42.8(b)(4).

Please direct all correspondence to lead counsel at the address identified above. Petitioner consents to electronic service on counsel of record.

XII. GROUNDS FOR STANDING

Petitioner certifies that the ’830 Patent is available for *inter partes* review and that Petitioner is not barred or estopped from requesting an *inter partes* review of the ’830 Patent. 37 C.F.R. §42.104(a).

XIII. PAYMENT OF FEES

A fee of $41,500 charged to Deposit Account 130019 was paid with the filing this petition. 37 C.F.R. §§42.15(a), 42.103. Should any further fees be required by the present Petition, the Board is hereby authorized to charge the above-referenced Deposit Account.

XIV. STATEMENT OF PRECISE RELIEF REQUESTED

Petitioner requests IPR and cancellation of claims 1-12 because they are unpatentable under 35 U.S.C. §103 based on the foregoing grounds.

Date: February 12, 2024

Respectfully submitted,

By:/ B. Clayton McCraw /
B. Clayton McCraw
Registration No. 68,258
MAYER BROWN LLP
1221 Avenue of the Americas
New York, NY 10020-1001
Telephone: (212) 506-2649
CMcCraw@mayerbrown.com

Amanda Streff Bonner
Registration No. 65,224
MAYER BROWN LLP
71 S. Wacker Drive
Chicago, IL 60606
Telephone: 312-701-8645
Facsimile: 312-701-7711
asbonner@mayerbrown.com

Counsel for Petitioner

CERTIFICATE OF SERVICE

Pursuant to 37 C.F.R. §§42.6 and 42.105, I hereby certify that on February 12, 2024, a copy of the attached CORRECTED PETITION FOR INTER PARTES REVIEW OF U.S. PATENT NO. 11,465,830, together with all exhibits, and all other papers filed therewith, including a Power of Attorney on behalf of Petitioners, was served via Priority Mail Express on the attorneys of record for the patent owner at the following address:

Attorney of Record for Patent Owner

The Dobrusin Law Firm P.C. (Customer No 25215)
29 W. Lawrence Street
Suite 210
Pontiac MI 48342

Date: February 12, 2024

Respectfully submitted,

By:/ B. Clayton McCraw/

B. Clayton McCraw
Registration No. 68,258
MAYER BROWN LLP
1221 Avenue of the Americas
New York, NY 10020-1001
Telephone: (212) 506-2649
CMcCraw@mayerbrown.com

Amanda Streff Bonner
Registration No. 65,224
MAYER BROWN LLP
71 S. Wacker Drive
Chicago, IL 60606
Telephone: 312-701-8645
Facsimile: 312-701-7711

asbonner@mayerbrown.com

Counsel for Petitioner

CERTIFICATION PURSUANT TO 37 C.F.R. § 42.11

Pursuant 37 C.F.R. § 42.11, the undersigned certifies that this CORRECTED PETITION FOR INTER PARTES REVIEW OF U.S. PATENT NO. 11,465,830, and accompanying evidence are not being presented for an improper purpose and that all legal contentions, allegations, and denials are warranted and have evidentiary support.

Date: February 12, 2024

Respectfully submitted,

By:/ B. Clayton McCraw/

B. Clayton McCraw
Registration No. 68,258
MAYER BROWN LLP
1221 Avenue of the Americas
New York, NY 10020-1001
Telephone: (212) 506-2649
CMcCraw@mayerbrown.com

Amanda Streff Bonner
Registration No. 65,224
MAYER BROWN LLP
71 S. Wacker Drive
Chicago, IL 60606
Telephone: 312-701-8645
Facsimile: 312-701-7711
asbonner@mayerbrown.com

Counsel for Petitioner

CERTIFICATION PURSUANT TO 37 C.F.R. § 42.24(d)

Pursuant to 37 C.F.R. § 42.24(d), the undersigned certifies that this CORRECTED PETITION FOR INTER PARTES REVIEW OF U.S. PATENT NO. 11,465,830, complies with the type-volume limitation of 37 C.F.R. § 42.24(a). The word count application of the word processing program used to prepare this paper states that the paper contains 13,993/14,000 words, excluding the parts of the paper exempted by 37 C.F.R. §§ 42.24(a)(1).

Date: February 12, 2024

Respectfully submitted,

By:/ B. Clayton McCraw/

B. Clayton McCraw
Registration No. 68,258
MAYER BROWN LLP
1221 Avenue of the Americas
New York, NY 10020-1001
Telephone: (212) 506-2649
CMcCraw@mayerbrown.com

Amanda Streff Bonner
Registration No. 65,224
MAYER BROWN LLP
71 S. Wacker Drive
Chicago, IL 60606
Telephone: 312-701-8645
Facsimile: 312-701-7711
asbonner@mayerbrown.com

Counsel for Petitioner

CLAIM LISTING APPENDIX

1.	A portion capsule for making a beverage comprising
[1.a]	a base element having a cavity in which a beverage material is provided
[1.b]	the base element including a wall that is symmetrical about a central longitudinal axis thereof
[1.c]	and having an open end and a closed bottom portion
[1.d]	the base element has a first height that is defined between the open end and the closed bottom portion and
[1.e]	the wall has an outside surface and an inside surface which faces the beverage material
[1.f]	a plurality of indentations arranged on the outside surface of the wall, about the central longitudinal axis
[1.g]	a ledge formed at the inside surface of the wall and projecting towards the central longitudinal axis, the ledge is spaced below the open end of the base element
[1.h]	a rim at the open end of the base element, the rim having a top surface and an opposing bottom surface
[1.i]	an optically detectable individualization identifier, which is carried by the bottom surface of the rim
[1.j]	the optically detectable individualization identifier includes surface areas having different optically detectable reflective properties
[1.k]	the optically detectable individualization identifier is configured to be read by a sensor/detector of a beverage machine to individualize the portion capsule
[1.l]	and to activate a pump of the beverage machine
[1.m]	a barrier layer to prevent moisture or aroma from escaping out of the portion capsule; and
[1.n]	a cover attached to the base element to close the cavity
[1.o]	the cover having a central region and a perimeter, the cover is bowed outwardly to a second height in the central region relative to the perimeter of the cover
[1.p]	the second height of the cover is less than the first height of the base element
[1.q]	the cover includes a piercing region that is configured to be pierced by a mandrel of the beverage machine at a location that is laterally offset from the central longitudinal axis and

[1.r]	a sealing region that is configured to be sealed against by a seal of the beverage machine, the sealing region is located between the piercing region and the perimeter of the cover
2	The portion capsule according to claim 1, wherein the base element is made of metal, a biodegradable material, or plastic, the optically detectable individualization identifier is located on the wall of the base element, and the individualization identifier is circumferentially arranged around the central longitudinal axis.
3	The portion capsule according to claim 2, wherein the plurality of indentations are vertically oriented, the inside surface of the wall of the base element comprises a plurality of ribs.
4	The portion capsule according to claim 2, wherein the cover is connected to the top surface of the rim.
5	The portion capsule according to claim 4, wherein the closed bottom portion comprises an indentation.
6	The portion capsule according to claim 4, wherein the portion capsule includes a filter inside of the cavity.
7	The portion capsule according to claim 4, wherein the portion capsule is free of a filter inside of the cavity.
8.	A portion capsule for making a beverage comprising
[8.a]	a base element having a cavity in which a beverage material is provided
[8.b]	the base element including a wall that is symmetrical about a central longitudinal axis thereof
[8.c]	and having an open end and a closed bottom portion
[8.d]	the base element has a first height that is defined between the open end and the closed bottom portion and
[8.e]	the wall has an outside surface and an inside surface which faces the beverage material
[8.f]	a plurality of vertically-orientated indentations arranged on the outside surface of the wall
[8.g]	a plurality of vertically-orientated ribs arranged on the inside surface of the wall
[8.h]	a rim at the open end of the base element, the rim having a top surface and an opposing bottom surface
[8.i]	an optically detectable individualization identifier, which is carried by the bottom surface of the rim
[8.j]	the optically detectable individualization identifier includes surface areas having different optically detectable reflective properties

[8.k]	the optically detectable individualization identifier is configured to be read by a sensor/detector of a beverage machine to individualize the portion capsule
[8.l]	and to activate a pump of the beverage machine
[8.m]	a barrier layer to prevent moisture or aroma from escaping out of the portion capsule; and
[8.n]	a cover sealed to the base element to close the cavity
[8.o]	the cover having a central region and a perimeter, the cover is bowed outwardly to a second height in the central region relative to the perimeter of the cover
[8.p]	the second height of the cover is less than the first height of the base element
[8.q]	the cover includes a piercing region that is configured to be pierced by a mandrel of the beverage machine at a location that is laterally offset from the central longitudinal axis and
[8.r]	a sealing region that is configured to be sealed against by a seal of the beverage machine, the sealing region is located between the piercing region and the perimeter of the cover.
9	The portion capsule according to claim 8, wherein the inside surface of the wall comprises a ledge projecting towards the central longitudinal axis, and the optically detectable individualization identifier is circumferentially arranged around the central longitudinal axis.
10	The portion capsule according to claim 9, wherein the optically detectable individualization identifier is located on the wall of the base element, and the base element is made of metal, a biodegradable material, or plastic.
11	The portion capsule according to claim 10, wherein the portion capsule includes a filter inside of the cavity, and the wall comprises an electrically conductive section.
12	The portion capsule according to claim 10, wherein the portion capsule is free of a filter inside of the cavity, and the wall comprises an electrically conductive section.