(12) INTERNATIONAL APPLICATION PUBLISHED UNDER THE PATENT COOPERATION TREATY (PCT)

(19) World Intellectual Property Organization
International Bureau

(43) International Publication Date
11 December 2008 (11.12.2008)

PCT

(10) International Publication Number
WO 2008/148646 A1

(51) International Patent Classification:
A47J 31/22 (2006.01) *A47J 31/06* (2006.01)

(21) International Application Number:
PCT/EP2008/056310

(22) International Filing Date: 22 May 2008 (22.05.2008)

(25) Filing Language: English

(26) Publication Language: English

(30) Priority Data:
07109579.8 5 June 2007 (05.06.2007) EP
08102147.9 29 February 2008 (29.02.2008) EP

(71) Applicant *(for all designated States except US)*: **NESTEC S.A.** [CH/CH]; Avenue Nestlé 55, CH-1800 Vevey (CH).

(72) Inventors; and

(75) Inventors/Applicants *(for US only)*: **YOAKIM, Alfred** [CH/CH]; Ch. de la Routiaz 2, CH-1806 St-Legier-la Chiesaz (CH). **DENISART, Jean-Paul** [FR/CH]; Ch. de la Jaque 15, CH-1093 La Conversion (CH). **RYSER, Antoine** [CH/CH]; Rue du Simplon 19, CH-1006 Lausanne (CH).

(74) Agent: **BORNE, Patrice**; Ave Nestlé 55, CH-1800 Vevey (CH).

(81) Designated States *(unless otherwise indicated, for every kind of national protection available)*: AE, AG, AL, AM, AO, AT, AU, AZ, BA, BB, BG, BH, BR, BW, BY, BZ, CA, CH, CN, CO, CR, CU, CZ, DE, DK, DM, DO, DZ, EC, EE, EG, ES, FI, GB, GD, GE, GH, GM, GT, HN, HR, HU, ID, IL, IN, IS, JP, KE, KG, KM, KN, KP, KR, KZ, LA, LC, LK, LR, LS, LT, LU, LY, MA, MD, ME, MG, MK, MN, MW, MX, MY, MZ, NA, NG, NI, NO, NZ, OM, PG, PH, PL, PT, RO, RS, RU, SC, SD, SE, SG, SK, SL, SM, SV, SY, TJ, TM, TN, TR, TT, TZ, UA, UG, US, UZ, VC, VN, ZA, ZM, ZW.

(84) Designated States *(unless otherwise indicated, for every kind of regional protection available)*: ARIPO (BW, GH, GM, KE, LS, MW, MZ, NA, SD, SL, SZ, TZ, UG, ZM, ZW), Eurasian (AM, AZ, BY, KG, KZ, MD, RU, TJ, TM), European (AT, BE, BG, CH, CY, CZ, DE, DK, EE, ES, FI, FR, GB, GR, HR, HU, IE, IS, IT, LT, LU, LV, MC, MT, NL,

[Continued on next page]

(54) Title: CAPSULE SYSTEM, DEVICE AND METHOD FOR PREPARING A FOOD LIQUID CONTAINED IN A RECEPTACLE BY CENTRIFUGATION

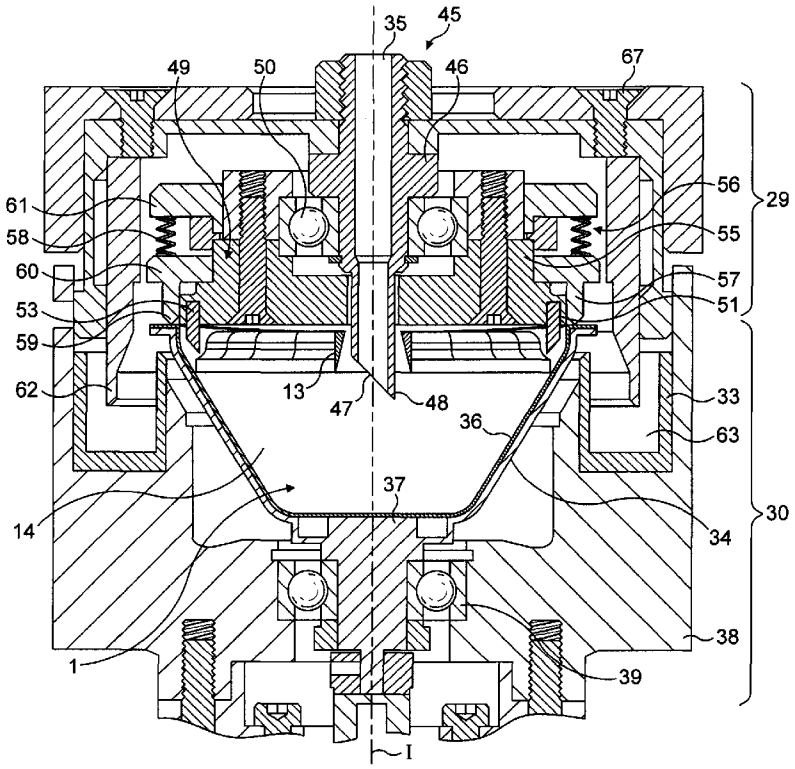

FIG. 10

(57) Abstract: Method for preparing a food liquid from a food substance contained in a receptacle by passing water through the substance using centrifugal forces comprising: driving the receptacle in centrifugal rotation while introducing water in the capsule, passing water through the substance to form a food liquid, collecting the centrifuged food liquid, wherein the receptacle is a single-use capsule (1) and, a flow restriction means (56) is arranged within the flow path of the centrifuged liquid.

WO 2008/148646 A1

NO, PL, PT, RO, SE, SI, SK, TR), OAPI (BF, BJ, CF, CG, CI, CM, GA, GN, GQ, GW, ML, MR, NE, SN, TD, TG).

Declarations under Rule 4.17:

— *as to applicant's entitlement to apply for and be granted a patent (Rule 4.17(ii))*

— *as to the applicant's entitlement to claim the priority of the earlier application (Rule 4.17(iii))*

— *of inventorship (Rule 4.17(iv))*

Published:

— *with international search report*

— *before the expiration of the time limit for amending the claims and to be republished in the event of receipt of amendments*

Capsule system, device and method for preparing a food liquid contained in a receptacle by centrifugation

The present invention relates to a device and capsule system for preparing a food liquid from a food substance contained in a receptacle by passing water through the substance using centrifugal forces.

It is known to prepare beverages wherein a mixture consisting of brewed coffee and coffee powder is separated with centrifugal forces. Such a mixture is obtained by bringing hot water and coffee powder together for a defined time. The water is then forced through a screen, on which screen powder material is present.

Existing systems consist of placing the coffee powder in a receptacle which is usually a non-removable part of a machine such as in EP 0367 600B1. Such devices have many disadvantages. Firstly, the coffee powder must be properly dosed manually in the receptacle. Secondly, the centrifuged coffee waste becomes dry and it must be removed by scraping the surface of the receptacle. As a result, the coffee preparation requires a lot of manual handling and is so very time consuming. Usually coffee freshness can also vary a lot and this can impact on the cup quality because coffee comes generally from bulk package or coffee is ground from beans in the receptacle itself.

Also, depending on the manual dosage of coffee and the brewing conditions (e.g., centrifugal speed, receptacle size) the cup quality can vary a lot.

Therefore, these systems have never reached an important commercial success.

In German patent application DE 102005007852, the machine comprises a removable holder into which an open cup-shaped part of the receptacle is placed; the other part or lid being attached to a driving axis of the machine. However, a disadvantage is the intensive manual handling. Another disadvantage is the difficulty to control quality of the coffee due to a lack of control for the dosing of the powder and a lack of control of the freshness of the coffee powder.

Other devices for brewing coffee by centrifuge forces are described in WO 2006/112691; FR2624364; EP0367600; GB2253336; FR2686007; EP0749713; DE4240429; EP0651963; FR2726988; DE4439252; EP0367600; FR2132310;

K-FEE SYSTEM GMBH, EX2004, page 3
NESPRESSO USA, INC. v. K-FEE SYSTEM GMBH
IPR2024-00304, U.S. PATENT 11,465,830

FR2513106; FR2487661; DE3529053; FR2535597; WO2007/041954; DE3529204; DE3719962; FR2685186; DE3241606 and US-A-4545296.

However, the effect of centrifugal forces to brew coffee or prepare other food substances presents many advantages compared to the normal brewing methods using pressure pumps. For example, in "espresso" coffee-type brewing methods, it is very difficult to master all the parameters which influence the quality of extraction of the delivered coffee extract. These parameters are typically the pressure, the flow rate which decreases with the pressure, the compaction of the coffee powder which also influences the flow characteristics and which depends on the coffee ground particle size, the temperature, the water flow distribution and so on.

Therefore, there is a need for proposing a new capsule system and a method adapted therefore for which the extraction parameters can be better and more independently controlled and therefore can be better mastered for controlling quality of the delivered food liquid.

At the same time, there is a need for a way of preparing a food liquid which is more convenient compared to the prior art centrifugal coffee preparation devices and which provides a better in-cup quality with a higher control of important quality parameters such as freshness and accurate dosage of the substance in the receptacle.

Therefore, the invention relates to a system for preparing a food liquid from a food substance contained in a receptacle by passing water through the substance using centrifugal forces comprising:

a device for receiving the receptacle, said device comprising means for driving the receptacle in centrifugation around an axis of rotation ,

wherein the receptacle is removable and forms a single-use capsule and,

wherein a flow restriction means is arranged in the flow path of the centrifuged liquid capable of providing a certain pressure drop during centrifugation.

The flow restriction means can be configured for providing a pressure drop of at least 0.5 bar of relative pressure during centrifugation. Preferably, the flow restriction means is configured for providing a pressure drop of between 1 and 6 bar, most preferably between 1.5 and 4 bar, of relative pressure during centrifugation.

K-FEE SYSTEM GMBH, EX2004, page 4
NESPRESSO USA, INC. v. K-FEE SYSTEM GMBH
IPR2024-00304, U.S. PATENT 11,465,830

According to an important aspect of the invention, a flow restriction within the flow path of the centrifuged liquid enables to control the release of the centrifuged liquid for improving the interaction of water with the substance within the capsule as well as providing eventually foam to the liquid by the pressure release and the shear stresses which are created at the restriction. More particularly, the flow restriction means enables to maintain a pressure of several bars at the periphery of the enclosure and so retards the release of the liquid.

In a possible mode, the device comprises a flow restriction means which is arranged after the outlet(s) of the capsule.

In particular, the flow restriction means can be part of the device itself.

In a preferred mode, the flow restriction means of the device comprises a valve means which opens or enlarge a liquid passage when a sufficient pressure of the centrifuged liquid is exerted on the valve means so that the liquid can release from the capsule out of the device.

The flow restriction means can be placed at or after the outlet of the capsule.

In a possible mode, a flow restriction means can be arranged in the capsule itself. In particular, a flow restriction means can be formed by openings. The openings may be a series of slots or holes in a peripheral portion of wall of the enclosure. Preferably, the series of slots or holes have a width or diameter that is lower than the average particle size of the substance contained in the enclosure of the capsule.
Preferably, the outlet openings of the enclosure of the capsule have an average diameter or width which is smaller than the average size of the particles forming the food substance.
Therefore, the openings can have a filtering function 'per se'.
The pressure drop at the portion of wall also depends on the size of the openings and free opening surface area of the openings. Therefore, the size of the opening and free opening surface area of the openings can be designed in the portion of wall to produce a certain pressure drop in the capsule itself. This enable to maintain a certain pressure in the enclosure and so improves the interaction between the food substance and water.

K-FEE SYSTEM GMBH, EX2004, page 5
NESPRESSO USA, INC. v. K-FEE SYSTEM GMBH
IPR2024-00304, U.S. PATENT 11,465,830

Depending on the size of the openings and the centrifugal parameters such as the rotating speed, the characteristics of the beverage can also be tailored, in particular, for coffee beverages.

Preferably, the diameter or width of the openings may be between 10 and 600 microns. Preferably, the total surface area of the openings is comprised between 5 and 200 mm^2. Most preferably, the total surface area is comprised between 10 and 50 mm^2.

A significant pressure drop at the peripheral portion of wall can be obtained when the width or diameter of the holes are less than 200 microns, e.g., between 1 and 200 microns. A pressure drop of from about 1 to 4 bar, more preferably of from 2 to 3 bar, above the atmospheric pressure can be successfully obtained at the portion of wall. For coffee, a liquid extract with a high solids concentration comparable to a ristretto, espresso or lungo-type coffees can be successfully brewed within this range of pressures.

A lower pressure drop is obtained, e.g., lower than 1 bar when the openings have a width or diameter at or above 200 microns and if no flow restriction is placed in the flow path such as an additional valve placed within the liquid flow path in the device that would create a higher pressure drop. In case of a low pressure drop in the liquid flow path, the portion of wall with the large outlet openings can serve to retain the solid particles in the enclosure. However, the liquid tends to leave more quickly the enclosure (i.e., a higher flow rate is created) and less interaction takes place between water and the substance in the enclosure. For coffee, this may lead to a lower solid and aroma concentration of the coffee extracts comparable to a filter-type coffee.

Preferably, the flow restriction means of the device comprises a valve means of the device, which is arranged at or after the outlet(s) of the capsule, for opening when a certain pressure is exerted on the valve means so that the liquid can release from the capsule out of the device.

In a possible mode, both the device and capsule comprise flow restriction means. Alternatively, the flow restriction means is present in the capsule and not in the device. A valve means in the device provides the advantage of a control of the pressure of liquid exerted in the capsule at the level of the device. The valve means can be designed to open at a certain pressure threshold, for example by calibration or adjustment, for matching the features of various or specific beverages, e.g., coffee extract, tea extract, instant beverages, etc.

K-FEE SYSTEM GMBH, EX2004, page 6
NESPRESSO USA, INC. v. K-FEE SYSTEM GMBH
IPR2024-00304, U.S. PATENT 11,465,830

As a result, the system of the invention provides a solution for preparing a food liquid wherein a controlled release of the food liquid can be carried out. For example, the release of liquid can be delayed until a certain pressure is exerted on the valve means which is sufficient to form a passage for flow of liquid. A delayed opening of the valve means enables to improve the interaction between water and the substance contained in the capsule. For coffee, for example, it may be advantageous to optimize interaction of water and the ground coffee particles to obtain a good extraction of the coffee and aroma compounds. Moreover, the valve means provides a restriction which may improve the creation of foam or coffee crema.

The valve means can be formed by at least one engaging portion of the device which moves relatively to an engaging portion of the capsule under the effect of the pressurized liquid for making a thin annular laminating passage for the liquid. The engaging portion of the capsule can be, for instance, a radial portion of edge of the capsule. The laminating passage also enables to create a liquid jet of relatively high velocity that impacts on a wall of the device. As a result, a relatively high amount of foam can be created both due to the restriction that is created by the valve means and by the impact of the liquid on the impact surface of the device at a relatively high velocity during centrifugation. Depending on the amount of pressure exerted on the valve means by the centrifuged liquid, the restriction caused by the valve means can differ in amplitude.

According to an aspect of the invention, at least one of said engaging portions of the valve means is spring loaded to move away relatively to the other engaging portion under the force of the centrifuged liquid. In particular, the engaging portion of the device can be associated to a spring loading member. For instance, the spring loading member is a rubber elastic member or a mechanical spring. The spring loading member can be an O-ring, an helicoidal or blade-type spring or any equivalent means. For example, the engaging portion of the valve means can also comprise an annular pressing edge which is arranged to seal on the engaging portion of the capsule. The pressing edge may take different forms such as a V, W or U shape in order to exert a sufficient sealing pressure on the capsule when the pressure of liquid is still under a predetermined threshold.

In a mode, the annular rim of the capsule can also be deflectable to move away from the engaging portion of the valve means under the effect of the pressurized fluid. The engaging portion of the valve means can also be fixed or resiliently mobile and the

K-FEE SYSTEM GMBH, EX2004, page 7
NESPRESSO USA, INC. v. K-FEE SYSTEM GMBH
IPR2024-00304, U.S. PATENT 11,465,830

engaging portion of the capsule can be deflectable under the effect of pressurized liquid. Thus, the effect of valve can also be obtained partially or totally by a deflecting part of the capsule that deflects under the pressure of liquid that exits the capsule.

In a preferred mode, the device comprises a water injection subassembly for injecting water in the capsule comprising at least one piercing member that is substantially aligned with the axis of rotation of the capsule. Preferably, the piercing member has a tubular passage for injecting water into the capsule along said axis of rotation.

The invention also relates to a liquid food preparation device for preparing a liquid food from a food substance contained in a single-use capsule, removably insertable in the device, by passing water through the substance using centrifugal forces comprising:

- water injection means for introducing water in the capsule,
- means for positioning and centring the receptacle along an axis of rotation,
- means for driving the capsule in centrifugation around the axis of rotation,

wherein it comprises a flow restriction means which is arranged within the flow path of the centrifuged liquid.

Preferably, the flow restriction means comprises valve means which is arranged at or after at least one outlet of the capsule for opening when a certain pressure is exerted thereon by the pressurized liquid for enabling the liquid to be released from the capsule.

In a possible mode, the valve means can be calibrated or adjusted to selectively open a liquid passage through the device at a threshold of pressure in the capsule.

In a preferred mode, the valve means can be formed by at least one engaging portion of the device which is adapted to move relatively to an engaged portion of the capsule under the effect of the pressurized liquid exiting the capsule, for making a thin annular laminating passage for the liquid.

K-FEE SYSTEM GMBH, EX2004, page 8
NESPRESSO USA, INC. v. K-FEE SYSTEM GMBH
IPR2024-00304, U.S. PATENT 11,465,830

The valve means can be formed by at least one engaging portion which moves relatively to another engaging portion under the effect of the pressurized liquid exiting the capsule, for making a thin annular laminating passage for the liquid.

In a possible mode, the flow restriction means comprises a peripheral portion of wall of the capsule placed in the liquid flow path exiting the enclosure of the capsule and comprising outlet openings of less than 200 microns, more preferably between 10 and 150 microns. At this size of the openings, a pressure drop of several bars can be maintained in the enclosure which is efficient for enabling an efficient interaction between water and the substance, in particular, for ground coffee. The overall surface area of the openings of the peripheral portion of wall is also preferably lower than 50% of the total surface area of said portion of wall, most preferably lower than 40%.

The invention further relates to a method for preparing a food liquid from a food substance contained in a receptacle by passing water through the substance using centrifugal forces comprising:

driving the receptacle in centrifugal rotation while introducing water in the capsule,

passing water through the substance to form a food liquid,

collecting the centrifuged food liquid,

characterized in that:

the receptacle is a single-use capsule and,

a flow restriction means is arranged within the flow path of the centrifuged liquid.

In a preferred mode, the flow restriction means comprises a valve means allowing food liquid to be released only when a certain pressure of the centrifuged liquid is reached at the valve means.
Preferably, the selective release of beverage is controlled by a spring-biased valve.

The flow restriction means can comprise a plurality of outlet openings such as slots or holes which can be provided in a peripheral portion of wall of the capsule.

K-FEE SYSTEM GMBH, EX2004, page 9
NESPRESSO USA, INC. v. K-FEE SYSTEM GMBH
IPR2024-00304, U.S. PATENT 11,465,830

The flow restriction means can comprise the combination of a valve means for controlling the release of centrifuged liquid at a certain threshold of pressure and a plurality of outlet openings provided in the capsule. The plurality of outlet openings is preferably provided in an inner wall of the capsule and a collecting recess of the capsule is placed downstream of the inner wall. The collecting recess can be delimited by the inner wall and a pierceable surface of the capsule

The method further comprises controlling the release of food liquid by a spring-biased valve.

In particular, the food liquid leaves the capsule by at least one outlet pierced through an upper pierceable surface of the capsule. In particular, several outlets are pierced in the upper surface of the capsule which are spaced apart on the upper surface and close to the sidewall of the surface. According to the method of the invention, water can be introduced in the capsule along the rotation axis of the capsule. Water can be introduced at relatively low pressure or a pressure close to gravity.

The term "food liquid" has here a broad meaning and encompasses: a culinary liquid such as soup or sauce, a beverage liquid such as coffee (ground and/or instant), chocolate, milk (powder and/or liquid), tea (instant and/or leaf), etc., or a nutritional liquid such as an infant formula and combinations thereof.

Additional features of the invention will appear in the detailed description of the figures which follows.

Figure 1 is a perspective view from above of a capsule of the invention;

Figure 2 is a perspective view from below of the capsule of the invention;

Figure 3 is perspective view of the capsule with the sealing foil removed;

Figure 4 is a cross section view of the capsule of the invention;

Figure 5 is a perspective view of the lid from above of the capsule of the invention;

Figure 6 is a perspective view of the lid from below of the capsule of figure 4;

K-FEE SYSTEM GMBH, EX2004, page 10
NESPRESSO USA, INC. v. K-FEE SYSTEM GMBH
IPR2024-00304, U.S. PATENT 11,465,830

Figure 7 is a perspective view of the beverage production device of the invention;

Figure 8 is a perspective view of the beverage production module in open mode;

Figure 9 is a cross-sectional view along line A-A of the beverage production module in a closed mode about the capsule;

Figure 10 is an enlarged view of the view of figure 9;

Figure 11 is a view of the water injection assembly of the module of figures 9 and 10;

Figure 12 is a cross sectional view of a beverage production module similar to figure 9 but for another embodiment of the invention;

Figure 13 is a detail view of the module of figure 12;

Figure 14 is a cross section view of a variant of the capsule of the invention;

Figure 15 is a view from underside of the lid of the capsule of figure 14;

Figure 16 is a perspective cross sectional view of a capsule according to another mode of the invention;

Figure 17 is a cross sectional view of the capsule of figure 16;

Figure 18 is a cross sectional view of a capsule according to still another mode.

As shown in figures 1 and 2, a preferred capsule 1 of the invention generally comprises a dished body 2 onto which is sealed a sealing foil 3. The sealing foil 3 is sealed onto a peripheral rim 4 of the body at a sealing annular portion 5. The rim 4 can extend outwards forming a small annular portion, e.g., of about 2-5 mm. The dished body comprises a bottom wall 6 and a side wall 7 which preferably widens in direction of the large open end of the body opposed to the bottom wall. The dished

K-FEE SYSTEM GMBH, EX2004, page 11
NESPRESSO USA, INC. v. K-FEE SYSTEM GMBH
IPR2024-00304, U.S. PATENT 11,465,830

body is preferably rigid or semi-rigid. It can be formed of a food grade plastics, e.g., polypropylene, with a gas barrier layer such as EVOH and the like or aluminium alloy or a complex of plastic and aluminium alloy. The sealing foil 3 can be made of a thinner material such as a plastic laminate also including a barrier layer or aluminium alloy or a combination of plastic and aluminium alloy. The sealing foil is usually of a thickness between 50 and 250 microns, for example. The sealing foil member can be pierced for creating the water inlet and the beverage outlet(s) as will be described later in the description.

In relation to the embodiment of figures 3 to 6, the capsule of the invention comprises an inner member forming a lid 8 which is inserted in the dished body. The lid 8 and body 2 delimit together an internal enclosure 14 for receiving the food substance 22. Preferably, the capsule forms a symmetry of revolution around a central axis A. However, it should be noted that the capsule may not necessarily have a circular section around axis A but may take another form such as a square or a polygonal form. The lid 8 is illustrated in figures 5 and 6. The lid can take the form of a disc of plastic comprising a central portion 9 and a peripheral portion 10. The central portion can be substantially flat and may comprise a inlet port 11 for enabling the introduction of a water injection member of the beverage production device. In the internal side 12 of the lid, the inlet port can extend by a tubular inlet portion 13 which serves for ensuring the water is guided toward the direction of the bottom of the body to ensure complete wetting of the substance in the enclosure and so reduced risk of leaving for example "dry powder spots". Preferably, the inlet port is closed by a breakable or puncturable closure part 15. This part serves to prevent substance of the enclosure from filling the interstice between the upper surface of the lid and the sealing foil.

The lid further comprises a peripheral portion 10 including a collecting recess 16. The collecting recess forms a U-shape in transversal section (figure 3) which opens in the direction of the sealing foil. The recess is preferably continuously extending at the periphery of the lid although it can be replaced by several discontinuous recessed portions which may be separated by reinforcing elements or walls, for example. The collecting recess comprises an inner peripheral portion of wall 17 into which is provided a series of outlet openings 18 forming a fluid communication between the enclosure 14 and the collecting recess 16.

The outlet openings also form a restriction in the flow of the centrifuged liquid in the enclosure. The centrifuged liquid is forced to pass the openings which can be sized as

K-FEE SYSTEM GMBH, EX2004, page 12
NESPRESSO USA, INC. v. K-FEE SYSTEM GMBH
IPR2024-00304, U.S. PATENT 11,465,830

a function of the type of beverage to be produced. For instance, for espresso or ristretto coffee extract, it can be advantageous to provide smaller openings than for lungo or "Americano" coffee extract. For a same rotational speed, smaller openings create a higher resistance to the centrifuged liquid which remains longer in the capsule. As a consequence, the interaction between water and the coffee particles is higher and liquid can charge more in coffee solids.

As illustrated in this example, the openings may be slots or holes which are distributed at intervals in the inner peripheral portion of wall 17. For example, the number of slots can range of from 5 to 200, preferably of from 10 to 100. These slots have preferably a width that is smaller than the statistical average size of the particles of the substance. For example, the slots have a width of less than 500 microns for a substance which is ground coffee. The slots may extend if necessary on the central portion 9 or in the bottom of the recess 16. The slots can be replaced by holes of circular section having a diameter smaller than the statistical average size of the particles of the substance.

The collecting recess 16 forms a peripheral groove of small depth, e.g., between 2 and 10 mm to allow the introduction of piercing members through the sealing foil to produce outlets for the brewed liquid which is produced in the capsule as will explained later in the description. The collecting recess 16 further comprises an outer peripheral portion 19 forming an edge bearing onto a seat portion 20 of the dished body. The outer portion 19 can be engaged in the seat portion 20 by a more or less tight fit engagement. An additional sealing portion 21 extending along the internal surface of the side wall of the body and in the direction of the bottom of the dished body can extend from the recess to create further sealing against possible ingress of liquid between the lid and the inner surface of the body of the capsule. Of course, the form of the collecting recessed means can take different configurations without departing from the scope of the invention. For example, the recess 16 can be formed by the lid 8 and the side wall 7 of the dished body (as illustrated in figure 13). In this case, the outer peripheral portion 19 can be omitted.

As illustrated in the figures, the series of outlet openings, e.g., slots 18, are preferably placed at or close to the widening part of the enclosure relative to the central axis A. Therefore, the centrifuged liquid will tend to be guided along the inner surface of the side wall of the body, up to the inner side 12 of the lid, and then through the slots.

K-FEE SYSTEM GMBH, EX2004, page 13
NESPRESSO USA, INC. v. K-FEE SYSTEM GMBH
IPR2024-00304, U.S. PATENT 11,465,830

The lid 8 is fully closed by the sealing foil 3 when it is sealed onto the rim of the dished body. In a possible alternative, the sealing foil could cover only the collecting recess including the region of the slots.

It should be noticed that the lid 8 can be a rigid or semi-rigid member made of thermoformed or injected plastic for instance. However, this part could also be made of a flexible membrane which is sealed to the inner surface of the dished body without departing from the scope of the invention.

It can also be noticed that a filter wall can also be placed inside the enclosure against the inside surface 12 of the lid. A filter wall can provide an improved filtration, for example, for substance of very thin particle size and/or for delaying the release of the centrifuged liquid out of the enclosure by creating a higher pressure drop. A filter wall can be a paper filter or thin plastic film which is glued onto the surface 12 of the lid. The lid can be simply inserted in the dished shaped body or be fixed by any suitable connection means such as by ultrasonic welding.

The system including a capsule of the invention and a beverage preparation device is illustrated in figures 7 and 8 and described now.

Thus, the system comprises a capsule 1 as aforementioned and a beverage preparation device 23. The device has a module 24 into which a capsule can be inserted. The capsule contains a food substance for being brewed and the capsule is removed from the module after use for being discarded (e.g., for waste or recycling of the organic and inorganic raw materials). The module 24 is in fluid communication with a water supply such as a water reservoir 25. A fluid transport means such as a pump 26 is provided in the fluid circuit 27 between the module and the water supply. A water heater 28 is further provided to heat water in the fluid circuit before water enters the module. The water heater can be inserted in the fluid circuit to heat fresh water coming from the reservoir or alternatively can be in the water reservoir that becomes a water boiler in such case. Of course, water can also be taken directly from a domestic water supply via a water plug connection.

Water can be fed in the module 24 at low pressure or even at gravity pressure. For example, a pressure of between 0 and 2 bar above atmospheric pressure can be envisaged at the water inlet of the module. Water at higher pressure than 2 bar could also be delivered if a pressure pump is utilized such a piston pump.

The brewing module 24 can comprise two main capsule encasing sub-assemblies 29, 30; mainly comprising a water injection sub-assembly and a liquid receiving

K-FEE SYSTEM GMBH, EX2004, page 14
NESPRESSO USA, INC. v. K-FEE SYSTEM GMBH
IPR2024-00304, U.S. PATENT 11,465,830

subassembly. The two subassemblies form positioning and centring means for the capsule in the device.

The two assemblies' closes together to encase a capsule therein for example by a bayonet-type connection system 31. The liquid receiving subassembly 30 comprises a liquid duct 32, for example, protruding on a side of the subassembly for guiding the centrifuged liquid coming out of the capsule to a service receptacle such as a cup or glass. The liquid duct is in communication with a liquid receiver 33 forming a cylindrical wall placed at a short distance about a rotating drum 34 into which the capsule is inserted as illustrated in figure 8. The liquid receiver defines with the drum an intermediate cavity 63 for collecting the liquid as will be explained later in the description. Below the liquid receiving subassembly 30, are placed means for driving the capsule receiving drum 34 in rotation inside the subassembly.

The driving means comprise preferably a rotary motor 40 which can be supplied by electricity or gas power.

The water injection subassembly comprises a water inlet side comprising a water inlet 35 communicating upstream with the water fluid circuit 27.

In relation to figures 9 and 10, the rotary drum 34 is shaped as a hollow capsule holder with an internal cavity 36 complementary shaped to receive the capsule. The rotary drum 34 prolongs itself axially by a rotating shaft 37 which is maintained in rotational relationship relative to an outer base 38 of the liquid receiver 33 by a rotational guiding means 39 like a ball bearing or needle bearing. Therefore, the rotary drum is designed to rotate around a median axis I whereas the outer base 38 of the receiver is fixed relative to the device. The liquid receiver 33 can be fixed to a housing 43 of the motor by bolts 44 for example. A mechanical coupling 41 is placed at the interface between the rotating shaft 37 of the drum and the shaft 42 of the motor 40.

Considering the water injection subassembly 29, as illustrated in figures 10 and 11, it comprises a centrally arranged water injector 45 which is fixed relative to longitudinal axis I of the device. The water injector comprises a central tubular member 46 for transporting water from the inlet 35 to a water outlet 47 that is intended to protrude inside the enclosure 14 of the capsule. The water outlet is formed of a puncturing means 48 such as a sharp tubular tip that is able to create a puncture hole through the closing foil of the capsule and through the eventual breakable part of the tubular inlet 13 of the lid.

K-FEE SYSTEM GMBH, EX2004, page 15
NESPRESSO USA, INC. v. K-FEE SYSTEM GMBH
IPR2024-00304, U.S. PATENT 11,465,830

About the water injector is mounted a capsule rotary engaging part 49. The engaging part 49 has a central bore for receiving the water injector and rotational guiding means such as a ball or needle bearing 50 inserted between the part 49 and the injector 45. The engaging part further comprises outlet piercing members 51, 52, 53, 54 protruding from a disc-shaped engaging wall 55 of the part 49. The piercing members can be small cylindrical portions with a slanted cutting surface able to cut or perforate small holes in the sealing foil 3 of the capsule. The piercing members are arranged at the periphery of the wall 55, preferably evenly distributed to provide several openings in the capsule for the centrifuged liquid to leave the capsule forming several streams of liquid.

According to one aspect of the invention, the water injection subassembly 29 further comprises a valve system 56 for controlling the flow of liquid that is discharged from the device. The valve system 56 can be arranged on the capsule rotary engaging part 49 in the form of an annular engaging portion 57 which is biased under the force of elastic loading means 58 such as springs. The annular engaging portion 57 includes a pressing peripheral surface 59 which applies a closing force on the peripheral rim 4 of the capsule to be able to restrict the flow of liquid under the force of the elastic loading means. The surface 59 can form a cone or "V" for increasing the sealing pressure in a localized area. The engaging portion 57 further comprise an internal base portion 60. The elastic loading means 58 is thus inserted in a space located between the base portion 60 and a counter-force portion 61 of the engaging part 49. Therefore, at a rest position, the engaging portion 57 of the valve system keeps closing on the rim of the capsule under the compressive effect of the resilient means 58.

The capsule engaging subassembly 29 may further comprise a tubular portion of skirt 62 which protrudes in the internal annular chamber 63 of the liquid receiving subassembly 30 when the two subassemblies are closed relatively one another about a capsule. This tubular portion of skirt 62 forms an impact wall for the centrifuged liquid under pressure that passes through the valve system. This portion 62 is preferably fixed on the subassembly 29. The subassembly further comprises a handling portion 64 for facilitating the connection on the liquid receiving subassembly 30. This handling portion 64 can have a knurled peripheral surface for handling. The handling portion can be fixed on the fixed base of the subassembly 29 by screws 67.

K-FEE SYSTEM GMBH, EX2004, page 16
NESPRESSO USA, INC. v. K-FEE SYSTEM GMBH
IPR2024-00304, U.S. PATENT 11,465,830

This portion could of course be replaced by a lever mechanism or a similar handling means.

As already mentioned, connection means are provided for the relative connection of the two subassemblies 29, 30. For example, small pins 65 are provided on the side of the tubular surface of the water injection subassembly 29 which can engage side locking openings 66 on the tubular surface of the liquid receiving subassembly 30. Therefore, connection between the two subassemblies can be carried out by a rotational angular or helicoidal closure movement for enabling the pins to engage the oblong openings 66. Of course, other connection means can be envisaged to replace this bayonet-type connection means. For instance, a threading means or a translational closure means can be envisaged by any person skilled in the art.

The capsule system of the invention works basically according to the following principle. The capsule device is opened by moving the two subassemblies 29, 30 relatively one another, e.g., by disconnecting the bayonet-type connection and separating the two subassemblies' 29, 30. As a result, a single-use sealed capsule 1 containing a food substance can inserted in the device, i.e., placed in the cavity of the rotating drum 36. The capsule can be placed in the device while the capsule being gastight closed by the sealing foil 3. The device is then closed by the subassembly 29 being connected back onto the subassembly 30 and locked by the connection means. In the locked position, the capsule is opened by the water injector that pierces through the sealing foil of the capsule and introducing itself through the water inlet 35 of the capsule. At the same time, several liquid outlets are pierced at the periphery of the sealing foil by the outlet piercing members 51-54. Water can thus be introduced in the capsule via the central water injector 45. Venting holes can be produced in the injection subassemblies to allow gas to escape the capsule while water is introduced in. The capsule can be driven in rotation by activating the rotary motor 40. The start of the centrifugal operation can be carried out at the same time as water injection start being introduced in the capsule or slightly after or before this water injection operation starts.

For instance, it might be advantageous for brewing ground coffee, to allow during several seconds that water fills in the capsule before starting the centrifugal operation by rotating the capsule. Thus, water can properly infiltrate in the coffee before, the liquid is centrifuged thereby avoiding coffee area to remain dry in the coffee portion.

K-FEE SYSTEM GMBH, EX2004, page 17
NESPRESSO USA, INC. v. K-FEE SYSTEM GMBH
IPR2024-00304, U.S. PATENT 11,465,830

The centrifugation is carried out by rotating the capsule around the central axis I of rotation of the device that is preferably aligned to the central axis A of the capsule. The rotational speed is preferably of from 1000 to 12000 round-per-minute (rpm), more preferably of from 1500 to 8000 rpm. A control unit can be provided in the device for setting the rotational speed according to the nature of the liquid to be brewed and/or the substance in the capsule. The higher the rotational speed, the higher the pressure is exerted at the peripheral wall of the capsule and the more substance is compacted on the sidewall of the capsule. It is important to notice that higher rotational speeds promote brewing of coffee extract containing a lower solid content since the residence time of liquid in the coffee bed is shorter. Lower rotational speeds provide coffee of higher strength (coffee solid content) since the residence time of liquid in the capsule is longer. Brewing takes place in the capsule by water traversing the substance thereby providing an extraction or partial or total dispersion or dissolution of the substance. As a result, a centrifuged liquid is allowed to pass through the plurality of outlet openings 18 provided in the capsule, e.g., through the lid 8.

Under the effect of centrifugal forces, the substance, such as coffee powder, tends to compact itself radially against the peripheral walls 7, 17 of the enclosure of the capsule. whereas water is forced to flow through the substance. This results in the substance being both compacted and intimately wetted by water. Due to the high rotational movement of the capsule, the centrifugal forces exert themselves uniformly on the mass of the substance. Consequently, the water distribution is also more uniform compared to usual methods using a pressure pump to exert the pressure in the capsule. As a result, there is lower risk of preferential flow path through the substance which could lead to areas which are not properly wetted and so not properly brewed, dispersed or dissolved. With ground coffee powder, the liquid that reaches the internal sidewall of the capsule is a liquid extract. This liquid extract is then forced to flow upwards along the internal surface of the sidewall of the capsule. The widening of the sidewall 7 of the capsule promotes the upward flow of the liquid in the capsule in direction of the openings.

These outlet openings 18 of the enclosure of the capsule are sized as a function of the substance stored in the capsule. Small openings such as slots of small width or holes of small diameter tend to provide a filtering function to retain the solid particles in the enclosure of the capsule while allowing only the liquid extract to pass the openings.

K-FEE SYSTEM GMBH, EX2004, page 18
NESPRESSO USA, INC. v. K-FEE SYSTEM GMBH
IPR2024-00304, U.S. PATENT 11,465,830

Also as aforementioned, the openings may also provide a flow restriction that impacts on the interaction of water with the substance and on the creation of foam or crema on the top of the beverage. These holes also form sufficient restrictions that create shear forces and consequently generate foam or coffee crema. Some gas contained in the capsule can become entrapped in the liquid and forms, due to the pressure release after the flow restriction, a multitude of small bubbles in the liquid.

Also, the valve system 56 of the device can start opening as pressure of liquid increases on the valve when leaving the capsule. Therefore, a certain time delay before opening can be controlled by the valve system to enable sufficient interaction between water and the substance contained in the capsule. This controlled delay depends on various parameters such as the centrifugal speed, the force exerted by the elastic loading means (i.e., spring stiffness), the pressure drop as created by the substance and outlet openings, etc. The opening of the valve system occurs by the pressing surface 59 of the valve system lifting as pressure of liquid increases on its internal surface. It can be noted that the capsule of the rim can also be substantially flexible to flex under the effect of the pressure of liquid. Therefore, the relative movement between the pressing surface and the capsule create a small passage for the liquid to escape out of the small interstice upstream of the valve system. At relatively high rotational speeds, a jet of liquid can be formed that impacts on the internal surface of the portion of skirt 62. The liquid starts to fill the cavity 68 of the liquid receiving subassembly and liquid can drain through the liquid duct 32 to be collected in a cup or glass placed underneath.

In the other mode of the invention illustrated in figures 12 and 13, the same numeral references have been taken to identify the same or equivalent technical means. In this mode, the valve system 56 differs in that the elastic loading means is obtained by a rubber elastic O-ring 69 inserting between a pinching surface 59 and a fixed portion 61 of the water injection subassembly 29. The O-ring is maintained between two concave portions 70, 71 of the valve system. Again during brewing, the pressure of liquid in the capsule tends to lift the pinching surface 59 to create a passage between the rim 4 of the capsule and the pinching surface. The pinching surface can be shaped with a sharp tip or edge that can create a concentration of forces on the rim. Of course, it could be imagined that the elastic loading means and the pinching portion are the same element. For example, the pinching portion can be made of rubber-elastic material.

K-FEE SYSTEM GMBH, EX2004, page 19
NESPRESSO USA, INC. v. K-FEE SYSTEM GMBH
IPR2024-00304, U.S. PATENT 11,465,830

In the mode of figures 12 or 13, the water injector can be a simple water inlet in the capsule with no puncture means. In this case, the capsule is pre-opened before it is inserted in the device, i.e., the sealing foil is removed by peeling, or a central hole is perforated before the capsule is inserted in the device. Furthermore, a sealing engagement of the water injector can be performed by a sealing means 72 which applies a certain sealing pressure on the top surface of the capsule. Therefore, water is prevented from leaking along the top surface of the capsule and from by-passing the capsule to release directly through the liquid outlet.

The capsule of the invention can take various embodiments such as the one illustrated in figures 14 and 15. The general structure of the capsule is the same as for the previous embodiment except that the outlet openings are formed by a filter paper, a woven or non-woven portion or another meshed or porous membrane 72. Thus, the lid 8 which is inserted in the dished body 2 comprises a circumferential band of a porous material. The porous material provides restriction of the flow, creating a certain pressure drop, e.g., between 0.5 and 4 bar, and leading to a filtering of the solid particles. In particular, the size of the pores of the material can be chosen to retain also the coffee fines, i.e., the particles of particle size as low as 90 microns. The pressure drop is also obtained when the overall open surface of the porous band is lower than 50% of the total surface area of the surface of the band. The paper, fabric, meshed or porous material can be formed of a band or bands which can be welded or otherwise combined to the lid.

In another possible mode, the recess 16 can be filled by a porous compressible material to provide a filtering function as well. For example, the material could be sponge or fabric.

According to figures 16 and 17, the capsule in the system of the invention may also comprise an enclosure which is formed of a dished body 2 and a porous wall 80. The dished body comprises a main cavity 82 for storing the food substance and a peripheral recess 81 for receiving the liquid extract that traverses the porous wall 80 during the centrifugation process. The recess 81 is delimited by an inner edge 83 and an outer rim 84 . The porous wall 80 can be attached to an inner edge 83 of the recess 81. A gastight foil membrane 86 is preferably attached onto the outer rim 84 of the body. The inner edge is preferably placed below the outer rim in order to let a free space 85 between porous wall 80 and the foil membrane 86. The porous wall can be sealed by heat or ultrasonic welding onto the inner edge 83.

K-FEE SYSTEM GMBH, EX2004, page 20
NESPRESSO USA, INC. v. K-FEE SYSTEM GMBH
IPR2024-00304, U.S. PATENT 11,465,830

The porous wall 80 can have openings (i.e., pores) along its whole surface or along a peripheral portion of wall only. Figure 16 shows a portion of the wall 87 which normally have the openings whereas the central portion 88 is free of openings.
In a different mode the two portions 87, 88 have the openings.
The pressure is dependent on various factors, in particular, the rotating speed of the capsule in the device, the radius at the peripheral portion of wall 87 (specially, determining the relative centrifugal force "g" at the portion 87) and the size of the openings. The size of the openings is preferably comprised between 1 and 600 microns. More preferably, the size of the openings is comprised between 10 and 200 microns forming a flow restriction means which creates a certain drop of pressure during the centrifugation of the capsule along its central axis. The overall surface area of the pores of the porous wall should be lower than 50% of the total surface area of said wall, most preferably lower than 40%.
The capsule of figures 16 and 17 can be pierced in its centre 89 for injecting water in the enclosure 82 containing the substance. As a result both the outer foil 86 and the inner wall 80 are pierced. The capsule is inserted in a device as described before. The capsule is driven in centrifugal rotation at a determined speed, e.g., between 1000 and 16000 rpm, more preferably betwwen 5000 and 12000 rpm. The brewing or dissolution process takes place in the enclosure by water traversing the substance. As a result of the centrifugal effect, the food liquid traverses the porous portion of wall 87, (eventually also part of the portion 88 if porous) and leaves the enclosure via the interspace 85 then via the annular recess 81. The liquid is allowed to leave the capsule via pierced holes made in the foil above the recess 81.
Figure 18 shows a similar capsule but with the inner porous wall 80 comprising a central portion 880 which is sealed to the external gastight foil 86 and a peripheral portion 870 which is distant from the foil 86. In this example, the peripheral portion 870 comprises the outlet openings of the enclosure. The central portion 880 may have openings or may be free of openings. In this embodiment, no liquid is allowed to go between the outer foil 86 and the inner portion of wall 880 since both are sealed together. If a sufficient pressure drop is created at the portions of wall 870 in the capsule, the device may not necessarily be provided with an additional flow restriction means such as the valve described previously. In this case, the flow restriction means in the capsule suffices to maintain a sufficient pressure in the enclosure and so obtain a good interaction between the substance, e.g., ground coffee

K-FEE SYSTEM GMBH, EX2004, page 21
NESPRESSO USA, INC. v. K-FEE SYSTEM GMBH
IPR2024-00304, U.S. PATENT 11,465,830

and water. For example, good espresso-type coffee with crema can be produced with a capsule comprising a woven polymer membrane comprising pores within a range of between 10 to 200 microns.

It can be noted that the peripheral portion of the capsule comprising the restriction means, e.g., openings, can be substantially oriented perpendicularly to the axis of rotation as in the examples of figures 16 to 18 or inclined relative to said axis as in the example of figures 1 to 6.

In another possible mode, the flow restriction can be obtained or complemented by chicanes in the capsule or a similar structure forming a tortuous flow path for the liquid.

The system capsule of the invention provide remarkable brewing results with solid contents which are higher than with usual systems. The results are very reproducible from capsule to capsule. Surprisingly, crema is also remarkably improved with a creamier, more stable and thicker texture.

It can be noted that the pressure drop of the restriction means can be measured by a pressure measurement test consisting of filling water under pressure in the capsule and measuring the pressure of water at the injection point at which liquid is allowed to pass the restriction means, i.e., the valve system.

Of course, the invention may encompass many variants which are included in the scope of the patent claims that follow.

K-FEE SYSTEM GMBH, EX2004, page 22
NESPRESSO USA, INC. v. K-FEE SYSTEM GMBH
IPR2024-00304, U.S. PATENT 11,465,830

CLAIMS:

1. System for preparing a food liquid from a food substance contained in a receptacle by passing water through the substance using centrifugal forces comprising:

a device for receiving the receptacle, said device comprising means for driving the receptacle in centrifugation around an axis of rotation (I),

characterized in that the receptacle is removable and forms a single-use capsule and,

wherein a flow restriction means is arranged in the flow path of the centrifuged liquid capable of providing a certain pressure drop during centrifugation.

2. System according to claim 1, wherein the device comprises the flow restriction means which is arranged in the flow path after the at least one outlet of the capsule.

3. System according to claim 2,wherein the flow restriction means comprises a valve means which is arranged at or after the outlet of the capsule for opening or enlarge a liquid passage when a sufficient pressure of the centrifuged liquid is exerted on the valve means so that the liquid can release from the capsule out of the device.

4. System according to claim 3, wherein said valve means is formed by at least one engaging portion of the device which moves relatively to an engaging portion of the capsule under the effect of the pressurized liquid for making a thin annular laminating passage for the liquid.

5. System according to claim 4, wherein
at least one of said engaging portions is spring loaded to move away relatively to the other engaging portion under the effect of the pressurized liquid.

6. System according to claim 5, wherein said the engaging portion of the device is associated to a spring loading member.

7. System according to claim 6, wherein the spring loading member is a rubber elastic member or at least one mechanical spring.

K-FEE SYSTEM GMBH, EX2004, page 23
NESPRESSO USA, INC. v. K-FEE SYSTEM GMBH
IPR2024-00304, U.S. PATENT 11,465,830

8. System according to claim 6, wherein the engaging portion comprises an annular pressing edge which is arranged to seal on the engaging portion of the capsule.

9. System according to claim 8, wherein the engaging portion of the capsule is formed by an annular rim of the capsule.

10. System according to claim 9, wherein the annular rim of the capsule is deflectable to move away from the engaging portion under the effect of the pressurized fluid.

11. System according to claim 5, wherein the engaging portion of the device is fixed and the engaging portion of the capsule is deflectable under the effect of pressurized.

12. System according to any of the preceding claims, wherein

the flow restriction means comprises a peripheral portion of wall of the capsule placed in the liquid flow path exiting the enclosure of the capsule and comprising outlet openings of less than 200 microns.

13. System according to any of the preceding claims, wherein

the device comprises a water injection assembly for injecting water in the capsule comprising at least one piercing member that is substantially aligned with the central axis (A) of the capsule.

14. System according to claim 13, wherein

the piercing member has a tubular passage for injecting water into the capsule.

15. System according to any of the preceding claims, wherein the flow restriction means is configured for providing a pressure drop of at least 0.5 bar of relative pressure during centrifugation.

16. System according to claim 15, wherein the flow restriction means is configured for providing a pressure drop of between 1 and 6 bar of relative pressure during centrifugation.

K-FEE SYSTEM GMBH, EX2004, page 24
NESPRESSO USA, INC. v. K-FEE SYSTEM GMBH
IPR2024-00304, U.S. PATENT 11,465,830

17. Liquid food preparation device for preparing a liquid food from a food substance contained in a single-use capsule, removably insertable in the device, by passing water through the substance using centrifugal forces comprising:
- water injection means for introducing water in the capsule,
- means for positioning and centring the receptacle along the axis of rotation (I),
- means for driving the capsule in centrifugation around an axis of rotation (I),

wherein it comprises wherein it comprises a flow restriction means which is arranged within the flow path of the centrifuged liquid.

18. Device according to claim 17, wherein the flow restriction means comprises a valve means which is arranged at or after the outlet of the capsule for opening when a certain pressure is exerted thereon by the pressurized liquid for enabling the liquid to be released from the capsule.

19. Device according to claim 18, wherein the valve means is calibrated or adjusted to selectively open a liquid passage through the device at a threshold of pressure in the capsule.

20. Device according to claim 19, wherein the valve means is formed by at least one engaging portion of the device which is adapted to move relatively to an engaged portion of the capsule under the effect of the pressurized liquid exiting the capsule, for making a thin annular laminating passage for the liquid.

21. Device according to claim 19, wherein the valve means is formed by at least one engaging portion which moves relatively to another engaging portion under the effect of the pressurized liquid exiting the capsule, for making a thin annular laminating passage for the liquid.

22. Device according to any of claims 17 to 21, wherein the at least one engaging portion of the device forms an annular spring-loaded assembly that is arranged to leave a thin annular laminating passage for the release of liquid.

23. Device according to claims 20 or 21, wherein the engaging portion of the device comprises an engaging portion which is associated to a spring-loading member.

K-FEE SYSTEM GMBH, EX2004, page 25
NESPRESSO USA, INC. v. K-FEE SYSTEM GMBH
IPR2024-00304, U.S. PATENT 11,465,830

24. Device according to claims 23, wherein the spring-loading member is a rubber elastic member or a mechanical spring.

25. Device according to any of claims 17 to 24, wherein it comprises at least one piercing member placed to provide at least one peripheral outlet on a surface of the capsule.

26. Device according to claim 25, wherein the at least one piercing member is placed to pierce a peripheral outlet on an upper pierceable surface which covers a collecting recess in the capsule.

27. Device according to claim 26, wherein more than one piercing members are placed to pierce peripheral outlets spaced apart on the upper surface of the capsule and close to the sidewall of the surface.

28. Device according to any of claims 17 to 27, wherein a peripheral collecting surface is spaced apart and placed around the valve means onto which the centrifuged liquid passing through the valve can impact to be slowed down.

29. Method for preparing a food liquid from a food substance contained in a receptacle by passing water through the substance using centrifugal forces comprising:

driving the receptacle in centrifugal rotation while introducing water in the capsule,

passing water through the substance to form a food liquid,

collecting the centrifuged food liquid,

wherein the receptacle is a single-use capsule and,

a flow restriction means is arranged within the flow path of the centrifuged liquid to provide a certain pressure drop during centrifugation.

30. Method according to claim 29, wherein a pressure drop of at least 0.5 bar of relative pressure during centrifugation is maintained at the flow restriction means.

K-FEE SYSTEM GMBH, EX2004, page 26
NESPRESSO USA, INC. v. K-FEE SYSTEM GMBH
IPR2024-00304, U.S. PATENT 11,465,830

31. Method according to claims 29 or 30, wherein

the flow restriction means comprises a valve means allowing food liquid to be released only when a certain pressure of the centrifuged liquid is reached at the valve means.

32. Method according to claim 31, wherein the selective release of beverage is controlled by a spring-biased valve.

33. Method according to any of claims 30 to 32, wherein the food liquid leaves the capsule by at least one outlet pierced through an upper pierceable surface of the capsule.

34. Method according to claim 34, wherein several outlets are pierced in the upper surface of the capsule which are spaced apart on surface and close to the sidewall of the surface.

35. Method according to any of claims 30 to 34, wherein water is introduced in the capsule along the central axis of the capsule (A).

K-FEE SYSTEM GMBH, EX2004, page 27
NESPRESSO USA, INC. v. K-FEE SYSTEM GMBH
IPR2024-00304, U.S. PATENT 11,465,830

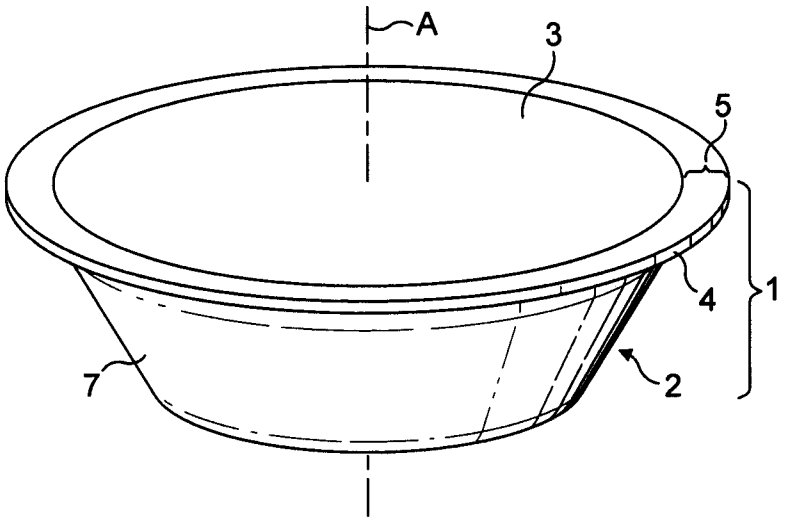

FIG. 1

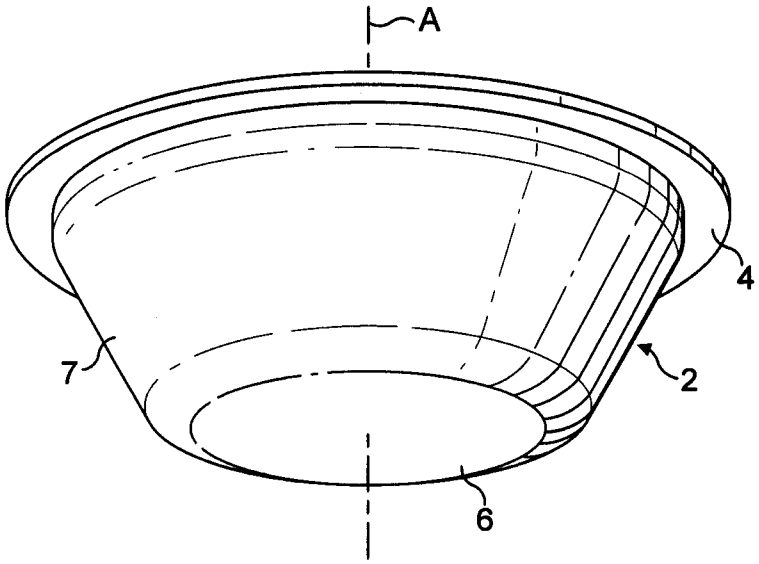

FIG. 2

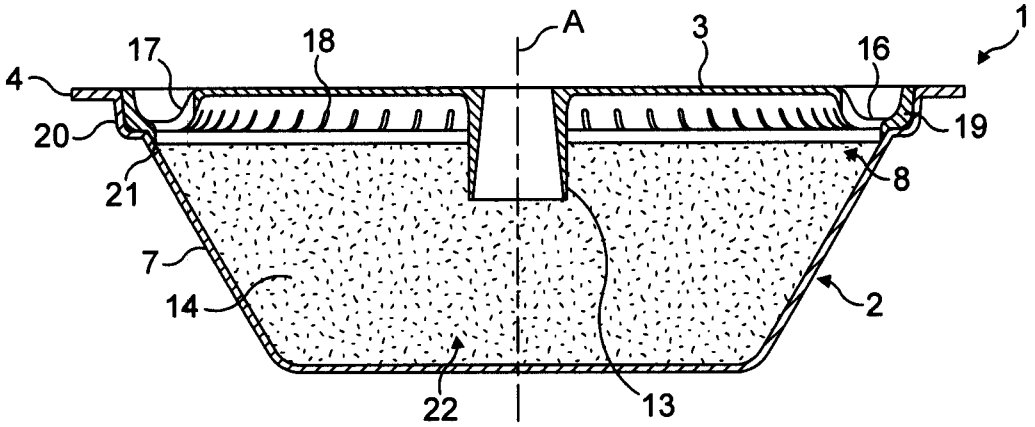

FIG. 3

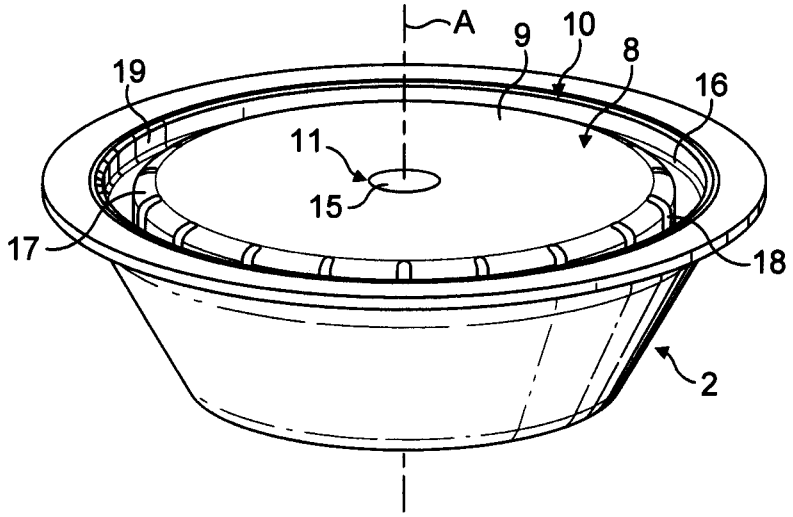

FIG. 4

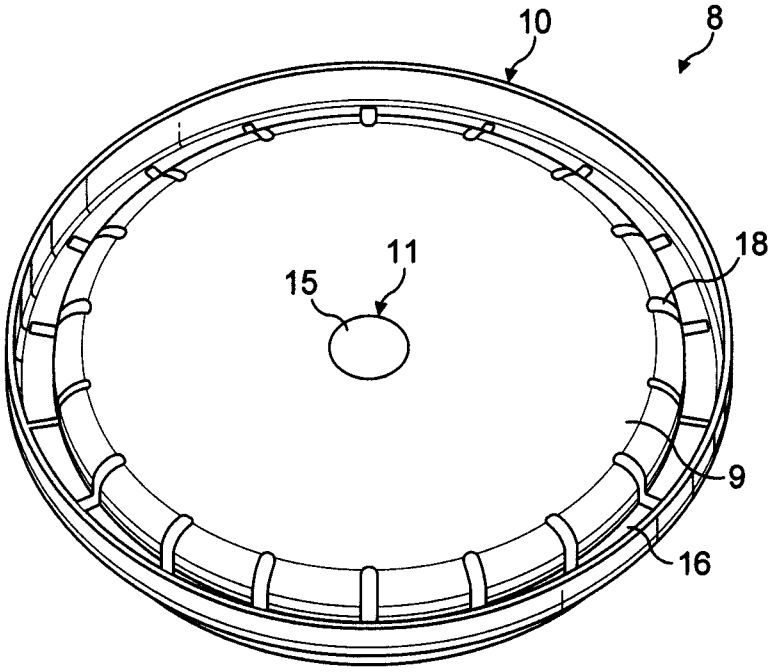

FIG. 5

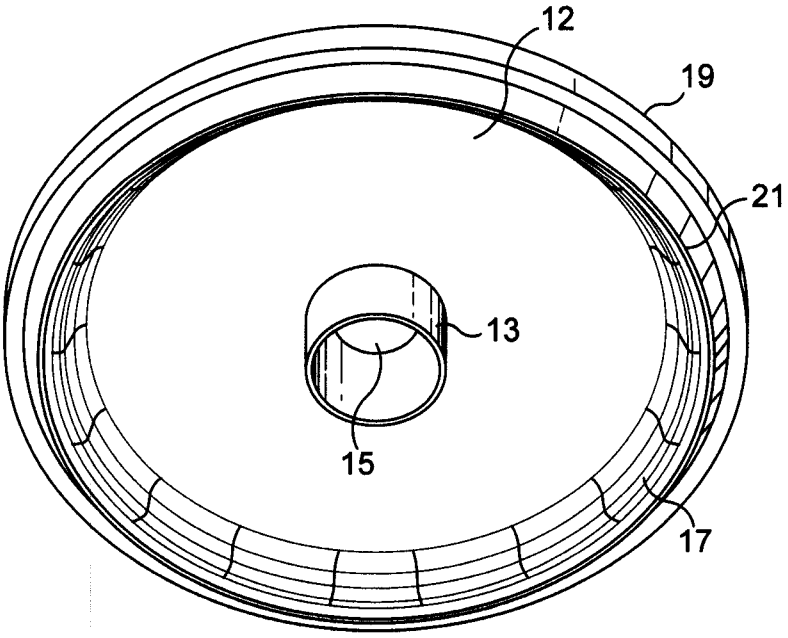

FIG. 6

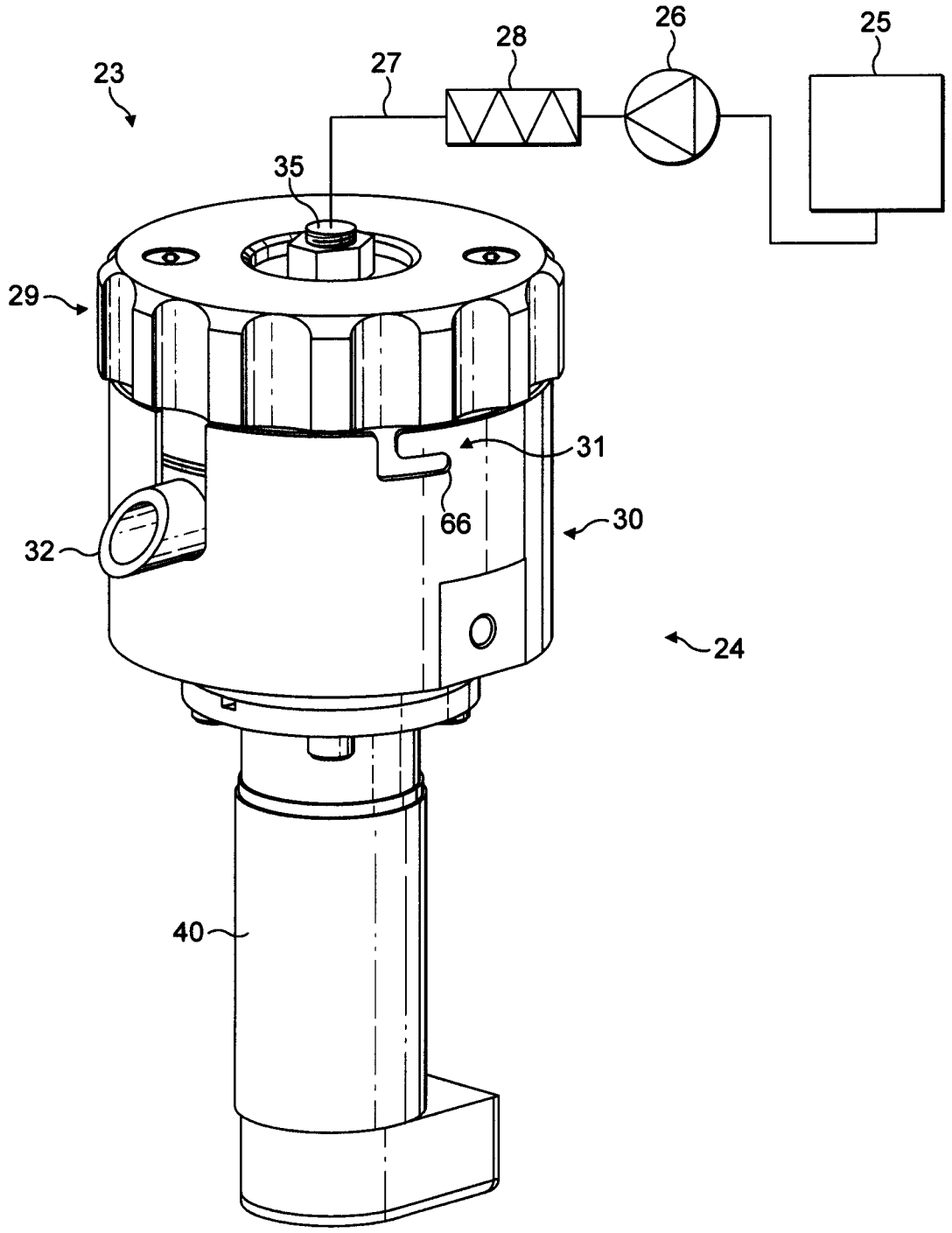

FIG. 7

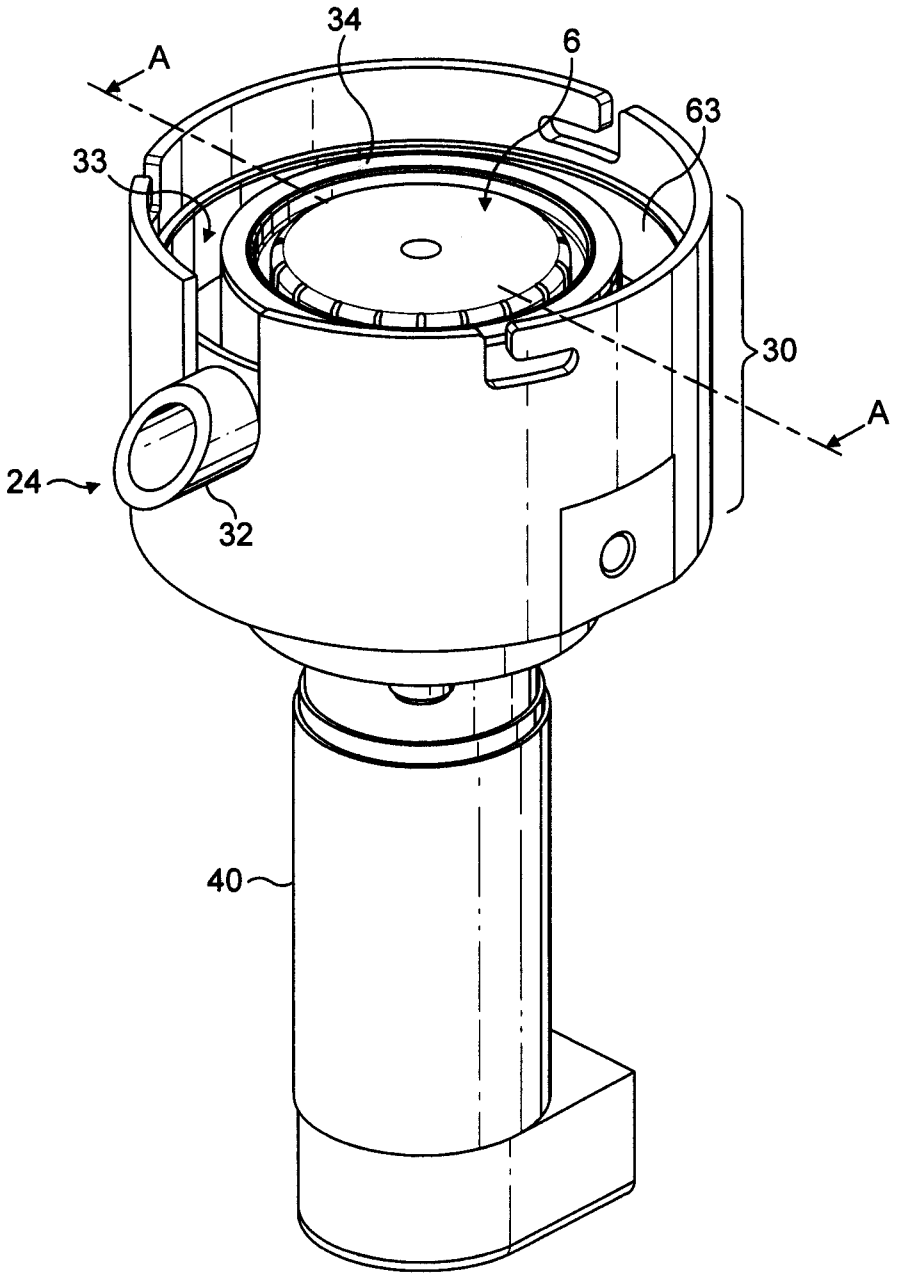

FIG. 8

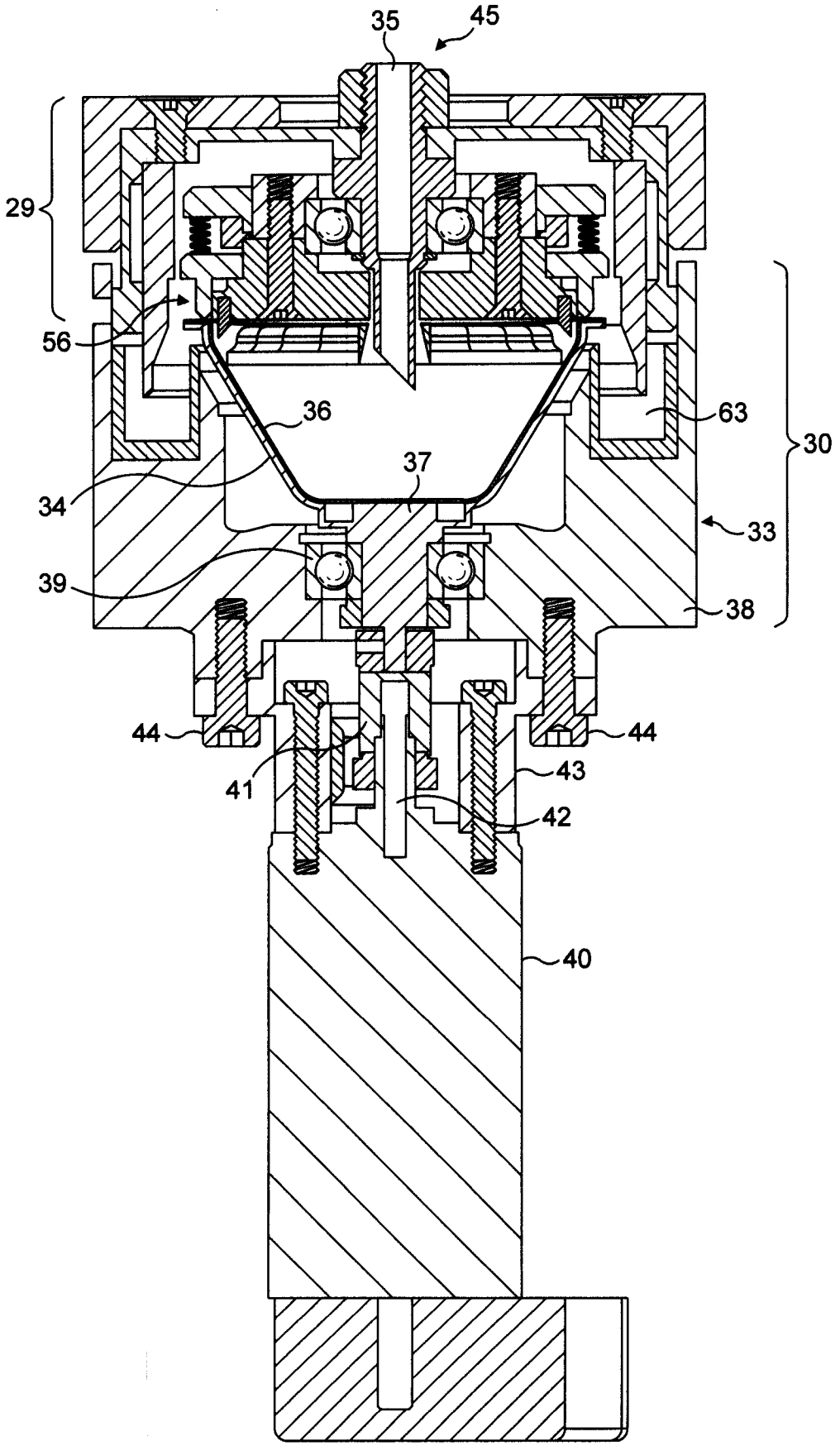

FIG. 9

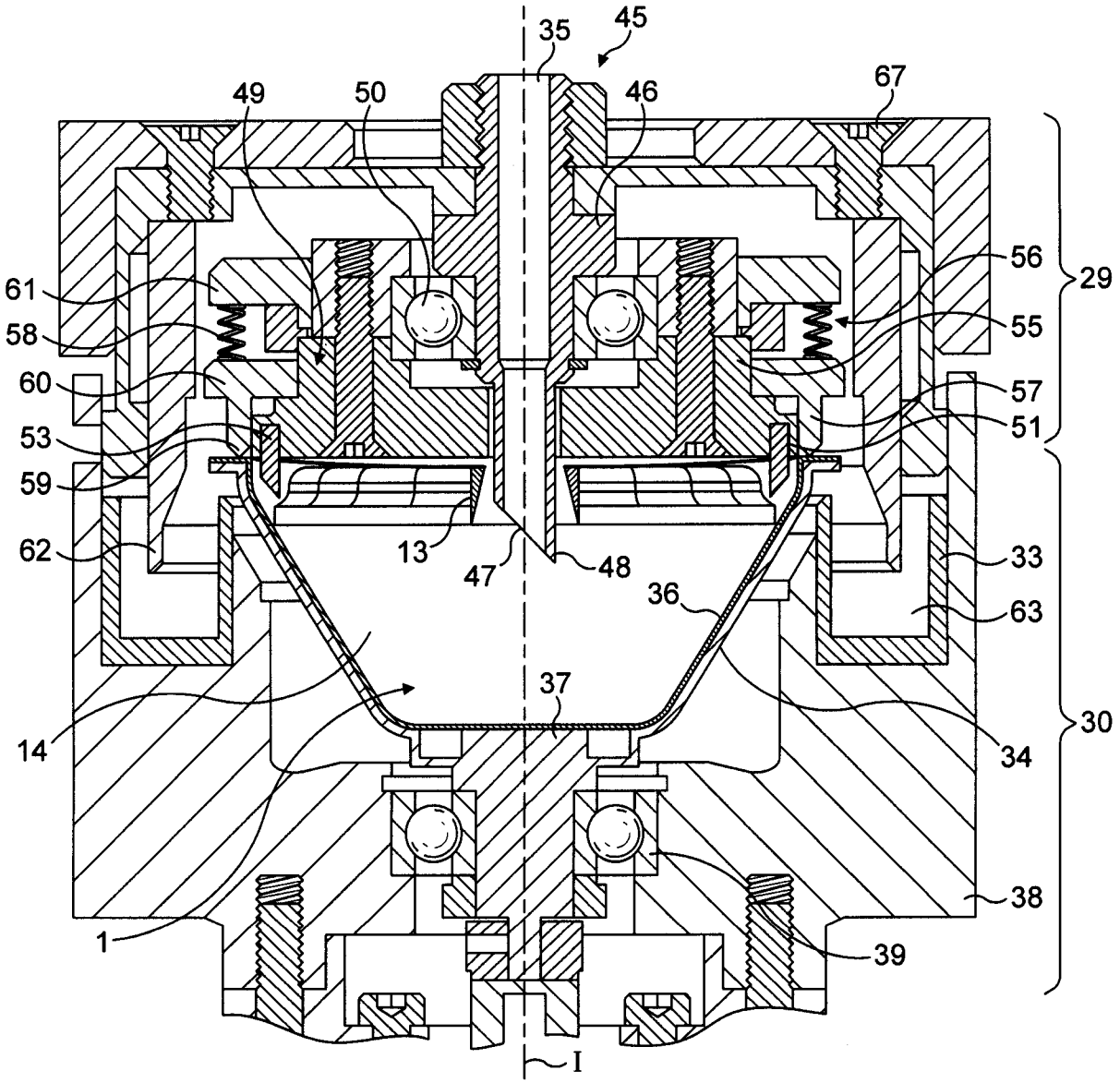
45
35
67
49
50
46
56
29
61
55
58
60
57
53
51
59
13
47
48
33
62
36
63
37
14
34
30
38
1
39
I

FIG. 10

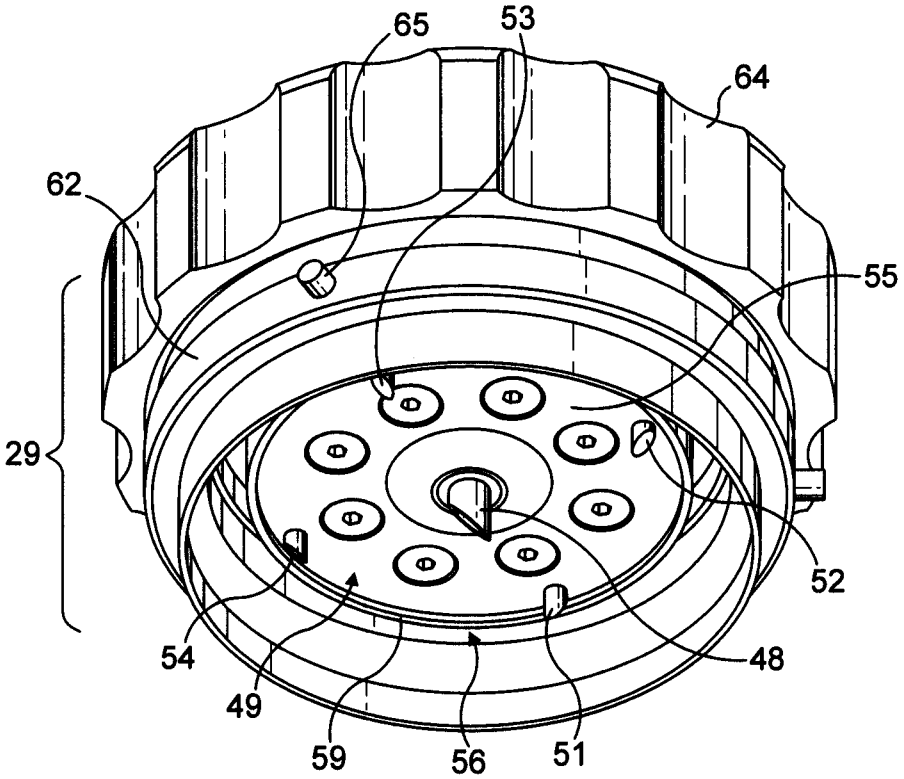

FIG. 11

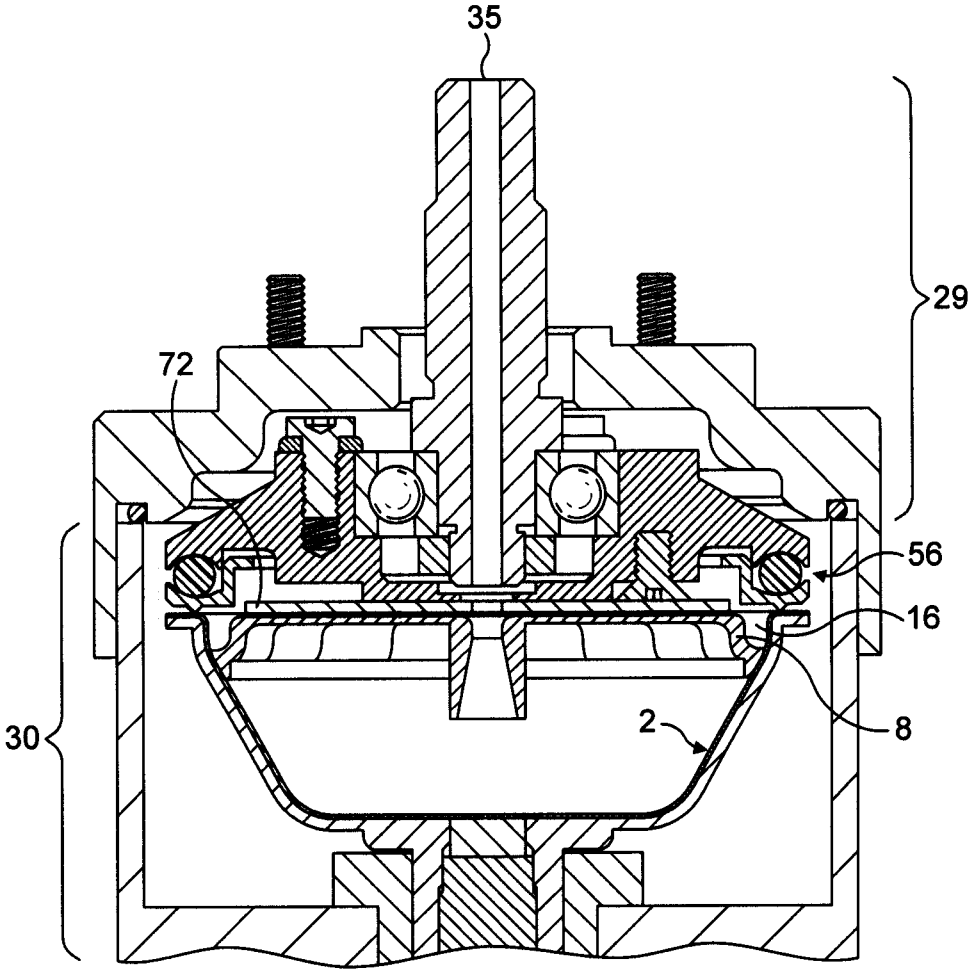

FIG. 12

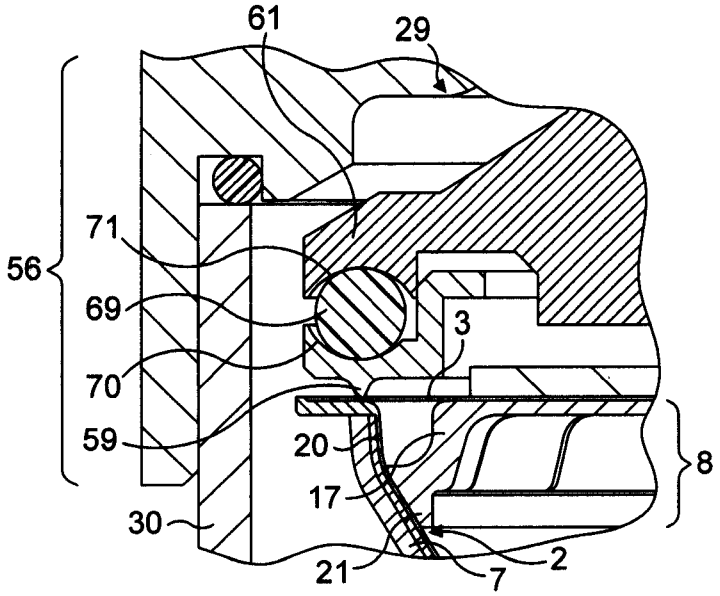

FIG. 13

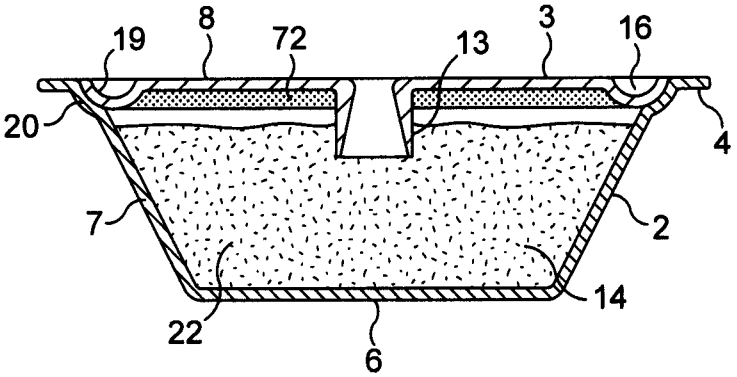

FIG. 14

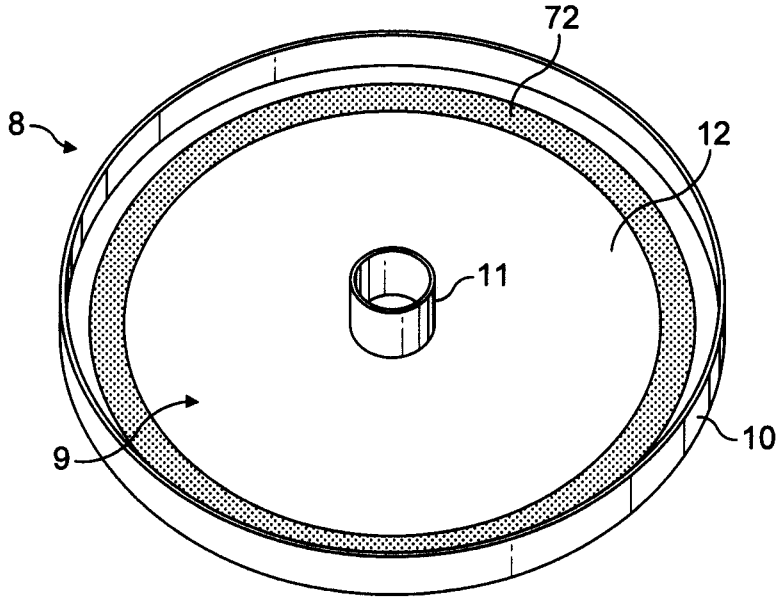

FIG. 15

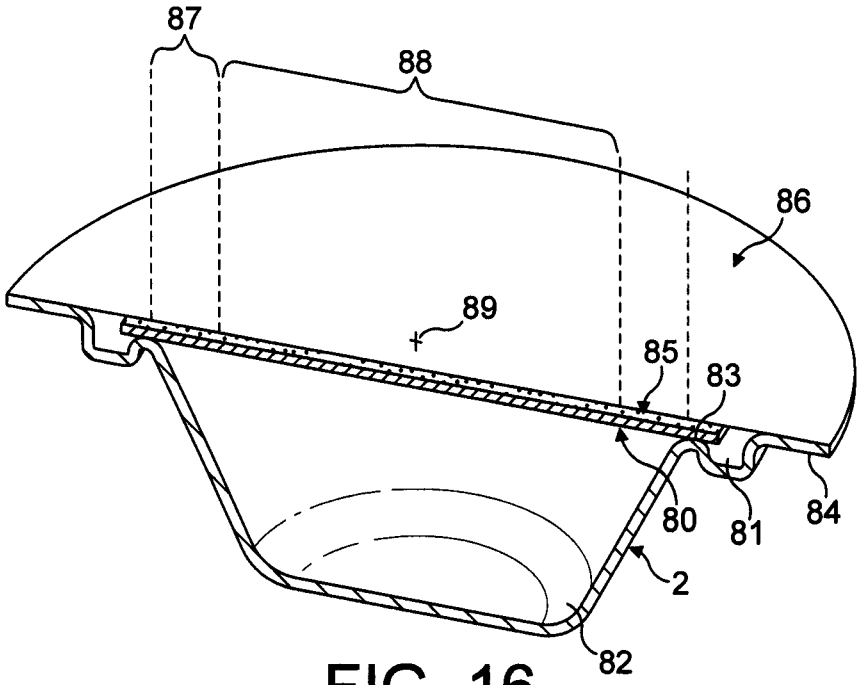

FIG. 16

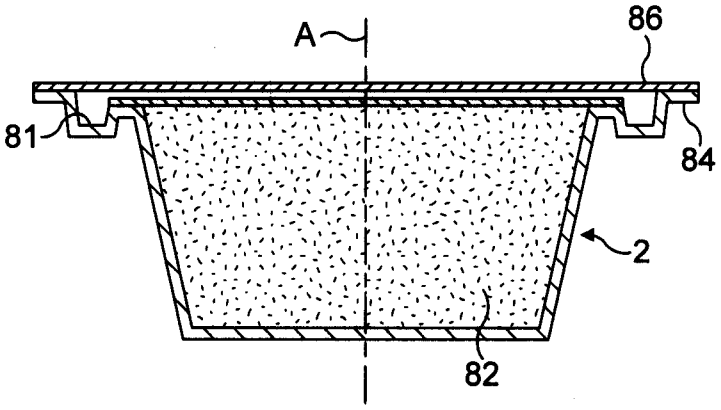

FIG. 17

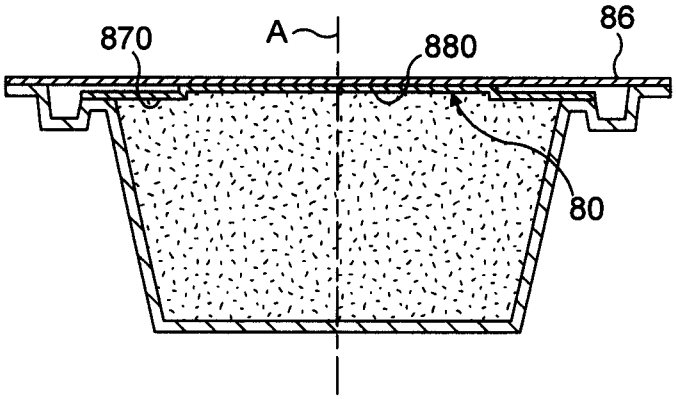

FIG. 18

INTERNATIONAL SEARCH REPORT

International application No
PCT/EP2008/056310

A. CLASSIFICATION OF SUBJECT MATTER
INV. A47J31/22 A47J31/06

According to International Patent Classification (IPC) or to both national classification and IPC

B. FIELDS SEARCHED

Minimum documentation searched (classification system followed by classification symbols)
A47J

Documentation searched other than minimum documentation to the extent that such documents are included in the fields searched

Electronic data base consulted during the international search (name of data base and, where practical, search terms used)

EPO-Internal

C. DOCUMENTS CONSIDERED TO BE RELEVANT

Category*	Citation of document, with indication, where appropriate, of the relevant passages	Relevant to claim No.
X	BE 894 031 A1 (GUERIN A) 4 February 1983 (1983-02-04)	1,12,17, 29
A	the whole document	13,15, 16,30,34

X	US 4 545 296 A (BEN-SHMUEL SONJA [US]) 8 October 1985 (1985-10-08) cited in the application	1,2,17, 29
A	column 5, line 39 - column 6, line 1 column 6, lines 38-54 column 8, lines 7-35 column 8, lines 56,57 figures 2-4	3,15,16, 18,28, 30,35

	-/--	

[X] Further documents are listed in the continuation of Box C.

[X] See patent family annex.

* Special categories of cited documents :

"A" document defining the general state of the art which is not considered to be of particular relevance

"E" earlier document but published on or after the international filing date

"L" document which may throw doubts on priority claim(s) or which is cited to establish the publication date of another citation or other special reason (as specified)

"O" document referring to an oral disclosure, use, exhibition or other means

"P" document published prior to the international filing date but later than the priority date claimed

"T" later document published after the international filing date or priority date and not in conflict with the application but cited to understand the principle or theory underlying the invention

"X" document of particular relevance; the claimed invention cannot be considered novel or cannot be considered to involve an inventive step when the document is taken alone

"Y" document of particular relevance; the claimed invention cannot be considered to involve an inventive step when the document is combined with one or more other such documents, such combination being obvious to a person skilled in the art.

"&" document member of the same patent family

Date of the actual completion of the international search	Date of mailing of the international search report
5 September 2008	08/10/2008

Name and mailing address of the ISA/	Authorized officer
European Patent Office, P.B. 5818 Patentlaan 2 NL - 2280 HV Rijswijk Tel. (+31-70) 340-2040, Tx. 31 651 epo nl, Fax: (+31-70) 340-3016	Novelli, Bruno

Form PCT/ISA/210 (second sheet) (April 2005)

K-FEE SYSTEM GMBH, EX2004, page 39
NESPRESSO USA, INC. v. K-FEE SYSTEM GMBH
IPR2024-00304, U.S. PATENT 11,465,830

INTERNATIONAL SEARCH REPORT

International application No
PCT/EP2008/056310

C(Continuation). DOCUMENTS CONSIDERED TO BE RELEVANT

Category*	Citation of document, with indication, where appropriate, of the relevant passages	Relevant to claim No.
A	US 5 566 605 A (LEBRUN ERIK [FR] ET AL) 22 October 1996 (1996-10-22) column 5, line 62 - column 6, line 47; figures 1-6 -----	1,3,7, 10,29,31

Form PCT/ISA/210 (continuation of second sheet) (April 2005)

K-FEE SYSTEM GMBH, EX2004, page 40
NESPRESSO USA, INC. v. K-FEE SYSTEM GMBH
IPR2024-00304, U.S. PATENT 11,465,830

INTERNATIONAL SEARCH REPORT

Information on patent family members

International application No
PCT/EP2008/056310

Patent document cited in search report		Publication date	Patent family member(s)	Publication date
BE 894031	A1	04-02-1983	NONE	
US 4545296	A	08-10-1985	NONE	
US 5566605	A	22-10-1996	NONE	