US011565930B2

(12) **United States Patent**
Glucksman et al.

(10) **Patent No.: US 11,565,930 B2**
(45) **Date of Patent: Jan. 31, 2023**

(54) **SMART PHONE DRINK MAKER**

(71) Applicant: **Appliance Development Corporation**, Danvers, MA (US)

(72) Inventors: **Dov Z. Glucksman**, Winchester, MA (US); **Andrew Joseph Rojee**, Norfolk, MA (US); **Michael David Miller**, Tewksbury, MA (US); **Joseph Grossi**, Amesbury, MA (US)

(*) Notice: Subject to any disclaimer, the term of this patent is extended or adjusted under 35 U.S.C. 154(b) by 0 days.

(21) Appl. No.: **17/334,573**

(22) Filed: **May 28, 2021**

(65) **Prior Publication Data**

US 2021/0380392 A1 Dec. 9, 2021

Related U.S. Application Data

(60) Provisional application No. 63/034,860, filed on Jun. 4, 2020.

(51) **Int. Cl.**
B67D 1/08 (2006.01)
B67D 1/00 (2006.01)

(52) **U.S. Cl.**
CPC ***B67D 1/0888*** (2013.01); ***B67D 1/0021*** (2013.01); ***B67D 1/0884*** (2013.01)

(58) **Field of Classification Search**
CPC .. B67D 1/0888; B67D 1/0021; B67D 1/0884; B67D 1/0046; B67D 1/0057; B67D 1/0425; B67D 2001/0098; B67D 2001/0811; B67D 2210/00034
See application file for complete search history.

(56) **References Cited**

U.S. PATENT DOCUMENTS

2016/0039653 A1* 2/2016 Jangbarwala B67D 1/16 222/1
2019/0291062 A1* 9/2019 Wood A47J 31/4492

* cited by examiner

Primary Examiner — Donnell A Long
(74) *Attorney, Agent, or Firm* — Frank Marino

(57) **ABSTRACT**

A beverage system including a beverage appliance and beverage containers where the functions required for creating beverages may be activated and controlled through a pre-programmed specific App (an application, especially as downloaded by a user to a mobile device), residing external to and wirelessly communicating with the apparatus.

19 Claims, 15 Drawing Sheets

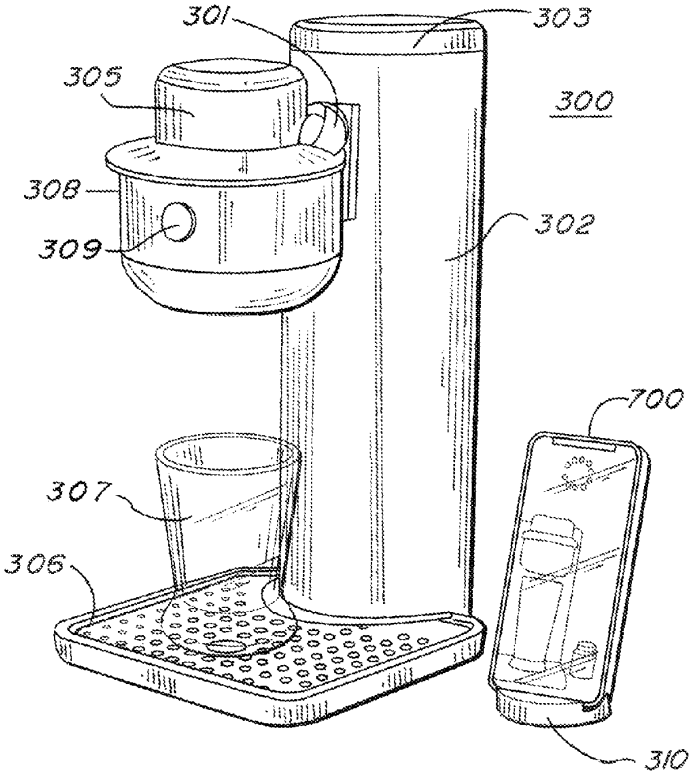

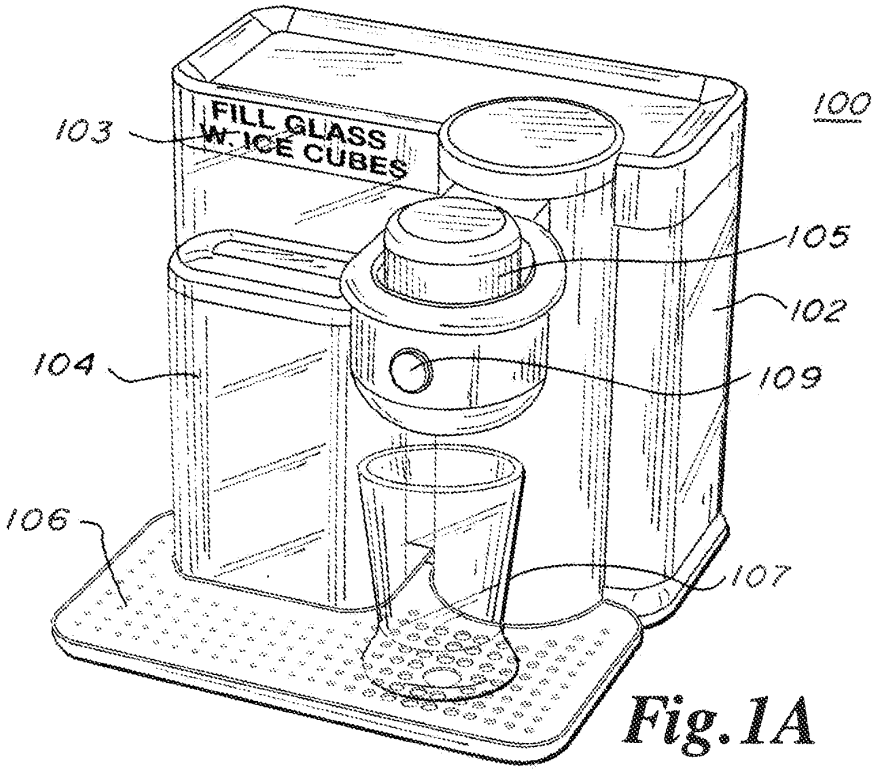
FILL GLASS
W. ICE CUBES
100
103
105
102
104
109
106
107

Fig.1A

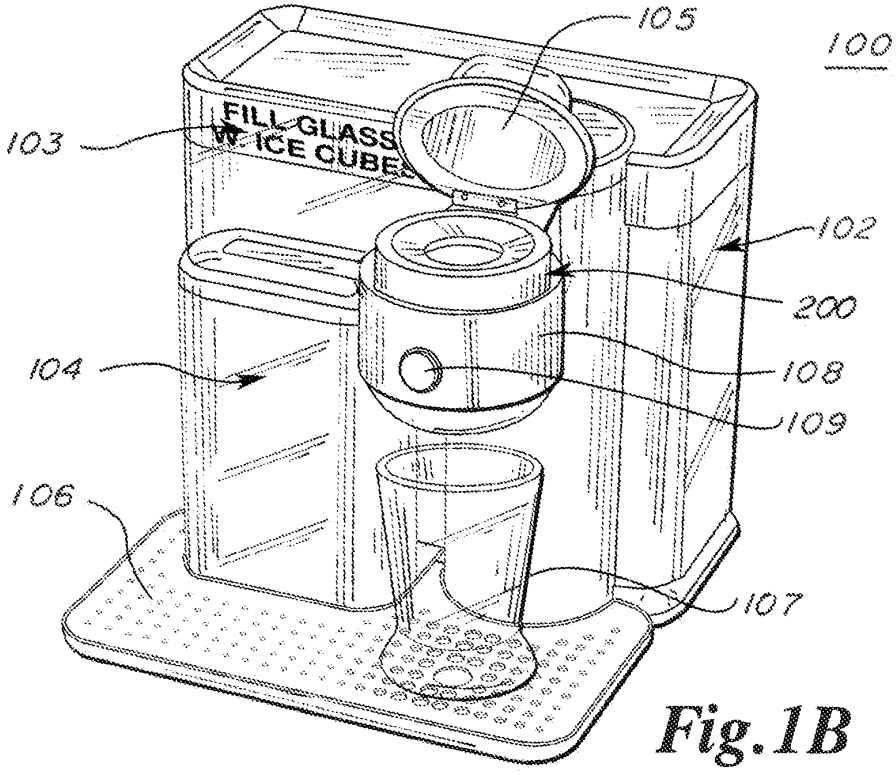
105
100
FILL GLASS
W. ICE CUBES
103
102
200
104
108
109
106
107

Fig.1B

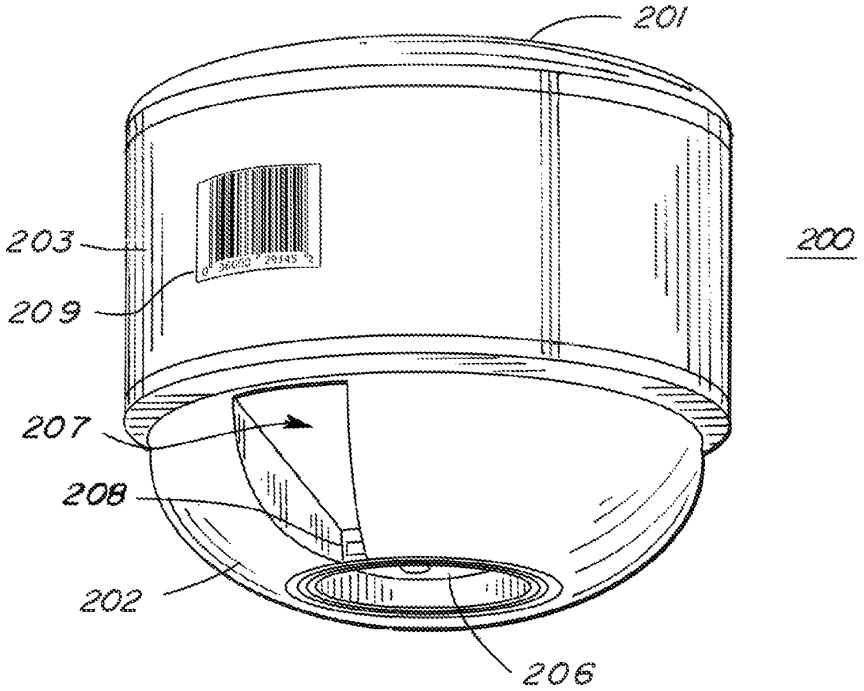

Fig.2

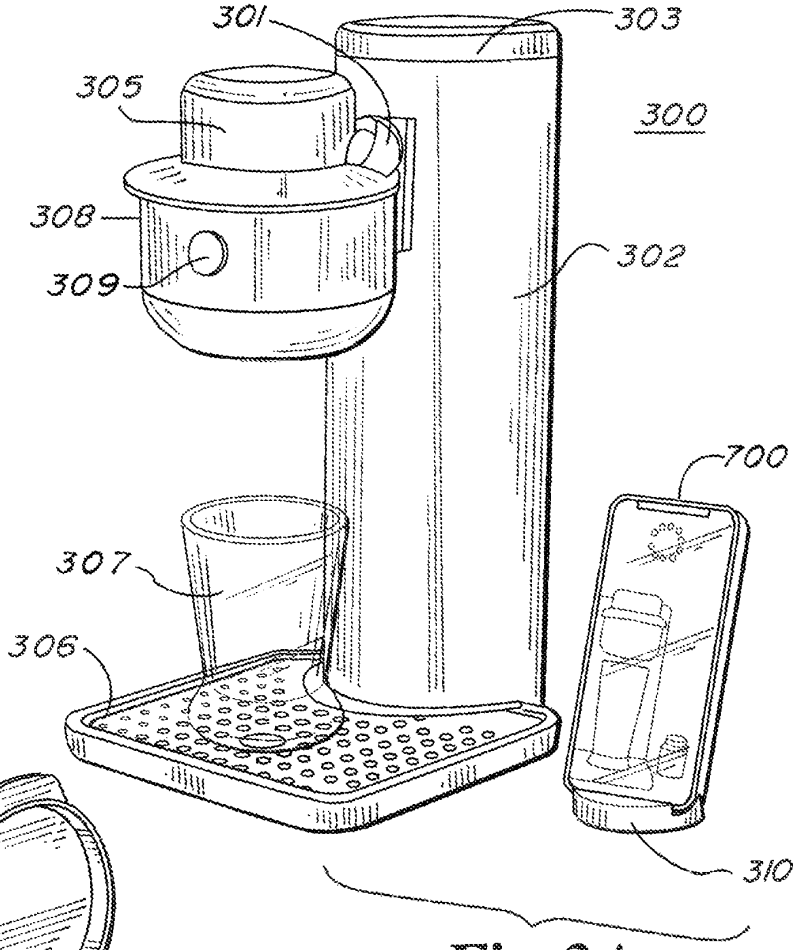
301
303
305
300
308
302
309
700
307
306
310

Fig.3A

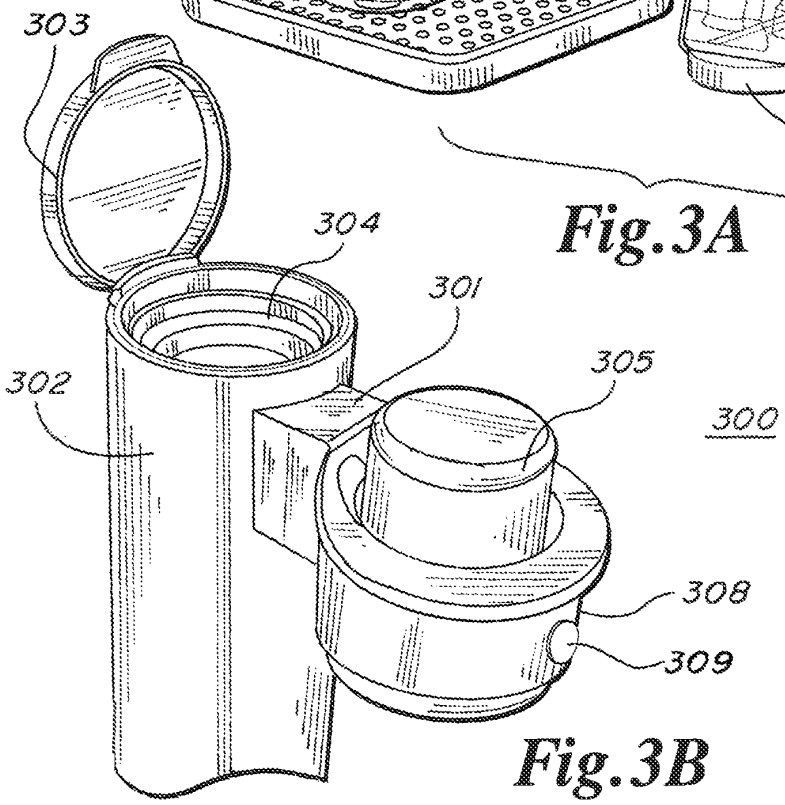
303
304
301
305
302
300
308
309

Fig.3B

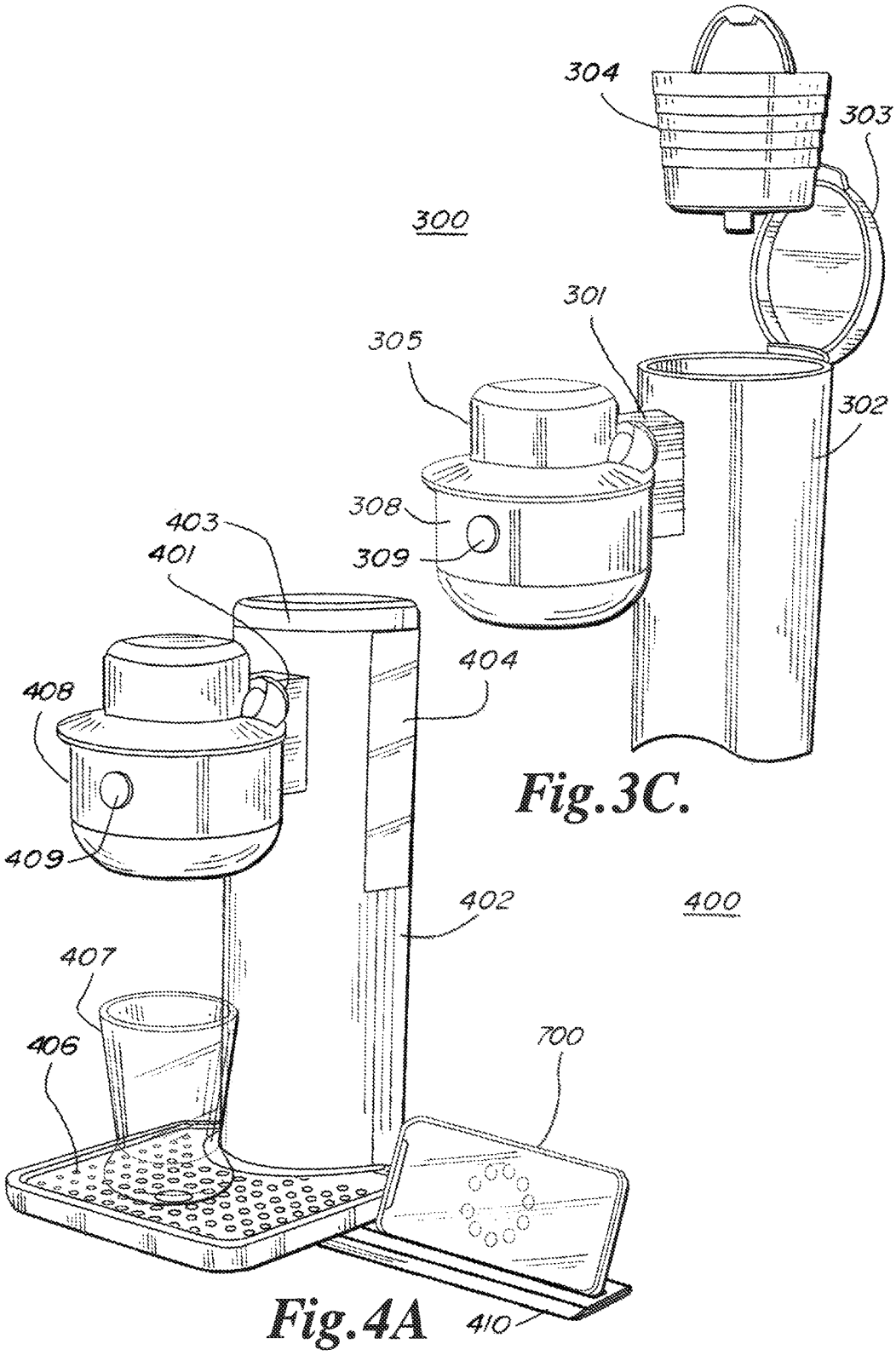
304
303
300
301
305
302
308
309
403
401
404
408
409
402
400
407
406
700
410

Fig.3C.

Fig.4A

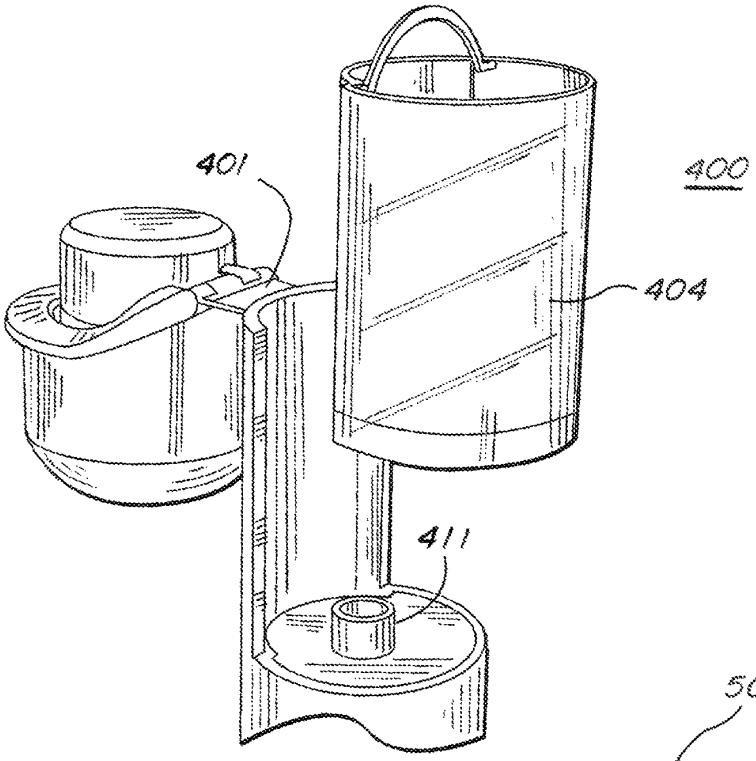

Fig.4B

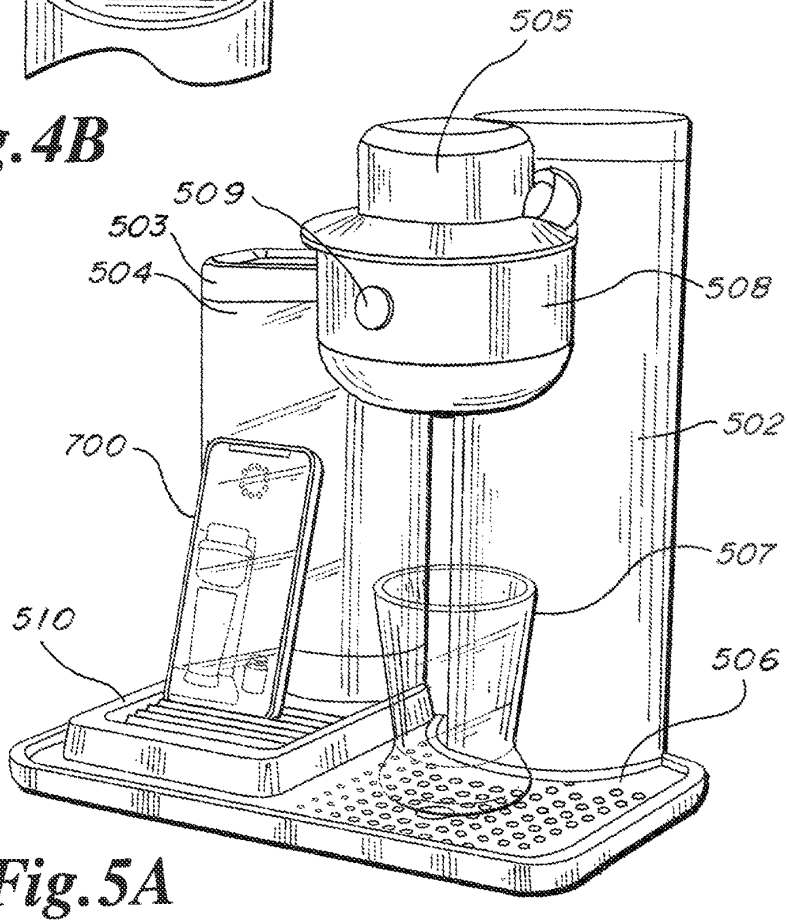

Fig.5A

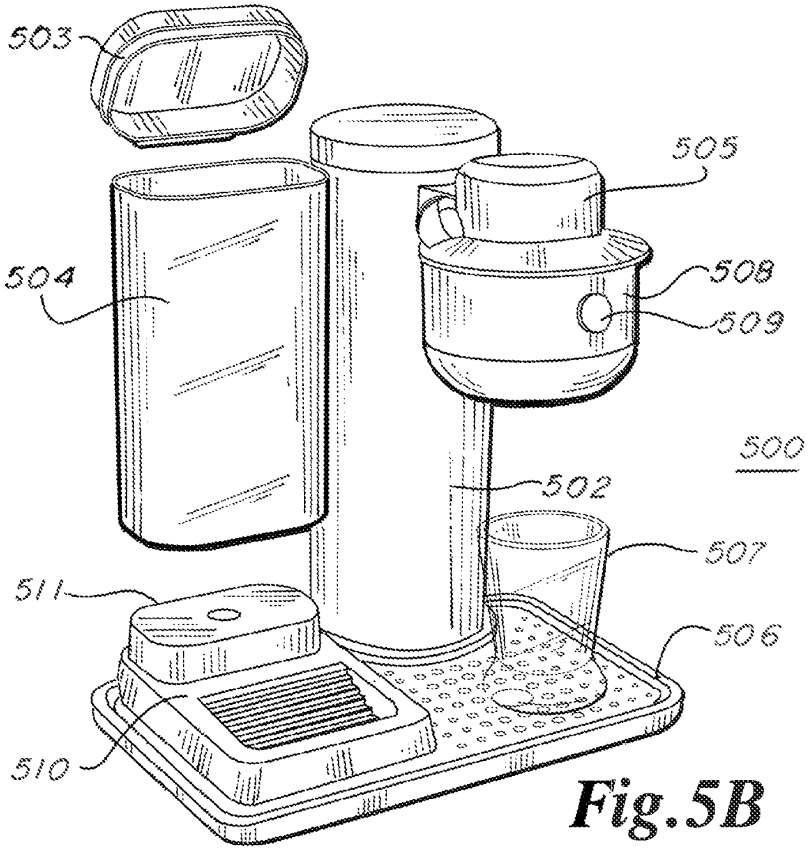

Fig.5B

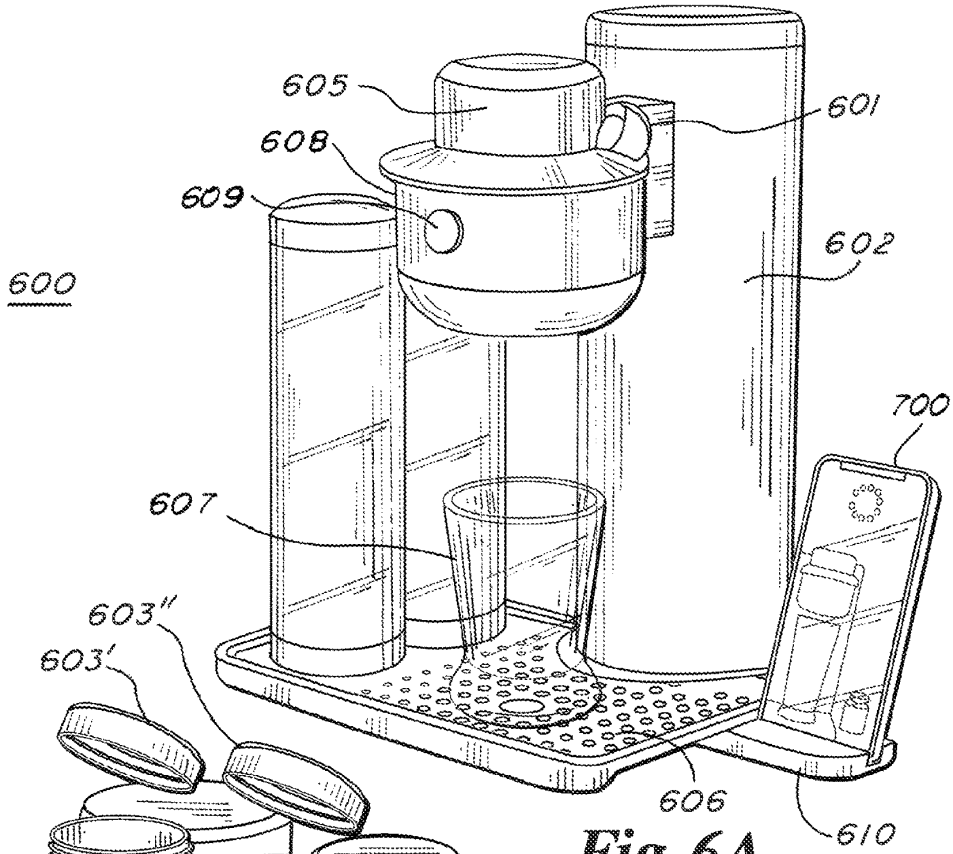
605
601
608
609
602
600
700
607
606
610

Fig. 6A

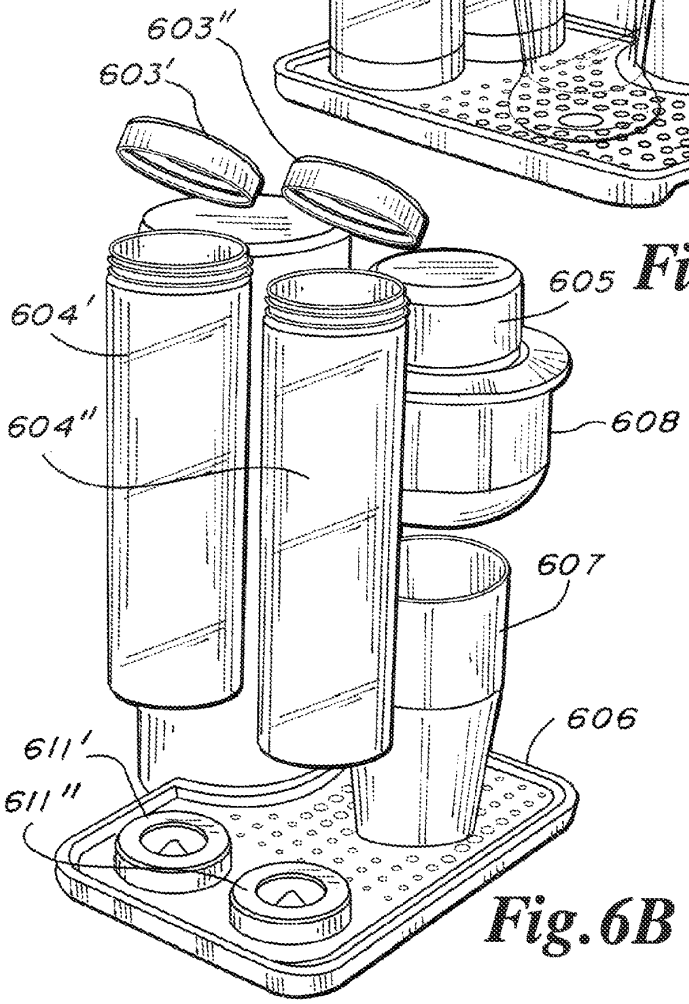
603''
603'
605
604'
604''
608
600
607
606
611'
611''

Fig. 6B

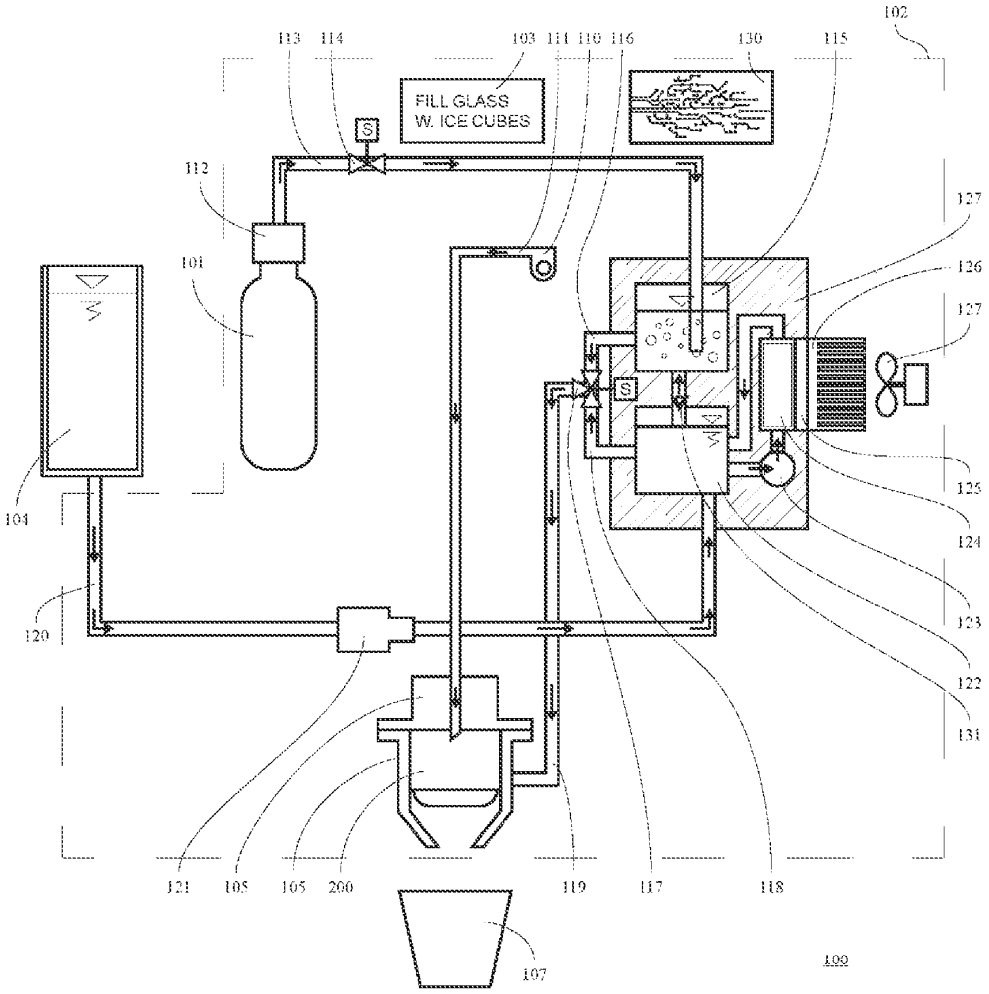

Fig. 7
(Prior Art)

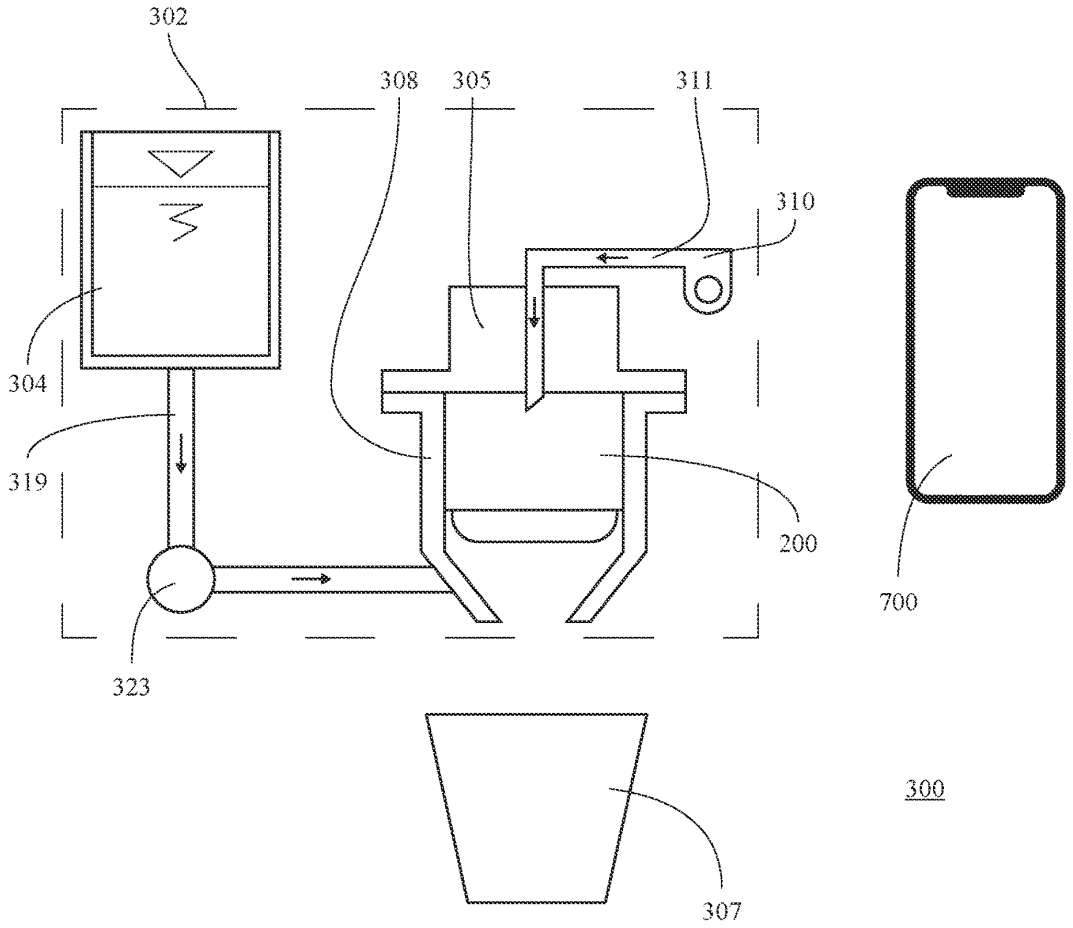

Fig. 8

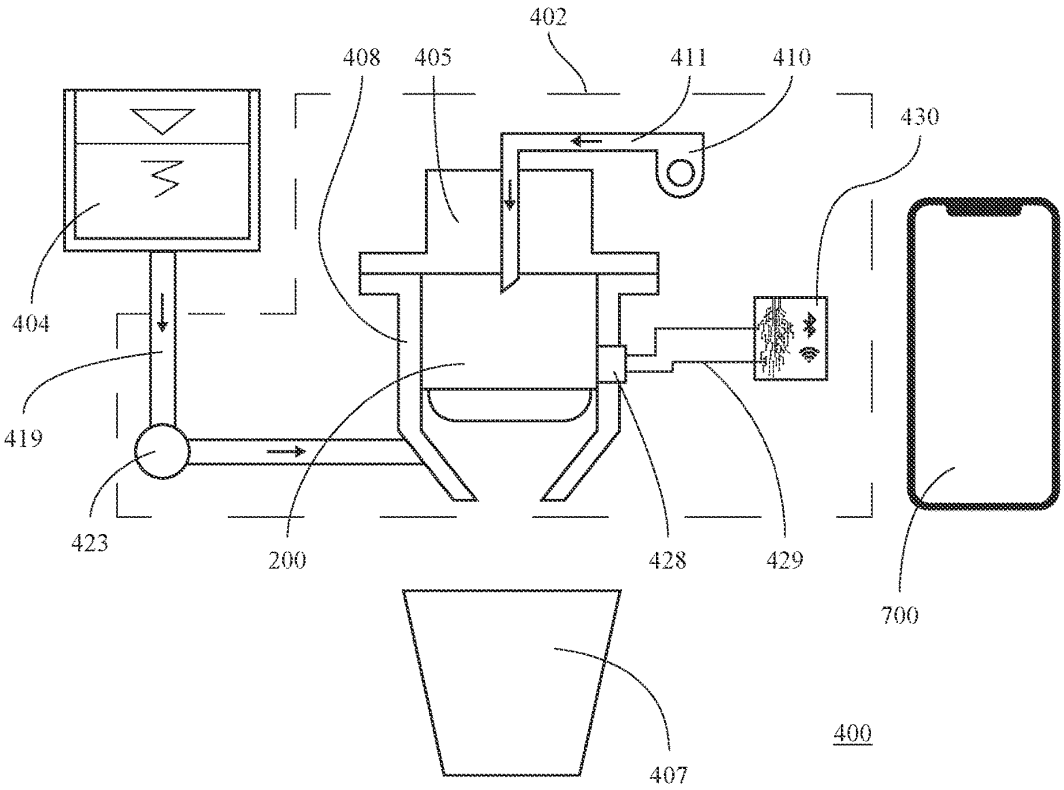

Fig. 9

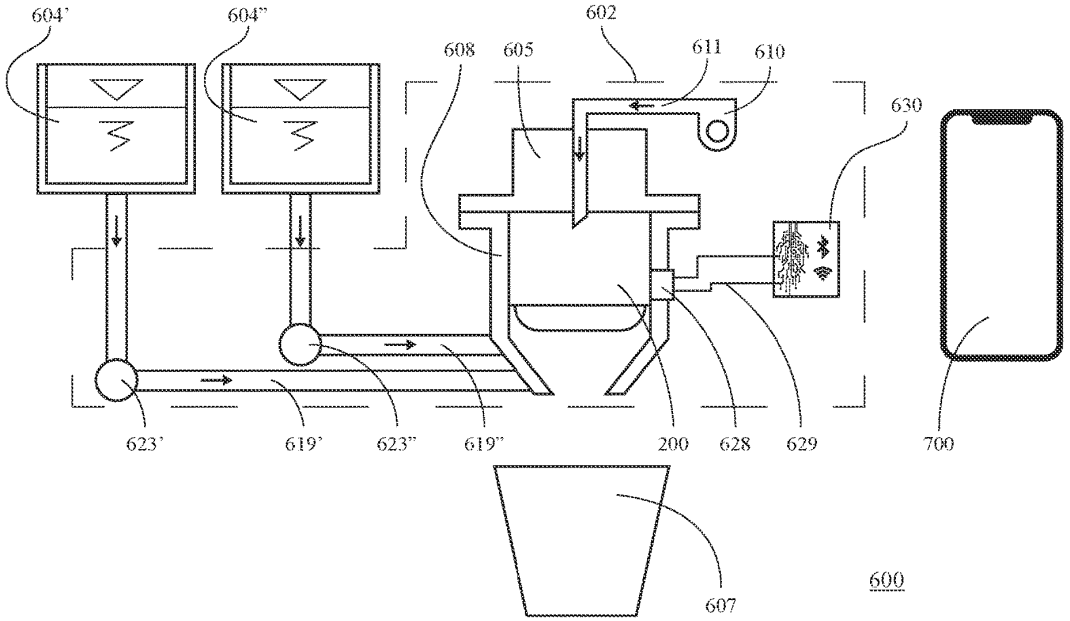
604'
604"
608
605
602
611
610
630
623'
619'
623"
619"
200
628
629
700
607
600

Fig. 10

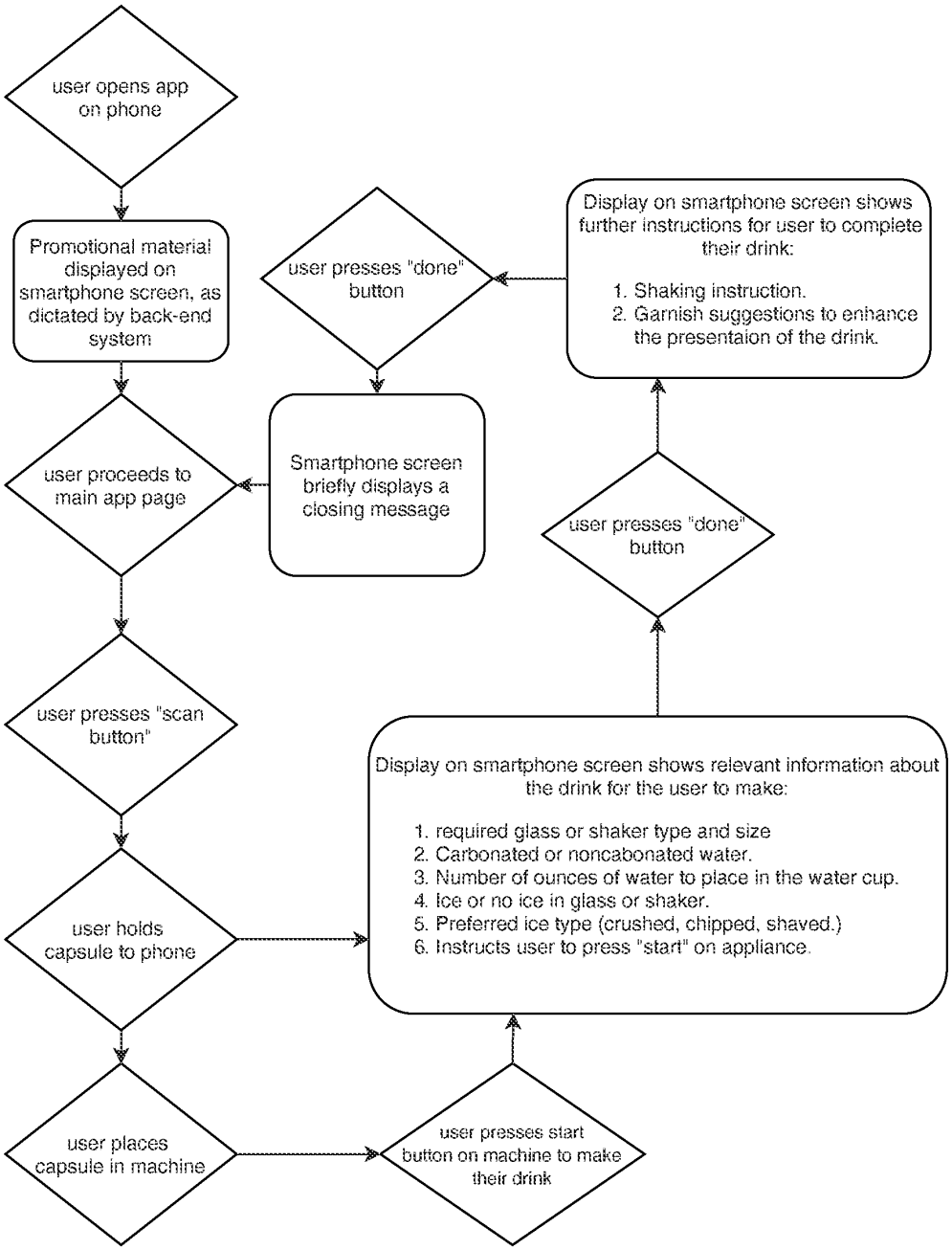
user opens app on phone
Promotional material displayed on smartphone screen, as dictated by back-end system
user proceeds to main app page
user presses "scan button"
user holds capsule to phone
user places capsule in machine
user presses start button on machine to make their drink
Display on smartphone screen shows relevant information about the drink for the user to make:
1. required glass or shaker type and size
2. Carbonated or noncabonated water.
3. Number of ounces of water to place in the water cup.
4. Ice or no ice in glass or shaker.
5. Preferred ice type (crushed, chipped, shaved.)
6. Instructs user to press "start" on appliance.
user presses "done" button
Display on smartphone screen shows further instructions for user to complete their drink:
1. Shaking instruction.
2. Garnish suggestions to enhance the presentaion of the drink.
user presses "done" button
Smartphone screen briefly displays a closing message

Fig. 11

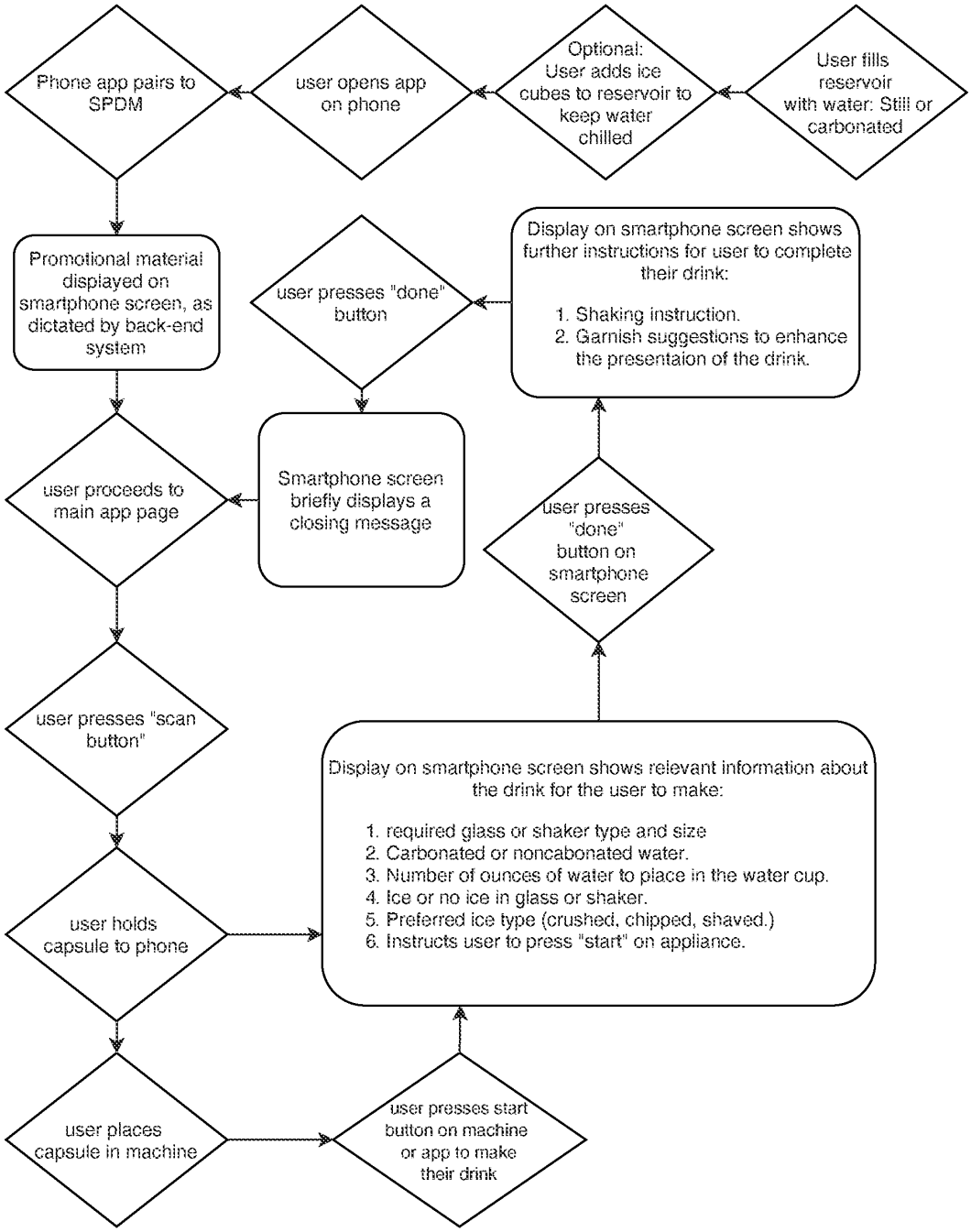
Phone app pairs to SPDM
user opens app on phone
Optional: User adds ice cubes to reservoir to keep water chilled
User fills reservoir with water: Still or carbonated
Promotional material displayed on smartphone screen, as dictated by back-end system
user presses "done" button
Display on smartphone screen shows further instructions for user to complete their drink:
1. Shaking instruction.
2. Garnish suggestions to enhance the presentaion of the drink.
user proceeds to main app page
Smartphone screen briefly displays a closing message
user presses "done" button on smartphone screen
user presses "scan button"
Display on smartphone screen shows relevant information about the drink for the user to make:
1. required glass or shaker type and size
2. Carbonated or noncabonated water.
3. Number of ounces of water to place in the water cup.
4. Ice or no ice in glass or shaker.
5. Preferred ice type (crushed, chipped, shaved.)
6. Instructs user to press "start" on appliance.
user holds capsule to phone
user places capsule in machine
user presses start button on machine or app to make their drink

Fig. 12

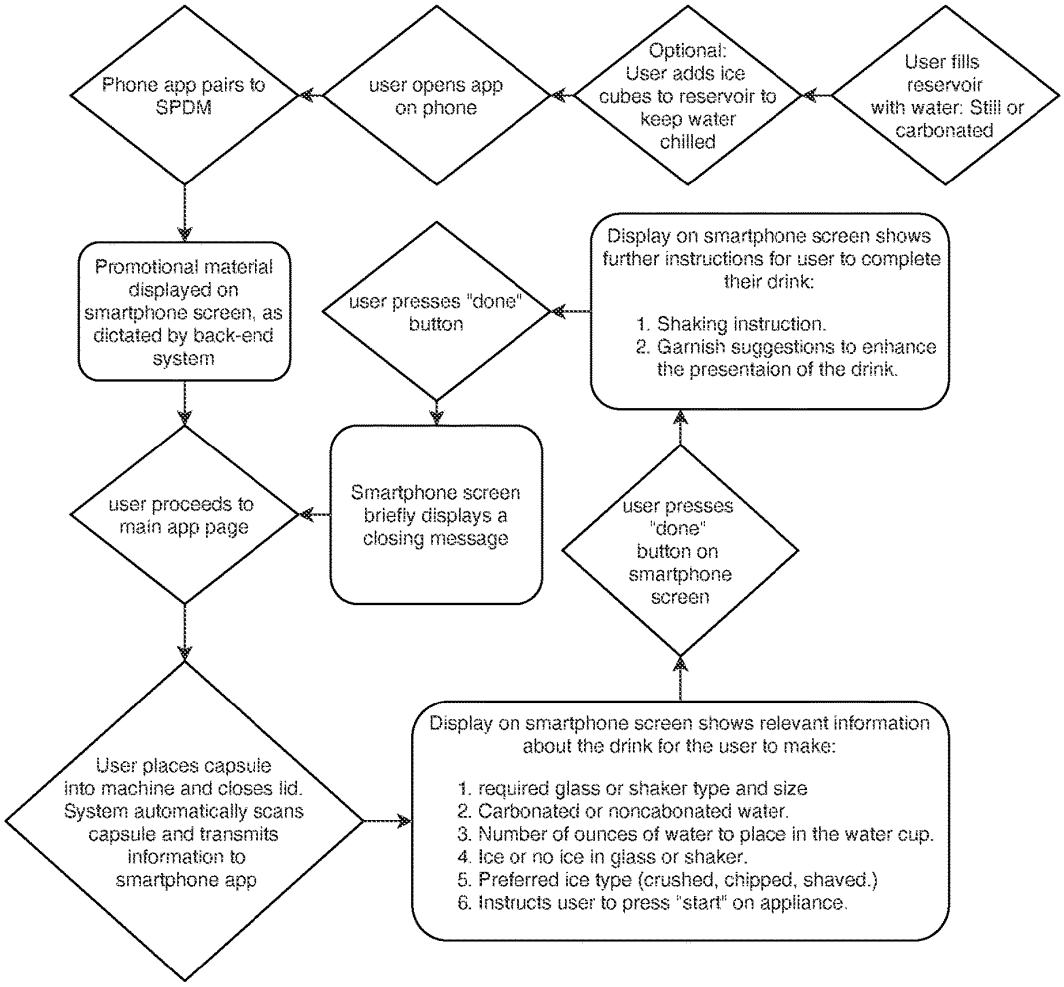
User fills reservoir with water: Still or carbonated
Optional: User adds ice cubes to reservoir to keep water chilled
user opens app on phone
Phone app pairs to SPDM
Promotional material displayed on smartphone screen, as dictated by back-end system
user proceeds to main app page
User places capsule into machine and closes lid. System automatically scans capsule and transmits information to smartphone app
Display on smartphone screen shows relevant information about the drink for the user to make:
1. required glass or shaker type and size
2. Carbonated or noncabonated water.
3. Number of ounces of water to place in the water cup.
4. Ice or no ice in glass or shaker.
5. Preferred ice type (crushed, chipped, shaved.)
6. Instructs user to press "start" on appliance.
user presses "done" button on smartphone screen
Display on smartphone screen shows further instructions for user to complete their drink:
1. Shaking instruction.
2. Garnish suggestions to enhance the presentaion of the drink.
user presses "done" button
Smartphone screen briefly displays a closing message

Fig. 13

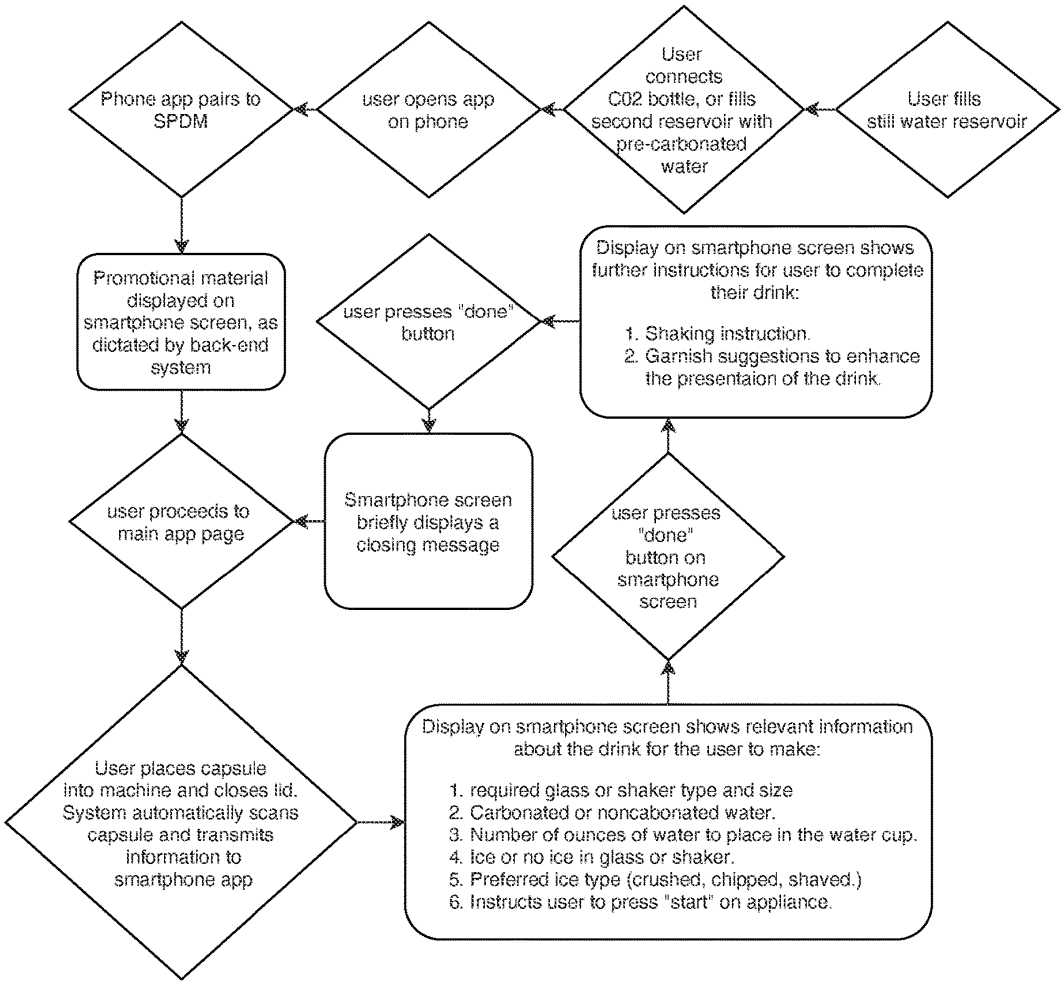
Phone app pairs to SPDM
user opens app on phone
User connects C02 bottle, or fills second reservoir with pre-carbonated water
User fills still water reservoir
Promotional material displayed on smartphone screen, as dictated by back-end system
user presses "done" button
Display on smartphone screen shows further instructions for user to complete their drink:
1. Shaking instruction.
2. Garnish suggestions to enhance the presentaion of the drink.
user proceeds to main app page
Smartphone screen briefly displays a closing message
user presses "done" button on smartphone screen
User places capsule into machine and closes lid. System automatically scans capsule and transmits information to smartphone app
Display on smartphone screen shows relevant information about the drink for the user to make:
1. required glass or shaker type and size
2. Carbonated or noncabonated water.
3. Number of ounces of water to place in the water cup.
4. Ice or no ice in glass or shaker.
5. Preferred ice type (crushed, chipped, shaved.)
6. Instructs user to press "start" on appliance.

Fig. 14

SMART PHONE DRINK MAKER

FIELD OF THE INVENTION

This invention relates to beverage system including a beverage appliance apparatus and a beverage container where the functions and user interface required for creating beverages may be activated and controlled through a pre-programmed App (an algorithm created specifically for the beverage system), residing external to, and wirelessly communicating with the apparatus.

BACKGROUND

The recent COVID-19 pandemic created a new reality in many established parts of the economy. Nowhere has the impact been greater than in the restaurant and bar segment. As a result of this more people were looking to substitute their visit to the bar with preparing mixed drinks at home. At present there are several appliances available to the consumer in the US, and there are most likely many more of these type appliances available in other countries. Many of the beverage appliances in the US market at the present are capsule-based and some use pre-mixed concentrates or other manners to provide the alcohol and mixes.

The appliances presently available to the consumer in the US carry a price tag that ranges from $200 and up. For the most part, these appliances are relatively large and occupy large amount of countertop space, be it in the kitchen, the wet bar, or a man-cave. Amongst the more popular and heavily advertised product is the Drinkworks® Home Bar by Keurig® being offered for sale at a price range of $250 to $299. To create a mixed beverage the user would have to place a beverage container into the appliance, retailing at an average price of $4.00.

While it is understood that there are other types of automatic beverage appliances available in the US market it was determined to use The Drinkworks® Home Bar appliance and beverage containers as the representative prior art, as it is known to be the dominant system in the US market, and the system offers many user benefits which drive the demand for the appliance, some of these user-benefits include:

a. Speed—The machine takes about 1 minute to produce a mixed drink.

b. Variety—The user can create a variety of drinks without having to purchase various liquors, mixes, and flavorings.

c. Quality—User feedback indicates a high level of satisfaction with the quality of the drink.

d. Convenience—User can produce any mixed beverage effortlessly.

e. Simplicity—User need not remember beverage recipes or look them up.

f. Space savings—User need not stock alcohol, mixes, and other additions.

g. Pride of ownership—The appliance is impressive and attractive.

h. Recognizable brand—Drinkworks® Home Bar is marketed under the well-known Keurig® brand.

The business model being followed is based on the long-term revenue being generated by the sale of consumables (the beverage containers in the case of the Drinkworks® Home Bar). It should be based on offering the beverage appliance at an attractive price and relying on the profit to be generated from beverage containers sales. Due to the high manufacturing cost of the appliance it is offered to the consumer at a price point of $250, which understandably

creates a barrier to broaden the customer base needed to increase the sales of the consumables, namely the beverage containers.

Size and product footprint are other factors that might create a barrier to broaden the customer base of the beverage appliance. The expected potential customer typically lives in an urban environment with limited space that would not support another large appliance, especially where the product might be used daily, and therefore would not be put away after each use.

Lastly, while the beverage appliance offers the user all the benefits listed above, it has some inherent drawbacks such as a long cooldown time, the need to purchase CO2 containers, and the need for routine draining and cleaning.

Therefore, a strong case can be made for an appliance offering all, or most of, the user benefits of the existing Drinkworks® Home Bar at a lower price point. This is especially true if such product had a small footprint, requiring minimum maintenance, and needed no cooldown time. These criteria could be met if the appliance includes just the bare minimum of the components required to extract the content from the beverage container and excludes carbonation and refrigeration. Further savings could be made if the control functions are stored in a mobile app rather than a PCB as is the case with the current product. While saving a great deal of cost, it also stands to reason that a beverage appliance that is controlled through a smart phone app would appeal to a broad segment of the market, particularly tech savvy individuals.

The foregoing examples of the related art and limitations related therewith are intended to be illustrative and not exclusive. The limitations of the related art will become apparent to those skilled in the art upon a reading of the specification and a study of the drawings.

SUMMARY OF THE INVENTION

One aspect of the present invention is to provide a low-cost, small footprint, easy to use beverage appliance which communicates with an App that may be downloaded to the user's smart phone or tablet. The beverage appliance is designed to be used in conjunction with beverage containers such as the Drinkworks® beverage containers.

The invention may be embodied in or practiced using a beverage system comprising: a beverage container having a beverage material sealed therein; and a beverage appliance configured to receive the beverage container and produce a beverage from the beverage material, the beverage appliance comprising a precursor supply and a dispensing assembly, the dispensing assembly configured to combine the beverage material with the precursor supply, wherein the beverage container further comprises indicia specific to the content of the beverage material sealed therein, and the beverage system further comprising a specifically programmed downloadable application, whereupon scanning the indicia the pre-programmed application is prompted to interact with the user and may also interact with the beverage appliance to create and dispense into a user container a beverage specific to the indicia of said beverage container.

BRIEF DESCRIPTION OF THE DRAWINGS

The foregoing summary, as well as the following detailed description of an exemplary embodiment, will be better understood when read in conjunction with the appended drawings.

FIG. **1**A is an isometric of a beverage appliance according to the prior art;

FIG. **1**B is an isometric of a beverage appliance according to the prior art with the beverage compartment lid shown in an open position and the beverage container partially visible;

FIG. **2** is an isometric view of a beverage container;

FIG. **3**A is a left isometric view of a first embodiment of an apparatus according to the invention;

FIG. **3**B is a partial right isometric view of the apparatus of FIG. **3**A with its precursor supply lid opened;

FIG. **3**C is a partial left isometric view of the apparatus of FIG. **3**A with its precursor container lifted away;

FIG. **4**A is a left isometric view of a second embodiment of an apparatus according to the invention;

FIG. **4**B is a partial right isometric view of the apparatus of FIG. **4**A with its lid removed and its precursor container lifted away;

FIG. **5**A is a left isometric view of a third embodiment of an apparatus according to the invention;

FIG. **5**B is a right isometric view of the apparatus of FIG. **5**A with its lid and precursor container lifted away;

FIG. **6**A is a left isometric view of a fourth embodiment of an apparatus according to the invention;

FIG. **6**B is a left isometric view of the apparatus of FIG. **6**A with its lids and precursor containers lifted away;

FIG. **7** is a schematic illustration of the beverage appliance according to the prior art;

FIG. **8** is a schematic illustration of the beverage appliance according to the first embodiment;

FIG. **9** is a schematic illustration of the beverage appliance according to the second and third embodiments;

FIG. **10** is a schematic illustration of the beverage appliance according to the fourth embodiment;

FIG. **11** is a flow chart of the process required to produce a beverage according to the first embodiment according to the invention;

FIG. **12** is a flow chart of the process required to produce a beverage according to the second embodiment according to the invention;

FIG. **13** is a flow chart of the process required to produce a beverage according to the third embodiment according to the invention; and

FIG. **14** is a flow chart of the process required to produce a beverage according to the fourth embodiment according to the invention.

DETAILED DESCRIPTION OF EXEMPLARY EMBODIMENTS

FIGS. **1**A and **1**B illustrate a beverage appliance **100** according to the prior art, it includes a housing **102** that encloses all the components and the controls required for the operation of the machine, a reservoir **104** that holds a liquid (e.g., water) used to form a beverage, and a drip tray **106** that supports a user container **107** for receiving a dispensed beverage. The reservoir **104** can be removable from the housing **102**, such that a user can fill the reservoir **104** with a beverage precursor liquid, such as water, that is used to form a beverage dispensed at a dispensing station **108** into a user container **107**. The reservoir **104** can include a movable lid to facilitate a user in filling the reservoir **104** with the precursor liquid. The dispensing station includes a hingeable lid **105** for placement and removal of a beverage container **200**.

The various components enclosed within the housing **102** include for example: a hi pressure pump to move precursor liquid from the reservoir **104** to a carbonation system, where the precursor liquid can be carbonated, via a gas, supplied by a pressurized canister or bottle **101**, such as a carbon dioxide canister or bottle, located within the housing **102**. The precursor liquid is chilled by a cooling system. The precursor liquid is moved to the dispensing station **108** and dispensed into the user container **107**. To generate a desired beverage, the carbonated liquid can be mixed with a beverage material contained in a beverage container **200** shown in FIG. **1**B by introducing gas or fluid into the beverage container under pressure.

Control of the beverage appliance **100** and its components are performed by control circuitry which is enclosed entirely within the housing **102**, which includes a programmed general purpose computer and/or other data processing devices along with suitable software or other operating instructions, one or more memories (including non-transient storage media that can store software and/or other operating instructions), a power supply for the control circuitry and/or other system components, temperature and liquid level sensors, pressure sensors, RFID interrogation devices or other machine readable indicia readers (such as those used to read and recognize alphanumeric text, barcodes, security inks, etc.), input/output interfaces (e.g., such as a user interface to display information to a user and/or receive input from a user), communication buses or other links, a display **103** located on the top front portion of the housing for ease or reading by the user, switches, relays, triacs, motors, mechanical linkages and/or actuators, and/or other components necessary to perform desired input/output or other functions of the beverage machine **100**.

The beverage appliance **100** according to the prior art is designed to receive a beverage container **200**, an isometric view of the exterior of which is shown in FIG. **2**. The beverage container **200** is configured to hold a target volume of a beverage material **210**. The beverage container **200** is shown in FIG. **2** having a body **203** defining a substantially cylindrical shape including a top portion **201** and a bottom portion **202** for holding a volume of the beverage material **210**. The bottom portion **202** includes a recess **207** designed to engage a mating part in the dispensing station **108**, also shown is an aperture **208** within the recess **207** which aligns with the precursor liquid delivery tube. also shown is a recess **206** at the center of the bottom portions in which precursor and beverage material mix ahead of being delivered into the user container **107**. Beverage container **200** also includes indicia **209** readable by the appliance internal controller.

It has been stated above that a strong case can be made for an appliance offering all, or most of, the user benefits of the existing Drinkworks® Home Bar at a low manufacturing cost achieved by designing a system where the beverage appliance includes just the bare minimum of the components required to extract the content from the beverage container, excluding carbonation and refrigeration, eliminating the on-board user interface and the controls associated with it and the electronics required for controlling the rest of the functions of the appliance. All of which being accomplished through a dedicated downloadable app that may be accessed by the user and may communicate wirelessly with the appliance. In addition to the cost savings achievable, such an appliance would have a small footprint, require minimum maintenance, and no need for any cooldown time. It also stands to reason that a beverage appliance that is controlled through a smart phone app would appeal to a broad segment of the market, particularly tech-savvy individuals.

Four different embodiments of such a beverage system and beverage appliance according to the invention are described below in specific detail.

FIGS. **3**A, **3***b* and **3**C illustrate a first embodiment **300** of beverage appliance according to the invention, it includes a vertical cylindrical housing **302** that supports a dispensing station **308**, via a hollow bridge portion **301** serving as a conduit for air and precursor tubes required for the extraction of the beverage material **210** and for providing the precursor liquid for mixing with the beverage material prior to delivery into the user container **307**. The housing **302** is fixed to a wide base **306**, also serving as a drip tray and for placing a user container **307** to be filled with a beverage. The housing **302** encloses a graduated precursor container **304** that allowing the user to gauge the amount of precursor liquid (being carbonated, still, plain, or flavored) to be filled in correspondence with the beverage material chosen by the user. Also enclosed in the housing **302** is a pump, (not shown) for moving the precursor liquid from the precursor container to the dispensing station **308** and dispensed into the user container **307**, and an air pump (not shown) for pressurizing the beverage container **200** for dispensing the beverage material **210**, mixing it with the precursor liquid and delivering it by gravity into the user container **307**.

FIG. **3**A also shows a smart phone **700** with a screen simulating an image of an app which may provide the user with instructions for creating the beverage according to the content of the specific beverage container placed in the dispensing station. More details of the components of the first embodiment are being provided in FIG. **8**, while further information regarding the operation of the first embodiment is provided in the flow chart shown in FIG. **11**;

FIGS. **4**A and **4**B illustrate a second embodiment **400**, of beverage appliance according to the invention, it includes a vertical cylindrical housing **402** that supports a dispensing station **408**, via a hollow bridge portion **401** serving as a conduit for air and precursor tubes required for the extraction of the beverage material **210** and for providing the precursor liquid for mixing with the beverage material prior to delivery into the user container **407** and for electrical leads connecting a scanner to a control board. The housing **402** is fixed to a wide base **406**, also serving as a drip tray and for placing a user container **407** to be filled with a beverage. The housing **402** supports a precursor container **404** to be filled by the user with precursor liquid (being carbonated, still, plain, or flavored) in correspondence with the beverage material chosen by the user. Precursor container **404** is provided with a spring valve for dispensing precursor liquid which remains closed until the precursor container is seated in place, and engaging connector **411** designed to open the spring valve in a manner known in the art. Also enclosed in the housing **402** is a small circuit board (not shown) for controlling the air and liquid pumps, and for transmitting wirelessly the information scanned from the indicis **209** on the beverage cartridge **200** and lastly, housing **402** also encloses a liquid pump, (not shown) for moving the precursor liquid from the precursor container to the dispensing station **308** and dispensed into the user container **407**, and an air pump (not shown) for pressurizing the beverage container **200** for dispensing the beverage material **210**, mixing it with the precursor liquid and delivering it by gravity into the user container **407**.

FIG. **4**A also shows a smart phone **700** with a screen simulating an image of an app which may provide the user with instructions for creating the beverage according to the content of beverage container placed in the dispensing station and for controlling the air and precursor and air pumps in accordance with the indices **209** on the beverage cartridge **200**.

More details of the components of the first embodiment are being provided in FIG. **9**, while further information regarding the operation of the first embodiment is provided in the flow chart shown in FIG. **12**;

FIGS. **5**A and **5**B illustrate a third embodiment **500**, of beverage appliance according to the invention, it includes a vertical cylindrical housing **502** that supports a dispensing station **508**, via a hollow bridge portion **501** serving as a conduit for air tubes and precursor tubes required for the extraction of the beverage material **210** and for providing the precursor liquid for mixing with the beverage material prior to delivery into the user container **507** and for electrical leads connecting a scanner to a control board. The housing **502** is fixed to a wide base **506**, also serving as a drip tray and for placing a user container **507** to be filled with a beverage. The base **506** also supports structure **510** for supporting a precursor container **504** to be filled by the user with precursor liquid (being carbonated, still, plain, or flavored) in correspondence with the beverage material chosen by the user. Precursor container is provided with a lid **503** and with a spring valve which remails closed until it is being seated in place, and engaging connector **511** designed to open the spring valve in a manner known in the art. Housing **502** encloses a small circuit board (not shown) for controlling the air and liquid pumps, and for transmitting wirelessly the information scanned from the indicis **209** on the beverage cartridge **200** and lastly, housing **502** also encloses a pump, (not shown) for moving the precursor liquid from the precursor container **504** to the dispensing station **308** and dispensed into the user container **507**, and an air pump (not shown) for pressurizing the beverage container **200** for dispensing the beverage material **210**, mixing it with the precursor liquid and delivering it by gravity into the user container **507**.

FIG. **5**A also shows a smart phone **700** with a screen simulating an image of an app which may provide the user with instructions for creating the beverage according to the content of beverage container placed in the dispensing station and for controlling the air pump and precursor pump in accordance with the indices **209** on the beverage cartridge **200**.

More details of the components of the third embodiment are being provided in FIG. **9**, while further information regarding the operation of the first embodiment is provided in the flow chart shown in FIG. **13**;

FIGS. **6**A and **6**B illustrate a fourth embodiment **600**, of beverage appliance according to the invention, it includes a vertical cylindrical housing **602** that supports a dispensing station **608**, via a hollow bridge portion **601** serving as a conduit for air tube and liquid tubes required for the extraction of the beverage material **210** for providing the precursor liquid for mixing with the beverage material prior to delivery into the user container **607** and for electrical leads connecting a scanner to a control board. The housing **602** is fixed to a wide base **606**, also serving as a drip tray and for placing a user container **607** to be filled with a beverage. The base **606** also supports liquid inlet mounds **611'** and **611"** for supporting precursor containers **604'** and **604"** to be filled by the user with alternate precursor liquids (such as one filled with still the other with carbonated water, or one being filled with chilled precursor the other with room-temp water) in correspondence with the beverage materials chosen by the user. Precursor containers are provided with lids **603'** and **603"** intended to be tightly sealed (to help prevent CO2 from

"escaping" from carbonated water). Each precursor container includes a spring valve for dispensing precursor liquid, which remails closed until it is seated in place and engaging connectors **611'** and **611"** designed to open the spring valve in a manner known in the art. Housing **602** encloses a small circuit board (not shown) for controlling the air and liquid pumps, and for transmitting wirelessly the information scanned from the indicis **209** on the beverage cartridge **200** and lastly, housing **602** also encloses a liquid pump, (not shown) for moving the precursor liquid from the precursor container **604** to the dispensing station **608** and dispensed into the user container **607**, and an air pump (not shown) for pressurizing the beverage container **200** for dispensing the beverage material **210**, mixing it with the precursor liquid and delivering it by gravity into the user container **607**.

FIG. **6**A also shows a smart phone **700** with a screen simulating an image of an app which may provide the user with instructions for creating the beverage according to the content of beverage container placed in the dispensing station and for controlling the air pump and precursor pump in accordance with the indices **209** on the beverage cartridge **200**.

More details of the components of the fourth embodiment are being provided in FIG. **10**, while further information regarding the operation of the first embodiment is provided in the flow chart shown in FIG. **14**;

Prior art beverage appliance is represented in FIG. **7** in a schematic format, where the housing **102** contains a precursor chilling and carbonating module consisting of two containers, one for still liquid **122**, and one for carbonated liquid **115** interconnected via a check valve **131**. Also included is a Thermo Electric Cooling module **125** connected on its cold side to a liquid chiller **124** and on its warm side to a heat sink **126**, cooled by a fan **127**. Liquid is continuously circulated between the still liquid container and the liquid chiller to maintain it at a temperature suited to achieve best carbonation results. Both the still liquid container and the carbonated liquid container have delivery lines **116** and **118** connected via a three-way solenoid valve **117** to line **119** for delivery of the precursor liquid to mix with the beverage liquid prior to being delivered into the user container. Carbonation is achieved through a source of CO2, for example a container **101** containing liquid CO2 where the gas is released through a pressure reduction valve **112** and piped through line **113** when solenoid valve **114** is commanded to open. The gas flows into container **115** where it mixes with liquid. It should be pointed out that both containers are maintained at an elevated pressure required for the carbonation process. After precursor liquid is dispensed from the precursor chilling and carbonation module for creating a beverage that amount of liquid must be replenished, by being delivered from the liquid container **104** via a high-pressure pump **121**. The entire precursor chilling and carbonation unit is maintained in a thermally insulated enclosure **127**. The beverage appliance further includes an air pump **110** and an airline **111** designed to pressurize the beverage container **200** to dispense the beverage material **210** through the bottom **206** of the beverage container for mixing with the precursor liquid as being dispensed into the user container.

The beverage appliance **100** according to the prior art must contain a very elaborate control circuit **130** to manage the operation of the appliance including the user interface **103**, used to direct and instruct the user what type of user container to use, whether to place ice in the user container, what garnishes to add to the drink, and others.

It would be apparent to a person skilled in the art that the components and the controls required for the operation of the beverage appliance according to the prior are expensive and require a large enclosure to be contained.

The first exemplary embodiment is represented in FIG. **8** in a schematic format, where the housing **302** contains a graduated precursor liquid container **304** which is connected via a liquid line **319** and a liquid pump **323** to the beverage enclosure **308**, for the precursor liquid to mix with the beverage material prior to being delivered to the user container **307**. Also includes an air pump **310** and an airline **311** designed to pressurize the beverage container **200** to dispense the beverage material **210** through the bottom **206** of the beverage container for mixing with the precursor liquid prior to being dispensed into the user container.

The entire user interface is accomplished through the app on the smart phone **700**. The app is programmed to initially prompt the user to take a picture of the indices **209** on the beverage cartridge **200**. The picture is then processed by the program to identify the beverage cartridge being use and to initiate the relevant user interface used to direct and instruct the user as to the amount and type of precursor liquid to place in the precursor container **304** what type of user container **307** to use, whether to place ice in the user container, what garnishes to add to the drink, and others and to instructs the user when to press the on off button **309** to start and stop the beverage making process.

Due to its compactness, the minimum power required by the beverage appliance according to the first embodiment of the invention it could be designed as a battery-operated apparatus, and thereby usable while camping, tailgating, or at poolside. Alternately, it could be used at home by being plugged into low-voltage power supply, thereby being classified by the electrical approval authorities as a low voltage appliance, being exempt from the costly and time-consuming safety approval testing.

Some of the advantages of the beverage appliance according to the first embodiment over the prior art include: no need for user to wait for the system to cool down, or to drain and clean the unit, as no precursor liquid remains in the unit at the end of the cycle. There is no need to purchase and exchange CO-2 canisters. The only extra step is to fill the precursor cup before each use.

It would be apparent to a person skilled in the art that the few components required for the operation of the beverage appliance according to the first embodiment of the invention are far less expensive and require a smaller enclosure than the prior art.

The second and the third exemplary embodiments are represented in FIG. **9** in a schematic format, where the housing **402** contains a liquid transfer system consisting of a seat for the liquid container, a liquid line **419** and a liquid pump **423** to for delivery of precursor liquid from a precursor liquid container **404** to the beverage enclosure **408**, for the precursor liquid to mix with the beverage material prior to being delivered to the user container **407**. Also includes an air pump **410** and an airline **411** designed to pressurize the beverage container **200** to dispense the beverage material **210** through the bottom **206** of the beverage container for mixing with the precursor liquid prior to being dispensed into the user container.

The entire user interface is accomplished through the app on the smart phone **700**, used to direct and instruct the user as to the type of precursor liquid to place in the precursor container **404** what type of user container **307** to use, whether to place ice in the user container, what garnishes to add to the drink, and others.

The control circuit **430** in the second and third embodiment consists of a scanner positioned to read the indices **209** of the beverage container **200**, to wirelessly transmit that information to the smart devices, such as the smart phone **700** for controlling a timing circuit which is part of the control circuit **430** to turn the air pump and the precursor pump on and off in accordance with the information provided by indices **209**.

Some of the advantages of the beverage appliance according to the second and third embodiments over the prior art include: no need for user to wait for the system to cool down, or to drain and clean the unit, as the only liquids remaining in the unit at the end of the cycle are in the precursor container **404**, which would be removed, empties and refilled at the start of a new cycle. There is no need to purchase and exchange CO-2 canisters.

It would be apparent to a person experienced in the art that the few components and minimal controls required for the operation of the beverage appliance according to the second and third embodiments of the invention, while being more elaborate than that in the first embodiment are far less expensive and require a smaller enclosure than the prior art.

The fourth exemplary embodiment is represented in FIG. **10** in a schematic format, where the housing **602** contains liquid lines **619'** and **619"** and two liquid pumps **623'** and **623"** for delivery of precursor liquid from two precursor liquid containers **604'** and **604"** to the beverage enclosure **608**, for the precursor liquid to mix with the beverage material prior to being delivered to the user container **607**. Housing **602** also includes an air pump **610** and an airline **611** designed to pressurize the beverage container **200** to dispense the beverage material **210** through the bottom **206** of the beverage container for mixing with the precursor liquid prior to being dispensed into the user container.

The objective of having two (or more) precursor containers was to facilitate the beverage appliance to create consecutively beverages that require, for example still precursor and carbonated precursor, by the appliance having one liquid container with still precursor and the other with carbonated precursor.

The entire user interface is accomplished through the app on the smart phone **700**, used to interact with the user by prompting answers to the following, for examples: what was the type of precursor liquid that was placed in liquid containers **604'** and **604"**? Also prompting to user to provide a specific type of user container **607**, whether to place ice in the user container, what garnishes to add to the drink, and others.

The control circuit **630** in the fourth embodiment consists of a scanner positioned to read the indices **209** of the beverage container **200**, to transmit that information to the smart devices, such as the smart phone **700** for controlling a timing circuit which is part of the control circuit **630** to turn the air pump and precursor pumps on and off in accordance with the information provided by indices **209**.

Some of the advantages of the beverage appliance according to the fourth embodiment over the prior art include: no need for user to wait for the system to cool down, or to drain and clean the unit, as the only liquids remaining in the unit at the end of the cycle are in the precursor containers **604'** and **604"**, which would be removed, empties and refilled at the start of a new cycle. There is no need to purchase and exchange CO-2 canisters.

It would be apparent to a person skilled in the art that the few components and minimal controls required for the operation of the beverage appliance according to the fourth embodiments of the invention, while being more elaborate than that in the first embodiment are far less expensive and require a smaller enclosure than the prior art.

FIG. **11** is a detailed flow chart describing the user interaction with the user interface displayed on the smart phone **700** screen as it relates to the first embodiment of the beverage appliance according to the invention. The flow chart is self-explanatory to persons of average skills in the art.

FIG. **12** is a detailed flow chart describing the user interaction with the user interface displayed on the smart phone **700** screen as it relates to the second embodiment of the beverage appliance according to the invention. The flow chart is self-explanatory to persons of average skills in the art.

FIG. **13** is a detailed flow chart describing the user interaction with the user interface displayed on the smart phone **700** screen as it relates to the third embodiment of the beverage appliance according to the invention. The flow chart is self-explanatory to persons of average skills in the art.

FIG. **14** is a detailed flow chart describing the user interaction with the user interface displayed on the smart phone **700** screen as it relates to the fourth embodiment of the beverage appliance according to the invention. The flow chart is self-explanatory to persons of average skills in the art.

The drawings and specifications outlined above demonstrate that it is possible to use the vast amount of logic present in contemporary smart phones in conjunction with a downloadable application as a replacement for most of the controls in a beverage appliance as per the prior art thereby reducing the cost and the size of the appliance it also clearly apparent that use of the mobile app is not only cost effective but can also enhance the user experience, by:

a. Being fun/engaging, especially to tech-savvy individuals
b. Adding a wow factor to the product
c. Enabling the user to customize beverages.
d. Being an effective reference guide to quickly create a beverage with minimal steps.

Smart Phone app can also provide extensive information about the drink, such as amount of alcohol in drink, calories, snack pairings, etc. In addition, use of smart phone for interaction with the beverage appliance may be password protected to prevent use by underage family members. Through IoT and e-commerce connectivity the App can also alert user to order more beverage containers, special offerings, generate orders and pay for purchase, etc.

It should be understood that while the invention has been shown and described with reference to the specific exemplary embodiments shown, various changes in form and detail may be made without departing from the spirit and scope of the invention, and that the invention should therefore only be limited according to the following claims, including all equivalent interpretation to which they are entitled.

We claim:

1. A beverage system comprising:

a beverage container having beverage material therein and an indicium specific thereto; and

a beverage appliance configured to receive the beverage container and a plurality of precursor supplies to enable the containment of a variety of precursor liquids each intended to interact with the beverage material to create a selected one of a variety of beverages, and a dispensing assembly, and a first controller; wherein the beverage appliance includes an indicium reader and a first transmitter/receiver, and is configured to combine the

beverage material with liquid from a selected one of the precursor supplies within the beverage container; and

a second controller including a second transmitter/receiver adapted for wireless communication with the first transmitter/receiver;

wherein scanning the indicium and transmittal of information specific thereto to the remote controller by the beverage appliance causes the remote controller to prompt wireless interaction between a user and the beverage appliance to cause the user to select a desired beverage, and such selection causes the beverage appliance to extract a selected liquid from a selected one of the precursor supplies, to cause mixing of that selected liquid with the beverages material to create the desired beverage and to cause the dispensing of the desired beverage.

2. The beverage system of claim **1** wherein the second controller enables user interaction to prompt user-selectable additional process instructions specific to user preferences.

3. The beverage system of claim **2** wherein the second controller is a smartphone.

4. The beverage system of claim **3** wherein the smartphone includes a mobile app.

5. The beverage system of claim **4** wherein the first controller and the smartphone both include Bluetooth® wireless capability and the wireless communication therebetween is by Bluetooth®.

6. The beverage system of claim **5** wherein the indicium is one of a readable code displayed on the outside of the beverage container and an RFID chip.

7. The beverage system of claim **6** wherein the plurality of precursor supplies includes carbonated and non-carbonated water reservoirs.

8. The beverage system of claim **7** in combination with a user container removably supportable by the beverage appliance and adapted to receive the dispensed beverage.

9. The combination of claim **8** wherein the first controller further includes a computer adapted to employ the received process instructions to effect control of the dispensing assembly.

10. The beverage system of claim **6** wherein the plurality of precursor supplies includes carbonated and non-carbonated water reservoirs.

11. The beverage system of claim **10** in combination with a user container removably supportable by the beverage appliance and adapted to receive the dispensed beverage.

12. The combination of claim **11** wherein the first controller further includes a computer adapted to employ the received process instructions to effect control of the dispensing assembly.

13. The beverage system of claim **1** wherein the indicium is one of a readable code displayed on an outside surface of the beverage container and an RFID chip.

14. A beverage system comprising:

a beverage container having a beverage material therein and an indicium specific thereto; and

a beverage appliance configured to receive the beverage container and a plurality of precursor supplies to enable the containment of a variety of precursor liquids each intended to interact with the beverage material to create a selected one of a variety of beverages, and a dispensing assembly, and a controller; wherein the beverage appliance includes an indicium reader and a first Bluetooth® transmitter/receiver, and is configured to combine the beverage material with liquid from a selected one of the precursor supplies within the beverage container; and

a smartphone including a mobile app and a second Bluetooth® transmitter/receiver adapted for wireless communication with the first Bluetooth® transmitter/receiver;

wherein scanning the indicium and transmittal of information specific thereto to the smartphone by the beverage appliance causes the smartphone to prompt wireless interaction between a user and the beverage appliance to cause the user to select a desired beverage, and such selection causes the beverage appliance to extract a selected liquid from a selected one of the precursor supplies, to cause mixing of that selected liquid with the beverages material to create the desired beverage, and to cause the dispensing of the desired beverage.

15. The beverage system of claim **14** wherein the mobile app enables user interaction to prompt user-selectable additional process instructions specific to user preferences.

16. The beverage system of claim **14** wherein the indicium is one of a readable code displayed on an outside surface of the beverage container and an RFID chip.

17. The beverage system of claim **16** wherein the plurality of precursor supplies includes carbonated and non-carbonated water reservoirs.

18. The beverage system of claim **17** in combination with a user container removably supportable by the beverage appliance and adapted to receive the dispensed beverage.

19. The combination of claim **18** wherein the controller further includes a computer adapted to employ the received process instructions to effect control of the dispensing assembly.

* * * * *