US 20050289195A1

(19) United States

(12) Patent Application Publication

(10) Pub. No.: US 2005/0289195 A1

(43) Pub. Date: Dec. 29, 2005

Lehtola et al.

(54) CENTRALLY CONTROLLED BACKUP FUNCTIONALITY

(76) Inventors: **Ari Lehtola**, Pirkkala (FI); **Tiina Partanen**, Tampere (FI); **Jouni Rapakko**, Kylmakoski (FI)

Correspondence Address:
WARE FRESSOLA VAN DER SLUYS & ADOLPHSON, LLP
BRADFORD GREEN BUILDING 5
755 MAIN STREET, P O BOX 224
MONROE, CT 06468 (US)

(21) Appl. No.: 10/875,079

(22) Filed: Jun. 23, 2004

Publication Classification

(51) Int. Cl.[7] G06F 12/00

(52) U.S. Cl. 707/204

(57) ABSTRACT

A method and mobile device are presented for centrally controlling backup functionality, so that parties such as backup devices will efficiently be informed how data content should be backed up from or restored to the mobile device. The mobile device exposes to a party rules for backing up or restoring data content, and those rules are not just for the party, but also are for other parties including the mobile device itself. The rules are contained in a list formatted in extensible markup language (XML). If the party is an external party, the mobile device provides an object exchange protocol (OBEX) capability object in response to the party fetching that object. The OBEX capability object describes capabilities of the mobile device, and is for use by the external party in order to access the list of rules via the mobile device exposing those rules to the external party.

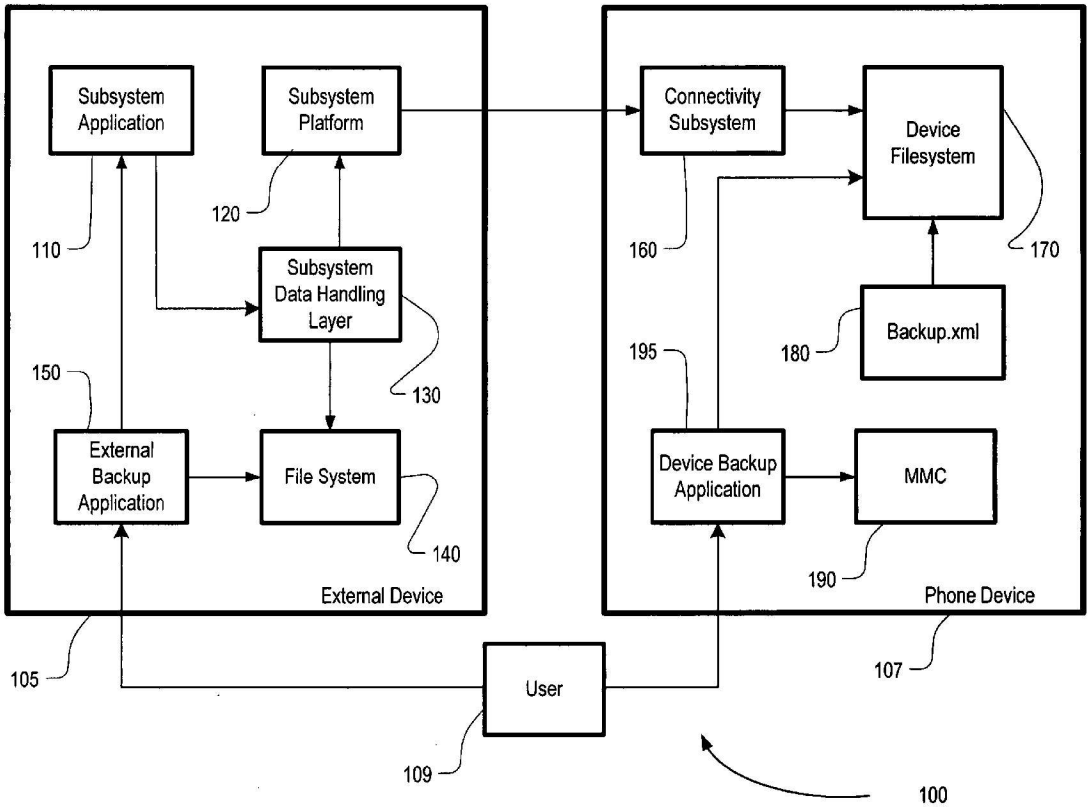

MICROSOFT CORP.
EXHIBIT 1055

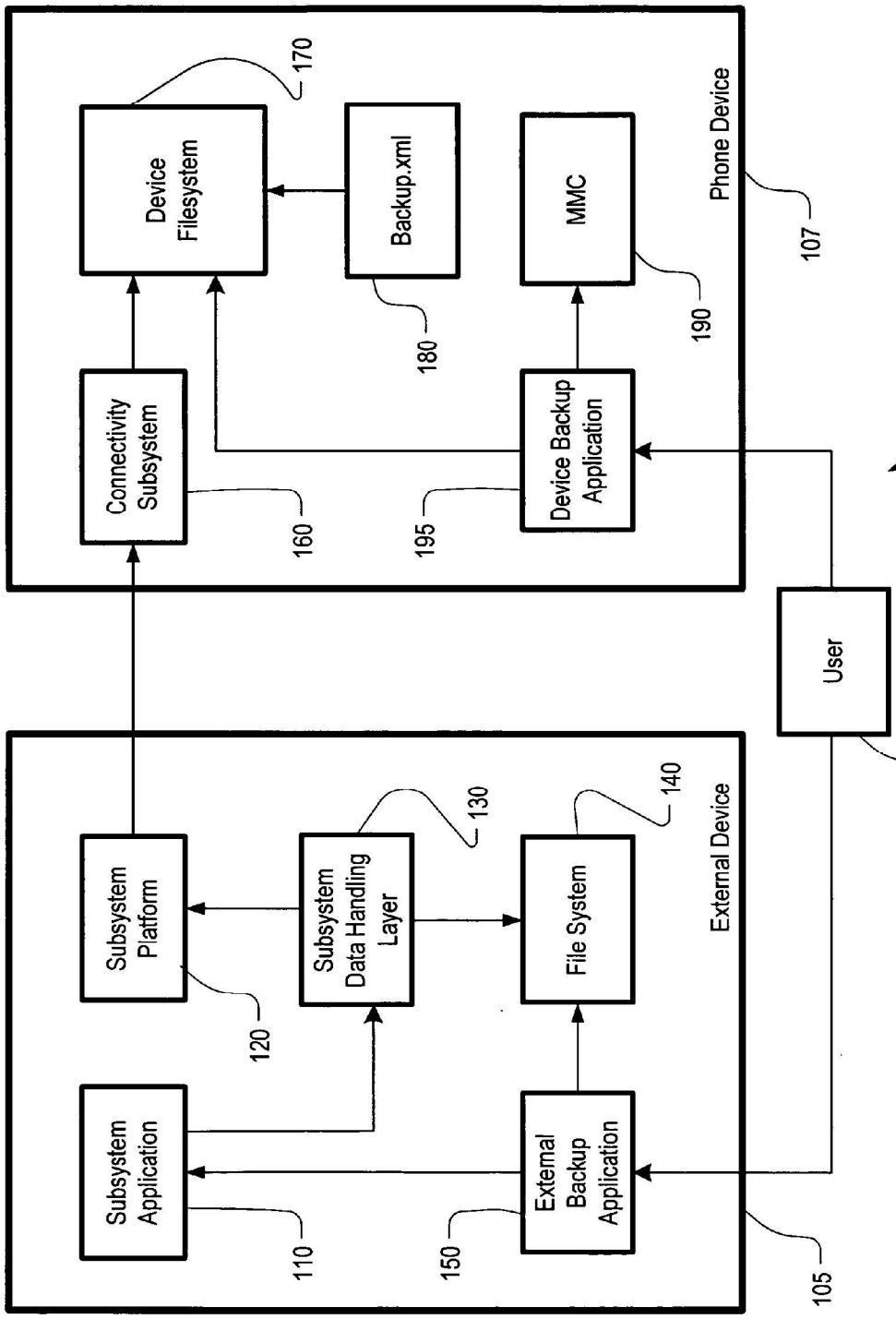
Phone Device
107
Device Filesystem
170
Backup.xml
180
MMC
190
Connectivity Subsystem
160
Device Backup Application
195
100
User
109
External Device
105
Subsystem Platform
120
Subsystem Data Handling Layer
130
File System
140
Subsystem Application
110
External Backup Application
150

FIG 1

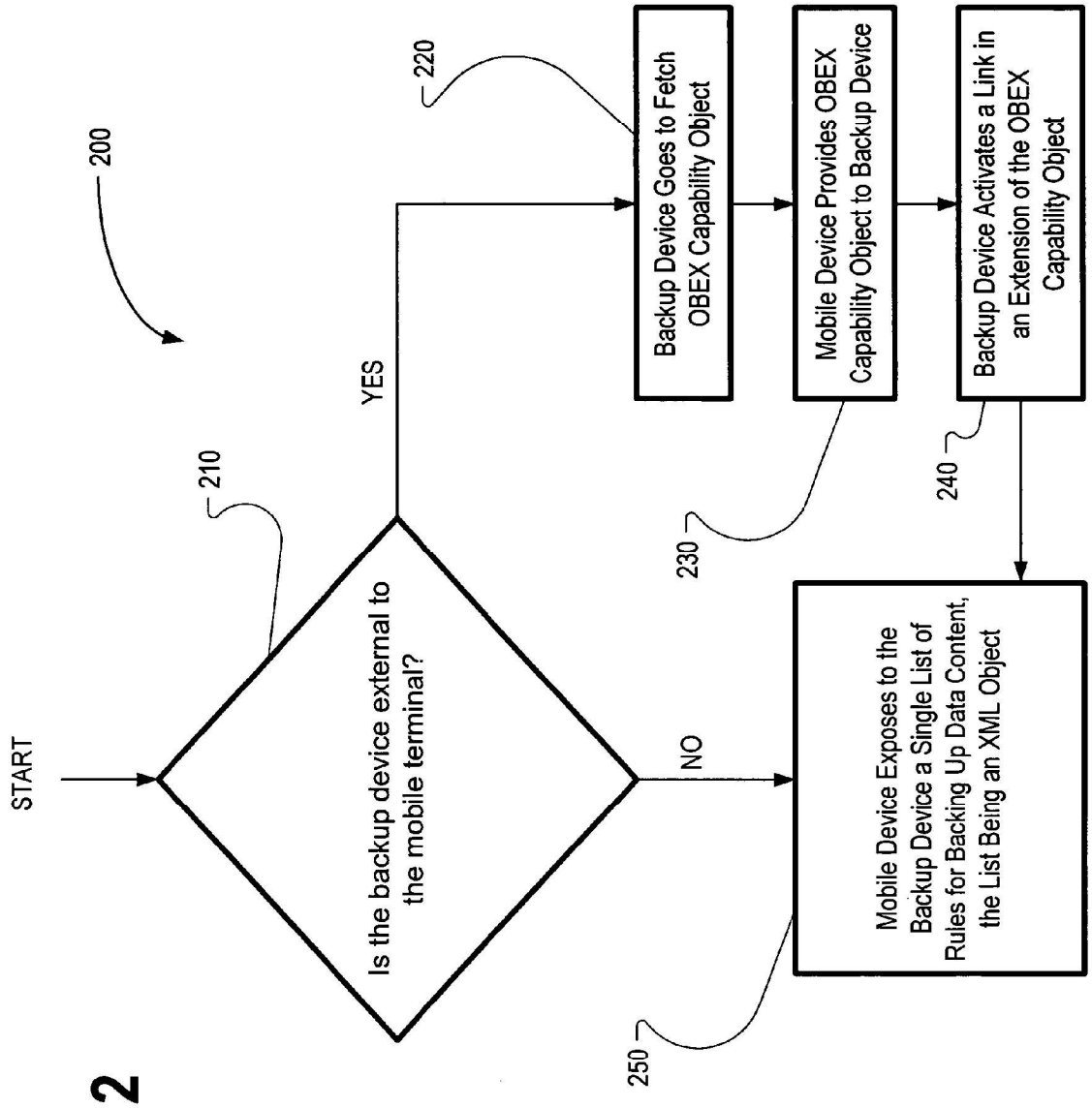
200
START
210
Is the backup device external to the mobile terminal?
YES
NO
220
Backup Device Goes to Fetch OBEX Capability Object
230
Mobile Device Provides OBEX Capability Object to Backup Device
240
Backup Device Activates a Link in an Extension of the OBEX Capability Object
250
Mobile Device Exposes to the Backup Device a Single List of Rules for Backing Up Data Content, the List Being an XML Object

FIG 2

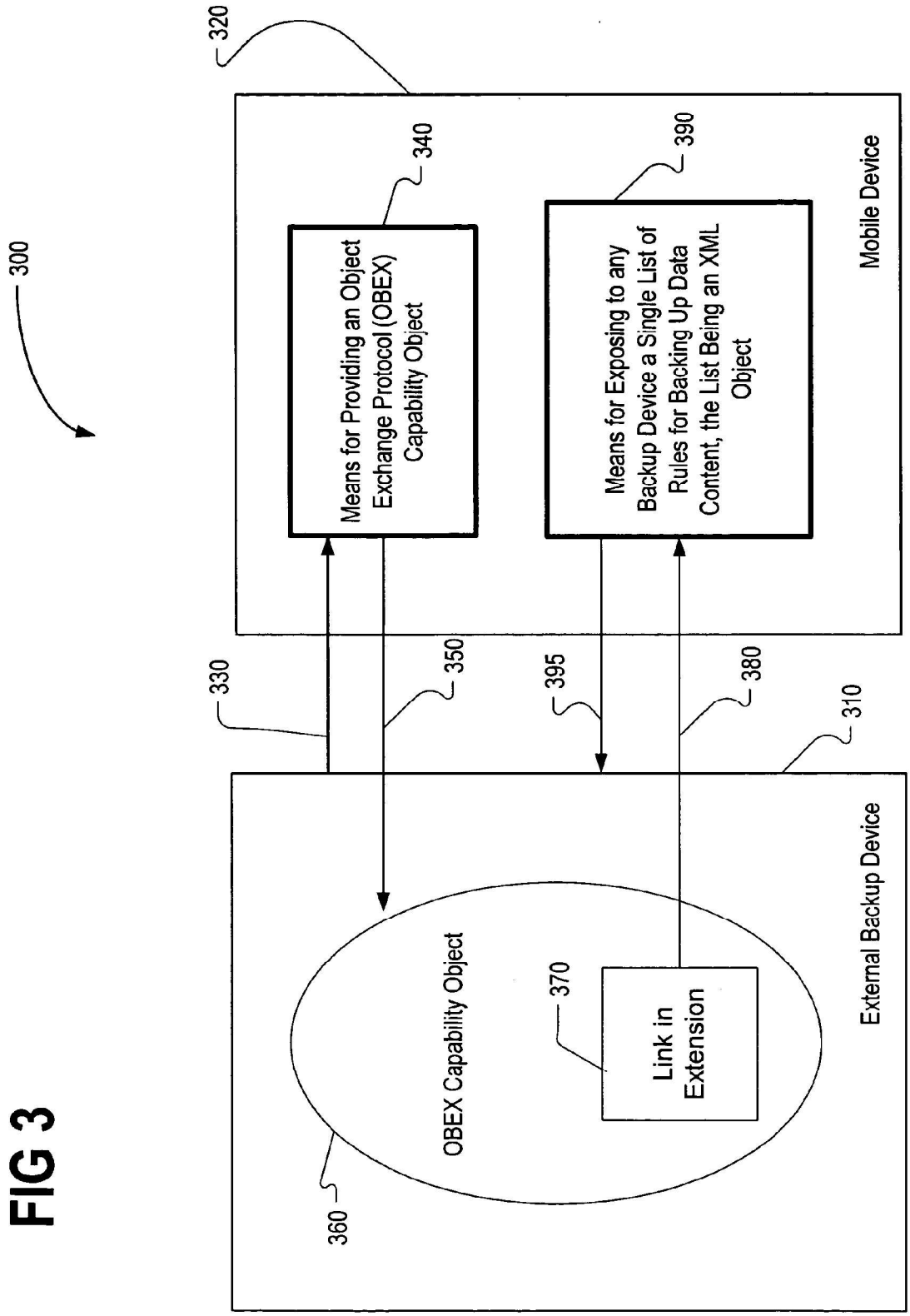
300
320
340
Means for Providing an Object Exchange Protocol (OBEX) Capability Object
390
Means for Exposing to any Backup Device a Single List of Rules for Backing Up Data Content, the List Being an XML Object
Mobile Device
330
350
395
380
310
OBEX Capability Object
370
Link in Extension
360
External Backup Device

FIG 3

CENTRALLY CONTROLLED BACKUP FUNCTIONALITY

FIELD OF THE INVENTION

[0001] The invention relates to backing up data, and more particularly to backing up data from a mobile communication device.

BACKGROUND OF THE INVENTION

[0002] The importance of users' data in mobile telephone devices is becoming a great concern of the telecommunications industry, because wireless phones are increasingly being used not just for communication but also for managing personal data. Therefore, backing up this data is an important issue, in order to protect against data loss. Some of this data can be backed up in synchronization with a local personal-computer (PC), or remotely backed up with a synchronisation server located in a network. In case the device is lost or broken, or in case of a hardware (HW) crash, one-way synchronization from the server (or PC) to the phone can be established in order to restore the data. However, data such as documents, or photos taken by a phone's built-in camera, may not be part of a typical synchronization procedure, and they may require traditional backup to be done manually, instead of in a regular and synchronized way. Different types of data need to be backed up at different intervals, and also may require different storage capacities, and therefore a need exists for an efficient system of backing up different types of data to different locations.

[0003] Recently, PC "suites" have been developed, in order to provide a package of applications that allow a user to synchronize, edit, and back up many of a phone's files on a compatible PC through a wireless or cable connection. See, for example, Nokia PC Suite: Description, at http://www.nokia.com/nokia/0,,54691,00.html. Since PC suite development has moved application development from a "separate release for each phone" towards a "unified" operation mode, it is now increasingly important to minimize phone-dependent differences. This need for unified functionality includes backup and restore functionality, because there are many variations of locations, amounts, and types of data to be backed up. There also are a number of variations of phone devices having different sets of applications and features (e.g. camera included or not included, differing multimedia capabilities, et cetera), and therefore data content needs to be copied to and from different locations and by following different rules.

[0004] Additionally, it is also important to consider a device's ability to be backed up by a removable medium such as a multi media card (MMC). The same backup rules are needed in this MMC case in order to ensure a good user experience. It is not acceptable or efficient for backup instructions to have a different meaning if the device's removable backup/restore application is used instead of a corresponding application on the PC side performing the same backup function.

[0005] Traditional device side backups, and also backups taken from the PC side, have not had any coordination with each other, and no coordinated rules about which content to respectively manage, and how to manage content jointly. Instead, each side has had its own "exclude" lists used for blocking out unnecessary content from backup, and this has unfortunately led to the present difficult situation where backups are not necessarily consistent with each other.

[0006] It is known in the art to use an Object Exchange Protocol in order to provide a server with synchronization and backup services. See *Infrared Data Association (IrDA) Object Exchange Protocol,* OBEX, Version 1.3 dated Jan. 3, 2003, Section 8.3. However, no way has heretofore been found to use OBEX so as to allow consistent backups to a plurality of backup repositories which respectively back up different categories of data.

SUMMARY OF THE INVENTION

[0007] The present invention enables a device to expose rules regarding how the device should be backed up and restored, and these exposed rules are for use by all parties including the device itself. These rules are valid not only for the device's own (e.g. MMC) backup application, but additionally for the PC side backup used via local communication media such as a universal serial bus (USB), Bluetooth (BT), wireless local area network (WLAN), or infrared link (in accordance with the Infrared Data Association IrDA). These rules can additionally be valid for a backup application employing a synchronisation server located in a network.

[0008] The device of the present invention contains a structured list in extensible markup language (XML), including strict rules about how a particular main category of data content should be handled. An external party such as a PC can obtain access to the structured list by fetching a first object that describes capabilities of the device.

[0009] This first object is part of the Object Exchange Protocol (OBEX) standard developed by the IrDA, and this first object is called an "OBEX capability object." Various extensions to the OBEX capability object can be defined, including an extension that links to a location of a backup description XML object (backup.xml). This backup description XML object then provides the structured list explaining how data should be backed up from the device. It should be noted that the structure of the backup description XML object is given by a Document Type Definition (DTD). The purpose of a Document Type Definition is to define the allowed building blocks of an XML document; it defines the document structure with a list of allowed elements. Inside of this DTD there are possibilities for making additions for additional content or types of content. The structured list is thus accessible via normal file transfer.

[0010] The method and mobile device of the present invention thus make it feasible to centrally control backup functionality, so that backup devices will efficiently be informed how data content should be backed up from (and restored to) the mobile device. The device is equipped to provide an object exchange protocol (OBEX) capability object from the mobile device to the backup device. The device then exposes to the backup device a backup description extensible markup language (XML) object in response to a link from an extension of the OBEX capability object.

[0011] The present invention is for centrally controlling backup functionality, so that parties such as backup devices will efficiently learn how data content should be backed up from the mobile device, or restored to the mobile device.

The mobile device exposes (i.e. shows) to a party various rules for backing up or restoring data content, and those rules are not only for the party, but also are for other parties including the mobile device itself, including all backup devices that interact with the mobile device. The rules are contained in a list formatted in extensible markup language (XML). If the party is an external party, the mobile device provides an object exchange protocol (OBEX) capability object in response to the party fetching that object. The OBEX capability object describes capabilities of the mobile device, and is also for use by the external party in order to access the list of rules via the mobile device exposing those rules to the external party, as discussed previously.

BRIEF DESCRIPTION OF THE DRAWINGS

[0012] **FIG. 1** shows subsystems and components needed for centralized backup handling.

[0013] **FIG. 2** shows a method according to an embodiment of the present invention.

[0014] **FIG. 3** shows a block diagram of an embodiment of the present invention.

DETAILED DESCRIPTION OF THE INVENTION

[0015] A backup description XML object (backup.xml) containing a list of rules is available by linking from an OBEX capability object that is fetched from a mobile device by a PC, MMC, or network server. The syntax for the capability object is based on XML, and XML has been chosen because of its flexibility and ease with which elements can be categorized and their attributes collected. The capability object is flexible enough that individual manufacturers can selectively include objects, services and attributes that are of interest to them. It also permits the addition of user-defined elements for specific application or manufacturer needs.

[0016] The backup description XML object contains categories to be backed up, such as user documents, calendar, contacts, bookmarks, and the like. Categories can be added to the backup description by defining a new version of DTD that describes backup.xml. These categories contain rules to be followed in the respective backup case. These rules are, for example, tags such as "include" or "exclude" or "includeatomic."

[0017] Each of these tags indicates folders and/or files belonging to the respective rule. Tags are of "file" type or "folder" type, meaning that the tag takes into account a single file or an entire folder structure, so that a single file or an entire folder is "included" in or "excluded" from the backup. The tag "includeatomic" has a specific purpose: it is used in cases where a folder contains linked files requiring that some of the folder must be handled as whole. In case of restore (as opposed to backup), this "includeatomic" tag means that the whole folder must be emptied before content can be replaced by the old version of the files (e.g. some of the emptied files will not be replaced).

[0018] Following is an example of information provided by the backup description XML object that is used for controlling backups.

```
<?xml version="1.0" standalone="yes"?>
<!DOCTYPE BACKUP>
<!ELEMENT BACKUP (CALENDAR?, CONTACTS?, MESSAGES?,
BOOKMARKS?, USER_DATA?,SETTINGS?, FULL?)>
<!ATTLIST BACKUP Version CDATA "1.0">
<!ELEMENT CALENDAR (INCLUDE | INCLUDEATOMIC |
EXCLUDE)+>
<!ELEMENT CONTACTS (INCLUDE | INCLUDEATOMIC |
EXCLUDE)+>
<!ELEMENT MESSAGES (INCLUDE | INCLUDEATOMIC |
EXCLUDE)+>
<!ELEMENT BOOKMARKS (INCLUDE | INCLUDEATOMIC |
EXCLUDE)+>
<!ELEMENT USER_DATA (INCLUDE | INCLUDEATOMIC |
EXCLUDE)+>
<!ELEMENT SETTINGS (INCLUDE | INCLUDEATOMIC |
EXCLUDE)+>
<!ELEMENT FULL (INCLUDE | INCLUDEATOMIC | EXCLUDE)+>
<!ELEMENT INCLUDE (FOLDER | FILE)+>
<!ELEMENT INCLUDEATOMIC (FOLDER | FILE)+>
<!ELEMENT EXCLUDE (FOLDER | FILE)+>
<!ELEMENT FOLDER (#PCDATA)>
<!ELEMENT FILE (#PCDATA)>
]>
<BACKUP Version="1.0">
<CALENDAR>
    <INCLUDE>
        <FILE>C:\System\Data\Calendar</FILE>
    </INCLUDE>
</CALENDAR>
<CONTACTS>
    <INCLUDE>
        <FILE>C:\System\Data\Contacts.cdb</FILE>
    </INCLUDE>
</CONTACTS>
<MESSAGES>
    <INCLUDEATOMIC>
        <FOLDER>C:\System\Mail\</FOLDER>
    </INCLUDEATOMIC>
</MESSAGES>
<BOOKMARKS>
    <INCLUDE>
        <FILE>C:\System\Data\Bookmarks1.db</FILE>
    </INCLUDE>
</BOOKMARKS>
<USER_DATA>
    <INCLUDE>
        <FOLDER>C:\Nokia\</FOLDER>
        <FOLDER>E:\</FOLDER>
    </INCLUDE>
    <EXCLUDE>
        <FOLDER>E:\System\</FOLDER>
    </EXCLUDE>
</USER_DATA>
<SETTINGS>
    <INCLUDE>
        <FOLDER>C:\System\Data\Profiles\</FOLDER>
        <FILE>C:\System\Data\Cdbv3.dat</FILE>
    </INCLUDE>
</SETTINGS>
<FULL>
    <INCLUDE>
        <FOLDER>C:\</FOLDER>
        <FOLDER>E:\</FOLDER>
    </INCLUDE>
    <EXCLUDE>
        <FOLDER>D:\</FOLDER>
        <FOLDER>C:\System\temp\</FOLDER>
        <FOLDER>E:\System\temp\</FOLDER>
        <FOLDER>C:\System\midp\</FOLDER>
        <FOLDER>E:\System\midp\</FOLDER>
        <FOLDER>C:\System\sounds\digital\</FOLDER>
        <FOLDER>E:\System\sounds\digital\</FOLDER>
        <FOLDER>C:\System\sounds\simple\</FOLDER>
        <FOLDER>E:\System\sounds\simple\</FOLDER>
        <FOLDER>C:\System\apps\phone\oplogo\</FOLDER>
```

-continued

```
        <FOLDER>E:\System\apps\phone\oplogo\</FOLDER>
        <FILE>C:\System\shareddata\reserve.bin</FILE>
        <FOLDER>C:\System\data\voucherdb</FOLDER>
        <FOLDER>E:\System\data\voucherdb</FOLDER>
        <FOLDER>C:\System\data\backupvdb</FOLDER>
        <FOLDER>E:\System\data\backupvdb</FOLDER>
        <FOLDER>E:\Images_temp</FOLDER>
    </EXCLUDE>
</FULL>
</BACKUP>
```

[0019] This approach to backing up mobile device data has the big advantage of having consistent functionality. This XML object can either be preprogrammed, or it can modified by a user. In either case, the user experience will be enhanced by ensuring reliable backups of user data, with the user data being backed up to a plurality of external backup areas in a coordinated fashion.

[0020] Implementation of this embodiment of the invention can be better appreciated by referring to **FIG. 1**, which shows subsystems and components of a centralized backup **100**. A user **109** has access to an external device **105** such as a personal computer (PC), and also has access to a phone device **107**.

[0021] The external device **105** includes a subsystem application **110** which contains applications running in the external device **105**. A backup application receives static information regarding a connected phone **107** that is unavailable in the backup.xml list of rules **180** or in the OBEX capability object. The subsystem platform **120** implements connectivity and protocol-specific parts. A subsystem data handling layer **130** is an abstraction layer of the application data; it communicates to the phone **107** via the subsystem platform **120** using protocols that the platform **120** implements. A file system **140** provides mass memory that is used for file storage. The external backup application **150** contains logic for decoding backup rules that are exposed by the phone device **107**. This external backup application **150** has a human interface enabling the user **109** to control backup/restore functionality, and the external backup application **150** uses the file storage provided by the file system **140**.

[0022] Turning now to the phone device **107**, this entity includes a connectivity subsystem **160** that is substantially similar to the subsystem platform **120** on the external side. Likewise, a device file system **170** in the phone device is substantially similar to the file system **140** on the external (e.g. PC) side. The backup.xml **180** is an object containing rules in XML form. The MMC **190** is a multi media card that provides removable mass memory, and extends the device file system **140**. Finally, the device backup application **195** corresponds to the external backup application **150** on the external side, and it stores backup on the MMC **190**.

[0023] **FIG. 2** is a flow chart showing a method **200** according to the present invention. First, it is determined **210** if the backup device is external to the mobile terminal (i.e. outside the mobile device). If not, then the mobile device directly exposes **250** the list of backup rules to the backup device within the mobile terminal. This single list is also to be exposed to external backup devices. Of course, although this is a single list, the different backup devices can utilize different parts of the list, given the different requirements and capabilities of each backup device. If the question **210** is answered positively, then the backup device will go fetch **220** the OBEX capability object from the mobile device. Then, the mobile device will provide **230** the OBEX capability object. The backup device will then, in this embodiment, activate **240** a link in an extension of the OBEX capability object, and this will cause the mobile device to expose **250** the list of backup and/or restore rules to the backup device.

[0024] **FIG. 3** shows system **300** corresponding to part of the method just described. The external backup device **310** will send a fetch signal **330** to the mobile device **320**, and in particular this signal will be received by a means **340** for providing an OBEX capability object. This means **340** will respond by providing on a line **350** the OBEX capability object **360**. The external backup device **310** will then activate a link located in an extension **370** of the OBEX capability object **360**, and the extension **370** will consequently send an expose request signal **380** to the mobile device **320**, and in particular to a means **390** for exposing to any backup device a list of backup rules. In response, the means **390** will then send an expose signal **395** to the external backup device in order to provide the uniform centralized backup rules to the backup device **310**.

[0025] It is to be understood that the present figures, and the accompanying narrative discussions of best mode embodiments, are illustrative of the present invention, and are not purported to be completely rigorous treatments of the invention under consideration. A person skilled in the art will understand that the steps and signals of the present application represent general cause-and-effect relationships that do not exclude intermediate interactions of various types, and will further understand that the various steps and structures described in this application can be implemented by a variety of different combinations of hardware and software, in various configurations and sequences, consistent with the spirit and scope of the present invention, and need not be further detailed herein.

What is claimed is:

1. A method for a mobile device to describe to a party how data content should be backed up from the mobile device or restored to the mobile device, comprising:

exposing to the party rules for backing up or restoring the data content, wherein the rules are for the party and for other parties including the mobile device itself, and wherein the rules are contained in a list formatted in extensible markup language (XML); and

providing an object exchange protocol (OBEX) capability object from the mobile device to the party if the party is an external party that has fetched the OBEX capability object, wherein the OBEX capability object describes capabilities of the mobile device, and wherein the OBEX capability object is for use by the external party in order to access the list via the exposing step.

2. The method of claim 1, wherein the exposing step is in response to a link from an extension of the OBEX capability object.

3. The method of claim 1, wherein the party is a backup device, and the other party is another backup device.

4. The method of claim 1, wherein the list exposed to the party is substantially identical for a removable backup device that is removable from the mobile device.

5. The method of claim 1, wherein the OBEX capability object provided by the mobile device is substantially identical for at least one other party.

6. The method of claim 1, wherein the party is a medium removable from the mobile device, or is a personal computer, or is a synchronization server in a network.

7. The method of claim 5, wherein the OBEX capability object provided by the mobile device is substantially identical for every other party.

8. The method of claim 6, wherein the medium is a multi media card (MMC).

9. The method of claim 6, wherein if the party is the personal computer, then the backup occurs via a local communication medium.

10. The method of claim 1, wherein the list has a document type definition (DTD) structure that includes a plurality of categories of the data content, and that also accommodates additions for additional categories of the data content.

11. The method of claim 10, wherein the list provides backup rules to be followed in each of the categories respectively.

12. The method of claim 9, wherein the local communication medium is a universal serial bus, bluetooth, wireless local area network, or infrared link.

13. A computer readable medium encoded with a software data structure for performing the method of claim 1.

14. A mobile device for describing to a party how data content should be backed up from the mobile device or restored to the mobile device, comprising:

means for exposing to the party rules for backing up or restoring the data content, wherein the rules are for the party and for other parties including the mobile device itself, and wherein the rules are contained in a list formatted in extensible markup language (XML); and

means for providing an object exchange protocol (OBEX) capability object from the mobile device to the party if the party is an external party that has fetched the OBEX capability object, wherein the OBEX capability object describes capabilities of the mobile device, and wherein the OBEX capability object is for use by the external party in order to access the list from the exposing means.

15. The mobile device of claim 14, wherein the exposing means is responsive to a link from an extension of the OBEX capability object.

16. The mobile device of claim 14, wherein the party is a backup device, and the other party is another backup device.

17. The mobile device of claim 14, wherein the list exposed to the party is substantially identical for a removable backup device that is removable from the mobile device.

18. The mobile device of claim 14, wherein the OBEX capability object provided by the mobile device is substantially identical for at least one other party.

19. The mobile device of claim 14, wherein the party is a medium removable from the mobile device, or is a personal computer, or is a synchronization server in a network.

20. The mobile device of claim 18, wherein the OBEX capability object provided by the mobile device is substantially identical for every other party.

21. The mobile device of claim 19, wherein the medium is a multi media card (MMC).

22. The mobile device of claim 19, wherein if the party is the personal computer, then the backup occurs via a local communication medium.

23. The mobile device of claim 14, wherein the list has a document type definition (DTD) structure that includes a plurality of categories of the data content, and that also accommodates additions for additional categories of the data content.

24. The mobile device of claim 23, wherein the list provides backup rules to be followed in each of the categories respectively.

25. The mobile device of claim 22, wherein the local communication medium is a universal serial bus, bluetooth, wireless local area network, or infrared link.

26. A system for describing how data content should be backed up from a mobile device or restored to the mobile device, comprising:

the mobile device; and

an external device, for providing a fetch signal, and also for providing an expose request signal responsive to receipt of an OBEX capability object;

wherein the mobile device includes

means for providing to the external device an object exchange protocol (OBEX) capability object, responsive to the fetch signal; and

means for exposing to the external device rules for backing up or restoring the data content, responsive to the expose request signal;

wherein the OBEX capability object describes capabilities of the mobile device.

* * * * *