US 20090034498A1

(19) United States

(12) Patent Application Publication

Banerjea et al.

(10) Pub. No.: US 2009/0034498 A1

(43) Pub. Date: Feb. 5, 2009

(54) **SIMULTANEOUSLY MAINTAINING BLUETOOTH AND 802.11 CONNECTIONS TO INCREASE DATA THROUGHPUT**

(76) Inventors: **Raja Banerjea**, Sunnyvale, CA (US); **Robert Fanfelle**, Redwood City, CA (US)

Correspondence Address:
MARSHALL, GERSTEIN & BORUN, LLP (MARVELL)
233 SOUTH WACKER DRIVE, 6300 SEARS TOWER
CHICAGO, IL 60606-6357 (US)

(21) Appl. No.: **12/182,758**

(22) Filed: **Jul. 30, 2008**

Related U.S. Application Data

(60) Provisional application No. 60/952,744, filed on Jul. 30, 2007.

Publication Classification

(51) **Int. Cl.**
H04Q 7/24 (2006.01)
H04B 7/00 (2006.01)

(52) **U.S. Cl.** **370/338**; 455/41.2

(57) **ABSTRACT**

A device for wirelessly communicating between one or more mobile communication devices over a wireless network. A primary mobile communication device is configured to establish one or more connections to one or more secondary mobile communication devices. The primary mobile communication device is further configured to establish a first connection and a second connection to at least one of the secondary mobile communication devices. The first connection is a Bluetooth (BT) connection and the second connection is a Wireless Fidelity (WiFi) connection. The primary mobile device is also configured to establish a third connection to another secondary mobile communication device wherein the third connection is a WiFi connection. Additionally, the primary mobile communication device is configured to simultaneously maintain the BT connection and the WiFi connections during the bi-directional transmission of data between the primary mobile communication device and the secondary mobile communication devices.

100

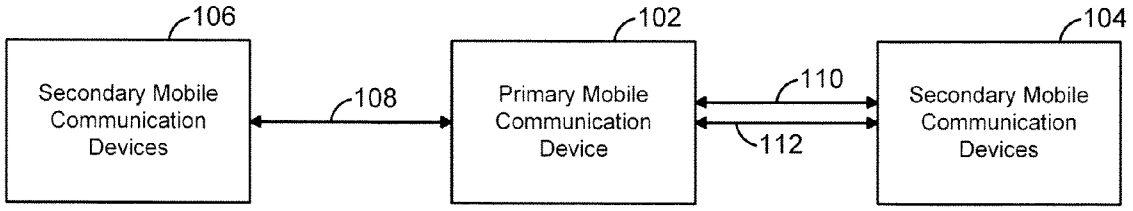

MICROSOFT CORP.
EXHIBIT 1010

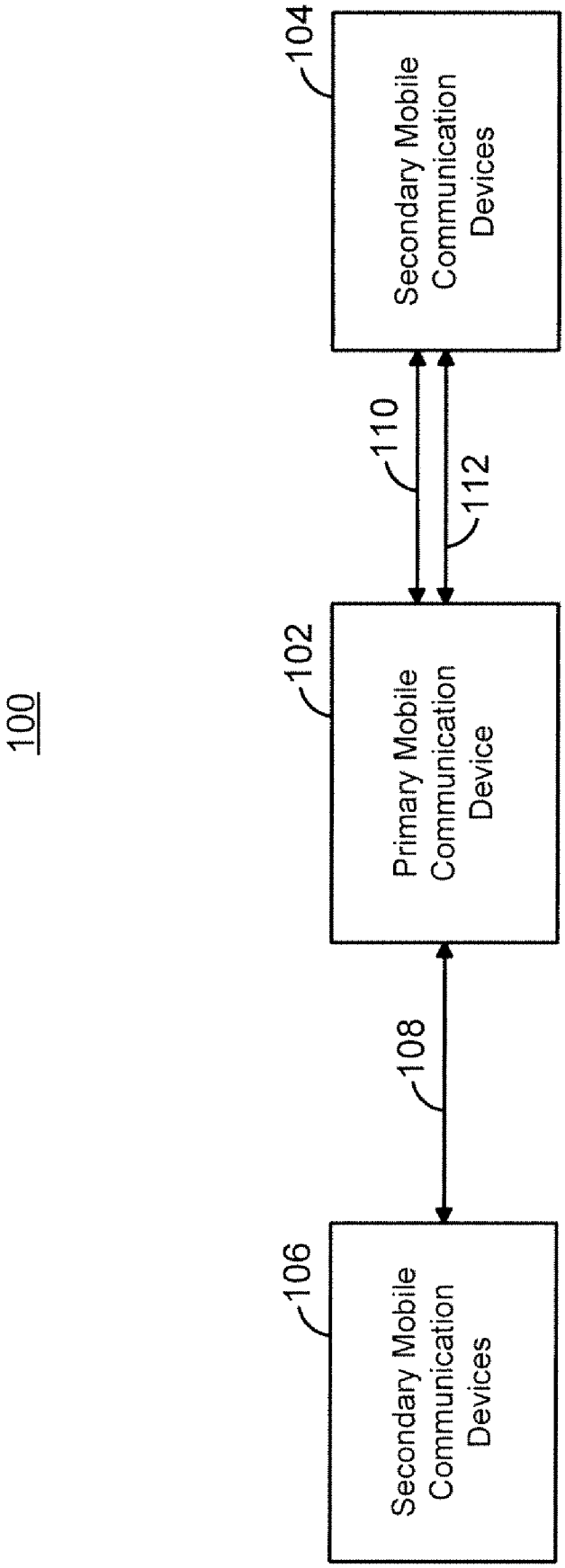
100
104
Secondary Mobile Communication Devices
110
112
102
Primary Mobile Communication Device
108
106
Secondary Mobile Communication Devices

FIG. 1

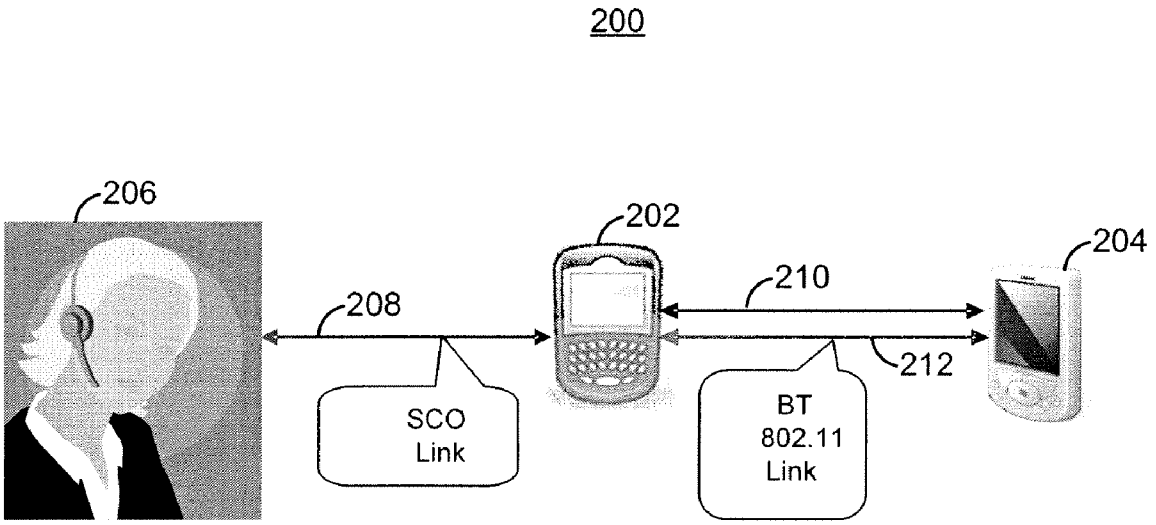

FIG. 2

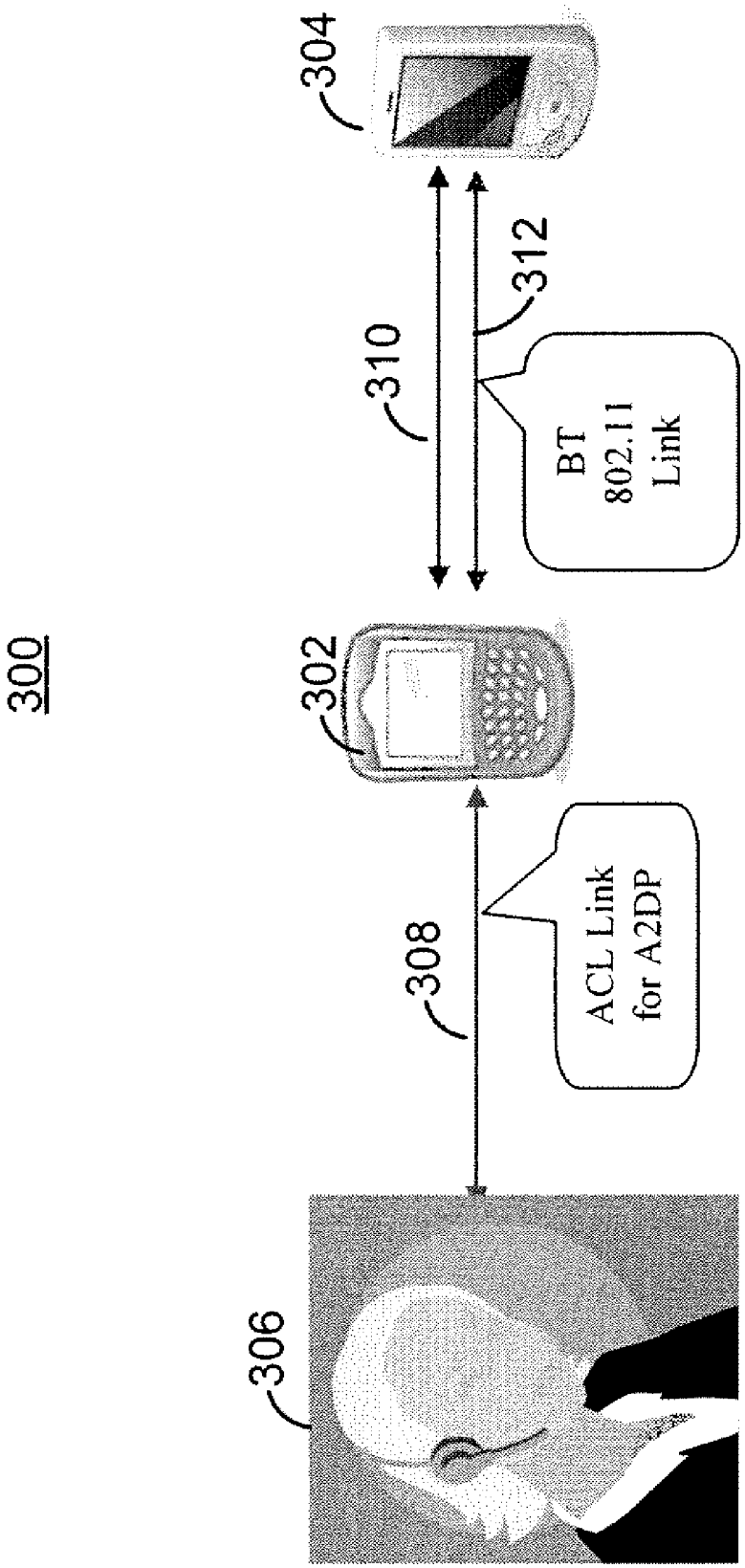

FIG. 3

400

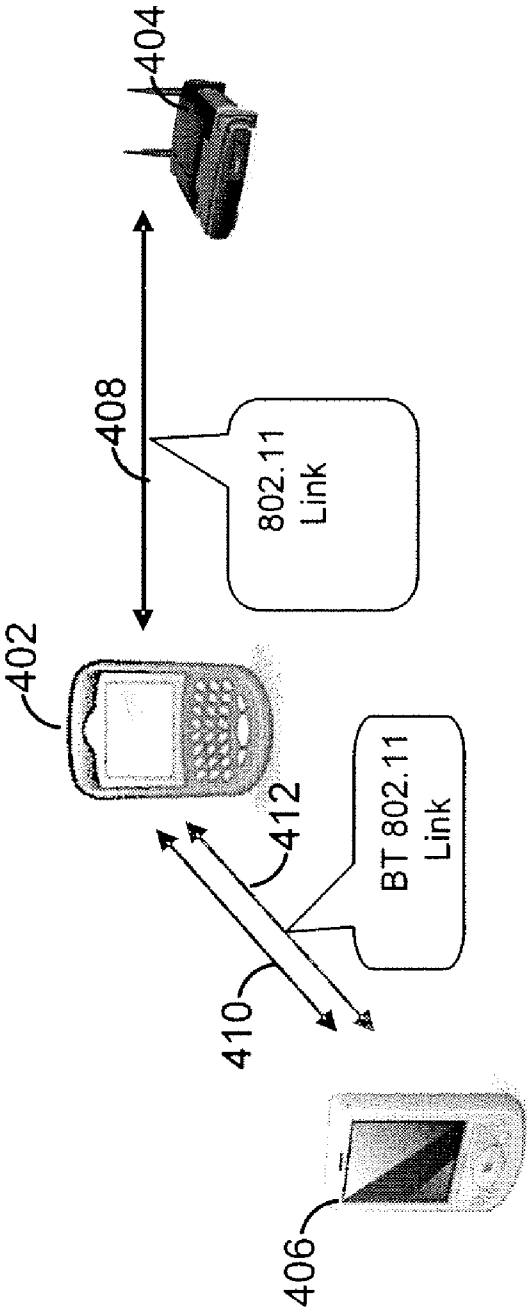

FIG. 4

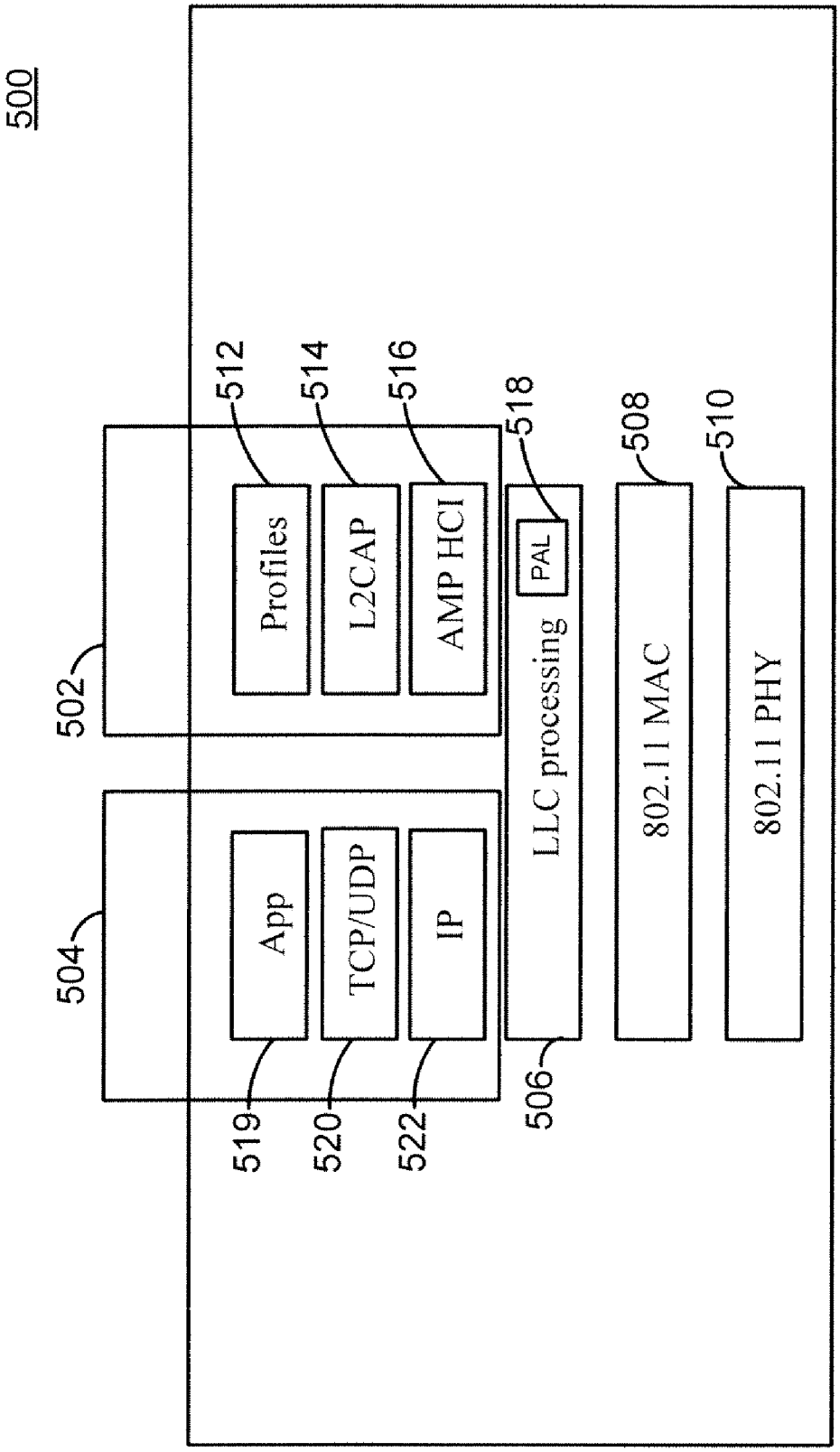
500
502
504
Profiles
L2CAP
AMP HCI
App
TCP/UDP
IP
PAL
LLC processing
802.11 MAC
802.11 PHY
512
514
516
518
519
520
522
506
508
510

FIG. 5

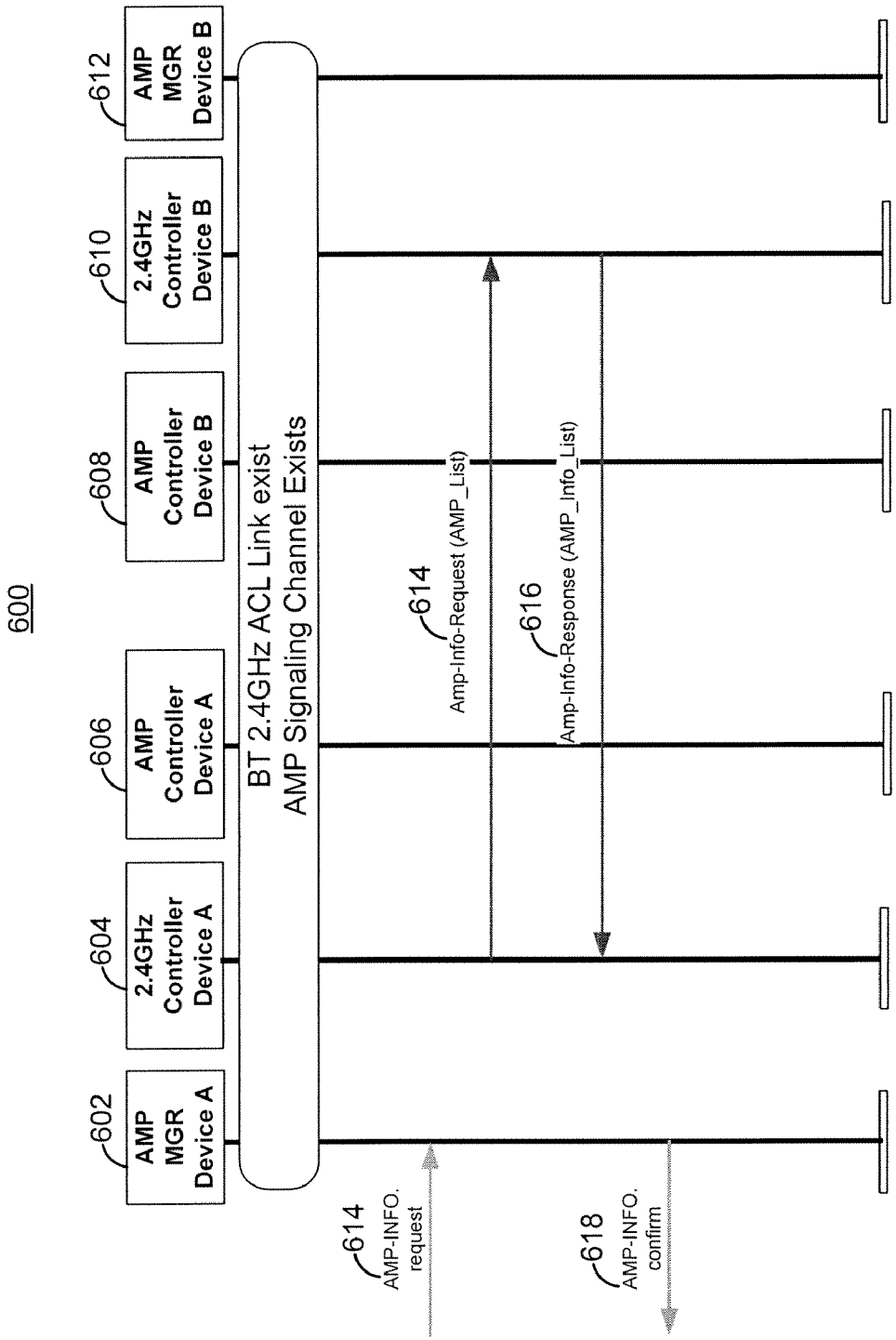
600
602
AMP MGR Device A
604
2.4GHz Controller Device A
606
AMP Controller Device A
608
AMP Controller Device B
610
2.4GHz Controller Device B
612
AMP MGR Device B
BT 2.4GHz ACL Link exist
AMP Signaling Channel Exists
614
Amp-Info-Request (AMP_List)
616
Amp-Info-Response (AMP_Info_List)
614
AMP-INFO. request
618
AMP-INFO. confirm

FIG. 6

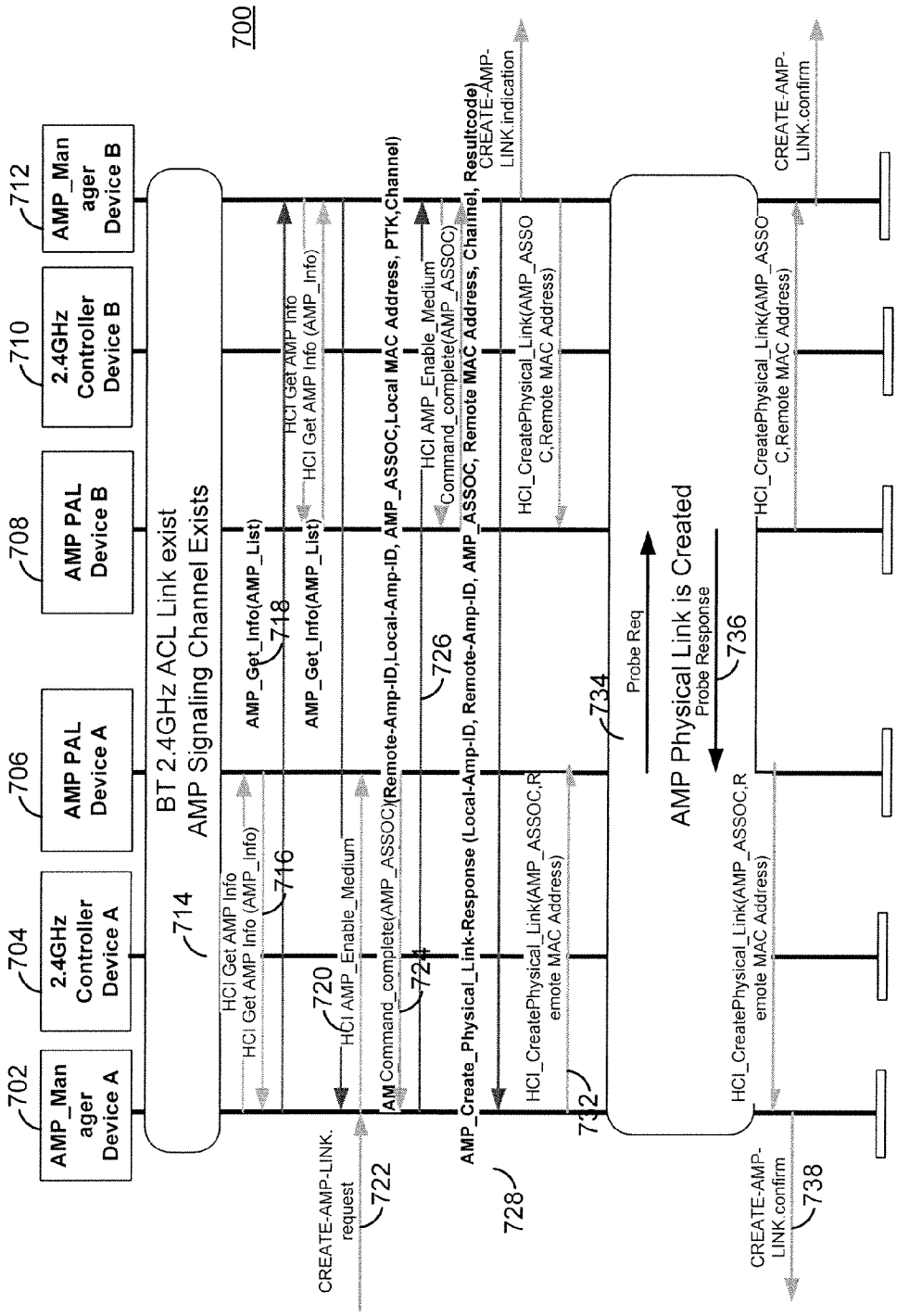
700
702
AMP_Manager Device A
704
2.4GHz Controller Device A
706
AMP PAL Device A
708
AMP PAL Device B
710
2.4GHz Controller Device B
712
AMP_Manager Device B
714
BT 2.4GHz ACL Link exist
AMP Signaling Channel Exists
CREATE-AMP-LINK.request
722
HCI Get AMP Info
HCI Get AMP Info (AMP_Info)
716
HCI AMP_Enable_Medium
720
AMP_Get_Info(AMP_List)
718
HCI Get AMP Info
HCI Get AMP Info (AMP_Info)
AMP_Get_Info(AMP_List)
AMP Command_complete(AMP_ASSOC)(Remote-Amp-ID,Local-Amp-ID, AMP_ASSOC,Local MAC Address, PTK,Channel)
724
726
HCI AMP_Enable_Medium
Command_complete(AMP_ASSOC)
AMP_Create_Physical_Link-Response (Local-Amp-ID, Remote-Amp-ID, AMP_ASSOC, Remote MAC Address, Channel, Resultcode)
728
HCI_CreatePhysical_Link(AMP_ASSOC,Remote MAC Address)
732
HCI_CreatePhysical_Link(AMP_ASSO C,Remote MAC Address)
CREATE-AMP-LINK.indication
734
Probe Req
AMP Physical Link is Created
Probe Response
736
HCI_CreatePhysical_Link(AMP_ASSOC,Remote MAC Address)
HCI_CreatePhysical_Link(AMP_ASSO C,Remote MAC Address)
CREATE-AMP-LINK.confirm
CREATE-AMP-LINK.confirm
738

FIG. 7

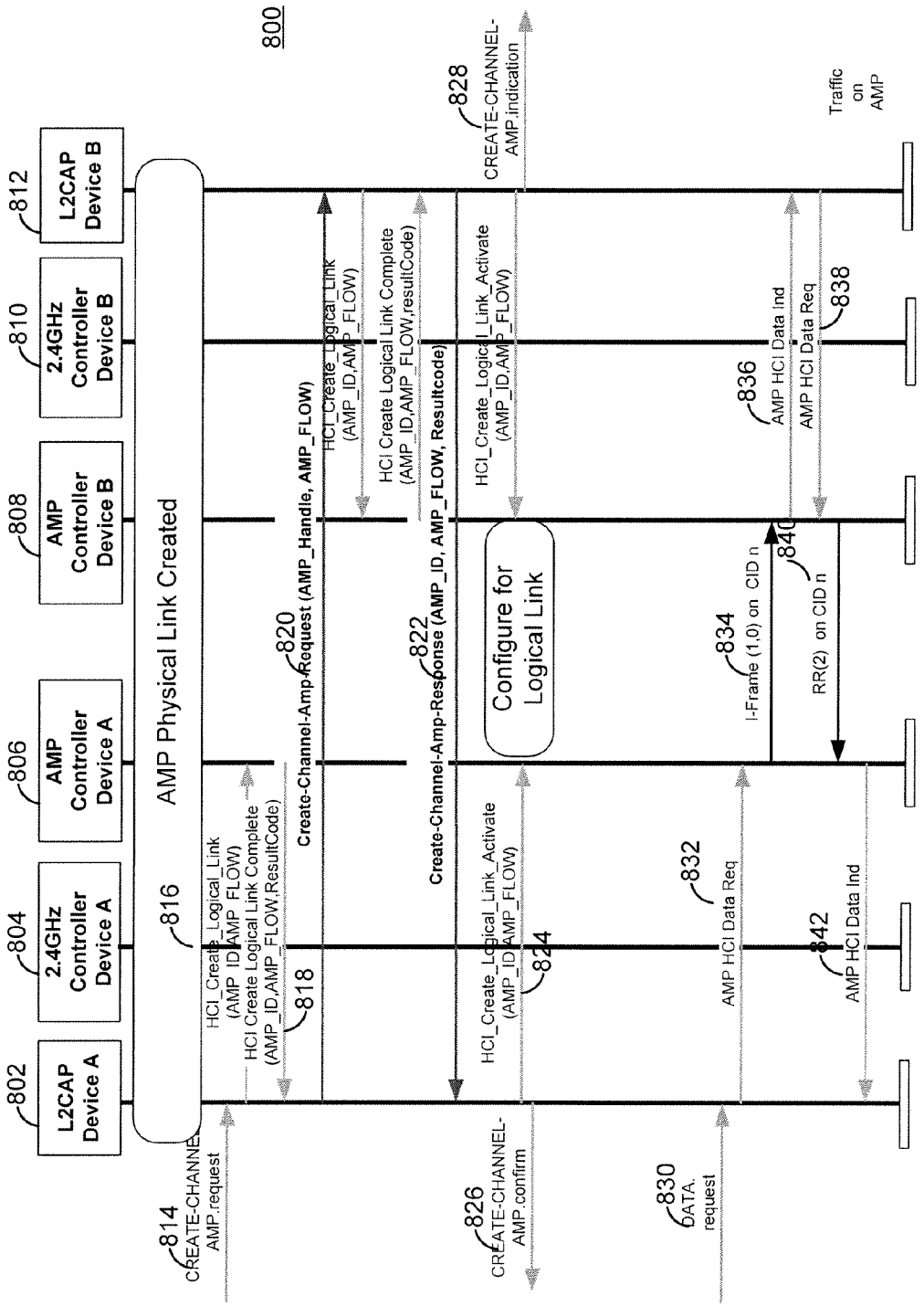
800
802
L2CAP Device A
804
2.4GHz Controller Device A
806
AMP Controller Device A
808
AMP Controller Device B
810
2.4GHz Controller Device B
812
L2CAP Device B
AMP Physical Link Created
816
814
CREATE-CHANNEL-AMP.request
818
HCI_Create_Logical_Link (AMP_ID,AMP_FLOW)
HCI Create Logical Link Complete (AMP_ID,AMP_FLOW,ResultCode)
820
Create-Channel-Amp-Request (AMP_Handle, AMP_FLOW)
HCI_Create_Logical_Link (AMP_ID,AMP_FLOW)
HCI Create Logical Link Complete (AMP_ID,AMP_FLOW,resultCode)
822
Create-Channel-Amp-Response (AMP_ID, AMP_FLOW, Resultcode)
824
HCI_Create_Logical_Link_Activate (AMP_ID,AMP_FLOW)
826
CREATE-CHANNEL-AMP.confirm
828
CREATE-CHANNEL-AMP.indication
HCI_Create_Logical_Link_Activate (AMP_ID,AMP_FLOW)
Configure for Logical Link
830
DATA.request
832
AMP HCI Data Req
834
I-Frame (1,0) on CID n
836
AMP HCI Data Ind
838
AMP HCI Data Req
840
RR(2) on CID n
842
AMP HCI Data Ind
Traffic on AMP

FIG. 8

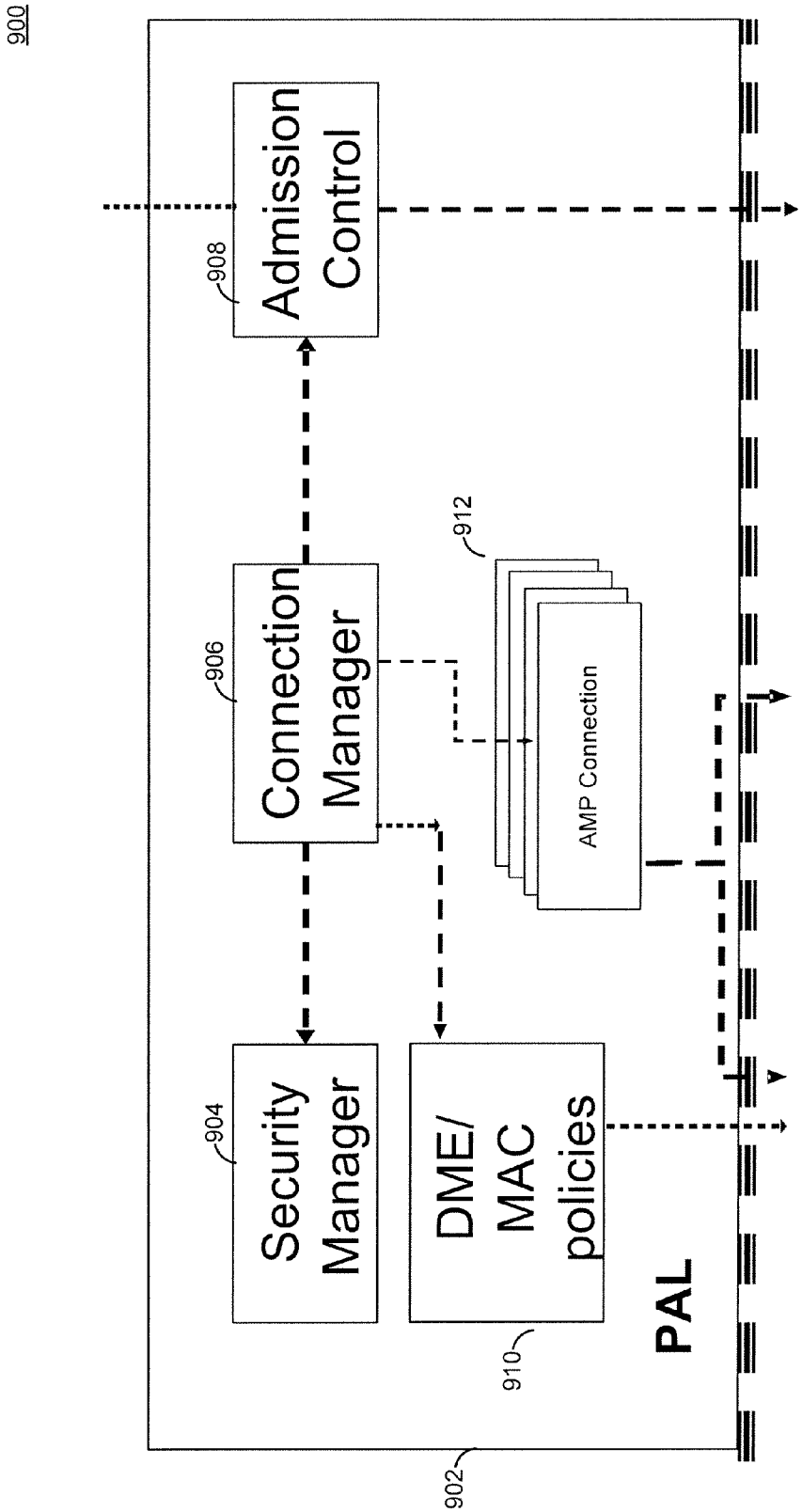
900
Admission Control
908
Connection Manager
906
Security Manager
904
DME/ MAC policies
910
912
AMP Connection
PAL
902

FIG. 9

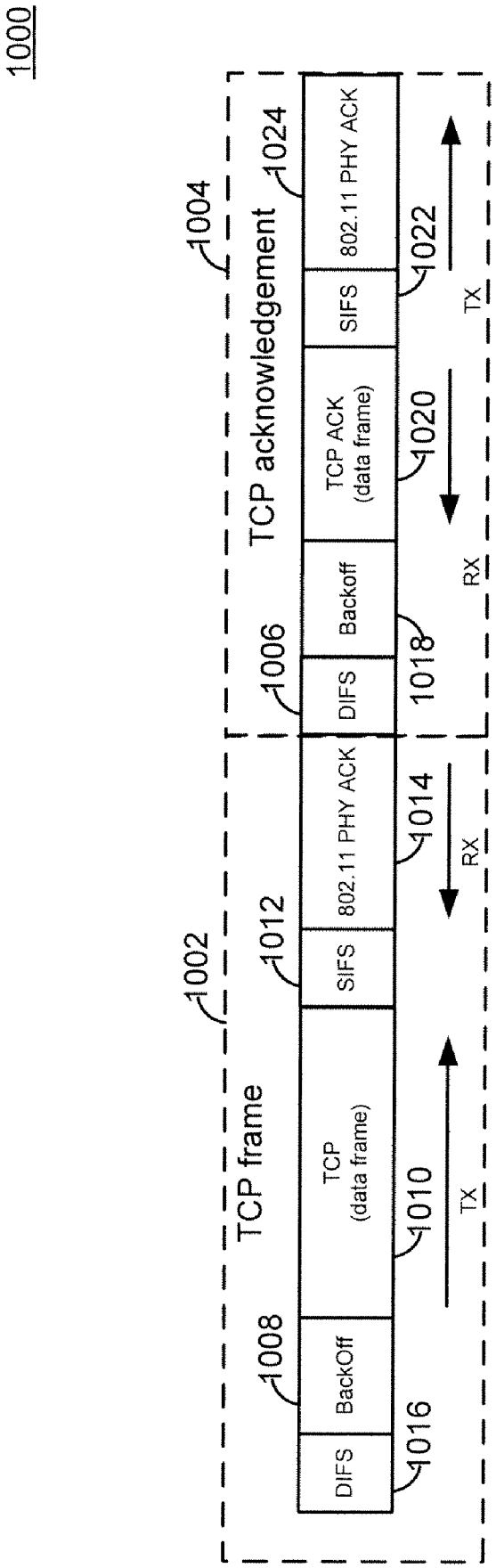
1000
1002
TCP frame
1004
TCP acknowledgement
DIFS
BackOff
TCP
(data frame)
SIFS
802.11 PHY ACK
DIFS
Backoff
TCP ACK
(data frame)
SIFS
802.11 PHY ACK
1008
1012
1006
1024
1016
1010
1014
1018
1020
1022
TX
RX
RX
TX

FIG. 10

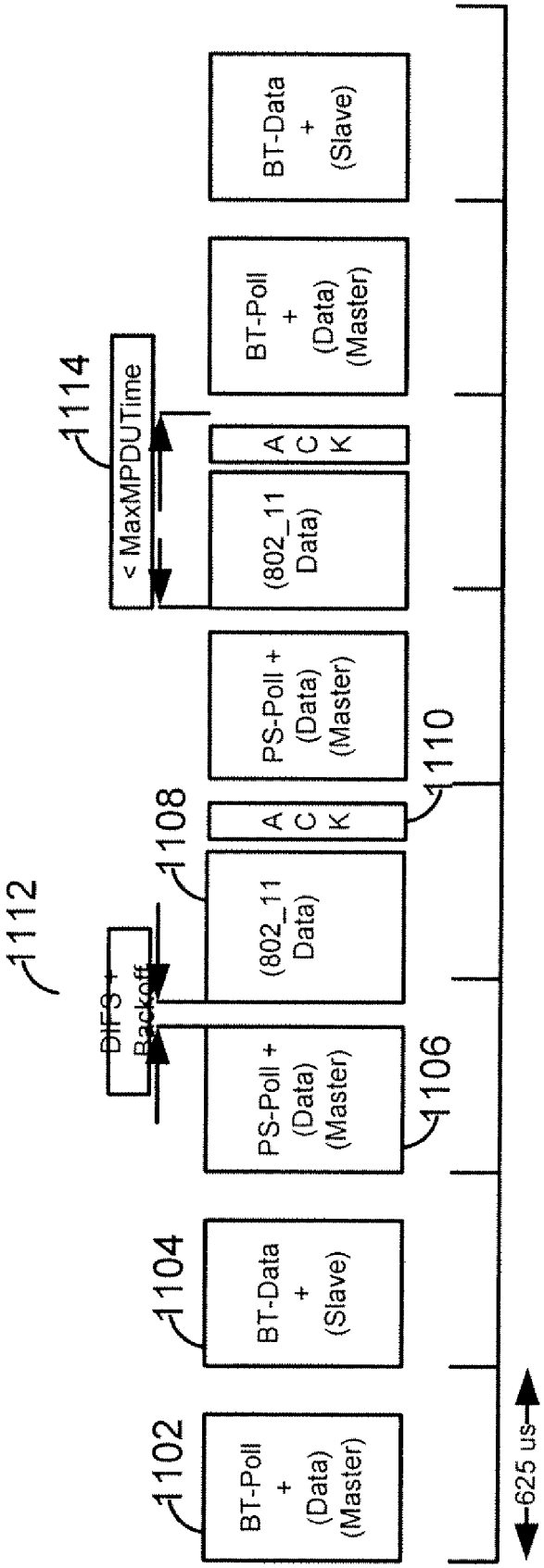
1100
1102
BT-Poll + (Data) (Master)
1104
BT-Data + (Slave)
1106
PS-Poll + (Data) (Master)
1108
(802_11 Data)
1110
A C K
PS-Poll + (Data) (Master)
1112
DIFS + Backoff
1114
< MaxMPDUTime
(802_11 Data)
A C K
BT-Poll + (Data) (Master)
BT-Data + (Slave)
625 us

FIG. 11

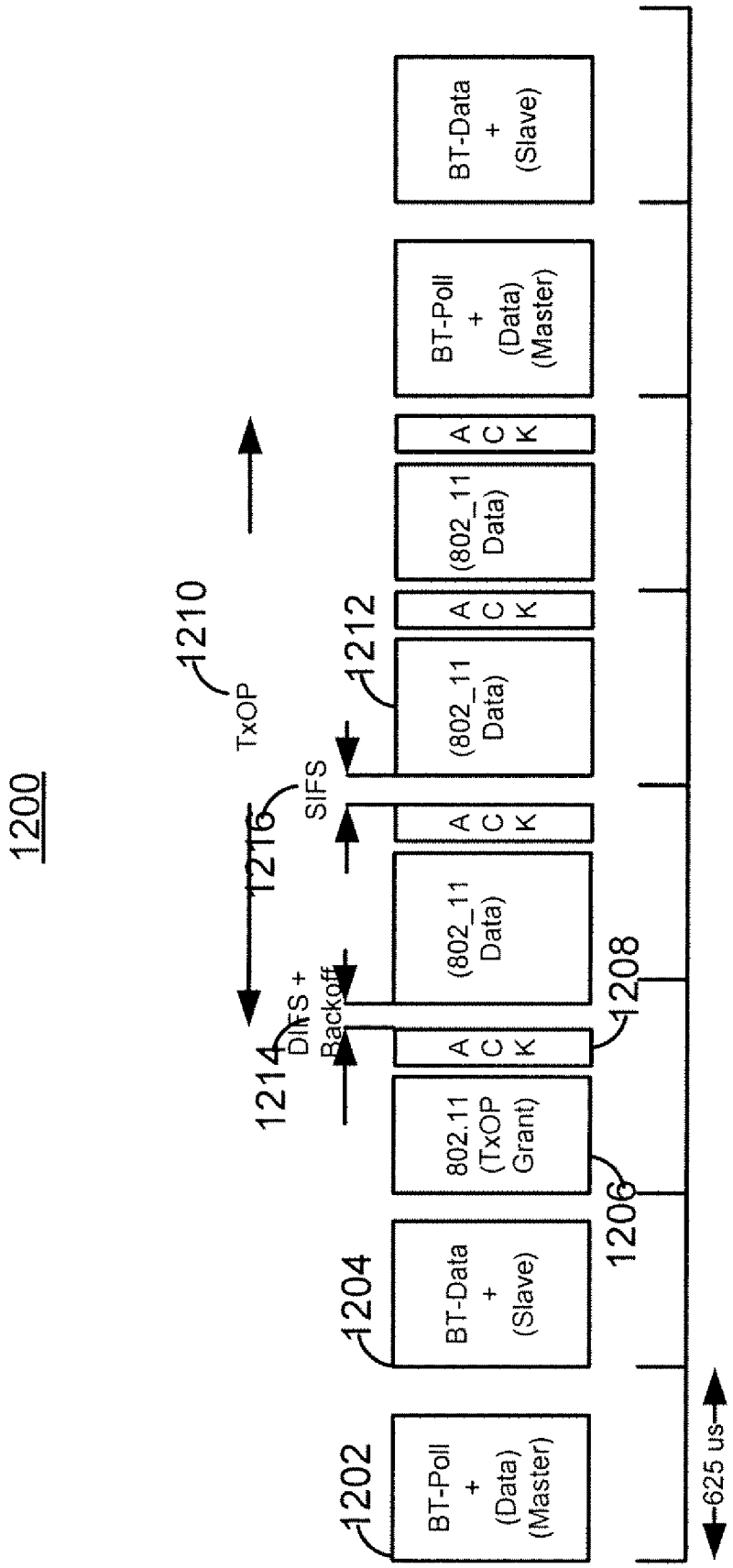
1200
1202
BT-Poll + (Data) (Master)
1204
BT-Data + (Slave)
802.11 (TxOP Grant)
1206
A C K
1208
DIFS + Backoff
1214
(802_11 Data)
1216
SIFS
A C K
1212
(802_11 Data)
A C K
(802_11 Data)
1210
TxOP
A C K
BT-Poll + (Data) (Master)
BT-Data + (Slave)
625 us

FIG. 12

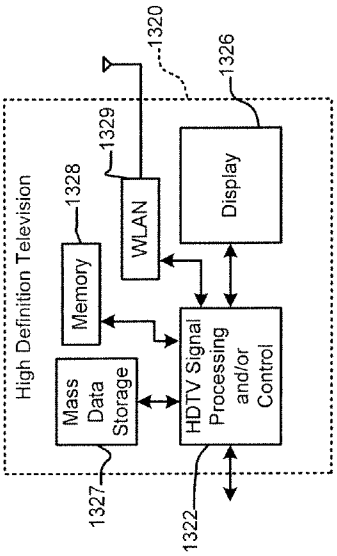

FIG. 13A

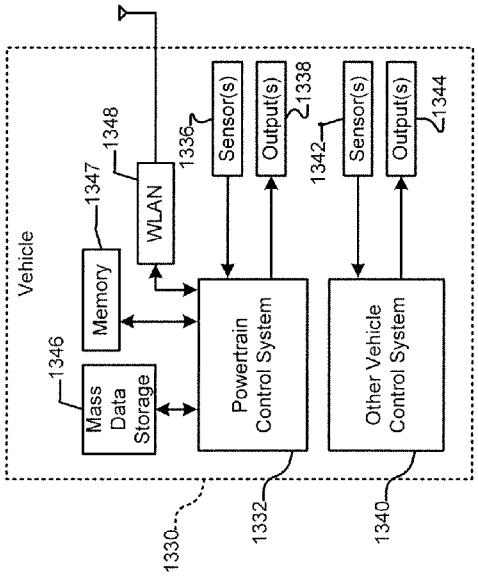

FIG. 13B

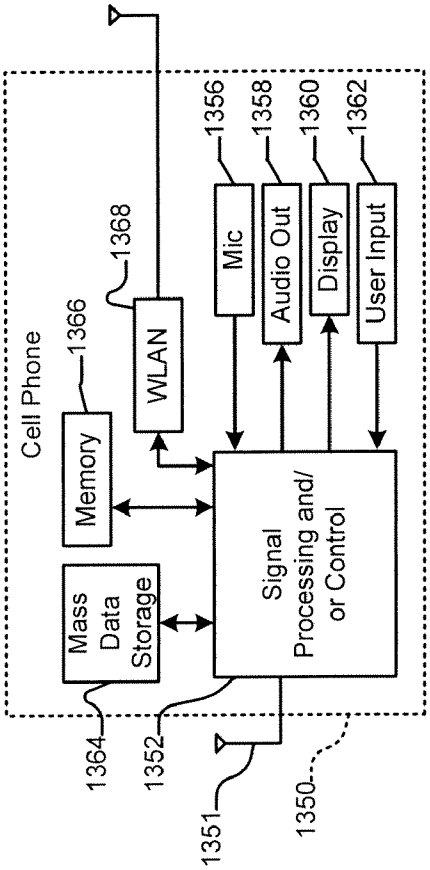

FIG. 13C

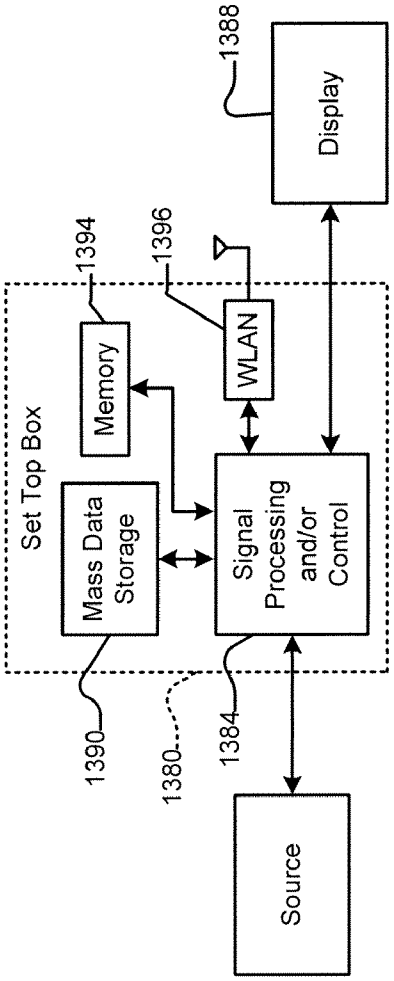

FIG. 13D

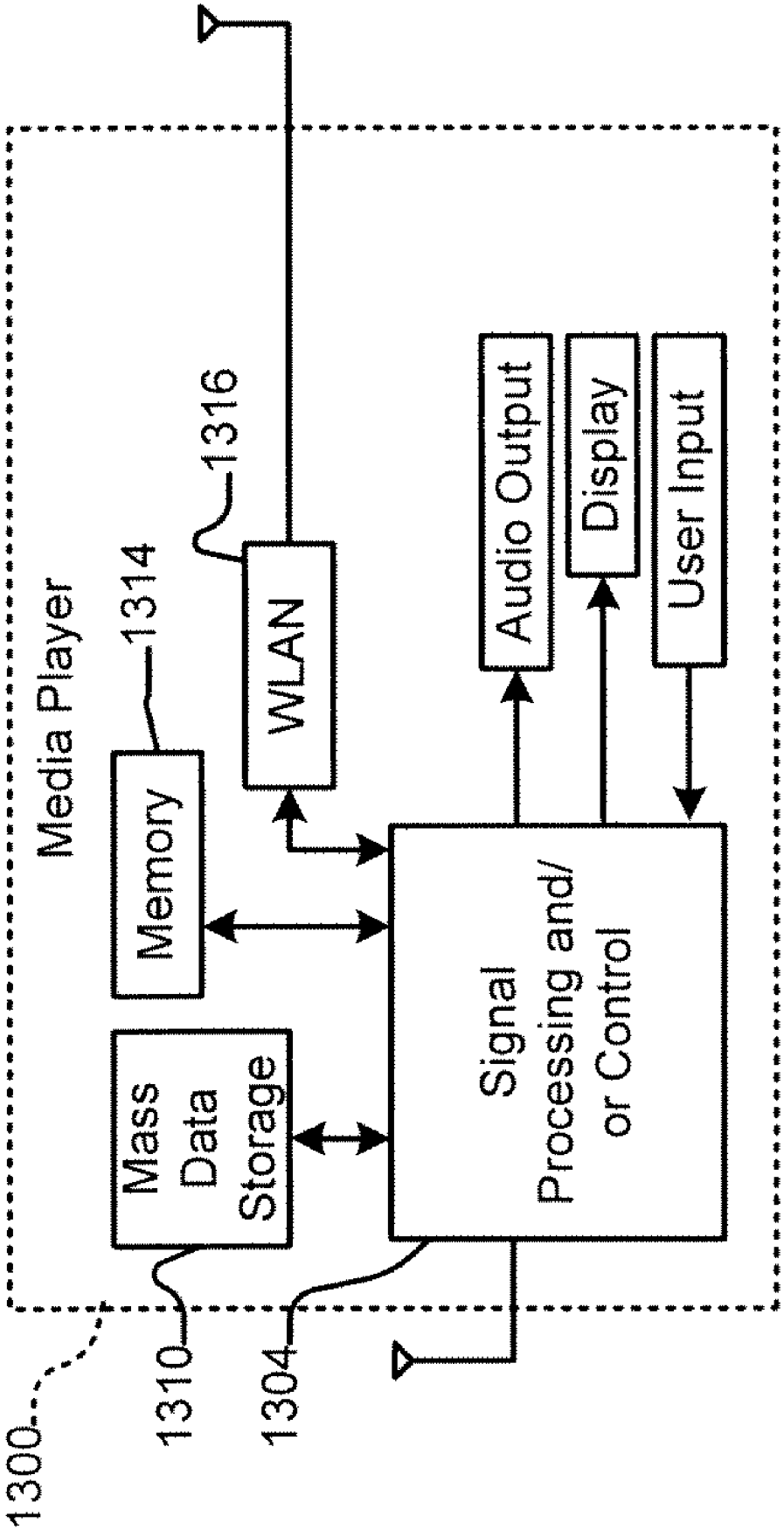
Media Player
1300
1310
1304
Mass Data Storage
Memory
1314
WLAN
1316
Signal Processing and/ or Control
Audio Output
Display
User Input

FIG. 13E

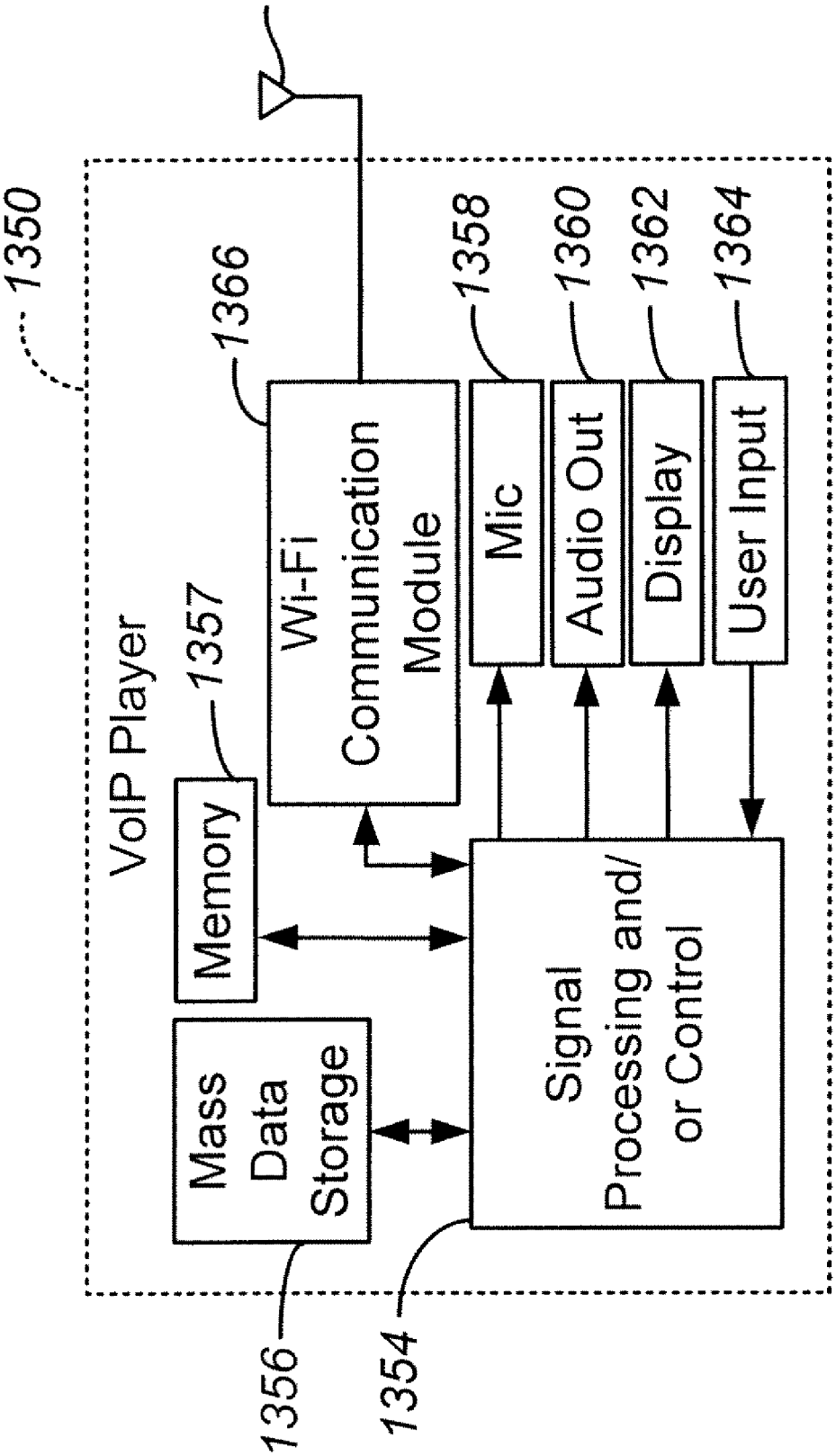
1350
VoIP Player
1357
Memory
Mass Data Storage
1356
1366
Wi-Fi Communication Module
Signal Processing and/ or Control
1354
1358
Mic
1360
Audio Out
1362
Display
1364
User Input

FIG. 13F

SIMULTANEOUSLY MAINTAINING BLUETOOTH AND 802.11 CONNECTIONS TO INCREASE DATA THROUGHPUT

CROSS-REFERENCES TO RELATES APPLICATIONS

[0001] The present application claims the benefit of U.S. Provisional Application No. 60/952,744, entitled "BT 802.11 AMP," filed on Jul. 30, 2007, which is hereby incorporated by reference herein in its entirety.

FIELD OF THE TECHNOLOGY

[0002] The present disclosure relates generally to communication systems, and more particularly, to wireless communication systems that jointly use a Bluetooth connection and an 802.11 connection to wirelessly communicate data between mobile communication devices.

DESCRIPTION OF THE RELATED ART

[0003] Wireless networks continue to increase in demand as consumers flock toward mobile computing devices and as manufacturers continue to develop wireless devices with greater capabilities. The proliferation of wireless networks is widespread and diverse. Many consumers use local area wireless networks in their homes to provide internet access to multiple devices. Many of those same consumers employ personal area wireless networks for interconnecting handheld or mobile devices. Finally many cities have begun arranging wireless networks to provide connectivity over large metropolitan areas.

[0004] There are numerous types of wireless networks and network protocols. Wireless local area networks (WLAN) typically include one of the various Institute of Electrical and Electronics Engineers (IEEE) 802.11 standard wireless protocols, first promulgated in 1999. These protocols include IEEE 802.11a, 802.11b, 802.11n, and 802.11g, which operate at different spectrum bands and/or different multiplexing or spread spectrum schemes to deliver various bit rates to devices on the network. These 802.11 standards are also implied hereinbelow when the term "WiFi" network or similar term is used hereinbelow. There is no implication in this document that devices described as part of a WiFi network have successfully passed conformance or interoperability testing for instance that testing providing by the Wi-Fi Alliance Special Interest Group.

[0005] Another type of wireless network is collectively known as a wireless personal area network (WPAN) which involves the interconnection of devices that are typically, but not necessarily, physically located closer together than wireless local area networks (WLAN). An example of a popular WPAN is based on the Bluetooth set of wireless protocol specifications as well as described in the IEEE 802.15.1 standard wireless protocols.

[0006] Either networking technology may support connections to multiple devices simultaneously including laptop computers, handheld computers, printers, storage media, cellular telephones or digital media players. In some examples, especially those involving WiFi networks, the wireless devices may be contained in other network equipment, such as access points, routers, switches, etc. to allow information transfer beyond the immediate wireless network and to a larger interconnected network.

[0007] Each networking technology has its own advantages. Bluetooth technology incorporates profiles that enable devices to perform predefined interoperable tasks independent of device manufacturer, operating system, or class of device. Although Bluetooth devices utilize interoperable profiles, these devices use a transceiver that typically provides lower data throughput and shorter range than devices utilizing WiFi technology. As such, it would be desirable to provide a system that is capable of increasing data throughput for sending Bluetooth profile data by utilizing two network protocols such as Bluetooth and WiFi to wirelessly communicate between mobile communication devices.

SUMMARY

[0008] In an embodiment, a method for communication between mobile communication devices on a wireless network, the method comprising: establishing a Bluetooth connection (BT connection); establishing an IEEE 802.11 connection; simultaneously maintaining both the BT connection and the IEEE 802.11 connection; and transmitting Bluetooth data packets (BT data packets) over the IEEE 802.11 connection.

[0009] In yet another embodiment, an apparatus for simultaneous communication on a wireless network, the apparatus comprising: a primary mobile communication device to establish one or more connections to one or more secondary mobile communication devices; the primary mobile communication device to establish a first connection and a second connection to at least one of the secondary mobile communication devices wherein the first connection is a Bluetooth connection (BT connection) and the second connection is an IEEE 802.11 connection; the primary mobile device to establish a third connection to another secondary mobile communication device wherein the third connection is an IEEE 802.11 connection; and the primary mobile communication device to simultaneously maintain both the BT connection and the IEEE 802.11 connections while the primary mobile communication device simultaneously transmits data to the secondary mobile communication devices.

[0010] In still another embodiment, an apparatus for simultaneous communication on a wireless network, the apparatus comprising: a primary mobile communication device to establish one or more connections to a secondary mobile communication device and an Access Point (AP); the primary mobile communication device to establish a first connection and a second connection to the secondary mobile communication device wherein the first connection is a Bluetooth connection (BT connection) and the second connection is an IEEE 802.11 connection; the primary mobile device to establish a third connection to the AP wherein the third connection is a WiFi or IEEE 802.11 connection; and the primary mobile communication device to simultaneously maintain both the BT connection and the IEEE 802.11 connections while the primary mobile communication device simultaneously transmits data to both the secondary mobile communication device and the AP.

BRIEF DESCRIPTION OF THE DRAWINGS

[0011] FIG. **1** is a block diagram illustrating a wireless network including a primary mobile communication device wirelessly communicating to secondary mobile communication devices;

[0012] FIG. **2** is a diagram illustrating a wireless network including a Bluetooth Alternate MAC Physical Layer (BT AMP) primary mobile communication device transferring data over a Bluetooth connection, a WiFi connection and Bluetooth Synchronous Connection Orientated (BT SCO) connection to secondary mobile communication devices;

[0013] FIG. **3** is a diagram illustrating a wireless network including a BT AMP primary mobile communication device transferring data over a Bluetooth connection, a WiFi Connection and Bluetooth Asynchronous Connectionless Link (BT ACL) connection to secondary mobile communication devices;

[0014] FIG. **4** is a diagram illustrating a wireless network including a BT AMP primary mobile communication device transferring data over a Bluetooth connection and an 802.11 connection to a secondary mobile communication device while simultaneously communicating to an Access Point (AP);

[0015] FIG. **5** is a block diagram illustrating an implementation of a BT AMP protocol stack of a mobile communication device;

[0016] FIG. **6** illustrates a signal diagram for device managers and controllers of a BT AMP mobile communication device discovering another BT AMP mobile communication devices;

[0017] FIG. **7** illustrates a signal diagram indicating the device managers and controllers of two mobile communication devices interacting to create a WiFi physical link;

[0018] FIG. **8** illustrates a signal diagram indicating the device managers and controllers of two mobile communication devices interacting to create a channel AMP between the mobile communication devices;

[0019] FIG. **9** illustrates a block diagram indicating the functional blocks in the PAL;

[0020] FIG. **10** is a diagram illustrating an 802.11 data packet/frame transmitted over an 802.11 connection between two mobile communication devices;

[0021] FIG. **11** is a diagram illustrating the transmission of a Bluetooth data packet and an 802.11 data packet over an 802.11 connection using a polling-the-slave-per-packet data transmission scheme;

[0022] FIG. **12** is a diagram illustrating the transmission of a Bluetooth data packet and an 802.11 data packet/frame over a Bluetooth connection and an 802.11 connection using a Transmission Opportunity (TxOP)-to-the-slave data transmission scheme; and

[0023] FIGS. **13**A-**13**F illustrate various devices in which a BT AMP layer may be added part of these devices protocol stack.

DETAILED DESCRIPTION

[0024] FIG. **1** is a block diagram of an example wireless network **100**, which may represent a short range or long range network and which may be an ad hoc topology or infrastructure topology with a primary mobile communication device **102** wirelessly communicating to secondary mobile communication devices **104** and **106**. In the illustrated example, the primary mobile communication device **102** may be a portable digital assistant (PDA), cellular phone, vehicle, media player, laptop computer, wireless supported desktop computers, gaming systems, wireless networking devices such as routers, switches, etc., or any other portable computing device. Similarly, the secondary mobile communication devices **104** and **106** may be any portable computing device as described herein with respect to the primary mobile communication device **102**. In a WLAN environment, the primary mobile communication device **102** and the secondary mobile communication devices **104** and **106** may be compliant with one of the accepted or contemplated wireless communication protocols, of which IEEE 802.11a, 802.11b, 802.11g, 802.11n and Bluetooth (BT), are examples. But these are only provided by way of example. The mobile communication devices **102**, **104**, **106** may operate under any two or more wireless protocols desired.

[0025] As shown in FIG. **1**, the primary mobile communication device **102** may wirelessly communicate with two secondary mobile communication devices **104** and **106**. The mobile communication device **102** may be a Bluetooth Alternate MAC Physical layer (BT AMP) mobile communication device. Likewise, the secondary mobile communication devices **104** and **106** may be BT AMP mobile communication devices. The primary mobile communication device **102** communicates with the secondary mobile communication devices **104** and **106** through a series of connections **108**, **110**, and **112**, independent of the order in which the connections are established. The data connection **108** may be a standard Bluetooth communication link for transmitting all types of data such as voice, images, text, or sound between the mobile communication devices **102** and **106**.

[0026] For wireless communications between the mobile communication devices **102** and **104**, two connections **110** and **112** may be used. First, a Bluetooth connection (BT connection) **110** may be established between the mobile communication devices **102** and **104** through a Bluetooth scanning and discovery process that creates a connection between the two mobile communication devices **102** and **104**. Once the BT connection **110** is established between the mobile communication devices **102** and **104**, a WiFi connection **112** may be established between the mobile communication devices **102** and **104**. These connections **110** and **112** are referred to herein collectively as the BT 802.11 connection, and may both operate at 2.4 GHz frequency.

[0027] Both the BT connection **110** and the WiFi connection **112** may be simultaneously maintained to transmit data. For example, configuration data may be transmitted over the BT connection **110**, including data used to create a physical link and a logical link. Multimedia data may be transmitted over the WiFi connection **112**, including data such as voice, text, images, sound, etc. Indeed, any type of data such as voice, images, text, or sound may be wirelessly transmitted on the WiFi connection **112** between the mobile communication devices **102** and **104**. The data may be transmitted in a BT 802.11 frame which includes 802.11 data and Bluetooth packet profile data. Alternatively, the BT connection **110** may be configured to wirelessly transmit data between the mobile communication devices **102** and **104**.

[0028] FIGS. **2**, **3**, and **4** provide an example of various implementations of the mobile communications devices **102**, **104** and **106**.

[0029] FIG. **2** is a diagram of a wireless network **200** having a primary mobile communication device **202** (shown as a mobile handheld computing device) capable of communicating with two secondary mobile communication devices **204** and **206** (**206** shown as a Bluetooth ready headset attached to a user). Communication with the device **206** may be achieved over a synchronous connection oriented (SCO) connection **208**. Communication with the device **204** is achieved using a BT connection **210** and a WiFi connection **212**. The SCO

connection **208** is used for transmitting voice data between the devices **206** and **204**. The BT connection **210** and the WiFi connection **212** may transmit configuration data and multimedia data, respectively, for example to form a BT 802.11 link. As with the other embodiments described herein, communication between devices **202** and **204** may occur simultaneously as communication between devices **202** and **206** is achieved.

[0030] A High Quality Voice 3 (HV3) profile may be sent in a SCO data packet to the secondary mobile communication device **206** over the SCO connection **208**. The SCO data packets may occupy 2 consecutive slots out of 6 time slots of SCO data packets, where 30 bytes of data are used in one SCO slot. The WiFi connection **212** may use the remaining 4 slots to transmit Transmission Control Protocol (TCP) packets having Bluetooth profile data. One example of the Bluetooth profile data is the Generic Object Exchange profile.

[0031] FIG. **3** is a diagram of a wireless network **300** similar to FIG. **2** but having a primary mobile communication device **302** wirelessly communicating with two secondary mobile communication devices **304** and **306** over an Asynchronous Connection Link (ACL) connection, **308**, BT connection **310** and WiFi connection **312**. In one embodiment, the ACL connection **308** may be established between the primary mobile communication device **302** and the secondary mobile communication device **306**. The ACL connection **308** may be an asynchronous (packet-switched) connection used to send multimedia data between two mobile communication devices. For example, Advanced Audio Distribution Profile (A2DP) data may be transferred between the mobile communication devices **302** and **306**. The A2DP data defines how high quality audio (stereo or mono) can be streamed from one device to another over a Bluetooth connection. In this way, music and other data may be streamed from a mobile phone to a wireless headset.

[0032] A BT connection **310** and a WiFi connection **312** may be used for transmitting configuration data and multimedia data between the mobile communication devices **302** and **304**. An ACL profile may be sent in an ACL data packet to the secondary mobile communication device **306** over the ACL connection **308**. The ACL profile may contain a 3-DH5 packet with a total A2DP overhead requirement of 450 kbps. The high rate A2DP with Sub Band Coding (SBC) is about 350 kbps. In one example, 6 slots out of 30 time slots of ACL packet data may be used for ACL traffic over the ACL connection **308**. The WiFi connection **312** may use the remaining 24 slots to transmit TCP packets having Bluetooth profile data. In another example, the ACL packets may occupy 4 consecutive slots out of 12. As such, the WiFi connection **312** may use the remaining 8 slots to transmit TCP packets having Bluetooth profile data.

[0033] FIG. **4** is a diagram of a wireless network **400** having a primary mobile communication device **402** wirelessly communicating with a secondary mobile communication device **406** and access point (AP) **404** (**404** shown as a wireless router). Alternatively, the AP **404** may be a portable base station, mobile base station, or any device capable of sending 802.11 packets. In one embodiment, the 802.11 connection **408** may be established between the primary mobile communication device **402** and the AP **404**. Over the 802.11 connection **408**, multimedia data may be transferred between the mobile communication device **402** and AP **404**. The 802.11 connection **408** may be used to transmit data between the mobile communication devices **402** and AP **404**. A BT connection **410** and a WiFi connection **412** may be used for transmitting configuration data and multimedia data between the mobile communication devices **402** and **406**.

[0034] The 802.11 connection **408** may be maintained with no active data transmission. The IEEE power save mode feature may be used by primary mobile communication device **402** when that device **402** chooses not to receive or transmit data from the AP **404**, but still maintain a connection to the AP **404**. In other examples, a Target Beacon Transmission Time (TBTT) of 100 ms and a Delivery Traffic Indication Message (DTIM) sent every beacon. As such, at least one of the following options may be used: 1) setting the primary mobile communication device **402** for waking up every TBTT to listen to TIM during a 5 ms period; 2) setting the primary mobile communication device **402** for waking up every DTIM to listen to Broadcast/multicast during a 5-10 ms period; and 3) setting the primary mobile communication device **402** for keeping alive frame every DTIM during a 1 ms period. Alternatively, any IEEE standard such as the PS polling scheme, Power Management Bit scheme, or similar standard may be used to regulate the transmission of data between primary mobile communication device **402** and the AP **404**.

[0035] FIG. **5** illustrates an implementation of a BT AMP protocol stack **500** that may be used in the mobile communication devices **102**, **104** and **106** to scan for and establish connections with other (e.g., secondary) Bluetooth and 802.11 capable devices. A protocol stack (also referred to as a communications stack) may include a particular software implementation of a computer networking protocol suite. As shown in FIG. **5**, the protocol stack **500** may include: a Bluetooth layer **502**, an 802.11 layer **504**, a logical link control (LLC) layer **506**, an 802.11 media access control (MAC) layer **508**, and a 802.11 physical (PHY) layer **510**. The Bluetooth layer **502** may include profiles block **512**, a logical link control and adaptation protocol (L2CAP) block **514**, and an AMP host controller interface (AMP HCI) block **516**. The 802.11 layer **504** may include applications (App) block **519**, transmission control protocol/user datagram protocol (TCP/UDP) block **520**, and internet protocol (IP) block **522**. The LLC layer **506** may include a Protocol Adaptation Layer (PAL) **518**.

[0036] The Bluetooth AMP protocol stack **500** receives an 802.11 frame that includes Bluetooth packet data at the 802.11 PHY layer **510**. Next, the 802.11 MAC layer **508** processes the 802.11 frame for addressing and channel access control mechanisms that make it possible for one or more network nodes to communicate within a multipoint network. Thereafter, the LLC layer **506** multiplexes/demulitplexes the 802.11 frame such that the 802.11 data portion and Bluetooth data portion both pass to their respective layers. The processing happens such that simultaneous communications may be achieved over both a Bluetooth connection and WiFi connection.

Creation of the Physical Link and Logical Links Between Mobile Communications Devices

[0037] The AMP HCI **512** creates a connection (e.g. physical link and logical link) between the BT AMP mobile communication devices. The AMP HCI **512** discovers and associates with another mobile communication device using a 'Create Link' command. A Link Handle signal is returned as a result of creating a physical link between two mobile communication devices. The Link Handle is used as a reference when creating a Logical Connection. The AMP physical link

is mapped to the Bluetooth physical link. The logical link is mapped to a connection handle.

[0038] In order to transfer data between the BT AMP mobile communication devices, a logical link is required. To create a logical connection, a 'Create Logical Link' command is called and a valid 'Link Handle' is passed as a reference. A 'Connection_Handle' command may be supplied to the host on the successful creation of a logical link.

[0039] Multiple logical links can be created over the physical link using the 'Create Logical Link' command and each is referenced by a 'Connection Handle.' The 'Connection Handle' may be used when transferring data and requesting Quality of Service. All data payloads should be encrypted.

[0040] To disconnect the physical link and the logical links, the AMP HCI **512** uses 'Disconnect Link' and 'Disconnect Connection' commands sent to another device sent to another device.

Data Transfer Between the Mobile Communication Devices

[0041] In one example, the AMP HCI **512** may transfer data between the host and the controller of the two mobile communication devices. For example, L2CAP PDU packets are transferred over the HCI physical transport (not shown), which transport provides flow control and packet mechanisms. As described earlier, the Connection Handles (akin to endpoints) designate the destination address of the data packets. These destination addresses are set up by the Connection mechanism as part of the control plane.

[0042] The received data is passed from the AMP layer (which includes LLC layer **506**, an 802.11 MAC layer **508**, and a 802.11 PHY layer **510**) to the PAL **518** based on organizationally unique identifier (OUI) and Bluetooth protocol headers. The data is then forwarded from the MAC layer **508** to the PAL **518** which forwards the data to the HCI physical transport. Next, the packets are received by the L2CAP **514** and de-multiplexed based on channel identifier (CID).

[0043] Next, the L2CAP data is sent and received over the HCI logical channels (not shown). The HCI physical transport provides a mechanism for the host and host controller to identify the HCI logical channel as well as the packet length for each packet sent over the HCI physical transport. The mapping of the HCI logical channels to AMP connections may be defined by the PAL specification. The HCI logical layer need not specify any data flow control. The flow control may be specified in the transport specification. Each AMP connection may have a logically distinct HCI and a unique Local_AMP_ID. If there is one HCI physical transport, then the HCI transport driver on the AMP mobile communication devices may require an extra layer of multiplexing in order to differentiate between the two AMP mobile communication devices that are in the same physical package. As a result, there may be only a single HCI transport driver, in some examples.

[0044] Referring back to FIG. **1** (in connection with FIG. **5**), the AMP HCI **512** iniates the BT connection **110** by performing a scan for other mobile communication devices having BT compatibility and WiFi compatibility. The AMP HCI **512** instructs the AMP managers and controllers to discover BT AMP mobile communication devices. The AMP managers are located in the host of the mobile communication device. The controllers are located in the physical layer of the mobile communication device.

[0045] An 802.11 beacon is not required for the discovery of BT AMP mobile communication devices. However, an 802.11 beacon may be used by the BT AMP mobile communication devices to advertise their presence to the BT AMP mobile communication device that is performing the scan.

[0046] For maintaining a Bluetooth connection, a scan may be performed for 18 slots of SCO/ACL data packets every 1.28 seconds. As such, the basic rate/extended data rate (BR/EDR) control link consumes 3-4 slots in approximately 2 ms. In another embodiment, BT 802.11 connection may use unused time from transmission of data.

[0047] After the scan of identification is complete, the WiFi connection may be created between the mobile communication devices by performing the following steps: generating a probe request signal; sending the probe request signal; and receiving a probe response signal. The BT connection may be a secure connection accomplished using a four way handshake implementation as described in the 802.11 standard. Further, a power save feature may be used in connection with the WiFi connection to transmit data. The BT AMP may control the power save mode or a standard 802.11 power save scheme may be used.

[0048] FIGS. **6**, **7** and **8** describe the interaction of AMP managers and controllers used to detect mobile communication devices that have BT AMP layers and create the BT 802.11 connection.

[0049] FIG. **6** illustrates a signal diagram **600** for the device managers and controllers of a BT AMP mobile communication device discovering another BT AMP mobile communication devices **102** and **104** of FIG. **1**. The diagram **600** represents a procedure for locating devices with BT AMP layers. Each device such as A and B devices may have device managers and controllers to gather AMP_INFO for establishing the BT connection. As shown in FIG. **6**, the AMP MGR **602** of Device A receives a AMP_INFO request signal **616** from a user interface of device A (not shown). Next, the 2.4 GHz controller **604** of device A sends the AMP_INFO request signal **614** to the 2.4 GHz controller **610** of device B. In turn, the 2.4 GHz controller **610** of device B **610** sends an Available-Info-response (AMP_info_List) signal **616** to the 2.4 GHz Controller **604** of device A. As a result, the AMP MGR **602** of device A sends a AMP_INFO confirm signal **618** to the user interface of device A.

[0050] The parameters passed in the AMP_INFO response signal are shown in Table 1:

TABLE 1

AMP__StatusEnumeration ENABLED or DISABLED. ENABLED indicates that the AMP is turned on, active and connectable. DISABLED indicates the AMP is turned off or in a low power state.
AMP__TypeEnumeration 2.4 GHz, WiMedia, etc. Indicates the type of the AMP.

TABLE 1-continued

FreeBW Integer 4 octets - 0x00000000-0xFFFFFFFE. An estimate of the amount of available bandwidth (free bandwidth) on the AMP specified as a data rate (kbps). It is only valid if the AMP__Status is ENABLED.
AMP__Block Octet String Variable Block of data containing AMP specific characteristics (e.g. supported data rates.)
MinDataSize Integer 4 octets 0x00000000-0xFFFFFFFF, To save power, devices may not want their AMP to be used unless the data transfer meets some minimum size. This parameter states that minimum size. The initiator controls the creation of the AMP link so this is just a hint to help the initiator determine if the AMP should be used for the transfer. "Don't care" is the default value.

[0051] FIG. **7** illustrates a signal diagram **700** indicating the device managers and controllers of two mobile communication devices interacting to create a WiFi link. In particular, the diagram **700** represents a procedure for creating the WiFi physical and logical links. The AMP MGR **702** of device A sends an HCI Get AMP Info. signal **714** to the AMP PAL **706** for device A. In response, the AMP PAL **706** for device A returns the AMP_INFO signal **716** to the AMP MGR **702** of device A. Next, the AMP MGR **702** of device A sends the HCI Get AMP Info. signal **714** to the AMP MGR **712** of device B. As a result, the AMP MGR **712** of device B sends the AMP_INFO signal **716** to the AMP PAL **708** of device B. Next, the AMP PAL **708** of device B sends an AMP_Get_Info(AMP_List) signal **718** to the AMP MGR **712** of device B. Also, the AMP PAL **708** of device B sends a HCI AMP_Enable_Medium signal **720** to the AMP MGR **702** of device A. Next, the AMP MGR **702** of device A receives a CREATE-AMP-LINK request signal **722** from the user interface of device A. Thereafter, the AMP MGR **702** of device A passes the CREATE-AMP-LINK request signal **722** to the AMP PAL **706** for device A. In response, the AMP PAL **706** for device A returns AMP_Command_complete signal **724** to the AMP MGR **702** of device A.

[0052] Next, the AMP_MGR of device A **702** sends an AMP_Create_Physical_Link Request signal **726** to the AMP_MGR **712** of device B. The AMP_Create_Physical_Link Request signal **726** may include the following parameters: Remote AMP_ID, Local AMP_ID, AMP_Assoc, Local MAC Address, PTK Encryption Key, and Channel Number. The AMP_Create_Physical_Link Request signal **726** may be sent by the initiating Bluetooth controller (BT controller) to create a BT AMP connection. The PTK Encryption key is the encryption key for data over the AMP connection. The AMP_Create_Physical_Link Request signal **726** may be required in order for the AMP PAL **708** to establish a physical link to another AMP device.

[0053] Next, the AMP_MGR **712** of device B sends the HCI AMP_Enable_Medium signal **720** to the AMP PAL **708** of device B. In turn, the AMP PAL **708** of device B sends a AMP_Command_complete signal **724** to the AMP_MGR **712** of device B. As a result, the AMP_MGR **712** of device B sends the AMP_Create_Physical_Link_Response signal **728** to the AMP_MGR **712** of device A. The AMP_Create_Physical_Link_Response signal **1028** may comprise the following parameters: Local AMP_ID, Remote AMP_ID, AMP_Assoc, Remote MAC Address, Channel Number, and Response Code.

[0054] The AMP_Create_Physical_Link_Response signal **728** may be sent by the destination BT controller to the initiating BT controller in response to a Create Physical Link Request. The AMP_Create_Physical_Link_Response signal **728** may be used in order for the PAL to establish a physical link to another AMP device.

[0055] Thereafter, the AMP_MGR **712** of device B sends a CREATE-AMP-LINK indication signal **730** to the user interface of device B. Next, the AMP_MGR **712** of device B sends a HCI_CreatePhysical_Link signal **732** to the AMP PAL **708** of device B. Also, the AMP_MGR **702** of device A sends a HCI_CreatePhysical_Link signal **732** to the AMP PAL **706** of device A. Next, the AMP PAL **706** of device A sends a Probe Request signal **734** to the AMP PAL **708** of device B. In response, the AMP PAL **708** of device B sends a Probe Response signal **736** to the AMP PAL **706** of device A. At this point, the AMP physical link is created.

[0056] Thereafter, the AMP PAL **706** of device A sends a HCI_CreatePhysical_Link signal **1032** to the AMP_MGR **1002** of device A. At the same time, the AMP PAL **708** of device B sends a HCI_CreatePhysical_Link signal **732** to the AMP_MGR **712** of device B. Next, both AMP_MGR **702** of device A and the AMP_MGR **712** of device B send CREATE-AMP-LINK confirm signal **738** to the user interface of device A.

[0057] FIG. **8** illustrates a signal diagram **800** indicating the device managers and controllers of two mobile communication devices interacting to create a channel AMP between the mobile communication devices. The diagram **800** represents a procedure for locating devices with BT AMP layers. Each device such as A and B devices may have device managers and controllers to gather AMP_info for establishing the BT connection. As shown in FIG. **8**, L2CAP **802** of device A receives a CREATE-CHANNEL AMP request signal **814** from the user interface of device A. Next, the L2CAP **802** of device A sends a HCI_Create_Logical_Link signal **816** to the AMP controller **806** of device A. In response, the AMP controller **806** of device A sends a HCI_Create_Logical_Link_Complete signal **818** to the L2CAP **802** of device A. Next, the L2CAP **802** of device A sends a Create_Channel_AMP_Request signal **820** to the L2CAP **812** of device B.

[0058] Thereafter, the L2CAP **812** of device B sends a HCI_Create_Logical_Link signal **816** to the AMP controller **808** of device B. In response, the AMP controller **808** of device B sends HCI_Create_Logical_Link_Complete signal **818** to the L2CAP **812** of device B. Next, the L2CAP **812** of device B sends a Create_Channel_AMP_Response signal **822** to the L2CAP **802** of device A. As a result, the L2CAP **802** of device A sends a HCI_Create_Logical_Link_Active signal **824** to the AMP controller **806** of device A. At the same time, the L2CAP **812** of device B sends a HCI_Create_Logical_Link_Active signal **824** to the AMP controller **808** of device B. Next, the L2CAP **802** of device A sends a Create_Channel_AMP confirm signal **826** to the user interface of

device A. Likewise, the L2CAP **812** of device B sends a Create_Channel_AMP indication signal **828** to the user interface of device B.

[0059] Thereafter, the L2CAP **802** of device A receives a data request signal from the user interface of device A. Next, the L2CAP **802** of device A sends a AMP HCI Data Request signal **832** to the AMP controller **806** of device A. Thereafter, the AMP controller **806** of device A sends I-Frame signal **834** to the AMP controller **808** of device B. As a result, the AMP controller **808** of device B sends an AMP HCI Data Ind signal **836** to the L2CAP **812** of device B. In response, the L2CAP **812** of device B sends an AMP HCI Data Request signal **838** to the AMP controller **808** of device B. Next, the AMP controller **808** of device B sends an RR signal **840** to the AMP controller **806** of device A. In turn, the AMP controller of device A **806** sends an AMP HCI Data Ind **842** signal to the L2CAP **802** of device A.

[0060] The following are descriptions of various signals used in the creation of the logical and physical links between the two mobile communication devices described above.

[0061] The AMP profile request may be sent by the BT controller to the AMP device. The AMP profile request contains the PTK encryption key which should be used by the 802.11 AMP. At the destination, the AMP profile request may contain the initiator MAC address, channel to be used and the PTK encryption key. The AMP profile request may also be a request for the MAC address for the remote AMP device. The AMP profile request may be used for the PAL to establish a physical link to another AMP device. The PAL **518** sends the MAC address of the 802.11 interface in the response. The PAL may also configure the 802.11 AMP MAC to use the PTK. At the destination, the PAL may configure the 802.11 AMP MAC channel number, receive MAC address and PTK. The PAL also may send the MAC address of the 802.11 interface in the response.

[0062] The AMP profile response may be sent by the AMP device to the BT controller. The AMP profile response may contain the MAC address of the 802.11 AMP. The AMP profile response may contain the channel number that can be used for the 802.11 AMP link. The AMP profile response may be used for the PAL to establish a physical link to another AMP device. The PAL may return the MAC address of the 802.11 interface in the response. The PAL may also return the channel number that should be used for 802.11 AMP. The destination 802.11 AMP turns on its radio.

[0063] The AMP Create Physical Link Command may cause the PAL to perform all the required actions (turn on the radio, set appropriate channel, or set remote MAC address) in order to make an association to the remote device. If the AMP physical link is already present the PAL shall generate an AMP Physical Link Complete event. The AMP Create Physical Link Command only creates an association between devices and a logical link. Further, AMP Create Physical Link Command must be created in order to transfer data. The AMP Create Physical Link Command may be used for the PAL to establish a physical link to another AMP device. The PAL configures the 802.11 MAC to send a PROBE REQ signal to the remote querying its presence.

[0064] The AMP Physical Link Created Event may indicate to the host that the local AMP device and the one specified by the link parameters are associated. The physical link handle is used in further communication between the AMPs to create a logical connection over this link and subsequently send and receive data. The AMP Physical Link Created Event may include the following parameters: AMP_Physical_Link_Handle, AMP_Assoc, and Encryption_Status. The Physical Link Complete Event may be used as a response for the Create Phyiscal Link command. The event may be used to indicate whether a 'Create Physical Link' was successful or not. The Physical Link Complete Event may be generated by the PAL in response to a probe response from the remote 802.11 MAC.

[0065] The AMP Physical Link Disconnect Command may be used to signal to the PAL to terminate an existing physical link. The AMP Physical Link Disconnect command may include the following parameter: AMP_Physical_Link_Handle. The AMP Physical Link Disconnect command may cause the PAL to perform all the required actions in order to disassociate itself from the device referenced by the Physical Link Handle. The AMP Physical Link Disconnect command may generate a Physical Link Disconnection Complete event. Local links may be disconnected by the AMP. In this embodiment, there is no corresponding MAC Sublayer Management Entity (MLME) command. Further, the PAL may be used to tear down individual logical links and indicate back to L2CAP.

[0066] The AMP Create Logical Link command may cause the PAL to perform all the required actions in order to make a logical link to the remote device. The AMP Create Logical Link command may include the following parameters: AMP_Physical_Handle and AMP_Flow_Spec. Specific constraints of the reservation QoS may be specified by the host using both Create Channel and QoS modification commands. The AMP Create Logical Link command may be used in order for the PAL to establish a unidirectional logical link to another AMP device. The PAL may set up classifiers to classify packet based on flow spec to appropriate Transport Control (TC).

[0067] The AMP Logical Link Complete Event may indicate to the host that the local AMP device and the one specified by the link parameters are connected via an agreed QoS channel. On receipt of the event, a secure encrypted channel is available for data transmission. The AMP Logical Link Complete Event may be used in order for the PAL to establish a unidirectional logical link to another AMP device. The PAL may set up classifiers to classify packet based on flow spec to appropriate TC and return with the Complete Event.

[0068] The AMP Logical Link Disconnect command may inform the AMP of the termination of the logical link. The AMP Logical Link Disconnect command may include the following parameters: AMP Physical_Handle and AMP_Logical_Handle. The PAL may reset the classifier attached to the logical link.

[0069] The AMP Logical Link Disconnect Event may inform the host that the logical link has been terminated. The AMP Logical Link Disconnect command may include the following parameter: AMP_Physical_Handle and AMP_Logical_Handle. The AMP Logical Link Disconnect Command may be used to tear down a logical link.

[0070] Referring back to FIG. **5**, the AMP HCI **512** controls the PAL **518** to assist with the logical connections and physical connection between the mobile devices.

[0071] FIG. **9** illustrates a block diagram **900** indicating the functional blocks in the PAL. As shown in FIG. **9**, the PAL may contain a Security Manager **904**, a Connection Manager **906**, an Admission Control block **908**, a Digital Medium/Media Access Control (DME/MAC) policies **910** and AMP Connection block **912**.

[0072] The connection manager **906** is configured to realize connection requests and manage AMP connections. The connection manager **906** may use the services of the Security Manager **904** to perform security checks. Additionally, the Connection Manager **906** may use the services of the Admission Control **908** to allow flow control.

[0073] The AMP Connection block **912** may be configured to represent a single connection. This single connection includes a logical and physical link. The AMP Connection **912** may also be configured to request the Quality of Service (QoS) contracts. The AMP Connection **912** may also comprise a Link Manager and Stream Manager. The Link Manager may be configured to discover and establish a communication link. The Stream Manager may be configured to maintain logical links.

[0074] The Admission Control block **908** may be configured to provide admission control based on QoS request. Additionally, the Admission Control **908** may perform other tasks as known by those skilled in the art. The Security Manager **904** may be configured to manage four way authentication and encryption for UWB link. Further, the Security Manager **904** may be configured to plum the PTK encryption key.

[0075] FIG. **10** illustrates an 802.11 data packet/frame **1000** transmitted over the BT 802.11 connection between the mobile communication devices **102** and **104** shown in FIG. **1**. As shown in FIG. **10**, the data packet/frame **1000** may include two portions: a TCP frame **1002** and a TCP acknowledgement (ACK) **1004**. The TCP frame **1002** may include: DCF interframe space (DIFS) block **1006**; backoff block **1008**; TCP data frame block **1010**; short interframe space (SIFS) block **1012**; and 802.11 PHY ACK block **1014**. The TCP acknowledgement portion may include: DIFS block **1016**; backoff block **1018**; TCP data frame block **1020**; SIFS block **1022**; and 802.11 PHY ACK block **1024**.

[0076] FIGS. **11** and **12** show two transmission schemes that may be used to transmit BT data packets and 802.11 data packets between mobile communication devices **102**, **104** and **106** shown in FIG. **1**. The transmission of BT packets and 802.11 packets may be achieved by at least two ways: 1) polling-the-slave-per-packet transmission scheme and 2) providing-a-transmission opportunity (TxOP)-to-slave transmission scheme.

[0077] FIG. **11** illustrates the polling of Bluetooth data and 802.11 data in a packet/frame **1100** transmitted over the BT 802.11 connection from the slave to master using the polling-the-slave-per-packet data transmission scheme. As shown in FIG. **11**, the data packet/frame **1100** may contain the following portions: BT-Poll+(Data) (Master) block **1102**; BT-Data+(Slave) block **1104**; PS-Poll+(Data) (Master) block **1106**; 802_11 data block **1108**; ACK block **1110**; DIFS+backoff block **1112**; and MaxMPDUTime block **1114**. Each slot for the data packet is 625 μs.

[0078] In one example (referring to FIG. **11** in conjunction with FIG. **2**), the primary mobile communication device **202** sends a BT-Poll+(Data)(Master) block signal **1102** to a secondary mobile communication device **206** over the SCO connection **208**. In response, the secondary mobile communication device **206** sends a BT-Data+(Slave) block signal **1104** over the SCO connection **208**. At the same time, the primary mobile communication device **202** sends a PS-Poll+(Data) (Master) block signal **1106** to the secondary mobile communication device **204** over the WiFi connection **212**. Next, the primary mobile communication device **204** sends 802_11 data block signal **1108** over the WiFi connection **212**. The 802_11 data block signal **1108** includes Bluetooth profile data. In response, the secondary mobile communication device **212** sends ACK block signal **1110** to the primary mobile communication device **202** over the WiFi connection **212**. The data transmission may be repeated as many times as possible for the duration of the transmission cycle.

[0079] The duration of the data transmission over the SCO connection **208** and WiFi connection **212** may be based on the link manager protocol (LMP) MaxSlotSize value transmitted to the slave. In another example, the slave may identify the end of the transmission of Bluetooth packets and transmit 802.11 packets, after which, the master may receive 802.11 packets and stop scheduling Bluetooth slots so as to prevent simultaneous transmission of packets. The packet transmission time from the slave to the master does not exceed MaxMPDUTime. The master may not poll the slave if time left to transmit MAC Protocol Data Unit (MPDU) is less than MaxMPDUTime.

[0080] In some examples, transmission from master to slave may be controlled by the master. For example, the master may transmit 802.11 packets following Distributed Coordination Function (DCF) rules when no BT packet transmission is scheduled. The master may schedule the transmission from slave to master. The slave may or may not know when the master is transmitting ACL traffic to the slave. Additionally, the slave may not know when the master polls other slave for data transmission.

[0081] FIG. **12** illustrates BT packets and 802.11 packets in a data packet/frame **1200** transmitted from the slave to the master by providing a Transmission Opportunity (TxOP) to the slave. As shown in FIG. **12**, the data packet/frame **1200** may include the following portions: BT-Poll+(data) (master) block **1202**; BT-data+(slave) block **1204**; 802.11 (TxOp grant) block **1206**; ACK block **1208**; TxOP segment block **1210**; DIFS+backoff block **1214**; and SIFS block **1216**. The TxOP segment **1210** may include three (3) 802_11 data packets blocks **1212** and three (3) ACK blocks **1208**. Each slot for the data packet is 625 μs.

[0082] In one example (referring to FIG. **12** in conjunction with FIG. **2**), the primary mobile communication device **202** sends a BT-Poll+(Data)(Master) block signal **1202** to a secondary mobile communication device **206** over the SCO connection **208**. In response, the secondary mobile communication device **206** sends a BT-Data+(Slave) block signal **1204** over the SCO connection **208**. At the same time, the primary mobile communication device **202** sends a 802.11 (TxOp grant) block signal **1206** to the secondary mobile communication device **204** over the WiFi connection **212**. In response, the secondary mobile communication device **204** sends an ACK block signal **1208** to the primary mobile communication device **202** over the WiFi connection **212**. Next, the primary mobile communication device **204** sends (802_11 data) block signal **1212** over the WiFi connection **212**. The (802_11 data block) signal **1212** may include Bluetooth profile data. In response, the secondary mobile communication device **212** sends another ACK block signal **1208** to the primary mobile communication device **202** over the WiFi connection **212**. The data transmission of (802_11 data) block signal **1212** and ACK block signal **1208** may be repeated as many times as possible for the duration of the transmission cycle.

[0083] In one embodiment, the master may provide a TxOP grant to the slave, and the slave may use Transmission TxOP opportunity to transmit multiple MAC Protocol Data Unit

(MPDU) to slave or master. The TxOP opportunity may be identified by at least one of the following ways: 1) duration and 2) absolute end time. For the first, the desired duration should be exact. Additionally, the packet that contains the duration should undergo zero back off, and be inserted by the designated hardware.

[0084] When identified by absolute end time, both mobile communication devices may be synchronized to the same time base using beacons. Further, both mobile communication devices may transmit beacons with the time stamp inserted by the designated hardware. The steps for identifying the TxOP by the absolute end time may include: sending a probe response from the master mobile communication device to the slave mobile communication device; embedding the absolute end time in the data packet; computing the delta of the timing synchronization function (TSFs); and determining the local absolute end time. A processor (stored in the mobile communication devices) may compute the delta of the TSFs and determine its local absolute end time. In still another example, the probe response has the TSF of the transmitter (embedded in the mobile communication devices). In yet another example, the transceiver may not transmit past its local absolute end time. In a similar fashion, the master may not transmit the probe response packet if the end time is passed.

[0085] FIGS. **13**A-**13**F illustrate various devices in which a BT AMP layer may be added part of these devices protocol stack, as described above.

[0086] Referring now to FIG. **13**A, such techniques may be utilized in a high definition television (HDTV) **1320**. HDTV **1320** includes a mass data storage **1327**, an HDTV signal processing and control block **1322**, a wireless interface **1329** and memory **1328**. HDTV **1320** receives HDTV input signals in either a wired or wireless format and generates HDTV output signals for a display **1326**. In some implementations, signal processing circuit and/or control circuit **1322** and/or other circuits (not shown) of HDTV **1320** may process data, perform coding and/or encryption, perform calculations, format data and/or perform any other type of HDTV processing that may be required. In one embodiment, a logic unit **1324** may manage data communication with a remote unit **1323** over a suitable wired or wireless connection, such as Bluetooth or 802.11. The logic unit **1324**, remote device **1323**, or both, may use the devices and techniques described above. The remote unit **1323** may be a cordless headset or remote viewer that accepts data streamed from the logic unit **1324**. Alternatively, the remote unit **1323** may be a media player, such as a personal portable player or a personal computer that streams data to the logic unit **1324**.

[0087] The HDTV **1320** may communicate with a mass data storage **1327** that stores data in a nonvolatile manner such as optical and/or magnetic storage devices. HDTV **1320** may be connected to memory **1328** such as RAM, ROM, low latency nonvolatile memory such as flash memory and/or other suitable electronic data storage. HDTV **1320** also may support connections with a suitable wireless connection via a wireless network interface **1329**. The wireless network interface **1329**, the HDTV signal processing and control block **1322**, may all also implement a BT AMP configuration for transmitting data via the wireless network **1329** or to the display **1326**, respectively.

[0088] Referring now to FIG. **13**B, such techniques may be utilized in a vehicle **1330**. The vehicle **1330** includes a control system that may be a powertrain control system **1332**, as well as a wireless interface **1348**. The powertrain control system **1332** may receive inputs from one or more sensors **1336** such as temperature sensors, pressure sensors, rotational sensors, airflow sensors and/or any other suitable sensors and/or generate one or more output control signals **1338** such as engine operating parameters, transmission operating parameters, and/or other control signals.

[0089] Control system **1340** may likewise receive signals from input sensors **1342** and/or output control signals to one or more output devices **1344**. In some implementations, control system **1340** may be part of an anti-lock braking system (ABS), a navigation system, a telematics system, a vehicle telematics system, a lane departure system, an adaptive cruise control system, a vehicle entertainment system such as a stereo, DVD, compact disc and the like.

[0090] The powertrain control system **1332** may be connected to memory **1347** such as RAM, ROM, low latency nonvolatile memory such as flash memory and/or other suitable electronic data storage. The powertrain control system **1332** also may support connections with a external devices via a wireless network interface **1348**. In one exemplary embodiment, the control system **1340** may include a logic unit for data communication with a remote device **1343**. For example, the remote device **1343** may be an entertainment unit supported by the control system **1340**. In another embodiment, the remote device **1343** may be a source of data, such as a personal media player. In yet another embodiment, the remote device **1343** may be a removable BT AMP diagnostic unit.

[0091] Referring now to FIG. **13**C, such techniques may be used in a mobile phone **1350**. The mobile phone **1350** may include a cellular antenna **1351** and either or both signal processing and/or control circuits, which are generally identified in FIG. **13**C at **1352**. A logic unit **1353** may be used to support low power data streaming. The mobile phone **1350** may also include a wireless network interface **1368**. In some implementations, mobile phone **1350** includes a microphone **1356**, an audio output **1358** such as a speaker and/or audio output jack, a display **1360** and/or an input device **1362** such as a keypad, pointing device, voice actuation and/or other input device. A remote device **1359**, for example, a hands-free unit, may send and receive data to the signal processing and/or control circuits **1352**. The signal processing and/or control circuits **1352** may also process data, perform coding and/or encryption, perform calculations, format data and/or perform other mobile phone functions.

[0092] Mobile phone **1350** may communicate with a mass data storage **1364** that stores data in a nonvolatile manner such as optical and/or magnetic storage devices, for example hard disk drives HDD and/or DVDs. Mobile phone **1350** may be connected to memory **1366** such as RAM, ROM, low latency nonvolatile memory such as flash memory and/or other suitable electronic data storage. Mobile phone **1350** also may support connections with a wireless network via a wireless network interface **1368** that may use BT AMP techniques for communication with automotive accessories, such as in-vehicle displays, speakers, or personal accessories, such as the hands-free unit **1359**.

[0093] Referring now to FIG. **13**D, such techniques may be utilized in a set top box **1380**. The set top box **1380** may include a signal processing and/or control circuit which is generally identified in FIG. **13**D at **1384**. Set top box **1380** receives signals from a source **1389**, such as a broadband source or entertainment system, and outputs standard and/or

high definition audio/video signals suitable for a display **1388** such as a television and/or monitor and/or other video and/or audio output devices. Signal processing and/or control circuit **1384** and/or other circuits (not shown) of the set top box **1380** may process data, perform coding and/or encryption, perform calculations, format data and/or perform any other set top box function.

[0094] Set top box **1380** may communicate with mass data storage **1390** that stores data in a nonvolatile manner. Mass data storage **1390** may include optical and/or magnetic storage devices for example hard disk drives HDD and/or DVDs. Set top box **1380** may be connected to memory **1394** such as RAM, ROM, low latency nonvolatile memory such as flash memory and/or other suitable electronic data storage. Set top box **1380** also may support connections with a wireless network via a suitable wireless network interface **1396**. The BT AMP configuration may also be used by the wireless network for transmission of data to a remote device **1389**.

[0095] Referring now to FIG. **13**E, such techniques may be used in a media player **1300**. The media player **1300** may include either or both signal processing and/or control circuits, which are generally identified in FIG. **13**E at **1304**, a wireless interface **1316** and/or mass data storage **1310** of the media player **1300**. In some implementations, media player **1300** includes a display **1307** and/or a user input **1308** such as a keypad, touchpad and the like, that may be connected via a remote interface, such as Bluetooth. In some implementations, media player **1300** may employ a graphical user interface (GUI) that typically employs menus, drop down menus, icons and/or a point-and-click interface via display **1307** and/or user input **1308**. Media player **1300** further includes an audio output **1309** such as a speaker and/or audio output jack or wireless connections to a headset **1311**, via Bluetooth, for example, or another appropriate wireless protocol. The headset **1311** may receive data from the signal processing and/or control circuits **1304**. Signal processing and/or control circuits **1304** and/or other circuits (not shown) of media player **1300** may process data, perform coding and/or encryption, perform calculations, format data and/or perform any other media player function, such as implement a logic unit for the BT AMP layer.

[0096] Media player **1300** may communicate with mass data storage **1310** that stores data such as compressed audio and/or video content in a nonvolatile manner. In some implementations, the compressed audio files include files that are compliant with MP3 format or other suitable compressed audio and/or video formats. The mass data storage may include optical and/or magnetic storage devices for example hard disk drives HDD and/or DVDs. Media player **1300** may be connected to memory **1314** such as RAM, ROM, low latency nonvolatile memory such as flash memory and/or other suitable electronic data storage. Media player **1300** also may support connections with a wireless network via a wireless network interface **1316**. The use of BT AMP techniques may also be applied to data transmitted via the wireless network interface **1316**, for example, from a remote device **1317**. The remote device **1317** may be a server, personal computer, or DVD player used to download media objects to the media player **1300**. Alternatively, the remote device **1317** may be another media player and BT AMP may be used for sharing media between the media player **1300** and the remote device **1317**.

[0097] Referring to FIG. **13**F, such techniques may be utilized in a Voice over Internet Protocol (VoIP) phone **1350**. The VoIP phone **1350** may include an antenna and either or both signal processing and/or control circuits, which are generally identified in FIG. **13**F at **1354**, a wireless interface **1366** and/or mass data storage of the VoIP phone **1350**. In some implementations, VoIP phone **1350** includes, in part, a microphone **1358**, an audio output **1360** such as a speaker and/or audio output jack, a display monitor **1362**, an input device **1364** such as a keypad, pointing device, voice actuation and/or other input devices. Any of the input or output elements could be remote and connected via a network, such as, Bluetooth, the wireless interface **1366**, or both. Signal processing and/or control circuits **1354** and/or other circuits (not shown) in VoIP phone **1350** may process data, perform coding and/or encryption, perform calculations, format data and/or perform other VoIP phone functions, including support for low power data streaming.

[0098] VoIP phone **1350** may communicate with mass data storage **1356** that stores data in a nonvolatile manner such as optical and/or magnetic storage devices, for example hard disk drives HDD and/or DVDs. VoIP phone **1350** may be connected to memory **1357**, which may be a RAM, ROM, low latency nonvolatile memory such as flash memory and/or other suitable electronic data storage. VoIP phone **1350** is configured to establish communications link with a VoIP network via a broadband Internet Protocol (IP) connection (not depicted). The wireless interface **1366** may be used to support the IP connection, but may also be used to communicate with a cordless handset **1353** used in a telephone call. Low-power data streaming techniques may be used when communicating data via the wireless interface **1366**. Low power data streaming may also be used for a connection to an accessory **1361**, such as a BT AMP Bluetooth headset, coupled to the microphone **1358** and audio output **1360** connections.

[0099] The various blocks, operations, and techniques described above may be implemented in hardware, firmware, software, or any combination of hardware, firmware, and/or software. When implemented in software, the software may be stored in any computer readable memory such as on a magnetic disk, an optical disk, or other storage medium, in a RAM or ROM or flash memory of a computer, processor, hard disk drive, optical disk drive, tape drive, etc. Likewise, the software may be delivered to a user or a system via any known or desired delivery method including, for example, on a computer readable disk or other transportable computer storage mechanism or via communication media. Communication media typically embodies computer readable instructions, data structures, program modules or other data in a modulated data signal such as a carrier wave or other transport mechanism. The term "modulated data signal" means a signal that has one or more of its characteristics set or changed in such a manner as to encode information in the signal. By way of example, and not limitation, communication media includes wired media such as a wired network or direct-wired connection, and wireless media such as acoustic, radio frequency, infrared and other wireless media. Thus, the software may be delivered to a user or a system via a communication channel such as a telephone line, a DSL line, a cable television line, a wireless communication channel, the Internet, etc. (which are viewed as being the same as or interchangeable with providing such software via a transportable storage medium). When implemented in hardware, the hardware may comprise one or more of discrete components, an integrated circuit, an application-specific integrated circuit (ASIC), etc.

[0100] While the present invention has been described with reference to specific examples, which are intended to be illustrative only and not to be limiting of the invention, it will be apparent to those of ordinary skill in the art that changes, additions or deletions in addition to those explicitly described above may be made to the disclosed embodiments without departing from the spirit and scope of the invention.

What is claimed is:

1. A method for communication between mobile communication devices on a wireless network, the method comprising:

establishing a Bluetooth connection (BT connection);

establishing an IEEE 802.11 connection;

simultaneously maintaining both the BT connection and the IEEE 802.11 connection; and

transmitting Bluetooth data packets (BT data packets) over the IEEE 802.11 connection.

2. The method of claim **1**, wherein the BT data packets are transmitted over the IEEE 802.11 connection in an IEEE 802.11 data frame.

3. The method of claim **1**, wherein the BT data packets include a Bluetooth profile (BT profile).

4. The method of claim **3**, wherein establishing the BT connection further comprises performing a scan for one or more mobile communication devices that have an available Bluetooth Alternate MAC Physical layer (BT AMP layer).

5. The method of claim **4**, wherein the established IEEE 802.11 connection uses unused time for transmitting BT data packets.

6. The method of claim **1**, wherein establishing the BT connection further comprises:

generating a probe request signal from the Alternate Media Access Control Physical Protocol Abstraction Layer (AMP PAL) of a primary mobile communication device;

transmitting the probe request signal from the AMP PAL of the primary mobile communication device; and

receiving a probe response signal from an AMP PAL of a secondary mobile communication device.

7. An apparatus for simultaneous communication on a wireless network, the apparatus comprising:

a primary mobile communication device to establish one or more connections to one or more secondary mobile communication devices;

the primary mobile communication device to establish a first connection and a second connection to at least one of the secondary mobile communication devices wherein the first connection is a Bluetooth connection (BT connection) and the second connection is an IEEE 802.11 connection;

the primary mobile device to establish a third connection to another secondary mobile communication device wherein the third connection is an IEEE 802.11 connection; and

the primary mobile communication device to simultaneously maintain both the BT connection and the IEEE 802.11 connections while the primary mobile communication device simultaneously transmits data to the another secondary mobile communication device.

8. The apparatus of claim **7**, wherein the data is Bluetooth data packets (BT data packets).

9. The apparatus of claim **7**, wherein the data is IEEE 802.11 data packets.

10. The apparatus of claim **9**, wherein the primary mobile communication device schedules the transmission of BT data packets and IEEE 802.11 data packets.

11. The apparatus of claim **10**, wherein the primary mobile communication device schedules the transmissions of IEEE 802.11 data packets after the transmission of BT data packets using a polling-the-slave-per-packet transmission scheme.

12. The apparatus of claim **11**, wherein the primary mobile communication device is to poll the one or more secondary mobile communication devices to schedule transmission.

13. The apparatus of claim **11**, wherein the primary mobile communication device is to poll the one or more secondary mobile communication devices after transmission of BT data packets.

14. The apparatus of claim **11**, wherein the primary mobile communication device is to poll the one or more secondary mobile communication devices, and the one or more secondary mobile communication devices in response are to allow the primary mobile communication device to schedule the transmission of BT data packets and IEEE 802.11 data packets.

15. The apparatus of claim **11**, wherein the primary mobile communication device will not poll the one or more secondary mobile communication devices if an amount of time before a next schedule transmission of BT data packets is below a threshold amount of time.

16. The apparatus of claim **15**, wherein the one or more secondary mobile communication devices will cease transmission of BT data packets if the threshold amount of time expires.

17. The apparatus of claim **10**, wherein the primary mobile communication device schedules the transmissions of BT data packets and IEEE 802.11 data packets based on the time between Bluetooth scheduled transmissions using a Transmission Opportunity (TxOP)-to-the-slave transmission scheme.

18. The apparatus of claim **17**, wherein the primary mobile communication device grants a TxOP duration based on a time available between Bluetooth master scheduled transmissions.

19. The apparatus of claim **17**, wherein the primary mobile communication device schedules the transmissions of BT data packets and IEEE 802.11 data packets such that the BT data packets and IEEE 802.11 data packets do not interfere.

20. The apparatus of claim **7**, wherein the another secondary mobile communication device is an Access Point (AP).

21. An apparatus for simultaneous communication on a wireless network, the apparatus comprising:

a primary mobile communication device to establish one or more connections to a secondary mobile communication device and an Access Point (AP);

the primary mobile communication device to establish a first connection and a second connection to the secondary mobile communication device wherein the first connection is a Bluetooth connection (BT connection) and the second connection is an IEEE 802.11 connection;

the primary mobile device to establish a third connection to the AP wherein the third connection is a WiFi or IEEE 802.11 connection; and

the primary mobile communication device to simultaneously maintain both the BT connection and the IEEE 802.11 connections while the primary mobile communication device simultaneously transmits data to both the secondary mobile communication device and the AP.

22. The apparatus of claim **21**, wherein the data is Bluetooth data packets(BT packet data).

23. The apparatus of claim **21**, wherein the data is IEEE 802.11 data packets.

24. The apparatus of claim **21**, wherein the AP is a wireless router.

25. The apparatus of claim **21**, wherein the primary mobile communication device is operable to simultaneously receive data from both of the secondary mobile communication devices while the primary mobile communication device simultaneously maintains both the BT connection and the IEEE 802.11 connections.

26. The apparatus of claim **21**, wherein the primary mobile communication device schedules the transmissions of BT data packets and IEEE 802.11 data packets using a polling-the-slave-per-packet transmission scheme.

* * * * *