US 20070135046A1

(19) United States

(12) Patent Application Publication

(10) Pub. No.: US 2007/0135046 A1

(43) Pub. Date: Jun. 14, 2007

Kapur et al.

(54) METHOD AND SYSTEM FOR BLUETOOTH[00ab] COMMON SIGNALING FOR NON-BLUETOOTH[00ab] DATA CHANNELS

(76) Inventors: **Ash Kapur**, Frederick, MD (US); **Victor G. Zhodzishsky**, North Potomac, MD (US)

Correspondence Address:
MCANDREWS HELD & MALLOY, LTD
500 WEST MADISON STREET
SUITE 3400
CHICAGO, IL 60661

(21) Appl. No.: 11/430,401

(22) Filed: May 9, 2006

Related U.S. Application Data

(60) Provisional application No. 60/750,434, filed on Dec. 14, 2005.

Publication Classification

(51) Int. Cl.
H04B 7/00 (2006.01)

(52) U.S. Cl. 455/41.2

(57) **ABSTRACT**

Methods and systems for processing data are disclosed and may include establishing a non-Bluetooth® connection between at least two Bluetooth®-enabled devices utilizing Bluetooth® protocol. Data may be communicated between the at least two Bluetooth®-enabled devices utilizing the established non-Bluetooth® connection. Data may be received via the established non-Bluetooth® connection. The received data may include uncompressed audio data. The established non-Bluetooth® connection may include a local area network (LAN) connection, a personal area network (PAN) connection, a wireless universal serial bus (USB) connection, and/or a wireless ultra-wideband (UWB) connection. The received data may be compressed prior to the communicating. The received data may be compressed utilizing sub-band coding (SBC). The compressed received data may be transmitted via the established non-Bluetooth® connection.

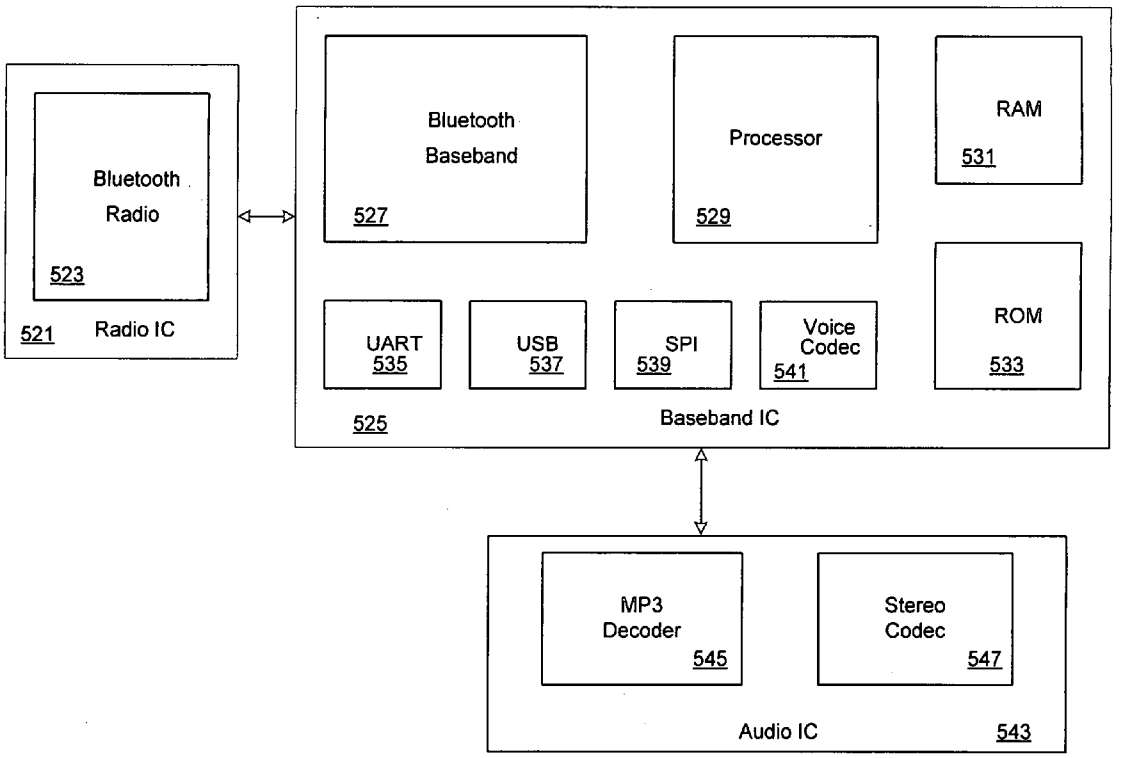

MICROSOFT CORP.
EXHIBIT 1012

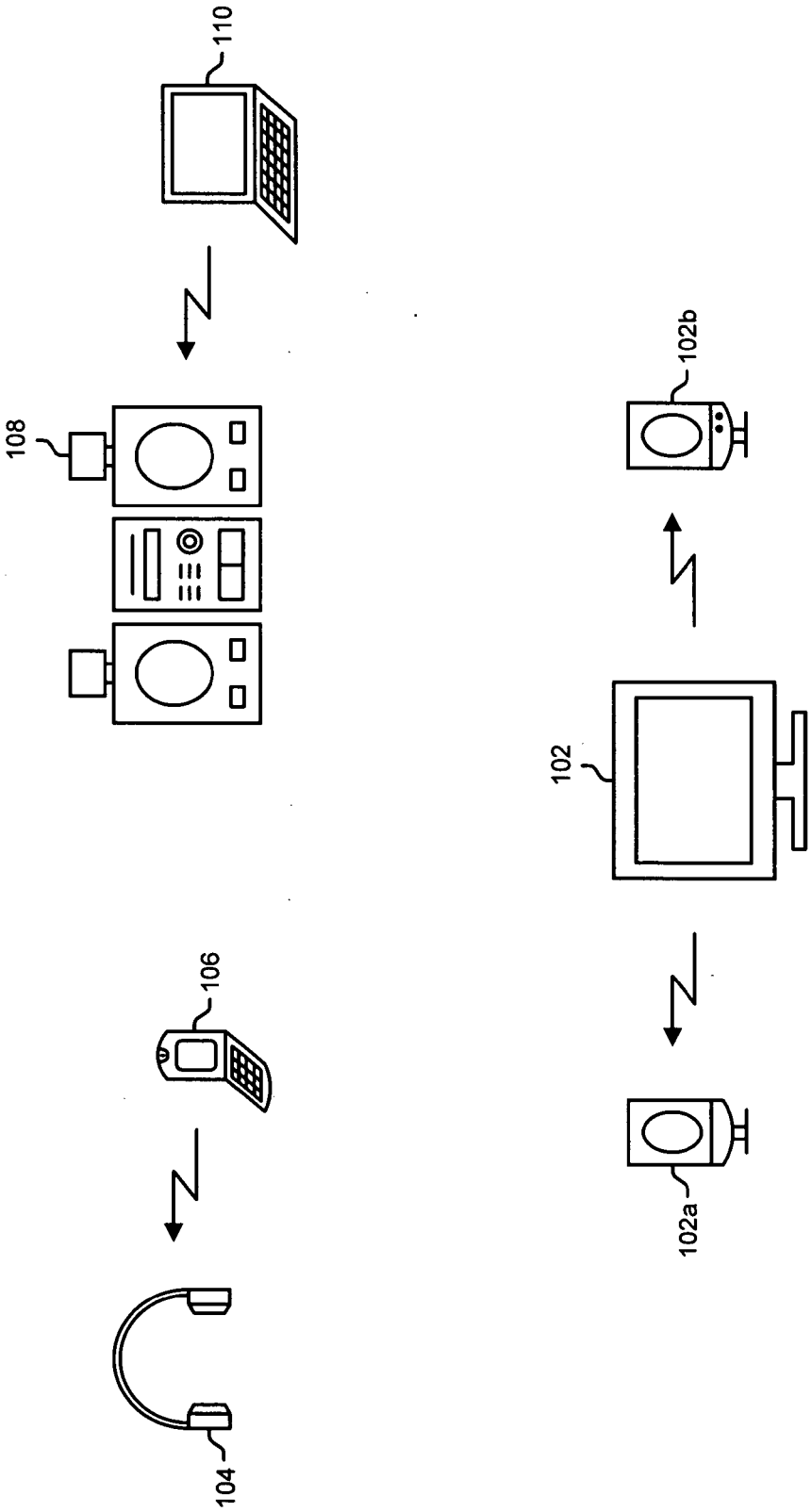

FIG. 1

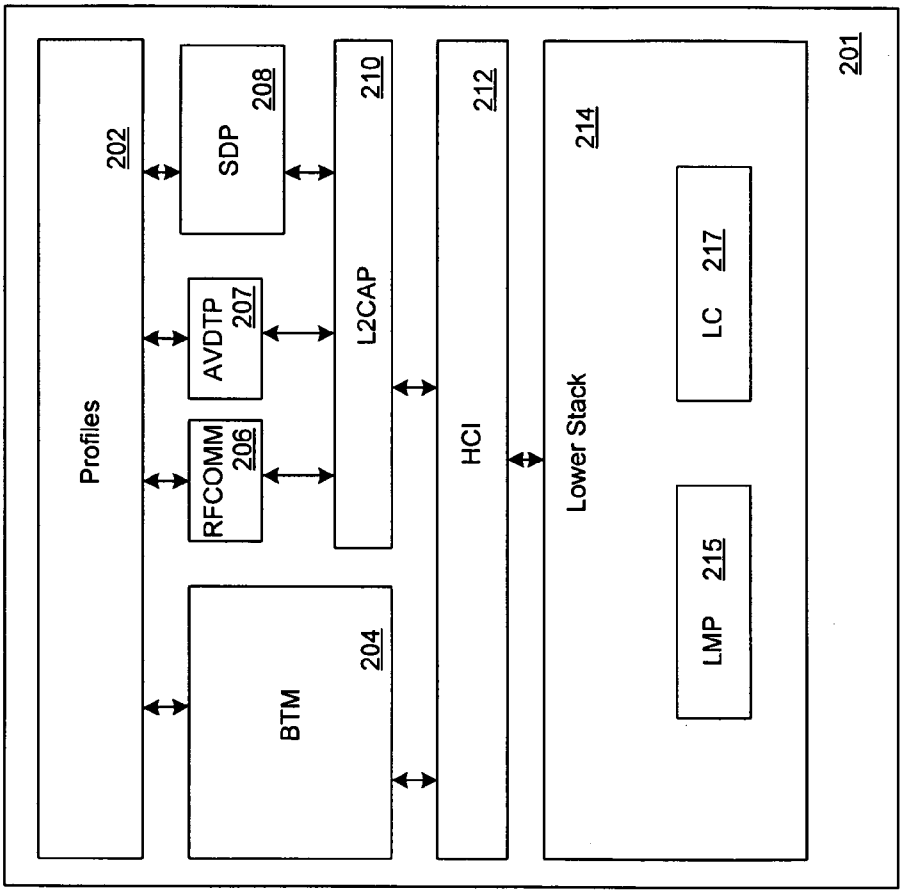
Profiles
202
RFCOMM
206
AVDTP
207
SDP
208
BTM
204
L2CAP
210
HCI
212
Lower Stack
214
LMP
215
LC
217
201

FIG. 2

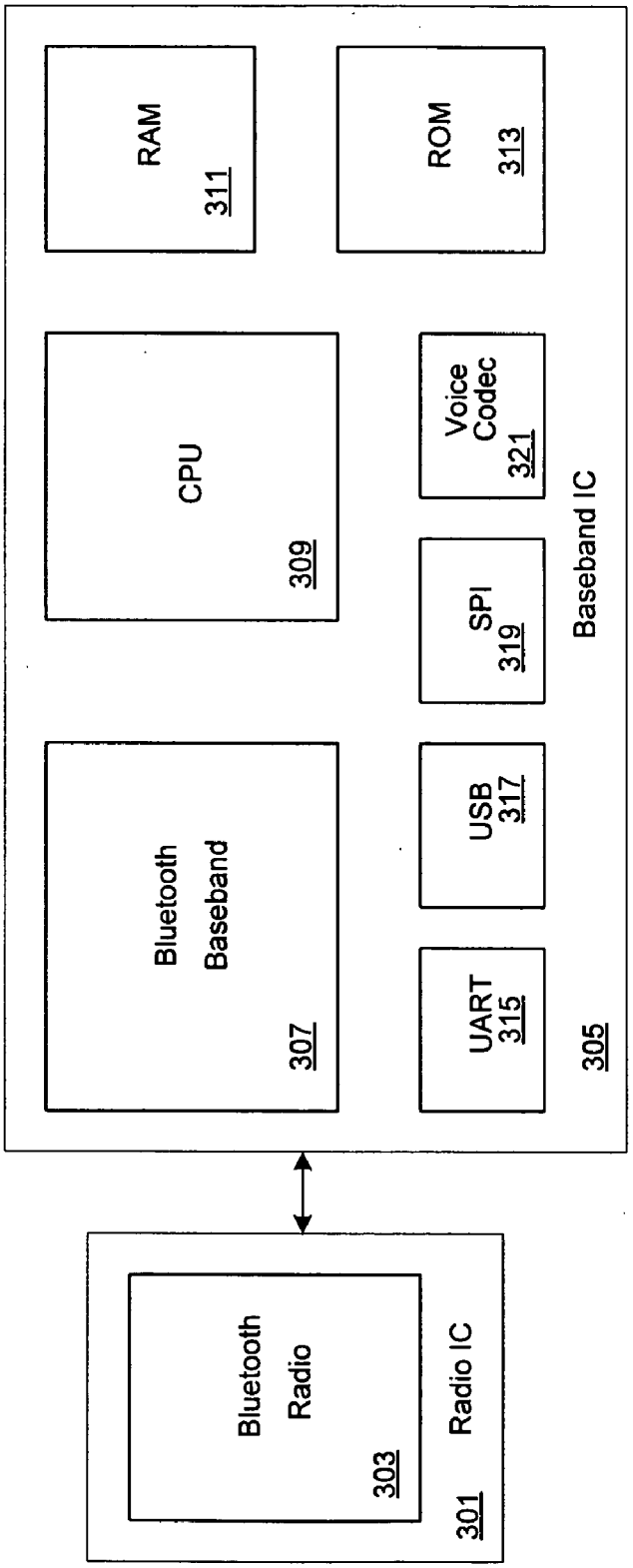
RAM
311
ROM
313
CPU
309
Voice Codec
321
SPI
319
Baseband IC
Bluetooth Baseband
307
USB
317
UART
315
305
Bluetooth Radio
303
Radio IC
301

FIG. 3

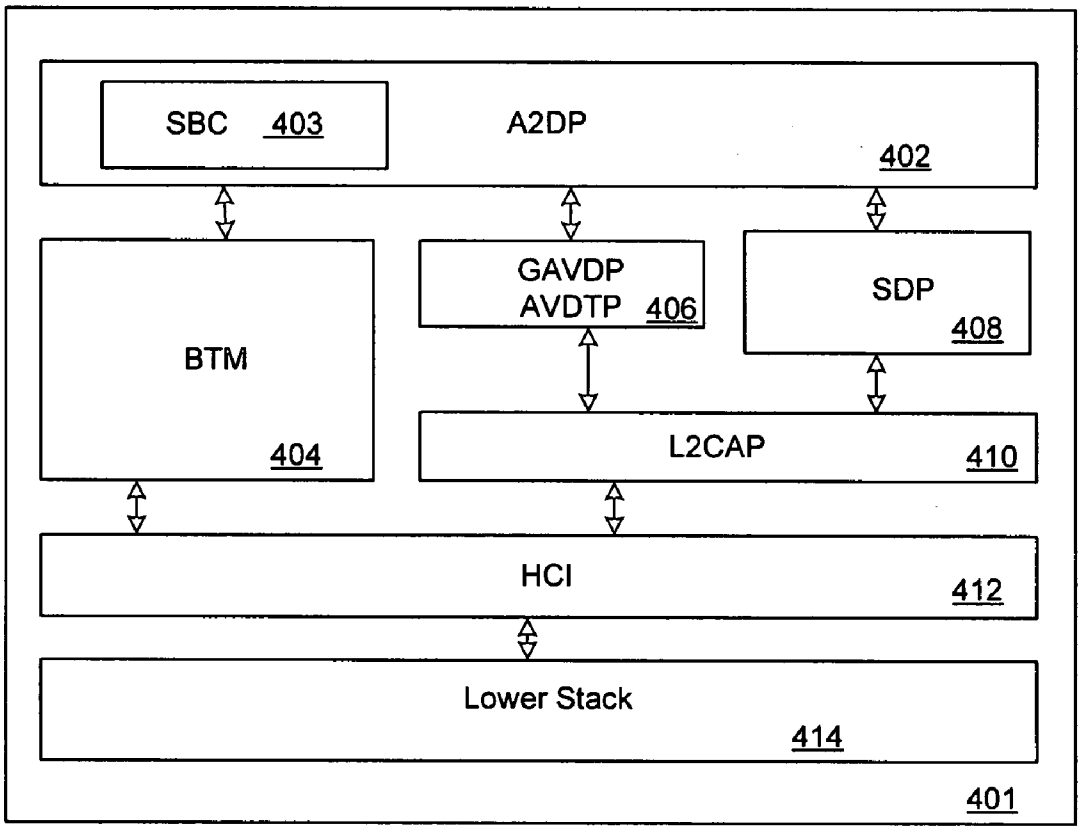
SBC 403
A2DP
402
BTM
404
GAVDP
AVDTP 406
SDP
408
L2CAP
410
HCI
412
Lower Stack
414
401

FIG. 4

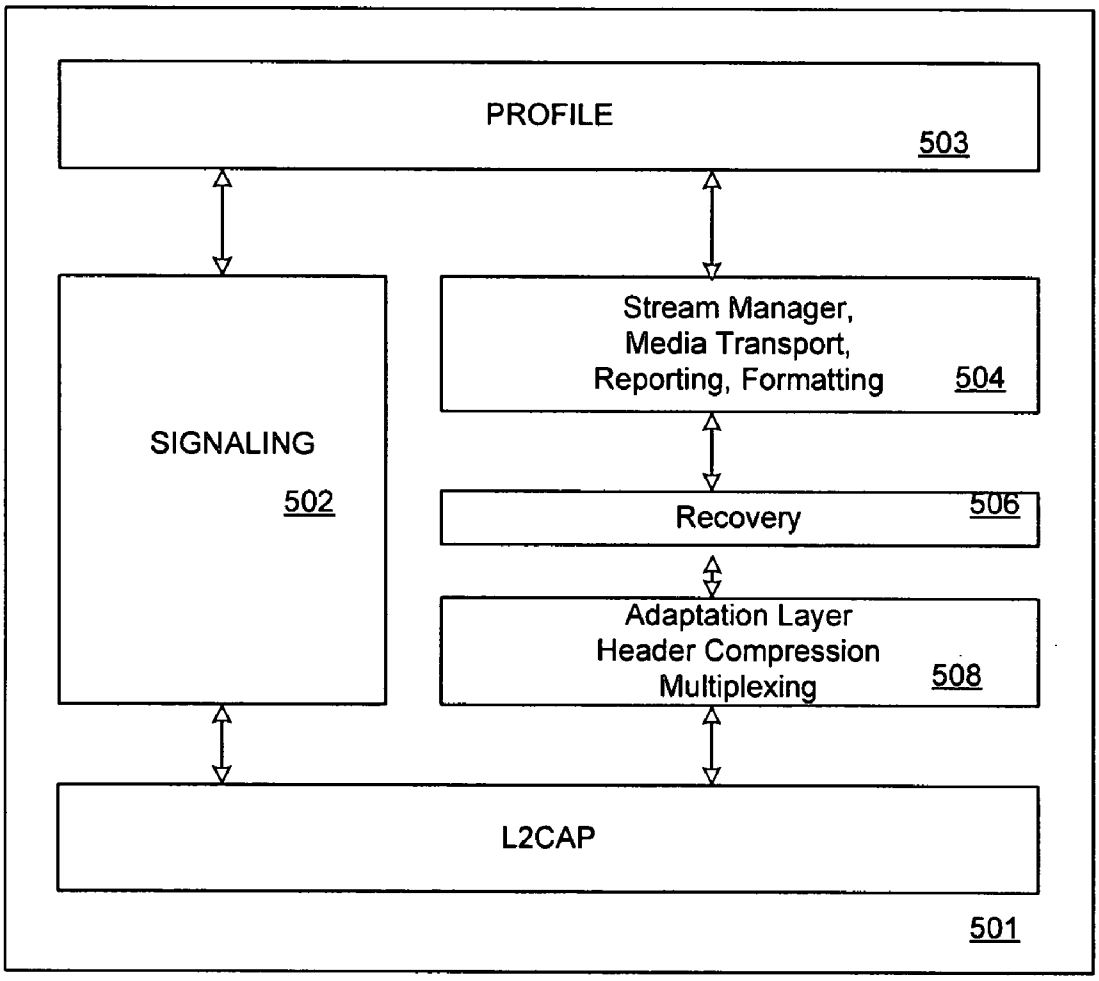
PROFILE
503
SIGNALING
502
Stream Manager,
Media Transport,
Reporting, Formatting
504
Recovery
506
Adaptation Layer
Header Compression
Multiplexing
508
L2CAP
501

FIG. 5A

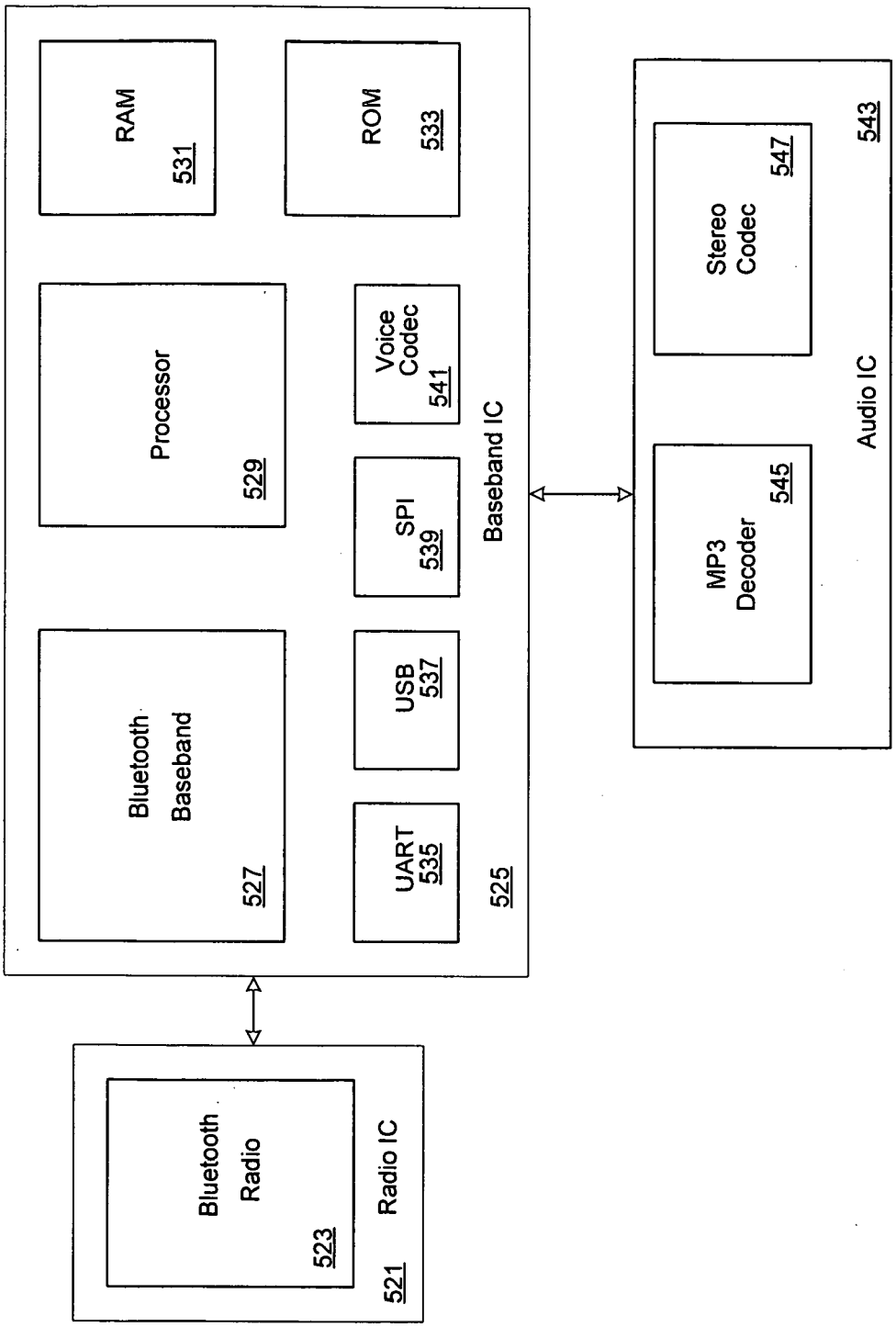
RAM
531
ROM
533
Processor
529
Voice Codec
541
SPI
539
Baseband IC
Bluetooth Baseband
527
USB
537
UART
535
525
Stereo Codec
547
543
Audio IC
MP3 Decoder
545
Bluetooth Radio
523
Radio IC
521

FIG. 5B

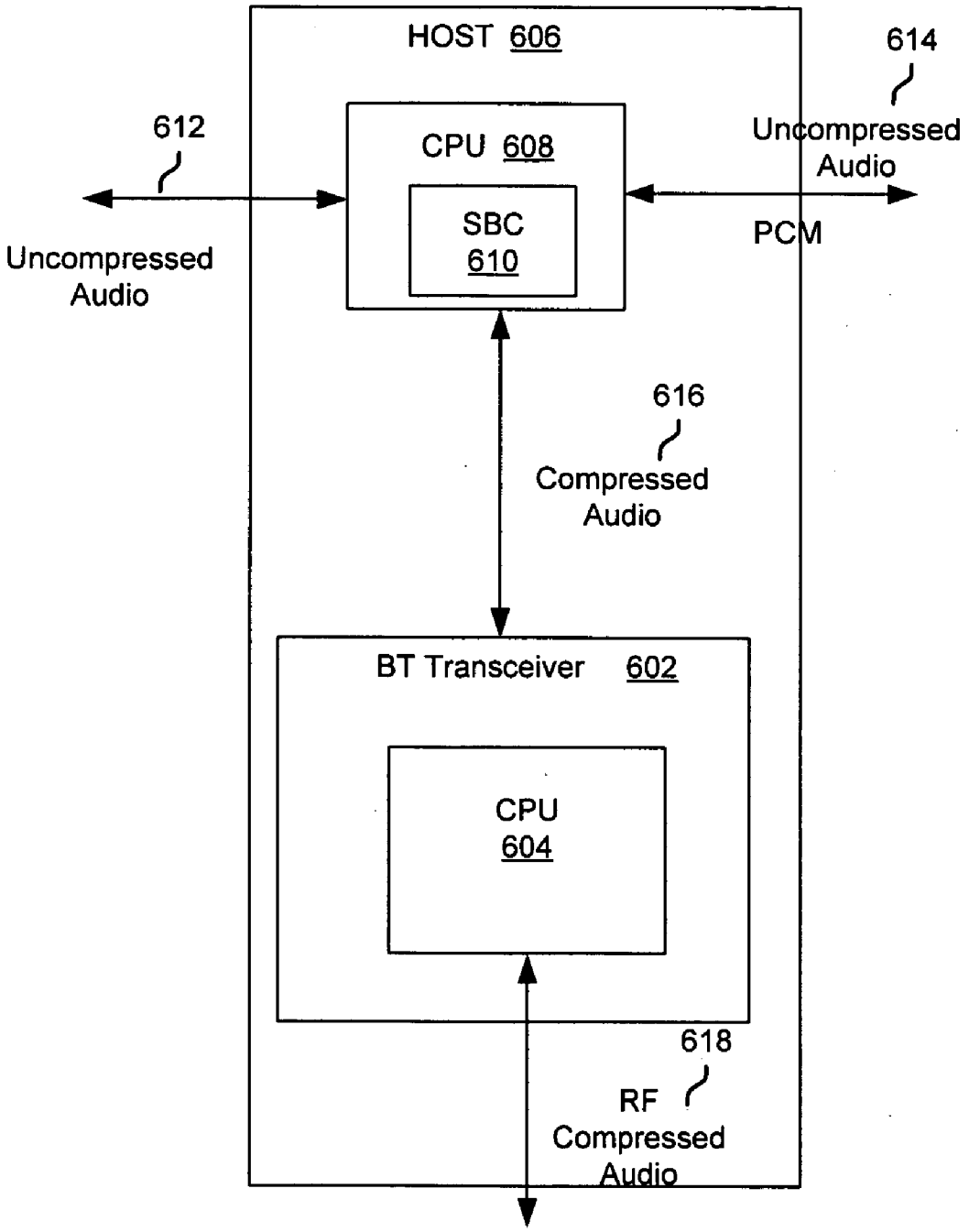
HOST 606
614
612
CPU 608
Uncompressed
Audio
SBC
610
PCM
Uncompressed
Audio
616
Compressed
Audio
BT Transceiver 602
CPU
604
618
RF
Compressed
Audio

FIG. 6

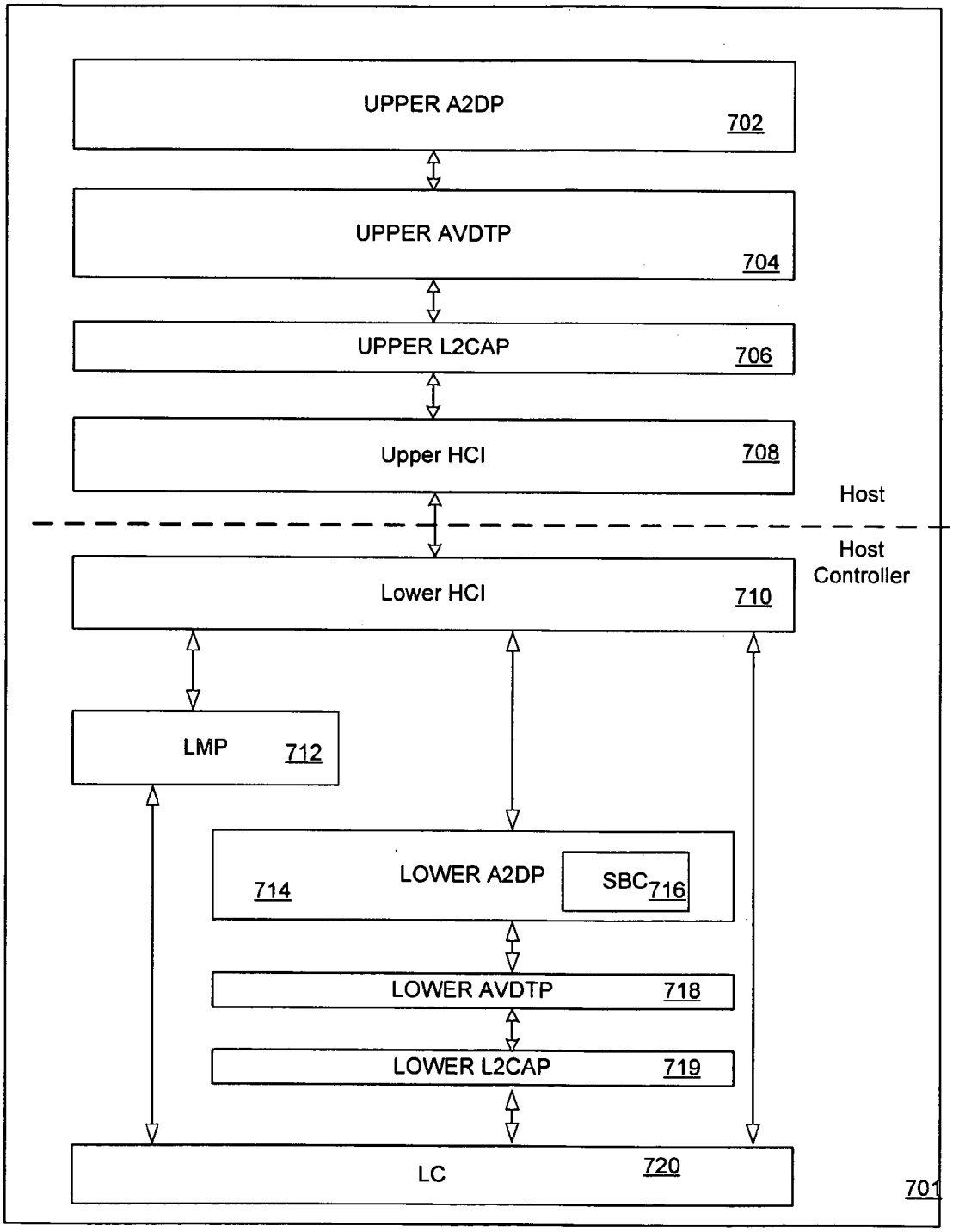
UPPER A2DP
702
UPPER AVDTP
704
UPPER L2CAP
706
Upper HCI
708
Host
Host Controller
Lower HCI
710
LMP
712
714
LOWER A2DP
SBC
716
LOWER AVDTP
718
LOWER L2CAP
719
LC
720
701

FIG. 7

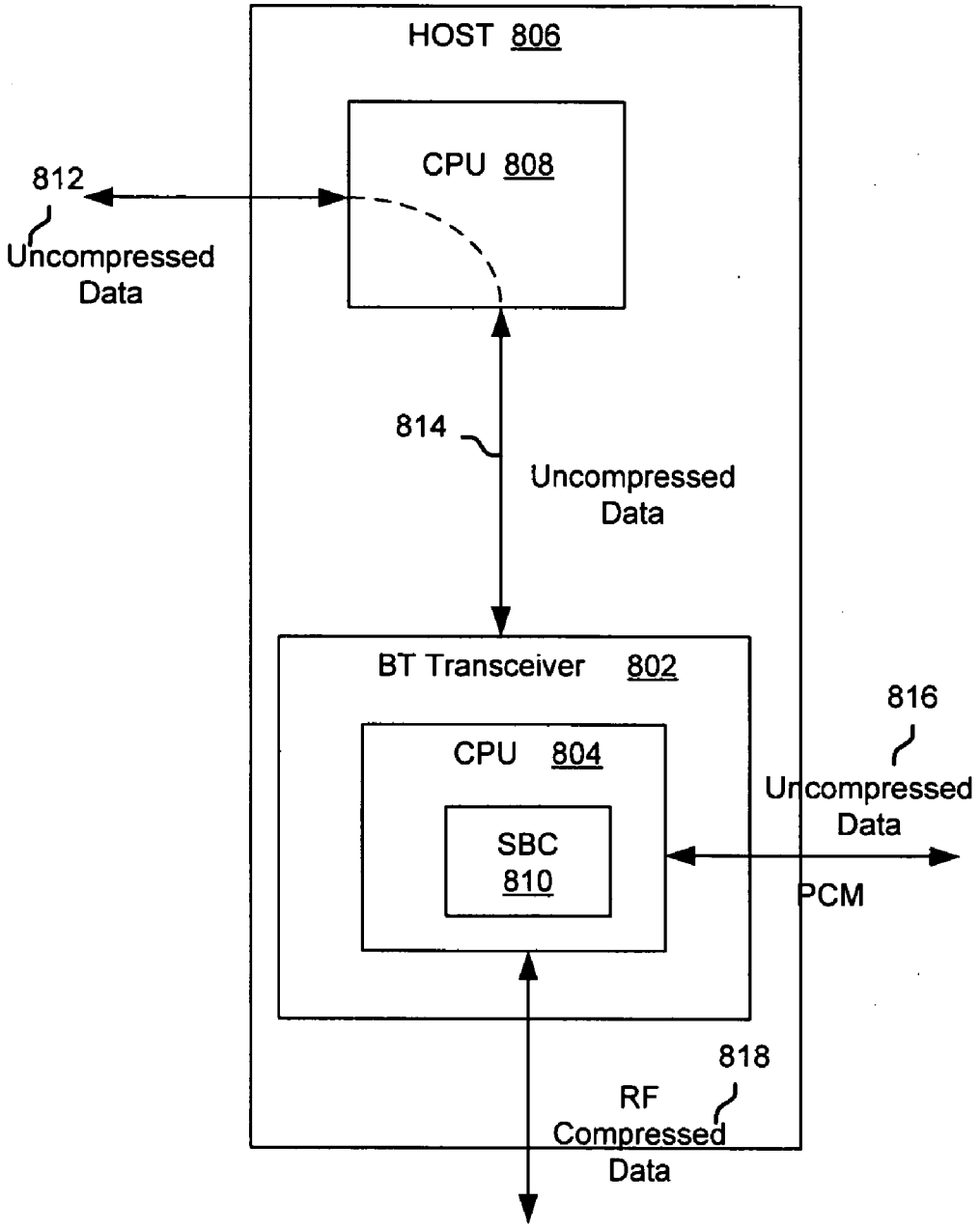
HOST 806
CPU 808
812
Uncompressed Data
814
Uncompressed Data
BT Transceiver 802
CPU 804
SBC 810
816
Uncompressed Data
PCM
818
RF Compressed Data

FIG. 8

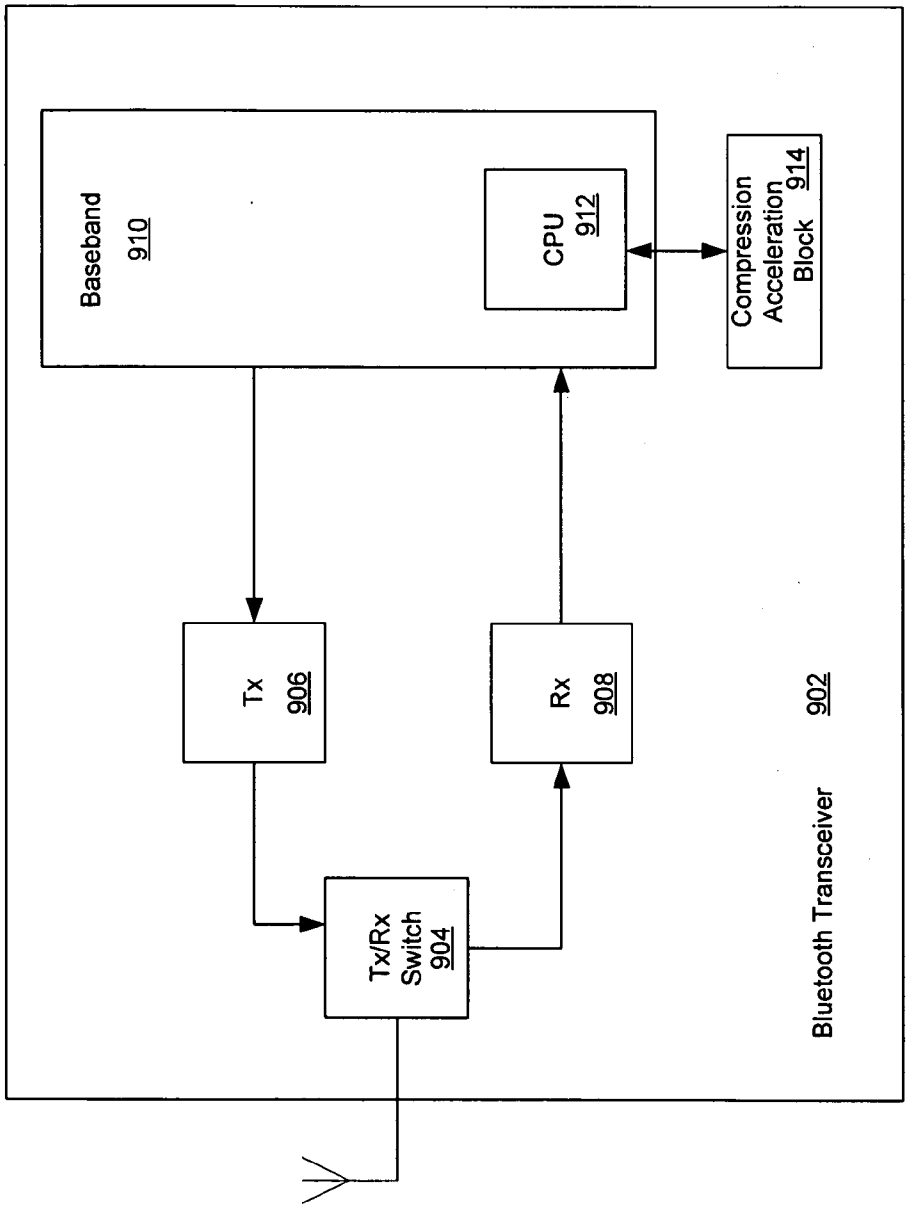
Baseband
910
CPU
912
Compression
Acceleration
Block
914
Tx
906
Rx
908
Tx/Rx
Switch
904
Bluetooth Transceiver
902

FIG. 9

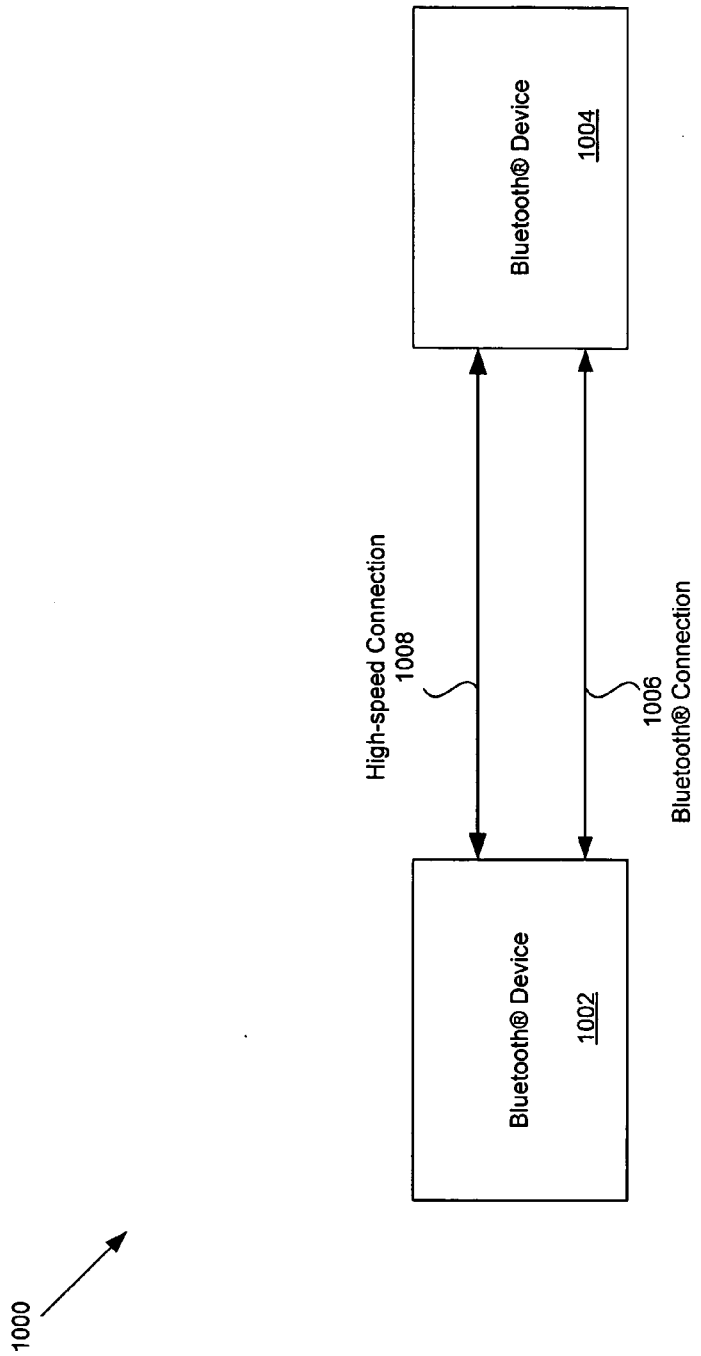
1000
Bluetooth® Device
1002
High-speed Connection
1008
1006
Bluetooth® Connection
Bluetooth® Device
1004

FIG. 10

METHOD AND SYSTEM FOR BLUETOOTH[00ab] COMMON SIGNALING FOR NON-BLUETOOTH[00ab] DATA CHANNELS

CROSS-REFERENCE TO RELATED APPLICATIONS/INCORPORATION BY REFERENCE

[0001] This application makes reference to and claims priority to U.S. Provisional Application Ser. No. 60/750,434, filed on Dec. 14, 2005, which is incorporated herein by reference in its entirety.

FIELD OF THE INVENTION

[0002] Certain embodiments of the invention relate to Bluetooth enabled devices. More specifically, certain embodiments of the invention relate to a method and system for Bluetooth® common signaling for non-Bluetooth® data channels.

BACKGROUND OF THE INVENTION

[0003] Bluetooth® wireless technology is set to revolutionize personal connectivity by providing freedom from wired connections. Bluetooth® is a specification for a small form-factor, low-cost radio solution providing links between mobile computers, mobile phones and other portable and handheld devices.

[0004] Bluetooth® wireless technology is an international, open standard for allowing intelligent devices to communicate with each other through wireless, short-range communications. This technology allows any sort of Bluetooth® compliant device—from computers and cell phones to keyboards and headphones—to make its own connections, without wires, cables or any direct action from a user. Bluetooth® is currently incorporated into numerous commercial products including laptops, PDAs, cell phones, and printers, with more products coming out every day.

[0005] Bluetooth devices, such as mobile phones and PDAs, are evolving to become more complex as such devices may be adapted to transmit and receive audio information. For example, a Bluetooth® device may utilize a coder/decoder (CODEC) to encode audio information prior to communicating the encoded information to another Bluetooth® device, for example. Similarly, the CODEC may be utilized to decode encoded audio information received from another Bluetooth® device.

[0006] In conventional Bluetooth® enabled handheld devices having an integrated Bluetooth® chip, the low-complexity sub-band CODEC (SBC) encoder runs on the handheld's main processor. As a result, the Bluetooth® encoding process utilizes valuable main processor resources, which may otherwise be utilized for handling other tasks being run on the handheld device. In these conventional handheld devices, such as cellular telephones, the handheld device must have sufficient additional processing power to handle tasks associated with encoding SBC audio. As a result of this requirement, cheaper handheld devices that lack adequate processing power are eliminated from ever handling SBC audio encoding. The same is true for other CODECs other than SBC that may be utilized for Bluetooth®.

[0007] Furthermore, communicating data, such as audio and video data between Bluetooth®-enabled devices via a Bluetooth® connection may be achieved at data rates that are slower than data rates offered by high-speed connections.

[0008] Further limitations and disadvantages of conventional and traditional approaches will become apparent to one of skill in the art, through comparison of such systems with some aspects of the present invention as set forth in the remainder of the present application with reference to the drawings.

BRIEF SUMMARY OF THE INVENTION

[0009] A system and/or method is provided for Bluetooth® common signaling for non-Bluetooth® data channels, substantially as shown in and/or described in connection with at least one of the figures, as set forth more completely in the claims.

[0010] These and other advantages, aspects and novel features of the present invention, as well as details of an illustrated embodiment thereof, will be more fully understood from the following description and drawings.

BRIEF DESCRIPTION OF SEVERAL VIEWS OF THE DRAWINGS

[0011] FIG. **1** is a diagram illustrating some examples of Bluetooth® (BT) streaming audio devices.

[0012] FIG. **2** is a simplified exemplary protocol stack.

[0013] FIG. **3** is a block diagram illustrating an exemplary Bluetooth® hardware implementation.

[0014] FIG. **4** is a block diagram illustrating a Bluetooth® protocol stack for streaming audio.

[0015] FIG. **5**A is a block diagram illustrating AVDTP features.

[0016] FIG. **5**B is a block diagram illustrating an exemplary hardware implementation for streaming audio playback, in accordance with an embodiment of the invention.

[0017] FIG. **6** is a block diagram illustrating audio signal processing within a Bluetooth® enabled host device, in accordance with an embodiment of the invention.

[0018] FIG. **7** is a block diagram of exemplary Bluetooth® protocol stack, in accordance with an embodiment of the invention.

[0019] FIG. **8** is a block diagram illustrating signal compression within a Bluetooth® transceiver, in accordance with an embodiment of the invention.

[0020] FIG. **9** is a block diagram of exemplary Bluetooth® transceiver utilizing audio signal compression, in accordance with an embodiment of the invention.

[0021] FIG. **10** is a block diagram illustrating a Bluetooth® communication system, in accordance with an embodiment of the invention.

DETAILED DESCRIPTION OF THE INVENTION

[0022] Certain embodiments of the invention may be found in a method and system for Bluetooth® common signaling for non-Bluetooth® data channels. Bluetooth is a short-range wireless technology intended for use in Personal Area Networks. Among its strengths are a ubiquitous pres-

ence, a sophisticated device discovery mechanism, and many well-specified application usage models called Bluetooth profiles. However, Bluetooth® devices may utilize a data rate that is relatively low compared to LAN technologies, such as 802.11, or the variety of new personal area network (PAN) technologies that have been developed, or are being developed to operate in the ultra-wideband (UWB) bandwidth allocation. In this regard, Bluetooth® protocol stack may be used to discover, establish, maintain, or close data connections of non-Bluetooth® technologies such as LAN and PAN protocols including 802.11 and variants, wireless USB, and technologies that operate in the UWB bands. By using Bluetooth as a common signaling for one or more non-Bluetooth physical wireless links, higher data rates may be achieved for existing Bluetooth® profiles and/or new functionality may be provided to define the new profiles. Furthermore, technology diversity may be achieved by selecting a physical layer in the context of the environment or the application. In this regard, Bluetooth® may be used to establish a connection between two or more Bluetooth®-enabled devices and a high-speed data link between the Bluetooth®-enabled devices may be used for communicating data, such as voice data and/or multimedia data, for example.

[**0023**] FIG. **1** is a diagram illustrating some examples of Bluetooth® (BT) streaming audio devices. Referring to FIG. **1**, there is shown a stereo headset **104**, a mobile phone **106**, a Bluetooth-enabled stereo system **108**, personal computers (PC) **110** and **102**, and stereo speakers **102***a* and **102***b*. The stereo headset **104** may receive streaming audio from MP3 files stored on the mobile phone **106**. The headset **104** may also function as a normal Bluetooth® telephony headset for phone calls. The Bluetooth®-enabled stereo system **108** may receive streaming audio from MP3 files stored on the PC **110**, solving the problem of how to get the MP3's from the PC **110** to the stereo system **108**. The PC **102** may play stereo audio to the pair of Bluetooth® wireless speakers **102***a* and **102***b*, thus freeing the desktop from wired clutter.

[**0024**] The Bluetooth® protocol utilizes a frequency hopping spread spectrum (FHSS) radio system operating in the 2.4 GHz unlicensed band. Its low power transmissions allow a typical range of about 10 meters. Devices may connect to each other to form a network known as a piconet, with up to seven active devices in the piconet. The maximum data throughput between devices may be between 2.0 and 3.0 megabits per second (Mbps), with the data capacity shared between devices on the piconet.

[**0025**] The Bluetooth® protocol utilizes a protocol stack to transfer data and to implement various advanced features that may be required by various applications. The Bluetooth® protocol stack may comprise a plurality of different protocols designed for different purposes. Various profiles, or applications, may reside above the protocol stack, and utilize the services that are offered by the Bluetooth® protocol stack. The Bluetooth® protocol may also comprise a lower protocol stack for link management and baseband control.

[**0026**] One or more of the protocols within the Bluetooth® protocol stack, may reside within a host device, such as a Bluetooth® enabled device. Other protocols within the Bluetooth® protocol stack, such as protocols within the lower Bluetooth® protocol stack, may reside within the Bluetooth® chip. In this regard, SBC encoding, or compression of audio data may be transferred from the upper Bluetooth® protocol stack to the lower Bluetooth® protocol stack residing on the Bluetooth® chip. Consequently, processing resources handled by a host processor within the Bluetooth® enabled device may be freed and allocated for other purposes.

[**0027**] FIG. **2** is a simplified exemplary protocol stack. Referring to FIG. **2**, there is illustrated an exemplary Bluetooth® protocol stack **201**. The exemplary Bluetooth® protocol stack **201** may comprise profiles layer **202**, Bluetooth® management entity (BTM) layer **204**, radio frequency communication (RFCOMM) protocol **206**, audio/video distribution transport protocol (AVDTP) **207**, service discovery protocol (SDP) **208**, logical link control and adaptation protocol (L2CAP) **210**, host controller interface (HCI) **212**, and a lower stack **214**. The profiles layer **202** may comprise profiles of one or more applications that may be utilized in connection with the Bluetooth® protocol stack. The BTM layer **204** makes it possible for various equipment to have wireless communication by integrating with a Bluetooth® module. The RFCOMM protocol **206** may be utilized to provide emulation of RS-232 serial ports over the L2CAP protocol, providing both transport capabilities for upper level services, such as OBEX, that use serial line as the transport mechanism.

[**0028**] The SDP **208** may be utilized for querying Bluetooth® device information, Bluetooth® device services, and characteristics of the services. The L2CAP **210** may be utilized to support higher level protocol multiplexing, packet segmentation and reassembly, and quality of service (QoS). L2CAP **210** may permit higher-level protocols and applications to transmit and receive data packets up to 64 kilobytes in length. The HCI **212** may be adapted to provide a command interface to the baseband controller, link manager, and access to hardware status and control registers.

[**0029**] In one embodiment of the invention, the L2CAP **210** may be utilized to discover another Bluetooth®-enabled device and configure a high-speed connection between the two Bluetooth® devices. For example, L2CAP **210** may be used to configure a high-speed data communication session between the two Bluetooth® devices, utilizing a high-speed data connection. The high-speed data connection between the two Bluetooth®-enabled devices may comprise an 802.11 connection or an ultra-wideband (UWB) connection.

[**0030**] The Audio/Video Distribution Transport Protocol (AVDTP) **207** is the protocol designed especially for Bluetooth® streaming audio and video. It may perform the signaling that may be utilized to configure, open, and/or close a stream between two Bluetooth® devices. An Audio stream data may be transferred utilizing real-time protocol (RTP) packets. AVDTP resides in the protocol stack above L2CAP and may utilize separate L2CAP channels for signaling and data.

[**0031**] The lower stack **214** may comprise a link manager protocol (LMP) **215** and a link controller (LC) **217**. The link manager (LM) **215** may be adapted to carry out link setup, authentication, link configuration and other protocols. The link manager **215** may also discover other remote LM's and communicates with them via the LMP. To perform its service provider role, the LM **215** may utilize the underlying Link Controller (LC) **217**. The LMP essentially comprises a

number of protocol data units (PDUs), which may be sent from one device to another, determined by an address in the packet header, for example. The LMP **215** may control the communication between various Bluetooth® enabled devices, such as a phone and a PC.

[**0032**] The LC **217** within the lower stack **214** may be adapted to handle Bluetooth® baseband functions, such as encoding of voice and/or data packets, error correction, slot delimitation, frequency hopping, radio interface, data encryption, and/or link authentication. In addition, the LC **217** may be adapted to execute link management software associated with the LMP **215**. The link manager's control may include setting up the communication link and performing authentication, configuration, and other protocols, for example. In an exemplary embodiment of the invention, the lower stack **214** may comprise an advanced audio distribution profile (A2DP) utilizing SBC encoding or compression. In this regard, the A2DP implemented within the lower stack **214** may be adapted to handle audio data formatting, such as compression or encoding.

[**0033**] Bluetooth® hardware implementations are typically highly integrated systems consisting of one or two chips. FIG. **3** is a block diagram illustrating an exemplary Bluetooth® hardware implementation. Referring to FIG. **3**, the Bluetooth® hardware implementation may comprise a Bluetooth® baseband integrated circuit (IC) **305** and a radio IC **301**. The radio IC **301** may comprise a Bluetooth® radio circuit **303**. The baseband IC **305** may comprise Bluetooth® baseband circuit **307**, processor **309**, random access memory (RAM) **311**, read only memory (ROM) **313**, voice CODEC **321**, a serial peripheral interface (SPI) **319**, universal serial bus (USB) **317**, and universal asynchronous receiver/transmitter (UART) **315**. The radio IC **301** may be implemented in a separate chip. The processor **309** may be adapted to operate all the required software including lower stack, upper stack, and embedded profile, for example. This type of single CPU implementation allows for a small, low power, and low cost solution.

[**0034**] The 723 kbps throughput of a Bluetooth® link may be suitable for streaming audio utilizing MP3 and/or other codec formats. Bluetooth® streaming audio may be defined by three Bluetooth® specifications covering the protocol and profiles comprising AVDTP, GAVDP, and A2DP. The Audio/Video Distribution Transport Protocol (AVDTP) is the protocol designed especially for Bluetooth® streaming audio and video. It may perform the signaling that may be utilized to configure, open, and/or close a stream between two Bluetooth® devices. An Audio stream data may be transferred utilizing real-time protocol (RTP) packets. AVDTP resides in the protocol stack above L2CAP and may utilize separate L2CAP channels for signaling and data.

[**0035**] The Generic Audio/Video Distribution Profile (GAVDP) is an abstract profile that defines how applications can use AVDTP. The Advanced Audio Distribution Profile (A2DP) defines how Bluetooth® streaming audio applications may operate. For example, A2DP defines how to get and set audio CODEC parameters for MPEG and/or other codecs. The A2DP may also define the media payload formats for packaging audio stream data into packets and may contain the specification for the low-complexity sub-band CODEC (SBC). In this regard, the SBC may be implemented on-chip within the Bluetooth® baseband IC **305** and may be used for audio data compression of uncompressed data received from the radio IC **301**. For example, the SBC may be implemented within the processor **309** or may be implemented outside the processor **309**, as a separate compression acceleration block.

[**0036**] FIG. **4** is a block diagram illustrating a Bluetooth® protocol stack for streaming audio. Referring to FIG. **4**, the Bluetooth® protocol stack for streaming audio **401** may comprise A2DP **402**, Bluetooth® management entity (BTM) protocol **404**, GAVDP/AVDTP **406**, service discovery protocol (SDP) **408**, logical link control and adaptation protocol (L2CAP) **410**, host controller interface (HCI) **412**, and a lower stack **414**. In addition to the Bluetooth® specifications illustrated on FIG. **4**, there are several ISO/IEC and Internet RFC specifications used for Bluetooth® streaming audio, which are summarized in Table 1.

TABLE 1

Additional specifications used for Bluetooth ® streaming audio

Specification	Description
ISO/IEC 11172 part 3	MPEG audio
ISO/IEC 13818 part 3	MPEG audio
ISO/IEC 13818 part 7	MPEG advanced audio
ISO/IEC 14496 part 3	MPEG advanced audio
RFC 1889	Real-time protocol (RTP)
RFC 2733	RTP error correction
RFC 3095	Packet header compression
RFC 2250	RTP payload format
RFC 3016	RTP payload format
RFC 3119	RTP payload format

[**0037**] The A2DP **402** may comprise a low-complexity sub-band CODEC (SBC) **403**. The SBC **403** may be utilized for audio data compression, or encoding of uncompressed data received from a Bluetooth® radio, for example.

[**0038**] The bulk of the Bluetooth® streaming A/V system may be implemented in the AVDTP protocol. FIG. **5**A is a block diagram illustrating AVDTP features. Referring to FIG. **5**A, the AVDTP may comprise a portion of the Bluetooth® protocol stack **501** located below a Bluetooth® protocol profile **503**, such as an A2DP, and may be divided into four subsystems: signaling **502**, stream management **504**, recovery **506**, and adaptation layer **508**. AVDTP signaling messages **502** are used to discover, configure, open, and close a stream between two Bluetooth® enabled devices. There are eleven message types with some messages being optional.

[**0039**] A media transport feature of the stream manager **504** may be utilized to transfer RTP packets containing audio data. This feature is a required feature of AVDTP. The reporting feature of the stream manager **504** may allow link quality information, such as jitter and packet loss, to be exchanged utilizing the protocols defined in RFC 1889. This is an optional feature. The recovery feature **506** adds extra packets containing error correction data to the packet transfer. This feature may allow for lost packets to be recovered. The recovery mechanism is defined by RFC 2733. This is an optional feature and may require additional ROM and/or RAM.

[**0040**] A header compression feature of the adaptation layer **508** allows the RTP header to be compressed, as

defined by RFC 3095. When used with AVDTP, the RTP header may be reduced by 5 to 7 bytes. This savings may probably not be worth the effort of implementing the feature especially when large media packets are used. A multiplexing feature of the AVDTP adaptation layer **508** allows L2CAP channels to be shared by media, reporting, and/or recovery packets, therefore resulting in fewer L2CAP channels and better baseband channel capacity utilization. This complex feature may be useful for devices that use multiple simultaneous streams with reporting and recovery.

[**0041**] In an exemplary embodiment of the invention, the AVDTP may also utilize data formatting functionalities. For example, the AVDTP may utilize an audio data formatting functionality within the stream manager **504**. The formatting functionality may be used in accordance with on-chip compression of audio data via an SBC, for example. In this regard, the stream manager **504** may establish data formatting parameters, such as compression parameters for compressing audio data, and an SBC implemented within a Bluetooth® baseband IC may be used for audio data compression. Compressed audio data may then be communicated to a peer Bluetooth® enabled device.

[**0042**] FIG. **5**B is a block diagram illustrating an exemplary hardware implementation for streaming audio playback, in accordance with an embodiment of the invention. Referring to FIG. **5**B, the Bluetooth® hardware implementation for streaming audio playback may comprise a Bluetooth® baseband integrated circuit (IC) **525**, a radio IC **521**, and an audio IC **543**. The radio IC **521** may comprise a Bluetooth® radio circuit **523**. The audio IC **543** may comprise an MP3 decoder **545** and a stereo codec circuit **547**. The baseband IC **525** may comprise Bluetooth® baseband circuit **527**, the processor **529**, random access memory (RAM) **531**, read only memory (ROM) **533**, voice codec **541**, a serial peripheral interface (SPI) **539**, universal serial bus (USB) **537**, and universal asynchronous receiver/transmitter (UART) **535**. The radio IC **521** and the audio IC **543** may be implemented in separate chips. The processor **529** may be adapted to operate all the required software including lower stack, upper stack, and embedded profile, for example. Data received over the Bluetooth® link may be processed by the protocol stack and passed to an application. The application may acquire the audio stream data and may communicate it over a hardware interface to the audio IC **543**. The audio IC **543** may decode the digital audio and may convert the audio signal to analog signal.

[**0043**] Implementing AVDTP with the minimum required features may require multiple streams support. For the simple streaming audio device examples shown in FIG. **1**, optional features such as recovery, reporting, header compression, and multiplexing may not be required as Bluetooth® devices may be adapted to perform adequately without such features.

[**0044**] Maintaining a data transfer with a constant bit rate on a Bluetooth® link may be difficult to achieve. If data is sent too slowly, the audio decoder may run out of stream data to process, causing an audible error. Lost data packets may also cause the same problem. On the other hand, if data is sent too quickly, then data may be buffered up at the audio decoder, eventually causing congestion or data loss when the device runs out of buffer space. Since there is no flow control mechanism built into AVDTP or L2CAP, other mechanisms may be utilized to prevent data loss. The mechanism used by the audio source, or device sending the stream, may depend on the type of source. If the source is "live" and audio stream data is provided by an audio encoder, then the encoder itself may provide the constant bit rate. If the source is from a file, then a timer may be utilized to maintain a constant bit rate.

[**0045**] To understand the idea behind using a timer, consider this example. A device is sending an MP3 stream from a file encoded at 128 kbps and 48 kHz sample frequency. Referring to Table 2a, this means an MP3 audio frame 384 bytes long is sent every 24.0 ms. If the device simply sets a periodic timer for 24.0 ms and sends a packet when the timer expires, the constant bit rate will be maintained.

TABLE 2a

Audio frame sizes for SBC and MP3.
Audio Frame Size vs. Data Rate and Sample Frequency

	SBC*			MP3		
	64 kbps	128 kbps	320 kbps	64 kbps	128 kbps	320 kbps
48 kHz	20	42	108	192	384	960
44.1 kHz	22	46	118	209	418	1045
32 kHz	32	64	162	228	576	1440

[**0046**]

TABLE 2b

Audio frame periods for SBC and MP3.
Audio Frame Period vs. Sample Frequency

	SBC*	MP3
48 kHz	2.667 ms	24.0 ms
44.1 kHz	2.902 ms	26.122 ms
32 kHz	4.0 ms	36.0 ms

[**0047**] SBC frames may be small with a short period, as illustrated in Table 2b with regard to several typical values for SBC and MP3 audio frame periods. Some devices may have problems using timers or processing data at such short intervals. This suggests that rather than send a small packet containing a single frame at very short intervals, a larger packet containing several frames at longer intervals may be communicated instead. The maximum size of MP3 frames may correspond to the L2CAP MTU of the AVDTP transport channel, such that audio frames may not need to be fragmented across AVDTP packets.

[**0048**] When more than one stream is transferred between devices, the stream playback may be synchronized. Consider the example of the wireless PC speakers shown in FIG. **1**. The PC may communicate a Bluetooth® audio stream to each speaker. There are actually two synchronization problems in this example. First, the audio playback of the two speakers may need to be synchronized with each other. Second, the audio playback may need to be synchronized with the display on the PC. Although the Bluetooth® specifications do not cover synchronization issues, there are some features of the system that may be utilized to address these synchronization problems.

[**0049**] FIG. **6** is a block diagram illustrating audio signal processing within a Bluetooth® enabled host device, in

accordance with an embodiment of the invention. Referring to FIG. **6**, the Bluetooth® device or host **606** may comprise a central processing unit (CPU) **608** and a Bluetooth® transceiver **602**. The CPU or processor **608** may utilize, for example, a low-complexity sub-band CODEC (SBC) block **610**. The Bluetooth® transceiver **602** may comprise a CPU **604**. The CPU **608** may be adapted to process uncompressed audio data. For example, the CPU **608** may be adapted to encode or compress uncompressed audio data utilizing the SBC block **610**. The CPU **604** within the Bluetooth® transceiver **602** may be adapted to control processing of the required Bluetooth® software including the lower Bluetooth® protocol stack, the upper Bluetooth® protocol stack, and/or an embedded profile, for example.

[**0050**] In operation, uncompressed audio data **612** may be received by the Bluetooth® enabled device **606**. The Bluetooth® enabled device **606** may also be adapted to receive uncompressed input audio signals **614** from a standard pulse code modulation (PCM) wired CODEC interface, such as a standard hardware stereo PCM interface. Uncompressed audio data may be compressed by the CPU **608** utilizing the SBC block **610**. Resulting compressed audio data **616** may be communicated from the SBC block **610** to the Bluetooth® transceiver **602**. The resulting internally encoded audio data may be directly interfaced via the Bluetooth® protocol to externally enabled Bluetooth® devices. For example, a Bluetooth® radio such as Bluetooth® radio **523** within the Bluetooth® transceiver **602** may communicate the received compressed signal as compressed RF audio signal **618** to a peer Bluetooth® device, for example.

[**0051**] In an exemplary embodiment of the invention, processing resources of the host CPU **608** may be freed by moving SBC compression functionalities to the Bluetooth® transceiver **602**. In this regard, SBC functionalities may be moved from the upper Bluetooth® protocol stack, such as the upper Bluetooth® A2DP, to a lower Bluetooth® protocol stack, such as a lower Bluetooth® A2DP.

[**0052**] FIG. **7** is a block diagram of exemplary Bluetooth® protocol stack, in accordance with an embodiment of the invention. Referring to FIGS. **6** and **7**, the exemplary Bluetooth® protocol stack may comprise an upper Bluetooth® protocol stack and a lower Bluetooth® protocol stack. The upper Bluetooth® protocol stack may be implemented within the host **606** and may comprise an upper A2DP **702**, an upper AVDTP **704**, an upper L2CAP **706**, and an upper HCI **708**. The lower Bluetooth® protocol stack may be implemented within the Bluetooth® transceiver **602** and may comprise a lower HCI **710**, an LMP **712**, a lower A2DP, a lower AVDTP **718**, a lower L2CAL **719**, and an LC **720**. The lower A2DP may comprise an SBC **716**. The upper L2CAP **706**, the upper HCI **708**, the lower HCI **710**, the LMP **712**, and the LC **720** may perform the same functionalities as described above with regard to FIGS. **2**, **4**, and **5**A. The upper Bluetooth® protocol stack may be utilized to handle control signaling portion of the Bluetooth® protocol from the host, and the lower Bluetooth® protocol stack may be utilized to handle data processing/formatting portion of the Bluetooth® protocol from the host controller.

[**0053**] In an exemplary embodiment of the invention, the SBC block may be moved from the upper Bluetooth® protocol stack in the host **606** to the lower Bluetooth® protocol stack in the Bluetooth® transceiver **602**. In this regard a lower A2DP **714** with the SBC **716** may be included as a protocol layer below the lower HCI **710**. The lower A2DP **714** may be utilized to establish a signaling channel, for example, from the host device **606** to a peer Bluetooth® enabled device for communication of compressed audio data. The lower AVDTP **718** may be implemented as a Bluetooth® protocol layer below the lower A2DP **714** and may be utilized to provide fragmentation and assembly functionalities during processing of compressed audio data.

[**0054**] For example, compressed audio data may be further fragmented or combined together, based on the size of the compressed audio data packets. The lower AVDTP **718** may be utilized to compress a plurality of SBC packets into a single AVDTP packet and add a media payload header to the AVDTP packet. The lower L2CAP **719** may be utilized to support higher level protocol multiplexing, packet segmentation and reassembly, and quality of service (QoS) processing with regard to compressed audio frames processed by the lower A2DP **714** and the lower AVDTP **718** protocols. The lower L2CAP **719** may be adapted to verify the AVDTP packet (with a header) received from lower AVDTP **718**, and to add an L2CAP header. The L2CAP packet and header may then be communicated to the LC **720** for further baseband processing and transmission.

[**0055**] FIG. **8** is a block diagram illustrating signal compression within a Bluetooth® transceiver, in accordance with an embodiment of the invention. Referring to FIG. **8**, the Bluetooth® device or host **806** may comprise a central processing unit (CPU) **808** and a Bluetooth® transceiver **802**. The Bluetooth® transceiver **802** may comprise a CPU **804** and the CPU **804** may utilize a low-complexity sub-band CODEC (SBC) block **810**. The CPU **804** may be adapted to process uncompressed data received from the CPU **808**. For example, the CPU **804** may be adapted to encode or compress uncompressed data utilizing the SBC block **810**. Furthermore, the CPU **804** within the Bluetooth® transceiver **802** may be adapted to operate all the required Bluetooth® software including the lower Bluetooth® protocol stack, the upper Bluetooth® protocol stack, and/or an embedded profile, for example.

[**0056**] In operation, uncompressed data **812** may be received by the Bluetooth® enabled device **806**. The uncompressed data **812** may then be communicated to the Bluetooth® transceiver **802** via connection **814**. The uncompressed data may be compressed by the CPU **804** within the Bluetooth® transceiver **802** utilizing the SBC block **810**. The Bluetooth® transceiver **802** may be also adapted to receive uncompressed data **816** via a standard pulse code modulation (PCM) wired CODEC interface, such as a standard hardware stereo PCM interface. The resulting internally encoded data may be directly interfaced via the Bluetooth® protocol from the Bluetooth® transceiver **802** to externally enabled Bluetooth® devices. For example, a Bluetooth® radio, such as the Bluetooth® radio **523** of FIG. **5**B, which is located within the Bluetooth® transceiver **802**, may communicate the compressed data as RF compressed data **818** to a peer Bluetooth® device, for example.

[**0057**] Even though a PCM interface is utilized to receive uncompressed input data, the present invention may not be so limited and other types of interfaces, such as I2S or another hardware interface may be also utilized to receive uncompressed input data.

[0058] Referring to FIGS. **7** and **8**, the host device **806**, which may be a Bluetooth® enabled host device, may be aware that the Bluetooth® transceiver **802** may be adapted to perform encoding or compression of data, such as audio data. The Bluetooth® enabled host device may initially establish a connection to a peer Bluetooth® device utilizing standard Bluetooth® protocol and procedures. After a Bluetooth® connection is established between the Bluetooth® enabled host device **806** and a peer Bluetooth® device, the Bluetooth® enabled host device **806** may indicate to the Bluetooth® transceiver **802** that uncompressed data may be sent to the Bluetooth® transceiver **802** via a special L2CAP channel with a specific L2CAP channel ID (CID). Such notification may be accomplished via a vendor specific command, for example, of the upper HCI **708** and/or the lower HCI **710**.

[0059] The Bluetooth® enabled host device **806** may then pass to the Bluetooth® transceiver **802** control information which may be utilized for SBC compression, as well as to build AVDTP and L2CAP packets for the lower AVDTP **718** and the lower L2CAP **719**. Such control information may comprise, for example, SBC parameters and/or A2DP/AVDTP headers negotiated during the establishment of the Bluetooth® connection. When the Bluetooth® transceiver **802** receives the next HCI packet from the lower HCI **710**, the Bluetooth® transceiver **802** may check whether the HCI packet belongs to a special L2CAP CID. If the HCI packet does not belong to a special L2CAP CID, the HCI packet may be delivered directly from the lower HCI **710** to the LC **720**. If the HCI packet belongs to a special L2CAP CID, the Bluetooth® transceiver **802** may combine the fragments of the L2CAP packet from the upper L2CAP **706** and may pass it to the lower A2DP **714** and the SBC **716** for compression. Compressed packets may be communicated to the lower AVDTP **718** for delivery. The lower AVDTP **718** may add required headers to the received packets and may communicate the resulting headers and packets to the lower L2CAP **719**. The lower L2CAP **719** may add L2CAP headers and the resulting packets and headers may be communicated to the LC **720**.

[0060] Even though SBC encoding is utilized for data compression, the present invention may not be so limited and other methods of encoding, such as MP3 or AAC, for example, may be also utilized. Furthermore, the uncompressed data may comprise audio or video data. In another embodiment of the invention, the uncompressed data may comprise other types of data, such as file data. In this regard, after a Bluetooth® connection is established between the Bluetooth® enabled host device **806** and a peer Bluetooth® device, the Bluetooth® enabled host device **806** may indicate to the Bluetooth® transceiver **802** that uncompressed file data may be sent to the Bluetooth® transceiver **802** via a high-speed data channel or via a special L2CAP channel with a specific L2CAP channel ID (CID).

[0061] FIG. **9** is a block diagram of exemplary Bluetooth® transceiver utilizing audio signal compression, in accordance with an embodiment of the invention. Referring to FIG. **9**, the Bluetooth® transceiver **902** may comprise a transmit/receive switch **904**, a transmitter (Tx) block **906**, a receiver (Rx) block **908**, a baseband processing block **910** and a compression acceleration block **914**. The baseband processing block **910** may comprise a CPU **912**. The functionalities of the baseband processing block **910** and the CPU **912** may be the same as the functionalities of the baseband IC **305** and the processor **309**, as described above with regard to FIG. **3**.

[0062] The compression acceleration block **914** may comprise suitable circuitry, logic, and/or code and may be adapted to compress audio data received from the baseband processing block **910**. In one embodiment of the invention, the compression acceleration block **914** may comprise a digital signal processor implementing a low-complexity sub-band CODEC, for example.

[0063] In another embodiment of the invention, the Bluetooth® transceiver chip **902** may comprise an on-chip audio codec within the CPU **912**, that compresses received audio information on-chip. The audio codec within the CPU **912** may comprise a low complexity sub-band codec (SBC), for example. The Bluetooth® transceiver chip **902** may receive an audio stream comprising audio information, via a protocol stack that is external to the Bluetooth® transceiver chip **902**. The received audio stream may be generated via an audio/video distribution transport protocol (AVDTP) within the protocol stack that is external to the Bluetooth® transceiver chip **902**. A data channel may be established between the Bluetooth® transceiver chip **902** and a peer Bluetooth® device, for communicating the established audio stream to the Bluetooth® transceiver chip **902** for compression. The data channel may be established utilizing a logical link control and adaptation protocol (L2CAP) and/or an advanced audio distribution profile (A2DP) within the protocol stack that is external to the Bluetooth® transceiver chip **902**.

[0064] The Bluetooth® transceiver chip **902** may determine on-chip, a frame size of at least one audio frame comprising the compressed audio information. Exemplary SBC audio frame sizes are listed in Table 2a herein above. The Bluetooth® transceiver chip **902** may format on-chip, audio frames comprising the compressed audio information based on a determined frame size. The Bluetooth® transceiver chip **902** may format the audio frames on-chip by fragmenting the audio frames and/or by combining a plurality of the audio frames. The Bluetooth® transceiver chip **902** may format, the audio frames on-chip via the audio/video distribution transport protocol (AVDTP). The Bluetooth® transceiver chip may acquire the audio information on-chip via a pulse code modulation (PCM) wired connection.

[0065] FIG. **10** is a block diagram illustrating a Bluetooth® communication system, in accordance with an embodiment of the invention. Referring to FIG. **10**, the Bluetooth® communication system **1000** may comprise two Bluetooth®-enabled devices—**1002** and **1004**. The Bluetooth®-enabled devices **1002** and **1004** may be enabled to communicate via a Bluetooth® connection **1006** or via a high-speed data connection **1008**. The Bluetooth® devices **1002** and **1004** may utilize Bluetooth® protocol stacks, such as the Bluetooth® protocol stack described in FIG. **2**. In this regard, one or more layers from the Bluetooth® protocol stack, such as the L2CAP, within one Bluetooth® device may be used to discover a second Bluetooth® device. Furthermore, the Bluetooth® protocol stack may be used to establish, maintain and close a high-speed data connection with the second Bluetooth® device.

[0066] In one embodiment of the invention, the Bluetooth® device **1002** may utilize its Bluetooth® protocol

stack to discover the second Bluetooth® device **1004**. The Bluetooth® devices **1002** and **1004** may be enabled to communicate via a Bluetooth® connection **1006** and/or a high-speed data connection **1008**. The high-speed data connection **1008** may comprise an 802.11 connection and/or an ultra-wideband (UWB) connection. After the Bluetooth® device **1002** discovers the Bluetooth® device **1004**, the Bluetooth® protocol stack within the Bluetooth® device **1002** may configure the high-speed data connection **1008**. For example, the Bluetooth® device **1002** may configure a secure data link between the Bluetooth® devices **1002** and **1004** using the high-speed data connection **1008**. Furthermore, the Bluetooth® device **1002** may supply one or more secure keys for establishing the secure data link between the Bluetooth® devices **1002** and **1004**. Once the high-speed data link **1008** is established, data may be communicated between the Bluetooth® devices **1002** and **1004** using data rates that may be higher than the data rates supported by the Bluetooth® connection **1006**.

[**0067**] In another embodiment of the invention, data which may be communicated between the Bluetooth® devices **1002** and **1004** via the high-speed data connection **1008** may comprise audio data and/or video data. In addition, the high-speed data connection **1008** may be utilized for communication of data using any other communication protocol. For example, the high-speed data connection **1008** may be utilized for file transfer between devices **1002** and **1004** after connection between the devices has been established via the Bluetooth® connection **1006**.

[**0068**] Accordingly, the present invention may be realized in hardware, software, or a combination of hardware and software. The present invention may be realized in a centralized fashion in at least one computer system or in a distributed fashion where different elements are spread across several interconnected computer systems. Any kind of computer system or other apparatus adapted for carrying out the methods described herein is suited. A typical combination of hardware and software may be a general-purpose computer system with a computer program that, when being loaded and executed, controls the computer system such that it carries out the methods described herein.

[**0069**] The present invention may also be embedded in a computer program product, which comprises all the features enabling the implementation of the methods described herein, and which when loaded in a computer system is able to carry out these methods. Computer program in the present context means any expression, in any language, code or notation, of a set of instructions intended to cause a system having an information processing capability to perform a particular function either directly or after either or both of the following: a) conversion to another language, code or notation; b) reproduction in a different material form.

[**0070**] While the present invention has been described with reference to certain embodiments, it will be understood by those skilled in the art that various changes may be made and equivalents may be substituted without departing from the scope of the present invention. In addition, many modifications may be made to adapt a particular situation or material to the teachings of the present invention without departing from its scope. Therefore, it is intended that the present invention not be limited to the particular embodiment disclosed, but that the present invention will include all embodiments falling within the scope of the appended claims.

What is claimed is:

1. A method for processing data, the method comprising:

establishing a non-Bluetooth® connection between at least two Bluetooth®-enabled devices utilizing Bluetooth® protocol; and

communicating data between said at least two Bluetooth®-enabled devices utilizing said established non-Bluetooth® connection.

2. The method according to claim 1, further comprising receiving data via said established non-Bluetooth® connection.

3. The method according to claim 1, wherein said received data comprises uncompressed audio data.

4. The method according to claim 1, wherein said established non-Bluetooth® connection comprises at least one of the following: a local area network (LAN) connection, a personal area network (PAN) connection, a wireless universal serial bus (USB) connection, and a wireless ultra-wideband (UWB) connection.

5. The method according to claim 3, further comprising compressing said received data prior to said communicating.

6. The method according to claim 5, wherein said received data is compressed utilizing sub-band coding (SBC).

7. The method according to claim 5, further comprising transmitting said compressed received data via said established non-Bluetooth® connection.

8. A machine-readable storage having stored thereon, a computer program having at least one code section for processing data, the at least one code section being executable by a machine for causing the machine to perform steps comprising:

establishing a non-Bluetooth® connection between at least two Bluetooth® enabled devices utilizing Bluetooth® protocol; and

communicating data between said at least two Bluetooth®-enabled devices utilizing said established non-Bluetooth® connection.

9. The machine-readable storage according to claim 8, further comprising code for receiving data via said established non-Bluetooth® connection.

10. The machine-readable storage according to claim 8, wherein said received data comprises uncompressed audio data.

11. The machine-readable storage according to claim 8, wherein said established non-Bluetooth® connection comprises at least one of the following: a local area network (LAN) connection, a personal area network (PAN) connection, a wireless universal serial bus (USB) connection, and a wireless ultra-wideband (UWB) connection.

12. The machine-readable storage according to claim 10, further comprising code for compressing said received data prior to said communicating.

13. The machine-readable storage according to claim 12, wherein said received data is compressed utilizing sub-band coding (SBC).

14. The machine-readable storage according to claim 12, further comprising code for transmitting said compressed received data via said established non-Bluetooth® connection.

15. A system for processing data, the system comprising:

at least one processor that enables establishing of a non-Bluetooth® connection between at least two Bluetooth®-enabled devices utilizing Bluetooth® protocol; and

said at least one processor enables communication of data between said at least two Bluetooth®-enabled devices utilizing said established non-Bluetooth® connection.

16. The system according to claim 15, wherein said at least one processor enables receiving of data via said established non-Bluetooth® connection.

17. The system according to claim 15, wherein said received data comprises uncompressed audio data.

18. The system according to claim 15, wherein said established non-Bluetooth® connection comprises at least one of the following: a local area network (LAN) connection, a personal area network (PAN) connection, a wireless universal serial bus (USB) connection, and a wireless ultra-wideband (UWB) connection.

19. The system according to claim 17, wherein said at least one processor enables compressing of said received data prior to said communicating.

20. The system according to claim 19, wherein said received data is compressed utilizing sub-band coding (SBC).

21. The system according to claim 19, wherein said at least one processor enables transmitting of said compressed received data via said established non-Bluetooth® connection.

* * * * *