US 20090215398A1

(19) United States

(12) Patent Application Publication

Adler et al.

(10) Pub. No.: US 2009/0215398 A1

(43) Pub. Date: Aug. 27, 2009

(54) METHODS AND SYSTEMS FOR ESTABLISHING COMMUNICATIONS BETWEEN DEVICES

(76) Inventors: **Mitchell D. Adler**, Cupertino, CA (US); **Jonathan Jay Andrews**, Mountain view, CA (US)

Correspondence Address:
APPLE INC./BSTZ
BLAKELY SOKOLOFF TAYLOR & ZAFMAN LLP
1279 OAKMEAD PARKWAY
SUNNYVALE, CA 94085-4040 (US)

(21) Appl. No.: 12/037,058

(22) Filed: Feb. 25, 2008

Publication Classification

(51) Int. Cl.
H04B 7/00 (2006.01)

(52) U.S. Cl. 455/41.3

(57) ABSTRACT

At least certain embodiments of the disclosures relate to establishing communications between devices with a first connection. A second connection is established between the devices to transfer data between the devices and/or alter configurations of the devices. In one embodiment, a method includes establishing a first connection between a first device and a second device with a first networking standard and associated first network. The method further includes establishing a second connection between the first device and the second device with a second networking standard and associated second network based on the first connection providing information to at least one of the first and second devices regarding the second network. The method further includes transferring data between the first and second devices using the second networking standard. In one embodiment, the first networking standard is a Bluetooth networking standard and the second networking standard is a WiFi networking standard.

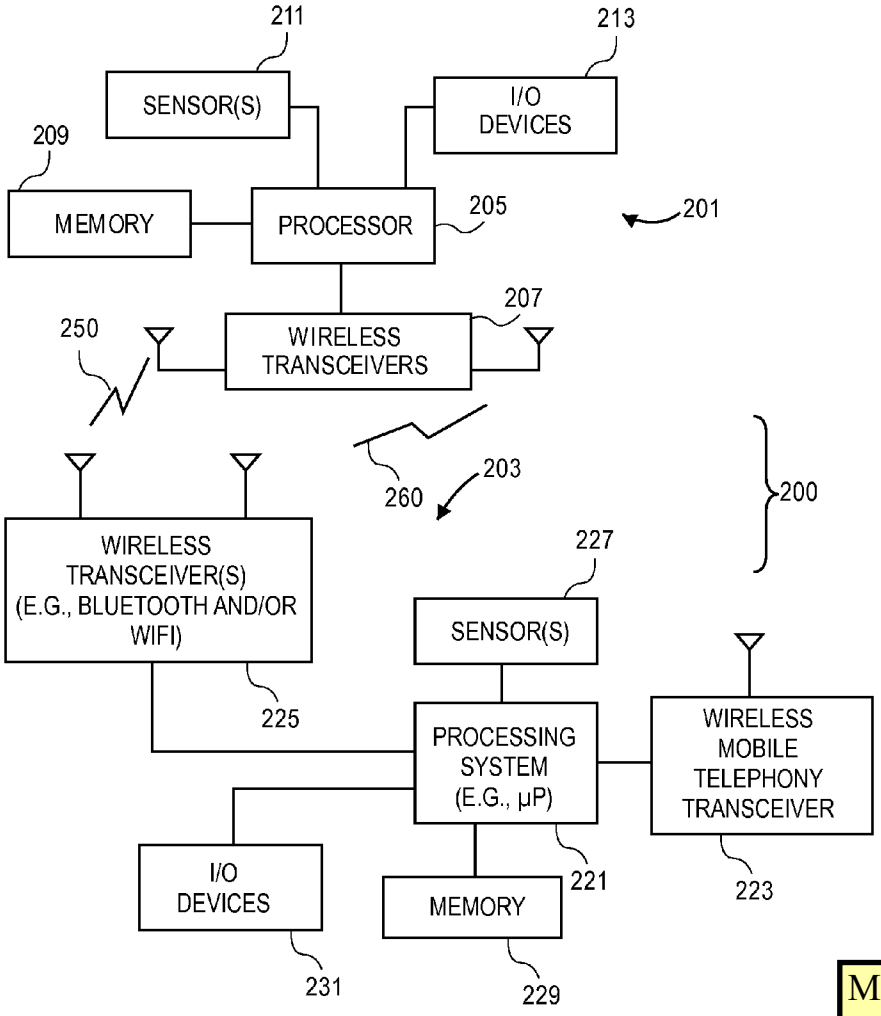

MICROSOFT CORP.
EXHIBIT 1013

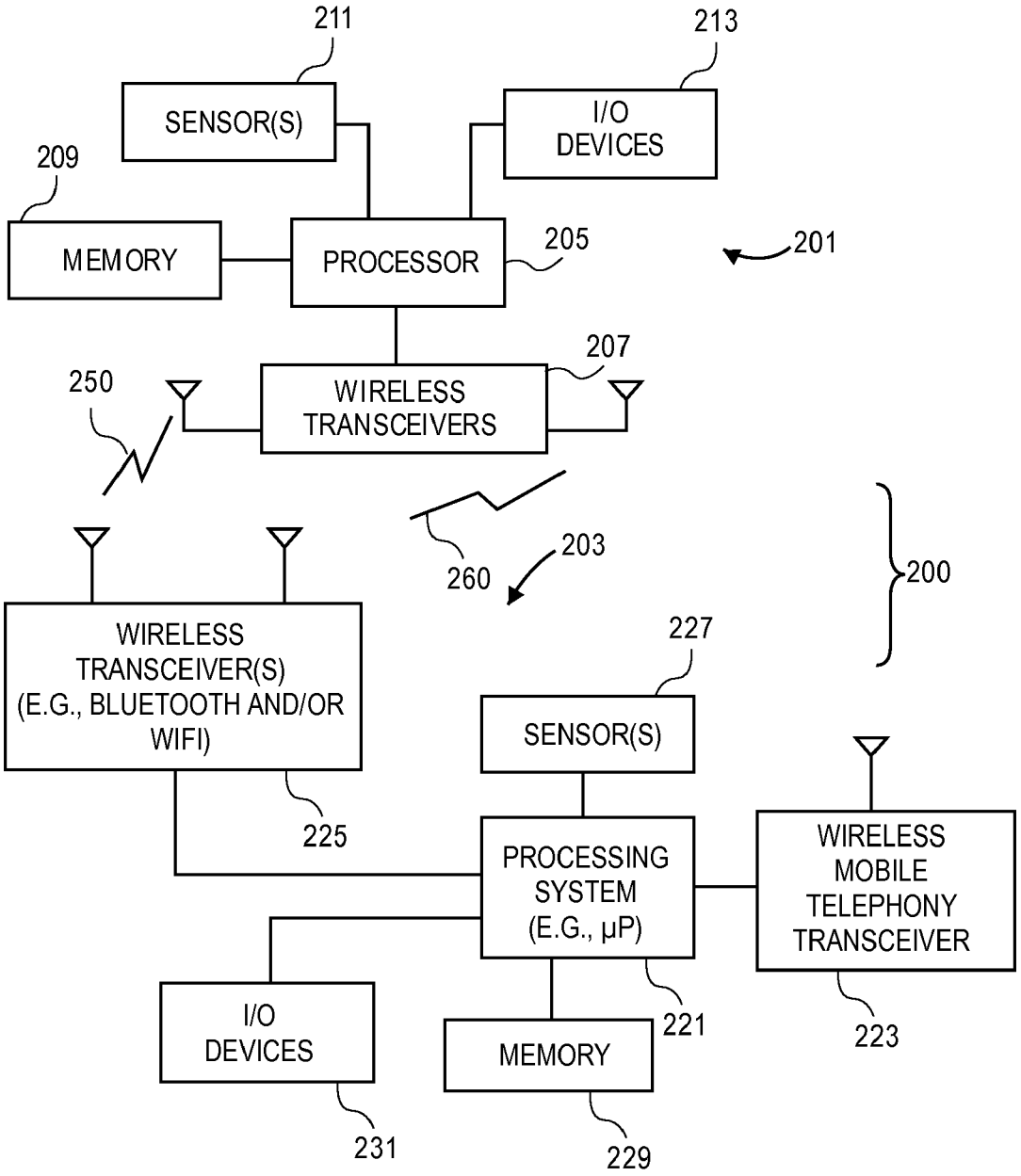
211
SENSOR(S)
213
I/O DEVICES
209
MEMORY
PROCESSOR
205
201
207
WIRELESS TRANSCEIVERS
250
260
203
200
WIRELESS TRANSCEIVER(S) (E.G., BLUETOOTH AND/OR WIFI)
227
SENSOR(S)
225
PROCESSING SYSTEM (E.G., μP)
WIRELESS MOBILE TELEPHONY TRANSCEIVER
I/O DEVICES
MEMORY
221
223
231
229

FIG. 1

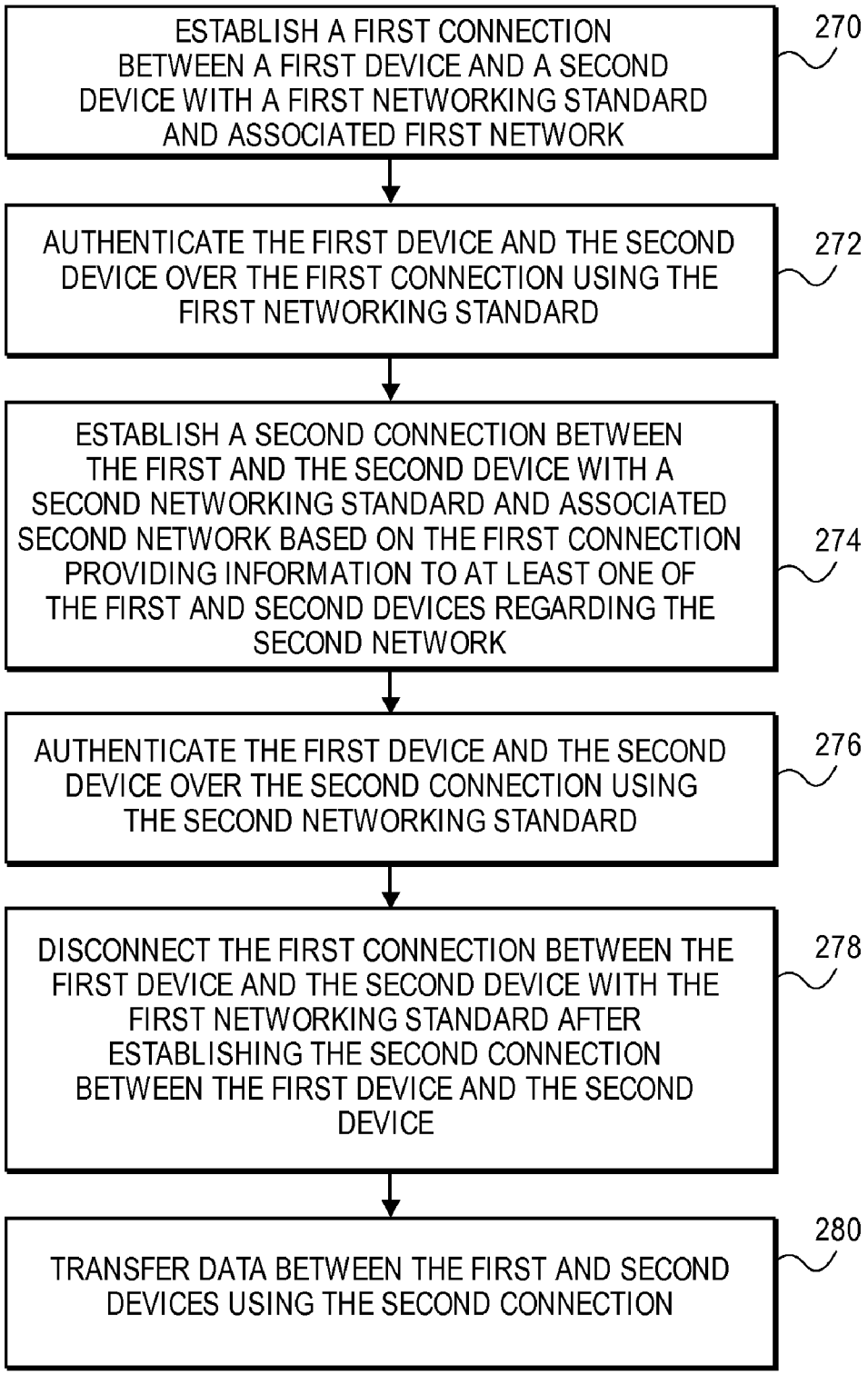
ESTABLISH A FIRST CONNECTION BETWEEN A FIRST DEVICE AND A SECOND DEVICE WITH A FIRST NETWORKING STANDARD AND ASSOCIATED FIRST NETWORK
270
AUTHENTICATE THE FIRST DEVICE AND THE SECOND DEVICE OVER THE FIRST CONNECTION USING THE FIRST NETWORKING STANDARD
272
ESTABLISH A SECOND CONNECTION BETWEEN THE FIRST AND THE SECOND DEVICE WITH A SECOND NETWORKING STANDARD AND ASSOCIATED SECOND NETWORK BASED ON THE FIRST CONNECTION PROVIDING INFORMATION TO AT LEAST ONE OF THE FIRST AND SECOND DEVICES REGARDING THE SECOND NETWORK
274
AUTHENTICATE THE FIRST DEVICE AND THE SECOND DEVICE OVER THE SECOND CONNECTION USING THE SECOND NETWORKING STANDARD
276
DISCONNECT THE FIRST CONNECTION BETWEEN THE FIRST DEVICE AND THE SECOND DEVICE WITH THE FIRST NETWORKING STANDARD AFTER ESTABLISHING THE SECOND CONNECTION BETWEEN THE FIRST DEVICE AND THE SECOND DEVICE
278
TRANSFER DATA BETWEEN THE FIRST AND SECOND DEVICES USING THE SECOND CONNECTION
280

FIG. 2

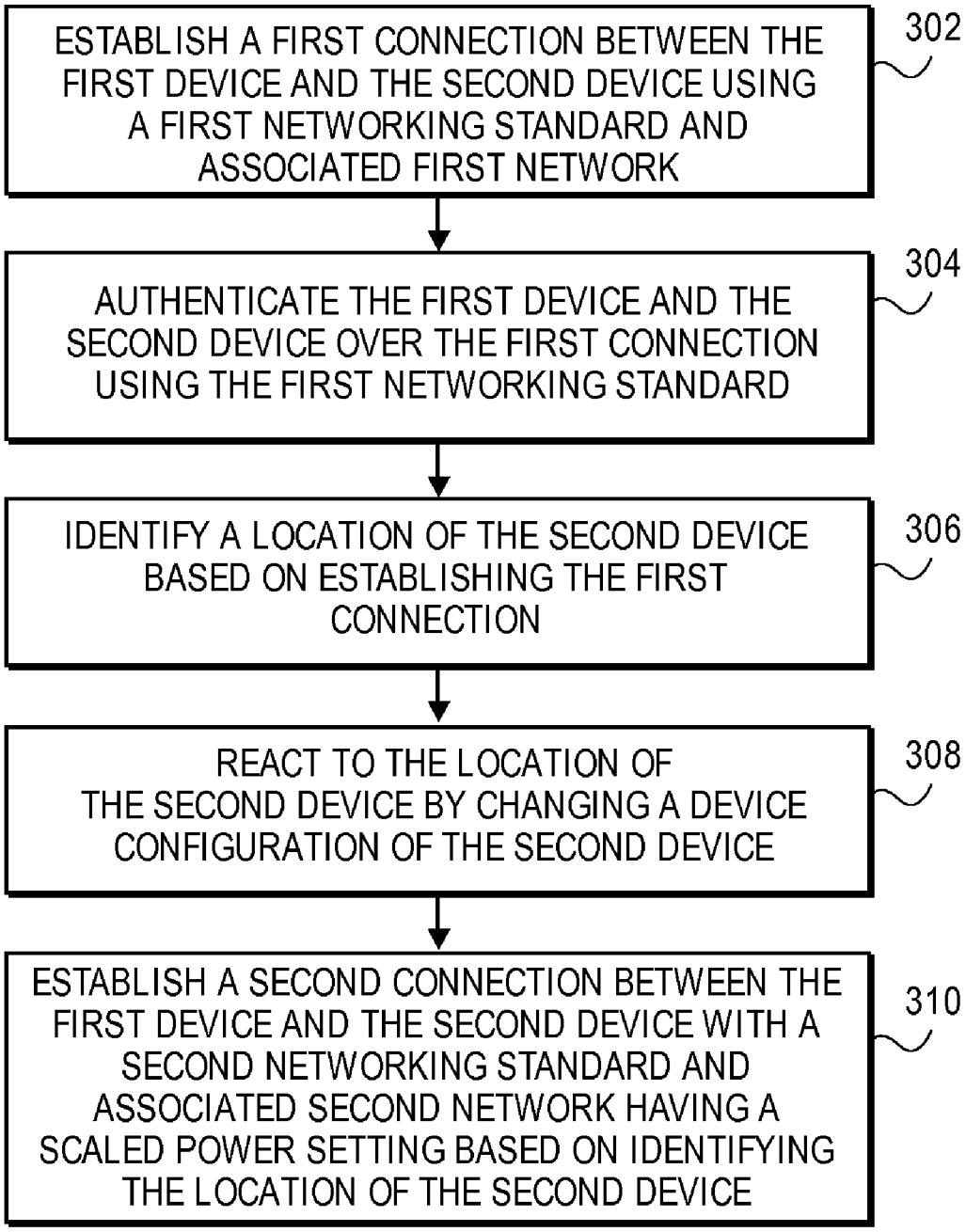
ESTABLISH A FIRST CONNECTION BETWEEN THE FIRST DEVICE AND THE SECOND DEVICE USING A FIRST NETWORKING STANDARD AND ASSOCIATED FIRST NETWORK
302
AUTHENTICATE THE FIRST DEVICE AND THE SECOND DEVICE OVER THE FIRST CONNECTION USING THE FIRST NETWORKING STANDARD
304
IDENTIFY A LOCATION OF THE SECOND DEVICE BASED ON ESTABLISHING THE FIRST CONNECTION
306
REACT TO THE LOCATION OF THE SECOND DEVICE BY CHANGING A DEVICE CONFIGURATION OF THE SECOND DEVICE
308
ESTABLISH A SECOND CONNECTION BETWEEN THE FIRST DEVICE AND THE SECOND DEVICE WITH A SECOND NETWORKING STANDARD AND ASSOCIATED SECOND NETWORK HAVING A SCALED POWER SETTING BASED ON IDENTIFYING THE LOCATION OF THE SECOND DEVICE
310

FIG. 3

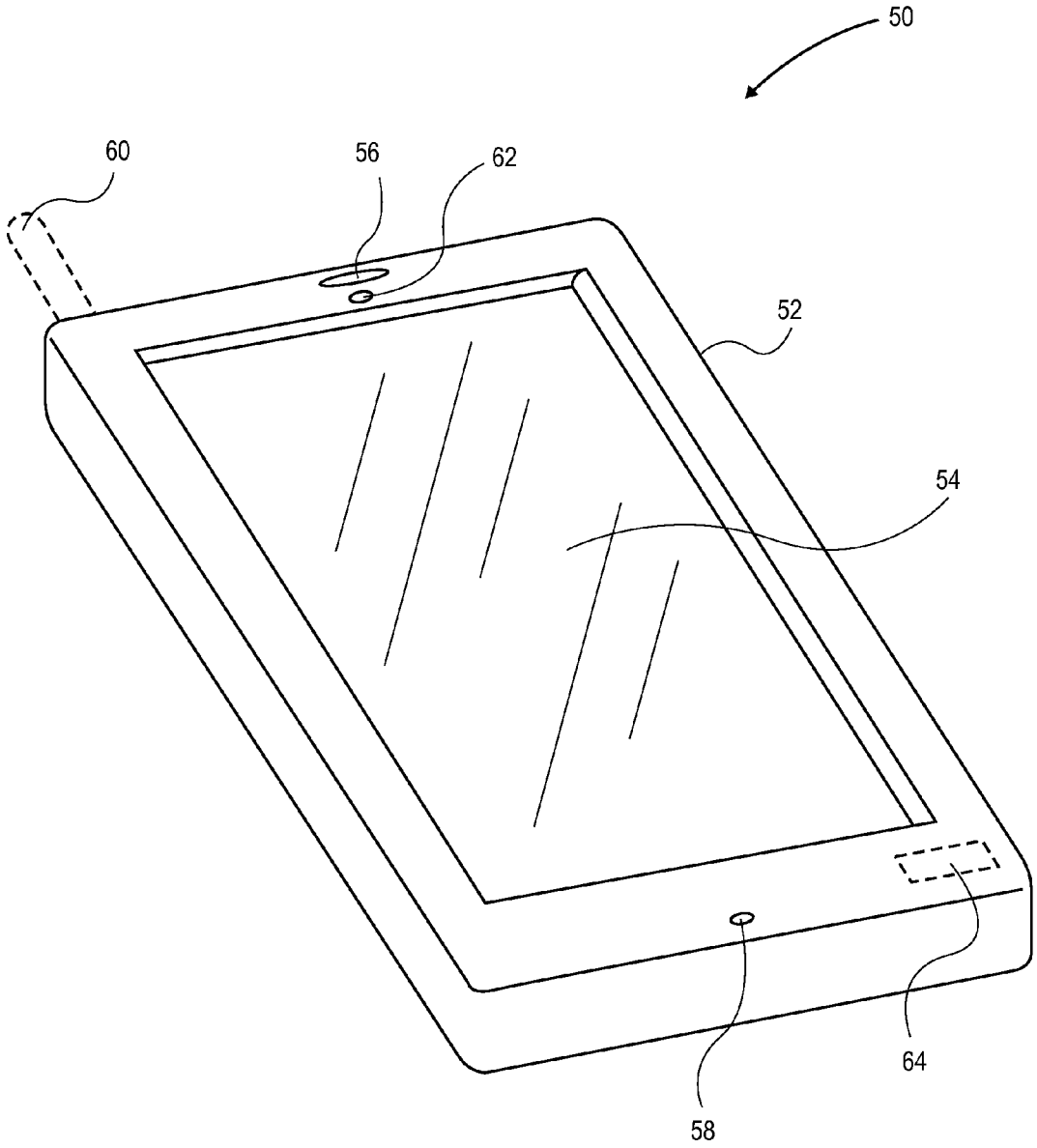

FIG. 4A

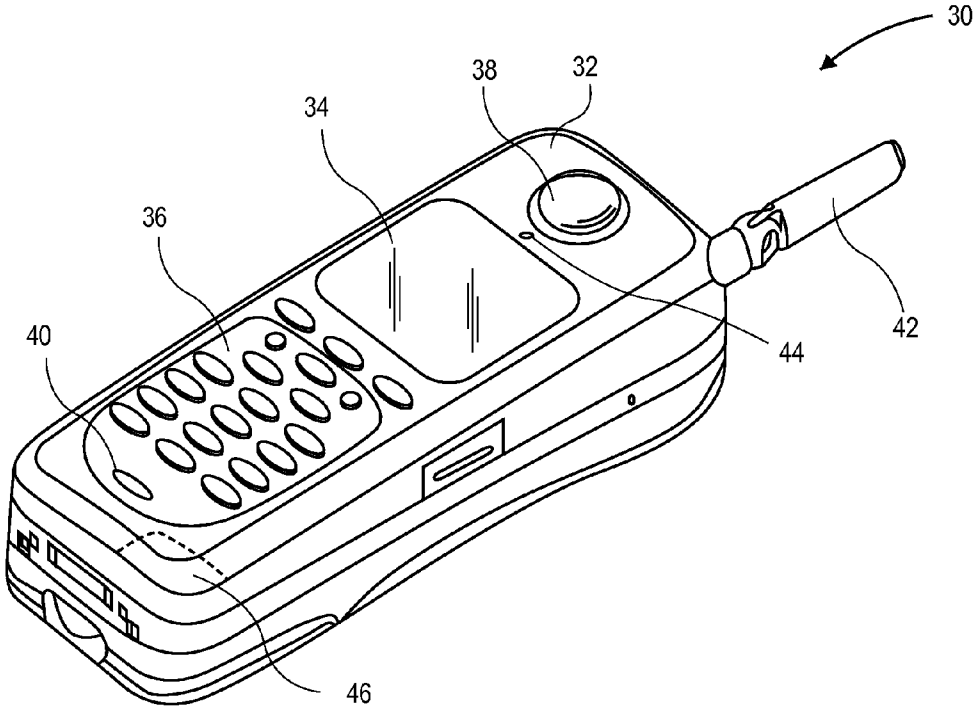

FIG. 4B

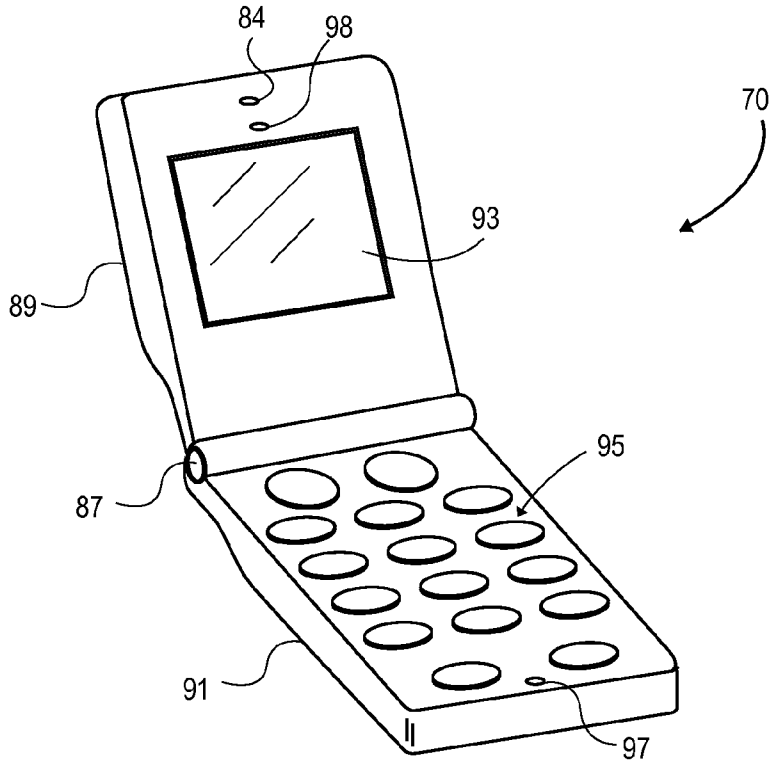

FIG. 4C

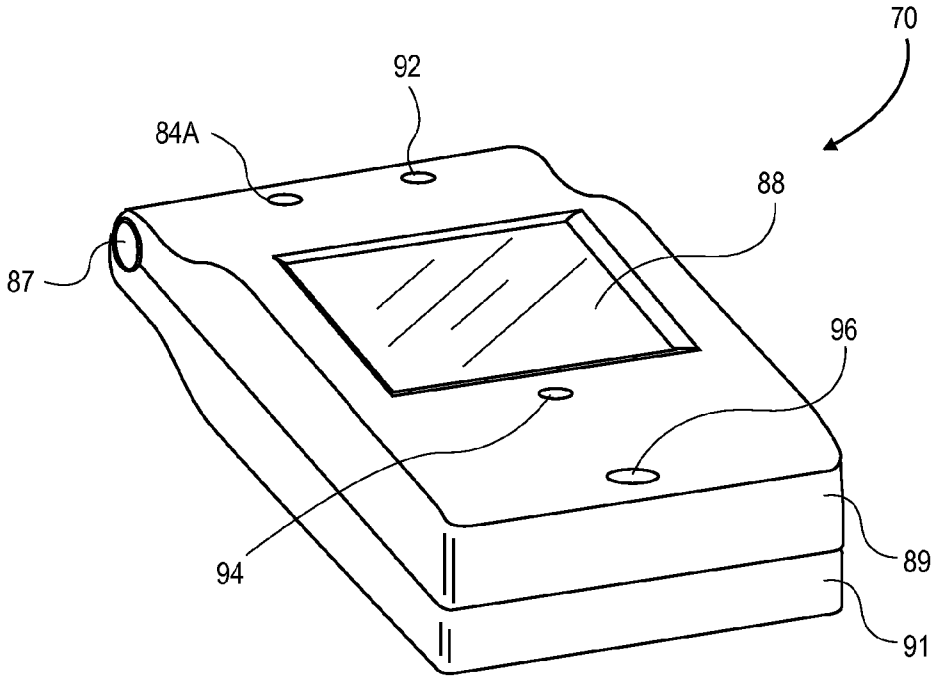

FIG. 4D

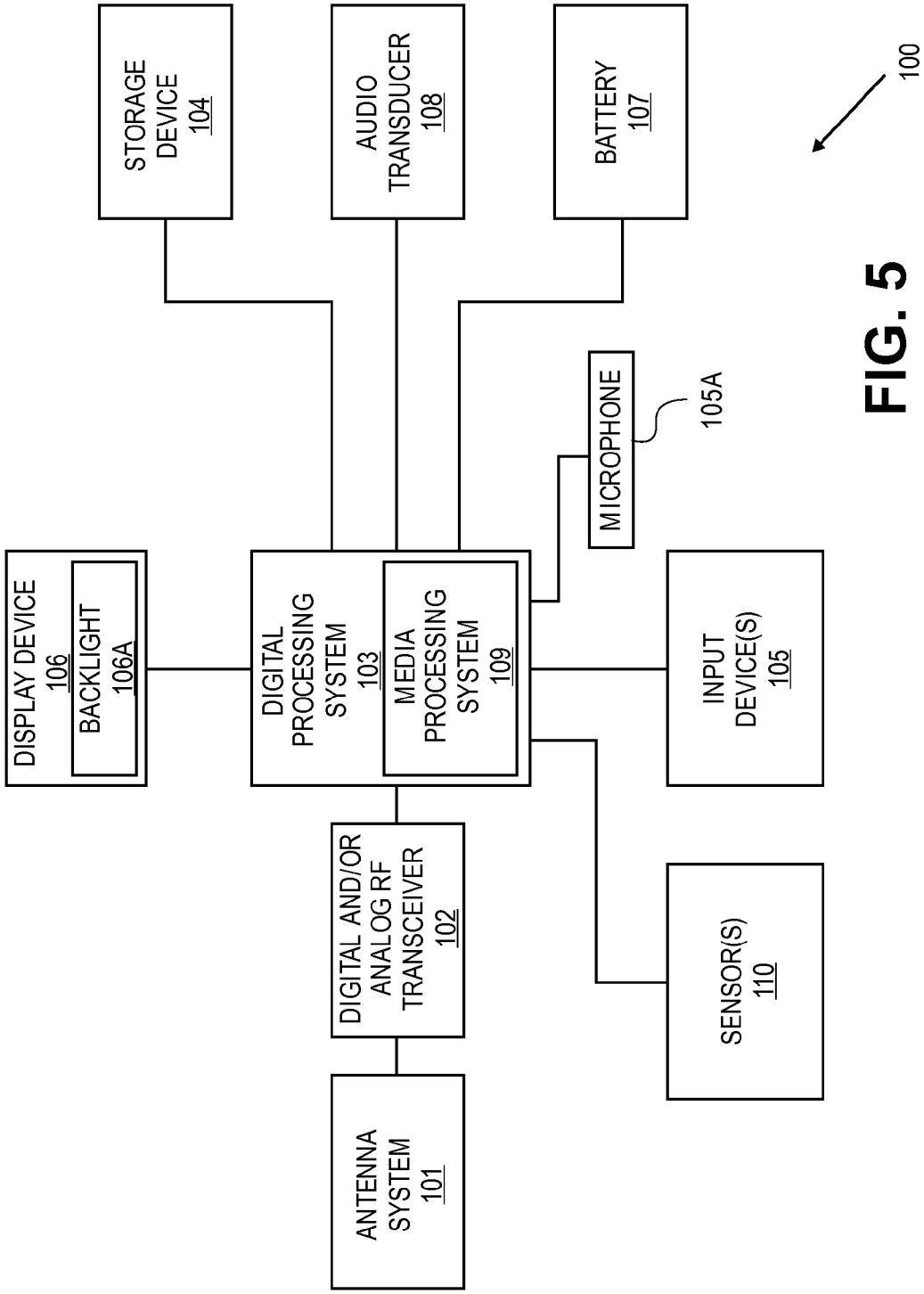
STORAGE DEVICE 104
AUDIO TRANSDUCER 108
BATTERY 107
100
MICROPHONE
105A
DISPLAY DEVICE 106
BACKLIGHT 106A
DIGITAL PROCESSING SYSTEM 103
MEDIA PROCESSING SYSTEM 109
INPUT DEVICE(S) 105
DIGITAL AND/OR ANALOG RF TRANSCEIVER 102
SENSOR(S) 110
ANTENNA SYSTEM 101

FIG. 5

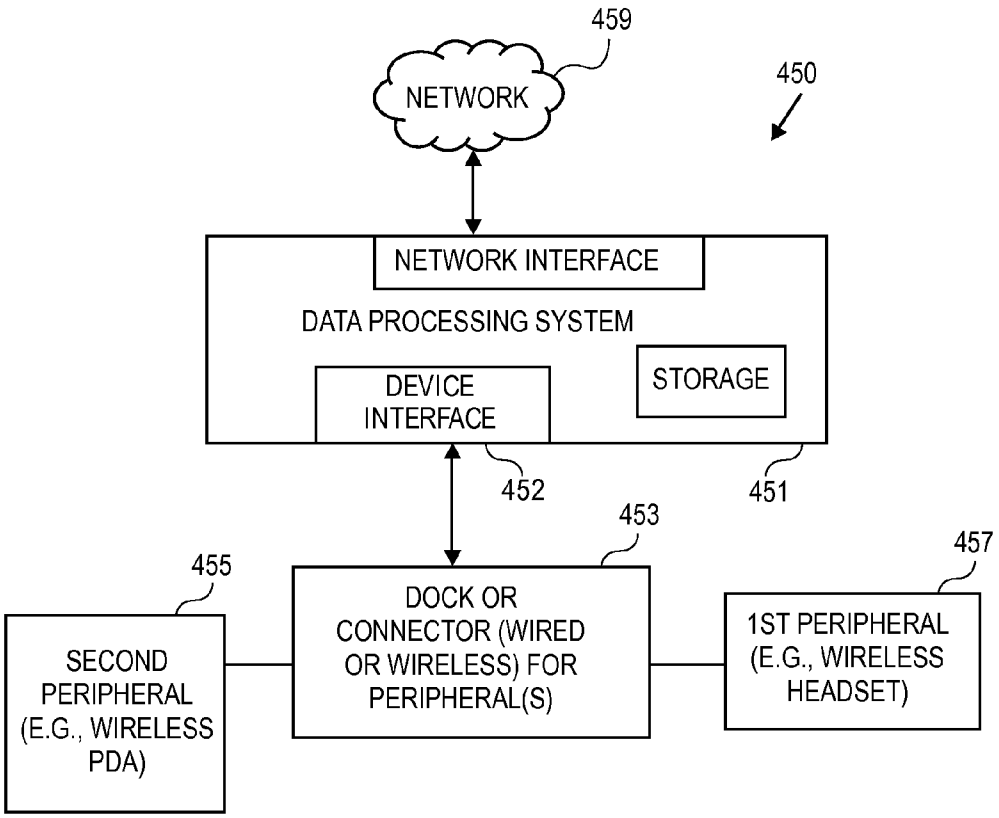
459
NETWORK
450
NETWORK INTERFACE
DATA PROCESSING SYSTEM
STORAGE
DEVICE INTERFACE
452
451
453
455
457
SECOND PERIPHERAL (E.G., WIRELESS PDA)
DOCK OR CONNECTOR (WIRED OR WIRELESS) FOR PERIPHERAL(S)
1ST PERIPHERAL (E.G., WIRELESS HEADSET)

FIG. 6

METHODS AND SYSTEMS FOR ESTABLISHING COMMUNICATIONS BETWEEN DEVICES

BACKGROUND OF THE INVENTION

[0001] Electronic devices, such as computer systems or wireless cellular telephones or other data processing systems, may often be used with other electronic devices. These devices communicate with each other using a variety of wires, cables, radio signals and/or infrared light beams.

[0002] A Bluetooth connection is an example wireless connection that automatically creates a connection between devices. Bluetooth is a networking standard that provides agreement at the physical level (e.g., radio frequency standard) and at the protocol level where devices have to agree on when information will be sent and how much information will be sent. Bluetooth networking transmits data via low power radio waves (e.g., one milliwatt) with a frequency of approximately 2.45 gigahertz (GHz) in order to avoid the chance of interference between various electronic devices.

[0003] When Bluetooth-capable devices come within range of each other, an electronic conversation occurs to determine whether these devices have data to share or whether one needs to control the other. The user does not have to press a button or give a command because the electronic conversation occurs automatically.

[0004] A Bluetooth pairing or partnership is an example of a relationship created between two devices or a device and a data processing system. It is created by the user in order to exchange information in a secure manner. Creating a Bluetooth partnership between two devices involves entering the same personal identification number (PIN) or passkey on both devices; creating such a partnership is a one-time process. Once a partnership is created, the devices can recognize the partnership and exchange information without entering a PIN again.

[0005] One prior approach for connecting electronic devices includes establishing a Bluetooth connection between the devices. Then, authentication occurs between the devices. For example, a Bluetooth device may have different types of security modes such as service-level security and device-level security that protect the Bluetooth device from unauthorized data transmission. Bluetooth users can establish trusted devices that exchange data without asking permission. Finally, the Bluetooth devices can exchange information using the Bluetooth connection. However, the Bluetooth connection has a low power signal and a low data throughput resulting in user frustration.

SUMMARY OF THE DESCRIPTION

[0006] At least certain embodiments of the disclosures relate to establishing communications between devices with a first connection. In these embodiments, a second connection is established between the devices to transfer data between the devices and/or alter configurations of the devices.

[0007] In at least certain embodiments, a method establishes communications between devices and transfers data between these devices. The method includes establishing a first connection between a first device and a second device with a first networking standard and associated first network. The method further includes establishing a second connection between the first device and the second device with a second networking standard and associated second network based on the first connection providing information to at least one of the first and second devices regarding the second network. The method further includes transferring data between the first and second devices using the second networking standard and associated second network. The method further includes disconnecting the first connection between the first device and the second device with the first networking standard after establishing the second connection between the first device and the second device. The method further includes transferring data between the first and second devices using the second connection and second networking standard. In one embodiment, the first networking standard is a Bluetooth networking standard and the second networking standard is a WiFi networking standard.

[0008] In some embodiments, a method establishes a wireless connection between devices and performs device configuration changes based on the wireless connection. The method includes establishing a first connection between the first device and the second device using a first networking standard. The method further includes identifying a location of the second device based on establishing the first connection between the first device and the second device. The method further includes reacting to the location of the second device by changing a device configuration of the second device. In one embodiment, the method further includes changing the device configuration of the second device by establishing a second connection between the first device and the second device with a second networking standard having a scaled power setting based on identifying the location of the second device.

[0009] Other systems and methods are also described, and machine readable media, which contain executable instructions to cause a machine to operate as described herein, are also described.

BRIEF DESCRIPTION OF THE DRAWINGS

[0010] The present invention is illustrated by way of example and not limitation in the figures of the accompanying drawings in which like references indicate similar elements.

[0011] FIG. **1** shows an example of a system which includes an example of a device and an example of a data processing system which is used with the device.

[0012] FIG. **2** is a flow chart of an embodiment of a method of the disclosures described herein.

[0013] FIG. **3** is a flow chart of an embodiment of a method of the disclosures described herein.

[0014] FIG. **4**A is a perspective view of a portable data processing system in accordance with one embodiment of the disclosures described herein.

[0015] FIG. **4**B is a perspective view of a portable data processing system in accordance with one embodiment of the disclosures described herein.

[0016] FIG. **4**C is a perspective view of a portable data processing system in a first configuration (e.g. in an opened configuration) in accordance with one embodiment of the disclosures described herein.

[0017] FIG. **4**D is a perspective view of a portable data processing system in a second configuration (e.g. in a closed configuration) in accordance with one embodiment of the disclosures described herein.

[0018] FIG. **5** is a block diagram of a data processing system in which embodiments of the disclosures can be implemented.

[0019] FIG. **6** shows, in block diagram form, a data processing system with two devices and a dock or other connector which couples the devices to the data processing system.

DETAILED DESCRIPTION

[0020] Various embodiments and aspects of the disclosures will be described with reference to details discussed below, and the accompanying drawings will illustrate the various embodiments. The following description and drawings are illustrative of the invention and are not to be construed as limiting the invention. Numerous specific details are described to provide a through understanding of various embodiments of the present invention. However, in certain instances, well-known or conventional details are not described in order to provide a concise discussion of embodiments of the present disclosures.

[0021] Some portions of the detailed descriptions which follow are presented in terms of algorithms which include operations on data stored within a computer memory. An algorithm is generally a self-consistent sequence of operations leading to a desired result. The operations typically require or involve physical manipulations of physical quantities. Usually, though not necessarily, these quantities take the form of electrical or magnetic signals capable of being stored, transferred, combined, compared, and otherwise manipulated. It has proven convenient at times, principally for reasons of common usage, to refer to these signals as bits, values, elements, symbols, characters, terms, numbers, or the like.

[0022] It should be borne in mind, however, that all of these and similar terms are to be associated with the appropriate physical quantities and are merely convenient labels applied to these quantities. Unless specifically stated otherwise as apparent from the following discussion, it is appreciated that throughout the description, discussions utilizing terms such as "processing" or "computing" or "calculating" or "determining" or "displaying" or the like, can refer to the action and processes of a data processing system, or similar electronic device, that manipulates and transforms data represented as physical (electronic) quantities within the system's registers and memories into other data similarly represented as physical quantities within the system's memories or registers or other such information storage, transmission or display devices.

[0023] The present invention can relate to an apparatus for performing one or more of the operations described herein. This apparatus may be specially constructed for the required purposes, or it may comprise a general purpose computer selectively activated or reconfigured by a computer program stored in the computer. Such a computer program may include instructions for performing the operations described herein and may be stored in a machine (e.g. computer) readable storage medium, such as, but is not limited to, any type of disk including floppy disks, optical disks, CD-ROMs, and magnetic-optical disks, read-only memories (ROMs), random access memories (RAMs), erasable programmable ROMs (EPROMs), electrically erasable programmable ROMs (EEPROMs), magnetic or optical cards, or any type of media suitable for storing electronic instructions, and each coupled to a bus.

[0024] A machine-readable medium includes any mechanism for storing or transmitting information in a form readable by a machine (e.g., a computer). For example, a machine-readable medium includes read only memory ("ROM"); random access memory ("RAM"); magnetic disk storage media; optical storage media; flash memory devices; electrical, optical, acoustical or other form of propagated signals (e.g., carrier waves, infrared signals, digital signals, etc.); etc.

[0025] FIG. **1** shows an example of a system **200** which includes a device **201**, which may also be referred to as an accessory, and a data processing system **203** capable of exchanging data with the device **201**. In the example of FIG. **1**, the device **201** communicates with the data processing system **203** through a wireless personal area network (WPAN) interface, such as a Bluetooth interface and/or 802.11 networking (WiFi), and the data processing system **203** may be a wireless mobile cellular telephone or a personal digital assistant (PDA) which also includes a wireless mobile cellular telephone or a general purpose computer system, such as a handheld computer which includes a wireless mobile cellular telephone. It will be appreciated that while a particular type of device and a particular type of data processing system are shown in FIG. **1**, other types of devices and data processing systems may be used in alternative embodiments. For example, in alternative embodiments, a device may be a wireless headset or a wired headset or a wired or wireless keyboard or a wired or wireless cursor control device or other wired or wireless input or output devices; in other cases, the device may be considered to be a data processing device which is similar to a PDA or cellular telephone or general purpose computer system. In alternative embodiments, the data processing system may be a general purpose computer system, or special purpose computer system, or an entertainment system, or a PDA or an embedded device within another device, or a media player, etc. The device **201** includes a processor **205** which is coupled to one or more sensors **211**, input/output devices **213**, memory **209**, and wireless transceiver(s) **207**. The processor **205** controls the operation of the device **201** by operating the wireless transceiver **207**, which may be, for example, a Bluetooth or WiFi transceiver or other types of transceivers used to create a wireless local area network (WLAN) or a WPAN, and by operating the I/O devices **213**, in response to signals from the wireless transceiver **207** and/or the sensors and/or processes executing on the processor **205**.

[0026] In the case where the device **201** is a wireless headset for a telephone, the wireless transceiver **207** establishes a wireless communication link with a telephone which acts as a data processing system and which sends audio data to be played by an I/O device **213** (e.g., audio transducer) and which receives audio data from a microphone (not shown). Thus, the wireless headset acts in the same manner as a wired headset on a telephone.

[0027] The sensors **211** may be one or more sensors on the device **201** which are designed to detect or measure user activity or a device context. The sensors **211** may include, for example, a proximity sensor and/or an ambient light sensor and/or an accelerometer and/or other sensors described herein. The sensor(s) **211** provides sensor data (e.g. proximity data) to the processor **205** which may process this data or may transmit, as described below, the sensor data to the data processing system for processing.

[0028] The data processing system **203** includes a processing system **221**, such as a set of one or more microprocessors, which is coupled to a wireless mobile telephony transceiver **223**; the wireless mobile telephony transceiver **223** may be a wireless mobile cellular telephone transceiver which is, to at least some extent, controlled by the processing system **221**.

[0029] In one embodiment, the data processing system **203** may be a handheld PDA or handheld general purpose computer which includes a wireless cellular telephone. In this case, the RF circuitry needed for the wireless cellular telephone may be provided by the wireless mobile telephony transceiver **223**.

[0030] The data processing system **203** also includes one or more sensors **227**, memory **229**, I/O devices **231** and at least one additional wireless transceiver **225**, each of which are coupled to the processing system **221**. The processing system **221** may include a set of one or more microprocessors which are coupled to the rest of the data processing system **203** through one or more buses.

[0031] The one or more sensors **227** may include, for example, a proximity sensor and/or an ambient light sensor and/or an accelerometer and/or other sensors described herein. The sensor data from these one or more sensors **227** is provided to the processing system **221** which may process this data or may transmit this sensor data to the device for processing, as described herein, or both of the device and the processing system **221** may process the sensor data.

[0032] The I/O (input/output) devices **231** may include one or more of (a) a keyboard; (b) a touch input panel; (c) a cursor control device (such as, e.g., a joystick or trackpad); (d) speaker; (e) microphone; (f) buttons (such as, e.g., "send" and "end" or other buttons for a cellular telephone); (g) a display device; and (h) other known input/output devices. In one embodiment, a touch input panel may be integrated with a display device to provide both input and output capabilities on the same surface of the display device; this is described further below. These I/O devices allow a user to enter instructions or commands or data to the processing system **221** to cause the system to operate in a manner desired by the user.

[0033] The memory **229** may be any combination of DRAM or flash memory or other types of memory including, for example, a magnetic hard drive, and the memory **229** may be coupled to the processing system through one or more memory controllers. The memory **229** may store computer program instructions, including a computer operation system (OS) and user application programs, such as, for example, a web browser application, an email application, a calendar program, an address book application, and other possible applications. The memory **229** may also store user data such as, for example, address and/or contact information, calendar information (e.g. events and tasks), bookmarks/favorites (e.g. "URLs") and other user data (e.g. word processing documents, spreadsheets, presentations, etc.).

[0034] The processing system **221** may retrieve and store computer program instructions and data from the memory **229** in order to allow the user to operate the data processing system **203**. Moreover, the memory **229** may store music and/or other media for playback on the data processing system **203**, which can allow the user to display and select music and/or other media for playback on a speaker (e.g. an earphone) or a wireless headset of a device, such as device **201**.

[0035] The wireless transceiver(s) **225** may include one or more wireless transceivers which provide wireless connectivity to other devices, such as the device **201** or a wireless network (e.g. a WiFi network or other wireless local area networks (WLAN) or a wireless personal area network (WPAN), etc.). The wireless transceiver(s) **225** are coupled to the processing system **221** to provide data to the data processing system **203**.

[0036] In one embodiment, the wireless transceiver(s) **225** include a Bluetooth compliant transceiver to couple wirelessly the data processing system **203** to the device **201** and optionally other devices (e.g. a wireless keyboard) and a WiFi compliant transceiver (e.g. IEEE 802.11 a/g compliant transceiver) to wirelessly couple the system **203** to a wireless network and/or other devices such as the device **201**.

[0037] The device **201** and the data processing system **203** may be paired together using known techniques, such as the techniques described herein, to create a Bluetooth partnership. The pairing may alternatively involve other techniques which register one device with another device to provide a secure, authenticated communication channel between the device **201** and the data processing system **203**.

[0038] In one embodiment, the device **201** and the data processing system **203** may be capable of working together to exchange data and/or alter device configuration settings based on a location of the device **201** or data processing system **203**. For example, if the device **201** is a home computer and the data processing system **203** is located at home, then the wireless transceiver **225** of the data processing system **203** and the wireless transceiver **207** of the device **201** may establish a Bluetooth connection. The wireless transceiver **225** of the data processing system and the wireless transceiver **207** of the device **201** may then establish a WiFi connection based on the Bluetooth connection providing information to establish the WiFi connection. For example, the Bluetooth connection may inform the data processing system **203** of parameters and password information to establish the WiFi connection with the device **201**. In this situation, the device **201** and the data processing system **203** may exchange data, such as instructions which automatically cause a change in configuration of the data processing system **203** given its location at home.

[0039] In some embodiments, the data processing system **203** includes a transceiver **225** to detect a wireless signal (not shown) received from a device **201** transmitting the wireless signal. The data processing system **203** includes a processing system **221** coupled to the transceiver **225**. The processing system **221** is configured to respond to the detected wireless signal by establishing a first connection **250** between the data processing system **203** and the device **201** using a first networking standard (e.g., Bluetooth). The processing system **221** is further configured to establish a second connection **260** between the data processing system **203** and the device **201** with a second networking standard based on the first connection **250**.

[0040] In one embodiment, the first connection **250** may provide to the data processing system **203** and/or device **201** parameters and password information for establishing the second connection **260**. In another embodiment, the first connection **250** (e.g., Bluetooth beacon) provides the device **201** information regarding a machine (e.g., router, wireless access point, server) associated with the WiFi network in order to locate the WiFi network and establish a WiFi connection with the data processing system **203**. In another embodiment, the first connection **250** (e.g., Bluetooth beacon) informs the device **201** of an interesting nearby WiFi network. The device **201** can then locate the WiFi network and establish a WiFi connection with the data processing system **203**.

[0041] In one embodiment, the processing system **221** is further configured to transfer data between the data processing system **203** and the device **201** using the second networking standard (e.g., WiFi) associated with the second connec-

tion **260** in order to transfer data at a high throughput or transmission rate. In other embodiments, a single transceiver **207** establishes the first and second connections with a single transceiver **225**.

[0042] At least certain embodiments of the disclosures may include a digital media player, such as a portable music and/or video media player, which may include a media processing system to present the media, a storage device to store the media and may further include a radio frequency (RF) transceiver (e.g., an RF transceiver for a cellular telephone) coupled with an antenna system and the media processing system. In certain embodiments, media stored on a remote storage device may be transmitted to the media player through the RF transceiver. The media may be, for example, one or more of music or other audio, still pictures, or motion pictures.

[0043] The portable media player may include a media selection device, such as a click wheel input device on an iPod® or iPod Nano® media player from Apple Computer, Inc. of Cupertino, Calif., a touch screen input device, push-button device, movable pointing input device or other input device. The media selection device may be used to select the media stored on the storage device and/or the remote storage device. The portable media player may, in at least certain embodiments, include a display device which is coupled to the media processing system to display titles or other indicators of media being selected through the input device and being presented, either through a speaker or earphone(s), or on the display device, or on both display device and a speaker or earphone(s). Examples of a portable media player are described in published U.S. patent application numbers 2003/0095096 and 2004/0224638, both of which are incorporated herein by reference.

[0044] Embodiments of the disclosures described herein may be part of other types of data processing systems, such as, for example, entertainment systems or personal digital assistants (PDAs), or general purpose computer systems, or special purpose computer systems, or an embedded device within another device, or cellular telephones which do not include media players, or devices which combine aspects or functions of these devices (e.g., a media player, such as an iPod®, combined with a PDA, an entertainment system, and a cellular telephone in one portable device).

[0045] FIG. **2** is a flow chart of an embodiment of a method of the disclosures described herein. In at least certain embodiments, the method establishes communications between devices and transfers data between these devices. The method includes establishing a first connection between a first device and a second device with a first networking standard and associated first network at block **270**. The method further includes authenticating the first device and the second device over the first connection using the first networking standard at block **272**. The method further includes establishing a second connection between the first device and the second device with a second networking standard and associated second network based on the first connection providing information to at least one of the first and second devices regarding the second network at block **274**. The method further includes authenticating the first device and the second device over the second connection using the second networking standard at block **276**. The method further includes disconnecting the first connection between the first device and the second device with the first networking standard at block **278** after establishing the second connection between the first device and the second device. The disconnecting of the first connection can occur at any time after the second connection is established. The method further includes transferring data between the first and second devices using the second connection and second networking standard at block **280**.

[0046] In one embodiment, the first networking standard is a Bluetooth networking standard and the second networking standard is a WiFi networking standard. Using a Bluetooth connection for the first connection enables an automatic discovery of Bluetooth devices within a certain range of each other. The Bluetooth signal is transmitted at a low power thus conserving battery power. After the Bluetooth connection has been established, a WiFi connection can be used for the second connection in order to use a higher power signal to transfer data at a high throughput such as 54 megabits of data per second or higher.

[0047] In one embodiment, the first connection is across a wireless local area network (WLAN) such as a Bluetooth network that provides the device(s) with protocols, security parameters and password information for establishing the second connection which is also across a WLAN such as a WiFi network that is further connected to the internet. In another embodiment, the first connection (e.g., Bluetooth beacon) provides the device(s) information regarding a machine (e.g., router, wireless access point, server, other device) associated with the WiFi network in order to locate the WiFi network and establish a WiFi connection with the data processing system **203**. In another embodiment, the first connection **250** (e.g., Bluetooth beacon) informs the device **201** of an interesting nearby WiFi network. The device **201** can then locate the WiFi network and establish a WiFi connection with the data processing system **203**.

[0048] In one embodiment, a Bluetooth connection is automatically established between a home computer and a cellular phone located within a certain proximity to the home computer. The home computer and cellular phone are authenticated as trusted devices. The cellular phone may appear as a wireless device that is hidden from the home computer until a Bluetooth connection is established. Then, a WiFi connection can be established between the home computer and the cellular phone for various purposes. For example, the home computer may have recently downloaded music that needs to be transferred to the cellular phone. The transfer of musical data can occur at a high rate using the WiFi connection. Alternatively, the cellular phone may contain data that needs to be transferred to the home computer via the WiFi or other high speed connection. The home computer and cellular phone can also perform synchronization operations at this time.

[0049] In another embodiment, a Bluetooth connection is automatically established between a data processing system located in an automobile and a cellular phone located within a certain proximity to the automobile. The data processing system and cellular phone are authenticated as trusted devices. Next, a WiFi connection can be established between the data processing system and the cellular phone for various purposes. For example, the cellular phone may contain data (e.g., music, maps) that needs to be transferred to the data processing system via the WiFi or other high speed connection. Also, incoming phone calls associated with the cellular phone can be routed through the data processing system in order for a driver of the automobile to receive phone calls in a hands free manner.

[0050] FIG. **3** is a flow chart of an embodiment of a method of the disclosures described herein. In one embodiment, the method establishes a wireless connection between devices and performs device configuration changes based on the wireless connection. The method includes establishing a first connection between the first device and the second device using a first networking standard at block **302**. The method further includes authenticating the first device and the second device over the first connection using the first networking standard at block **304**. The method further includes identifying a location of the second device based on establishing the first connection between the first device and the second device at block **306**. The method further includes reacting to the location of the second device by changing a device configuration of the second device at block **308**. In one embodiment, the method further includes changing the device configuration of the second device by establishing a second connection between the first device and the second device with a second networking standard having a scaled power setting based on identifying the location of the second device.

[0051] For example, if the second device is located at home, then an appropriate scaled power setting of the second connection is applied to the second device. Devices located closer in distance require a lower power setting associated with the second connection. The second connection may be a WiFi connection or other type of peer to peer connection. The first connection may be a Bluetooth connection that indicates a certain proximity between the first and second devices. This proximity determines the power setting of the WiFi connection.

[0052] In one embodiment, reacting to the location of the second device includes automatically transferring data between the first device and the second device using the second connection. For example, the first device may be located in an automobile and the second device may be a cellular telephone. The two devices establish the second connection and then certain data may automatically transfer between the devices.

[0053] In some embodiments, changing the device configuration of the second device includes at least one of changing email server settings of the second device, changing a ringer state of the second device, changing a background setting of the second device, prohibiting voice calls to or from the second device, switching from a cellular network for voice calls to a voice over IP network, and changing a chat status.

[0054] In other embodiments, device configurations of the first device and/or second device are altered in response to establishing the first connection between the first and second devices and determining the location of these devices. For example, device configurations of either device may be altered if it is determined that the devices are located in a movie theatre, coffee shop, airport, etc.

[0055] FIG. **4**A shows a portable device **50** in accordance with one embodiment of the invention. The portable device **50** may include a housing **52**, a display/input device **54**, a speaker **56**, a microphone **58** and an optional antenna **60** (which may be visible on the exterior of the housing or may be concealed within the housing) with the antenna **60** being coupled to one or more wireless transceivers (e.g., mobile telephony, Bluetooth, WiFi). The portable device **50** also may include a proximity sensor **62** and an accelerometer **64** and optionally other sensors (e.g. an ambient light sensor). The portable device **50** may be a cellular telephone or a device which is an integrated PDA and a cellular telephone or a device which is an integrated media player and a cellular telephone or a device which is both an entertainment system (e.g. for playing games) and a cellular telephone, or the portable device **50** may be other types of devices described herein. In one particular embodiment, the portable device **50** includes a cellular telephone and a media player and a general purpose computer, all contained within the housing **52**. The portable device **50** may be implemented as an embodiment of the data processing system **203** shown in FIG. **1** and may operate with a device in a manner which is shown in FIG. **1** and is described in the present disclosures. The portable device **50** may have a form factor which is small enough that it fits within the hand of a normal adult and is light enough that it can be carried in one hand by an adult. It will be appreciated that the term "portable" means the device can be easily held in an adult user's hands (one or both); for example, a laptop computer and an iPod are portable devices.

[0056] FIG. **4**B illustrates a data processing system according to one embodiment of the invention. This data processing system of FIG. **4**B may be implemented as an embodiment of the data processing system **203** shown in FIG. **1**. FIG. **4**B shows a wireless device in a telephone configuration having a "candy-bar" style. In FIG. **4**B, the wireless device **30** may include a housing **32**, a display device **34**, an input device **36** which may be an alphanumeric keypad, a speaker **38**, a microphone **40** and an antenna **42** with the antenna **42** being coupled to one or more wireless transceivers (e.g., mobile telephony, Bluetooth, WiFi). The wireless device **30** also may include a proximity sensor **44** and an accelerometer **46**. It will be appreciated that the embodiment of FIG. **4**B may use more or fewer sensors and may have a different form factor from the form factor shown in FIG. **4**B.

[0057] The display device **34** is shown positioned at an upper portion of the housing **32**, and the input device **36** is shown positioned at a lower portion of the housing **32**. The antenna **42** is shown extending from the housing **32** at an upper portion of the housing **32**. The speaker **38** is also shown at an upper portion of the housing **32** above the display device **34**. The microphone **40** is shown at a lower portion of the housing **32**, below the input device **36**. It will be appreciated that the speaker **38** and microphone **40** can be positioned at any location on the housing, but are typically positioned in accordance with a user's ear and mouth, respectively. The proximity sensor **44** is shown at or near the speaker **38** and at least partially within the housing **32**. The accelerometer **46** is shown at a lower portion of the housing **32** and within the housing **32**. It will be appreciated that the particular locations of the above-described features may vary in alternative embodiments.

[0058] The display device **34** may be, for example, a liquid crystal display (LCD) which does not include the ability to accept inputs or a touch input screen which also includes an LCD. The input device **36** may include, for example, buttons, switches, dials, sliders, keys or keypad, navigation pad, touch pad, touch screen, and the like.

[0059] FIGS. **4**C and **4**D illustrate a portable device **70** according to one embodiment of the invention. The portable device **70** may be implemented as an embodiment of the data processing system **203** shown in FIG. **1** and may be a cellular telephone which includes a hinge **87** that couples a display housing **89** to a keypad housing **91**. The hinge **87** allows a user to open and close the cellular telephone so that it can be placed in at least one of two different configurations shown in FIGS. **4**C and **4**D. In one particular embodiment, the hinge **87**

may rotatably couple the display housing to the keypad housing. In particular, a user can open the cellular telephone to place it in the open configuration shown in FIG. **4**C and can close the cellular telephone to place it in the closed configuration shown in FIG. **4**D. The keypad housing **91** may include a keypad **95** which receives inputs (e.g. telephone number inputs or other alphanumeric inputs) from a user and a microphone **97** which receives voice input from the user. The display housing **89** may include, on its interior surface, a display **93** (e.g. an LCD) and a speaker **98** and a proximity sensor **84**; on its exterior surface, the display housing **89** may include a speaker **96**, a temperature sensor **94**, a display **88** (e.g. another LCD), an ambient light sensor **92**, and a proximity sensor **84**A.

[0060] In at least certain embodiments, the portable device **70** may contain components which provide one or more of the functions of a wireless communication device such as a cellular telephone, a media player, an entertainment system, a PDA, or other types of devices described herein. In one implementation of an embodiment, the portable device **70** may be a cellular telephone integrated with a media player which plays MP3 files, such as MP3 music files.

[0061] Each of the devices shown in FIGS. **4**A, **4**B, **4**C and **4**D may be a wireless communication device, such as a wireless cellular telephone, and may include a plurality of components which provide a capability for wireless communication. FIG. **5** shows an embodiment of a wireless device **100** which includes the capability for wireless communication. The wireless device **100** may be included in any one of the devices shown in FIGS. **4**A, **4**B, **4**C and **4**D, although alternative embodiments of those devices of FIGS. **4**A, **4**B, **4**C and **4**D may include more or fewer components than the wireless device **100**. Furthermore, all or portions of wireless device **100** may be implemented as part of data processing system **203**, and wireless device **100** may operate with a device in a manner which is described in the present disclosures.

[0062] Wireless device **100** may include an antenna system **101**. Wireless device **100** may also include digital and/or analog radio frequency (RF) transceivers **102** (e.g., mobile telephony, Bluetooth, WiFi), coupled to the antenna system **101**, to transmit and/or receive voice, digital data and/or media signals through antenna system **101**.

[0063] Wireless device **100** may also include a digital processing system **103** to control the digital RF transceiver and to manage the voice, digital data and/or media signals. Digital processing system **103** may be a general purpose processing device, such as a microprocessor or controller for example. Digital processing system **103** may also be a special purpose processing device, such as an ASIC (application specific integrated circuit), FPGA (field-programmable gate array) or DSP (digital signal processor). Digital processing system **103** may also include other devices, as are known in the art, to interface with other components of wireless device **1 00**. For example, digital processing system **103** may include analog-to-digital and digital-to-analog converters to interface with other components of wireless device **100**. Digital processing system **103** may include a media processing system **109**, which may also include a general purpose or special purpose processing device to manage media, such as files of audio data.

[0064] Wireless device **100** may also include a storage device **104**, coupled to the digital processing system, to store data and/or operating programs for the wireless device **100**. Storage device **104** may be, for example, any type of solid-state or magnetic memory device.

[0065] Wireless device **100** may also include one or more input devices **105**, coupled to the digital processing system **103**, to accept user inputs (e.g., telephone numbers, names, addresses, media selections, etc.) Input device **105** may be, for example, one or more of a keypad, a touchpad, a touch screen, a pointing device in combination with a display device or similar input device.

[0066] Wireless device **100** may also include at least one display device **106**, coupled to the digital processing system **103**, to display information such as messages, telephone call information, contact information, pictures, movies and/or titles or other indicators of media being selected via the input device **105**. Display device **106** may be, for example, an LCD display device. The display device **106** may include a backlight **106***a* to illuminate the display device **106** under certain circumstances. It will be appreciated that the wireless device **100** may include multiple displays.

[0067] Wireless device **100** may also include a battery **107** to supply operating power to components of the system including digital RF transceiver **102**, digital processing system **103**, storage device **104**, input device **105**, microphone **105**A, audio transducer **108**, media processing system **109**, sensor(s) **110**, and display device **106**. Battery **107** may be, for example, a rechargeable or non-rechargeable lithium or nickel metal hydride battery.

[0068] Wireless device **100** may also include audio transducers **108**, which may include one or more speakers, and at least one microphone **105**A. Wireless device **100** may also include one or more sensors **110** coupled to the digital processing system **103**.

[0069] FIG. **6** relates to another aspect of the disclosures described herein. In this aspect, the data processing system **203** may be considered itself a device relative to another data processing system such as the data processing system **451**. The system **450** shown in FIG. **6** includes the data processing system **451** which includes a network interface and a device interface and storage. In at least certain embodiments, the data processing system **451** may be a general purpose computer system having a keyboard, and a cursor control device, and a display as well as a network interface to couple the data processing system to a network **459** which may be the Internet or other networks, such as a local area network or a telephone network or a cable TV system network. The network interface may connect to the network either through a wired connection or through a wireless connection and there may be a plurality of network interfaces for different networks or different methods of connecting to the same network or a plurality of networks.

[0070] The data processing system typically includes non-volatile mass storage which may store user programs and an operating system and user data including address or contact information, calendar information, and URLs such as favorites or bookmarks for browsing the Internet. The device interface **452** of the data processing system **451** is used to couple the data processing system **451** to a dock or other connector for devices. The dock or other connector **453** may be connected in a wired or wireless manner to the data processing system **451** through the device interface. The dock or connector **453** is designed to connect to one or more devices, such as a first device **457** which may be a wireless headset and a second device **455** which may be a wireless cellular telephone which includes PDA functionality. In one embodiment, the

data processing system **203** may be the second device **455** and the device **201** may be the first device **457**. The dock may mechanically hold both devices separately or at the same time and may also electrically connect to both devices to provide power to the devices, recharge the batteries of the devices, and to exchange data between the devices and the data processing system **451**. The second device **455** may include storage for user information, such as contacts, calendar, and URLs, which may be synchronized with the user's data of a similar type on the data processing system **451**. The user may place one or both devices on the dock or connector **453** to cause certain actions to occur as described herein or may remove one or both devices to also cause certain actions to occur automatically as described herein. The dock and/or devices may include mechanical or electrical sensors to detect the placement of the device on the dock or connector and the removal of the device from the dock or connector.

[0071] In the foregoing specification, the invention has been described with reference to specific exemplary embodiments thereof. It will be evident that various modifications may be made thereto without departing from the broader spirit and scope of the invention as set forth in the following claims. The specification and drawings are, accordingly, to be regarded in an illustrative sense rather than a restrictive sense.

What is claimed is:

1. A method comprising:

establishing a first connection between a first device and a second device with a first networking standard and associated first network;

establishing a second connection between the first device and the second device with a second networking standard and associated second network based on the first connection providing information to at least one of the first and second devices regarding the second network; and

transferring data between the first and second devices using the second networking standard.

2. The method of claim **1**, further comprising:

authenticating the first device and the second device over the first connection using the first networking standard.

3. The method of claim **1**, further comprising:

authenticating the first device and the second device over the second connection using the second networking standard.

4. The method of claim **1**, further comprising:

disconnecting the first connection between the first device and the second device with the first networking standard after establishing a second connection between the first device and the second device.

5. The method of claim **1**, wherein the first networking standard is a Bluetooth networking standard and the second networking standard is a WiFi networking standard.

6. The method of claim **1**, wherein the first network comprises a first wireless local area network and the second network comprises a second wireless local area network.

7. A data processing system, comprising:

a transceiver to detect a wireless signal received from a device transmitting the wireless signal;

a processor coupled to the transceiver, the processor configured to respond to the detected wireless signal by establishing a first connection between the data processing system and the device using a first networking standard and associated first network, wherein the processor is further configured to establish a second connection between the data processing system and the device with a second networking standard and associated second network based on the first connection.

8. The data processing system of claim **7**, wherein the processor is further configured to transfer data between the data processing system and the device using the second networking standard and associated second network.

9. The system of claim **7**, wherein the processor is further configured to determine a proximity between the data processing system and the device based on the transceiver detecting the wireless signal.

10. The system of claim **9**, wherein the processor is further configured to identify a location of the data processing system based on determining the proximity between the data processing system and the device.

11. The system of claim **9**, wherein the processor is further configured to react to the location of the data processing system.

12. A method comprising:

establishing a first connection between a first device and a second device using a first networking standard;

identifying a location of the second device based on establishing the first connection between the first device and the second device; and

reacting to the location of the second device.

13. The method of claim **12**, wherein reacting to the location of the second device comprises changing a device configuration of the second device.

14. The method of claim **13**, wherein changing the device configuration of the second device comprises establishing a second connection between the first device and the second device with a second networking standard having a scaled power setting based on identifying the location of the second device.

15. The method of claim **12**, wherein reacting to the location of the second device comprises automatically transferring data between the first device and the second device using the second connection.

16. The method of claim **13**, wherein changing the device configuration of the second device comprises at least one of the following:

changing email server settings of the second device;

changing a ringer state of the second device;

changing a background setting of the second device;

prohibiting voice calls to or from the second device;

switching from a cellular network for voice calls to a voice over IP network; and

changing a chat status.

17. A machine readable medium storing executable program instructions which when executed cause a data processing system to perform a method comprising:

establishing a first connection between a first device and a second device using a first networking standard;

identifying a location of the second device based on establishing the first connection between the first device and the second device; and

reacting to the location of the second device.

18. The medium of claim **17**, wherein reacting to the location of the second device comprises changing a device configuration of the second device.

19. The medium of claim **18**, wherein changing the device configuration of the second device comprises establishing a second connection between the first device and the second

device with a second networking standard having a scaled power setting based on identifying the location of the second device.

20. The medium of claim **17**, wherein reacting to the location of the second device comprises automatically transferring data between the first device and the second device using the second connection.

21. The medium of claim **18**, wherein changing the device configuration of the second device comprises at least one of the following:

changing email server settings of the first device;

changing a ringer state of the first device;

changing a background setting of the first device;

prohibiting voice calls to or from the first device;

switching from a cellular network for voice calls to a voice over IP network; and

changing a chat status.

22. A machine readable medium storing executable program instructions which when executed cause a data processing system to perform a method comprising:

establishing a first connection between a first device and a second device with a first networking standard and associated first network;

establishing a second connection between the first device and the second device with a second networking standard and associated second network based on the first connection providing information to at least one of the first and second devices regarding the second network; and

transferring data between the first and second devices using the second networking standard.

23. The medium of claim **22**, further comprising:

authenticating the first device and the second device over the first connection using the first networking standard.

24. The medium of claim **23**, further comprising:

authenticating the first device and the second device over the second connection using the second networking standard.

25. The medium of claim **22**, further comprising:

disconnecting the first connection between the first device and the second device with the first networking standard after establishing a second connection between the first device and the second device.

* * * * *