IN THE UNITED STATES DISTRICT COURT
FOR THE EASTERN DISTRICT OF NORTH CAROLINA
WESTERN DIVISION
NO. 5:23-CV-00493-FL

INTERDIGITAL INC., INTERDIGITAL VC HOLDINGS, INC., INTERDIGITAL PATENT HOLDINGS, INC., and INTERDIGITAL MADISON PATENT HOLDINGS SAS, Plaintiffs, v. LENOVO GROUP LIMITED, LENOVO (UNITED STATES) INC., and MOTOROLA MOBILITY LLC, Defendants.	)))))))))))))	PRELIMINARY INVALIDITY CONTENTIONS

DEFENDANTS' PRELIMINARY INVALIDITY CONTENTIONS

Pursuant to the Case Management Order, ECF No. 33, Lenovo (United States) Inc. and Motorola Mobility LLC (collectively, "Lenovo") hereby serve their Preliminary Invalidity Contentions concerning all asserted claims of U.S. Patent Nos. 10,250,877 (the '877 patent), 8,674,859 (the '859 patent), 9,674,556 (the '556 patent), 8,737,933 (the '933 patent), and 9,173,054 (the '054 patent) (collectively, the "Asserted Claims" of the "Asserted Patents") on Plaintiffs InterDigital, Inc., InterDigital VC Holdings, Inc., InterDigital Patent Holdings, Inc., and InterDigital Madison Patent Holdings SAS' (collectively, "InterDigital" or "Plaintiffs"). These contentions set forth Lenovo's Invalidity Contentions with respect to the claims currently asserted by InterDigital.

I. INTRODUCTORY STATEMENT

The Asserted Claims are neither novel nor non-obvious in view of the prior art and the knowledge of a person of ordinary skill in the art ("POSITA") at the time of the alleged inventions.

InterDigital Exhibit 2006, p. 1
Microsoft v. InterDigital
IPR2024-00306

Instead, the Asserted Claims recite media codec (coding and/or decoding) systems, wireless filesharing systems, and methods that were well-known in the field prior to the alleged inventions of the Asserted Patents. The Asserted Claims are also invalid because they fail to claim patent-eligible subject matter under 35 U.S.C. § 101, *Alice Corp. v. CLS Bank Int'l*, 134 S. Ct. 2347, 2354 (2014), and its progeny. Moreover, the Asserted Claims are invalid for indefiniteness, lack of written description, and/or enablement under 35 U.S.C. § 112.

The following contentions are informed by Lenovo's current understanding of the Asserted Claims, including Lenovo's understanding of how InterDigital applied the Asserted Claims in InterDigital's Complaint and infringement claim charts, without the benefit of claim construction and with discovery ongoing. InterDigital's infringement claim charts are deficient in multiple respects and do not provide Lenovo with sufficient information for a complete understanding of the basis for InterDigital's infringement allegations or of InterDigital's construction of the limitations in the Asserted Claims. Additionally, InterDigital's infringement claim charts are deficient at least insofar as they fail to articulate how any single accused product (or its use) infringes each and every element of the asserted claim. Accordingly, these Invalidity Contentions may reflect various potential and alternative positions regarding claim construction and scope. These contentions therefore should not be relied upon as a statement of Lenovo's claim interpretations and should not be relied upon as any admission regarding the proper scope of the Asserted Claims. These Invalidity Contentions should in no way be deemed admissions (1) as to the proper construction or scope of the Asserted Claims, or (2) that any of the Asserted Claims meet the written description, enablement, or definiteness requirements. Nor do these contentions constitute any admission by Lenovo that any accused products or services, including any current or past versions of those products or services, are covered by any Asserted Claim.

Any assertion herein that a particular limitation is disclosed by a prior art reference or references may be based in part on InterDigital's apparent interpretation of one or more claim elements, as identified in InterDigital's Complaint and infringement claim charts, and is not intended to be, and is not, an admission by Lenovo that any such construction is supportable or correct.

To the extent that prior art cited for a particular limitation discloses functionality that is the same or similar in some respects to the alleged functionality in the accused products and/or services as set forth in InterDigital's infringement claim charts, Lenovo do not concede that those limitations are in fact met by those accused functionalities. However, to the extent InterDigital accuses the same or similar functionality as that disclosed in the prior art, Lenovo contend such functionality is evidence of invalidity.

Lenovo further reserves the right to seek to supplement and amend these disclosures based on further investigation, analysis, and discovery, Lenovo's consultation with experts and others, and contentions or rulings on relevant issues such as claim construction and priority dates. Deposing the alleged inventors may reveal information that affects the disclosures and contentions herein. Also, Lenovo has not completed third-party discovery. To the extent Lenovo obtains deposition testimony, additional documentation, or any other evidence concerning prior art references and/or prior art systems during discovery, Lenovo reserves the right to rely on such testimony, documentation, or evidence in expert reports and at any hearing.

Lenovo disputes that the Asserted Patents are entitled to the earliest provisional or non-provisional priority dates on the faces of the patents. Lenovo reserves the right to move to amend these Invalidity Contentions and/or modify their selection of prior art references if InterDigital provides sufficient corroborating evidence to support its priority claim(s). Lenovo also reserves

the right to amend these Invalidity Contentions and/or to modify the selection of prior art references based on InterDigital's service of any supplements of modifications to its infringement contentions.

Because Lenovo is continuing to search for and analyze relevant prior art, Lenovo reserves the right to seek to revise, amend, and/or supplement the information provided herein, including identifying, charting, and/or relying upon additional prior art references, relevant disclosures, and bases for Invalidity Contentions. Additional prior art, disclosures, and invalidity grounds, whether or not cited in this disclosure and whether known or not known to Lenovo, may become relevant as investigation, analysis, and discovery continue. Lenovo is currently unaware of the extent, if any, to which InterDigital will contend that limitations of the Asserted Claims are not disclosed in the prior art. To the extent that such an issue arises, Lenovo reserves the right to identify and rely upon other references or portions of references regarding the allegedly missing limitation(s).

Additionally, Lenovo reserves the right to present additional prior art references and/or disclosures under 35 U.S.C. §§ 102 (a), (b), (e), and/or (g), and/or § 103, located during the course of such discovery or further investigation, and to assert invalidity under 35 U.S.C. §§ 102 (c), (d), or (f), to the extent that such discovery or investigation yields information forming the basis for such invalidity.

Furthermore, to the extent InterDigital asserts the doctrine of equivalents, a "doctrine of equivalents theory cannot be asserted if it will encompass or 'ensnare' the prior art." *Jang v. Boston Sci.*, 872 F.3d 1275, 1285 (Fed. Cir. 2017). To the extent InterDigital asserts the doctrine of equivalents for any of the claimed limitations, it would ensnare the prior art for the reasons, and based on the evidence, discussed below and in the accompanying charts. Lenovo reserves the right

InterDigital Exhibit 2006, p. 4
Microsoft v. InterDigital
IPR2024-00306

to use these disclosures as well as further discovery and disclosures for purposes of non-infringement arguments.

II. IDENTIFICATION OF PRIOR ART

A. *Prior Art Listing*

Subject to Lenovo's reservation of rights, Lenovo identifies each item of prior art that anticipates or renders obvious one or more of the Asserted Claims below. To the extent the prior art produced in this case are not identified as items of prior art that anticipate or render obvious an Asserted Claim below, Lenovo intends to rely, and reserves the right to rely, on these references as background and as evidence of the state of the art at the time of the alleged invention of the Asserted Patents.

Additionally, the prior art references cited by Lenovo include references that are related patent applications and issued patents that contain substantially the same subject matter (*e.g.*, published U.S. patent applications, issued U.S. Patents, foreign applications, or issued foreign patents). Any citation to or quotation from any of these patent applications or patents, therefore, should be understood as encompassing any parallel citation to the same subject matter in other related or corresponding applications or patents. For example, where a claim chart cites a published patent application that ultimately issued as a patent with substantially the same written description, Lenovo may rely upon the published patent application and/or the issued patent as prior art.

Lenovo also reserves the right to later rely upon all references or portions of references discussed herein to supplement or amend the disclosures contained herein. Also, to the extent not expressly mentioned herein, Lenovo incorporates by reference (1) any and all prior art contained or identified in documents produced by InterDigital to Lenovo; (2) any and all additional materials regarding or bearing upon invalidity in InterDigital's or any third party's possession or control that

have not been produced to date, to the extent that any exist; and (3) and prior art of which any named inventor of the Asserted Patent is aware and/or on which they contend the alleged invention of the Asserted Patents build or improve. Lenovo may also rely upon the disclosures of the references cited and/or discussed during the prosecution of the Asserted Patents and/or the assertions presented regarding those references.

Each disclosed item of prior art is evidence of a prior invention and making of the invention in the United States by another under 35 U.S.C. § 102 (g), as evidenced by the named inventor(s), author(s), organization(s), and publisher(s) involved with each such reference, with the circumstances described and reflected in each reference including publications and system implementation references. Lenovo further intends to rely on admissions of the named inventors concerning the prior art, including statements found in the Asserted Patents, their prosecution histories, related patents, and/or patent applications, any deposition testimony, and any papers filed by, or evidence submitted by, InterDigital in conjunction with this Investigation. For systems and products that are disclosed, Lenovo also intends to rely on additional information describing those same systems and products, including information received from third parties in response to subpoenas.

1. ’877 Patent

a) Issued Patents and Published Applications

Issuing Country	Number	Filing Date	Issue/Publication Date	First Named Inventor
United States	2008/0089417	October 9, 2007	April 17, 2008	Yiliang Bao
United States	2010/0226437	March 6, 2009	September 9, 2010	Mark A. Robertson
United States	6,510,178	December 15, 1999	January 21, 2003	Mark Fimoff

InterDigital Exhibit 2006, p. 6
Microsoft v. InterDigital
IPR2024-00306

Issuing Country	Number	Filing Date	Issue/Publication Date	First Named Inventor
United States	6,628,714	December 15, 1999	September 30, 2003	Mark Fimoff
United States	8,493,513	May 6, 2011	July 23, 2013	Gary J. Sullivan
United States	2008/0232452	March 20, 2007	September 25, 2008	Gary J. Sullivan
WIPO	2011/128272	April 8, 2011	December 15, 2011	Haricharan Lakshman
WIPO	1990/000780	July 12, 1989	January 25, 1990	Enrico Dolazza

2. '859 Patent

a) Issued Patents and Published Applications

Issuing Country	Number	Filing Date	Issue/Publication Date	First Named Inventor
United States	2008/0310507	June 4, 2008	December 18, 2008	Yan Ye
United States	7,777,654	August 11, 2008	April 16, 2009	Yuan-Teng Chang
United States	5,880,688	April 9, 1997	March 9, 1999	Robert A. Rust
United States	7,443,318	March 30, 2007	October 2, 2008	Chun Kit Hung
United States	2010/0128995	January 16, 2009	May 27, 2010	Virginie Drugeon
United States	5,870,036	February 24, 1995	February 9, 1999	Peter Anthony Franaszek
United States	2007/0030180	August 3, 2006	February 8, 2007	Kai Yang
United States	5,045,852	March 30, 1990	September 3, 1991	Joan L. Mitchell
WIPO	2004/100556	May 7, 2004	February 10, 2005	Davies

b) Prior Art Publications

Title	Date	Author(s)	Page Numbers
Context-based adaptive binary arithmetic coding	July 2003	Detlev Marpe, Heiko Schwarz, and Thomas Wiegand	1-17

in the H. 264/AVC video compression standard			
Hardware co-processors for real-time and high-quality H. 264/avc video coding	September 4, 2006	Martina, Maurizio, Guido Masera, Luca Fanucci, and Sergio Saponara	1-5
Overview: VP7 Data Format and Decoder	March 28, 2005	On2 Technologies, Inc.	1-65

3. ’556 Patent

a) Issued Patents and Published Applications

Issuing Country	Number	Filing Date	Issue/Publication Date	First Named Inventor
United States	2006/0110062	November 23, 2004	May 25, 2006	Patricia Chiang
United States	2003/0219073	April 3, 2003	November 27, 2003	Yung-lyul Lee
United States	2006/0008013	July 8, 2004	January 12, 2006	Oskar Pelc
United States	6,360,024	July 6, 2000	March 19, 2002	Thiow Keng Tan
United States	2006/0029282	August 8, 2005	February 9, 2006	George William Meeker
United States	2005/0094893	October 29, 2003	May 5, 2005	Ramin Samadani
United States	2003/0152146	December 17, 2002	August 14, 2003	Chih-Lung Lin

b) Prior Art Publications

Title	Date	Author(s)	Page Numbers
VC-1 Compressed Video Bitstream Format Decoding Process SMPTE 421M-2006	February 24, 2006	The Society of Motion Picture and Television Engineers (SMPTE)	i–473
ITU-T Rec. H-264 Infrastructure of Audiovisual Services – Coding of Moving Video	March 1, 2005	Telecommunication Standardization Sector of International Telecommunication Union (ITU-T)	i–324

InterDigital Exhibit 2006, p. 8
Microsoft v. InterDigital
IPR2024-00306

A Nonlinear Loop Filter for Quantization Noise Removal in Hybrid Video Compression	November 14, 2005	Guleryuz	1-4

4. ’933 and ’054 Patents

a) Issued Patents and Published Applications

Issuing Country	Number	Filing Date	Issue/Publication Date	First Named Inventor
United States	2009/0298419	May 28, 2008	December 3, 2009	Deepak Ahya
United States	2008/0166967	May 18, 2007	July 10, 2008	Christopher D. McKillop
United States	2007/0011335	Jul. 7, 2006	Jan. 11, 2007	Gregory Burns
United States	2007/0191028	August 29, 2006	August 16, 2007	Ken Hinckley
Japan	2004-112225	Sept. 17, 2002	April 8, 2004	Taiga Asano
WIPO	2005/107285	March 30, 2004	November 10, 2005	Peter J. Hoddie
United States	2011/0083111	Oct. 14, 2009	Apr. 7, 2011	Babak Forutanpour
United Kingdom	2,439,364	June 19, 2006	Dec. 27, 2007	John Turner
United States	7,102,640	Mar. 21, 2002	Sept. 5, 2006	Markus Aholainen
WIPO	2006/092505	Mar. 1, 2006	Sept. 8, 2006	Olivier Samy Chouraki
United States	2003/0018744	Feb. 7, 2001	Jan. 23, 2003	James Johanson

b) Prior Art Publications

Title	Date	Author(s)	Page Numbers
Infrared Data Association® (IrDA®) Object Exchange Protocol OBEX™	January 3, 2003	Pat Megowan, Dave Suvak, Doug Kogan	1-95
Exploring Bluetooth based Mobile Phone Interaction	September 19, 2005	Keith Cheverst, Alan Dix, Daniel Fitton, Chris Kray, Mark Rouncefield,	47-54

with the Hermes Photo Display		Corina Sas, George Saslis-Lagoudakis, Jennifer G. Sheridan	
Wireless ad hoc networking—The art of networking without a network	2000	Magnus Frodigh, Per Johansson, Peter Larsson	248-263

B. *System Prior Art*

Lenovo identifies the following references as related to, partially describing, and/or evidence of certain prior art systems:

’933 and ’054 Patents

System	Relevant Dates	Citation
Hewlett Packard Company iPAQ Pocket PC H5555 (“HP H5555”)[1]	August 2003	LENOVO_1373-00145497-LENOVO_1373-00145499
Sony CLIÉ Personal Entertainment Organizer PEG-UX50/U (“Sony PEG-UX50”)[2]	September 2003	LENOVO_1373-00145494-LENOVO_1373-00145496
Apple AirDrop[3]	June 20, 2011[4]	IDG1373_0001373-IDG1373_0001418
BlueRendezvous System[5]	January 2006	
System as described in Frodigh et al., *Wireless ad hoc networking—The art of networking without a network*, Ericsson Review No. 4 (“Frodigh System”)[6]	2000	LENOVO_1373-00142291-LENOVO_1373-00142306
Bluetooth Core Specification Version 3.0 High Speed (“Bluetooth 3.0 HS”) System[7]	April 22, 2009	

[1] Exhibit D-04 is a claim chart detailing the operation of HP H5555. On information and belief, the operation described therein is exemplary of all products with Microsoft Windows Pocket PC 2003 operating system version 4.20.1081 (Build 13100) and later versions. To the extent the following parties will not agree to cross-use of the material produced in the companion ITC Investigation, Lenovo reserves the right to serve a subpoenas to HP Inc., Hewlett Packard Enterprise Company, and Microsoft Corporation relating to various aspects of HP H5555 and its operating system. Lenovo therefore reserves the right to revise, amend and/or supplement this cover pleading and the claim chart based on information obtained from the subpoenas, if needed.

[2] Exhibit D-05 is a claim chart detailing the operation of Sony PEG-UX50. On information and belief, the operation described therein is exemplary of all products with Palm OS 5 (Version 5.2) and later versions. To the extent the following third-parties do not agree to cross-use of material produced in the ITC, Lenovo reserves the right to serve a subpoenas to HP Inc., Hewlett Packard Enterprise Company, and Sony Electronics Inc. relating to various aspects of the Sony PEG-UX50 and its operating system. Lenovo therefore reserves the right to revise, amend and/or supplement this cover pleading and the claim chart based on information obtained from the subpoenas.

[3] To the extent Apple Inc. does not agree to cross-use of material produced in the ITC, Lenovo reserves the right to serve a subpoena to Apple Inc. relating to various aspects of the AirDrop and the operating system implementing the same. Lenovo therefore reserves the right to revise, amend and/or supplement this cover pleading and the claim chart based on information obtained from the subpoena.

[4] As discussed in the § III.D regarding Priority and § V.1 regarding Written Description, the specifications of the ’054 and ’933 patents do not describe detecting nearby devices using

InterDigital Exhibit 2006, p. 11
Microsoft v. InterDigital
IPR2024-00306

Fact discovery is ongoing, and Lenovo has not completed their investigation into, search for, and analysis of relevant prior art systems. Lenovo therefore reserves the right to revise, amend, and/or supplement the information provided herein, including identifying, charting, and relying on additional prior art systems, should Lenovo's continued investigation, search, and analysis yield additional relevant information. Lenovo reserves the right to present additional items of prior art, including prior art systems, under 35 U.S.C. §§ 102 and/or 103 located during the course of such discovery or further investigation and to assert contentions of invalidity under, for instance, (pre-AIA) 35 U.S.C. § 102 (c), (d), or (f) to the extent that such discovery or investigation yield information forming the basis for such contentions of invalidity. This includes, for instance, the issuance of subpoenas to third parties believed to have knowledge, documentation, and/or

---

Bluetooth and transferring a media using WiFi. As a result, because Apple's AirDrop predates the filing of the '054 and '933 patents, it is prior art to the '054 and '933 patents.

[5] On information and belief, BlueRendezvous system, described in part at https://www.microsoft.com/en-us/research/wp-content/uploads/2016/11/BlueRendezvous-Unpublished-Manuscript-2006.pdf, is prior art. Lenovo will be issuing a subpoena to Microsoft Corporation relating to the BlueRendezvous system. Lenovo therefore reserves the right to revise, amend and/or supplement this cover pleading and the claim charts based on information obtained from the subpoena.

[6] On information and belief, Frodigh System, described in part at Frodigh et al., *Wireless ad hoc networking—The art of networking without a network*, Ericsson Review No. 4 (LENOVO_1373-00142291-LENOVO_1373-00142306), is prior art. Lenovo will be issuing a subpoena to Telefonaktiebolaget LM Ericsson, Ericsson Inc., and/or subsidiaries thereof relating to the Frodigh System. Lenovo therefore reserves the right to revise, amend and/or supplement this cover pleading and the claim charts based on information obtained from the subpoena.

[7] Contemporaneous documentation shows Bluetooth 3.0 HS was released on or about April 22, 2009. *See* https://web.archive.org/web/20090424183701/http://bluetooth.com/Bluetooth/Press/SIG/iBLUETOOTHi_TECHNOLOGY_GETS_FASTER_WITH_iBLUETOOTHi_30.htm; https://www.bluetooth.com/specifications/specs/core-specification-3-0-hs/. As detailed in § III.D, the '933 and '054 patents are not entitled to claim priority to December 23, 2008, because provisional application No. 61/140,126 lacks written description for the claims in the patents. Therefore, Bluetooth 3.0 HS is prior art to the '933 and '054 patents. Lenovo will be issuing a subpoena to Bluetooth SIG relating to Bluetooth 3.0 HS and systems implementing the same. Lenovo therefore reserves the right to revise, amend and/or supplement this cover pleading.

corroborating evidence concerning some of the prior art cited herein, including but not limited to prior art systems (including prior art systems relating to or implementing the prior art cited herein), and/or additional or superior prior art. These third parties may include, without limitation, any relevant authors, inventors, developers, designers, corporate entities with knowledge, or assignees.

III. PRIORITY

A. *The '877 Patent*

The '877 patent purports to claim priority to French Patent Application No. 1250334, filed on January 13, 2013. InterDigital asserts a priority date of December 6, 2011, the date by which the purported inventors allegedly conceived the claimed invention, and which the inventors then allegedly diligently reduced to practice by January 13, 2012. *See* InterDigital's Disclosure of Asserted Claims and Infringement Contentions "Infringement Contentions" at 8-9. InterDigital, however, has not provided any evidence or explanation to support their claim to priority.

B. *The '859 Patent*

The '859 patent purports to claim priority to French Patent Application No. 0954483, filed on July 1, 2009. InterDigital asserts a priority date of May 20, 2009, the date by which the purported inventors allegedly conceived the claimed invention, and which the inventors then allegedly diligently reduced to practice by July 1, 2009. *See* InterDigital's Preliminary Infringement Contentions at 9. InterDigital, however, has not provided any evidence or explanation to support their claim to priority.

C. *The '556 Patent*

The '556 patent purports to claim priority to provisional application US60/864917 (the '917 application), filed on November 8, 2006. *See* InterDigital's Infringement Contentions at 9. InterDigital asserts a priority date of June 15, 2006, the date by which the purported inventors

allegedly conceived the claimed invention, and which the inventors then allegedly diligently reduced to practice by August 15, 2006. *See* InterDigital's Preliminary Infringement Contentions at 9. InterDigital, however, has not provided any evidence or explanation to support their claim to priority.

In order for a patent to gain the benefit of the filing date of an earlier application, "each application in the chain leading back to the earlier application must comply with the written description requirement of 35 U.S.C. 112." *Zenon Environmental, Inc. v. U.S. Filter Corp.*, 506 F.3d 1370, 1378 (Fed. Cir. 2007); *Lockwood v. Am. Airlines, Inc.*, 107 F.3d 1565, 1571 (Fed. Cir. 1997). "[T]he test requires an objective inquiry into the four corners of the specification from the perspective of a person of ordinary skill in the art." *Ariad Pharms. v. Eli Lilly & Co.*, 598 F.3d 1336, 1351 (Fed. Cir. 2012) (en banc). As such, "a description that merely renders the invention obvious does not satisfy the requirement." *Id.* at 1352.

The '556 patent is not entitled to claim priority to the '917 application, because the '917 application lacks written description for the claims in the patents. Specifically, the '917 application does not contain any description of selectively enabling or disabling the adaptive sparse de-noising filter **at a macroblock level**. The asserted claims of the '556 patent require these elements. For example, the '556 patent recites "wherein the adaptive sparse de-noising filter is selectively enabled or disabled at a given level, the given level being at least a macroblock level. . . ." The claim 1 and claim 5, reads as follows:

> 1. A method comprising:
>
> decoding an image region,
>
> wherein the decoding includes performing in-loop filtering to reduce at least a first and a second type of coding artifact using at least two filters in succession,

> the at least two filters including a deblocking filter for performing a first pass to reduce blocking artifacts
>
> and an adaptive sparse de-noising filter for performing a second pass to reduce noise,
>
> wherein the adaptive sparse de-noising filter is selectively enabled or disabled at a given level, **the given level being at least a macroblock level,** a slice level, a picture level or a sequence level.

'556 patent, at cl. 1 (emphasis added). The bolded limitations above require "the adaptive sparse de-noising filter is selectively enabled or disabled at a given level, the given level being at least a macroblock level. . . ."

> 1. An apparatus comprising at least a memory and one or more processors, the one or more processors being configured to:
>
> decode an image region,
>
> the one or more processors including at least two filters for successively performing in-loop filtering to reduce at least a first and a second type of coding artifact,
>
> the at least two filters including a deblocking filter for performing a first pass to reduce blocking artifacts and an adaptive sparse de-noising filter for performing a second pass to reduce noise,
>
> wherein the adaptive sparse de-noising filter is selectively enabled or disabled at a given level, **the given level being at least a macroblock level**, a slice level, a picture level or a sequence level.

The '917 application lacks any disclosure of this element. The '917 application does not contain the phrase "macroblock level," nor any variation of this phrase that would reasonably convey to a person of skill in the art that the inventor was in possession of the element. Instead, the '917 application is limited to describing "enable or disable information for a filter can be signaled by the encoder using some high level syntax **at slice, picture and/or sequence level,**" but not at the macroblock level.

D. *The '933 and '054 Patents*

The '933 and '054 patents purport to claim priority to application No. 61/140,126 ("'126 provisional application"), filed on December 23, 2008. *See* InterDigital's Preliminary Infringement Contentions at 9-10.

In order for a patent to gain the benefit of the filing date of an earlier application, "each application in the chain leading back to the earlier application must comply with the written description requirement of 35 U.S.C. 112." *Zenon Environmental, Inc. v. U.S. Filter Corp.*, 506 F.3d 1370, 1378 (Fed. Cir. 2007); *Lockwood v. Am. Airlines, Inc.*, 107 F.3d 1565, 1571 (Fed. Cir. 1997). "[T]he test requires an objective inquiry into the four corners of the specification from the perspective of a person of ordinary skill in the art." *Ariad Pharms. v. Eli Lilly & Co.*, 598 F.3d 1336, 1351 (Fed. Cir. 2012) (en banc). As such, "a description that merely renders the invention obvious does not satisfy the requirement." *Id.* at 1352.

The '933 and '054 patents are not entitled to claim priority to December 23, 2008, because application No. 61/140,126 lacks written description for the claims in the patents. ***First***, application No. 61/140,126 does not contain any description of detecting one or more WTRUs using Bluetooth, and transferring a selected media using a WiFi communication. The asserted claims of the '933 and '054 patents require these elements. For example, the '933 and '054 patents recite, respectively, "detecting, by the WTRU using Bluetooth" / "detecting, by the WTRU over bluetooth" and "transferring, by the WTRU using a WiFi communication" / "transferring, by the WTRU to the selected another WTRU over WiFi." Representative Claim 1 recites as follows:

> **1. A method performed by a wireless transmit/receive unit (WTRU), the method comprising:**
>
> processing, by the WTRU, a touchscreen input to select a media element;

> **detecting, by the WTRU using Bluetooth, a plurality of WTRUs in proximity to the WTRU;**
>
> processing, by the WTRU, another touchscreen input to select a WTRU of the plurality of WTRUs;
>
> sending, by the WTRU, a message to transfer the selected media element to the selected WTRU;
>
> receiving, by the WTRU, an acceptance to transfer the selected media element to the selected WTRU; and
>
> **transferring, by the WTRU using a WiFi communication, the selected media element to the selected WTRU.**

'933 patent, 10:53-67 (emphasis added). The bolded limitations above require "detecting . . . using WiFi" and "transferring . . . using a WiFi communication."

The priority application lacks any disclosure of these combination of elements. The priority application does not describe or suggest that the Bluetooth protocol be used for the discovery, but then a WiFi communication be used for the transfer. All the priority application discloses regarding these elements is that the "communication peripherals of the WTRUs may implements technologies such as . . . Bluetooth, . . . or WiFi/WLAN (IEEE 802.11x) in ad-hoc mode." '126 provisional application at [0021]; *see also id.* at [0019], cl. 33. Such generic disclosure of various communication technologies does not reasonably convey to a person of skill in the art that the inventor was in possession of the ordered combination of discovery using Bluetooth and transfer using WiFi.

In fact, the priority application lacks any disclosure of using Bluetooth to detect other WTRUs. Instead, the priority application merely discloses that an "application may solicit information from the communication peripheral about the active devices in the local environment." *Id.* at [0023]. Such generic disclosure of soliciting information about other devices does not

InterDigital Exhibit 2006, p. 17
Microsoft v. InterDigital
IPR2024-00306

reasonably convey to a person of skill in the art that the inventor was in possession of discovery using Bluetooth.

The ’933 and ’054 patents further purport to claim the benefit of the non-provisional application 12/644,948 (“’948 application”), filed on Dec. 22, 2009, which in turn claims priority to the ’126 provisional application. However, for reasons described in § V.D.1 detailing the lack of written description of the asserted claims of the ’933 and ’054 patents, which is incorporated here by reference, the asserted claims of the ’933 and ’054 patents are not entitled to the Dec. 22, 2009 filing date of the ’948 application. In fact, the claims of the ’933 and ’054 patents are improper new matter added in violation of the 35 U.S.C. § 112, ¶ 1 or § 112 (a). Furthermore, the effective filing dates of the asserted claims of the ’933 and ’054 patents, to the extent such date can be accorded (which would be improper), is the date those claims were added to the respective applications that issued as those patents. Specifically, in a 11/19/2013 response to non-final office action for the ’933 patent application, all previously filed claims were canceled and an entirely new set of claims 21-64 were added:

Amendments to the Claims:

This listing of claims will replace all prior versions, and listings, of claims in the application:

1.-20. (CANCELED)

21. (NEW) A method performed by a wireless transmit/receive unit (WTRU), the method comprising:

processing, by the WTRU, a touchscreen input to select a media element;

detecting, by the WTRU using Bluetooth, a plurality of WTRUs in proximity to the WTRU;

processing, by the WTRU, another touchscreen input to select a WTRU of the plurality of WTRUs;

sending, by the WTRU, a message to transfer the selected media element to the selected WTRU;

receiving, by the WTRU, an acceptance to transfer the selected media element to the selected WTRU; and

transferring, by the WTRU using a WiFi communication, the selected media element to the selected WTRU.

INTERDIGITAL_APP_0006693 (IDG1373_0014392) at INTERDIGITAL_APP_0006787-0006796 (IDG1373_0014486-0014495). This is the very first instance where the combination of detecting using Bluetooth and transferring using WiFi appears in the ’933 and ’054 patent family. As such, the claims of the ’933 patent is not entitled to a filing date earlier than 11/19/2013 when they were added to the ’933 patent application for the first time.

For the ’054 patent, ’054 patent application was filed on 04/11/2014 with new set of claims 1-44, which again introduced the combination of detecting using Bluetooth and transferring using WiFi.

IPH-2-2235US05

CLAIMS

What is claimed is:

1. A method performed by a wireless transmit/receive unit (WTRU), the method comprising:

processing, by the WTRU from a multi-touch display, a first input to select media in a mobile application;

detecting, by the WTRU over Bluetooth, a plurality of WTRUs;

processing, by the WTRU, a second input from the multi-touch display to select a target WTRU from the plurality of WTRUs;

sending, by the WTRU to the selected target WTRU, a message to transfer the selected media;

receiving, by the WTRU, an acceptance to transfer the selected media; and

transferring, by the WTRU to the selected target WTRU over WiFi, the selected media.

INTERDIGITAL_APP_0007359 (IDG1373_0000617) at INTERDIGITAL_APP_0007387-7395 (IDG1373_0000645-0000653). As such, the claims of the ’054 patent is not entitled to a filing date earlier than 04/11/2014 when they were added to the ’054 patent application for the first time.

As a result, the claims do not antedate Apple’s AirDrop, which InterDigital alleges to be the basis of their technical domestic industry in the companion ITC Investigation. Notably, Apple’s AirDrop predate the filing of the applications for the ’054 and ’933 patents. Therefore, to the extent Apple’s AirDrop can be used to satisfy technical domestic industry for the ’054 and ’933 patents in the companion ITC Investigation, Apple’s AirDrop is invalidating prior art based on InterDigital’s own contentions in companion ITC Investigation. *See Schering Corp. v. Geneva Pharm.*, 339 F.3d 1373, 1379 (Fed. Cir. 2003) (“[T]hat which would literally infringe if later in time anticipates if earlier.”).

IV. ANTICIPATION AND OBVIOUSNESS UNDER 35 USC §§ 102, 103

A. *Claim Charts for Prior Art References*

Lenovo identify in the attached Prior Art Invalidity Charts (attached hereto as **Exhibits A-01–A-06, B-01–B-12**, **C-01–C-06**, and **D-01–D-07** prior art references that anticipate the Asserted Claims under at least 35 U.S.C. §§ 102 (a), (b), (e), and/or (g), either expressly or inherently, and/or render obvious the Asserted Claims under 35 U.S.C. § 103 either alone or in combination with other references. A list of **Exhibits A-01–A-06, B-01–B-10**, **C-01–C-06**, and **D-01–D-07**, is provided in **Appendix 1**. As shown in the attached charts, and in the analysis below, each Asserted Claim is anticipated by, and/or obvious in view of, one or more items of prior art identified in these disclosures, alone or in combination. Tables identifying ways in which the prior art references cited herein anticipate and/or render obvious the Asserted Claims are provided below. In addition to the attached charts, additional prior art that may be used for obviousness combinations is identified throughout these Preliminary Invalidity Contentions.

As a general matter, all portions of each prior art item are relied upon to support the disclosure of each patent claim limitation, as all portions provide general support. Supporting citations are nevertheless provided, but do not necessarily represent every location where a particular claim term may be found in the prior art item. Any reference to a figure in cited text incorporates by reference that figure itself, and any citation to a figure incorporates by reference any description of that figure in a reference. Identified in the attached claim charts and below are exemplary portions of the references based on presently available information and InterDigital's current allegations. The references, however, may contain additional support for particular claim limitations. Lenovo expressly reserves the right to rely on additional or different portions of the prior art items other than those specifically cited in these claim charts and/or below, other documents subject to discovery, and its expert reports to provide context and/or to aid in

InterDigital Exhibit 2006, p. 21
Microsoft v. InterDigital
IPR2024-00306

understanding the cited portions of the references. Lenovo additionally reserves the right to supplement and/or amend these charts.

As noted above, these claim charts are based on Lenovo's understanding of the claim constructions applied by InterDigital, even though Lenovo do not necessarily agree with those constructions and reserves the right to dispute them. To the extent certain claim elements are indefinite under 35 U.S.C. § 112(2), as identified and described herein, the claim charts attempt to apply the prior art to the extent Lenovo can understand the claim constructions applied by InterDigital as found in InterDigital's infringement claim charts. By doing so, however, Lenovo do not concede that these claim elements are definite or that one of skill in the art would have been informed with reasonable certainty about the scope of the claim element under *Nautilus Inc. v. Biosig Instrument, Inc.*, 134 S. Ct. 2120 (2014). To the extent any limitation is deemed not to be met exactly by an item of prior art, Lenovo contends that the difference would have been obvious to a person of ordinary skill in the art/or and within the knowledge of one skilled in the art at the time of the alleged invention, so that the claimed invention would have been obvious both in light of the single reference alone and/or in light of combined references. Lenovo does not admit or concede that such element is not expressly or inherently disclosed by the reference at issue.

B. *Anticipation, Obviousness, and the State of the Art*

Much of the art identified in the attached exhibits/charts reflects common knowledge and the state of the art at the time of the alleged priority date of the Asserted Patents. Lenovo may rely on additional citations, references, expert testimony, and other material to provide context or to aid in understanding the cited portions of the references and/or cited features of the systems. Lenovo may also rely on expert testimony explaining relevant portions of references, relevant hardware or software products or systems, and other discovery regarding these subject matters.

Additionally, Lenovo may rely on other portions of any prior art reference for purposes of explaining the background, state of the art and general technical subject area of the reference.

Where an individual reference is cited with respect to all elements of an Asserted Claim, Lenovo contends that the reference anticipates the claim under 35 U.S.C. §§ 102 (a), (b), (e), and/or (g) and also renders obvious the claim under 35 U.S.C. § 103, both by itself in view of the knowledge of a person of ordinary skill in the art and in combination with the other cited references to the extent the reference is not found to disclose one or more claim elements. A single prior art reference, for example, can establish obviousness where the differences between the disclosures within the reference and the claimed invention would have been obvious to one of ordinary skill in the art: "Combining two embodiments disclosed adjacent to each other in a prior art patent does not require a leap of inventiveness." *Boston Sci. Scimed, Inc. v. Cordis Corp.*, 554 F.3d 982, 991 (Fed. Cir. 2009). To the extent InterDigital contends that an embodiment within a particular item of prior art does not fully disclose all limitations of a claim, Lenovo accordingly reserves the right to rely on other embodiments in that prior art reference, or other information, to show single reference obviousness under 35 U.S.C. § 103 (a).

To the extent any limitation is deemed not to be met exactly by an item of prior art, Lenovo contends that the difference would have been obvious to a person of ordinary skill in the art and within the knowledge of one skilled in the art at the time of the alleged invention. Thus, the claimed invention would have been obvious both in light of the single reference alone and/or in light of combined references. Lenovo does not admit or concede that the element is not expressly or inherently disclosed by the reference at issue.

Where an individual reference is cited with respect to fewer than all elements of an Asserted Claim, Lenovo contends that the reference renders obvious the claim under 35 U.S.C. §

103 (a) in view of each other reference and combination of references that discloses the remaining claim element(s). "Under § 103, the scope and content of the prior art are to be determined; differences between the prior art and the claims at issue are to be ascertained; and the level of ordinary skill in the pertinent art resolved. Against this background, the obviousness or non-obviousness of the subject matter is determined." *KSR Int'l Co. v. Teleflex Inc.*, 550 U.S. 398, 406 (2007), quoting *Graham v. John Deere Co. of Kansas City*, 383 U.S. 1, 17 (1966). Exemplary motivations to combine references are discussed below. Lenovo reserves the right to rely upon any references or assertions identified herein in connection with Lenovo's contention that each Asserted Claim is invalid under 35 U.S.C. § 103 and to rely upon expert testimony addressing such references and assertions. The fact that prior art is identified to anticipate the Asserted Claims presents no obstacle in also relying on that reference as a basis for invalidity based on obviousness. It is established that "a rejection for obviousness under § 103 can be based on a reference which happens to anticipate the claimed subject matter." *In re Meyer*, 599 F.2d 1026, 1031 (C.C.P.A. 1979). To the extent any cited prior art item may not fully disclose a limitation of an Asserted Claim or is alleged by InterDigital to lack disclosure of the limitation, such limitation is present and identified in another prior art item as shown in these contentions.

Discovery is in the early stages. Lenovo therefore reserve the right to further streamline and reduce the number of anticipation or obviousness references relied upon with respect to a given Asserted Claim and to exchange or otherwise modify the specific references relied upon for anticipation and within each obviousness combination for each Asserted Claim. Each limitation of the Asserted Claims was well-known to those of ordinary skill in the art before the alleged priority date for the Asserted Patent, as explained in detail throughout these contentions.

InterDigital Exhibit 2006, p. 24
Microsoft v. InterDigital
IPR2024-00306

C. *Obviousness and Motivations to Combine – 35 U.S.C. § 103*

Each prior art reference may be combined with one or more other prior art references (*e.g.*, as described herein and in each of **A-01-A-06, B-01-B-12, C-01-C-06, D-01-D-06, and E-01-E-06,** which identify exemplary combinations of references) to render obvious the Asserted Claims in combination, as explained in more detail below and in the attached claim charts. The disclosures of these references also may be combined with information known to persons skilled in the art at the time of the alleged invention and understood and supplemented in view of the common sense of persons skilled in the art at the time of the alleged invention, including any statements in the intrinsic record of the Asserted Patents and related applications.

For each Asserted Patent, a person of ordinary skill would have been motivated to combine the identified prior art based on the nature of the problem to be solved, the teachings of the prior art, and the knowledge of persons of ordinary skill in the art. The identified prior art references, including portions cited in the attached claim charts, address the same or similar technical issues and suggest the same or similar solutions to those issues as the Asserted Claims. The suggested obviousness combinations described below and in the attached claim charts are not to be construed to suggest that any reference included in the combinations is not anticipatory. Further, to the extent that InterDigital contends that any of the prior art fails to disclose one or more limitations of the Asserted Claims, Lenovo reserves the right to identify other prior art references that, when combined with the prior art, would render the claims obvious despite an allegedly missing limitation. Lenovo will further specify the motivations to combine the prior art, including through reliance on expert testimony, at the appropriate later stage of this lawsuit.

A person of ordinary skill in the art would have been motivated to combine the prior art references for each Asserted Patent (*e.g.*, as identified herein and in **A-01-A-06, B-01-B-10, C-01-**

InterDigital Exhibit 2006, p. 25
Microsoft v. InterDigital
IPR2024-00306

C-06, D-01-D-06, and E-01-E-06, which provide exemplary combinations of references). As the United States Supreme Court held in *KSR International*, "[t]he combination of familiar elements according to the known methods is likely to be obvious when it does not more than yield predictable results." 550 U.S. at 416. The Supreme Court further held:

> [w]hen a work is available in one field of endeavor, design incentives and other market forces can prompt variations of it, either in the same field or a different one. If a person of ordinary skill can implement a predictable variation, § 103 likely bars its patentability. For the same reason, if a technique has been used to improve one device, and a person of ordinary skill in the art would recognize that it would improve similar devices in the same way, using the technique is obvious unless its actual application is beyond his or her skill.

Id. at 417.

The Court has further held that "in many cases a person of ordinary skill will be able to fit the teachings of multiple patents together like pieces of a puzzle." *Id.* at 420. It is sufficient that a combination of elements was "obvious to try":

> When there is a design need or market pressure to solve a problem and there are a finite number of identified, predictable solutions, a person of ordinary skill has good reason to pursue the known options within his or her technical grasp. If this leads to the anticipated success, it is likely the product not of innovation but of ordinary skill and common sense.

Id. at 421. "In that instance the fact that a combination was obvious to try might show that it was obvious under § 103." *Id.* Finally, the Supreme Court recognized that "[g]ranting patent protection to advances that would occur in the ordinary course without real innovation retards progress and may, in the case of patents combining previously known elements, deprive prior inventions of their value or utility." *Id.* at 419. All of the following rationales recognized in *KSR International*

InterDigital Exhibit 2006, p. 26
Microsoft v. InterDigital
IPR2024-00306

support a finding of obviousness with respect to each of the obviousness combinations disclosed herein:

- Combining prior art elements according to known methods to yield predictable results;
- Simple substitution of one known element for another to obtain predictable results;
- Use of a known technique to improve similar devices (methods, or products) in the same way;
- Applying a known technique to a known device (method, or product) ready for improvement to yield predictable results;
- "Obvious to try"—choosing from a finite number of identified, predictable solutions, with a reasonable expectation of success;
- Known work in one field of endeavor may prompt variations of it for use in either the same field or a different one based on design incentives or other market forces if the variations would have been predictable to one of ordinary skill in the art; and
- Some teaching, suggestion, or motivation in the prior art that would have led one of ordinary skill to modify the prior art reference or to combine the prior art reference teachings to arrive at the claimed invention.

Certain of these rationales are discussed more specifically below. The fact that others are not discussed more specifically should not be interpreted as an admission or concession that it does not apply. Rather, the discussion below is preliminary in nature and simply provides more explanation of these specific rationales.

Lenovo further contends that certain prior art identified in these Invalidity Contentions is evidence of simultaneous or near-simultaneous independent invention by others of the alleged invention as recited in one or more of the Asserted Claims. Lenovo reserves the right to rely on the simultaneous or near-simultaneous independent invention by others as further evidence of the obviousness of the Asserted Claims.

Each limitation of the Asserted Claims was well known to those of ordinary skill in the art before the earliest alleged priority date for the Asserted Patents as identified by InterDigital, as

well as before the proper priority date, as detailed below. The elements recited in the Asserted Claims are mere combinations and modifications of these well-known elements. A person of ordinary skill in the art would be able, and motivated, to improve the existing technology in the same or similar manner by combining or modifying the individual elements that were already known in the art to yield predictable results.

Subject to the foregoing, Lenovo identifies the following exemplary reasons that skilled artisans would have combined elements of the prior art to render obvious the Asserted Claims.

1. Motivations identified during prosecution

Lenovo hereby expressly incorporates by reference any statements and reasons set forth by the Examiner or admitted to by the Applicant during prosecution of the Asserted Patents and related patent applications as to why it would have been obvious to modify or combine references to achieve the limitations of the Asserted Claims.

Lenovo further reserves the right to rely on any admissions in the Asserted Patents and in InterDigital's litigations involving any related patent. These admissions may be used as part of any obviousness combination, as part of the motivation to combine, and also to explain the state of the art at the time of the Asserted Patents. Lenovo additionally reserves the right to rely on any admissions by the patentee and/or the named inventors of the Asserted Patents, including in publications published contemporaneously to the Asserted Patents.

2. Combining known elements and/or using known techniques in predictable ways

It would have been obvious to combine known elements from codec prior art with codec prior art references that lack that element, or to use known techniques from the media codec prior art with other prior art references that lack such a technique. The field of video coding and decoding is a predictable space and a person of skill in the art would readily understand that

elements and techniques used in certain media codec prior art references could readily be used in other media codec prior art references to obtain similar advantages and results.

It would have been obvious to combine known elements from wireless filesharing prior art with wireless filesharing prior art references that lack that element, or to use known techniques from the wireless filesharing prior art with other prior art references that lack such a technique. The field of wireless filesharing is a predictable space and a person of skill in the art would readily understand that elements and techniques used in certain wireless filesharing prior art references could readily be used in other wireless filesharing prior art references to obtain similar advantages and results.

3. Finite number of predictable solutions

It would have been obvious to try combining the prior art references identified herein because there were only a finite number of predictable solutions and/or because known work in one field or endeavor prompted variations based on predictable design incentives and/or market forces either in the same field or a different one.

Relatedly, one of ordinary skill in the art would have been motivated to create combinations identified in these contentions using: known methods to yield predictable results; known techniques in the same way; a simple substitution of one known, equivalent element for another to obtain predictable results; and/or teaching, suggestion, or motivation in the prior art generally. Also, market forces in the industry, and the desire to improve features and performance, would motivate the addition of features to systems as they become available, become smaller, become less expensive, become more commonly used, provide better performance, reduce costs, or predictably achieve other clearly desirable results.

4. Inherent motivation to combine

Many of these prior art references cite to, rely upon, incorporate, or describe standard protocols, procedures, methods, systems, and/or designs. A person of ordinary skill in the art would have been motivated to look to these standards for solving known problems in the art.

5. Overlapping authorship, inventorship, or assignees

Certain prior art references have the same prior art author(s) and/or assignee(s), and/or the same prior art author(s) appear on multiple prior art references. A person of ordinary skill in the art would have been motivated to, and considered it obvious to, look at other references by the same author(s) and/or assignee(s).

6. Combinations of references through citations

Numerous prior art references cite to, discuss, or build upon other references. Where one reference cites or discusses another reference, a person of ordinary skill in the art would have been motivated to consider their teachings in combination, as they would have been understood to provide related teachings in a similar field.

7. Combinations of related references

In some instances, multiple prior art publications and/or physical references discuss or address the same or substantially similar underlying system, software, or other project, such as commercial software products and successive versions thereof, or multiple publications discussing the same subject matter. Where multiple references discuss or relate to the same or related underlying projects, systems, or other subject matter, it was obvious to combine the discussions and disclosures of the references as they would be understood to describe features or potential features of the underlying project, system, or subject matter. Similarly, where one reference cites or discusses other references or their teachings, or references have one or more authors in common

and a related area of subject matter, it was obvious to consider the teachings of the references in combination with each other due to the express relationships and commonalities between the references.

8. ’877 Patent

In addition to combinations of references and motivations to combine references identified elsewhere herein, including within claim charts, Lenovo identifies combinations and motivations to combine based on references grouped by subject matter. The particular cited disclosures for each reference addressed in the subsections below constitute additional charts identifying where specifically in each item of prior art certain claim limitations are found. The absence of a particular reference from a group is not an admission or suggestion that the reference does not disclose any particular claim limitations.

The Asserted Claims of the ’877 patent include commonly known video codec steps related to block coding/decoding using a reference block, motion compensation, residue block creation, filtering, and resampling (upsampling/downsampling). A person of skill in the art would have been motivated, and considered it obvious, to use these well-known techniques with the prior art references discussed herein—regardless of whether these techniques were expressly discussed in a given prior art reference. First, the ’877 patent admits that many of the claim limitations—including those related to motion compensation, filtering, and resampling—were well-known in the art. *See, e.g.*, ’877 patent at “2. Prior Art”.

Second, a skilled-artisan would recognize that systems and methods for block coding/decoding using a reference block, motion compensation, residue block creation, filtering, and resampling (upsampling/downsampling) were standard practice. For example, multiple of these steps were depicted in the following images in Bao (as well as described throughout the reference):

InterDigital Exhibit 2006, p. 31
Microsoft v. InterDigital
IPR2024-00306

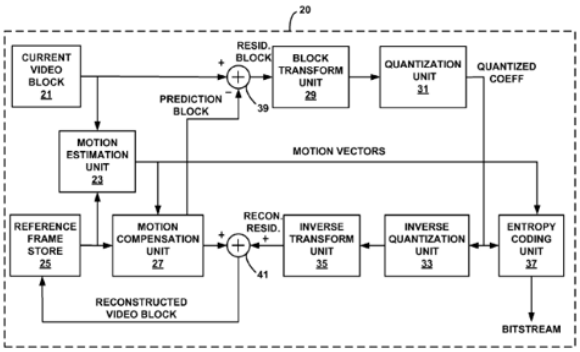

FIG. 2

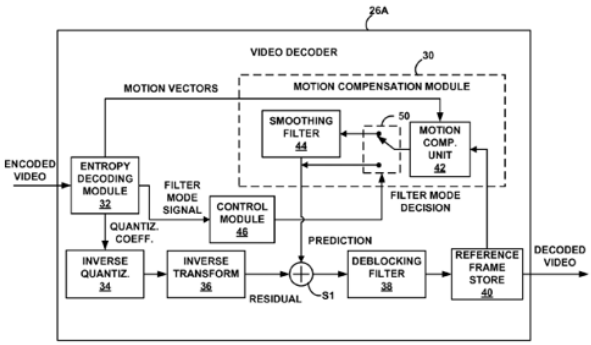

FIG. 4

Bao at Figs. 2, 4; *see also, e.g.*, Bao at Abstract, [0003]-[0004], [0029], [0052], [0054][-0059], [0067]-[0073]. Multiple of these steps also were described in the following exemplary references: Lakshman at Figs. 1-6, 5:35-6:7; Fimoff ’178 at Abstract, Figs. 1-2, 10, 1:20-3:47; Fimoff ’714 at Abstract, Figs. 1-2, 10, 1:20-3:47; Sullivan ’513 at Abstract, Fig. 2-4, 6:44-12:37; Sullivan ’452 at Figs. 2-3, [0005], [00453]-[0078]. Even to the extent not expressly described in a given prior art reference, a person of skill in the art would have considered it obvious to, and been motivated to, use systems and methods that perform these steps given their well-established, well-known, and common nature.

In addition to combinations of references and motivations to combine references identified elsewhere herein, including within claim charts, Lenovo identifies below exemplary combinations and motivations to combine:

- Lakshman in view of Fimoff ’178, Sullivan ’513, Bao, Fimoff ’714, Sullivan ’452, Robertson, Dolazza, and/or the knowledge of a skilled artisan: Each of Fimoff ’178, Sullivan ’513, Fimoff ’714, Sullivan ’452, and Bao are charted separately and the citations in those charts for each limitation are incorporated herein by reference. In addition to the motivations identified above, a POSITA would have had ample reason to combine Lakshman with each of these references for a variety of reasons.

- A POSITA would have been motivated to combine Lakshman, Fimoff '178, Sullivan '513, Bao, Fimoff '714, Sullivan '452, Robertson, and/or Dolazza because they are all directed to systems and methods for coding and/or decoding digital video, including systems and techniques directed to motion compensation and rescaling. *See, e.g.*, Lakshman at Title ("Hybrid video decoder, hybrid video encoder, data stream"); Fimoff '178 at Abstract ("In a reduced memory MPEG decoder, drift caused by the application of ½ pixel resolution motion vectors during prediction filtering is reduced."); Sullivan '513 at Title ("Resampling and picture resizing operations for multi-resolution video coding and decoding"); Bao at Title ("Video coding with adaptive filtering for motion compensated prediction"); Robertson at Title ("Reduced-resolution decoding of AVC bit streams for transcoding or display at lower resolution"); Dolazza at Title ("Apparatus for simultaneously filtering and resampling digital data"); Fimoff '714 at Title ("Down converting MPEG encoded high definition sequences to lower resolution with reduced memory in decoder loop"); Sullivan '452 at [0007] ("Multi-resolution coding allows encoding of video at different spatial resolutions").
- A POSITA would have been motivated to combine Lakshman with these references because they have similar goals related to digital video coding/decoding. Lakshman teaches and describes "[a] hybrid video decoder" systems that "comprises an extractor, a predictor and a reconstructor." Lakshman at Abstract. Lakshman sought as an objective

"to provide a concept for improving the compression efficiency of transmitted information in hybrid video coding [and decoding]." Lakshman at 2:35-3:3. Moreover, Lakshman sought to "significantly reduce a motion compensated prediction error" and therefore improving the balance between rate and distortion in the resulting video signal. *Id.* at 3:29-38. By way of example, Fimoff '178 also had as an objective to reduce error in predicted video frames, noting that "[a] decoder that linearly combines ½ pixel interpolation with other filtering operations can exhibit a drift error towards a darker picture until refreshed by the next I frame. The present invention is arranged to compensate for this drift error." Fimoff '178 at 6:27-34. Similarly, and by way of additional example, Bao had as a goal to "promote prediction accuracy" and/or "to reduce complexity." Bao at [0005]. Each of Sullivan '513, Robertson, and Dolazza have similar disclosures. *See, e.g.*, Sullivan '513 at 3:31-36, 3:49-4:2; Robertson at [0007], 0008]-[0012]; Dolazza at 3:2-28. Because each of these references had the same or similar goals, a POSITA would have been motivated to combine Lakshman with any/all of Fimoff '178, Sullivan '513, Bao, Fimoff '714, Sullivan '452, Robertson, and/or Dolazza to craft a resulting system/method designed to meet those shared goals.

- The resulting combination of Lakshman with Fimoff '178, Sullivan '513, Bao, Fimoff '714, Sullivan '452, Robertson, and/or Dolazza would not require excessive modifications to the systems or methods taught by Lakshman. For example, the techniques, systems, and methods taught by

Fimoff ’178, Sullivan ’513, Bao, Robertson, and/or Dolazza could be implemented via software modifications to Lakshman’s hybrid video encoder/decoder. *See, e.g.*, Lakshman at 35:15-21 (“Depending on certain implementation requirements, embodiments of the invention can be implemented in hardware or in software.”); Sullivan ’513 at 5:38-40 (“The memory 120 stores software 180 implementing a video encoder or decoder with one or more of the described techniques and tools.”); Bao at [0014] (“The techniques described in this disclosure may be implemented in hardware, software, firmware, or any combination thereof.”); Sullivan ’452 at [0239] (“Elements of the described embodiments shown in software may be implemented in hardware and vice versa”). Even to the extent these references do not explicitly note implementation via software, a POSITA would understand and have found it obvious to implement the techniques and methods disclosed therein within the resulting combination. As such, extensive modification of Lakshman would not have been required to achieve the resulting combination.

- Fimoff ’178 in view of Lakshman, Sullivan ’513, Fimoff ’714, Sullivan ’452, Bao, Robertson, Dolazza, and/or the knowledge of a skilled artisan: Each of Lakshman, Sullivan ’513, Fimoff ’714, Sullivan ’452, and Bao are charted separately and the citations in those charts for each limitation are incorporated herein by reference. In addition to the motivations identified above, a POSITA would have had ample reason to combine Fimoff ’178 with each of these references for a variety of reasons.

- As discussed above, a POSITA would have been motivated to combine Lakshman, Fimoff ’178, Sullivan ’513, Bao, Fimoff ’714, Sullivan ’452, Robertson, and/or Dolazza because they are all directed to systems and methods for coding and/or decoding digital video, including systems and techniques directed to motion compensation and rescaling. *See, e.g.*, Lakshman at Title (“Hybrid video decoder, hybrid video encoder, data stream”); Fimoff ’178 at Abstract (“In a reduced memory MPEG decoder, drift caused by the application of ½ pixel resolution motion vectors during prediction filtering is reduced.”); Sullivan ’513 at Title (“Resampling and picture resizing operations for multi-resolution video coding and decoding”); Bao at Title (“Video coding with adaptive filtering for motion compensated prediction”); Robertson at Title (“Reduced-resolution decoding of AVC bit streams for transcoding or display at lower resolution”); Dolazza at Title (“Apparatus for simultaneously filtering and resampling digital data”); Fimoff ’714 at Title (“Down converting MPEG encoded high definition sequences to lower resolution with reduced memory in decoder loop”); Sullivan ’452 at [0007] (“Multi-resolution coding allows encoding of video at different spatial resolutions”).
- As discussed above, a POSITA would have been motivated to combine Fimoff ’178 with these references they have similar goals related to digital video coding/decoding. Because each of these references had the same or similar goals, a POSITA would have been motivated to combine Fimoff ’178 with any/all of Lakshman, Sullivan ’513, Bao, Fimoff ’714, Sullivan

’452, Robertson, and/or Dolazza to craft a resulting system/method designed to meet those shared goals.

- The resulting combination of Fimoff ’178 with Lakshman, Sullivan ’513, Bao, Fimoff ’714, Sullivan ’452, Robertson, and/or Dolazza would not require excessive modifications to the systems or methods taught by Fimoff ’178. For example, the techniques, systems, and methods taught by Lakshman, Sullivan ’513, Bao, Fimoff ’714, Sullivan ’452, Robertson, and/or Dolazza could be implemented via software modifications to Fimoff ’178’s reduced memory MPG decoder. *See, e.g.*, Lakshman at 35:15-21 (“Depending on certain implementation requirements, embodiments of the invention can be implemented in hardware or in software.”); Sullivan ’513 at 5:38-40 (“The memory 120 stores software 180 implementing a video encoder or decoder with one or more of the described techniques and tools.”); Bao at [0014] (“The techniques described in this disclosure may be implemented in hardware, software, firmware, or any combination thereof.”); Sullivan ’452 at [0239] (“Elements of the described embodiments shown in software may be implemented in hardware and vice versa”). Even to the extent these references do not explicitly note implementation via software, a POSITA would understand and have found it obvious to implement the techniques and methods disclosed therein within the resulting combination. As such, extensive modification of Fimoff ’178 would not have been required to achieve the resulting combination.

- Bao in view of Lakshman, Fimoff ’178, Sullivan ’513, Fimoff ’714, Sullivan ’452, Robertson, Dolazza, and/or the knowledge of a skilled artisan: Each of of Lakshman, Fimoff ’178, Fimoff ’714, Sullivan ’452, and Sullivan ’513 are charted separately and the citations in those charts for each limitation are incorporated herein by reference. In addition to the motivations identified above, a POSITA would have had ample reason to combine Bao with each of these references for a variety of reasons.
    - As discussed above, a POSITA would have been motivated to combine Lakshman, Fimoff ’178, Sullivan ’513, Bao, Fimoff ’714, Sullivan ’452, Robertson, and/or Dolazza because they are all directed to systems and methods for coding and/or decoding digital video, including systems and techniques directed to motion compensation and rescaling. *See, e.g.*, Lakshman at Title (“Hybrid video decoder, hybrid video encoder, data stream”); Fimoff ’178 at Abstract (“In a reduced memory MPEG decoder, drift caused by the application of ½ pixel resolution motion vectors during prediction filtering is reduced.”); Sullivan ’513 at Title (“Resampling and picture resizing operations for multi-resolution video coding and decoding”); Bao at Title (“Video coding with adaptive filtering for motion compensated prediction”); Robertson at Title (“Reduced-resolution decoding of AVC bit streams for transcoding or display at lower resolution”); Dolazza at Title (“Apparatus for simultaneously filtering and resampling digital data”); Fimoff ’714 at Title (“Down converting MPEG encoded high definition sequences to lower resolution with reduced

memory in decoder loop"); Sullivan '452 at [0007] ("Multi-resolution coding allows encoding of video at different spatial resolutions").

- As discussed above, a POSITA would have been motivated to combine Bao with these references they have similar goals related to digital video coding/decoding. Because each of these references had the same or similar goals, a POSITA would have been motivated to combine Bao with any/all of Lakshman, Sullivan '513, Fimoff '178, Fimoff '714, Sullivan '452, Robertson, and/or Dolazza to craft a resulting system/method designed to meet those shared goals.
- The resulting combination of Bao with Lakshman, Sullivan '513, Fimoff '178, Fimoff '714, Sullivan '452, Robertson, and/or Dolazza would not require excessive modifications to the systems or methods taught by Bao. For example, the techniques, systems, and methods taught by Lakshman, Sullivan '513, Fimoff '178, Fimoff '714, Sullivan '452, Robertson, and/or Dolazza could be implemented via software modifications to Bao's adaptive filtering coder/decoder. *See, e.g.*, Lakshman at 35:15-21 ("Depending on certain implementation requirements, embodiments of the invention can be implemented in hardware or in software."); Sullivan '513 at 5:38-40 ("The memory 120 stores software 180 implementing a video encoder or decoder with one or more of the described techniques and tools."); Bao at [0014] ("The techniques described in this disclosure may be implemented in hardware, software, firmware, or any combination thereof."); Sullivan '452 at [0239] ("Elements of the described

embodiments shown in software may be implemented in hardware and vice versa"). Even to the extent these references do not explicitly note implementation via software, a POSITA would understand and have found it obvious to implement the techniques and methods disclosed therein within the resulting combination. As such, extensive modification of Bao would not have been required to achieve the resulting combination.

- Sullivan '513 in view of Lakshman, Fimoff '178, Bao, Fimoff '714, Sullivan '452, Robertson, Dolazza, and/or the knowledge of a skilled artisan: Each of Lakshman, Fimoff '178, and Bao are charted separately and the citations in those charts for each limitation are incorporated herein by reference. In addition to the motivations identified above, a POSITA would have had ample reason to combine Sullivan '513 with each of these references for a variety of reasons.
    - As discussed above, a POSITA would have been motivated to combine Lakshman, Fimoff '178, Sullivan '513, Bao, Fimoff '714, Sullivan '452, Robertson, and/or Dolazza because they are all directed to systems and methods for coding and/or decoding digital video, including systems and techniques directed to motion compensation and rescaling. *See, e.g.*, Lakshman at Title ("Hybrid video decoder, hybrid video encoder, data stream"); Fimoff '178 at Abstract ("In a reduced memory MPEG decoder, drift caused by the application of ½ pixel resolution motion vectors during prediction filtering is reduced."); Sullivan '513 at Title ("Resampling and picture resizing operations for multi-resolution video coding and decoding"); Bao at Title ("Video coding with adaptive filtering for motion

InterDigital Exhibit 2006, p. 40
Microsoft v. InterDigital
IPR2024-00306

compensated prediction"); Robertson at Title ("Reduced-resolution decoding of AVC bit streams for transcoding or display at lower resolution"); Dolazza at Title ("Apparatus for simultaneously filtering and resampling digital data"); Fimoff '714 at Title ("Down converting MPEG encoded high definition sequences to lower resolution with reduced memory in decoder loop"); Sullivan '452 at [0007] ("Multi-resolution coding allows encoding of video at different spatial resolutions").

- As discussed above, a POSITA would have been motivated to combine Sullivan '513 with these references they have similar goals related to digital video coding/decoding. Because each of these references had the same or similar goals, a POSITA would have been motivated to combine Sullivan '513 with any/all of Lakshman, Fimoff '178, Bao, Fimoff '714, Sullivan '452, Robertson, and/or Dolazza to craft a resulting system/method designed to meet those shared goals.
- The resulting combination of Sullivan '513 with Lakshman, Bao, Fimoff '178, Fimoff '714, Sullivan '452, Robertson, and/or Dolazza would not require excessive modifications to the systems or methods taught by Sullivan '513. For example, the techniques, systems, and methods taught by Lakshman, Bao, Fimoff '178, Fimoff '714, Sullivan '452, Robertson, and/or Dolazza could be implemented via software modifications to Sullivan '513's resampling methods. *See, e.g.*, Lakshman at 35:15-21 ("Depending on certain implementation requirements, embodiments of the invention can be implemented in hardware or in software."); Sullivan '513

InterDigital Exhibit 2006, p. 41
Microsoft v. InterDigital
IPR2024-00306

at 5:38-40 ("The memory 120 stores software 180 implementing a video encoder or decoder with one or more of the described techniques and tools."); Bao at [0014] ("The techniques described in this disclosure may be implemented in hardware, software, firmware, or any combination thereof."); Sullivan '452 at [0239] ("Elements of the described embodiments shown in software may be implemented in hardware and vice versa"). Even to the extent these references do not explicitly note implementation via software, a POSITA would understand and have found it obvious to implement the techniques and methods disclosed therein within the resulting combination. As such, extensive modification of Sullivan '513 would not have been required to achieve the resulting combination.

- Fimoff ' 714 in view of Lakshman, Fimoff '178, Sullivan '513, Bao, Sullivan '452, Robertson, Dolazza, and/or the knowledge of a skilled artisan: Each of , Lakshman, Fimoff '178, Sullivan '513, Sullivan '452, and Bao are charted separately and the citations in those charts for each limitation are incorporated herein by reference. In addition to the motivations identified above, a POSITA would have had ample reason to combine Fimoff '714 with each of these references for a variety of reasons.
    - A POSITA would have been motivated to combine Fimoff '714, Lakshman, Fimoff '178, Sullivan '513, Bao, Sullivan '452, Robertson, and/or Dolazza because they are all directed to systems and methods for coding and/or decoding digital video, including systems and techniques directed to motion

compensation and rescaling. *See, e.g.*, Lakshman at Title ("Hybrid video decoder, hybrid video encoder, data stream"); Fimoff '178 at Abstract ("In a reduced memory MPEG decoder, drift caused by the application of ½ pixel resolution motion vectors during prediction filtering is reduced."); Sullivan '513 at Title ("Resampling and picture resizing operations for multi-resolution video coding and decoding"); Bao at Title ("Video coding with adaptive filtering for motion compensated prediction"); Robertson at Title ("Reduced-resolution decoding of AVC bit streams for transcoding or display at lower resolution"); Dolazza at Title ("Apparatus for simultaneously filtering and resampling digital data"); Fimoff '714 at Title ("Down converting MPEG encoded high definition sequences to lower resolution with reduced memory in decoder loop"); Sullivan '452 at [0007] ("Multi-resolution coding allows encoding of video at different spatial resolutions").

- As discussed above, a POSITA would have been motivated to combine Fimoff '714 with these references they have similar goals related to digital video coding/decoding. Because each of these references had the same or similar goals, a POSITA would have been motivated to combine Fimoff '714 with any/all of Lakshman, Fimoff '178, Bao, Sullivan '452, Sullivan '513, Robertson, and/or Dolazza to craft a resulting system/method designed to meet those shared goals.
- The resulting combination of Fimoff '714 with Lakshman, Fimoff '178, Sullivan '513, Bao, Sullivan '452, Robertson, and/or Dolazza would not

require excessive modifications to the systems or methods taught by Fimoff ’714. For example, the techniques, systems, and methods taught by Fimoff ’178, Sullivan ’513, Bao, Robertson, and/or Dolazza could be implemented via software modifications to Fimoff ’714’s reduced memory MPEG coder/decoder. *See, e.g.*, Lakshman at 35:15-21 (“Depending on certain implementation requirements, embodiments of the invention can be implemented in hardware or in software.”); Sullivan ’513 at 5:38-40 (“The memory 120 stores software 180 implementing a video encoder or decoder with one or more of the described techniques and tools.”); Bao at [0014] (“The techniques described in this disclosure may be implemented in hardware, software, firmware, or any combination thereof.”); Sullivan ’452 at [0239] (“Elements of the described embodiments shown in software may be implemented in hardware and vice versa”). Even to the extent these references do not explicitly note implementation via software, a POSITA would understand and have found it obvious to implement the techniques and methods disclosed therein within the resulting combination. As such, extensive modification of Fimoff ’714 would not have been required to achieve the resulting combination.

- Sullivan ’452 in view of Lakshman, Fimoff ’178, Sullivan ’513, Bao, Fimoff ’714, Robertson, Dolazza, and/or the knowledge of a skilled artisan: Each of , Lakshman, Fimoff ’178, Sullivan ’513, Fimoff ’714, and Bao are charted separately and the citations in those charts for each limitation are incorporated herein by reference. In addition to the motivations identified above, a POSITA would have had ample

reason to combine Sullivan ’452 with each of these references for a variety of reasons.

- A POSITA would have been motivated to combine Sullivan ’452, Lakshman, Fimoff ’178, Sullivan ’513, Bao, Fimoff ’714, Robertson, and/or Dolazza because they are all directed to systems and methods for coding and/or decoding digital video, including systems and techniques directed to motion compensation and rescaling. *See, e.g.*, Lakshman at Title (“Hybrid video decoder, hybrid video encoder, data stream”); Fimoff ’178 at Abstract (“In a reduced memory MPEG decoder, drift caused by the application of ½ pixel resolution motion vectors during prediction filtering is reduced.”); Sullivan ’513 at Title (“Resampling and picture resizing operations for multi-resolution video coding and decoding”); Bao at Title (“Video coding with adaptive filtering for motion compensated prediction”); Robertson at Title (“Reduced-resolution decoding of AVC bit streams for transcoding or display at lower resolution”); Dolazza at Title (“Apparatus for simultaneously filtering and resampling digital data”); Fimoff ’714 at Title (“Down converting MPEG encoded high definition sequences to lower resolution with reduced memory in decoder loop”); Sullivan ’452 at [0007] (“Multi-resolution coding allows encoding of video at different spatial resolutions”).
- As discussed above, a POSITA would have been motivated to combine Sullivan ’452 with these references they have similar goals related to digital video coding/decoding. Because each of these references had the same or

similar goals, a POSITA would have been motivated to combine Sullivan ’452 with any/all of Lakshman, Fimoff ’178, Bao, Fimoff ’714, Sullivan ’513, Robertson, and/or Dolazza to craft a resulting system/method designed to meet those shared goals.

- The resulting combination of Sullivan ’452 with Lakshman, Fimoff ’178, Sullivan ’513, Bao, Fimoff ’714, Robertson, and/or Dolazza would not require excessive modifications to the systems or methods taught by Sullivan ’452. For example, the techniques, systems, and methods taught by Fimoff ’178, Sullivan ’513, Fimoff ’714, Bao, Robertson, and/or Dolazza could be implemented via software modifications to Sullivan ’452’s encoder/decoder system implementing its parameterized filters and signaling techniques. *See, e.g.*, Lakshman at 35:15-21 (“Depending on certain implementation requirements, embodiments of the invention can be implemented in hardware or in software.”); Sullivan ’513 at 5:38-40 (“The memory 120 stores software 180 implementing a video encoder or decoder with one or more of the described techniques and tools.”); Bao at [0014] (“The techniques described in this disclosure may be implemented in hardware, software, firmware, or any combination thereof.”); Sullivan ’452 at [0239] (“Elements of the described embodiments shown in software may be implemented in hardware and vice versa”). Even to the extent these references do not explicitly note implementation via software, a POSITA would understand and have found it obvious to implement the techniques and methods disclosed therein within the resulting combination. As such,

extensive modification of Sullivan ’452 would not have been required to achieve the resulting combination.

9. ’859 Patent

In addition to combinations of references and motivations to combine references identified elsewhere herein, including within claim charts, Lenovo identifies combinations and motivations to combine based on references grouped by subject matter. The particular cited disclosures for each reference addressed in the subsections below constitute additional charts identifying where specifically in each item of prior art certain claim limitations are found. The absence of a particular reference from a group is not an admission or suggestion that the reference does not disclose any particular claim limitations.

The Asserted Claims of the 859 patent include commonly known video decoding steps, including steps related to selecting and using a probability model, e.g., “decoding said current symbol with said current probability model” and “decoding said current symbol with said current probability model. ’859, claim 1.

Lenovo identifies the following prior art references, all of which relate to decoding symbols using probability models:

- U.S Patent Pub. No. 2008/0310507 (“Ye”) discloses “a decoding unit receives encoded video data of a video block of a coding unit and decodes the encoded video data to identify one of a plurality of prediction modes for use in generating a prediction block of the video block based on prediction modes of one or more previously decoded video blocks of the coding unit.” Ye, Abstract. In Ye, symbols are decoded using one of a set of models (prediction modes).

InterDigital Exhibit 2006, p. 47
Microsoft v. InterDigital
IPR2024-00306

- U.S. Patent No. 5,880,688 ("Rust") teaches that to "decompress, it is necessary to select a context model based on the size of the original data" and "[t]wo ways of detecting the correct context model are described, including using "an indicator, identifying which context model was used to compress the original data." Rust, Abstract.
- U.S. Patent No. 5,870,036 ("Franaszek") discloses a "system and method for compressing and decompressing data using a plurality of data compression mechanisms." Franaszek, Abstract. Franaszek further teaches that the "de-compressor 270 de-compresses the block using the specified method found in the compression method table 240 (using the compression method identifier as an index), and for dictionary-based methods, specified dictionary block found in the dictionary block memory 250, and outputs uncompressed data blocks 280." *Id.,* 5:1-6. Thus, like the '859 patent, Franaszek teaches decompressing (decoding) symbols using one of a set of models that are indexed by a compression method identifier.
- U.S. Patent No. 7,777,654 ("Chang") discloses a system in which a decoder decodes a "bin based on the one context model." Chang, Abstract. A context model "of the 459 sets of context models (CMs) may be selected for each bin" based on "a context model index 'ctxIdx' to facilitate encoding each 'regular' bin of a syntax element." *Id.*, 4:47-50.
- U.S Patent Pub. No. 2010/0128995 ("Drugeon") discloses "an image decoding method for reconstructing the image data and video data that have been

compression-coded." Drugeon, [0001]. Drugeon teaches that "the prediction mode of the current block" is "read from the input bitstream (S604)." *Id.,* [0256].

- U.S Patent Pub. No. 2007/0030180 ("Yang") discloses "an arithmetic decoding system based on the adaptive content." Yang, [0015]. In Yang, an "mb_type represents the type signal of the current macro block and sub_mb_type represents the type signal of four 8*8 blocks included in the macro blocks." *Id.*, [0059].
- U.S. Patent Publication No. 2008/0240234 ("Hung") relates generally "to video coding and, in particular, to video decoding using Context Adaptive Binary Arithmetic Coding (CABAC)." Hung, [0001]. In Hung "the context model" is initialized "using header information of the identified slice." *Id.*, [0011].
- Prior art publication "Context-based adaptive binary arithmetic coding in the H. 264/AVC video compression standard" ("Marpe") describes "Context-Based Adaptive Binary Arithmetic Coding (CABAC)" which "is one of the two entropy coding methods of the new ITU- T/ISO/IEC standard for video coding, H.264/AVC." Marpe, p. 1. Marpe limits its "exposition of CABAC to an encoder only view, but in the "H.264/AVC standard itself, the converse perspective dominates—the standard normatively specifies only how to decode the video content without specifying how to encode it." *Id.*, p. 2. Marpe's techniques include "context indices in the range from 0 to 72 are related to syntax elements of macroblock type, submacroblock type, and prediction modes of spatial and of temporal type as well as slice-based and macroblock-based control information." *Id.*, p. 6.

InterDigital Exhibit 2006, p. 49
Microsoft v. InterDigital
IPR2024-00306

- Prior art publication "Hardware co-processors for real-time and high-quality H. 264/avc video coding" ("Martina"), like Marpe, describes techniques related to "H264/AVC is the new video coding standard released by ITU-T and ISO/IEC." Martina, p. 1. Also like Marpe, Martina notes that during "the binarization a Context Identifier is assigned to each syntax element" and this "identifier and the current bin position, through some thresholds, generate an index (ctxIdx), that allows finding the correct context." *Id.*, p .2
- U.S. Patent No. 5,045,852 ("Mitchell") discloses a "system and method for maximizing data compression by optimizing model selection during coding of an input stream of data symbols, wherein at least two models are run and compared, and the model with the best coding performance for a given-size segment or block of compressed data is selected such that only its block is used in an output data stream." Mitchell, Abstract. During encoding "a model identifier is incorporated at the start of each block to inform the decoder of the model selected for compression." *Id.*, 11:55-57. Then, during decoding the "decoder need only run the best model for each block when decompressing the data." *Id.*, 8:22-24.
- WO 2004/100556 A2 ("Davies") describes "coding data, particularly image data such as video data" including "a method of coding data having at least first, second and third portions is described, wherein the method includes forming an estimate of the accuracy of a prediction of the second portion based on the first portion and selectively predicting the third portion based at least on the second portion and the estimate of accuracy." Davies, Abstract. Davies further describes "coding data by

prediction, for example frames or fields of video data" including "methods of decoding data and methods of error correction and motion vector tracing." *Id.*

- Publication "Overview: VP7 Data Format and Decoder" ("VP7") describes "the VP7 compressed video data created by On2 Technologies Inc." VP7, p. 4. The VP7 decoder is "presented with a sequence of compressed frames and produces, for each compressed frame, a decompressed (reconstructed) YVU frame corresponding to the compressed frame." *Id.*, p. 6. The "VP7 data stream is encoded using a Boolean entropy coder" and the "BoolDecoder decodes ... one bool (zero-or-one boolean value) at a time." *Id.*, p. 11.

Since these prior art references all describe encoding/decoding technology, and all describe techniques for selecting models appropriate for decoding a current symbol, a POSITA would have naturally combined elements of these references.

In one example, claim 10 of the '859 Patent includes "decoding from the stream, for said current symbol, a probability model identifier" then "selecting using said probability model identifier a probability model" and "decoding said current symbol with said current probability model." '859, claim 10. Such a technique was well-known in the art before the priority date of the '859 patent. For example, Mitchell, filed almost 20 years before the '859 patent, explained that the encoder chooses a best model "on the basis of which model coded the most input symbols for a given-size compressed block" and for that best model "a model identifier is incorporated at the start of each block to inform the decoder of the model selected for compression." Mitchell, 3:17-18, 11:5-57. Thus "the decoder need only run the best model for each block when decompressing the data" producing the benefit that "although the encoder's computational effort is increased approximately in proportion to the number of models being run, the decoder is a single

InterDigital Exhibit 2006, p. 51
Microsoft v. InterDigital
IPR2024-00306

pass decoder." *Id.*, 8:22-27. Similar techniques are disclosed in at least Rust and Franaszek. Since a POSITA would have recognized that encoding was often performed off-line, and the corresponding decoding was performed on-line (e.g., to display video in real-time), a POSITA would have known that determining a best probability model while encoding, and including an identifier for that model in the data stream, produces technical benefits, including improved decoding efficiency. Therefore, a POSITA would have found it obvious to include such techniques in analogous encoding/decoding methods and systems, such as the prior art references described herein.

In a second example, claim 10 of the '859 Patent includes "adding in said subset said current probability model," which a POSITA would have understood to mean that probability models are retained for future use. '859, claim 10. A POSITA would have known that repeatedly recomputing probability models could have been a source of inefficiency, and therefore would have found it obvious to retain (or "cache") models for future use, increasing system efficiency. At least Ye and Chang include such techniques, as described further in claim charts and in the exemplary combinations included below.

In addition to combinations of references and motivations to combine references identified elsewhere herein, including within claim charts, Lenovo identifies below exemplary combinations and motivations to combine:

- Ye with VP7, Davies, Mitchell, Rust and/or Franaszek where Ye describes a "decoding unit, such as entropy decoding unit 60 of video decoder 26 decodes header information of a video block in accordance with the techniques of this disclosure" and the entropy decoding unit "decodes an encoded video bitstream to obtain header information, e.g., in the form of one or more header syntax elements."

Ye, [0131]. To the extent Ye does not explicitly disclose using the header information to identify a model to decode the symbol, and POSITA would have looked to references such as Rust and/or Franaszek, both of which disclose identifiers that indicate a particular model, e.g., to instruct the decoder which model to use for the decoding process. To the extent that Ye does not teach storing various models used during decoding, a POSITA would have recognized that saving models can improve the efficiency of the system by eliminating the need to repeatedly recompute models, particularly for subsequent decoding of similar image data, and thus would have been motivated to look to references such as Davies and/or VP7, both of which teach techniques for saving probability modes.

- Chang with Mitchell, Rust and/or Franaszek where Chang explains that a context model is selected based on a context model index. To the extent Chang does not disclose a content model index in the stream, a POSITA would have looked to Rust and/or Franaszek, both of which teach this technique, e.g., to instruct the decoder which model to use for the decoding process. To the extent that Chang does not teach storing various models used during decoding, a POSITA would have recognized that saving models can improve the efficiency of the system by eliminating the need to repeatedly recompute models, particularly for subsequent decoding of similar image data, and thus would have been motivated to look to references such as Davies and/or VP7, both of which teach techniques for saving probability modes.
- Franazek with Mitchell, Rust, Davies, VP7, Ye and/or Chang where Franaszek's teaches various adaptive decoding techniques (e.g., Lempel-Ziv compression), and

InterDigital Exhibit 2006, p. 53
Microsoft v. InterDigital
IPR2024-00306

to the extent that Franaszek does not teach storing various models used during decoding, a POSITA would have recognized that saving models can improve the efficiency of the system by eliminating the need to repeatedly recompute models, particularly for subsequent decoding of similar image data, and thus would have been motivated to look to references such as Davies, VP7, Ye and/or Chang, all of which teach techniques for saving probability modes.

- Rust with Davies, VP7, Ye, Chang, Mitchell and/or Franaszek where, like Franaszek, Rust teaches adaptive decoding techniques (e.g., Lempel-Ziv), and to the extent that Rust does not teach storing various models used during decoding, a POSITA would have recognized that saving models can improve the efficiency of the system by eliminating the need to repeatedly recompute models, particularly for subsequent decoding of similar image data, and thus would have been motivated to look to references such as Davies, VP7, Ye and/or Chang, all of which teach techniques for saving probability modes.
- Drugeon, Yang, Hung, Marpe, and Martina with Davies, VP7, Ye, Chang, Mitchell, Rust and/or Franaszek. As described above, Mitchell, Drugeon, Yang, Hung, Marpe and Martina all teach adaptive encoding/decoding techniques using one of a set of models. To the extent these references do not explicitly disclose that content model index can be transmitting in the stream to be decoded, a POSITA would have looked to Rust and/or Franaszek, both of which teach this technique, e.g., to instruct the decoder which model to use for the decoding process. In addition, to the extent that these references do not teach storing various models used during decoding, a POSITA would have recognized that saving models can improve the efficiency of

InterDigital Exhibit 2006, p. 54
Microsoft v. InterDigital
IPR2024-00306

the system by eliminating the need to repeatedly recompute models, particularly for subsequent decoding of similar image data, and thus would have been motivated to look to references such as Davies, VP7, Ye and/or Chang, all of which teach techniques for saving probability modes.

- Mitchell with Davies, VP7, Ye, Chang, Rust and/or Franaszek for reasons analogous to those described for the combinations of Drugeon, Yang, Hung, Marpe, Mitchell and Martina with Ye, Chang, Rust and/or Franaszek.

10. ’556 Patent

In addition to combinations of references and motivations to combine references identified elsewhere herein, including within claim charts, Lenovo identifies below exemplary combinations and motivations to combine:

- U.S. Pat. Pub. No. 2003/0219073 (“Lee”) in view of knowledge of a POSITA.
- Lee in view of one or more of U.S. Pat. Pub. No. 2006/0029282 (“Meeker”), U.S. Pat. Pub. No.2005/0094893 (“Samadani”), Guleryuz, A Nonlinear Loop Filter for Quantization Noise Removal in Hybrid Video Compression, IEEE 2005 (“Guleryuz”), or U.S. Pat. Pub. No. 2003/0152146 (“Lin”).
- U.S. Pat. No. 6,360,024 (“Tan”) in view of knowledge of a POSITA.
- Tan in view of one or more of Meeker, Samadani, Guleryuz, Lee, or Lin.
- U.S. Pat. Pub. No. 2006/0008013 (“Pelc”) in view of knowledge of a POSITA.
- Pelc in view of one or more of Meeker, Samadani, Guleryuz, Lee, or Lin.
- VC-1 Compressed Video Bitstream Format Decoding Process SMPTE 421M-2006 (“VC1”) in view of knowledge of a POSITA.
- VC1 in view of one or more of Pelc, Meeker, Samadani, Guleryuz, Lee, or Lin.

InterDigital Exhibit 2006, p. 55
Microsoft v. InterDigital
IPR2024-00306

- U.S. Pat. Pub. No. 2006/0110062 ("Chiang") in view of knowledge of a POSITA.
- Chiang in view of one or more of Meeker, Samadani, Guleryuz, Lee, or Lin.
- ITU-T Rec. H-264 Infrastructure of Audiovisual Services – Coding of Moving Video ("H.264") in view of knowledge of a POSITA.
- H.264 in view of one or more of Chiang, Meeker, Samadani, Guleryuz, Lee, or Lin.
- It would have been obvious to a POSITA to combine Lee's in-loop filtering method with Meeker's teachings because of their shared objective for improved video image quality and complementary approaches to artifact reduction. Lee presents an in-loop filtering method for reducing quantization effects in image data encoding and decoding, particularly addressing blocking artifacts and ringing noise through a deblocking filter and deringing filter, respectively. Meeker's patent focuses on image processing for still or motion images, particularly emphasizing the minimization of block transform edge artifacts caused by transform coefficient quantization in the image compression process. It is applicable to various compression standards, including JPEG, MPEG, and the H-series standards. The patent proposes a combination of Discrete Cosine Transform (DCT) and Wavelet Transform (WT) to alleviate blocking artifact distortion in images while retaining usability for motion imagery applications and flexibility for block-by-block processing. Both Lee and Meeker aim to improve the quality of compressed and decompressed video, specifically by reducing artifacts that result from quantization in block-based compression methods. The shared goal of enhancing image quality in compressed video provides a clear rationale for combining their approaches.

InterDigital Exhibit 2006, p. 56
Microsoft v. InterDigital
IPR2024-00306

Meeker's use of the Wavelet Transform alongside traditional Block Transforms like the DCT aligns with Lee's focus on block-based processing.

- It would be obvious to a POSITA to combine the teachings of Samadani with Lee's method due to the complementary nature of their approaches to improving image quality in video decompression. Samadani focuses on denoising images through a process involving spatially-shifted forward transforms, nonlinear mappings, and spatially-shifted inverse transforms. This method specifically addresses the reduction of artifacts inherent in compressed images, particularly ringing and blocking compression artifacts introduced by block-transform-based image compression techniques such as the block discrete cosine transform (DCT). Samadani's approach involves using a nonlinear denoiser module to transform the output transform coefficients computed from sets of shifted forward transforms. This technique is particularly effective in reducing compression artifacts without degrading image quality, such as by avoiding the blurring of features. A POSITA would be motivated to incorporate the teachings of Samadani as Lee's loop-filtering approach to reduce blocking artifacts and ringing noise would synergize well with Samadani's method of reducing compression artifacts through nonlinear denoising. This combination would result in a more comprehensive solution for artifact reduction in video decompression. The combination of these references would be considered obvious as both patents aim to improve image quality in compressed and decompressed video by addressing similar types of artifacts. The evolving nature of video compression and decompression technology would make it a logical

InterDigital Exhibit 2006, p. 57
Microsoft v. InterDigital
IPR2024-00306

and straightforward step for a POSITA to consider integrating these approaches for better overall performance.

- It would be obvious to a POSITA to combine Lee with the teachings of Guleryuz due to the complementary nature and objectives of their teachings. Guleryuz proposes a high-performance nonlinear loop filter designed to reduce quantization noise in video frames, specifically in areas with locally uniform regions and singularities. This filter, based on sparse signal decompositions, allows for the exploitation of spatial dependencies in video frames and incorporates temporal dependencies from previously decoded frames. Guleryuz's nonlinear loop filter complements Lee's deblocking and deringing filters. While Lee targets specific artifacts, Guleryuz addresses a broader range of quantization noises, especially in areas with uniform regions and sharp transitions. The combined technology would offer a more holistic approach to improving video quality. The combination of these two technologies would be considered obvious to a person skilled in the art due to their shared goal of improving decompressed video quality by reducing artifacts and noise. Both patents address similar problems in video compression making their integration a logical step in the evolution of video decompression technology. Combining Guleryuz's nonlinear loop filter with Lee's loop-filtering method would be motivated by the potential for enhanced overall video quality, versatility in application, and advanced denoising capabilities. This combination would be seen as an obvious development for a POSITA, aiming to achieve more comprehensive and effective noise and artifact reduction in video decompression.

InterDigital Exhibit 2006, p. 58
Microsoft v. InterDigital
IPR2024-00306

- It would be obvious to a POSITA to combine Lee with the teachings of Lin due to the complementary nature and objectives of their teachings. Like Lee, Lin's teachings focus on various deblocking techniques applied within the motion compensation loop. These techniques include adaptively filtering block boundaries in a reference frame and adaptively enabling or disabling the deblocking filter based on different criteria. This adaptability allows for a more precise control of filtering effects, reducing unnecessary blurring and preserving important image properties. The combination of Lin's and Lee's technologies would be seen as obvious to a person skilled in the art because both patents aim to improve image quality in compressed and decompressed video by addressing similar types of artifacts. A POSITA would be motivated to combine Lin with Lee because integration of Lin's adaptive deblocking techniques with Lee's loop-filtering methods would result in a more comprehensive approach to artifact and noise reduction in video decompression. Lin's approach to adaptively enabling or disabling deblocking filters based on context, such as at the macroblock, slice, picture, or sequence level, complements Lee's method. This flexibility would allow for more precise control over filtering effects, reducing unnecessary blurring and preserving image details, which is crucial in maintaining high video quality.
- It would have been obvious to a POSITA to combine Tan's in-loop filtering method with Meeker's teachings because of their shared objective for improved video image quality and complementary approaches to artifact reduction. Tan presents a method for filtering blocky noise as well as ring and mosquito noise from still and moving pictures. This method involves locating a block boundary in the picture

InterDigital Exhibit 2006, p. 59
Microsoft v. InterDigital
IPR2024-00306

and selecting pixels on either side of this boundary, then calculating mean values and deviations of these pixels. Based on these deviations, the method applies different predetermined filtering strategies to reduce noise and improve image quality. This approach is particularly focused on addressing discontinuities and artifacts that arise at block boundaries in compressed video data. Meeker's patent focuses on image processing for still or motion images, particularly emphasizing the minimization of block transform edge artifacts caused by transform coefficient quantization in the image compression process. It is applicable to various compression standards, including JPEG, MPEG, and the H-series standards. The patent proposes a combination of Discrete Cosine Transform (DCT) and Wavelet Transform (WT) to alleviate blocking artifact distortion in images while retaining usability for motion imagery applications and flexibility for block-by-block processing. Both Tan and Meeker aim to improve the quality of compressed and decompressed video, specifically by reducing artifacts that result from quantization in block-based compression methods. The shared goal of enhancing image quality in compressed video provides a clear rationale for combining their approaches. Meeker's use of the Wavelet Transform alongside traditional Block Transforms like the DCT aligns with Tan's focus on block-based processing.

- It would be obvious to a POSITA to combine the teachings of Samadani with Tan's method due to the complementary nature of their approaches to improving image quality in video decompression. Samadani focuses on denoising images through a process involving spatially-shifted forward transforms, nonlinear mappings, and spatially-shifted inverse transforms. This method specifically addresses the

InterDigital Exhibit 2006, p. 60
Microsoft v. InterDigital
IPR2024-00306

reduction of artifacts inherent in compressed images, particularly ringing and blocking compression artifacts introduced by block-transform-based image compression techniques such as the block discrete cosine transform (DCT). Samadani's approach involves using a nonlinear denoiser module to transform the output transform coefficients computed from sets of shifted forward transforms. This technique is particularly effective in reducing compression artifacts without degrading image quality, such as by avoiding the blurring of features. A POSITA would be motivated to incorporate the teachings of Samadani as Tan's loop-filtering approach to reduce blocking artifacts and ringing noise would synergize well with Samadani's method of reducing compression artifacts through nonlinear denoising. This combination would result in a more comprehensive solution for artifact reduction in video decompression. The combination of these references would be considered obvious as both patents aim to improve image quality in compressed and decompressed video by addressing similar types of artifacts. The evolving nature of video compression and decompression technology would make it a logical and straightforward step for a POSITA to consider integrating these approaches for better overall performance.

- It would be obvious to a POSITA to combine Tan with the teachings of Guleryuz due to the complementary nature and objectives of their teachings. Guleryuz proposes a high-performance nonlinear loop filter designed to reduce quantization noise in video frames, specifically in areas with locally uniform regions and singularities. This filter, based on sparse signal decompositions, allows for the exploitation of spatial dependencies in video frames and incorporates temporal

InterDigital Exhibit 2006, p. 61
Microsoft v. InterDigital
IPR2024-00306

dependencies from previously decoded frames. Guleryuz's nonlinear loop filter complements Tan's deblocking and deringing filters. While Tan targets specific artifacts, Guleryuz addresses a broader range of quantization noises, especially in areas with uniform regions and sharp transitions. The combined technology would offer a more holistic approach to improving video quality. The combination of these two technologies would be considered obvious to a person skilled in the art due to their shared goal of improving decompressed video quality by reducing artifacts and noise. Both patents address similar problems in video compression making their integration a logical step in the evolution of video decompression technology. Combining Guleryuz's nonlinear loop filter with Tan's loop-filtering method would be motivated by the potential for enhanced overall video quality, versatility in application, and advanced denoising capabilities. This combination would be seen as an obvious development for a POSITA, aiming to achieve more comprehensive and effective noise and artifact reduction in video decompression.

- It would be obvious to a POSITA to combine Tan with the teachings of Lin due to the complementary nature and objectives of their teachings. Like Tan, Lin's teachings focus on various deblocking techniques applied within the motion compensation loop. These techniques include adaptively filtering block boundaries in a reference frame and adaptively enabling or disabling the deblocking filter based on different criteria. This adaptability allows for a more precise control of filtering effects, reducing unnecessary blurring and preserving important image properties. The combination of Lin's and Tan's technologies would be seen as obvious to a person skilled in the art because both patents aim to improve image quality in

InterDigital Exhibit 2006, p. 62
Microsoft v. InterDigital
IPR2024-00306

compressed and decompressed video by addressing similar types of artifacts. A POSITA would be motivated to combine Lin with Tan because integration of Lin's adaptive deblocking techniques with Tan's loop-filtering methods would result in a more comprehensive approach to artifact and noise reduction in video decompression. Lin's approach to adaptively enabling or disabling deblocking filters based on context, such as at the macroblock, slice, picture, or sequence level, complements Tan's method. This flexibility would allow for more precise control over filtering effects, reducing unnecessary blurring and preserving image details, which is crucial in maintaining high video quality.

- It would be obvious to a POSITA to combine Tan with Lee due to the complementary nature and objectives of their teachings. Lee presents an in-loop filtering method for reducing quantization effects in image data encoding and decoding, particularly addressing blocking artifacts and ringing noise through a deblocking filter and deringing filter, respectively. For a POSITA, integrating these methods would be an obvious step toward enhancing video decompression quality. Both patents address similar problems in video compression. The natural progression of technology in this field, coupled with the complementary nature of these methods, makes their integration a logical and beneficial advancement. Integrating Tan's adaptive filtering method with Lee's loop-filtering approach would result in a more comprehensive system capable of addressing a wider range of artifacts in video decompression. While Lee's system effectively targets blocking artifacts and ringing noise, Tan's method adds the capability to adaptively

InterDigital Exhibit 2006, p. 63
Microsoft v. InterDigital
IPR2024-00306

reduce other forms of noise and discontinuities, particularly around block boundaries.

- It would have been obvious to a POSITA to combine Pelc's filtering method with Meeker's teachings because of their shared objective for improved video image quality and complementary approaches to artifact reduction. Pelc presents a method for deblocking filtering in video processing. It includes a processing unit that handles a portion of a frame to provide a processed frame portion, a hardware filter for deblocking filtering of this processed frame portion, and a memory unit for storing the filtered frame portion. This system allows for determining whether to perform loop deblocking filtering or post deblocking filtering, and the processing is responsive to previously filtered frame portions. Additionally, the hardware filter in Pelc's system is capable of performing not only deblocking filtering but also de-ringing filtering operations. Meeker's patent focuses on image processing for still or motion images, particularly emphasizing the minimization of block transform edge artifacts caused by transform coefficient quantization in the image compression process. It is applicable to various compression standards, including JPEG, MPEG, and the H-series standards. The patent proposes a combination of Discrete Cosine Transform (DCT) and Wavelet Transform (WT) to alleviate blocking artifact distortion in images while retaining usability for motion imagery applications and flexibility for block-by-block processing. Both Pelc and Meeker aim to improve the quality of compressed and decompressed video, specifically by reducing artifacts that result from quantization in block-based compression methods. The shared goal of enhancing image quality in compressed video

InterDigital Exhibit 2006, p. 64
Microsoft v. InterDigital
IPR2024-00306

provides a clear rationale for combining their approaches. Meeker's use of the Wavelet Transform alongside traditional Block Transforms like the DCT aligns with Pelc's focus on block-based processing.

- It would be obvious to a POSITA to combine the teachings of Samadani with Pelc's method due to the complementary nature of their approaches to improving image quality in video decompression. Samadani focuses on denoising images through a process involving spatially-shifted forward transforms, nonlinear mappings, and spatially-shifted inverse transforms. This method specifically addresses the reduction of artifacts inherent in compressed images, particularly ringing and blocking compression artifacts introduced by block-transform-based image compression techniques such as the block discrete cosine transform (DCT). Samadani's approach involves using a nonlinear denoiser module to transform the output transform coefficients computed from sets of shifted forward transforms. This technique is particularly effective in reducing compression artifacts without degrading image quality, such as by avoiding the blurring of features. A POSITA would be motivated to incorporate the teachings of Samadani as Pelc's loop-filtering approach to reduce blocking artifacts and ringing noise would synergize well with Samadani's method of reducing compression artifacts through nonlinear denoising. This combination would result in a more comprehensive solution for artifact reduction in video decompression. The combination of these references would be considered obvious as both patents aim to improve image quality in compressed and decompressed video by addressing similar types of artifacts. The evolving nature of video compression and decompression technology would make

InterDigital Exhibit 2006, p. 65
Microsoft v. InterDigital
IPR2024-00306

it a logical and straightforward step for a POSITA to consider integrating these approaches for better overall performance.

- It would be obvious to a POSITA to combine Pelc with the teachings of Guleryuz due to the complementary nature and objectives of their teachings. Guleryuz proposes a high-performance nonlinear loop filter designed to reduce quantization noise in video frames, specifically in areas with locally uniform regions and singularities. This filter, based on sparse signal decompositions, allows for the exploitation of spatial dependencies in video frames and incorporates temporal dependencies from previously decoded frames. Guleryuz's nonlinear loop filter complements Pelc's deblocking and deringing filters. While Pelc targets specific artifacts, Guleryuz addresses a broader range of quantization noises, especially in areas with uniform regions and sharp transitions. The combined technology would offer a more holistic approach to improving video quality. The combination of these two technologies would be considered obvious to a person skilled in the art due to their shared goal of improving decompressed video quality by reducing artifacts and noise. Both patents address similar problems in video compression making their integration a logical step in the evolution of video decompression technology. Combining Guleryuz's nonlinear loop filter with Pelc's loop-filtering method would be motivated by the potential for enhanced overall video quality, versatility in application, and advanced denoising capabilities. This combination would be seen as an obvious development for a POSITA, aiming to achieve more comprehensive and effective noise and artifact reduction in video decompression.

InterDigital Exhibit 2006, p. 66
Microsoft v. InterDigital
IPR2024-00306

- It would be obvious to a POSITA to combine Pelc with the teachings of Lin due to the complementary nature and objectives of their teachings. Like Pelc, Lin's teachings focus on various deblocking techniques applied within the motion compensation loop. These techniques include adaptively filtering block boundaries in a reference frame and adaptively enabling or disabling the deblocking filter based on different criteria. This adaptability allows for a more precise control of filtering effects, reducing unnecessary blurring and preserving important image properties. The combination of Lin's and Pelc's technologies would be seen as obvious to a person skilled in the art because both patents aim to improve image quality in compressed and decompressed video by addressing similar types of artifacts. A POSITA would be motivated to combine Lin with Pelc because integration of Lin's adaptive deblocking techniques with Pelc's loop-filtering methods would result in a more comprehensive approach to artifact and noise reduction in video decompression. Lin's approach to adaptively enabling or disabling deblocking filters based on context, such as at the macroblock, slice, picture, or sequence level, complements Pelc's method. This flexibility would allow for more precise control over filtering effects, reducing unnecessary blurring and preserving image details, which is crucial in maintaining high video quality.
- It would be obvious to a POSITA to combine Pelc with Lee due to the complementary nature and objectives of their teachings. Lee presents an in-loop filtering method for reducing quantization effects in image data encoding and decoding, particularly addressing blocking artifacts and ringing noise through a deblocking filter and deringing filter, respectively. For a POSITA, integrating these

InterDigital Exhibit 2006, p. 67
Microsoft v. InterDigital
IPR2024-00306

methods would be an obvious step toward enhancing video decompression quality. Both patents address similar problems in video compression. The natural progression of technology in this field, coupled with the complementary nature of these methods, makes their integration a logical and beneficial advancement. Integrating Pelc's adaptive filtering method with Lee's loop-filtering approach would result in a more comprehensive system capable of addressing a wider range of artifacts in video decompression.

- It would have been obvious to a POSITA to combine Chiang's filtering method with Meeker's teachings because of their shared objective for improved video image quality and complementary approaches to artifact reduction. Chiang presents an advanced image decoding system that employs a deblocking unit to process image information, reducing or removing blocking artifacts from decoded images. This deblocking unit is adept at handling grid and staircase noise along the borders of blocks in a decoded image. Additionally, the output of this deblocking unit is processed by an adaptive edge filter, which is designed to eliminate ringing artifacts from decoded images, especially near edges and flat regions. The adaptive edge filter operates based on encoding parameters, including quantization parameters, macroblock coding type, and picture type, and it also integrates information from an interlace detector to adapt its processing to interlaced images. Meeker's patent focuses on image processing for still or motion images, particularly emphasizing the minimization of block transform edge artifacts caused by transform coefficient quantization in the image compression process. It is applicable to various compression standards, including JPEG, MPEG, and the H-

InterDigital Exhibit 2006, p. 68
Microsoft v. InterDigital
IPR2024-00306

series standards. The patent proposes a combination of Discrete Cosine Transform (DCT) and Wavelet Transform (WT) to alleviate blocking artifact distortion in images while retaining usability for motion imagery applications and flexibility for block-by-block processing. Both Chiang and Meeker aim to improve the quality of compressed and decompressed video, specifically by reducing artifacts that result from quantization in block-based compression methods. The shared goal of enhancing image quality in compressed video provides a clear rationale for combining their approaches. Meeker's use of the Wavelet Transform alongside traditional Block Transforms like the DCT aligns with Chiang's focus on block-based processing.

- It would be obvious to a POSITA to combine the teachings of Samadani with Chiang's method due to the complementary nature of their approaches to improving image quality in video decompression. Samadani focuses on denoising images through a process involving spatially-shifted forward transforms, nonlinear mappings, and spatially-shifted inverse transforms. This method specifically addresses the reduction of artifacts inherent in compressed images, particularly ringing and blocking compression artifacts introduced by block-transform-based image compression techniques such as the block discrete cosine transform (DCT). Samadani's approach involves using a nonlinear denoiser module to transform the output transform coefficients computed from sets of shifted forward transforms. This technique is particularly effective in reducing compression artifacts without degrading image quality, such as by avoiding the blurring of features. A POSITA would be motivated to incorporate the teachings of Samadani as Chiang's loop-

InterDigital Exhibit 2006, p. 69
Microsoft v. InterDigital
IPR2024-00306

filtering approach to reduce blocking artifacts and ringing noise would synergize well with Samadani's method of reducing compression artifacts through nonlinear denoising. This combination would result in a more comprehensive solution for artifact reduction in video decompression. The combination of these references would be considered obvious as both patents aim to improve image quality in compressed and decompressed video by addressing similar types of artifacts. The evolving nature of video compression and decompression technology would make it a logical and straightforward step for a POSITA to consider integrating these approaches for better overall performance.

- It would be obvious to a POSITA to combine Chiang with the teachings of Guleryuz due to the complementary nature and objectives of their teachings. Guleryuz proposes a high-performance nonlinear loop filter designed to reduce quantization noise in video frames, specifically in areas with locally uniform regions and singularities. This filter, based on sparse signal decompositions, allows for the exploitation of spatial dependencies in video frames and incorporates temporal dependencies from previously decoded frames. Guleryuz's nonlinear loop filter complements Chiang's deblocking and deringing filters. While Chiang targets specific artifacts, Guleryuz addresses a broader range of quantization noises, especially in areas with uniform regions and sharp transitions. The combined technology would offer a more holistic approach to improving video quality. The combination of these two technologies would be considered obvious to a person skilled in the art due to their shared goal of improving decompressed video quality by reducing artifacts and noise. Both patents address similar problems in video

InterDigital Exhibit 2006, p. 70
Microsoft v. InterDigital
IPR2024-00306

compression making their integration a logical step in the evolution of video decompression technology. Combining Guleryuz's nonlinear loop filter with Chiang's loop-filtering method would be motivated by the potential for enhanced overall video quality, versatility in application, and advanced denoising capabilities. This combination would be seen as an obvious development for a POSITA, aiming to achieve more comprehensive and effective noise and artifact reduction in video decompression.

- It would be obvious to a POSITA to combine Chiang with the teachings of Lin due to the complementary nature and objectives of their teachings. Like Chiang, Lin's teachings focus on various deblocking techniques applied within the motion compensation loop. These techniques include adaptively filtering block boundaries in a reference frame and adaptively enabling or disabling the deblocking filter based on different criteria. This adaptability allows for a more precise control of filtering effects, reducing unnecessary blurring and preserving important image properties. The combination of Lin's and Chiang's technologies would be seen as obvious to a person skilled in the art because both patents aim to improve image quality in compressed and decompressed video by addressing similar types of artifacts. A POSITA would be motivated to combine Lin with Chiang because integration of Lin's adaptive deblocking techniques with Chiang's loop-filtering methods would result in a more comprehensive approach to artifact and noise reduction in video decompression. Lin's approach to adaptively enabling or disabling deblocking filters based on context, such as at the macroblock, slice, picture, or sequence level, complements Chiang's method. This flexibility would allow for more precise

InterDigital Exhibit 2006, p. 71
Microsoft v. InterDigital
IPR2024-00306

control over filtering effects, reducing unnecessary blurring and preserving image details, which is crucial in maintaining high video quality.

- It would be obvious to a POSITA to combine Chiang with Lee due to the complementary nature and objectives of their teachings. Lee presents an in-loop filtering method for reducing quantization effects in image data encoding and decoding, particularly addressing blocking artifacts and ringing noise through a deblocking filter and deringing filter, respectively. For a POSITA, integrating these methods would be an obvious step toward enhancing video decompression quality. Both patents address similar problems in video compression. The natural progression of technology in this field, coupled with the complementary nature of these methods, makes their integration a logical and beneficial advancement. Integrating Chiang's adaptive filtering method with Lee's loop-filtering approach would result in a more comprehensive system capable of addressing a wider range of artifacts in video decompression.
- It would have been obvious to a POSITA to combine VC1's filtering method with Meeker's teachings because of their shared objective for improved video image quality and complementary approaches to artifact reduction. VC1 presents video compression techniques, which include in-loop filtering mechanisms. These mechanisms are primarily focused on reducing artifacts that are common in compressed video, such as blocking and blurring, which can occur due to the quantization and transformation processes used in video compression. VC1's approach to filtering is integral to maintaining high image quality, particularly in scenarios where bandwidth or storage constraints necessitate high compression

InterDigital Exhibit 2006, p. 72
Microsoft v. InterDigital
IPR2024-00306

ratios. Meeker's patent focuses on image processing for still or motion images, particularly emphasizing the minimization of block transform edge artifacts caused by transform coefficient quantization in the image compression process. It is applicable to various compression standards, including JPEG, MPEG, and the H-series standards. The patent proposes a combination of Discrete Cosine Transform (DCT) and Wavelet Transform (WT) to alleviate blocking artifact distortion in images while retaining usability for motion imagery applications and flexibility for block-by-block processing. Both VC1 and Meeker aim to improve the quality of compressed and decompressed video, specifically by reducing artifacts that result from quantization in block-based compression methods. The shared goal of enhancing image quality in compressed video provides a clear rationale for combining their approaches. Meeker's use of the Wavelet Transform alongside traditional Block Transforms like the DCT aligns with VC1's focus on block-based processing.

- It would be obvious to a POSITA to combine the teachings of Samadani with VC1's method due to the complementary nature of their approaches to improving image quality in video decompression. Samadani focuses on denoising images through a process involving spatially-shifted forward transforms, nonlinear mappings, and spatially-shifted inverse transforms. This method specifically addresses the reduction of artifacts inherent in compressed images, particularly ringing and blocking compression artifacts introduced by block-transform-based image compression techniques such as the block discrete cosine transform (DCT). Samadani's approach involves using a nonlinear denoiser module to transform the

InterDigital Exhibit 2006, p. 73
Microsoft v. InterDigital
IPR2024-00306

output transform coefficients computed from sets of shifted forward transforms. This technique is particularly effective in reducing compression artifacts without degrading image quality, such as by avoiding the blurring of features. A POSITA would be motivated to incorporate the teachings of Samadani as VC1's loop-filtering approach to reduce blocking artifacts and ringing noise would synergize well with Samadani's method of reducing compression artifacts through nonlinear denoising. This combination would result in a more comprehensive solution for artifact reduction in video decompression. The combination of these references would be considered obvious as both patents aim to improve image quality in compressed and decompressed video by addressing similar types of artifacts. The evolving nature of video compression and decompression technology would make it a logical and straightforward step for a POSITA to consider integrating these approaches for better overall performance.

- It would be obvious to a POSITA to combine VC1 with the teachings of Guleryuz due to the complementary nature and objectives of their teachings. Guleryuz proposes a high-performance nonlinear loop filter designed to reduce quantization noise in video frames, specifically in areas with locally uniform regions and singularities. This filter, based on sparse signal decompositions, allows for the exploitation of spatial dependencies in video frames and incorporates temporal dependencies from previously decoded frames. Guleryuz's nonlinear loop filter complements VC1's deblocking and deringing filters. While VC1 targets specific artifacts, Guleryuz addresses a broader range of quantization noises, especially in areas with uniform regions and sharp transitions. The combined technology would

InterDigital Exhibit 2006, p. 74
Microsoft v. InterDigital
IPR2024-00306

offer a more holistic approach to improving video quality. The combination of these two technologies would be considered obvious to a person skilled in the art due to their shared goal of improving decompressed video quality by reducing artifacts and noise. Both patents address similar problems in video compression making their integration a logical step in the evolution of video decompression technology. Combining Guleryuz's nonlinear loop filter with VC1's loop-filtering method would be motivated by the potential for enhanced overall video quality, versatility in application, and advanced denoising capabilities. This combination would be seen as an obvious development for a POSITA, aiming to achieve more comprehensive and effective noise and artifact reduction in video decompression.

- It would be obvious to a POSITA to combine VC1 with the teachings of Lin due to the complementary nature and objectives of their teachings. Like VC1, Lin's teachings focus on various deblocking techniques applied within the motion compensation loop. These techniques include adaptively filtering block boundaries in a reference frame and adaptively enabling or disabling the deblocking filter based on different criteria. This adaptability allows for a more precise control of filtering effects, reducing unnecessary blurring and preserving important image properties. The combination of Lin's and VC1's technologies would be seen as obvious to a person skilled in the art because both patents aim to improve image quality in compressed and decompressed video by addressing similar types of artifacts. A POSITA would be motivated to combine Lin with VC1 because integration of Lin's adaptive deblocking techniques with VC1's loop-filtering methods would result in a more comprehensive approach to artifact and noise reduction in video

InterDigital Exhibit 2006, p. 75
Microsoft v. InterDigital
IPR2024-00306

decompression. Lin's approach to adaptively enabling or disabling deblocking filters based on context, such as at the macroblock, slice, picture, or sequence level, complements VC1's method. This flexibility would allow for more precise control over filtering effects, reducing unnecessary blurring and preserving image details, which is crucial in maintaining high video quality.

- It would be obvious to a POSITA to combine VC1 with Lee due to the complementary nature and objectives of their teachings. Lee presents an in-loop filtering method for reducing quantization effects in image data encoding and decoding, particularly addressing blocking artifacts and ringing noise through a deblocking filter and deringing filter, respectively. For a POSITA, integrating these methods would be an obvious step toward enhancing video decompression quality. Both patents address similar problems in video compression. The natural progression of technology in this field, coupled with the complementary nature of these methods, makes their integration a logical and beneficial advancement. Integrating VC1's adaptive filtering method with Lee's loop-filtering approach would result in a more comprehensive system capable of addressing a wider range of artifacts in video decompression.
- It would be obvious to a POSITA to combine VC1 with Pelc due to the complementary nature and objectives of their teachings. Pelc presents a method for deblocking filtering in video processing. It includes a processing unit that handles a portion of a frame to provide a processed frame portion, a hardware filter for deblocking filtering of this processed frame portion, and a memory unit for storing the filtered frame portion. This system allows for determining whether to

InterDigital Exhibit 2006, p. 76
Microsoft v. InterDigital
IPR2024-00306

perform loop deblocking filtering or post deblocking filtering, and the processing is responsive to previously filtered frame portions. Additionally, the hardware filter in Pelc's system is capable of performing not only deblocking filtering but also de-ringing filtering operations. It would be obvious to incorporate Pelc's approach into the VC1 standard, and a POSITA would be motivated to do so because the efficiency of in-loop filtering can be significantly improved. Pelc's method of adaptively deciding between loop and post deblocking filtering could be expanded to include deringing filtering or adaptive sparse denoising filtering. This integration would result in a more efficient use of computational resources, as it allows for more flexibility in managing different types of artifacts during the compression process. For a POSITA, combining VC1's and Pelc's methods would be an obvious evolution in video compression technology. Both technologies focus on artifact reduction. Integrating these approaches aligns with the ongoing trend in video compression to enhance image quality while managing computational load effectively.

- It would have been obvious to a POSITA to combine H.264's filtering method with Meeker's teachings because of their shared objective for improved video image quality and complementary approaches to artifact reduction. H.264 presents video compression techniques, which include in-loop filtering mechanisms. These mechanisms are primarily focused on reducing artifacts that are common in compressed video, such as blocking and blurring, which can occur due to the quantization and transformation processes used in video compression. H.264's approach to filtering is integral to maintaining high image quality, particularly in

InterDigital Exhibit 2006, p. 77
Microsoft v. InterDigital
IPR2024-00306

scenarios where bandwidth or storage constraints necessitate high compression ratios. Meeker's patent focuses on image processing for still or motion images, particularly emphasizing the minimization of block transform edge artifacts caused by transform coefficient quantization in the image compression process. It is applicable to various compression standards, including JPEG, MPEG, and the H-series standards. The patent proposes a combination of Discrete Cosine Transform (DCT) and Wavelet Transform (WT) to alleviate blocking artifact distortion in images while retaining usability for motion imagery applications and flexibility for block-by-block processing. Both H.264 and Meeker aim to improve the quality of compressed and decompressed video, specifically by reducing artifacts that result from quantization in block-based compression methods. The shared goal of enhancing image quality in compressed video provides a clear rationale for combining their approaches. Meeker's use of the Wavelet Transform alongside traditional Block Transforms like the DCT aligns with H.264's focus on block-based processing.

- It would be obvious to a POSITA to combine the teachings of Samadani with H.264's method due to the complementary nature of their approaches to improving image quality in video decompression. Samadani focuses on denoising images through a process involving spatially-shifted forward transforms, nonlinear mappings, and spatially-shifted inverse transforms. This method specifically addresses the reduction of artifacts inherent in compressed images, particularly ringing and blocking compression artifacts introduced by block-transform-based image compression techniques such as the block discrete cosine transform (DCT).

InterDigital Exhibit 2006, p. 78
Microsoft v. InterDigital
IPR2024-00306

Samadani's approach involves using a nonlinear denoiser module to transform the output transform coefficients computed from sets of shifted forward transforms. This technique is particularly effective in reducing compression artifacts without degrading image quality, such as by avoiding the blurring of features. A POSITA would be motivated to incorporate the teachings of Samadani as H.264's loop-filtering approach to reduce blocking artifacts and ringing noise would synergize well with Samadani's method of reducing compression artifacts through nonlinear denoising. This combination would result in a more comprehensive solution for artifact reduction in video decompression. The combination of these references would be considered obvious as both patents aim to improve image quality in compressed and decompressed video by addressing similar types of artifacts. The evolving nature of video compression and decompression technology would make it a logical and straightforward step for a POSITA to consider integrating these approaches for better overall performance.

- It would be obvious to a POSITA to combine H.264 with the teachings of Guleryuz due to the complementary nature and objectives of their teachings. Guleryuz proposes a high-performance nonlinear loop filter designed to reduce quantization noise in video frames, specifically in areas with locally uniform regions and singularities. This filter, based on sparse signal decompositions, allows for the exploitation of spatial dependencies in video frames and incorporates temporal dependencies from previously decoded frames. Guleryuz's nonlinear loop filter complements H.264's deblocking and deringing filters. While H.264 targets specific artifacts, Guleryuz addresses a broader range of quantization noises,

InterDigital Exhibit 2006, p. 79
Microsoft v. InterDigital
IPR2024-00306

especially in areas with uniform regions and sharp transitions. The combined technology would offer a more holistic approach to improving video quality. The combination of these two technologies would be considered obvious to a person skilled in the art due to their shared goal of improving decompressed video quality by reducing artifacts and noise. Both patents address similar problems in video compression making their integration a logical step in the evolution of video decompression technology. Combining Guleryuz's nonlinear loop filter with H.264's loop-filtering method would be motivated by the potential for enhanced overall video quality, versatility in application, and advanced denoising capabilities. This combination would be seen as an obvious development for a POSITA, aiming to achieve more comprehensive and effective noise and artifact reduction in video decompression.

- It would be obvious to a POSITA to combine H.264 with the teachings of Lin due to the complementary nature and objectives of their teachings. Like H.264, Lin's teachings focus on various deblocking techniques applied within the motion compensation loop. These techniques include adaptively filtering block boundaries in a reference frame and adaptively enabling or disabling the deblocking filter based on different criteria. This adaptability allows for a more precise control of filtering effects, reducing unnecessary blurring and preserving important image properties. The combination of Lin's and H.264's technologies would be seen as obvious to a person skilled in the art because both patents aim to improve image quality in compressed and decompressed video by addressing similar types of artifacts. A POSITA would be motivated to combine Lin with H.264 because integration of

InterDigital Exhibit 2006, p. 80
Microsoft v. InterDigital
IPR2024-00306

Lin's adaptive deblocking techniques with H.264's loop-filtering methods would result in a more comprehensive approach to artifact and noise reduction in video decompression. Lin's approach to adaptively enabling or disabling deblocking filters based on context, such as at the macroblock, slice, picture, or sequence level, complements H.264's method. This flexibility would allow for more precise control over filtering effects, reducing unnecessary blurring and preserving image details, which is crucial in maintaining high video quality.

- It would be obvious to a POSITA to combine H.264 with Lee due to the complementary nature and objectives of their teachings. Lee presents an in-loop filtering method for reducing quantization effects in image data encoding and decoding, particularly addressing blocking artifacts and ringing noise through a deblocking filter and deringing filter, respectively. For a POSITA, integrating these methods would be an obvious step toward enhancing video decompression quality. Both patents address similar problems in video compression. The natural progression of technology in this field, coupled with the complementary nature of these methods, makes their integration a logical and beneficial advancement. Integrating H.264's adaptive filtering method with Lee's loop-filtering approach would result in a more comprehensive system capable of addressing a wider range of artifacts in video decompression.
- It would be obvious to a POSITA to combine H.264 with Chiang due to the complementary nature and objectives of their teachings. Chiang presents an advanced image decoding system that employs a deblocking unit to process image information, reducing or removing blocking artifacts from decoded images. This

InterDigital Exhibit 2006, p. 81
Microsoft v. InterDigital
IPR2024-00306

deblocking unit is adept at handling grid and staircase noise along the borders of blocks in a decoded image. Additionally, the output of this deblocking unit is processed by an adaptive edge filter, which is designed to eliminate ringing artifacts from decoded images, especially near edges and flat regions. The adaptive edge filter operates based on encoding parameters, including quantization parameters, macroblock coding type, and picture type, and it also integrates information from an interlace detector to adapt its processing to interlaced images. Integrating H.264's adaptive filtering method with Chiang's loop-filtering approach would result in a more comprehensive system capable of addressing a wider range of artifacts in video decompression.

11. '933 and '054 Patents

In addition to combinations of references and motivations to combine references identified elsewhere herein, including within claim charts, Lenovo identifies below exemplary combinations and motivations to combine:

- Ahya in view of McKillop, Burns, Asano, Hoddie, OBEX Standard, Cheverst, Hinckley, HP H5555, Forutanpour, Frodigh, Turner, Aholainen, Chouraki, Johanson, and/or knowledge of a POSITA. In addition to the motivations identified above, a POSITA would have had ample reason to combine Ahya with each of these references for a variety of reasons.
    - A POSITA would have been motivated to combine Ahya's wireless filesharing devices and methods with McKillop, Burns, Forutanpour, Asano, and/or Hoddie that teaches using Bluetooth for discovering devices followed by using WiFi to transfer data, because they are all directed to the same field of wireless data transfer between devices.

InterDigital Exhibit 2006, p. 82
Microsoft v. InterDigital
IPR2024-00306

- McKillop, Burns, Forutanpour, Asano, and Hoddie disclose wirelessly connected electronic devices that communicate with one another using wireless communication protocols, such as Bluetooth and/or Wi-Fi. Like Ahya, these references also disclose using Bluetooth to detect other devices. Furthermore, these references identify various advantages of combining discovery using Bluetooth with transfer using WiFi. For example, the references recognize, as discussed in the claim chart, that while Bluetooth is good at wirelessly detecting other target devices for file transfer, Bluetooth is relatively slow. *See, e.g.*, Burns at [0020]. The references further recognize that 802.11 WiFi provides superior transfer speed over Bluetooth. *See, e.g.*, McKillop at [0003]. However, the references recognize that because WiFi consumes more power compared to Bluetooth leading to short battery life, persistent use of WiFi is not necessarily desirable. *See id.* In light of these various advantages recognized by the prior art, a POSITA would have found it obvious to modify the methods and systems of Ahya to perform device discovery using Bluetooth (as already done by Ahya), then switch to WiFi for the transfer of data as taught by McKillop, Burns, Forutanpour, Asano, and Hoddie to achieve the benefits described above, such as improved speed and power consumption without other noticeable difference in the user's filesharing experience.
- Other references also disclose combining Bluetooth discovery with WiFi transfer. For example, U.S. Patent Publication No. 2007/013504 ("Kapur") recognizes strengths of Bluetooth include "a ubiquitous presence, [and] a

sophisticated device discovery mechanism" but has a "data rate that is relatively low compared to LAN technologies, such as 802.11." Kapur at [0022]. As a solution, Kapur discloses that "[a]fter the Bluetooth® device 1002 discovers the Bluetooth® device 1004, the Bluetooth® protocol stack within the Bluetooth® device 1002 may configure the high-speed data connection 1008," which includes an 802.11 (Wi-Fi) connection. *Id.* at [0065]-[0066]; *see also id*. at [0022], [0029]. As another example, U.S. Patent Publication No. 2009/0034498 ("Banerjea") discloses that "a Bluetooth connection (BT connection) 110 may be established between the mobile communication devices" and then "[m]ultimedia data may be transmitted over the WiFi connection." Banerjea at [0026]-[0027]; *see also id*. at Abstract, [0008]-[0010], [0037]-[0047]. As yet another example, U.S. Patent Publication No. 2009/0215398 ("Adler") discloses "establishing a first connection between a first device and a second device with a first networking standard," such as Bluetooth, and then "transferring data between the first and second devices using [a] second networking standard," such as Wi-Fi. Adler at [0006]-[0008]; *see also id*. at Abstract, [0038]-[0056], claim 5.

- Furthermore, in 2008 prior to the '933 and '054 patents' priority date, the wireless communications industry already recognized the need and benefit of using Bluetooth for discovery and WiFi for transferring data, and was in the process of implementing and standardizing one such technology. For example, the Bluetooth Special Interest Group (SIG) in charge of

developing the Bluetooth standards issued a press release on February 11, 2008 describing an architecture under development called "Alternate MAC/PHY," which "tak[es] classic Bluetooth connections – using Bluetooth protocols, profiles, security and other architectural elements – and allow[s] it to jump on top of the already present 802.11 radio, when necessary, to send bulky entertainment data, faster." https://web.archive.org/web/20080214091219/http:/www.bluetooth.com/Bluetooth/Press/SIG/BLUETOOTH_TECHNOLOGY_TO_HARNESS_THE_SPEED_OF_80211.htm. Dr. Foley, the executive director of Bluetooth SIG, characterized this architecture "the wireless technology equivalent of 'low hanging fruit'." *Id.* The press release elaborated that "the SIG will make use of IEEE 802.11," recognizing it as "a technology already present in many of the devices demanding greater speeds." *Id.* A wireless and mobile analyst characterized this architectural development by Bluetooth SIG as "taking a logical step by applying Bluetooth protocols over an existing 802.11 radio to achieve efficient transfers of high data throughput applications," and noted that "[s]ince Bluetooth and 802.11 already have significant traction in mobile devices, this coupled solution could prove to be an efficient interim solution." *Id.* As another example, a February 12, 2008 Network World article noted that "Bluetooth is turning to a more ubiquitous high-speed wireless technology to help with applications where Bluetooth's own bandwidth (with a theoretical maximum of 3 megabits per second) is insufficient. . . . Alternate MAC/PHY would let a Bluetooth

connection use an 802.11x network only when the additional bandwidth was needed; for tasks that can make do with standard Bluetooth speeds, the Bluetooth connection would stop using the Wi-Fi network." https://web.archive.org/web/20080315065054/https:/www.networkworld.com/news/2008/021208-mwc-bluetooth-to-work-with.html. As yet another example, in a May 13, 2008 EE Times Article by Dr. Foley, the executive director of Bluetooth SIG, he noted that "At the heart of Bluetooth high speed technology is the concept of the Generic Alternate MAC/PHY (Generic AMP), an innovative formula for radio substitution that allows the Bluetooth stack to dynamically select the right radio for any job"; "The Generic AMP enables Bluetooth profiles and protocols to take advantage of higher data rates using one or more alternate high speed radio technologies"; "The Bluetooth stack will recognize the need for fast transfer of a large amount of data and automatically assign the 802.11 AMP to the task. When the transfer is completed and high speed is no longer required, the 802.11 radio will be shut down, and the standard Bluetooth radio will activate to maintain the Bluetooth connection"; "Already popular among younger owners of Bluetooth mobile devices who share content with their friends, this use case is currently served by the "Send via Bluetooth" function already implemented on many mobile phones, PCs and PDAs. The scenario's appeal grows with the addition of the 802.11 high speed channel reducing file transfer times by a factor of ten or more"; "the decision to pursue 802.11 as a high speed Bluetooth channel is the logical answer to a

clear market need. It simply makes sense to use technology available now to deliver what the market needs now." https://www.eetimes.com/how-bluetooth-and-802-11-will-team-up-to-deliver-high-speed-wireless-connections.

- The resulting combination of Ahya with one or more McKillop, Burns, Forutanpour, Asano, and /or Hoddie makes no hardware changes to the Ahya's device, only minor software changes. Ahya already recognized that multiple wireless communication methods, such as Bluetooth and WiFi, can be implemented on a single device or system. Moreover, Ahya would still use Bluetooth for any device-to-device interactions prior to actual transfer of content (to save power), as taught by McKillop, Burns, Forutanpour, Asano, and /or Hoddie. Thus, the combination entails making only a minor software modification to switch to Wi-Fi when transferring a file, as taught by the references.
- Cheverst, Hinckley, HP H5555, Forutanpour, Turner, and other references disclose transferring data by first exchanging a series of messages to setup the data transfer. Hinckley, for example, discloses that "a user sees a thumbnail preview of the image . . . that another user is transmitting, and can choose whether or not to accept it (Yes/No). By selecting No, the receiving user is stopping the transfer of information from the sending device." Hinckley at [0061]; *see also id.* at [0035], [0038], [0058]-[0062], FIG. 3. Cheverst Fig. 6 discloses a prompt to accept or deny incoming data transfer. Cheverst at 49. Forutanpour discloses "transmitting

computing device 10 may send a file transmission query to the targeted computing device before transmitting a file. The computing device may receive an authorization response from the targeted computing device." Forutanpour at [0143]. HP H5555 also discloses a prompt to accept or deny incoming data transfer. U.S. Patent Publication No. 2005/0113079 ("Guo") discloses that the receiving device's "processor 10 causes GUI 12 to prompt the user to accept the data file 16." Guo at [0017]. U.K. Patent Publication No. GB 2,439,364 ("Turner") also discloses that such accept/deny functionality was standard in the Bluetooth protocol by at least 2005, when Turner published. Turner at 2 ("Bluetooth does provide various security mechanisms that can be used to prevent unwanted connections to a device and a subsequent infection by malware."). For example, "if a connection does result in some type of file transfer, users can be prompted as to whether they wish to accept such a transfer." *Id.* A POSITA would have recognized that a message to transfer data must be sent by the sending device in order for the receiving device to display a prompt to accept or deny the incoming data transfer based on reception of the message to transfer data. Indeed, logic requires such a message to transfer in this context, and other references discussed further below show that such message to transfer are standard features of communication protocols. Furthermore, a POSITA would have further recognized that a user input accepting the incoming transfer would cause the receiving device to transmit an acceptance message accepting the request to transfer,

which would be received by the sending device and cause the sending device to start wireless transfer of the data. Again, logic requires such an acceptance message to be transmitted and received, and other references discussed further below show that such acceptance message are standard features of communication protocols.

- Various prior art communication protocols disclose a message to transfer followed by an acceptance to transfer. For example, the Infrared Data Association® (IrDA®) Object Exchange Protocol OBEX™ ("OBEX Standard") discloses a file transfer setup procedure involving sending a "request" to transfer a named file to a target device and then sending the file only after receiving a response of "CONTINUE" from the target receiving device. OBEX Standard at 73-74. Furthermore, Bluetooth version 1.1, as specified in Bluetooth Specification Version 1.1, Vol. 2, "Profiles" ("Bluetooth Version 1.1 Vol. 2"), uses the OBEX Put operation described above to transfer a file:

InterDigital Exhibit 2006, p. 89
Microsoft v. InterDigital
IPR2024-00306

5.5 PUSHING DATA TO SERVER

The data object(s) is pushed to the Server using the PUT operation of the OBEX protocol. The data can be sent in one or more OBEX packets. The PUT request must include the following fields and headers:

Field/ Header	Name	Value	Status	Explanation
Field	Opcode for PUT	0x02 or 0x82	M	-
Field	Packet Length	Varies	M	-
Header	ConnectionID	Varies	C1	The header value specifies the current connection to the specific service.
Header	Name	Varies	M	The header value is the name of a single object, object store, or log information.
Header	Body/End of Body	Varies	M	End of Body identifies the last chunk of the object body.

Table 5.9: Fields and Headers in PUT Request

Bluetooth Version 1.1 Vol. 2 at 330. *See also* Bluetooth Version 2.0 Vol. 4 at 181:

2.1 PROFILE STACK

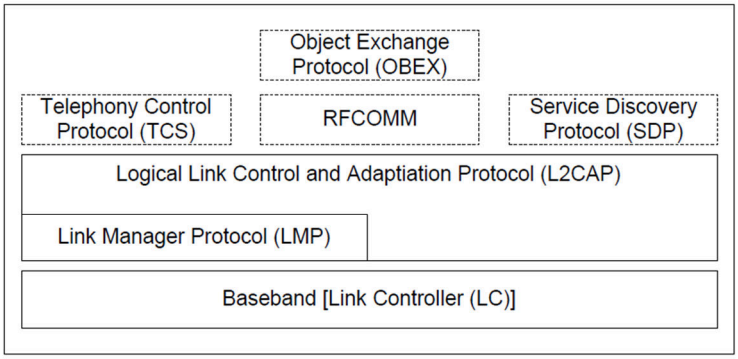

Figure 2.1: Profile stack covered by this profile.

The main purpose of this profile is to describe the use of the lower layers of the Bluetooth protocol stack (LC and LMP). To describe security related alternatives, also higher layers (L2CAP, RFCOMM and OBEX) are included.

- As another example, well known ad hoc (direct, peer-to-peer) Wi-Fi protocols (defined by the distributed coordination function (DCF) mode of

IEEE 802.11) also used similar request and acceptance messages—a four-way handshake known as RTS-CTS—to ensure data was successfully transferred and not interrupted by other devices on the network. Frodigh et al., *Wireless ad hoc networking—The art of networking without a network*, Ericsson Review No. 4 ("Frodigh") at 261-62; *see also* Phil Karn, *MACA - A New Channel Access Method for Packet Radio*, The Proceedings of the 9th APRL Computer Networking Conference, at 134-140 (1990); Chatzimisios et al. *Optimisation of RTS/CTS handshake in IEEE 802.11 Wireless LANs for maximum performance*, IEEE Communications Society Globecom 2004 Workshops (2004) at 270. Specifically, in RTS-CTS, "[a] terminal … that wants to send data" does so by completing a "[f]our-way handshake—the sending node sends a request-to-send (RTS) packet to the receiving terminal. If the receiver accepts the request, it replies with a clear-to-send (CTS) packet. If no collisions have occurred, the sender then begins transmitting its data." Frodigh at 262.

- Moreover, such pre-transfer request and acceptance messages were used in file transfer protocols dating back to the 1980s. The specification of the File Transfer Protocol (FTP), for example (published in 1985), specifies that the user device sends a "transfer request command" and that when the connection is established with the server device, "the server-PI sends a confirming reply to the user-PI." Postel et al., RFC 959, File Transfer Protocol ("RFC 959") at 18. Similarly, the specification for the Trivial File Transfer Protocol (TFTP) (published in 1992), specifies that "a transfer is

InterDigital Exhibit 2006, p. 91
Microsoft v. InterDigital
IPR2024-00306

established by sending a request … and receiving a positive reply." K. Sollins, RFC 1350, The TFTP Protocol (Revision 2) ("RFC 1350 Rev 2") at 4.

- A POSITA would have recognized that Ahya and Cheverst, Hinckley, HP H5555, Forutanpour, OBEX Standard references are directed to the same field of wireless data transfer between devices. Further, a POSITA would have recognized the various advantages of sending a message to transfer and receiving an acceptance to transfer message. For example, the references recognize, as discussed above, that a user may not want to receive unwanted and/or unsolicited content, such as malware or spam, and would want to control the files the user receives. A POSITA would have recognized that such desirable security and control would have been provided by implementing a file transfer setup procedure in which the sending device first notifies the receiving device its intent to transfer a file, followed by the receiving device responding with a message to accept or deny the incoming transfer. Furthermore, a POSITA would have also recognized that such exchange of messages are conventional and routine aspects of various data transfer protocols. Therefore, a POSITA would have found it obvious to modify Ahya to implement the teachings of Cheverst, Hinckley, HP H5555, Forutanpour, and/or OBEX Standard to achieve a practical file transfer method according to routine practices in the field, as well as enhance security and user control over wireless file transfer.

- The resulting combination requires no hardware changes to Ahya's device, only minor software changes. Ahya's device already include a display for displaying the accept/deny prompts. Thus, implementing the prompt functionality would have required only minor software changes to the wireless filesharing devices, including: (1) software to notify the receiving device about the transfer (i.e., by sending a message to the receiving device requesting to transfer a selected file); (2) software to, responsive to receiving such a request to transfer message, display a message prompting the user to accept or deny the transfer; (3) software to, upon receiving the user's acceptance, inform the sending device of the acceptance (i.e., by sending an acceptance message) to let it know when it is allowed to start sending selected file; and (4) software to send the selected file to the receiving device upon receiving the acceptance message from the receiving device.
- Implementing these messages (e.g., using Bluetooth, or Wi-Fi, or both) would have been obvious to a POSITA given that such pre-transfer messages were commonly utilized in many file transfer protocols, including Bluetooth's OBEX Put operation, FTP, TFTP, and RTS-CTS as discussed above. A POSITA would have had reasonable expectation of success in implementing this minor software modification to Ahya's device at least because it was well within the programming skill of a POSITA.
- Aholainen, Chouraki, and Johanson each discloses allowing a user to filter which detected devices are displayed based on various criteria: Aholainen

InterDigital Exhibit 2006, p. 93
Microsoft v. InterDigital
IPR2024-00306

based on type / class of device (Aholainen at Abstract, 1:28-33, 2:45-54, 5:21-6:3, 7:6-23, 13:19-27, 15:20-55, 16:7-10, 17:39-41 (claim 17), FIGS 2-3A), Chouraki based on relationship with the device (friend vs. neutral vs. blacklist) (Chouraki, 38:9-15), and Johanson based on distance (Johanson, [0020], claim 3). A POSITA would have been motivated to incorporate each of these filtering functionalities because each provides a streamlined list of detected devices, allowing the user to quickly select a desired recipient without being inundated with too many options. E.g., Aholainen, 2:45-48 (filtering the list of available Bluetooth devices beneficially reduces the user being "inundate[d]" with "information about those Bluetooth devices that he/she wishes to ignore").

- A POSITA would have been motivated to implement Aholainen's filtering functionality in the Ahya devices to allow the user to customize which types of detected devices are displayed so that the user is not inundated with unwanted options, as taught by Aholainen. Aholainen at 2:45-48, 16:7-10. For example, someone who never uses vending machines may not want vending machines cluttering the list of available devices. Similarly, someone who primarily uses their mobile phone to share photos with friends may want to see only mobile phones. A POSITA would have been motivated to implement Chouraki's filtering functionality in the Ahya devices to streamline the list of displayed devices, as taught by Chouraki, prioritize and more easily facilitate interactions with friends, help avoid sending personal information to mere acquaintances ("Neutral"

individuals), and avoid seeing or communicating with individuals the user did not want to see or communicate with ("Blacklist[ed]" individuals). Chouraki at 27:1-10, 23:17-19. By their very nature, "friend" and "blacklist" reflect what was well-known and common-sense: users regularly share things with their friends and often wish to not engage with certain "blacklisted" users when sharing content. Reading these passages in Chouraki, a POSITA would have understood the benefits of this filtering functionality: avoiding unwanted interactions with those on a blacklist and allowing the user to prioritize and more easily facilitate interactions with friends. A POSITA would have been motivated to implement a distance-based filtering functionality in the Ahya devices to "make[] it easy to select a nearby wireless electronic device[] to communicate with," and mitigate the issues encountered in crowded mobile environment, as taught by Johanson. Johanson at [0002-0006], [0020]. For example, if two users next to one another in a crowded area want to share photos with each other, they would face less difficulty selecting each other's devices if the displayed devices were limited to a smaller area.

- Cheverst in view of McKillop, Burns, Asano, Hoddie, OBEX Standard, Hinckley, HP H5555, Forutanpour, Frodigh, Turner, Aholainen, Chouraki, Johanson, and/or knowledge of a POSITA. In addition to the motivations identified above, a POSITA would have had ample reason to combine Cheverst with each of these references for a variety of reasons.

InterDigital Exhibit 2006, p. 95
Microsoft v. InterDigital
IPR2024-00306

- A POSITA would have been motivated to combine Cheverst's wireless filesharing devices and methods with McKillop, Burns, Forutanpour, Asano, and/or Hoddie that teaches using Bluetooth for discovering devices followed by using WiFi to transfer data, because they are all directed to the same field of wireless data transfer between devices.
- McKillop, Burns, Forutanpour, Asano, and Hoddie disclose wirelessly connected electronic devices that communicate with one another using wireless communication protocols, such as Bluetooth and/or Wi-Fi. Like Cheverst, these references also disclose using Bluetooth to detect other devices. Furthermore, these references identify various advantages of combining discovery using Bluetooth with transfer using WiFi. For example, the references recognize, as discussed in the claim chart, that while Bluetooth is good at wirelessly detecting other target devices for file transfer, Bluetooth is relatively slow. *See, e.g.*, Burns at [0020]. The references further recognize that 802.11 WiFi provides superior transfer speed over Bluetooth. *See, e.g.*, McKillop at [0003]. However, the references recognize that because WiFi consumes more power compared to Bluetooth leading to short battery life, persistent use of WiFi is not necessarily desirable. *See id.* In light of these various advantages recognized by the prior art, a POSITA would have found it obvious to modify the methods and systems of Cheverst to perform device discovery using Bluetooth (as already done by Cheverst), then switch to WiFi for the transfer of data as taught by McKillop, Burns, Forutanpour, Asano, and

Hoddie to achieve the benefits described above, such as improved speed and power consumption without other noticeable difference in the user's filesharing experience.

- Other references also disclose combining Bluetooth discovery with WiFi transfer. For example, U.S. Patent Publication No. 2007/013504 ("Kapur") recognizes strengths of Bluetooth include "a ubiquitous presence, [and] a sophisticated device discovery mechanism" but has a "data rate that is relatively low compared to LAN technologies, such as 802.11." Kapur at [0022]. As a solution, Kapur discloses that "[a]fter the Bluetooth® device 1002 discovers the Bluetooth® device 1004, the Bluetooth® protocol stack within the Bluetooth® device 1002 may configure the high-speed data connection 1008," which includes an 802.11 (Wi-Fi) connection. *Id.* at [0065]-[0066]; *see also id*. at [0022], [0029]. As another example, U.S. Patent Publication No. 2009/0034498 ("Banerjea") discloses that "a Bluetooth connection (BT connection) 110 may be established between the mobile communication devices" and then "[m]ultimedia data may be transmitted over the WiFi connection." Banerjea at [0026]-[0027]; *see also id*. at Abstract, [0008]-[0010], [0037]-[0047]. As yet another example, U.S. Patent Publication No. 2009/0215398 ("Adler") discloses "establishing a first connection between a first device and a second device with a first networking standard," such as Bluetooth, and then "transferring data between the first and second devices using [a] second networking standard,"

InterDigital Exhibit 2006, p. 97
Microsoft v. InterDigital
IPR2024-00306

such as Wi-Fi. Adler at [0006]-[0008]; *see also id*. at Abstract, [0038]-[0056], claim 5.

- Furthermore, in 2008 prior to the '933 and '054 patents' priority date, the wireless communications industry already recognized the need and benefit of using Bluetooth for discovery and WiFi for transferring data, and was in the process of implementing and standardizing one such technology. For example, the Bluetooth Special Interest Group (SIG) in charge of developing the Bluetooth standards issued a press release on February 11, 2008 describing an architecture under development called "Alternate MAC/PHY," which "tak[es] classic Bluetooth connections – using Bluetooth protocols, profiles, security and other architectural elements – and allow[s] it to jump on top of the already present 802.11 radio, when necessary, to send bulky entertainment data, faster." https://web.archive.org/web/20080214091219/http:/www.bluetooth.com/Bluetooth/Press/SIG/BLUETOOTH_TECHNOLOGY_TO_HARNESS_THE_SPEED_OF_80211.htm. Dr. Foley, the executive director of Bluetooth SIG, characterized this architecture "the wireless technology equivalent of 'low hanging fruit'." *Id.* The press release elaborated that "the SIG will make use of IEEE 802.11," recognizing it as "a technology already present in many of the devices demanding greater speeds." *Id.* A wireless and mobile analyst characterized this architectural development by Bluetooth SIG as "taking a logical step by applying Bluetooth protocols over an existing 802.11 radio to achieve efficient transfers of high data throughput

applications," and noted that "[s]ince Bluetooth and 802.11 already have significant traction in mobile devices, this coupled solution could prove to be an efficient interim solution." *Id.* As another example, a February 12, 2008 Network World article noted that "Bluetooth is turning to a more ubiquitous high-speed wireless technology to help with applications where Bluetooth's own bandwidth (with a theoretical maximum of 3 megabits per second) is insufficient. . . . Alternate MAC/PHY would let a Bluetooth connection use an 802.11x network only when the additional bandwidth was needed; for tasks that can make do with standard Bluetooth speeds, the Bluetooth connection would stop using the Wi-Fi network." https://web.archive.org/web/20080315065054/https:/www.networkworld.com/news/2008/021208-mwc-bluetooth-to-work-with.html. As yet another example, in a May 13, 2008 EE Times Article by Dr. Foley, the executive director of Bluetooth SIG, he noted that "At the heart of Bluetooth high speed technology is the concept of the Generic Alternate MAC/PHY (Generic AMP), an innovative formula for radio substitution that allows the Bluetooth stack to dynamically select the right radio for any job"; "The Generic AMP enables Bluetooth profiles and protocols to take advantage of higher data rates using one or more alternate high speed radio technologies"; "The Bluetooth stack will recognize the need for fast transfer of a large amount of data and automatically assign the 802.11 AMP to the task. When the transfer is completed and high speed is no longer required, the 802.11 radio will be shut down, and the standard Bluetooth radio will activate to

InterDigital Exhibit 2006, p. 99
Microsoft v. InterDigital
IPR2024-00306

maintain the Bluetooth connection"; "Already popular among younger owners of Bluetooth mobile devices who share content with their friends, this use case is currently served by the "Send via Bluetooth" function already implemented on many mobile phones, PCs and PDAs. The scenario's appeal grows with the addition of the 802.11 high speed channel reducing file transfer times by a factor of ten or more"; "the decision to pursue 802.11 as a high speed Bluetooth channel is the logical answer to a clear market need. It simply makes sense to use technology available now to deliver what the market needs now." https://www.eetimes.com/how-bluetooth-and-802-11-will-team-up-to-deliver-high-speed-wireless-connections.

- The resulting combination of Cheverst with one or more McKillop, Burns, Forutanpour, Asano, and /or Hoddie makes no hardware changes to the Cheverst's device, only minor software changes. Cheverst already recognized that multiple wireless communication methods, such as Bluetooth and WiFi, can be implemented on a single device or system. Moreover, Cheverst would still use Bluetooth for any device-to-device interactions prior to actual transfer of content (to save power), as taught by McKillop, Burns, Forutanpour, Asano, and /or Hoddie. Thus, the combination entails making only a minor software modification to switch to Wi-Fi when transferring a file, as taught by the references.
- Cheverst, Hinckley, HP H5555, Forutanpour, Turner, and other references disclose transferring data by first exchanging a series of messages to setup

the data transfer. Hinckley, for example, discloses that "a user sees a thumbnail preview of the image . . . that another user is transmitting, and can choose whether or not to accept it (Yes/No). By selecting No, the receiving user is stopping the transfer of information from the sending device." Hinckley at [0061]; *see also id.* at [0035], [0038], [0058]-[0062], FIG. 3. Cheverst Fig. 6 discloses a prompt to accept or deny incoming data transfer. Cheverst at 49. Forutanpour discloses "transmitting computing device 10 may send a file transmission query to the targeted computing device before transmitting a file. The computing device may receive an authorization response from the targeted computing device." Forutanpour at [0143]. HP H5555 also discloses a prompt to accept or deny incoming data transfer. U.S. Patent Publication No. 2005/0113079 ("Guo") discloses that the receiving device's "processor 10 causes GUI 12 to prompt the user to accept the data file 16." Guo at [0017]. U.K. Patent Publication No. GB 2,439,364 ("Turner") also discloses that such accept/deny functionality was standard in the Bluetooth protocol by at least 2005, when Turner published. Turner at 2 ("Bluetooth does provide various security mechanisms that can be used to prevent unwanted connections to a device and a subsequent infection by malware."). For example, "if a connection does result in some type of file transfer, users can be prompted as to whether they wish to accept such a transfer." *Id.* A POSITA would have recognized that a message to transfer data must be sent by the sending device in order for the receiving device to display a

prompt to accept or deny the incoming data transfer based on reception of the message to transfer data. Indeed, logic requires such a message to transfer in this context, and other references discussed further below show that such message to transfer are standard features of communication protocols. Furthermore, a POSITA would have further recognized that a user input accepting the incoming transfer would cause the receiving device to transmit an acceptance message accepting the request to transfer, which would be received by the sending device and cause the sending device to start wireless transfer of the data. Again, logic requires such an acceptance message to be transmitted and received, and other references discussed further below show that such acceptance message are standard features of communication protocols.

- Various prior art communication protocols disclose a message to transfer followed by an acceptance to transfer. For example, the Infrared Data Association® (IrDA®) Object Exchange Protocol OBEX™ ("OBEX Standard") discloses a file transfer setup procedure involving sending a "request" to transfer a named file to a target device and then sending the file only after receiving a response of "CONTINUE" from the target receiving device. OBEX Standard at 73-74. Furthermore, Bluetooth version 1.1, as specified in Bluetooth Specification Version 1.1, Vol. 2, "Profiles" ("Bluetooth Version 1.1 Vol. 2"), uses the OBEX Put operation described above to transfer a file:

InterDigital Exhibit 2006, p. 102
Microsoft v. InterDigital
IPR2024-00306

5.5 PUSHING DATA TO SERVER

The data object(s) is pushed to the Server using the PUT operation of the OBEX protocol. The data can be sent in one or more OBEX packets. The PUT request must include the following fields and headers:

Field/ Header	Name	Value	Status	Explanation
Field	Opcode for PUT	0x02 or 0x82	M	-
Field	Packet Length	Varies	M	-
Header	ConnectionID	Varies	C1	The header value specifies the current connection to the specific service.
Header	Name	Varies	M	The header value is the name of a single object, object store, or log information.
Header	Body/End of Body	Varies	M	End of Body identifies the last chunk of the object body.

Table 5.9: Fields and Headers in PUT Request

Bluetooth Version 1.1 Vol. 2 at 330. *See also* Bluetooth Version 2.0 Vol. 4 at 181:

2.1 PROFILE STACK

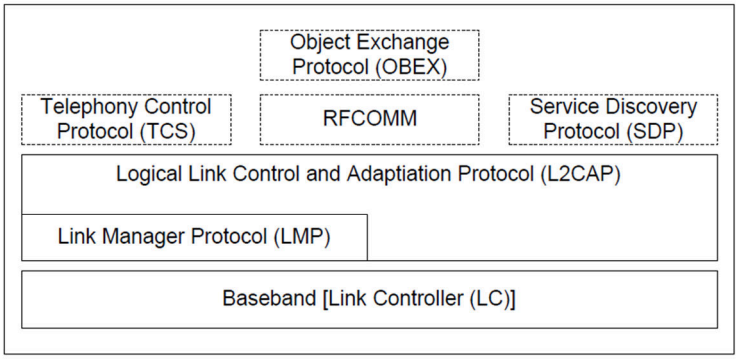

Figure 2.1: Profile stack covered by this profile.

The main purpose of this profile is to describe the use of the lower layers of the Bluetooth protocol stack (LC and LMP). To describe security related alternatives, also higher layers (L2CAP, RFCOMM and OBEX) are included.

- As another example, well known ad hoc (direct, peer-to-peer) Wi-Fi protocols (defined by the distributed coordination function (DCF) mode of

IEEE 802.11) also used similar request and acceptance messages—a four-way handshake known as RTS-CTS—to ensure data was successfully transferred and not interrupted by other devices on the network. Frodigh et al., *Wireless ad hoc networking—The art of networking without a network*, Ericsson Review No. 4 ("Frodigh") at 261-62; *see also* Phil Karn, *MACA – A New Channel Access Method for Packet Radio*, The Proceedings of the 9th APRL Computer Networking Conference, at 134-140 (1990); Chatzimisios et al. *Optimisation of RTS/CTS handshake in IEEE 802.11 Wireless LANs for maximum performance*, IEEE Communications Society Globecom 2004 Workshops (2004) at 270. Specifically, in RTS-CTS, "[a] terminal … that wants to send data" does so by completing a "[f]our-way handshake—the sending node sends a request-to-send (RTS) packet to the receiving terminal. If the receiver accepts the request, it replies with a clear-to-send (CTS) packet. If no collisions have occurred, the sender then begins transmitting its data." Frodigh at 262.

- Moreover, such pre-transfer request and acceptance messages were used in file transfer protocols dating back to the 1980s. The specification of the File Transfer Protocol (FTP), for example (published in 1985), specifies that the user device sends a "transfer request command" and that when the connection is established with the server device, "the server-PI sends a confirming reply to the user-PI." Postel et al., RFC 959, File Transfer Protocol ("RFC 959") at 18. Similarly, the specification for the Trivial File Transfer Protocol (TFTP) (published in 1992), specifies that "a transfer is

InterDigital Exhibit 2006, p. 104
Microsoft v. InterDigital
IPR2024-00306

established by sending a request … and receiving a positive reply." K. Sollins, RFC 1350, The TFTP Protocol (Revision 2) ("RFC 1350 Rev 2") at 4.

- A POSITA would have recognized that Cheverst and Hinckley, Forutanpour, HP H5555, and OBEX Standard references are directed to the same field of wireless data transfer between devices. Further, a POSITA would have recognized the various advantages of sending a message to transfer and receiving an acceptance to transfer message. For example, the references recognize, as discussed above, that a user may not want to receive unwanted and/or unsolicited content, such as malware or spam, and would want to control the files the user receives. A POSITA would have recognized that such desirable security and control would have been provided by implementing a file transfer setup procedure in which the sending device first notifies the receiving device its intent to transfer a file, followed by the receiving device responding with a message to accept or deny the incoming transfer. Furthermore, a POSITA would have also recognized that such exchange of messages are conventional and routine aspects of various data transfer protocols. Therefore, a POSITA would have found it obvious to modify Cheverst to implement the teachings of Hinckley, HP H5555, Forutanpour, and/or OBEX Standard to achieve a practical file transfer method according to routine practices in the field, as well as enhance security and user control over wireless file transfer.

- The resulting combination requires no hardware changes to Cheverst's device, only minor software changes. Cheverst's device already include a display for displaying the accept/deny prompts. Thus, implementing the prompt functionality would have required only minor software changes to the wireless filesharing devices, including: (1) software to notify the receiving device about the transfer (i.e., by sending a message to the receiving device requesting to transfer a selected file); (2) software to, responsive to receiving such a request to transfer message, display a message prompting the user to accept or deny the transfer; (3) software to, upon receiving the user's acceptance, inform the sending device of the acceptance (i.e., by sending an acceptance message) to let it know when it is allowed to start sending selected file; and (4) software to send the selected file to the receiving device upon receiving the acceptance message from the receiving device.
- Implementing these messages (e.g., using Bluetooth, or Wi-Fi, or both) would have been obvious to a POSITA given that such pre-transfer messages were commonly utilized in many file transfer protocols, including Bluetooth's OBEX Put operation, FTP, TFTP, and RTS-CTS as discussed above. A POSITA would have had reasonable expectation of success in implementing this minor software modification to Cheverst's device at least because it was well within the programming skill of a POSITA.
- Aholainen, Chouraki, and Johanson each discloses allowing a user to filter which detected devices are displayed based on various criteria: Aholainen

based on type / class of device (Aholainen at Abstract, 1:28-33, 2:45-54, 5:21-6:3, 7:6-23, 13:19-27, 15:20-55, 16:7-10, 17:39-41 (claim 17), FIGS 2-3A), Chouraki based on relationship with the device (friend vs. neutral vs. blacklist) (Chouraki, 38:9-15), and Johanson based on distance (Johanson, [0020], claim 3). A POSITA would have been motivated to incorporate each of these filtering functionalities because each provides a streamlined list of detected devices, allowing the user to quickly select a desired recipient without being inundated with too many options. E.g., Aholainen, 2:45-48 (filtering the list of available Bluetooth devices beneficially reduces the user being "inundate[d]" with "information about those Bluetooth devices that he/she wishes to ignore").

- A POSITA would have been motivated to implement Aholainen's filtering functionality in the Cheverst devices to allow the user to customize which types of detected devices are displayed so that the user is not inundated with unwanted options, as taught by Aholainen. Aholainen at 2:45-48, 16:7-10. For example, someone who never uses vending machines may not want vending machines cluttering the list of available devices. Similarly, someone who primarily uses their mobile phone to share photos with friends may want to see only mobile phones. A POSITA would have been motivated to implement Chouraki's filtering functionality in the Cheverst devices to streamline the list of displayed devices, as taught by Chouraki, prioritize and more easily facilitate interactions with friends, help avoid sending personal information to mere acquaintances ("Neutral"

individuals), and avoid seeing or communicating with individuals the user did not want to see or communicate with ("Blacklist[ed]" individuals). Chouraki at 27:1-10, 23:17-19. By their very nature, "friend" and "blacklist" reflect what was well-known and common-sense: users regularly share things with their friends and often wish to not engage with certain "blacklisted" users when sharing content. Reading these passages in Chouraki, a POSITA would have understood the benefits of this filtering functionality: avoiding unwanted interactions with those on a blacklist and allowing the user to prioritize and more easily facilitate interactions with friends. A POSITA would have been motivated to implement a distance-based filtering functionality in the Cheverst devices to "make[] it easy to select a nearby wireless electronic device[] to communicate with," and mitigate the issues encountered in crowded mobile environment, as taught by Johanson. Johanson at [0002-0006], [0020]. For example, if two users next to one another in a crowded area want to share photos with each other, they would face less difficulty selecting each other's devices if the displayed devices were limited to a smaller area.

- Hoddie in view of Sony PEG-50, McKillop, Burns, Asano, OBEX Standard, Cheverst, Hinckley, HP H5555, Forutanpour, Frodigh, Turner, Aholainen, Chouraki, Johanson, and/or knowledge of a POSITA. In addition to the motivations identified above, a POSITA would have had ample reason to combine Hoddie with each of these references for a variety of reasons.

- A POSITA would have been motivated to combine Hoddie's wireless filesharing devices and methods with McKillop, Burns, Forutanpour, and/or Asano that teaches using Bluetooth for discovering devices followed by using WiFi to transfer data, because they are all directed to the same field of wireless data transfer between devices.
- McKillop, Burns, Forutanpour, and Asano, disclose wirelessly connected electronic devices that communicate with one another using wireless communication protocols, such as Bluetooth and/or Wi-Fi. Like Hoddie, these references also disclose using Bluetooth to detect other devices. Furthermore, these references identify various advantages of combining discovery using Bluetooth with transfer using WiFi. For example, the references recognize, as discussed in the claim chart, that while Bluetooth is good at wirelessly detecting other target devices for file transfer, Bluetooth is relatively slow. *See, e.g.*, Burns at [0020]. The references further recognize that 802.11 WiFi provides superior transfer speed over Bluetooth. *See, e.g.*, McKillop at [0003]. However, the references recognize that because WiFi consumes more power compared to Bluetooth leading to short battery life, persistent use of WiFi is not necessarily desirable. *See id.* In light of these various advantages recognized by the prior art, a POSITA would have found it obvious to modify the methods and systems of Hoddie to perform device discovery using Bluetooth (as already done by Hoddie), then switch to WiFi for the transfer of data as taught by McKillop, Burns, Forutanpour, Asano to achieve the benefits

InterDigital Exhibit 2006, p. 109
Microsoft v. InterDigital
IPR2024-00306

described above, such as improved speed and power consumption without other noticeable difference in the user's filesharing experience.

- Other references also disclose combining Bluetooth discovery with WiFi transfer. For example, U.S. Patent Publication No. 2007/013504 ("Kapur") recognizes strengths of Bluetooth include "a ubiquitous presence, [and] a sophisticated device discovery mechanism" but has a "data rate that is relatively low compared to LAN technologies, such as 802.11." Kapur at [0022]. As a solution, Kapur discloses that "[a]fter the Bluetooth® device 1002 discovers the Bluetooth® device 1004, the Bluetooth® protocol stack within the Bluetooth® device 1002 may configure the high-speed data connection 1008," which includes an 802.11 (Wi-Fi) connection. *Id.* at [0065]-[0066]; *see also id*. at [0022], [0029]. As another example, U.S. Patent Publication No. 2009/0034498 ("Banerjea") discloses that "a Bluetooth connection (BT connection) 110 may be established between the mobile communication devices" and then "[m]ultimedia data may be transmitted over the WiFi connection." Banerjea at [0026]-[0027]; *see also id*. at Abstract, [0008]-[0010], [0037]-[0047]. As yet another example, U.S. Patent Publication No. 2009/0215398 ("Adler") discloses "establishing a first connection between a first device and a second device with a first networking standard," such as Bluetooth, and then "transferring data between the first and second devices using [a] second networking standard," such as Wi-Fi. Adler at [0006]-[0008]; *see also id*. at Abstract, [0038]-[0056], claim 5.

- Furthermore, in 2008 prior to the ’933 and ’054 patents’ priority date, the wireless communications industry already recognized the need and benefit of using Bluetooth for discovery and WiFi for transferring data, and was in the process of implementing and standardizing one such technology. For example, the Bluetooth Special Interest Group (SIG) in charge of developing the Bluetooth standards issued a press release on February 11, 2008 describing an architecture under development called “Alternate MAC/PHY,” which “tak[es] classic Bluetooth connections – using Bluetooth protocols, profiles, security and other architectural elements – and allow[s] it to jump on top of the already present 802.11 radio, when necessary, to send bulky entertainment data, faster.” https://web.archive.org/web/20080214091219/http:/www.bluetooth.com/Bluetooth/Press/SIG/BLUETOOTH_TECHNOLOGY_TO_HARNESS_THE_SPEED_OF_80211.htm. Dr. Foley, the executive director of Bluetooth SIG, characterized this architecture “the wireless technology equivalent of ‘low hanging fruit’.” *Id.* The press release elaborated that “the SIG will make use of IEEE 802.11,” recognizing it as “a technology already present in many of the devices demanding greater speeds.” *Id.* A wireless and mobile analyst characterized this architectural development by Bluetooth SIG as “taking a logical step by applying Bluetooth protocols over an existing 802.11 radio to achieve efficient transfers of high data throughput applications,” and noted that “[s]ince Bluetooth and 802.11 already have significant traction in mobile devices, this coupled solution could prove to

be an efficient interim solution." *Id.* As another example, a February 12, 2008 Network World article noted that "Bluetooth is turning to a more ubiquitous high-speed wireless technology to help with applications where Bluetooth's own bandwidth (with a theoretical maximum of 3 megabits per second) is insufficient. . . . Alternate MAC/PHY would let a Bluetooth connection use an 802.11x network only when the additional bandwidth was needed; for tasks that can make do with standard Bluetooth speeds, the Bluetooth connection would stop using the Wi-Fi network." https://web.archive.org/web/20080315065054/https:/www.networkworld.com/news/2008/021208-mwc-bluetooth-to-work-with.html. As yet another example, in a May 13, 2008 EE Times Article by Dr. Foley, the executive director of Bluetooth SIG, he noted that "At the heart of Bluetooth high speed technology is the concept of the Generic Alternate MAC/PHY (Generic AMP), an innovative formula for radio substitution that allows the Bluetooth stack to dynamically select the right radio for any job"; "The Generic AMP enables Bluetooth profiles and protocols to take advantage of higher data rates using one or more alternate high speed radio technologies"; "The Bluetooth stack will recognize the need for fast transfer of a large amount of data and automatically assign the 802.11 AMP to the task. When the transfer is completed and high speed is no longer required, the 802.11 radio will be shut down, and the standard Bluetooth radio will activate to maintain the Bluetooth connection"; "Already popular among younger owners of Bluetooth mobile devices who share content with their friends,

this use case is currently served by the "Send via Bluetooth" function already implemented on many mobile phones, PCs and PDAs. The scenario's appeal grows with the addition of the 802.11 high speed channel reducing file transfer times by a factor of ten or more"; "the decision to pursue 802.11 as a high speed Bluetooth channel is the logical answer to a clear market need. It simply makes sense to use technology available now to deliver what the market needs now." https://www.eetimes.com/how-bluetooth-and-802-11-will-team-up-to-deliver-high-speed-wireless-connections.

- The resulting combination of Hoddie with one or more McKillop, Burns, Forutanpour, and/or Asano makes no hardware changes to the Hoddie's device, only minor software changes. Hoddie already recognized that multiple wireless communication methods, such as Bluetooth and WiFi, can be implemented on a single device or system. Moreover, Hoddie would still use Bluetooth for any device-to-device interactions prior to actual transfer of content (to save power), as taught by McKillop, Burns, Forutanpour, Asano, and /or Hoddie. Thus, the combination entails making only a minor software modification to switch to Wi-Fi when transferring a file, as taught by the references.
- Cheverst, Hinckley, HP H5555, Forutanpour, Turner, and other references disclose transferring data by first exchanging a series of messages to setup the data transfer. Hinckley, for example, discloses that "a user sees a thumbnail preview of the image . . . that another user is transmitting, and

InterDigital Exhibit 2006, p. 113
Microsoft v. InterDigital
IPR2024-00306

can choose whether or not to accept it (Yes/No). By selecting No, the receiving user is stopping the transfer of information from the sending device." Hinckley at [0061]; *see also id.* at [0035], [0038], [0058]-[0062], FIG. 3. Cheverst Fig. 6 discloses a prompt to accept or deny incoming data transfer. Cheverst at 49. Forutanpour discloses "transmitting computing device 10 may send a file transmission query to the targeted computing device before transmitting a file. The computing device may receive an authorization response from the targeted computing device." Forutanpour at [0143]. HP H5555 also discloses a prompt to accept or deny incoming data transfer. U.S. Patent Publication No. 2005/0113079 ("Guo") discloses that the receiving device's "processor 10 causes GUI 12 to prompt the user to accept the data file 16." Guo at [0017]. U.K. Patent Publication No. GB 2,439,364 ("Turner") also discloses that such accept/deny functionality was standard in the Bluetooth protocol by at least 2005, when Turner published. Turner at 2 ("Bluetooth does provide various security mechanisms that can be used to prevent unwanted connections to a device and a subsequent infection by malware."). For example, "if a connection does result in some type of file transfer, users can be prompted as to whether they wish to accept such a transfer." *Id.* A POSITA would have recognized that a message to transfer data must be sent by the sending device in order for the receiving device to display a prompt to accept or deny the incoming data transfer based on reception of the message to transfer data. Indeed, logic requires such a message to

transfer in this context, and other references discussed further below show that such message to transfer are standard features of communication protocols. Furthermore, a POSITA would have further recognized that a user input accepting the incoming transfer would cause the receiving device to transmit an acceptance message accepting the request to transfer, which would be received by the sending device and cause the sending device to start wireless transfer of the data. Again, logic requires such an acceptance message to be transmitted and received, and other references discussed further below show that such acceptance message are standard features of communication protocols.

- Various prior art communication protocols disclose a message to transfer followed by an acceptance to transfer. For example, the Infrared Data Association® (IrDA®) Object Exchange Protocol OBEX™ ("OBEX Standard") discloses a file transfer setup procedure involving sending a "request" to transfer a named file to a target device and then sending the file only after receiving a response of "CONTINUE" from the target receiving device. OBEX Standard at 73-74. Furthermore, Bluetooth version 1.1, as specified in Bluetooth Specification Version 1.1, Vol. 2, "Profiles" ("Bluetooth Version 1.1 Vol. 2"), uses the OBEX Put operation described above to transfer a file:

InterDigital Exhibit 2006, p. 115
Microsoft v. InterDigital
IPR2024-00306

5.5 PUSHING DATA TO SERVER

The data object(s) is pushed to the Server using the PUT operation of the OBEX protocol. The data can be sent in one or more OBEX packets. The PUT request must include the following fields and headers:

Field/ Header	Name	Value	Status	Explanation
Field	Opcode for PUT	0x02 or 0x82	M	-
Field	Packet Length	Varies	M	-
Header	ConnectionID	Varies	C1	The header value specifies the current connection to the specific service.
Header	Name	Varies	M	The header value is the name of a single object, object store, or log information.
Header	Body/End of Body	Varies	M	End of Body identifies the last chunk of the object body.

Table 5.9: Fields and Headers in PUT Request

Bluetooth Version 1.1 Vol. 2 at 330. *See also* Bluetooth Version 2.0 Vol. 4 at 181:

2.1 PROFILE STACK

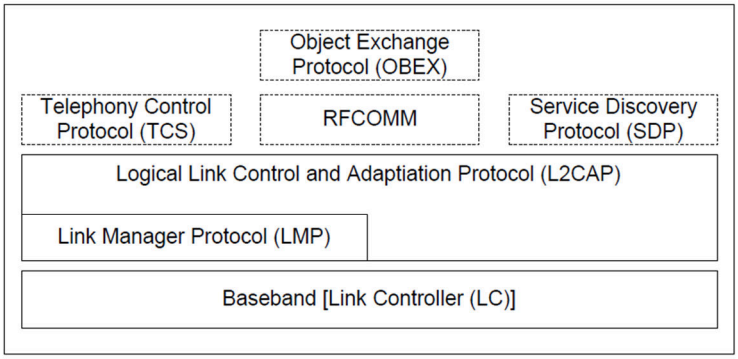

Figure 2.1: Profile stack covered by this profile.

The main purpose of this profile is to describe the use of the lower layers of the Bluetooth protocol stack (LC and LMP). To describe security related alternatives, also higher layers (L2CAP, RFCOMM and OBEX) are included.

- As another example, well known ad hoc (direct, peer-to-peer) Wi-Fi protocols (defined by the distributed coordination function (DCF) mode of

IEEE 802.11) also used similar request and acceptance messages—a four-way handshake known as RTS-CTS—to ensure data was successfully transferred and not interrupted by other devices on the network. Frodigh et al., *Wireless ad hoc networking—The art of networking without a network*, Ericsson Review No. 4 ("Frodigh") at 261-62; *see also* Phil Karn, *MACA - A New Channel Access Method for Packet Radio*, The Proceedings of the 9th APRL Computer Networking Conference, at 134-140 (1990); Chatzimisios et al. *Optimisation of RTS/CTS handshake in IEEE 802.11 Wireless LANs for maximum performance*, IEEE Communications Society Globecom 2004 Workshops (2004) at 270. Specifically, in RTS-CTS, "[a] terminal … that wants to send data" does so by completing a "[f]our-way handshake—the sending node sends a request-to-send (RTS) packet to the receiving terminal. If the receiver accepts the request, it replies with a clear-to-send (CTS) packet. If no collisions have occurred, the sender then begins transmitting its data." Frodigh at 262.

- Moreover, such pre-transfer request and acceptance messages were used in file transfer protocols dating back to the 1980s. The specification of the File Transfer Protocol (FTP), for example (published in 1985), specifies that the user device sends a "transfer request command" and that when the connection is established with the server device, "the server-PI sends a confirming reply to the user-PI." Postel et al., RFC 959, File Transfer Protocol ("RFC 959") at 18. Similarly, the specification for the Trivial File Transfer Protocol (TFTP) (published in 1992), specifies that "a transfer is

InterDigital Exhibit 2006, p. 117
Microsoft v. InterDigital
IPR2024-00306

established by sending a request … and receiving a positive reply." K. Sollins, RFC 1350, The TFTP Protocol (Revision 2) ("RFC 1350 Rev 2") at 4.

- A POSITA would have recognized that Hoddie and Cheverst, Hinckley, HP H5555, Forutanpour, OBEX Standard references are directed to the same field of wireless data transfer between devices. Further, a POSITA would have recognized the various advantages of sending a message to transfer and receiving an acceptance to transfer message. For example, the references recognize, as discussed above, that a user may not want to receive unwanted and/or unsolicited content, such as malware or spam, and would want to control the files the user receives. A POSITA would have recognized that such desirable security and control would have been provided by implementing a file transfer setup procedure in which the sending device first notifies the receiving device its intent to transfer a file, followed by the receiving device responding with a message to accept or deny the incoming transfer. Furthermore, a POSITA would have also recognized that such exchange of messages are conventional and routine aspects of various data transfer protocols. Therefore, a POSITA would have found it obvious to modify Hoddie to implement the teachings of Cheverst, Hinckley, HP H5555, Forutanpour, and/or OBEX Standard to achieve a practical file transfer method according to routine practices in the field, as well as enhance security and user control over wireless file transfer.

- The resulting combination requires no hardware changes to Hoddie's device, only minor software changes. Hoddie's device already include a display for displaying the accept/deny prompts. Thus, implementing the prompt functionality would have required only minor software changes to the wireless filesharing devices, including: (1) software to notify the receiving device about the transfer (i.e., by sending a message to the receiving device requesting to transfer a selected file); (2) software to, responsive to receiving such a request to transfer message, display a message prompting the user to accept or deny the transfer; (3) software to, upon receiving the user's acceptance, inform the sending device of the acceptance (i.e., by sending an acceptance message) to let it know when it is allowed to start sending selected file; and (4) software to send the selected file to the receiving device upon receiving the acceptance message from the receiving device.
- Implementing these messages (e.g., using Bluetooth, or Wi-Fi, or both) would have been obvious to a POSITA given that such pre-transfer messages were commonly utilized in many file transfer protocols, including Bluetooth's OBEX Put operation, FTP, TFTP, and RTS-CTS as discussed above. A POSITA would have had reasonable expectation of success in implementing this minor software modification to Hoddie's device at least because it was well within the programming skill of a POSITA.
- A POSITA would have also recognized that Hoddie's devices may be a touchscreen device, such as Sony PEG-50 or other Sony CLIE line of

devices, because Hoddie provides exemplary devices such as "a PDA (a personal digital assistant, such as the CLIE™ by Sony Corporation)." Hoddie at 3. A POSITA would have known that Sony CLIE devices are touchscreen devices.

- Aholainen, Chouraki, and Johanson each discloses allowing a user to filter which detected devices are displayed based on various criteria: Aholainen based on type / class of device (Aholainen at Abstract, 1:28-33, 2:45-54, 5:21-6:3, 7:6-23, 13:19-27, 15:20-55, 16:7-10, 17:39-41 (claim 17), FIGS 2-3A), Chouraki based on relationship with the device (friend vs. neutral vs. blacklist) (Chouraki, 38:9-15), and Johanson based on distance (Johanson, [0020], claim 3). A POSITA would have been motivated to incorporate each of these filtering functionalities because each provides a streamlined list of detected devices, allowing the user to quickly select a desired recipient without being inundated with too many options. E.g., Aholainen, 2:45-48 (filtering the list of available Bluetooth devices beneficially reduces the user being "inundate[d]" with "information about those Bluetooth devices that he/she wishes to ignore").
- A POSITA would have been motivated to implement Aholainen's filtering functionality in the Hoddie devices to allow the user to customize which types of detected devices are displayed so that the user is not inundated with unwanted options, as taught by Aholainen. Aholainen at 2:45-48, 16:7-10. For example, someone who never uses vending machines may not want vending machines cluttering the list of available devices. Similarly,

someone who primarily uses their mobile phone to share photos with friends may want to see only mobile phones. A POSITA would have been motivated to implement Chouraki's filtering functionality in the Hoddie devices to streamline the list of displayed devices, as taught by Chouraki, prioritize and more easily facilitate interactions with friends, help avoid sending personal information to mere acquaintances ("Neutral" individuals), and avoid seeing or communicating with individuals the user did not want to see or communicate with ("Blacklist[ed]" individuals). Chouraki at 27:1-10, 23:17-19. By their very nature, "friend" and "blacklist" reflect what was well-known and common-sense: users regularly share things with their friends and often wish to not engage with certain "blacklisted" users when sharing content. Reading these passages in Chouraki, a POSITA would have understood the benefits of this filtering functionality: avoiding unwanted interactions with those on a blacklist and allowing the user to prioritize and more easily facilitate interactions with friends. A POSITA would have been motivated to implement a distance-based filtering functionality in the Hoddie devices to "make[] it easy to select a nearby wireless electronic device[] to communicate with," and mitigate the issues encountered in crowded mobile environment, as taught by Johanson. Johanson at [0002-0006], [0020]. For example, if two users next to one another in a crowded area want to share photos with each other, they would face less difficulty selecting each other's devices if the displayed devices were limited to a smaller area.

InterDigital Exhibit 2006, p. 121
Microsoft v. InterDigital
IPR2024-00306

- HP H5555 in view of McKillop, Burns, Asano, Hoddie, OBEX Standard, Cheverst, Hinckley, Forutanpour, Frodigh, Turner, Aholainen, Chouraki, Johanson, and/or knowledge of a POSITA. In addition to the motivations identified above, a POSITA would have had ample reason to combine HP H5555 with each of these references for a variety of reasons.
    - A POSITA would have been motivated to combine HP H5555's wireless filesharing devices and methods with McKillop, Burns, Forutanpour, Asano, and/or Hoddie that teaches using Bluetooth for discovering devices followed by using WiFi to transfer data, because they are all directed to the same field of wireless data transfer between devices.
    - McKillop, Burns, Forutanpour, Asano, and Hoddie disclose wirelessly connected electronic devices that communicate with one another using wireless communication protocols, such as Bluetooth and/or Wi-Fi. Like HP H5555, these references also disclose using Bluetooth to detect other devices. Furthermore, these references identify various advantages of combining discovery using Bluetooth with transfer using WiFi. For example, the references recognize, as discussed in the claim chart, that while Bluetooth is good at wirelessly detecting other target devices for file transfer, Bluetooth is relatively slow. *See, e.g.*, Burns at [0020]. The references further recognize that 802.11 WiFi provides superior transfer speed over Bluetooth. *See, e.g.*, McKillop at [0003]. However, the references recognize that because WiFi consumes more power compared to Bluetooth leading to short battery life, persistent use of WiFi is not

necessarily desirable. *See id.* In light of these various advantages recognized by the prior art, a POSITA would have found it obvious to modify the methods and systems of HP H5555 to perform device discovery using Bluetooth (as already done by HP H5555), then switch to WiFi for the transfer of data as taught by McKillop, Burns, Forutanpour, Asano, and Hoddie to achieve the benefits described above, such as improved speed and power consumption without other noticeable difference in the user's filesharing experience.

- Other references also disclose combining Bluetooth discovery with WiFi transfer. For example, U.S. Patent Publication No. 2007/013504 ("Kapur") recognizes strengths of Bluetooth include "a ubiquitous presence, [and] a sophisticated device discovery mechanism" but has a "data rate that is relatively low compared to LAN technologies, such as 802.11." Kapur at [0022]. As a solution, Kapur discloses that "[a]fter the Bluetooth® device 1002 discovers the Bluetooth® device 1004, the Bluetooth® protocol stack within the Bluetooth® device 1002 may configure the high-speed data connection 1008," which includes an 802.11 (Wi-Fi) connection. *Id.* at [0065]-[0066]; *see also id*. at [0022], [0029]. As another example, U.S. Patent Publication No. 2009/0034498 ("Banerjea") discloses that "a Bluetooth connection (BT connection) 110 may be established between the mobile communication devices" and then "[m]ultimedia data may be transmitted over the WiFi connection." Banerjea at [0026]-[0027]; *see also id*. at Abstract, [0008]-[0010], [0037]-[0047]. As yet another example, U.S.

Patent Publication No. 2009/0215398 ("Adler") discloses "establishing a first connection between a first device and a second device with a first networking standard," such as Bluetooth, and then "transferring data between the first and second devices using [a] second networking standard," such as Wi-Fi. Adler at [0006]-[0008]; *see also id*. at Abstract, [0038]-[0056], claim 5.

- Furthermore, in 2008 prior to the '933 and '054 patents' priority date, the wireless communications industry already recognized the need and benefit of using Bluetooth for discovery and WiFi for transferring data, and was in the process of implementing and standardizing one such technology. For example, the Bluetooth Special Interest Group (SIG) in charge of developing the Bluetooth standards issued a press release on February 11, 2008 describing an architecture under development called "Alternate MAC/PHY," which "tak[es] classic Bluetooth connections – using Bluetooth protocols, profiles, security and other architectural elements – and allow[s] it to jump on top of the already present 802.11 radio, when necessary, to send bulky entertainment data, faster." https://web.archive.org/web/20080214091219/http:/www.bluetooth.com/Bluetooth/Press/SIG/BLUETOOTH_TECHNOLOGY_TO_HARNESS_THE_SPEED_OF_80211.htm. Dr. Foley, the executive director of Bluetooth SIG, characterized this architecture "the wireless technology equivalent of 'low hanging fruit'." *Id.* The press release elaborated that "the SIG will make use of IEEE 802.11," recognizing it as "a technology already present

in many of the devices demanding greater speeds." *Id.* A wireless and mobile analyst characterized this architectural development by Bluetooth SIG as "taking a logical step by applying Bluetooth protocols over an existing 802.11 radio to achieve efficient transfers of high data throughput applications," and noted that "[s]ince Bluetooth and 802.11 already have significant traction in mobile devices, this coupled solution could prove to be an efficient interim solution." *Id.* As another example, a February 12, 2008 Network World article noted that "Bluetooth is turning to a more ubiquitous high-speed wireless technology to help with applications where Bluetooth's own bandwidth (with a theoretical maximum of 3 megabits per second) is insufficient. . . . Alternate MAC/PHY would let a Bluetooth connection use an 802.11x network only when the additional bandwidth was needed; for tasks that can make do with standard Bluetooth speeds, the Bluetooth connection would stop using the Wi-Fi network." https://web.archive.org/web/20080315065054/https:/www.networkworld.com/news/2008/021208-mwc-bluetooth-to-work-with.html. As yet another example, in a May 13, 2008 EE Times Article by Dr. Foley, the executive director of Bluetooth SIG, he noted that "At the heart of Bluetooth high speed technology is the concept of the Generic Alternate MAC/PHY (Generic AMP), an innovative formula for radio substitution that allows the Bluetooth stack to dynamically select the right radio for any job"; "The Generic AMP enables Bluetooth profiles and protocols to take advantage of higher data rates using one or more alternate high speed radio technologies";

"The Bluetooth stack will recognize the need for fast transfer of a large amount of data and automatically assign the 802.11 AMP to the task. When the transfer is completed and high speed is no longer required, the 802.11 radio will be shut down, and the standard Bluetooth radio will activate to maintain the Bluetooth connection"; "Already popular among younger owners of Bluetooth mobile devices who share content with their friends, this use case is currently served by the "Send via Bluetooth" function already implemented on many mobile phones, PCs and PDAs. The scenario's appeal grows with the addition of the 802.11 high speed channel reducing file transfer times by a factor of ten or more"; "the decision to pursue 802.11 as a high speed Bluetooth channel is the logical answer to a clear market need. It simply makes sense to use technology available now to deliver what the market needs now." https://www.eetimes.com/how-bluetooth-and-802-11-will-team-up-to-deliver-high-speed-wireless-connections.

- The resulting combination of HP H5555 with one or more McKillop, Burns, Forutanpour, Asano, and /or Hoddie makes no hardware changes to HP H5555, only minor software changes. HP H5555 already implemented both Bluetooth and WiFi on a single device. Moreover, HP H5555 would still use Bluetooth for any device-to-device interactions prior to actual transfer of content (to save power), as taught by McKillop, Burns, Forutanpour, Asano, and /or Hoddie. Thus, the combination entails making only a minor

software modification to switch to Wi-Fi when transferring a file, as taught by the references.

- Cheverst, Hinckley, HP H5555, Forutanpour, Turner, and other references disclose transferring data by first exchanging a series of messages to setup the data transfer. Hinckley, for example, discloses that "a user sees a thumbnail preview of the image . . . that another user is transmitting, and can choose whether or not to accept it (Yes/No). By selecting No, the receiving user is stopping the transfer of information from the sending device." Hinckley at [0061]; *see also id.* at [0035], [0038], [0058]-[0062], FIG. 3. Cheverst Fig. 6 discloses a prompt to accept or deny incoming data transfer. Cheverst at 49. Forutanpour discloses "transmitting computing device 10 may send a file transmission query to the targeted computing device before transmitting a file. The computing device may receive an authorization response from the targeted computing device." Forutanpour at [0143]. HP H5555 also discloses a prompt to accept or deny incoming data transfer. U.S. Patent Publication No. 2005/0113079 ("Guo") discloses that the receiving device's "processor 10 causes GUI 12 to prompt the user to accept the data file 16." Guo at [0017]. U.K. Patent Publication No. GB 2,439,364 ("Turner") also discloses that such accept/deny functionality was standard in the Bluetooth protocol by at least 2005, when Turner published. Turner at 2 ("Bluetooth does provide various security mechanisms that can be used to prevent unwanted connections to a device and a subsequent infection by malware."). For

example, "if a connection does result in some type of file transfer, users can be prompted as to whether they wish to accept such a transfer." *Id.* A POSITA would have recognized that a message to transfer data must be sent by the sending device in order for the receiving device to display a prompt to accept or deny the incoming data transfer based on reception of the message to transfer data. Indeed, logic requires such a message to transfer in this context, and other references discussed further below show that such message to transfer are standard features of communication protocols. Furthermore, a POSITA would have further recognized that a user input accepting the incoming transfer would cause the receiving device to transmit an acceptance message accepting the request to transfer, which would be received by the sending device and cause the sending device to start wireless transfer of the data. Again, logic requires such an acceptance message to be transmitted and received, and other references discussed further below show that such acceptance message are standard features of communication protocols.

- Various prior art communication protocols disclose a message to transfer followed by an acceptance to transfer. For example, the Infrared Data Association® (IrDA®) Object Exchange Protocol OBEX™ ("OBEX Standard") discloses a file transfer setup procedure involving sending a "request" to transfer a named file to a target device and then sending the file only after receiving a response of "CONTINUE" from the target receiving device. OBEX Standard at 73-74. Furthermore, Bluetooth

version 1.1, as specified in Bluetooth Specification Version 1.1, Vol. 2, "Profiles" ("Bluetooth Version 1.1 Vol. 2"), uses the OBEX Put operation described above to transfer a file:

BLUETOOTH SPECIFICATION Version 1.1 page 330 of 452

Generic Object Exchange Profile

5.5 PUSHING DATA TO SERVER

The data object(s) is pushed to the Server using the PUT operation of the OBEX protocol. The data can be sent in one or more OBEX packets. The PUT request must include the following fields and headers:

Field/ Header	Name	Value	Status	Explanation
Field	Opcode for PUT	0x02 or 0x82	M	-
Field	Packet Length	Varies	M	-
Header	ConnectionID	Varies	C1	The header value specifies the current connection to the specific service.
Header	Name	Varies	M	The header value is the name of a single object, object store, or log information.
Header	Body/End of Body	Varies	M	End of Body identifies the last chunk of the object body.

Table 5.9: Fields and Headers in PUT Request

Bluetooth Version 1.1 Vol. 2 at 330. *See also* Bluetooth Version 2.0 Vol.

InterDigital Exhibit 2006, p. 129
Microsoft v. InterDigital
IPR2024-00306

4 at 181:

2.1 PROFILE STACK

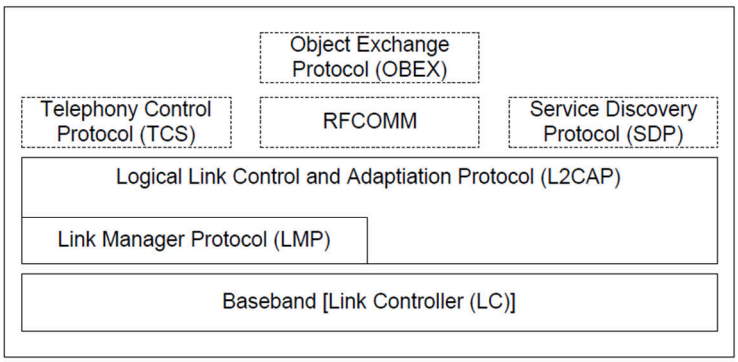

Figure 2.1: Profile stack covered by this profile.

The main purpose of this profile is to describe the use of the lower layers of the Bluetooth protocol stack (LC and LMP). To describe security related alternatives, also higher layers (L2CAP, RFCOMM and OBEX) are included.

- As another example, well known ad hoc (direct, peer-to-peer) Wi-Fi protocols (defined by the distributed coordination function (DCF) mode of IEEE 802.11) also used similar request and acceptance messages—a four-way handshake known as RTS-CTS—to ensure data was successfully transferred and not interrupted by other devices on the network. Frodigh et al., *Wireless ad hoc networking—The art of networking without a network*, Ericsson Review No. 4 ("Frodigh") at 261-62; *see also* Phil Karn, *MACA - A New Channel Access Method for Packet Radio*, The Proceedings of the 9th APRL Computer Networking Conference, at 134-140 (1990); Chatzimisios et al. *Optimisation of RTS/CTS handshake in IEEE 802.11 Wireless LANs for maximum performance*, IEEE Communications Society Globecom 2004 Workshops (2004) at 270. Specifically, in RTS-CTS, "[a] terminal … that wants to send data" does so by completing a "[f]our-way handshake—the sending node sends a request-to-send (RTS) packet to the

receiving terminal. If the receiver accepts the request, it replies with a clear-to-send (CTS) packet. If no collisions have occurred, the sender then begins transmitting its data." Frodigh at 262.

- Moreover, such pre-transfer request and acceptance messages were used in file transfer protocols dating back to the 1980s. The specification of the File Transfer Protocol (FTP), for example (published in 1985), specifies that the user device sends a "transfer request command" and that when the connection is established with the server device, "the server-PI sends a confirming reply to the user-PI." Postel et al., RFC 959, File Transfer Protocol ("RFC 959") at 18. Similarly, the specification for the Trivial File Transfer Protocol (TFTP) (published in 1992), specifies that "a transfer is established by sending a request … and receiving a positive reply." K. Sollins, RFC 1350, The TFTP Protocol (Revision 2) ("RFC 1350 Rev 2") at 4.
- A POSITA would have recognized that HP H5555 and Cheverst, Hinckley, Forutanpour, OBEX Standard references are directed to the same field of wireless data transfer between devices. Further, a POSITA would have recognized the various advantages of sending a message to transfer and receiving an acceptance to transfer message. For example, the references recognize, as discussed above, that a user may not want to receive unwanted and/or unsolicited content, such as malware or spam, and would want to control the files the user receives. A POSITA would have recognized that such desirable security and control would have been provided by

InterDigital Exhibit 2006, p. 131
Microsoft v. InterDigital
IPR2024-00306

implementing a file transfer setup procedure in which the sending device first notifies the receiving device its intent to transfer a file, followed by the receiving device responding with a message to accept or deny the incoming transfer. Furthermore, a POSITA would have also recognized that such exchange of messages are conventional and routine aspects of various data transfer protocols. Therefore, a POSITA would have found it obvious to modify HP H5555 to implement the teachings of Cheverst, Hinckley, Forutanpour, and/or OBEX Standard to achieve a practical file transfer method according to routine practices in the field, as well as enhance security and user control over wireless file transfer.

- The resulting combination requires no hardware changes to HP H5555, only minor software changes. HP H5555 already includes a display for displaying the accept/deny prompts. Thus, implementing the prompt functionality would have required only minor software changes to the wireless filesharing devices, including: (1) software to notify the receiving device about the transfer (i.e., by sending a message to the receiving device requesting to transfer a selected file); (2) software to, responsive to receiving such a request to transfer message, display a message prompting the user to accept or deny the transfer; (3) software to, upon receiving the user's acceptance, inform the sending device of the acceptance (i.e., by sending an acceptance message) to let it know when it is allowed to start sending selected file; and (4) software to send the selected file to the

receiving device upon receiving the acceptance message from the receiving device.

- Implementing these messages (e.g., using Bluetooth, or Wi-Fi, or both) would have been obvious to a POSITA given that such pre-transfer messages were commonly utilized in many file transfer protocols, including Bluetooth's OBEX Put operation, FTP, TFTP, and RTS-CTS as discussed above. A POSITA would have had reasonable expectation of success in implementing this minor software modification to HP H5555 at least because it was well within the programming skill of a POSITA.
- Aholainen, Chouraki, and Johanson each discloses allowing a user to filter which detected devices are displayed based on various criteria: Aholainen based on type / class of device (Aholainen at Abstract, 1:28-33, 2:45-54, 5:21-6:3, 7:6-23, 13:19-27, 15:20-55, 16:7-10, 17:39-41 (claim 17), FIGS 2-3A), Chouraki based on relationship with the device (friend vs. neutral vs. blacklist) (Chouraki, 38:9-15), and Johanson based on distance (Johanson, [0020], claim 3). A POSITA would have been motivated to incorporate each of these filtering functionalities because each provides a streamlined list of detected devices, allowing the user to quickly select a desired recipient without being inundated with too many options. E.g., Aholainen, 2:45-48 (filtering the list of available Bluetooth devices beneficially reduces the user being "inundate[d]" with "information about those Bluetooth devices that he/she wishes to ignore").

InterDigital Exhibit 2006, p. 133
Microsoft v. InterDigital
IPR2024-00306

- A POSITA would have been motivated to implement Aholainen's filtering functionality in the HP H5555 devices to allow the user to customize which types of detected devices are displayed so that the user is not inundated with unwanted options, as taught by Aholainen. Aholainen at 2:45-48, 16:7-10. For example, someone who never uses vending machines may not want vending machines cluttering the list of available devices. Similarly, someone who primarily uses their mobile phone to share photos with friends may want to see only mobile phones. A POSITA would have been motivated to implement Chouraki's filtering functionality in the HP H5555 devices to streamline the list of displayed devices, as taught by Chouraki, prioritize and more easily facilitate interactions with friends, help avoid sending personal information to mere acquaintances ("Neutral" individuals), and avoid seeing or communicating with individuals the user did not want to see or communicate with ("Blacklist[ed]" individuals). Chouraki at 27:1-10, 23:17-19. By their very nature, "friend" and "blacklist" reflect what was well-known and common-sense: users regularly share things with their friends and often wish to not engage with certain "blacklisted" users when sharing content. Reading these passages in Chouraki, a POSITA would have understood the benefits of this filtering functionality: avoiding unwanted interactions with those on a blacklist and allowing the user to prioritize and more easily facilitate interactions with friends. A POSITA would have been motivated to implement a distance-based filtering functionality in the HP H5555 devices to "make[] it easy to

select a nearby wireless electronic device[] to communicate with," and mitigate the issues encountered in crowded mobile environment, as taught by Johanson. Johanson at [0002-0006], [0020]. For example, if two users next to one another in a crowded area want to share photos with each other, they would face less difficulty selecting each other's devices if the displayed devices were limited to a smaller area.

- Sony PEG-50 in view of McKillop, Burns, Asano, Hoddie, OBEX Standard, Cheverst, Hinckley, HP H5555, Forutanpour, Frodigh, Turner, Aholainen, Chouraki, Johanson, and/or knowledge of a POSITA. In addition to the motivations identified above, a POSITA would have had ample reason to combine Sony PEG-50 with each of these references for a variety of reasons.
    - A POSITA would have been motivated to combine Sony PEG-50 wireless filesharing devices and methods with McKillop, Burns, Forutanpour, Asano, and/or Hoddie that teaches using Bluetooth for discovering devices followed by using WiFi to transfer data, because they are all directed to the same field of wireless data transfer between devices.
    - McKillop, Burns, Forutanpour, Asano, and Hoddie disclose wirelessly connected electronic devices that communicate with one another using wireless communication protocols, such as Bluetooth and/or Wi-Fi. Like Sony PEG-50, these references also disclose using Bluetooth to detect other devices. Furthermore, these references identify various advantages of combining discovery using Bluetooth with transfer using WiFi. For example, the references recognize, as discussed in the claim chart, that

while Bluetooth is good at wirelessly detecting other target devices for file transfer, Bluetooth is relatively slow. *See, e.g.*, Burns at [0020]. The references further recognize that 802.11 WiFi provides superior transfer speed over Bluetooth. *See, e.g.*, McKillop at [0003]. However, the references recognize that because WiFi consumes more power compared to Bluetooth leading to short battery life, persistent use of WiFi is not necessarily desirable. *See id.* In light of these various advantages recognized by the prior art, a POSITA would have found it obvious to modify the methods and systems of Sony PEG-50 to perform device discovery using Bluetooth (as already done by Sony PEG-50), then switch to WiFi for the transfer of data as taught by McKillop, Burns, Forutanpour, Asano, and Hoddie to achieve the benefits described above, such as improved speed and power consumption without other noticeable difference in the user's filesharing experience.

- Other references also disclose combining Bluetooth discovery with WiFi transfer. For example, U.S. Patent Publication No. 2007/013504 ("Kapur") recognizes strengths of Bluetooth include "a ubiquitous presence, [and] a sophisticated device discovery mechanism" but has a "data rate that is relatively low compared to LAN technologies, such as 802.11." Kapur at [0022]. As a solution, Kapur discloses that "[a]fter the Bluetooth® device 1002 discovers the Bluetooth® device 1004, the Bluetooth® protocol stack within the Bluetooth® device 1002 may configure the high-speed data connection 1008," which includes an 802.11 (Wi-Fi) connection. *Id.* at

InterDigital Exhibit 2006, p. 136
Microsoft v. InterDigital
IPR2024-00306

[0065]-[0066]; *see also id*. at [0022], [0029]. As another example, U.S. Patent Publication No. 2009/0034498 ("Banerjea") discloses that "a Bluetooth connection (BT connection) 110 may be established between the mobile communication devices" and then "[m]ultimedia data may be transmitted over the WiFi connection." Banerjea at [0026]-[0027]; *see also id*. at Abstract, [0008]-[0010], [0037]-[0047]. As yet another example, U.S. Patent Publication No. 2009/0215398 ("Adler") discloses "establishing a first connection between a first device and a second device with a first networking standard," such as Bluetooth, and then "transferring data between the first and second devices using [a] second networking standard," such as Wi-Fi. Adler at [0006]-[0008]; *see also id*. at Abstract, [0038]-[0056], claim 5.

- Furthermore, in 2008 prior to the '933 and '054 patents' priority date, the wireless communications industry already recognized the need and benefit of using Bluetooth for discovery and WiFi for transferring data, and was in the process of implementing and standardizing one such technology. For example, the Bluetooth Special Interest Group (SIG) in charge of developing the Bluetooth standards issued a press release on February 11, 2008 describing an architecture under development called "Alternate MAC/PHY," which "tak[es] classic Bluetooth connections – using Bluetooth protocols, profiles, security and other architectural elements – and allow[s] it to jump on top of the already present 802.11 radio, when necessary, to send bulky entertainment data, faster."

InterDigital Exhibit 2006, p. 137
Microsoft v. InterDigital
IPR2024-00306

https://web.archive.org/web/20080214091219/http:/www.bluetooth.com/Bluetooth/Press/SIG/BLUETOOTH_TECHNOLOGY_TO_HARNESS_THE_SPEED_OF_80211.htm. Dr. Foley, the executive director of Bluetooth SIG, characterized this architecture "the wireless technology equivalent of 'low hanging fruit'." *Id.* The press release elaborated that "the SIG will make use of IEEE 802.11," recognizing it as "a technology already present in many of the devices demanding greater speeds." *Id.* A wireless and mobile analyst characterized this architectural development by Bluetooth SIG as "taking a logical step by applying Bluetooth protocols over an existing 802.11 radio to achieve efficient transfers of high data throughput applications," and noted that "[s]ince Bluetooth and 802.11 already have significant traction in mobile devices, this coupled solution could prove to be an efficient interim solution." *Id.* As another example, a February 12, 2008 Network World article noted that "Bluetooth is turning to a more ubiquitous high-speed wireless technology to help with applications where Bluetooth's own bandwidth (with a theoretical maximum of 3 megabits per second) is insufficient. . . . Alternate MAC/PHY would let a Bluetooth connection use an 802.11x network only when the additional bandwidth was needed; for tasks that can make do with standard Bluetooth speeds, the Bluetooth connection would stop using the Wi-Fi network." https://web.archive.org/web/20080315065054/https:/www.networkworld.com/news/2008/021208-mwc-bluetooth-to-work-with.html. As yet another example, in a May 13, 2008 EE Times Article by Dr. Foley, the executive

director of Bluetooth SIG, he noted that "At the heart of Bluetooth high speed technology is the concept of the Generic Alternate MAC/PHY (Generic AMP), an innovative formula for radio substitution that allows the Bluetooth stack to dynamically select the right radio for any job"; "The Generic AMP enables Bluetooth profiles and protocols to take advantage of higher data rates using one or more alternate high speed radio technologies"; "The Bluetooth stack will recognize the need for fast transfer of a large amount of data and automatically assign the 802.11 AMP to the task. When the transfer is completed and high speed is no longer required, the 802.11 radio will be shut down, and the standard Bluetooth radio will activate to maintain the Bluetooth connection"; "Already popular among younger owners of Bluetooth mobile devices who share content with their friends, this use case is currently served by the "Send via Bluetooth" function already implemented on many mobile phones, PCs and PDAs. The scenario's appeal grows with the addition of the 802.11 high speed channel reducing file transfer times by a factor of ten or more"; "the decision to pursue 802.11 as a high speed Bluetooth channel is the logical answer to a clear market need. It simply makes sense to use technology available now to deliver what the market needs now." https://www.eetimes.com/how-bluetooth-and-802-11-will-team-up-to-deliver-high-speed-wireless-connections.

- The resulting combination of Sony PEG-50 with one or more McKillop, Burns, Forutanpour, Asano, and /or Hoddie makes no hardware changes to

InterDigital Exhibit 2006, p. 139
Microsoft v. InterDigital
IPR2024-00306

Sony PEG-50, only minor software changes. Sony PEG-50 already implemented Bluetooth and WiFi on a single device. Moreover, Sony PEG-50 would still use Bluetooth for any device-to-device interactions prior to actual transfer of content (to save power), as taught by McKillop, Burns, Forutanpour, Asano, and /or Hoddie. Thus, the combination entails making only a minor software modification to switch to Wi-Fi when transferring a file, as taught by the references.

- Cheverst, Hinckley, HP H5555, Forutanpour, Turner, and other references disclose transferring data by first exchanging a series of messages to setup the data transfer. Hinckley, for example, discloses that "a user sees a thumbnail preview of the image . . . that another user is transmitting, and can choose whether or not to accept it (Yes/No). By selecting No, the receiving user is stopping the transfer of information from the sending device." Hinckley at [0061]; *see also id.* at [0035], [0038], [0058]-[0062], FIG. 3. Cheverst Fig. 6 discloses a prompt to accept or deny incoming data transfer. Cheverst at 49. Forutanpour discloses "transmitting computing device 10 may send a file transmission query to the targeted computing device before transmitting a file. The computing device may receive an authorization response from the targeted computing device." Forutanpour at [0143]. HP H5555 also discloses a prompt to accept or deny incoming data transfer. U.S. Patent Publication No. 2005/0113079 ("Guo") discloses that the receiving device's "processor 10 causes GUI 12 to prompt the user to accept the data file 16." Guo at [0017]. U.K. Patent

Publication No. GB 2,439,364 ("Turner") also discloses that such accept/deny functionality was standard in the Bluetooth protocol by at least 2005, when Turner published. Turner at 2 ("Bluetooth does provide various security mechanisms that can be used to prevent unwanted connections to a device and a subsequent infection by malware."). For example, "if a connection does result in some type of file transfer, users can be prompted as to whether they wish to accept such a transfer." *Id.* A POSITA would have recognized that a message to transfer data must be sent by the sending device in order for the receiving device to display a prompt to accept or deny the incoming data transfer based on reception of the message to transfer data. Indeed, logic requires such a message to transfer in this context, and other references discussed further below show that such message to transfer are standard features of communication protocols. Furthermore, a POSITA would have further recognized that a user input accepting the incoming transfer would cause the receiving device to transmit an acceptance message accepting the request to transfer, which would be received by the sending device and cause the sending device to start wireless transfer of the data. Again, logic requires such an acceptance message to be transmitted and received, and other references discussed further below show that such acceptance message are standard features of communication protocols.

- Various prior art communication protocols disclose a message to transfer followed by an acceptance to transfer. For example, the Infrared Data

Association® (IrDA®) Object Exchange Protocol OBEX™ ("OBEX Standard") discloses a file transfer setup procedure involving sending a "request" to transfer a named file to a target device and then sending the file only after receiving a response of "CONTINUE" from the target receiving device. OBEX Standard at 73-74. Furthermore, Bluetooth version 1.1, as specified in Bluetooth Specification Version 1.1, Vol. 2, "Profiles" ("Bluetooth Version 1.1 Vol. 2"), uses the OBEX Put operation described above to transfer a file:

BLUETOOTH SPECIFICATION Version 1.1 page 330 of 452

Generic Object Exchange Profile Bluetooth™

5.5 PUSHING DATA TO SERVER

The data object(s) is pushed to the Server using the PUT operation of the OBEX protocol. The data can be sent in one or more OBEX packets. The PUT request must include the following fields and headers:

Field/ Header	Name	Value	Status	Explanation
Field	Opcode for PUT	0x02 or 0x82	M	-
Field	Packet Length	Varies	M	-
Header	ConnectionID	Varies	C1	The header value specifies the current connection to the specific service.
Header	Name	Varies	M	The header value is the name of a single object, object store, or log information.
Header	Body/End of Body	Varies	M	End of Body identifies the last chunk of the object body.

Table 5.9: Fields and Headers in PUT Request

Bluetooth Version 1.1 Vol. 2 at 330. *See also* Bluetooth Version 2.0 Vol.

4 at 181:

2.1 PROFILE STACK

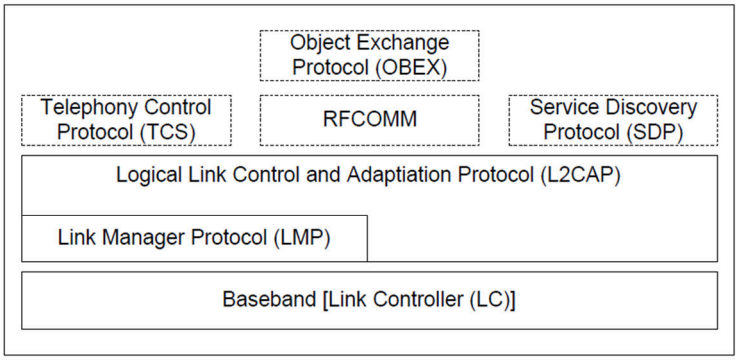

Figure 2.1: Profile stack covered by this profile.

The main purpose of this profile is to describe the use of the lower layers of the Bluetooth protocol stack (LC and LMP). To describe security related alternatives, also higher layers (L2CAP, RFCOMM and OBEX) are included.

- As another example, well known ad hoc (direct, peer-to-peer) Wi-Fi protocols (defined by the distributed coordination function (DCF) mode of IEEE 802.11) also used similar request and acceptance messages—a four-way handshake known as RTS-CTS—to ensure data was successfully transferred and not interrupted by other devices on the network. Frodigh et al., *Wireless ad hoc networking—The art of networking without a network*, Ericsson Review No. 4 ("Frodigh") at 261-62; *see also* Phil Karn, *MACA – A New Channel Access Method for Packet Radio*, The Proceedings of the 9th APRL Computer Networking Conference, at 134-140 (1990); Chatzimisios et al. *Optimisation of RTS/CTS handshake in IEEE 802.11 Wireless LANs for maximum performance*, IEEE Communications Society Globecom 2004 Workshops (2004) at 270. Specifically, in RTS-CTS, "[a] terminal … that wants to send data" does so by completing a "[f]our-way handshake—the sending node sends a request-to-send (RTS) packet to the

receiving terminal. If the receiver accepts the request, it replies with a clear-to-send (CTS) packet. If no collisions have occurred, the sender then begins transmitting its data." Frodigh at 262.

- Moreover, such pre-transfer request and acceptance messages were used in file transfer protocols dating back to the 1980s. The specification of the File Transfer Protocol (FTP), for example (published in 1985), specifies that the user device sends a "transfer request command" and that when the connection is established with the server device, "the server-PI sends a confirming reply to the user-PI." Postel et al., RFC 959, File Transfer Protocol ("RFC 959") at 18. Similarly, the specification for the Trivial File Transfer Protocol (TFTP) (published in 1992), specifies that "a transfer is established by sending a request … and receiving a positive reply." K. Sollins, RFC 1350, The TFTP Protocol (Revision 2) ("RFC 1350 Rev 2") at 4.
- A POSITA would have recognized that Sony PEG-50 and Cheverst, Hinckley, HP H5555, Forutanpour, OBEX Standard references are directed to the same field of wireless data transfer between devices. Further, a POSITA would have recognized the various advantages of sending a message to transfer and receiving an acceptance to transfer message. For example, the references recognize, as discussed above, that a user may not want to receive unwanted and/or unsolicited content, such as malware or spam, and would want to control the files the user receives. A POSITA would have recognized that such desirable security and control would have

InterDigital Exhibit 2006, p. 144
Microsoft v. InterDigital
IPR2024-00306

been provided by implementing a file transfer setup procedure in which the sending device first notifies the receiving device its intent to transfer a file, followed by the receiving device responding with a message to accept or deny the incoming transfer. Furthermore, a POSITA would have also recognized that such exchange of messages are conventional and routine aspects of various data transfer protocols. Therefore, a POSITA would have found it obvious to modify Sony PEG-50 to implement the teachings of Cheverst, Hinckley, HP H5555, Forutanpour, and/or OBEX Standard to achieve a practical file transfer method according to routine practices in the field, as well as enhance security and user control over wireless file transfer.

- The resulting combination requires no hardware changes to Sony PEG-50, only minor software changes. Sony PEG-50 already includes a display for displaying the accept/deny prompts. Thus, implementing the prompt functionality would have required only minor software changes to the wireless filesharing devices, including: (1) software to notify the receiving device about the transfer (i.e., by sending a message to the receiving device requesting to transfer a selected file); (2) software to, responsive to receiving such a request to transfer message, display a message prompting the user to accept or deny the transfer; (3) software to, upon receiving the user's acceptance, inform the sending device of the acceptance (i.e., by sending an acceptance message) to let it know when it is allowed to start sending selected file; and (4) software to send the selected file to the

InterDigital Exhibit 2006, p. 145
Microsoft v. InterDigital
IPR2024-00306

receiving device upon receiving the acceptance message from the receiving device.

- Implementing these messages (e.g., using Bluetooth, or Wi-Fi, or both) would have been obvious to a POSITA given that such pre-transfer messages were commonly utilized in many file transfer protocols, including Bluetooth's OBEX Put operation, FTP, TFTP, and RTS-CTS as discussed above. A POSITA would have had reasonable expectation of success in implementing this minor software modification to Sony PEG-50 at least because it was well within the programming skill of a POSITA.
- Aholainen, Chouraki, and Johanson each discloses allowing a user to filter which detected devices are displayed based on various criteria: Aholainen based on type / class of device (Aholainen at Abstract, 1:28-33, 2:45-54, 5:21-6:3, 7:6-23, 13:19-27, 15:20-55, 16:7-10, 17:39-41 (claim 17), FIGS 2-3A), Chouraki based on relationship with the device (friend vs. neutral vs. blacklist) (Chouraki, 38:9-15), and Johanson based on distance (Johanson, [0020], claim 3). A POSITA would have been motivated to incorporate each of these filtering functionalities because each provides a streamlined list of detected devices, allowing the user to quickly select a desired recipient without being inundated with too many options. E.g., Aholainen, 2:45-48 (filtering the list of available Bluetooth devices beneficially reduces the user being "inundate[d]" with "information about those Bluetooth devices that he/she wishes to ignore").

InterDigital Exhibit 2006, p. 146
Microsoft v. InterDigital
IPR2024-00306

- A POSITA would have been motivated to implement Aholainen's filtering functionality in the Sony PEG-50 devices to allow the user to customize which types of detected devices are displayed so that the user is not inundated with unwanted options, as taught by Aholainen. Aholainen at 2:45-48, 16:7-10. For example, someone who never uses vending machines may not want vending machines cluttering the list of available devices. Similarly, someone who primarily uses their mobile phone to share photos with friends may want to see only mobile phones. A POSITA would have been motivated to implement Chouraki's filtering functionality in the Sony PEG-50 devices to streamline the list of displayed devices, as taught by Chouraki, prioritize and more easily facilitate interactions with friends, help avoid sending personal information to mere acquaintances ("Neutral" individuals), and avoid seeing or communicating with individuals the user did not want to see or communicate with ("Blacklist[ed]" individuals). Chouraki at 27:1-10, 23:17-19. By their very nature, "friend" and "blacklist" reflect what was well-known and common-sense: users regularly share things with their friends and often wish to not engage with certain "blacklisted" users when sharing content. Reading these passages in Chouraki, a POSITA would have understood the benefits of this filtering functionality: avoiding unwanted interactions with those on a blacklist and allowing the user to prioritize and more easily facilitate interactions with friends. A POSITA would have been motivated to implement a distance-based filtering functionality in the Sony PEG-50 devices to "make[] it easy

InterDigital Exhibit 2006, p. 147
Microsoft v. InterDigital
IPR2024-00306

to select a nearby wireless electronic device[] to communicate with," and mitigate the issues encountered in crowded mobile environment, as taught by Johanson. Johanson at [0002-0006], [0020]. For example, if two users next to one another in a crowded area want to share photos with each other, they would face less difficulty selecting each other's devices if the displayed devices were limited to a smaller area.

- Hinckley in view of McKillop, Burns, Asano, Hoddie, OBEX Standard, Cheverst, HP H5555, Forutanpour, Frodigh, Turner, Aholainen, Chouraki, Johanson, and/or knowledge of a POSITA. In addition to the motivations identified above, a POSITA would have had ample reason to combine Hinckley with each of these references for a variety of reasons.
    - A POSITA would have been motivated to combine Hinckley's wireless filesharing devices and methods with McKillop, Burns, Forutanpour, Asano, and/or Hoddie that teaches using Bluetooth for discovering devices followed by using WiFi to transfer data, because they are all directed to the same field of wireless data transfer between devices.
    - McKillop, Burns, Forutanpour, Asano, and Hoddie disclose wirelessly connected electronic devices that communicate with one another using wireless communication protocols, such as Bluetooth and/or Wi-Fi. Like Hinckley, these references also disclose using Bluetooth to detect other devices. Furthermore, these references identify various advantages of combining discovery using Bluetooth with transfer using WiFi. For example, the references recognize, as discussed in the claim chart, that

while Bluetooth is good at wirelessly detecting other target devices for file transfer, Bluetooth is relatively slow. *See, e.g.*, Burns at [0020]. The references further recognize that 802.11 WiFi provides superior transfer speed over Bluetooth. *See, e.g.*, McKillop at [0003]. However, the references recognize that because WiFi consumes more power compared to Bluetooth leading to short battery life, persistent use of WiFi is not necessarily desirable. *See id.* In light of these various advantages recognized by the prior art, a POSITA would have found it obvious to modify the methods and systems of Hinckley to perform device discovery using Bluetooth (as already done by Hinckley), then switch to WiFi for the transfer of data as taught by McKillop, Burns, Forutanpour, Asano, and Hoddie to achieve the benefits described above, such as improved speed and power consumption without other noticeable difference in the user's filesharing experience.

- Other references also disclose combining Bluetooth discovery with WiFi transfer. For example, U.S. Patent Publication No. 2007/013504 ("Kapur") recognizes strengths of Bluetooth include "a ubiquitous presence, [and] a sophisticated device discovery mechanism" but has a "data rate that is relatively low compared to LAN technologies, such as 802.11." Kapur at [0022]. As a solution, Kapur discloses that "[a]fter the Bluetooth® device 1002 discovers the Bluetooth® device 1004, the Bluetooth® protocol stack within the Bluetooth® device 1002 may configure the high-speed data connection 1008," which includes an 802.11 (Wi-Fi) connection. *Id.* at

[0065]-[0066]; *see also id*. at [0022], [0029]. As another example, U.S. Patent Publication No. 2009/0034498 ("Banerjea") discloses that "a Bluetooth connection (BT connection) 110 may be established between the mobile communication devices" and then "[m]ultimedia data may be transmitted over the WiFi connection." Banerjea at [0026]-[0027]; *see also id*. at Abstract, [0008]-[0010], [0037]-[0047]. As yet another example, U.S. Patent Publication No. 2009/0215398 ("Adler") discloses "establishing a first connection between a first device and a second device with a first networking standard," such as Bluetooth, and then "transferring data between the first and second devices using [a] second networking standard," such as Wi-Fi. Adler at [0006]-[0008]; *see also id*. at Abstract, [0038]-[0056], claim 5.

- Furthermore, in 2008 prior to the '933 and '054 patents' priority date, the wireless communications industry already recognized the need and benefit of using Bluetooth for discovery and WiFi for transferring data, and was in the process of implementing and standardizing one such technology. For example, the Bluetooth Special Interest Group (SIG) in charge of developing the Bluetooth standards issued a press release on February 11, 2008 describing an architecture under development called "Alternate MAC/PHY," which "tak[es] classic Bluetooth connections – using Bluetooth protocols, profiles, security and other architectural elements – and allow[s] it to jump on top of the already present 802.11 radio, when necessary, to send bulky entertainment data, faster."

https://web.archive.org/web/20080214091219/http:/www.bluetooth.com/Bluetooth/Press/SIG/BLUETOOTH_TECHNOLOGY_TO_HARNESS_THE_SPEED_OF_80211.htm. Dr. Foley, the executive director of Bluetooth SIG, characterized this architecture "the wireless technology equivalent of 'low hanging fruit'." *Id.* The press release elaborated that "the SIG will make use of IEEE 802.11," recognizing it as "a technology already present in many of the devices demanding greater speeds." *Id.* A wireless and mobile analyst characterized this architectural development by Bluetooth SIG as "taking a logical step by applying Bluetooth protocols over an existing 802.11 radio to achieve efficient transfers of high data throughput applications," and noted that "[s]ince Bluetooth and 802.11 already have significant traction in mobile devices, this coupled solution could prove to be an efficient interim solution." *Id.* As another example, a February 12, 2008 Network World article noted that "Bluetooth is turning to a more ubiquitous high-speed wireless technology to help with applications where Bluetooth's own bandwidth (with a theoretical maximum of 3 megabits per second) is insufficient. . . . Alternate MAC/PHY would let a Bluetooth connection use an 802.11x network only when the additional bandwidth was needed; for tasks that can make do with standard Bluetooth speeds, the Bluetooth connection would stop using the Wi-Fi network." https://web.archive.org/web/20080315065054/https:/www.networkworld.com/news/2008/021208-mwc-bluetooth-to-work-with.html. As yet another example, in a May 13, 2008 EE Times Article by Dr. Foley, the executive

director of Bluetooth SIG, he noted that "At the heart of Bluetooth high speed technology is the concept of the Generic Alternate MAC/PHY (Generic AMP), an innovative formula for radio substitution that allows the Bluetooth stack to dynamically select the right radio for any job"; "The Generic AMP enables Bluetooth profiles and protocols to take advantage of higher data rates using one or more alternate high speed radio technologies"; "The Bluetooth stack will recognize the need for fast transfer of a large amount of data and automatically assign the 802.11 AMP to the task. When the transfer is completed and high speed is no longer required, the 802.11 radio will be shut down, and the standard Bluetooth radio will activate to maintain the Bluetooth connection"; "Already popular among younger owners of Bluetooth mobile devices who share content with their friends, this use case is currently served by the "Send via Bluetooth" function already implemented on many mobile phones, PCs and PDAs. The scenario's appeal grows with the addition of the 802.11 high speed channel reducing file transfer times by a factor of ten or more"; "the decision to pursue 802.11 as a high speed Bluetooth channel is the logical answer to a clear market need. It simply makes sense to use technology available now to deliver what the market needs now." https://www.eetimes.com/how-bluetooth-and-802-11-will-team-up-to-deliver-high-speed-wireless-connections.

- The resulting combination of Hinckley with one or more McKillop, Burns, Forutanpour, Asano, and /or Hoddie makes no hardware changes to the

Hinckley's device, only minor software changes. Hinckley already recognized that multiple wireless communication methods, such as Bluetooth and WiFi, can be implemented on a single device or system. Moreover, Hinckley would still use Bluetooth for any device-to-device interactions prior to actual transfer of content (to save power), as taught by McKillop, Burns, Forutanpour, Asano, and /or Hoddie. Thus, the combination entails making only a minor software modification to switch to Wi-Fi when transferring a file, as taught by the references.

- Cheverst, Hinckley, HP H5555, Forutanpour, Turner, and other references disclose transferring data by first exchanging a series of messages to setup the data transfer. Hinckley, for example, discloses that "a user sees a thumbnail preview of the image . . . that another user is transmitting, and can choose whether or not to accept it (Yes/No). By selecting No, the receiving user is stopping the transfer of information from the sending device." Hinckley at [0061]; *see also id.* at [0035], [0038], [0058]-[0062], FIG. 3. Cheverst Fig. 6 discloses a prompt to accept or deny incoming data transfer. Cheverst at 49. Forutanpour discloses "transmitting computing device 10 may send a file transmission query to the targeted computing device before transmitting a file. The computing device may receive an authorization response from the targeted computing device." Forutanpour at [0143]. HP H5555 also discloses a prompt to accept or deny incoming data transfer. U.S. Patent Publication No. 2005/0113079 ("Guo") discloses that the receiving device's "processor 10 causes GUI 12

to prompt the user to accept the data file 16." Guo at [0017]. U.K. Patent Publication No. GB 2,439,364 ("Turner") also discloses that such accept/deny functionality was standard in the Bluetooth protocol by at least 2005, when Turner published. Turner at 2 ("Bluetooth does provide various security mechanisms that can be used to prevent unwanted connections to a device and a subsequent infection by malware."). For example, "if a connection does result in some type of file transfer, users can be prompted as to whether they wish to accept such a transfer." *Id.* A POSITA would have recognized that a message to transfer data must be sent by the sending device in order for the receiving device to display a prompt to accept or deny the incoming data transfer based on reception of the message to transfer data. Indeed, logic requires such a message to transfer in this context, and other references discussed further below show that such message to transfer are standard features of communication protocols. Furthermore, a POSITA would have further recognized that a user input accepting the incoming transfer would cause the receiving device to transmit an acceptance message accepting the request to transfer, which would be received by the sending device and cause the sending device to start wireless transfer of the data. Again, logic requires such an acceptance message to be transmitted and received, and other references discussed further below show that such acceptance message are standard features of communication protocols.

InterDigital Exhibit 2006, p. 154
Microsoft v. InterDigital
IPR2024-00306

- Various prior art communication protocols disclose a message to transfer followed by an acceptance to transfer. For example, the Infrared Data Association® (IrDA®) Object Exchange Protocol OBEX™ ("OBEX Standard") discloses a file transfer setup procedure involving sending a "request" to transfer a named file to a target device and then sending the file only after receiving a response of "CONTINUE" from the target receiving device. OBEX Standard at 73-74. Furthermore, Bluetooth version 1.1, as specified in Bluetooth Specification Version 1.1, Vol. 2, "Profiles" ("Bluetooth Version 1.1 Vol. 2"), uses the OBEX Put operation described above to transfer a file:

BLUETOOTH SPECIFICATION Version 1.1 page 330 of 452

Generic Object Exchange Profile Bluetooth™

5.5 PUSHING DATA TO SERVER

The data object(s) is pushed to the Server using the PUT operation of the OBEX protocol. The data can be sent in one or more OBEX packets. The PUT request must include the following fields and headers:

Field/ Header	Name	Value	Status	Explanation
Field	Opcode for PUT	0x02 or 0x82	M	-
Field	Packet Length	Varies	M	-
Header	ConnectionID	Varies	C1	The header value specifies the current connection to the specific service.
Header	Name	Varies	M	The header value is the name of a single object, object store, or log information.
Header	Body/End of Body	Varies	M	End of Body identifies the last chunk of the object body.

Table 5.9: Fields and Headers in PUT Request

Bluetooth Version 1.1 Vol. 2 at 330. *See also* Bluetooth Version 2.0 Vol.

InterDigital Exhibit 2006, p. 155
Microsoft v. InterDigital
IPR2024-00306

4 at 181:

2.1 PROFILE STACK

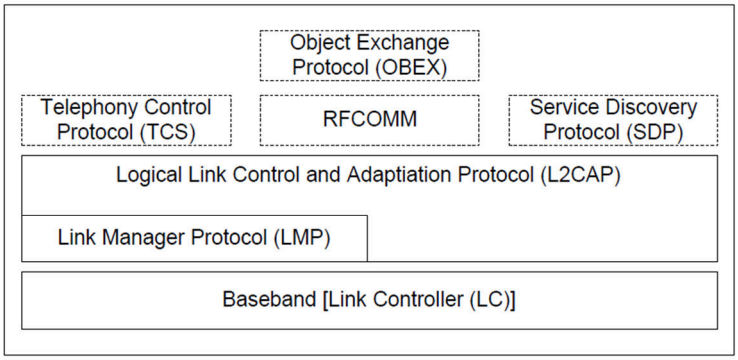

Figure 2.1: Profile stack covered by this profile.

The main purpose of this profile is to describe the use of the lower layers of the Bluetooth protocol stack (LC and LMP). To describe security related alternatives, also higher layers (L2CAP, RFCOMM and OBEX) are included.

-
- As another example, well known ad hoc (direct, peer-to-peer) Wi-Fi protocols (defined by the distributed coordination function (DCF) mode of IEEE 802.11) also used similar request and acceptance messages—a four-way handshake known as RTS-CTS—to ensure data was successfully transferred and not interrupted by other devices on the network. Frodigh et al., *Wireless ad hoc networking—The art of networking without a network*, Ericsson Review No. 4 ("Frodigh") at 261-62; *see also* Phil Karn, *MACA - A New Channel Access Method for Packet Radio*, The Proceedings of the 9th APRL Computer Networking Conference, at 134-140 (1990); Chatzimisios et al. *Optimisation of RTS/CTS handshake in IEEE 802.11 Wireless LANs for maximum performance*, IEEE Communications Society Globecom 2004 Workshops (2004) at 270. Specifically, in RTS-CTS, "[a] terminal … that wants to send data" does so by completing a "[f]our-way

handshake—the sending node sends a request-to-send (RTS) packet to the receiving terminal. If the receiver accepts the request, it replies with a clear-to-send (CTS) packet. If no collisions have occurred, the sender then begins transmitting its data." Frodigh at 262.

- Moreover, such pre-transfer request and acceptance messages were used in file transfer protocols dating back to the 1980s. The specification of the File Transfer Protocol (FTP), for example (published in 1985), specifies that the user device sends a "transfer request command" and that when the connection is established with the server device, "the server-PI sends a confirming reply to the user-PI." Postel et al., RFC 959, File Transfer Protocol ("RFC 959") at 18. Similarly, the specification for the Trivial File Transfer Protocol (TFTP) (published in 1992), specifies that "a transfer is established by sending a request … and receiving a positive reply." K. Sollins, RFC 1350, The TFTP Protocol (Revision 2) ("RFC 1350 Rev 2") at 4.
- A POSITA would have recognized that Hinckley and Cheverst, HP H5555, Forutanpour, OBEX Standard references are directed to the same field of wireless data transfer between devices. Further, a POSITA would have recognized the various advantages of sending a message to transfer and receiving an acceptance to transfer message. For example, the references recognize, as discussed above, that a user may not want to receive unwanted and/or unsolicited content, such as malware or spam, and would want to control the files the user receives. A POSITA would have recognized that

InterDigital Exhibit 2006, p. 157
Microsoft v. InterDigital
IPR2024-00306

such desirable security and control would have been provided by implementing a file transfer setup procedure in which the sending device first notifies the receiving device its intent to transfer a file, followed by the receiving device responding with a message to accept or deny the incoming transfer. Furthermore, a POSITA would have also recognized that such exchange of messages are conventional and routine aspects of various data transfer protocols. Therefore, a POSITA would have found it obvious to modify Hinckley to implement the teachings of Cheverst, HP H5555, Forutanpour, and/or OBEX Standard to achieve a practical file transfer method according to routine practices in the field, as well as enhance security and user control over wireless file transfer.

- The resulting combination requires no hardware changes to Hinckley's device, only minor software changes. Hinckley's device already include a display for displaying the accept/deny prompts. Thus, implementing the prompt functionality would have required only minor software changes to the wireless filesharing devices, including: (1) software to notify the receiving device about the transfer (i.e., by sending a message to the receiving device requesting to transfer a selected file); (2) software to, responsive to receiving such a request to transfer message, display a message prompting the user to accept or deny the transfer; (3) software to, upon receiving the user's acceptance, inform the sending device of the acceptance (i.e., by sending an acceptance message) to let it know when it is allowed to start sending selected file; and (4) software to send the

InterDigital Exhibit 2006, p. 158
Microsoft v. InterDigital
IPR2024-00306

selected file to the receiving device upon receiving the acceptance message from the receiving device.

- Implementing these messages (e.g., using Bluetooth, or Wi-Fi, or both) would have been obvious to a POSITA given that such pre-transfer messages were commonly utilized in many file transfer protocols, including Bluetooth's OBEX Put operation, FTP, TFTP, and RTS-CTS as discussed above. A POSITA would have had reasonable expectation of success in implementing this minor software modification to Hinckley's device at least because it was well within the programming skill of a POSITA.
- Aholainen, Chouraki, and Johanson each discloses allowing a user to filter which detected devices are displayed based on various criteria: Aholainen based on type / class of device (Aholainen at Abstract, 1:28-33, 2:45-54, 5:21-6:3, 7:6-23, 13:19-27, 15:20-55, 16:7-10, 17:39-41 (claim 17), FIGS 2-3A), Chouraki based on relationship with the device (friend vs. neutral vs. blacklist) (Chouraki, 38:9-15), and Johanson based on distance (Johanson, [0020], claim 3). A POSITA would have been motivated to incorporate each of these filtering functionalities because each provides a streamlined list of detected devices, allowing the user to quickly select a desired recipient without being inundated with too many options. E.g., Aholainen, 2:45-48 (filtering the list of available Bluetooth devices beneficially reduces the user being "inundate[d]" with "information about those Bluetooth devices that he/she wishes to ignore").

InterDigital Exhibit 2006, p. 159
Microsoft v. InterDigital
IPR2024-00306

- A POSITA would have been motivated to implement Aholainen's filtering functionality in the Hinckley devices to allow the user to customize which types of detected devices are displayed so that the user is not inundated with unwanted options, as taught by Aholainen. Aholainen at 2:45-48, 16:7-10. For example, someone who never uses vending machines may not want vending machines cluttering the list of available devices. Similarly, someone who primarily uses their mobile phone to share photos with friends may want to see only mobile phones. A POSITA would have been motivated to implement Chouraki's filtering functionality in the Hinckley devices to streamline the list of displayed devices, as taught by Chouraki, prioritize and more easily facilitate interactions with friends, help avoid sending personal information to mere acquaintances ("Neutral" individuals), and avoid seeing or communicating with individuals the user did not want to see or communicate with ("Blacklist[ed]" individuals). Chouraki at 27:1-10, 23:17-19. By their very nature, "friend" and "blacklist" reflect what was well-known and common-sense: users regularly share things with their friends and often wish to not engage with certain "blacklisted" users when sharing content. Reading these passages in Chouraki, a POSITA would have understood the benefits of this filtering functionality: avoiding unwanted interactions with those on a blacklist and allowing the user to prioritize and more easily facilitate interactions with friends. A POSITA would have been motivated to implement a distance-based filtering functionality in the Hinckley devices to "make[] it easy to

select a nearby wireless electronic device[] to communicate with," and mitigate the issues encountered in crowded mobile environment, as taught by Johanson. Johanson at [0002-0006], [0020]. For example, if two users next to one another in a crowded area want to share photos with each other, they would face less difficulty selecting each other's devices if the displayed devices were limited to a smaller area.

- Forutanpour in view of McKillop, Asano, Hoddie, OBEX Standard, Cheverst, Hinckley, HP H5555, Frodigh, Turner, Aholainen, Chouraki, Johanson, and/or knowledge of a POSITA. In addition to the motivations identified above, a POSITA would have had ample reason to combine Forutanpour with each of these references for a variety of reasons.
    - A POSITA would have been motivated to combine Forutanpour's wireless filesharing devices and methods with McKillop, Asano, and/or Hoddie that teaches using Bluetooth for discovering devices followed by using WiFi to transfer data, because they are all directed to the same field of wireless data transfer between devices.
    - McKillop, Asano, and Hoddie disclose wirelessly connected electronic devices that communicate with one another using wireless communication protocols, such as Bluetooth and/or Wi-Fi. Like Forutanpour, these references also disclose using Bluetooth to detect other devices. Furthermore, these references identify various advantages of combining discovery using Bluetooth with transfer using WiFi. For example, the references recognize, as discussed in the claim chart, that while Bluetooth

InterDigital Exhibit 2006, p. 161
Microsoft v. InterDigital
IPR2024-00306

is good at wirelessly detecting other target devices for file transfer, Bluetooth is relatively slow. The references further recognize that 802.11 WiFi provides superior transfer speed over Bluetooth. *See, e.g.*, McKillop at [0003]. However, the references recognize that because WiFi consumes more power compared to Bluetooth leading to short battery life, persistent use of WiFi is not necessarily desirable. *See id.* In light of these various advantages recognized by the prior art, a POSITA would have found it obvious to modify the methods and systems of Forutanpour to perform device discovery using Bluetooth (as already done by Forutanpour), then switch to WiFi for the transfer of data as taught by McKillop, Asano, and Hoddie to achieve the benefits described above, such as improved speed and power consumption without other noticeable difference in the user's filesharing experience.

- Other references also disclose combining Bluetooth discovery with WiFi transfer. For example, U.S. Patent Publication No. 2007/0011335 A1 ("Burns ") discloses using "Bluetooth to provide the network management functions such as device discovery, service discovery, security negotiation, and connection establishment" and then "establish[ing] a secondary data channel," such as 802.11 Wi-Fi, for "data communication." Burns at [0040]-[0041]. Burns recognizes that "even the fastest Bluetooth devices operate at data rates below 3 megabits per second," which is "unacceptable for applications such as high resolution image transfer or music file synchronization," and then goes on to recognize that "[o]ther networked

technologies offer significant higher data rates. WiFi for example supports data rates up to 50 megabits per second." *Id.* at [0020]. Burns then states that its technology "allows Bluetooth applications to utilize these other technologies to greatly increase the inter-device data rates. This exploitation of other network technologies doesn't require any changes in the application code of the host device or changes in the user's experience." *Id.* Furthermore, Burns notes that the disclosed switching from Bluetooth to WiFi has "no perceivable change to the user other than a higher speed data transfer." *Id.* at [0010]. In discussing specific implementation details, Burns discloses that its technology "operates as an extension to the embedded Bluetooth protocol stack," *id.* at [0023], and discusses the details of Bluetooth protocol stack, including the "Object Exchange Protocol" (OBEX). *Id.* at [0024]. As another example, U.S. Patent Publication No. 2007/013504 ("Kapur") recognizes strengths of Bluetooth include "a ubiquitous presence, [and] a sophisticated device discovery mechanism" but has a "data rate that is relatively low compared to LAN technologies, such as 802.11." Kapur at [0022]. As a solution, Kapur discloses that "[a]fter the Bluetooth® device 1002 discovers the Bluetooth® device 1004, the Bluetooth® protocol stack within the Bluetooth® device 1002 may configure the high-speed data connection 1008," which includes an 802.11 (Wi-Fi) connection. *Id.* at [0065]-[0066]; *see also id*. at [0022], [0029]. As yet another example, U.S. Patent Publication No. 2009/0034498 ("Banerjea") discloses that "a Bluetooth connection (BT connection) 110

may be established between the mobile communication devices" and then "[m]ultimedia data may be transmitted over the WiFi connection." Banerjea at [0026]-[0027]; *see also id*. at Abstract, [0008]-[0010], [0037]-[0047]. As further example, U.S. Patent Publication No. 2009/0215398 ("Adler") discloses "establishing a first connection between a first device and a second device with a first networking standard," such as Bluetooth, and then "transferring data between the first and second devices using [a] second networking standard," such as Wi-Fi. Adler at [0006]-[0008]; *see also id*. at Abstract, [0038]-[0056], claim 5.

- Furthermore, in 2008 prior to the '933 and '054 patents' priority date, the wireless communications industry already recognized the need and benefit of using Bluetooth for discovery and WiFi for transferring data, and was in the process of implementing and standardizing one such technology. For example, the Bluetooth Special Interest Group (SIG) in charge of developing the Bluetooth standards issued a press release on February 11, 2008 describing an architecture under development called "Alternate MAC/PHY," which "tak[es] classic Bluetooth connections – using Bluetooth protocols, profiles, security and other architectural elements – and allow[s] it to jump on top of the already present 802.11 radio, when necessary, to send bulky entertainment data, faster." https://web.archive.org/web/20080214091219/http:/www.bluetooth.com/Bluetooth/Press/SIG/BLUETOOTH_TECHNOLOGY_TO_HARNESS_THE_SPEED_OF_80211.htm. Dr. Foley, the executive director of Bluetooth

SIG, characterized this architecture "the wireless technology equivalent of 'low hanging fruit'." *Id.* The press release elaborated that "the SIG will make use of IEEE 802.11," recognizing it as "a technology already present in many of the devices demanding greater speeds." *Id.* A wireless and mobile analyst characterized this architectural development by Bluetooth SIG as "taking a logical step by applying Bluetooth protocols over an existing 802.11 radio to achieve efficient transfers of high data throughput applications," and noted that "[s]ince Bluetooth and 802.11 already have significant traction in mobile devices, this coupled solution could prove to be an efficient interim solution." *Id.* As another example, a February 12, 2008 Network World article noted that "Bluetooth is turning to a more ubiquitous high-speed wireless technology to help with applications where Bluetooth's own bandwidth (with a theoretical maximum of 3 megabits per second) is insufficient. . . . Alternate MAC/PHY would let a Bluetooth connection use an 802.11x network only when the additional bandwidth was needed; for tasks that can make do with standard Bluetooth speeds, the Bluetooth connection would stop using the Wi-Fi network." https://web.archive.org/web/20080315065054/https:/www.networkworld.com/news/2008/021208-mwc-bluetooth-to-work-with.html. As yet another example, in a May 13, 2008 EE Times Article by Dr. Foley, the executive director of Bluetooth SIG, he noted that "At the heart of Bluetooth high speed technology is the concept of the Generic Alternate MAC/PHY (Generic AMP), an innovative formula for radio substitution that allows the

Bluetooth stack to dynamically select the right radio for any job"; "The Generic AMP enables Bluetooth profiles and protocols to take advantage of higher data rates using one or more alternate high speed radio technologies"; "The Bluetooth stack will recognize the need for fast transfer of a large amount of data and automatically assign the 802.11 AMP to the task. When the transfer is completed and high speed is no longer required, the 802.11 radio will be shut down, and the standard Bluetooth radio will activate to maintain the Bluetooth connection"; "Already popular among younger owners of Bluetooth mobile devices who share content with their friends, this use case is currently served by the "Send via Bluetooth" function already implemented on many mobile phones, PCs and PDAs. The scenario's appeal grows with the addition of the 802.11 high speed channel reducing file transfer times by a factor of ten or more"; "the decision to pursue 802.11 as a high speed Bluetooth channel is the logical answer to a clear market need. It simply makes sense to use technology available now to deliver what the market needs now." https://www.eetimes.com/how-bluetooth-and-802-11-will-team-up-to-deliver-high-speed-wireless-connections.

- The resulting combination of Forutanpour with one or more McKillop, Asano, and/or Hoddie makes no hardware changes to the Forutanpour's device, only minor software changes. Forutanpour already recognized that multiple wireless communication methods, such as Bluetooth and WiFi, can be implemented on a single device or system. Moreover, Forutanpour

InterDigital Exhibit 2006, p. 166
Microsoft v. InterDigital
IPR2024-00306

would still use Bluetooth for any device-to-device interactions prior to actual transfer of content (to save power), as taught by McKillop, Asano, and/or Hoddie. Thus, the combination entails making only a minor software modification to switch to Wi-Fi when transferring a file, as taught by the references.

- Cheverst, Hinckley, HP H5555, Turner, and other references disclose transferring data by first exchanging a series of messages to setup the data transfer. Hinckley, for example, discloses that "a user sees a thumbnail preview of the image . . . that another user is transmitting, and can choose whether or not to accept it (Yes/No). By selecting No, the receiving user is stopping the transfer of information from the sending device." Hinckley at [0061]; *see also id.* at [0035], [0038], [0058]-[0062], FIG. 3. Cheverst Fig. 6 discloses a prompt to accept or deny incoming data transfer. Cheverst at 49. HP H5555 also discloses a prompt to accept or deny incoming data transfer. U.S. Patent Publication No. 2005/0113079 ("Guo") discloses that the receiving device's "processor 10 causes GUI 12 to prompt the user to accept the data file 16." Guo at [0017]. U.K. Patent Publication No. GB 2,439,364 ("Turner") also discloses that such accept/deny functionality was standard in the Bluetooth protocol by at least 2005, when Turner published. Turner at 2 ("Bluetooth does provide various security mechanisms that can be used to prevent unwanted connections to a device and a subsequent infection by malware."). For example, "if a connection does result in some type of file transfer, users

can be prompted as to whether they wish to accept such a transfer." *Id.* A POSITA would have recognized that a message to transfer data must be sent by the sending device in order for the receiving device to display a prompt to accept or deny the incoming data transfer based on reception of the message to transfer data. Indeed, logic requires such a message to transfer in this context, and other references discussed further below show that such message to transfer are standard features of communication protocols. Furthermore, a POSITA would have further recognized that a user input accepting the incoming transfer would cause the receiving device to transmit an acceptance message accepting the request to transfer, which would be received by the sending device and cause the sending device to start wireless transfer of the data. Again, logic requires such an acceptance message to be transmitted and received, and other references discussed further below show that such acceptance message are standard features of communication protocols.

- Various prior art communication protocols disclose a message to transfer followed by an acceptance to transfer. For example, the Infrared Data Association® (IrDA®) Object Exchange Protocol OBEX™ ("OBEX Standard") discloses a file transfer setup procedure involving sending a "request" to transfer a named file to a target device and then sending the file only after receiving a response of "CONTINUE" from the target receiving device. OBEX Standard at 73-74. Furthermore, Bluetooth version 1.1, as specified in Bluetooth Specification Version 1.1, Vol. 2,

"Profiles" ("Bluetooth Version 1.1 Vol. 2"), uses the OBEX Put operation described above to transfer a file:

5.5 PUSHING DATA TO SERVER

The data object(s) is pushed to the Server using the PUT operation of the OBEX protocol. The data can be sent in one or more OBEX packets. The PUT request must include the following fields and headers:

Field/ Header	Name	Value	Status	Explanation
Field	Opcode for PUT	0x02 or 0x82	M	-
Field	Packet Length	Varies	M	-
Header	ConnectionID	Varies	C1	The header value specifies the current connection to the specific service.
Header	Name	Varies	M	The header value is the name of a single object, object store, or log information.
Header	Body/End of Body	Varies	M	End of Body identifies the last chunk of the object body.

Table 5.9: Fields and Headers in PUT Request

Bluetooth Version 1.1 Vol. 2 at 330. *See also* Bluetooth Version 2.0 Vol. 4 at 181:

2.1 PROFILE STACK

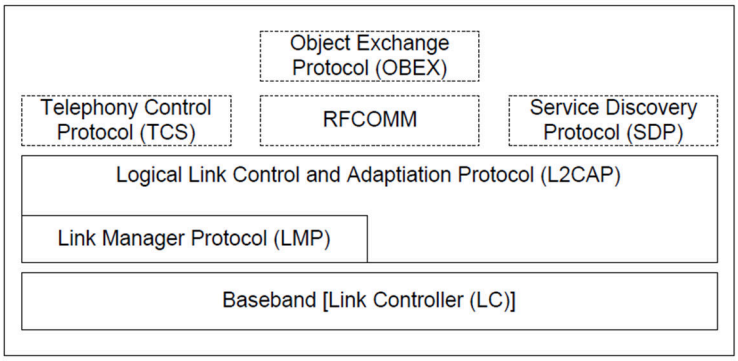

Figure 2.1: Profile stack covered by this profile.

The main purpose of this profile is to describe the use of the lower layers of the Bluetooth protocol stack (LC and LMP). To describe security related alternatives, also higher layers (L2CAP, RFCOMM and OBEX) are included.

- As another example, well known ad hoc (direct, peer-to-peer) Wi-Fi protocols (defined by the distributed coordination function (DCF) mode of IEEE 802.11) also used similar request and acceptance messages—a four-way handshake known as RTS-CTS—to ensure data was successfully transferred and not interrupted by other devices on the network. Frodigh et al., *Wireless ad hoc networking—The art of networking without a network*, Ericsson Review No. 4 ("Frodigh") at 261-62; *see also* Phil Karn, *MACA - A New Channel Access Method for Packet Radio*, The Proceedings of the 9th APRL Computer Networking Conference, at 134-140 (1990); Chatzimisios et al. *Optimisation of RTS/CTS handshake in IEEE 802.11 Wireless LANs for maximum performance*, IEEE Communications Society Globecom 2004 Workshops (2004) at 270. Specifically, in RTS-CTS, "[a] terminal … that wants to send data" does so by completing a "[f]our-way handshake—the sending node sends a request-to-send (RTS) packet to the receiving terminal. If the receiver accepts the request, it replies with a clear-to-send (CTS) packet. If no collisions have occurred, the sender then begins transmitting its data." Frodigh at 262.
- Moreover, such pre-transfer request and acceptance messages were used in file transfer protocols dating back to the 1980s. The specification of the File Transfer Protocol (FTP), for example (published in 1985), specifies that the user device sends a "transfer request command" and that when the connection is established with the server device, "the server-PI sends a confirming reply to the user-PI." Postel et al., RFC 959, File Transfer

Protocol ("RFC 959") at 18. Similarly, the specification for the Trivial File Transfer Protocol (TFTP) (published in 1992), specifies that "a transfer is established by sending a request … and receiving a positive reply." K. Sollins, RFC 1350, The TFTP Protocol (Revision 2) ("RFC 1350 Rev 2") at 4.

- A POSITA would have recognized that Forutanpour and Cheverst, Hinckley, HP H5555, OBEX Standard references are directed to the same field of wireless data transfer between devices. Further, a POSITA would have recognized the various advantages of sending a message to transfer and receiving an acceptance to transfer message. For example, the references recognize, as discussed above, that a user may not want to receive unwanted and/or unsolicited content, such as malware or spam, and would want to control the files the user receives. A POSITA would have recognized that such desirable security and control would have been provided by implementing a file transfer setup procedure in which the sending device first notifies the receiving device its intent to transfer a file, followed by the receiving device responding with a message to accept or deny the incoming transfer. Furthermore, a POSITA would have also recognized that such exchange of messages are conventional and routine aspects of various data transfer protocols. Therefore, a POSITA would have found it obvious to modify Forutanpour to implement the teachings of Cheverst, Hinckley, HP H5555, and/or OBEX Standard to achieve a

practical file transfer method according to routine practices in the field, as well as enhance security and user control over wireless file transfer.

- The resulting combination requires no hardware changes to Forutanpour's device, only minor software changes. Forutanpour's device already include a display for displaying the accept/deny prompts. Thus, implementing the prompt functionality would have required only minor software changes to the wireless filesharing devices, including: (1) software to notify the receiving device about the transfer (i.e., by sending a message to the receiving device requesting to transfer a selected file); (2) software to, responsive to receiving such a request to transfer message, display a message prompting the user to accept or deny the transfer; (3) software to, upon receiving the user's acceptance, inform the sending device of the acceptance (i.e., by sending an acceptance message) to let it know when it is allowed to start sending selected file; and (4) software to send the selected file to the receiving device upon receiving the acceptance message from the receiving device.
- Implementing these messages (e.g., using Bluetooth, or Wi-Fi, or both) would have been obvious to a POSITA given that such pre-transfer messages were commonly utilized in many file transfer protocols, including Bluetooth's OBEX Put operation, FTP, TFTP, and RTS-CTS as discussed above. A POSITA would have had reasonable expectation of success in implementing this minor software modification to Forutanpour's device at least because it was well within the programming skill of a POSITA.

InterDigital Exhibit 2006, p. 172
Microsoft v. InterDigital
IPR2024-00306

- Aholainen, Chouraki, and Johanson each discloses allowing a user to filter which detected devices are displayed based on various criteria: Aholainen based on type / class of device (Aholainen at Abstract, 1:28-33, 2:45-54, 5:21-6:3, 7:6-23, 13:19-27, 15:20-55, 16:7-10, 17:39-41 (claim 17), FIGS 2-3A), Chouraki based on relationship with the device (friend vs. neutral vs. blacklist) (Chouraki, 38:9-15), and Johanson based on distance (Johanson, [0020], claim 3). A POSITA would have been motivated to incorporate each of these filtering functionalities because each provides a streamlined list of detected devices, allowing the user to quickly select a desired recipient without being inundated with too many options. E.g., Aholainen, 2:45-48 (filtering the list of available Bluetooth devices beneficially reduces the user being "inundate[d]" with "information about those Bluetooth devices that he/she wishes to ignore").
- A POSITA would have been motivated to implement Aholainen's filtering functionality in the Forutanpour devices to allow the user to customize which types of detected devices are displayed so that the user is not inundated with unwanted options, as taught by Aholainen. Aholainen at 2:45-48, 16:7-10. For example, someone who never uses vending machines may not want vending machines cluttering the list of available devices. Similarly, someone who primarily uses their mobile phone to share photos with friends may want to see only mobile phones. A POSITA would have been motivated to implement Chouraki's filtering functionality in the Forutanpour devices to streamline the list of displayed devices, as taught by

Chouraki, prioritize and more easily facilitate interactions with friends, help avoid sending personal information to mere acquaintances ("Neutral" individuals), and avoid seeing or communicating with individuals the user did not want to see or communicate with ("Blacklist[ed]" individuals). Chouraki at 27:1-10, 23:17-19. By their very nature, "friend" and "blacklist" reflect what was well-known and common-sense: users regularly share things with their friends and often wish to not engage with certain "blacklisted" users when sharing content. Reading these passages in Chouraki, a POSITA would have understood the benefits of this filtering functionality: avoiding unwanted interactions with those on a blacklist and allowing the user to prioritize and more easily facilitate interactions with friends. A POSITA would have been motivated to implement a distance-based filtering functionality in the Forutanpour devices to "make[] it easy to select a nearby wireless electronic device[] to communicate with," and mitigate the issues encountered in crowded mobile environment, as taught by Johanson. Johanson at [0002-0006], [0020]. For example, if two users next to one another in a crowded area want to share photos with each other, they would face less difficulty selecting each other's devices if the displayed devices were limited to a smaller area.

InterDigital Exhibit 2006, p. 174
Microsoft v. InterDigital
IPR2024-00306

Lenovo further incorporates by reference petitions for *inter partes* review IPR2024-00305 and IPR2024-00306, including the background, state of the art, and motivations to combine disclosed therein.

12. Secondary Considerations

InterDigital bears the burden of establishing the existence of secondary considerations and the requisite nexus to the claimed inventions. To date, InterDigital has not contended that any secondary considerations support any alleged non-obviousness of the Asserted Claims. To the extent that InterDigital subsequently contends that any secondary considerations support a conclusion that any of the Asserted Claims are not obvious in response to this interrogatory or otherwise, Lenovo reserves the right to respond, including to amend and/or supplement these Invalidity Contentions. Moreover, as these Invalidity Contentions demonstrate, none of the Asserted Claims address any need that was either long felt or unmet, nor were their results unexpected. To the contrary, the extensive invalidating prior art detailed above and in Lenovo's charts show that before the Asserted Patents, the prior art techniques, designs, and systems were widely accepted, understood, and available. Finally, although secondary considerations may be relevant to the obviousness analysis, secondary considerations of non-obviousness cannot overcome the strong prima facie case of obviousness set forth in these Invalidity Contentions.

V. INVALIDITY UNDER 35 U.S.C. § 112

Lenovo identifies the following terms in the Asserted Claims that Lenovo contends are invalid as not being in compliance with the requirements of 35 U.S.C. § 112. The Asserted Claims

are invalid for indefiniteness, lack of enablement, and/or lack of written description, for at least the reasons below.

A. *'859 Patent*

Claims 10 and 15 of the '859 patent, reproduced below for reference are invalid under 35 U.S.C. § 112:

Claim 10 of the '859 patent:

10. Arithmetic decoding method for symbols coded in the form of a stream, comprising the following steps applied at switching points distributed in said stream to decode a current symbol:

decoding from the stream, for said current symbol, a probability model identifier,

selecting using said probability model identifier a probability model in a set comprising a current probability model defined from symbols coded previous to the current symbol and a subset of probability models wherein subset comprises at least one probability model defined by default,

adding in said subset said current probability model, the selected probability model becoming the current probability model,

decoding said current symbol with said current probability model, and

updating said current probability model according to the decoding of said current symbol.

Claim 15 of the '859 patent:

15. Arithmetic decoder for decoding symbols coded in the form of a stream, comprising:

means for decoding from the stream, at switching points distributed in said stream to decode a current symbol, for said current symbol, a probability model identifier,

means for selecting using said probability model identifier a probability model in a set comprising a current probability model defined from symbols coded previous to the current symbol and a subset of probability models wherein subset comprises at least one probability model defined by default,

means for adding in said subset said current probability model, the selected probability model becoming the current probability model,

means for decoding said current symbol with said current probability model, and

InterDigital Exhibit 2006, p. 176
Microsoft v. InterDigital
IPR2024-00306

means for updating said current probability model according to the decoding of said current symbol.

These contentions are necessarily preliminary and the claims have yet to be construed. Discovery is ongoing and the Lenovo reserves the right to supplement these contentions during both fact and expert discovery.

1. Lack of Written Description

Under 35 U.S.C. § 112, ¶1, "[t]he specification shall contain a written description of the invention, and of the manner and process of making and using it, in such full, clear, concise, and exact terms as to enable any person skilled in the art to which it pertains, or with which it is most nearly connected, to make and use the same, and shall set forth the best mode contemplated by the inventor or joint inventor of carrying out the invention." To satisfy the written description requirement, the specification must describe the claimed invention in sufficient detail that one skilled in the art can reasonably conclude that the inventor had possession of the claimed invention at the time of filing. *Reiffin v. Microsoft Corp.*, 214 F.3d 1342, 1345 (Fed. Cir. 2000) ("The purpose of [the written description requirement] is to ensure that the scope of the right to exclude, as set forth in the claims, does not overreach the scope of the inventor's contribution to the field of art as described in the patent specification".)

a. "switching points distributed in said stream"

The specification of the '859 patent lacks written description support for the claimed "switching points distributed in said stream" because there is no description of where or how the switching points are to be distributed in the bitstream. While the '859 patent describes steps to be performed at switching points, neither the figures nor the written text of the '859 patent describe

InterDigital Exhibit 2006, p. 177
Microsoft v. InterDigital
IPR2024-00306

or support a disclosure of "switching points distributed in said stream." *See e.g.*, '859 Patent at Figs. 3, 4, 6, 7, 9, 11.

2. Lack of Enablement

A claim is invalid for lack of enablement if a POSITA would not be able to read the specification and practice the claimed invention without undue experimentation. *Amgen Inc. v. Sanofi, Aventisub LLC*, 987 F.3d 1080, 1084 (Fed. Cir. 2021). "Whether undue experimentation is needed is not a single, simple factual determination, but rather is a conclusion reached by weighing many factual considerations." *Amgen Inc.*, 987 F.3d at 1084 (internal citation, quotation marks omitted). The factual considerations, which are known as "*Wands* factors," are "(1) the quantity of experimentation necessary, (2) the amount of direction or guidance presented, (3) the presence or absence of working examples, (4) the nature of the invention, (5) the state of the prior art, (6) the relative skill of those in the art, (7) the predictability or unpredictability of the art, and (8) the breadth of the claims." *Id*. (quoting *In re Wands*, 858 F.2d 731, 736–37 (Fed. Cir. 1988)).

For at least the same reasons set forth above with respect to written description, the following claim elements lack enablement and therefore are invalid under 35 U.S.C. § 112, 1¶:

- switching points distributed in said stream (claims 10 and 15 of the '859 patent)

A POSITA, having read the specification at the time of invention, would have not been able to make and use the claim elements set forth above without undue experimentation. With respect to the *Wands* factors, fact and expert discovery is expected to demonstrate at least that the quantity of experimentation to make and use the claimed invention was high, there were no working examples developed by the Applicants at the time of invention, and there is no disclosure of these elements.

3. Indefiniteness

35 U.S.C. § 112, ¶ 6 limits "functional claiming," which is the practice of claiming a result without disclosing how to accomplish it. *See Williamson v. Citrix Online, LLC*, 792 F.3d 1339, 1349–51 (Fed. Cir. 2015) (en banc) (imposing new standard of indefiniteness to address "proliferation of functional claiming untethered to § 112, I 6 and free of the strictures set forth in the statute."). Under the statute, a patentee can claim an invention by reciting the function it performs, but the scope of the patentee's right of exclusion is expressly limited to the specific solutions disclosed in the specification. This reflects a straightforward application of the fundamental principle that a patentee cannot claim more than what he or she invented. In *Williamson*, the Federal Circuit reinforced and strengthened the longstanding prohibition against functional claiming: if the claim does not identify the specific structure sufficient to achieve a claimed result, then the specification must expressly disclose the specific structure(s) that perform the claimed function. *Williamson*, 792 F.3d at 1350.

The use of "means" followed by functional language creates the rebuttable presumption that § 112, ¶ 6 applies. Yet, regardless of whether the word "means" is recited, § 112, ¶ 6 applies if a skilled artisan would not have understood the words of the claim "to have a sufficiently definite meaning as the name for structure." *Id*. at 1349; *Digit. Retail Apps, Inc. v. H-E-B*, No. 6-19-cv-00167-ADA, 2020 WL 376664, at *2 (W.D. Tex. Jan. 23, 2020) (the standard is "whether one of ordinary skill in the art would understand the claim with the functional language, in the context of the entire specification, to denote sufficiently definite structure or acts for performing the function"). If the claim merely recites functions performed by unspecified black boxes, the claim is subject to the requirements of § 112, ¶ 6. *Williamson*, 792 F.3d at 1350–51.

InterDigital Exhibit 2006, p. 179
Microsoft v. InterDigital
IPR2024-00306

Courts have held that terms like "unit" and "device" are nonce words, devoid of any structure. (*Id*. at 1350 ("Generic terms such as 'mechanism,' 'element,' 'device,' and other nonce words that reflect nothing more than verbal constructs" may invoke § 112, ¶ 6 because they "typically do not connote sufficiently definite structure").) Indeed, the Patent Office identifies "unit" and "device" as "non-structural generic placeholders" that typically invoke § 112, ¶ 6. Manual of Pat. Exam. Proc. § 2181 at ¶ I.A. And "[t]he Federal Circuit has rejected the argument that replacing the word 'means' with 'unit' or 'device' takes the limitations outside of the bounds of Section 112(f)." *Via Vadis, LLC v. Buffalo Ams., Inc.*, No. A-14-CV-808-LY, 2016 WL 5239626, at *5 (W.D. Tex. Sept. 20, 2016) (affirmed in part, reversed in part on other grounds, 815 F. App'x 539 (2020)); *see also Diebold Nixdorf, Inc. v. Int'l Trade Comm'n*, 899 F.3d 1291, 1296–98 (Fed. Cir. 2018) (construing functional black box term "cheque standby unit" under § 112, ¶ 6).

Once a term is determined to fall within § 112, ¶ 6, that claim is indefinite unless the specification "clearly links or associates" a particular structure with the function recited in the claims. *Williamson*, 792 F.3d. at 1352. That structure must be "adequate" to achieve the claimed function. *Id.* "[I]f a person of ordinary skill in the art would be unable to recognize the structure in the specification and associate with the corresponding function in the claim, a means-plus-function clause is indefinite." *Id.* However, the "testimony of one of ordinary skill in the art cannot supplant the total absence of structure from the specification." *Id.* at 1354 (internal citation omitted).

For claims directed towards computer-implemented inventions, the structure disclosed in the specification must be more than a general-purpose computer or microprocessor. *Aristocrat Techs. Australia PTY Ltd. v. Int'l Game Tech.,* 521 F.3d 1328, 1333 (Fed. Cir. 2008) (holding

that where a means-plus-function limitation is implemented using general-purpose computer, the specification must disclose the algorithm to achieve the claimed function). This is because general purpose computers can be programmed to perform different tasks in different ways and such a disclosure would effectively provide no limit on the scope of the claims. Thus, the corresponding structure for a computer-implemented function is not a computer; it is a specific algorithm that allows a general-purpose computer or microprocessor to perform the claimed function. *Id.* An algorithm is a fixed step-by-step procedure for accomplishing a given result. A specification that fails to express the procedural algorithm as a mathematical formula, in prose, or as a flow chart will lack the requisite corresponding structure required by § 112, ¶ 6 and is therefore be invalid. *Arendi S.A.R.L. v. LG Electronics, Inc.*, 2019 WL 3891150 at *10 (D. Del. 2019) (finding a claim invalid, noting in the § 112, ¶ 6 context that "the specification fails to disclose any actual ***algorithm*** – whether in prose, as a mathematical formula, as a flow chart, or in any other suitable format – that could be followed to determine ***which text***, of all of the text in the document, is a name or address") (emphasis in original).

The following limitations recited in the '859 patent Asserted Claims are indefinite in whole, in part or in combination.

- "means for decoding from the stream, at switching points distributed in said stream to decode a current symbol, for said current symbol, a probability model identifier" (claim 15)
- "means for selecting using said probability model identifier a probability model in a set comprising a current probability model defined from symbols coded previous to the current symbol and a subset of probability models wherein subset comprises at least one probability model defined by default" (claim 15)

- "means for adding in said subset said current probability model, the selected probability model becoming the current probability model" (claim 15)
- "means for decoding said current symbol with said current probability model" (claim 15)
- "means for updating said current probability model according to the decoding of said current symbol" (claim 15)

B. *'556 Patent*

Claims 1-8 of the '556 patent, reproduced below for reference, are invalid under 35 U.S.C. § 112:

> **1. A method comprising:**
> **decoding an image region,**
> **wherein the decoding includes performing in-loop filtering to reduce at least a first and a second type of coding artifact using at least two filters in succession,**
> **the at least two filters including a deblocking filter for performing a first pass to reduce blocking artifacts**
> **and an adaptive sparse de-noising filter for performing a second pass to reduce noise,**
> **wherein the adaptive sparse de-noising filter is selectively enabled or disabled at a given level, the given level being at least a macroblock level, a slice level, a picture level or a sequence level.**
>
> **2. The method of claim 1, wherein at least one of the at least two filters is used to enforce at least one compression constraint.**
>
> **3. The method of claim 1, wherein at least one of the at least two filters is adaptively enabled or disabled depending upon at least data characteristics corresponding to the image region or data statistics corresponding to the image region.**
>
> **4. The method of claim 1, wherein a version of the image region that is displayed is different from at least one of an output signal corresponding to the image region after the at least two in-loop filters and an initial input signal corresponding to the image region before the at least two in-loop filters.**

InterDigital Exhibit 2006, p. 182
Microsoft v. InterDigital
IPR2024-00306

5. An apparatus comprising at least a memory and one or more processors, the one or more processors being configured to:
decode an image region,
the one or more processors including at least two filters for successively performing in-loop filtering to reduce at least a first and a second type of coding artifact,
the at least two filters including a deblocking filter for performing a first pass to reduce blocking artifacts
and an adaptive sparse de-noising filter for performing a second pass to reduce noise,
herein the adaptive sparse de-noising filter is selectively enabled or disabled at a given level, the given level being at least a macroblock level, a slice level, a picture level or a sequence level.

6. The apparatus of claim 5, wherein at least one of the at least two filters is used to enforce at least one compression constraint.

7. The apparatus of claim 5, whereinat least one of the at least two filters is adaptively enabled or disabled depending upon at least data characteristics corresponding to the image region or data statistics corresponding to the image region.

8. The apparatus of claim 5, wherein a version of the image region that is displayed is different from at least one of an output signal corresponding to the image region after the at least two in-loop filters and an initial input signal corresponding to the image region before the at least two in-loop filters.

These contentions are necessarily preliminary and the claims have yet to be construed. Discovery is ongoing and the Lenovo reserves the right to supplement these contentions during both fact and expert discovery.

1. Lack of Written Description

Under 35 U.S.C. § 112, ¶1, "[t]he specification shall contain a written description of the invention, and of the manner and process of making and using it, in such full, clear, concise, and exact terms as to enable any person skilled in the art to which it pertains, or with which it is most

InterDigital Exhibit 2006, p. 183
Microsoft v. InterDigital
IPR2024-00306

nearly connected, to make and use the same, and shall set forth the best mode contemplated by the inventor or joint inventor of carrying out the invention." To satisfy the written description requirement, the specification must describe the claimed invention in sufficient detail that one skilled in the art can reasonably conclude that the inventor had possession of the claimed invention at the time of filing. *Reiffin v. Microsoft Corp.*, 214 F.3d 1342, 1345 (Fed. Cir. 2000) ("The purpose of [the written description requirement] is to ensure that the scope of the right to exclude, as set forth in the claims, does not overreach the scope of the inventor's contribution to the field of art as described in the patent specification".)

a. "a version of the image region that is displayed is different from at least one of an output signal corresponding to the image region after the at least two in-loop filters and an initial input signal corresponding to the image region before the at least two in-loop filters."

The specification of the '556 patent lacks written description support for the claimed "wherein a version of the image region that is displayed is different from at least one of an output signal corresponding to the image region after the at least two in-loop filters and an initial input signal corresponding to the image region before the at least two in-loop filters" because there is no description of any modifications made to the output image after the in-loop filters, or any kind of equivalent. Neither the figures nor the written text of the patents describe or support a disclosure of "a version of the image region that is displayed is different from at least one of an output signal corresponding to the image region after the at least two in-loop filters and an initial input signal corresponding to the image region before the at least two in-loop filters." *See e.g.*, '556 Patent at Figs. 3 and 4.

2. Indefiniteness

Under § 112, ¶ 2, "a patent is invalid for indefiniteness if its claims, read in light of the specification delineating the patent, and the prosecution history, fail to inform, with reasonable certainty, those skilled in the art about the scope of the invention." *Nautilus, Inc. v. Biosig Instruments, Inc.*, 572 U.S. 898, 901 (2014). Several of the '556 Patent Asserted Claims are invalid because they fail to inform those skilled in the art about the scope of the invention with reasonable certainty and are indefinite under § 112, ¶ 2, for failing to particularly point out and distinctly claim the subject matter the applicants regard as their invention.

The following limitations recited in the '556 patent Asserted Claims are indefinite in whole, in part or in combination.

Term	Relevant Claim(s)
"sparse de-noising filter"	1, 5

C. *'933 and '054 Patents*

Independent claims 1 and 23 of the '933 and '054 patents, as well as dependent claims 5, 6, 11, 20, 21, 22, 27, 28, 33, 42-44 of the '933 patent and 6, 7, 12, 21, 28, 29, 34, and 43 of the '054 patent, are invalid under 35 U.S.C. § 112. Claims 1 and 23 of the '933 and '054 patents are reproduced below for reference:

Claim 1 of the '933 patent:

> **1. A method performed by a wireless transmit/receive unit (WTRU), the method comprising:**
> **processing, by the WTRU, a touchscreen input to select a media element;**
> **detecting, by the WTRU using Bluetooth, a plurality of WTRUs in proximity to the WTRU;**
> **processing, by the WTRU, another touchscreen input to select a WTRU of the plurality of WTRUs;**

InterDigital Exhibit 2006, p. 185
Microsoft v. InterDigital
IPR2024-00306

sending, by the WTRU, a message to transfer the selected media element to the selected WTRU;
receiving, by the WTRU, an acceptance to transfer the selected media element to the selected WTRU; and
transferring, by the WTRU using a WiFi communication, the selected media element to the selected WTRU.

Claim 1 of the ’054 patent:

1. A method performed by a wireless transmit/receive unit (WTRU), the method comprising:
processing, by the WTRU from a touch display, an input to select media in an application;
detecting, by the WTRU over bluetooth, another WTRU;
processing, by the WTRU, another input from the touch display to select the another WTRU;
sending, by the WTRU to the selected another WTRU, a message to transfer the selected media;
receiving, by the WTRU, an acceptance to transfer the selected media; and
transferring, by the WTRU to the selected another WTRU over WiFi, the selected media.

Claim 23 of the ’933 patent:

23. A wireless transmit/receive unit (WTRU) comprising:
a processor configured to process a touchscreen input to select a media element;
circuitry configured to detect, using Bluetooth, a plurality of WTRUs in proximity to the WTRU;
the processor is further configured to process another touchscreen input to select a WTRU of the plurality of WTRUs;
circuitry configured to send a message to transfer the selected media element to the selected WTRU;
circuitry configured to receive an acceptance to transfer the selected media element to the selected WTRU; and
circuitry configured to transfer, using a WiFi communication, the selected media element to the selected WTRU.

Claim 23 of the ’054 patent:

23. A wireless transmit/receive unit (WTRU) comprising:
circuitry configured to process, from a touch display, an input to select media in an application;

InterDigital Exhibit 2006, p. 186
Microsoft v. InterDigital
IPR2024-00306

circuitry configured to detect, by the WTRU over bluetooth, another WTRU;
the circuitry further configured to process another input from the touch display to select the another WTRU;
circuitry configured to send, by the WTRU to the selected another WTRU, a message to transfer the selected media;
circuitry configured to receive, by the WTRU, an acceptance to transfer the selected media; and
circuitry configured to transfer, by the WTRU to the selected another WTRU over WiFi, the selected media.

These contentions are necessarily preliminary and the claims have yet to be construed. Discovery is ongoing and the Lenovo reserve the right to supplement these contentions during both fact and expert discovery.

1. Lack of Written Description

Under 35 U.S.C. § 112, ¶1, "[t]he specification shall contain a written description of the invention, and of the manner and process of making and using it, in such full, clear, concise, and exact terms as to enable any person skilled in the art to which it pertains, or with which it is most nearly connected, to make and use the same, and shall set forth the best mode contemplated by the inventor or joint inventor of carrying out the invention." To satisfy the written description requirement, the specification must describe the claimed invention in sufficient detail that one skilled in the art can reasonably conclude that the inventor had possession of the claimed invention at the time of filing. *Reiffin v. Microsoft Corp.*, 214 F.3d 1342, 1345 (Fed. Cir. 2000) ("The purpose of [the written description requirement] is to ensure that the scope of the right to exclude, as set forth in the claims, does not overreach the scope of the inventor's contribution to the field of art as described in the patent specification".).

InterDigital Exhibit 2006, p. 187
Microsoft v. InterDigital
IPR2024-00306

a. "detecting, by the WTRU using Bluetooth, a plurality of WTRUs in proximity to the WTRU" and "transferring, by the WTRU using a WiFi communication, the selected media element to the selected WTRU"

The specification of the '933 and '054 patents lacks written description support for the claimed "detecting, by the WTRU using Bluetooth, a plurality of WTRUs in proximity to the WTRU" and "transferring, by the WTRU using a WiFi communication, the selected media element to the selected WTRU" ('933 patent claim 1) / "detecting, by the WTRU over bluetooth, another WTRU" and "transferring, by the WTRU to the selected another WTRU over WiFi, the selected media" ('054 patent claim 1)[8] because there is no description of "detecting" a plurality of WTRU using "Bluetooth" and "transferring" a selected media using "WiFi Communication" as claimed, or any kind of equivalent. Neither the figures nor the written text of the patents describe or support a disclosure of using Bluetooth for detection and switching to WiFi Communication for transferring a media. The shared specification of the '933 and '054 patents discloses a "communication peripheral 107 [that] may be implemented as a wireless personal area network (WPAN) device, for example Bluetooth®, Wireless Universal Serial Bus (W-USB) or WiFi® in ad-hoc mode." *See e.g.*, '054 patent at 2:36-49. It further discloses that "[t]he communication peripherals 107 may include technologies such as a third generation partnership (3GPP) second or third generation standards (2G/3G) modem, Bluetooth® or WiFi®. Any combination or all of these communication technologies may be implemented in a single component design." *See e.g.*, '054 patent at 2:60-66. While the shared specification of the '933 patent and '054 patent discloses that a combination of communication technologies may be implemented in a single component design, such disclosure is insufficient to satisfy the written

[8] The language of '933 patent claim is quoted in this section as representative of the lack of written description across all asserted claims of the '933 and '054 patents. The theory described herein applies in equal force to all asserted claims of the '933 and '054 patents.

description requirement. *Lockwood v. Am. Airlines, Inc.*, 107 F.3d 1565, 1572 (Fed. Cir. 1997) ("[A]ll limitations must appear in the specification."); *see also Ariad*, 598 F.3d at 1351-52 ("[T]he test requires an objective inquiry into the *four corners of the specification*" as "*it is the specification itself that must demonstrate possession*."); *PowerOasis, Inc. v. T-Mobile USA, Inc.*, 522 F.3d 1299, 1306-07 (Fed. Cir. 2008) ("[T]o satisfy the written description requirement, 'the missing descriptive matter *must necessarily be present in the . . . specification*[.]'"), 1310 ("Obviousness simply is not enough; subject matter must be disclosed to establish possession."); *Carnegie Mellon Univ. v. Hoffmann–La Roche Inc.*, 541 F.3d 1115, 1122 (Fed. Cir. 2008) ("[T]he applicant must 'convey with reasonable clarity to those skilled in the art that, as of the filing date sought, he or she was in possession of the invention,' and *demonstrate that by disclosure in the specification of the patent*."); *Rivera v. Int'l Trade Comm'n*, 857 F.3d 1315, 1319 (Fed. Cir. 2017) ("*The specification* of a patent as filed must 'contain a written description of the invention.'" (internal citations omitted)); *Novozymes A/S v. Dupont Nutrition Biosciences APS*, 723 F.3d 1336, 1344 (Fed. Cir. 2013) ("[T]he specification must describe an invention understandable to [a] skilled artisan and show that the inventor actually invented the invention claimed. A mere wish or plan for obtaining the claimed invention does not satisfy the written description requirement.") (internal citation, quotation marks omitted). The '933 and '054 patents fail to disclose the combination of using Bluetooth to discover nearby devices and WiFi to transfer a file once a nearby device has been selected as the recipient.[9]

[9] As discussed above, Lenovo contends that because the specification lacks written description, Apple's AirDrop is prior art to the '054 and '933 patents and renders the Asserted Claims invalid under InterDigital's technical industry allegations.

b. "sending, by the WTRU, a message to transfer the selected media element to the selected WTRU" and "receiving, by the WTRU, an acceptance to transfer the selected media element to the selected WTRU"

The specification of the '933 and '054 patents lacks written description support for the claimed "sending, by the WTRU, a message to transfer the selected media element to the selected WTRU" and "receiving, by the WTRU, an acceptance to transfer the selected media element to the selected WTRU" because there is no description of "sending" a "message to transfer the selected media element" and "receiving" an "acceptance to transfer the selected media element" as claimed, or any kind of equivalent. Neither the figures nor the written text of the patents describe or support a disclosure of sending a message to transfer and receiving an acceptance to transfer. The shared specification of the '933 and '054 patents discloses that "[t]he user of the sending WTRU 101 initiates, through a user input, a send operation for a selected media element." *See, e.g.*, '054 patent at 6:7-9. It further discloses that "[t]he user input of the target WTRU 101c,t may result in the target WTRU 101c,t transmitting a radio signal to the sending WTRU 101, for example, an acknowledgement signal, the radio signal may be reported to the application processor 105." *See, e.g.*, '054 patent at 6:11-15. However, the shared specification does not disclose sending of a message to transfer the selected media element nor receiving an acceptance in response to the sent message to transfer. As such, the disclosures above are insufficient to satisfy the written description requirement. *Lockwood v. Am. Airlines, Inc.*, 107 F.3d 1565, 1572 (Fed. Cir. 1997) ("[A]ll limitations must appear in the specification."); *see also Ariad*, 598 F.3d at 1351-52 ("[T]he test requires an objective inquiry into the *four corners of the specification*" as "*it is the specification itself that must demonstrate possession*."); *PowerOasis, Inc. v. T-Mobile USA, Inc.*, 522 F.3d 1299, 1306-07 (Fed. Cir. 2008) ("[T]o satisfy the written description requirement, 'the missing descriptive matter *must necessarily be present*

in the . . . specification[.]'"), 1310 ("Obviousness simply is not enough; subject matter must be disclosed to establish possession."); *Carnegie Mellon Univ. v. Hoffmann–La Roche Inc.*, 541 F.3d 1115, 1122 (Fed. Cir. 2008) ("[T]he applicant must 'convey with reasonable clarity to those skilled in the art that, as of the filing date sought, he or she was in possession of the invention,' and *demonstrate that by disclosure in the specification of the patent*."); *Rivera v. Int'l Trade Comm'n*, 857 F.3d 1315, 1319 (Fed. Cir. 2017) ("*The specification* of a patent as filed must 'contain a written description of the invention.'" (internal citations omitted)); *Novozymes A/S v. Dupont Nutrition Biosciences APS*, 723 F.3d 1336, 1344 (Fed. Cir. 2013) ("[T]he specification must describe an invention understandable to [a] skilled artisan and show that the inventor actually invented the invention claimed. A mere wish or plan for obtaining the claimed invention does not satisfy the written description requirement.") (internal citation, quotation marks omitted).

c. "wherein the message to transfer is a request"

The specification of the '933 and '054 patents lacks written description support for the claimed "wherein the message to transfer is a request" ('933 patent claims 5, 27; '054 patent claims 6, 28). The shared specification of the '933 and '054 patents fails to satisfy the written description requirement for at least the reasons discussed above in § V.C.1.b in relation to "sending, by the WTRU, a message to transfer the selected media element to the selected WTRU" and "receiving, by the WTRU, an acceptance to transfer the selected media element to the selected WTRU".

InterDigital Exhibit 2006, p. 191
Microsoft v. InterDigital
IPR2024-00306

d. "wherein the WiFi communication is a WiFi link" / "wherein the transferring by the WTRU over WiFi uses a WiFi link" / "wherein the circuitry configured to transfer over WiFi uses a WiFi link"

The specification of the '933 and '054 patents lacks written description support for the claimed "wherein the WiFi communication is a WiFi link" ('933 patent claims 6, 28) / "wherein the transferring by the WTRU over WiFi uses a WiFi link" ('054 patent claim 7) / "wherein the circuitry configured to transfer over WiFi uses a WiFi link" ('054 patent claim 29). While the shared specification of the '933 and '054 patents contains generic reference to "WiFi," neither the figures nor the written text describe of support a "WiFi link" or "transferring … over WiFi us[ing] a WiFi link." *See, e.g.*, '054 patent at 2:36-49, 2:60-66.

e. "determining, by the WTRU, that the selected WTRU is compatible to transfer the selected media element" / "circuitry configured to determine that the selected WTRU is compatible to transfer the selected media element" / "determining, by the WTRU, that the selected another WTRU is compatible to receive the selected media" / "circuitry configured to determine, by the WTRU, that the selected another WTRU is compatible to receive the selected media"

The specification of the '933 and '054 patents lacks written description support for the claimed "determining, by the WTRU, that the selected WTRU is compatible to transfer the selected media element" ('933 patent claim 11) / "circuitry configured to determine that the selected WTRU is compatible to transfer the selected media element" ('933 patent claim 33) / "determining, by the WTRU, that the selected another WTRU is compatible to receive the selected media" ('054 patent claim 12) / "circuitry configured to determine, by the WTRU, that the selected another WTRU is compatible to receive the selected media" ('054 patent claim 34). The shared specification of the '933 and '054 patents does not contain any description of any determination of compatibility.

f. "displaying, by the WTRU, a subset of the detected plurality of WTRUs in proximity to the WTRU; and wherein the subset is not all of the detected plurality of WTRUs" / "circuitry configured to display a subset of the detected plurality of WTRUs in proximity to the WTRU; and wherein the subset is not all of the detected plurality of WTRUs"

The specification of the '933 patent lacks written description support for the claimed "displaying, by the WTRU, a subset of the detected plurality of WTRUs in proximity to the WTRU; and wherein the subset is not all of the detected plurality of WTRUs" ('933 patent claim 20) / "circuitry configured to display a subset of the detected plurality of WTRUs in proximity to the WTRU; and wherein the subset is not all of the detected plurality of WTRUs" ('933 patent claim 42). While Figure 2 of the '933 patent generically show detected WTRUs, displaying a subset of detected WTRUs "wherein the subset is not all of the detected plurality of WTRUs" is not disclosed by the figure nor the associated written description. *See, e.g.*, '933 patent at Fig. 2, 3:31-4:4.

g. "processing, by the WTRU, a user input selecting criteria; and wherein the subset of the detected plurality of WTRUs is displayed in response to the selected criteria" / "the processor is further configured to process a user input selecting criteria; and wherein the subset of the detected plurality of WTRUs is displayed in response to the selected criteria"

The specification of the '933 patent lacks written description support for the claimed "processing, by the WTRU, a user input selecting criteria; and wherein the subset of the detected plurality of WTRUs is displayed in response to the selected criteria" ('933 patent claim 21) / "the processor is further configured to process a user input selecting criteria; and wherein the subset of the detected plurality of WTRUs is displayed in response to the selected criteria" ('933 patent claim 43). In addition to the reasons described above in § V.C.1.f, the shared specification of the

’933 and ’054 patents further fails to disclose or support “a user input selecting criteria,” processing such input, or displaying a subset “in response to the selected criteria.”

h. “receiving, by the WTRU from another WTRU, a request to transfer other media; receiving, in response to accepting the request by the WTRU, the other media” / “the circuitry is further configured to receive, from another WTRU, a request to transfer other media; the circuitry is further configured to receive, in response to accepting the request by the WTRU, the other media”

The specification of the ’933 and ’054 patent lacks written description support for the claimed “receiving, by the WTRU from another WTRU, a request to transfer other media; receiving, in response to accepting the request by the WTRU, the other media” (’933 patent claim 22) / “the circuitry is further configured to receive, from another WTRU, a request to transfer other media; the circuitry is further configured to receive, in response to accepting the request by the WTRU, the other media” (’933 patent claim 44) / “receiving, by the WTRU from a different WTRU, a request to transfer other media; receiving, in response to accepting the request by the WTRU, the other media” (’054 patent claim 21) / “the circuitry further configured to receive, by the WTRU from a different WTRU, a request to transfer other media; the circuitry further configured to receive, in response to accepting the request by the WTRU, the other media” (’054 patent claim 43). The shared specification of the ’933 and ’054 patents fails to satisfy the written description requirement for at least the reasons discussed above in § V.C.1.b and V.C.1.c.

2. Lack of Enablement

A claim is invalid for lack of enablement if a POSITA would not be able to read the specification and practice the claimed invention without undue experimentation. *Amgen Inc. v. Sanofi, Aventisub LLC*, 987 F.3d 1080, 1084 (Fed. Cir. 2021). “Whether undue experimentation

is needed is not a single, simple factual determination, but rather is a conclusion reached by weighing many factual considerations." *Amgen Inc.*, 987 F.3d at 1084 (internal citation, quotation marks omitted). The factual considerations, which are known as "*Wands* factors," are "(1) the quantity of experimentation necessary, (2) the amount of direction or guidance presented, (3) the presence or absence of working examples, (4) the nature of the invention, (5) the state of the prior art, (6) the relative skill of those in the art, (7) the predictability or unpredictability of the art, and (8) the breadth of the claims." *Id*. (quoting *In re Wands*, 858 F.2d 731, 736–37 (Fed. Cir. 1988)).

For at least the same reasons set forth above with respect to written description, the following claim elements lack enablement and therefore are invalid under 35 U.S.C. § 112, 1¶:

- detecting, by the WTRU using Bluetooth, a plurality of WTRUs in proximity to the WTRU; transferring, by the WTRU using a WiFi communication, the selected media element to the selected WTRU (claim 1 of the '933 patent)
- circuitry configured to detect, using Bluetooth, a plurality of WTRUs in proximity to the WTRU; circuitry configured to transfer, using a WiFi communication, the selected media element to the selected WTRU (claim 23 of the '933 patent)
- detecting, by the WTRU over bluetooth, another WTRU; transferring, by the WTRU to the selected another WTRU over WiFi, the selected media (claim 1 of the '054 patent)
- circuitry configured to detect, by the WTRU over bluetooth, another WTRU; circuitry configured to transfer, by the WTRU to the selected another WTRU over WiFi, the selected media (claim 23 of the '054 patent).
- wherein the message to transfer is a request ('933 patent claims 5, 27; '054 patent

InterDigital Exhibit 2006, p. 195
Microsoft v. InterDigital
IPR2024-00306

claims 6, 28)

- wherein the WiFi communication is a WiFi link (’933 patent claims 6, 28)
- wherein the transferring by the WTRU over WiFi uses a WiFi link (’054 patent claim 7)
- wherein the circuitry configured to transfer over WiFi uses a WiFi link (’054 patent claim 29)
- determining, by the WTRU, that the selected WTRU is compatible to transfer the selected media element (’933 patent claim 11)
- circuitry configured to determine that the selected WTRU is compatible to transfer the selected media element (’933 patent claim 33)
- determining, by the WTRU, that the selected another WTRU is compatible to receive the selected media (’054 patent claim 12)
- circuitry configured to determine, by the WTRU, that the selected another WTRU is compatible to receive the selected media (’054 patent claim 34)
- displaying, by the WTRU, a subset of the detected plurality of WTRUs in proximity to the WTRU; and wherein the subset is not all of the detected plurality of WTRUs (’933 patent claim 20)
- circuitry configured to display a subset of the detected plurality of WTRUs in proximity to the WTRU; and wherein the subset is not all of the detected plurality of WTRUs (’933 patent claim 42)
- processing, by the WTRU, a user input selecting criteria; and wherein the subset of the detected plurality of WTRUs is displayed in response to the selected criteria (’933 patent claim 21)

InterDigital Exhibit 2006, p. 196
Microsoft v. InterDigital
IPR2024-00306

- the processor is further configured to process a user input selecting criteria; and wherein the subset of the detected plurality of WTRUs is displayed in response to the selected criteria ('933 patent claim 43)
- receiving, by the WTRU from another WTRU, a request to transfer other media; receiving, in response to accepting the request by the WTRU, the other media ('933 patent claim 22)
- the circuitry is further configured to receive, from another WTRU, a request to transfer other media; the circuitry is further configured to receive, in response to accepting the request by the WTRU, the other media ('933 patent claim 44)
- receiving, by the WTRU from a different WTRU, a request to transfer other media; receiving, in response to accepting the request by the WTRU, the other media ('054 patent claim 21)
- the circuitry further configured to receive, by the WTRU from a different WTRU, a request to transfer other media; the circuitry further configured to receive, in response to accepting the request by the WTRU, the other media ('054 patent claim 43)

A POSITA, having read the specification at the time of invention, would have not been able to make and use the claim elements set forth above without undue experimentation. With respect to the *Wands* factors, fact and expert discovery is expected to demonstrate at least that the quantity of experimentation to make and use the claimed invention was high, there were no working examples developed by the Applicants at the time of invention, and there is no disclosure of these elements.

InterDigital Exhibit 2006, p. 197
Microsoft v. InterDigital
IPR2024-00306

3. Indefiniteness

35 U.S.C. § 112, ¶ 6 limits "functional claiming," which is the practice of claiming a result without disclosing how to accomplish it. *See Williamson v. Citrix Online, LLC*, 792 F.3d 1339, 1349–51 (Fed. Cir. 2015) (en banc) (imposing new standard of indefiniteness to address "proliferation of functional claiming untethered to § 112, para. 6 and free of the strictures set forth in the statute."). Under the statute, a patentee can claim an invention by reciting the function it performs, but the scope of the patentee's right of exclusion is expressly limited to the specific solutions disclosed in the specification. This reflects a straightforward application of the fundamental principle that a patentee cannot claim more than what he or she invented. In *Williamson*, the Federal Circuit reinforced and strengthened the longstanding prohibition against functional claiming: if the claim does not identify the specific structure sufficient to achieve a claimed result, then the specification must expressly disclose the specific structure(s) that perform the claimed function. *Williamson*, 792 F.3d at 1350.

The use of "means" followed by functional language creates the rebuttable presumption that § 112, ¶ 6 applies. Yet, regardless of whether the word "means" is recited, § 112, ¶ 6 applies if a skilled artisan would not have understood the words of the claim "to have a sufficiently definite meaning as the name for structure." *Id*. at 1349; *Digit. Retail Apps, Inc. v. H-E-B*, No. 6-19-cv-00167-ADA, 2020 WL 376664, at *2 (W.D. Tex. Jan. 23, 2020) (the standard is "whether one of ordinary skill in the art would understand the claim with the functional language, in the context of the entire specification, to denote sufficiently definite structure or acts for performing the function"). If the claim merely recites functions performed by unspecified black boxes, the claim is subject to the requirements of § 112, ¶ 6. *Williamson*, 792 F.3d at 1350–51.

InterDigital Exhibit 2006, p. 198
Microsoft v. InterDigital
IPR2024-00306

Courts have held that terms like "unit" and "device" are nonce words, devoid of any structure. *Id*. at 1350 ("Generic terms such as 'mechanism,' 'element,' 'device,' and other nonce words that reflect nothing more than verbal constructs" may invoke § 112, ¶ 6 because they "typically do not connote sufficiently definite structure"). Indeed, the Patent Office identifies "unit" and "device" as "non-structural generic placeholders" that typically invoke § 112, ¶ 6. Manual of Pat. Exam. Proc. § 2181 at ¶ I.A. And "[t]he Federal Circuit has rejected the argument that replacing the word 'means' with 'unit' or 'device' takes the limitations outside of the bounds of Section 112(f)." *Via Vadis, LLC v. Buffalo Ams., Inc.*, No. A-14-CV-808-LY, 2016 WL 5239626, at *5 (W.D. Tex. Sept. 20, 2016) (affirmed in part, reversed in part on other grounds, 815 F. App'x 539 (2020)); *see also Diebold Nixdorf, Inc. v. Int'l Trade Comm'n*, 899 F.3d 1291, 1296–98 (Fed. Cir. 2018) (construing functional black box term "cheque standby unit" under § 112, ¶ 6). Various courts have also found terms like "module", "circuit", "circuitry" may be terms subject to § 112, ¶ 6. *Rain Computing, Inc. v. Samsung Elecs. Am., Inc.*, 989 F.3d 1002, 1006 (Fed. Cir. 2021) ("'Module' is a well-known nonce word that can operate as a substitute for 'means.'"); *Intelligent Automation Design, LLC v. Zimmer Biomet CMF and Thoracic, LLC*, 799 Fed.Appx. 847, 851 (Fed. Cir. 2020) (nonprecedential) (holding that "control circuit" does not "provide enough description of the structure to render the limitation structural, rather than functional"); *Power Integrations, Inc. v. Fairchild Semiconductor Int'l, Inc.*, 711 F.3d 1348, 1364 (Fed. Cir. 2013) ("in determining whether the word 'circuit' invokes means-plus-function claiming, the pivotal issue is 'whether the [circuit limitation] as properly construed recites sufficiently definite structure.'"); *Limestone Memory Sys. LLC v. Micron Tech., Inc.*, No. 815CV00278DOCKESX, 2019 WL 6655273, at *20 (C.D. Cal. Sept. 11, 2019) (holding "activation control circuit" to be subject to § 112, ¶ 6 and finding the term to be indefinite); *see*

also Massachusetts Inst. of Tech. & Elecs. For Imaging, Inc. v. Abacus Software, 462 F.3d 1344, 1357 (Fed. Cir. 2006) (holding that "the term 'circuitry' in claim 1 is limited to hardware" and "does not include software.").

Once a term is determined to fall within § 112, ¶ 6, that claim is indefinite unless the specification "clearly links or associates" a particular structure with the function recited in the claims. *Williamson*, 792 F.3d. at 1352. That structure must be "adequate" to achieve the claimed function. *Id.* "[I]f a person of ordinary skill in the art would be unable to recognize the structure in the specification and associate with the corresponding function in the claim, a means-plus-function clause is indefinite." *Id.* However, the "testimony of one of ordinary skill in the art cannot supplant the total absence of structure from the specification." *Id.* at 1354 (internal citation omitted).

For claims directed towards computer-implemented inventions, the structure disclosed in the specification must be more than a general-purpose computer or microprocessor. *Aristocrat Techs. Australia PTY Ltd. v. Int'l Game Tech.,* 521 F.3d 1328, 1333 (Fed. Cir. 2008) (holding that where a means-plus-function limitation is implemented using general-purpose computer, the specification must disclose the algorithm to achieve the claimed function). This is because general purpose computers can be programmed to perform different tasks in different ways and such a disclosure would effectively provide no limit on the scope of the claims. Thus, the corresponding structure for a computer-implemented function is not a computer; it is a specific algorithm that allows a general-purpose computer or microprocessor to perform the claimed function. *Id.* An algorithm is a fixed step-by-step procedure for accomplishing a given result. A specification that fails to express the procedural algorithm as a mathematical formula, in prose, or as a flow chart will lack the requisite corresponding structure required by § 112, ¶ 6 and the

InterDigital Exhibit 2006, p. 200
Microsoft v. InterDigital
IPR2024-00306

claims would therefore be invalid. *Arendi S.A.R.L. v. LG Electronics, Inc.*, 2019 WL 3891150 at *10 (D. Del. 2019) (finding a claim invalid, noting in the § 112, ¶ 6 context that "the specification fails to disclose any actual ***algorithm*** – whether in prose, as a mathematical formula, as a flow chart, or in any other suitable format – that could be followed to determine ***which text***, of all of the text in the document, is a name or address") (emphasis in original).

The following limitations recited in the '933 and '054 patents Asserted Claims are indefinite in whole, in part or in combination.

- "circuitry configured to process, from a touch display, an input to select media in an application" ('054 patent claim 23)
- "a processor configured to process a touchscreen input to select a media element" ('933 patent claim 23)
- "circuitry configured to detect, by the WTRU over bluetooth, another WTRU" ('054 patent claim 23)
- "circuitry configured to detect, using Bluetooth, a plurality of WTRUs in proximity to the WTRU" ('933 patent claim 23)
- "the circuitry further configured to process another input from the touch display to select the another WTRU" ('054 patent claim 23)
- "the processor is further configured to process another touchscreen input to select a WTRU of the plurality of WTRUs" ('933 patent claim 23)
- "circuitry configured to send, by the WTRU to the selected another WTRU, a message to transfer the selected media" ('054 patent claim 23)
- "circuitry configured to send a message to transfer the selected media element to the selected WTRU" ('933 patent claim 23)

InterDigital Exhibit 2006, p. 201
Microsoft v. InterDigital
IPR2024-00306

- “circuitry configured to receive, by the WTRU, an acceptance to transfer the selected media” (’054 patent claim 23)
- “circuitry configured to receive an acceptance to transfer the selected media element to the selected WTRU” (’933 patent claim 23)
- “circuitry configured to transfer, by the WTRU to the selected another WTRU over WiFi, the selected media” (’054 patent claim 23)
- “circuitry configured to transfer, using a WiFi communication, the selected media element to the selected WTRU” (’933 patent claim 23)
- “wherein the message to transfer is a request” (’933 patent claim 27; ’054 patent claims 28)
- “wherein the WiFi communication is a WiFi link” (’933 patent claim 28)
- wherein the circuitry configured to transfer over WiFi uses a WiFi link (’054 patent claim 29)
- “circuitry configured to determine that the selected WTRU is compatible to transfer the selected media element” (’933 patent claim 33)
- “circuitry configured to determine, by the WTRU, that the selected another WTRU is compatible to receive the selected media” (’054 patent claim 34)
- “circuitry configured to display a subset of the detected plurality of WTRUs in proximity to the WTRU; and wherein the subset is not all of the detected plurality of WTRUs” (’933 patent claim 42)
- “the processor is further configured to process a user input selecting criteria; and wherein the subset of the detected plurality of WTRUs is displayed in response to the selected criteria” (’933 patent claim 43)

- "the circuitry is further configured to receive, from another WTRU, a request to transfer other media; the circuitry is further configured to receive, in response to accepting the request by the WTRU, the other media" ('933 patent claim 44)
- "the circuitry further configured to receive, by the WTRU from a different WTRU, a request to transfer other media; the circuitry further configured to receive, in response to accepting the request by the WTRU, the other media" ('054 patent claim 43)

Lenovo reserves the right to identify additional terms as indefinite during the claim construction process.

VI. INVALIDITY UNDER 35 U.S.C. § 101

Lenovo identifies the following claims that Lenovo contends are directed to ineligible subject matter under 35 U.S.C. § 101:

- **'877 Patent:** Claim 1, 2, 4, 6, 7, and 8
- **'859 Patent:** Claims 10, 15
- **'556 Patent:** Claims 1-8
- **'054 and '933 Patents:** All claims

Section 101 provides that "[w]hoever invents or discovers any new and useful process, machine, manufacture, or composition of matter, or any new and useful improvement thereof, may obtain a patent therefor, subject to the conditions and requirements of this title." 35 U.S.C. § 101. The Supreme Court has "long held that this provision contains an important implicit exception: Laws of nature, natural phenomena, and abstract ideas are not patentable." *Alice Corp. v. CLS Bank Int'l*, 134 S. Ct. 2347, 2354 (2014) (quoting *Ass'n for Molecular Pathology v. Myriad*

InterDigital Exhibit 2006, p. 203
Microsoft v. InterDigital
IPR2024-00306

Genetics, Inc., 133 S. Ct. 2107, 2116 (2013)). "[S]uch discoveries are manifestations of . . . nature, free to all men and reserved exclusively to none." *Mayo Collaborative Servs. v. Prometheus Labs., Inc.*, 132 S. Ct. 1289, 1293 (2012) (quotations and citations omitted). The concern that underlies "this exclusionary principle" is "one of preemption." *Alice,* 134 S. Ct. at 2354. Thus, patents that seek to preempt others from using "the basic tools of scientific and technological work" are invalid. *Id.*

The Supreme Court in *Alice* set forth a two-step test for "distinguishing patents that claim laws of nature, natural phenomena, and abstract ideas from those that claim patent-eligible applications of those concepts." *Alice*, 134 S. Ct. at 2355.

First, the Court must "determine whether the claims at issue are directed to one of those patent-ineligible concepts," such as an abstract idea. *Id.* If the Court determines that the claims are directed to a patent-ineligible concept such as an abstract idea, then:

Second, the Court must "consider the elements of each claim both individually and as an ordered combination to determine whether the additional elements transform the nature of the claim into a patent-eligible application." *Id.* (citation and quotation marks omitted). The Supreme Court describes this second step "as a search for an inventive concept—*i.e.*, an element or combination of elements that is sufficient to ensure that the patent in practice amounts to significantly more than a patent upon the ineligible concept itself." *Id.* (quotation marks and brackets omitted). For example, "[s]tating that an abstract idea while adding the words 'apply it' is not enough for patent eligibility. Nor is limiting the use of an abstract idea 'to a particular technological environment.'" *Id.* at 2358 (internal citations and quotations omitted).

All claims of the Asserted Patents are invalid because they are directed to a patent-ineligible abstract idea under § 101 and applicable case law. *See Alice*, 134 S. Ct. at 2355; *In re*

InterDigital Exhibit 2006, p. 204
Microsoft v. InterDigital
IPR2024-00306

TLI Commc'ns LLC Patent Litig., 823 F.3d 607, 613 (Fed. Cir. 2016); *Intellectual Ventures I LLC v. Capital One Bank (USA)*, 792 F.3d 1363, 1369 (Fed. Cir. 2015); *Digitech Image Techs., LLC v. Elecs. for Imaging, Inc.*, 758 F.3d 1344, 1351 (Fed. Cir. 2014); *Content Extraction & Transmission LLC v. Wells Fargo Bank, Nat'l Ass'n*, 776 F.3d 1343, 1348 (Fed. Cir. 2014); *Ultramercial, Inc. v. Hulu, LLC*, 772 F.3d 709, 719 (Fed. Cir. 2014); *BuySAFE, Inc. v. Google Inc.*, 765 F.3d 1350, 1355 (Fed. Cir. 2014); *Internet Patents Corp. v. Active Network, Inc.*, 790 F.3d 1343, 1347-48 (Fed. Cir. 2015); *Intellectual Ventures I LLC v. Capital One Fin. Corp.*, 850 F.3d 1332, 1341 (Fed. Cir. 2017); *FairWarning IP, LLC v. Iatric Sys., Inc.*, 839 F.3d 1089, 1093 (Fed. Cir. 2016); *Elec. Power Grp., LLC v. Alston S.A.*, 830 F.3d 1350, 1354 (Fed. Cir. 2016); *Affinity Labs of Tex., LLC v. Amazon.com Inc.*, 838 F.3d 1266, 1267-68 (Fed. Cir. 2016); *BSG Tech. v. Buyseasons*, 899 F.3d 1281, 1287 (Fed. Cir. 2018); *Burnett v. Panasonic*, No. 2018-1234, 2018 WL 3434533, at *5 (Fed. Cir. July 16, 2018); *In re Villena*, No. 2017-2069, 2018 WL 4145863, at *2 (Fed. Cir. Aug. 29, 2018); *Interval Licensing v. AOL*, 896 F.3d 1335, 1338, 1345-48 (Fed. Cir. 2018); *Intellectual Ventures I v. Symantec*, No. 2017-1814, 2018 WL 1324863, at *1, n.1 (Fed. Cir. Mar. 15, 2018); *Zuili v. Google*, No. 2017-2161, 2018 WL 798666, at *2 (Fed. Cir. Feb. 9, 2018); *WhitServe v. Donuts*, 809 F. App'x 929, 932 (Fed. Cir. 2020); *Elec. Commc'n Techs. v. ShoppersChoice.com*, 958 F.3d 1178, 2020 WL 2479692, at *1-*2 (Fed. Cir. 2020); *Dropbox v. Synchronoss Techs.*, 815 F. App'x 529, 533 (Fed. Cir. 2020); *Am. Axle & Mfg. v. Neapco Holdings*, 967 F.3d 1285, 1295 (Fed. Cir. 2020); *Chamberlain Grp. v. Techtronic Indus.*, 935 F.3d 1341, 1348 (Fed. Cir. 2019), *cert. denied*, 2020 WL 5882260 (2020); *Innovation Scis. v. Amazon.com*, 778 F. App'x 859, 863 (Fed. Cir. 2019); *Ameranth v. Domino's Pizza*, 792 F. App'x 780, 788 (Fed. Cir. 2019); *ChargePoint v. SemaConnect*, 920 F.3d 759, 766 (Fed. Cir. 2019), *cert. denied*, 140 S. Ct. 983 (2020); *SAP Am. v. Investpic*, 898 F.3d 1161, 1166 (Fed. Cir. 2018); *Voter Verified v. Elec. Sys. &*

InterDigital Exhibit 2006, p. 205
Microsoft v. InterDigital
IPR2024-00306

Software, 887 F.3d 1376, 1384 (Fed. Cir. 2018); *Glasswall Sols. v. Clearswift*, No. 2018-1407, 2018 WL 6720014, at *2 (Fed. Cir. Dec. 20, 2018); *Smartflash v. Apple*, 680 F. App'x 977, 983 (Fed. Cir. 2018); *Location Based Servs. v. Niantic*, 295 F. Supp. 3d 1031, 1040, 1045-49 (N.D. Cal. 2017), *aff'd* 742 F. App'x 506 (Fed. Cir. 2018).

A. *The '877 Patent Claims Ineligible Subject Matter*

The Asserted Claims of the '877 patent are invalid under 35 U.S.C. § 101 pursuant to the two-step analysis set forth in *Alice*.

First, the Asserted Claims of the '877 patent are directed to the abstract idea of applying jointly two filters. This is nothing more than a series of mathematical operations performed on electronic data. For example, claim 1 of the '877 patent recites a "wherein said single vertical filter GFv applied on a pixel s is such that GFv(s)=MCIFv(SCFv(s)), where MCIFv is a vertical motion compensation interpolation filter and SCFv is a vertical resampling filter, MCIFv and SCFv being applied jointly and wherein said single horizontal filter GFH applied on a pixel u is such that GFH(u)=MCIFH(SCFH(u)), where MCIFH is a horizontal motion compensation interpolation filter and SCFH is a horizontal resampling filter, MCIFH and SCFH being applied jointly". This is not a patent eligible concept. Indeed, numerous courts – including the Federal Circuit – have held that "encoding and decoding" of electronic data is an abstract idea. *See, e.g., Sensormatic Elecs., LLC v. Wyze Labs, Inc.*, No. 2020-2320, 2021 WL 2944838, at *3 (Fed. Cir. July 14, 2021) ("The concept of encoding or decoding image data is abstract, even if for the purpose of transmitting files to devices with less memory or bandwidth or by transcoding data into multiple formats."); *Adaptive Streaming Inc. v. Netflix, Inc.*, 836 F. App'x 900, 903 (Fed. Cir. 2020) ("[T]he ideas of encoding and decoding image data and of converting formats, including when data is received from one module and sent along through another, are by

themselves abstract ideas . . . ."); *RecogniCorp, LLC v. Nintendo Co.*, 855 F.3d 1322, 1326 (Fed. Cir. 2017) ("This method reflects standard encoding and decoding, an abstract concept long utilized to transmit information."). Applying a mathematical model by which to perform encoding/decoding does not render the claims non-abstract. *See RecogniCorp*, 855 F.3d at 1326 ("Adding one abstract idea (math) to another abstract idea (encoding and decoding) does not render the claim non-abstract."). Nor does the fact that the encoded media data is transmitted and/or received. *See, e.g., Two-Way Media Ltd. v. Comcast Commc'ns LLC*, 874 F.3d 1329 (Fed. Cir. 2017) (holding patents related to streaming audio or visual information to be patent ineligible); *Chamberlain Grp., Inc. v. Techtronic Indus. Co.*, 935 F.3d 1341, 1346-49 (Fed. Cir. 2019).

In *Alice* Step One, it is "relevant to ask whether the claims are directed to an improvement in computer functionality versus being directed to an abstract idea." *Certain Elec. Devices*, 2020 WL 6441422, at *5 (internal citations and quotation marks omitted). The Asserted Claims cannot pass muster here because "[g]eneralized steps to be performed on a computer using conventional computer activity are abstract[.]" *RecogniCorp*, 855 F.3d at 1326 (quotation marks omitted). For instance, in the Federal Circuit's view, a patent claim for taking digital images using a telephone, storing the images, and then transmitting the images to a server which receives the images, failed *Alice* Step One by being directed only to conventional or generic technology:

> Contrary to TLI's arguments on appeal, the claims here are not directed to a specific improvement to computer functionality. Rather, ***they are directed to the use of conventional or generic technology in a nascent but well-known environment***. . . . The specification does not describe a new telephone, a new server, or a new physical combination of the two. ***The specification fails to provide any technical details for the tangible components***, but

InterDigital Exhibit 2006, p. 207
Microsoft v. InterDigital
IPR2024-00306

> instead predominantly ***describes the system and methods in purely functional terms.*** For example, the "telephone unit" of the claims is described as having "the standard features of a telephone unit". . . Likewise, ***the server is described simply in terms of performing generic computer functions*** such as storing, receiving, and extracting data.

TLI Commc'ns LLC v. AV Auto., L.L.C., 823 F.3d 607, 610, 612 (Fed. Cir. 2016). In essence, the *TLI* claim failed *Alice* Step One because the specification did not provide technical details for the components and instead described the system and methods "in purely functional terms," where the functions were generic to a computer. *Id.*

The Asserted Claims here, as in *TLI*, are ***not*** directed to a specific improvement to computer components. As the patent specification teaches, the claimed coding and decoding of electronic data is performed using generic and conventional computer components. As in *TLI*, the patent specification does ***not*** describe a new microprocessor, a new memory, or any new computer functionality. *See TLI*, 823 F.3d at 612 ("The specification does not describe a new telephone, a new server, or a new physical combination of the two.")

The "machine-or-transformation" test does not rescue the Asserted Claims from patent ineligibility. Indeed, whether a claim can pass the machine-or-transformation test has no bearing on its abstractness at *Alice* Step One because, "[w]hile the Supreme Court has explained that the machine-or-transformation test can provide a 'useful clue' in the second step of *Alice*, passing the test alone is insufficient to overcome [the patentee]'s above-described failings under step two." *Solutran*, 931 F.3d at 1169; *Bozeman Fin. LLC v. Fed. Rsrv. Bank of Atlanta*, 955 F.3d 971, 980 (Fed. Cir. 2020) (finding that claim failed machine-or-transformation test at *Alice* Step Two).

Regardless, the Asserted Claims here do not pass either prong of the machine-or-transformation test. To meet the "machine" prong of the test, "the subject patent must disclose

InterDigital Exhibit 2006, p. 208
Microsoft v. InterDigital
IPR2024-00306

the use of an apparatus *specific to* the claimed invention." *Intell. Ventures I LLC v. Erie Indem. Co.*, 711 F. App'x 1012, 1019 (Fed. Cir. 2017) (emphasis in original). But purely generic and conventional tools cannot satisfy that test. *Id.* Here, any claimed "machine" is just generic computer components. Because the claims are not tied to a novel machine or apparatus specific to the claimed invention, they fail the machine prong of the machine-or-transformation test. *Ultramercial, Inc. v. Hulu, LLC*, 772 F.3d 709, 716 (Fed. Cir. 2014) (holding that claim directed to "general purpose computer" failed the "machine" prong as it was not directed to a "novel machine or apparatus"). And the Supreme Court has held that claims reciting generic computer elements to implement abstract ideas, as here, are not patent-eligible. *Alice*, 573 U.S. at 226-27.

To meet the "transformation" prong of the test, a claim must "transform an article into a different state or thing," and the "***transformation must be central to the purpose of the claimed process***." *In re Bilski*, 545 F.3d 943, 962 (Fed. Cir. 2008), *aff'd*, 561 U.S. 593 (2010). Here, the Asserted Claims merely use well-known mathematical protocols as part of the overarching steps of coding and decoding image data. Because the Asserted Claims merely cover generic computer components executing software and/or firmware to perform generic computation functionalities, they cannot pass, and have not passed, the machine-or-transformation test.

For all of the reasons discussed above, the Asserted Claims are directed to an abstract idea, not a specific technological improvement, and fail the analysis at *Alice* Step One and necessitating consideration of *Alice* Step Two.

Under *Alice* Step Two, the additional limitations of the Asserted Claims fail to transform the abstract idea into patentable subject matter. *Alice*, 134 S. Ct. at 2355. For a claim directed at an abstract concept to be nonetheless patent eligible under *Alice* Step Two, "an inventive concept must be evident in the claims," *RecogniCorp*, 855 F.3d at 1327, and it must provide

"significantly more" than the abstract idea itself, *BSG*, 899 F.3d at 1289-90. In performing this analysis, a court must scrutinize the claim elements "both individually and 'as an ordered combination' to determine whether the additional elements 'transform the nature of the claim' into a patent-eligible application." *Enfish*, 822 F.3d at 1334 (quoting *Alice*, 573 U.S. at 217). Elements that are "well-understood, routine, conventional," or "purely functional" cannot confer patent-eligibility. *Alice*, 573 U.S. at 225-26 (citation omitted); *TLI*, 823 F.3d at 611-12. "[I]n determining what is well-known or conventional," "[t]he written description is particularly useful." *Intell. Ventures I*, 838 F.3d at 1317. Here, the Asserted Claims fail *Alice* Step Two.

The Asserted Claims fail to provide significantly more than the abstract concept. To the extent structure is claimed in any of the claims, that structure is nothing more than general purpose computer components performing general purpose computer functions. Such general purpose structure is insufficient to transform the nature of the claims into patent-eligible subject matter. Here, the claims merely recite generic, computer-implemented "circuit configured to" perform the abstract idea. This fails, however, to transform an abstract idea into something patentable. *See Alice,* 134 S. Ct. 2357 (transformation into a patent-eligible application "requires more than simply stating the abstract idea while adding the words 'apply it'" (cleaned up) and noting that "[t]he introduction of a computer into the claims does not alter the analysis at *Mayo* step two."); *BSG Tech LLC v. Buyseasons, Inc.*, 899 F.3d 1281, 1291 (Fed. Cir. 2018) ("At *Alice* step two, it is irrelevant whether [the abstract idea] may have been non-routine or unconventional as a factual matter" when the claims fail to provide "significantly more" than the abstract idea itself).

Finally, nothing about the "apply jointly" of claim elements "transform[s]" the nature of the claims into a patent-eligible invention. *Alice*, 134 S. Ct. at 2355. The sequence in the claims

InterDigital Exhibit 2006, p. 210
Microsoft v. InterDigital
IPR2024-00306

merely recites the sequence one would expect to occur in a system for coding and decoding media data. *See Sensormatic Elecs. v. Wyze Labs., Inc.*, No. 2020-2320, at *7 (Fed. Cir. July 14, 2021) (finding ordered combination not inventive because "[p]roviding generic devices that communicate with each other [] is a conventional application of an abstract idea").

Scrutinizing the Asserted Claims' limitations individually or as an ordered combination leads to the same conclusion: they involve well-understood, routine, and conventional activities. Indeed, all of the claimed encoding and decoding steps were well-known before the priority dates of the Asserted Patents. The specification acknowledges that many of the claimed coding and decoding steps were known in the prior art. *See, e.g.*, '877 patent at 1:25-2:14. And the invalidity analysis under 35 U.S.C. §§ 102, 103 set forth, *supra*, in these Invalidity Contentions, including the attached prior art claim charts, demonstrate that the claimed coding and decoding steps involve well-understood, routine, and conventional activities that were well-known before the priority dates of the Asserted Patents.

Therefore, the claimed abstract concept implemented using conventional computer components and conventional technology does not represent an inventive concept at *Alice* Step Two. The Asserted Claims are therefore invalid under 35 U.S.C. § 101.

B. *The '859 Patents Claim Ineligible Subject Matter*

The Asserted Claims of '859 patents are invalid under 35 U.S.C. § 101 pursuant to the two-step analysis set forth in *Alice*.

First, the Asserted Claims of the '859 patent are directed to the abstract idea of updating a probability model during arithmetic decoding of video for future use. The abstract concept of updating information for future use are old ideas that have been performed by people in numerous industries. For example, claim 15 of the '878 patent recites a "[a]rithmetic decoding

InterDigital Exhibit 2006, p. 211
Microsoft v. InterDigital
IPR2024-00306

method" that includes "selecting using said probability model identifier a probability model" and "updating said current probability model according to the decoding of said current symbol." This is not a patent eligible concept. Indeed, numerous courts – including the Federal Circuit – have held that "encoding and decoding" of electronic data is an abstract idea. *See, e.g., Sensormatic Elecs., LLC v. Wyze Labs, Inc.*, No. 2020-2320, 2021 WL 2944838, at *3 (Fed. Cir. July 14, 2021) ("The concept of encoding or decoding image data is abstract, even if for the purpose of transmitting files to devices with less memory or bandwidth or by transcoding data into multiple formats."); *Adaptive Streaming Inc. v. Netflix, Inc.*, 836 F. App'x 900, 903 (Fed. Cir. 2020) ("[T]he ideas of encoding and decoding image data and of converting formats, including when data is received from one module and sent along through another, are by themselves abstract ideas . . . ."); *RecogniCorp, LLC v. Nintendo Co.*, 855 F.3d 1322, 1326 (Fed. Cir. 2017) ("This method reflects standard encoding and decoding, an abstract concept long utilized to transmit information."). And the generic "units" for choosing and applying a mathematical model by which to perform this encoding/decoding does not render the claims non-abstract. *See RecogniCorp*, 855 F.3d at 1326 ("Adding one abstract idea (math) to another abstract idea (encoding and decoding) does not render the claim non-abstract."). Nor does the fact that the encoded media data is transmitted and/or received. *See, e.g., Two-Way Media Ltd. v. Comcast Commc'ns LLC*, 874 F.3d 1329 (Fed. Cir. 2017) (holding patents related to streaming audio or visual information to be patent ineligible); *Chamberlain Grp., Inc. v. Techtronic Indus. Co.*, 935 F.3d 1341, 1346-49 (Fed. Cir. 2019).

In *Alice* Step One, it is "relevant to ask whether the claims are directed to an improvement in computer functionality versus being directed to an abstract idea." *Certain Elec. Devices*, 2020 WL 6441422, at *5 (internal citations and quotation marks omitted). The

Asserted Claims cannot pass muster here because "[g]eneralized steps to be performed on a computer using conventional computer activity are abstract[.]" *RecogniCorp*, 855 F.3d at 1326 (quotation marks omitted). For instance, in the Federal Circuit's view, a patent claim for taking digital images using a telephone, storing the images, and then transmitting the images to a server which receives the images, failed *Alice* Step One by being directed only to conventional or generic technology:

> Contrary to TLI's arguments on appeal, the claims here are not directed to a specific improvement to computer functionality. Rather, ***they are directed to the use of conventional or generic technology in a nascent but well-known environment***. . . . The specification does not describe a new telephone, a new server, or a new physical combination of the two. ***The specification fails to provide any technical details for the tangible components***, but instead predominantly ***describes the system and methods in purely functional terms.*** For example, the "telephone unit" of the claims is described as having "the standard features of a telephone unit". . . Likewise, ***the server is described simply in terms of performing generic computer functions*** such as storing, receiving, and extracting data.

TLI Commc'ns LLC v. AV Auto., L.L.C., 823 F.3d 607, 610, 612 (Fed. Cir. 2016). In essence, the *TLI* claim failed *Alice* Step One because the specification did not provide technical details for the components and instead described the system and methods "in purely functional terms," where the functions were generic to a computer. *Id.*

The Asserted Claims here, as in *TLI*, are ***not*** directed to a specific improvement to computer components. As the patent specification teaches, the claimed coding and decoding of electronic data is performed using generic and conventional computer components. As in *TLI*, the patent specification does ***not*** describe a new microprocessor, a new memory, or any new

computer functionality. *See TLI*, 823 F.3d at 612 ("The specification does not describe a new telephone, a new server, or a new physical combination of the two.")

The "machine-or-transformation" test does not rescue the Asserted Claims from patent ineligibility. Indeed, whether a claim can pass the machine-or-transformation test has no bearing on its abstractness at *Alice* Step One because, "[w]hile the Supreme Court has explained that the machine-or-transformation test can provide a 'useful clue' in the second step of *Alice*, passing the test alone is insufficient to overcome [the patentee]'s above-described failings under step two." *Solutran*, 931 F.3d at 1169; *Bozeman Fin. LLC v. Fed. Rsrv. Bank of Atlanta*, 955 F.3d 971, 980 (Fed. Cir. 2020) (finding that claim failed machine-or-transformation test at *Alice* Step Two).

Regardless, the Asserted Claims here do not pass either prong of the machine-or-transformation test. To meet the "machine" prong of the test, "the subject patent must disclose the use of an apparatus *specific to* the claimed invention." *Intell. Ventures I LLC v. Erie Indem. Co.*, 711 F. App'x 1012, 1019 (Fed. Cir. 2017) (emphasis in original). But purely generic and conventional tools cannot satisfy that test. *Id.* Here, any claimed "machine" is just generic computer components. Because the claims are not tied to a novel machine or apparatus specific to the claimed invention, they fail the machine prong of the machine-or-transformation test. *Ultramercial, Inc. v. Hulu, LLC*, 772 F.3d 709, 716 (Fed. Cir. 2014) (holding that claim directed to "general purpose computer" failed the "machine" prong as it was not directed to a "novel machine or apparatus"). And the Supreme Court has held that claims reciting generic computer elements to implement abstract ideas, as here, are not patent-eligible. *Alice*, 573 U.S. at 226-27.

To meet the "transformation" prong of the test, a claim must "transform an article into a different state or thing," and the "***transformation must be central to the purpose of the claimed***

process." *In re Bilski*, 545 F.3d 943, 962 (Fed. Cir. 2008), *aff'd*, 561 U.S. 593 (2010). Here, the Asserted Claims merely use well-known mathematical protocols as part of the overarching steps of coding and decoding image data. Because the Asserted Claims merely cover generic computer components executing software and/or firmware to perform generic computation functionalities, they cannot pass, and have not passed, the machine-or-transformation test.

For all of the reasons discussed above, the Asserted Claims are directed to an abstract idea, not a specific technological improvement, and fail the analysis at *Alice* Step One and necessitating consideration of *Alice* Step Two.

Under *Alice* Step Two, the additional limitations of the Asserted Claims fail to transform the abstract idea into patentable subject matter. *Alice*, 134 S. Ct. at 2355. For a claim directed at an abstract concept to be nonetheless patent eligible under *Alice* Step Two, "an inventive concept must be evident in the claims," *RecogniCorp*, 855 F.3d at 1327, and it must provide "significantly more" than the abstract idea itself, *BSG*, 899 F.3d at 1289-90. In performing this analysis, a court must scrutinize the claim elements "both individually and 'as an ordered combination' to determine whether the additional elements 'transform the nature of the claim' into a patent-eligible application." *Enfish*, 822 F.3d at 1334 (quoting *Alice*, 573 U.S. at 217). Elements that are "well-understood, routine, conventional," or "purely functional" cannot confer patent-eligibility. *Alice*, 573 U.S. at 225-26 (citation omitted); *TLI*, 823 F.3d at 611-12. "[I]n determining what is well-known or conventional," "[t]he written description is particularly useful." *Intell. Ventures I*, 838 F.3d at 1317. Here, the Asserted Claims fail *Alice* Step Two.

The Asserted Claims fail to provide significantly more than the abstract concept. To the extent structure is claimed in any of the claims, that structure is nothing more than general purpose computer components performing general purpose computer functions. Such general

purpose structure is insufficient to transform the nature of the claims into patent-eligible subject matter. Here, the claims merely recite generic, computer-implemented "units" to perform the abstract idea. This fails, however, to transform an abstract idea into something patentable. *See Alice,* 134 S. Ct. 2357 (transformation into a patent-eligible application "requires more than simply stating the abstract idea while adding the words 'apply it'" (cleaned up) and noting that "[t]he introduction of a computer into the claims does not alter the analysis at *Mayo* step two."); *BSG Tech LLC v. Buyseasons, Inc.*, 899 F.3d 1281, 1291 (Fed. Cir. 2018) ("At *Alice* step two, it is irrelevant whether [the abstract idea] may have been non-routine or unconventional as a factual matter" when the claims fail to provide "significantly more" than the abstract idea itself).

Finally, nothing about the "selecting," "adding," and "updating" of probability models of claim elements "transform[s]" the nature of the claims into a patent-eligible invention. *Alice*, 134 S. Ct. at 2355. The sequence in the claims merely recites the sequence one would expect to occur in a system for coding and transmitting media data, or receiving and decoding media data. Nothing in the order or arrangement of limitations in the claims, therefore, recites any inventive concept. *See Sensormatic Elecs. v. Wyze Labs., Inc.*, No. 2020-2320, at *7 (Fed. Cir. July 14, 2021) (finding ordered combination not inventive because "[p]roviding generic devices that communicate with each other [] is a conventional application of an abstract idea").

Scrutinizing the Asserted Claims' limitations individually or as an ordered combination leads to the same conclusion: they involve well-understood, routine, and conventional activities. Indeed, all of the claimed encoding and decoding steps were well-known before the priority dates of the Asserted Patents. The specification acknowledges that arithmetic coding was known in the prior art. Similarly, the specification acknowledges the updating of probability models was also known. *See, e.g.*, '859 patent at 1:20-2:11. And the invalidity analysis under 35 U.S.C.

§§ 102, 103 set forth, *supra*, in these Invalidity Contentions, including the attached prior art claim charts, demonstrate that the claimed coding and decoding steps involve well-understood, routine, and conventional activities that were well-known before the priority dates of the Asserted Patents.

Therefore, the claimed abstract concept implemented using conventional computer components and conventional technology does not represent an inventive concept at *Alice* Step Two. The Asserted Claims are therefore invalid under 35 U.S.C. § 101.

C. *The '556 Patents Claim Ineligible Subject Matter*

The Asserted Claims of '556 patent are invalid under 35 U.S.C. § 101 pursuant to the two-step analysis set forth in *Alice*.

First, the Asserted Claims of the '556 patent are directed to the abstract idea of applying an in-loop filters in succession to improve image quality. This is nothing more than applying a series known mathematical operations to electronic data. For example, claim 1 of the '556 patent recites a "performing in-loop filtering to reduce at least a first and a second type of coding artifact using at least two filters in succession." This is not a patent eligible concept. Indeed, numerous courts – including the Federal Circuit – have held that "encoding and decoding" of electronic data is an abstract idea. *See, e.g., Sensormatic Elecs., LLC v. Wyze Labs, Inc*., No. 2020-2320, 2021 WL 2944838, at *3 (Fed. Cir. July 14, 2021) ("The concept of encoding or decoding image data is abstract, even if for the purpose of transmitting files to devices with less memory or bandwidth or by transcoding data into multiple formats."); *Adaptive Streaming Inc. v. Netflix, Inc.*, 836 F. App'x 900, 903 (Fed. Cir. 2020) ("[T]he ideas of encoding and decoding image data and of converting formats, including when data is received from one module and sent along through another, are by themselves abstract ideas . . . ."); *RecogniCorp, LLC v. Nintendo*

InterDigital Exhibit 2006, p. 217
Microsoft v. InterDigital
IPR2024-00306

Co., 855 F.3d 1322, 1326 (Fed. Cir. 2017) ("This method reflects standard encoding and decoding, an abstract concept long utilized to transmit information."). And the generic "units" for choosing and applying a mathematical model by which to perform this encoding/decoding does not render the claims non-abstract. *See RecogniCorp*, 855 F.3d at 1326 ("Adding one abstract idea (math) to another abstract idea (encoding and decoding) does not render the claim non-abstract."). Nor does the fact that the encoded media data is transmitted and/or received. *See, e.g., Two-Way Media Ltd. v. Comcast Commc'ns LLC*, 874 F.3d 1329 (Fed. Cir. 2017) (holding patents related to streaming audio or visual information to be patent ineligible); *Chamberlain Grp., Inc. v. Techtronic Indus. Co.*, 935 F.3d 1341, 1346-49 (Fed. Cir. 2019).

In *Alice* Step One, it is "relevant to ask whether the claims are directed to an improvement in computer functionality versus being directed to an abstract idea." *Certain Elec. Devices*, 2020 WL 6441422, at *5 (internal citations and quotation marks omitted). The Asserted Claims cannot pass muster here because "[g]eneralized steps to be performed on a computer using conventional computer activity are abstract[.]" *RecogniCorp*, 855 F.3d at 1326 (quotation marks omitted). For instance, in the Federal Circuit's view, a patent claim for taking digital images using a telephone, storing the images, and then transmitting the images to a server which receives the images, failed *Alice* Step One by being directed only to conventional or generic technology:

> Contrary to TLI's arguments on appeal, the claims here are not directed to a specific improvement to computer functionality. Rather, ***they are directed to the use of conventional or generic technology in a nascent but well-known environment***. . . . The specification does not describe a new telephone, a new server, or a new physical combination of the two. ***The specification fails to provide any technical details for the tangible components***, but instead predominantly ***describes the system and methods in purely functional terms.*** For example, the "telephone unit" of the claims

InterDigital Exhibit 2006, p. 218
Microsoft v. InterDigital
IPR2024-00306

> is described as having "the standard features of a telephone unit". . . Likewise, ***the server is described simply in terms of performing generic computer functions*** such as storing, receiving, and extracting data.

TLI Commc'ns LLC v. AV Auto., L.L.C., 823 F.3d 607, 610, 612 (Fed. Cir. 2016). In essence, the *TLI* claim failed *Alice* Step One because the specification did not provide technical details for the components and instead described the system and methods "in purely functional terms," where the functions were generic to a computer. *Id.*

The Asserted Claims here, as in *TLI*, are ***not*** directed to a specific improvement to computer components. As the patent specification teaches, the claimed coding and decoding of electronic data is performed using generic and conventional computer components. As in *TLI*, the patent specification does ***not*** describe a new microprocessor, a new memory, or any new computer functionality. *See TLI*, 823 F.3d at 612 ("The specification does not describe a new telephone, a new server, or a new physical combination of the two.")

The "machine-or-transformation" test does not rescue the Asserted Claims from patent ineligibility. Indeed, whether a claim can pass the machine-or-transformation test has no bearing on its abstractness at *Alice* Step One because, "[w]hile the Supreme Court has explained that the machine-or-transformation test can provide a 'useful clue' in the second step of *Alice*, passing the test alone is insufficient to overcome [the patentee]'s above-described failings under step two." *Solutran*, 931 F.3d at 1169; *Bozeman Fin. LLC v. Fed. Rsrv. Bank of Atlanta*, 955 F.3d 971, 980 (Fed. Cir. 2020) (finding that claim failed machine-or-transformation test at *Alice* Step Two).

Regardless, the Asserted Claims here do not pass either prong of the machine-or-transformation test. To meet the "machine" prong of the test, "the subject patent must disclose the use of an apparatus *specific to* the claimed invention." *Intell. Ventures I LLC v. Erie Indem.*

InterDigital Exhibit 2006, p. 219
Microsoft v. InterDigital
IPR2024-00306

Co., 711 F. App'x 1012, 1019 (Fed. Cir. 2017) (emphasis in original). But purely generic and conventional tools cannot satisfy that test. *Id.* Here, any claimed "machine" is just generic computer components. Because the claims are not tied to a novel machine or apparatus specific to the claimed invention, they fail the machine prong of the machine-or-transformation test. *Ultramercial, Inc. v. Hulu, LLC*, 772 F.3d 709, 716 (Fed. Cir. 2014) (holding that claim directed to "general purpose computer" failed the "machine" prong as it was not directed to a "novel machine or apparatus"). And the Supreme Court has held that claims reciting generic computer elements to implement abstract ideas, as here, are not patent-eligible. *Alice*, 573 U.S. at 226-27.

To meet the "transformation" prong of the test, a claim must "transform an article into a different state or thing," and the "***transformation must be central to the purpose of the claimed process***." *In re Bilski*, 545 F.3d 943, 962 (Fed. Cir. 2008), *aff'd*, 561 U.S. 593 (2010). Here, the Asserted Claims merely use well-known mathematical protocols as part of the overarching steps of coding and decoding image data. Because the Asserted Claims merely cover generic computer components executing software and/or firmware to perform generic computation functionalities, they cannot pass, and have not passed, the machine-or-transformation test.

For all of the reasons discussed above, the Asserted Claims are directed to an abstract idea, not a specific technological improvement, and fail the analysis at *Alice* Step One and necessitating consideration of *Alice* Step Two.

Under *Alice* Step Two, the additional limitations of the Asserted Claims fail to transform the abstract idea into patentable subject matter. *Alice*, 134 S. Ct. at 2355. For a claim directed at an abstract concept to be nonetheless patent eligible under *Alice* Step Two, "an inventive concept must be evident in the claims," *RecogniCorp*, 855 F.3d at 1327, and it must provide "significantly more" than the abstract idea itself, *BSG*, 899 F.3d at 1289-90. In performing this

analysis, a court must scrutinize the claim elements "both individually and 'as an ordered combination' to determine whether the additional elements 'transform the nature of the claim' into a patent-eligible application." *Enfish*, 822 F.3d at 1334 (quoting *Alice*, 573 U.S. at 217). Elements that are "well-understood, routine, conventional," or "purely functional" cannot confer patent-eligibility. *Alice*, 573 U.S. at 225-26 (citation omitted); *TLI*, 823 F.3d at 611-12. "[I]n determining what is well-known or conventional," "[t]he written description is particularly useful." *Intell. Ventures I*, 838 F.3d at 1317. Here, the Asserted Claims fail *Alice* Step Two.

The Asserted Claims fail to provide significantly more than the abstract concept. To the extent structure is claimed in any of the claims, that structure is nothing more than general purpose computer components performing general purpose computer functions. Such general purpose structure is insufficient to transform the nature of the claims into patent-eligible subject matter. Here, the claims merely recite generic, computer-implemented "units" to perform the abstract idea. This fails, however, to transform an abstract idea into something patentable. *See Alice,* 134 S. Ct. 2357 (transformation into a patent-eligible application "requires more than simply stating the abstract idea while adding the words 'apply it'" (cleaned up) and noting that "[t]he introduction of a computer into the claims does not alter the analysis at *Mayo* step two."); *BSG Tech LLC v. Buyseasons, Inc.*, 899 F.3d 1281, 1291 (Fed. Cir. 2018) ("At *Alice* step two, it is irrelevant whether [the abstract idea] may have been non-routine or unconventional as a factual matter" when the claims fail to provide "significantly more" than the abstract idea itself).

Finally, nothing about the "debocking filter" or "sparse denoising filter" of claim elements "transform[s]" the nature of the claims into a patent-eligible invention. *Alice*, 134 S. Ct. at 2355. The sequence in the claims merely recites the sequence one would expect to occur in a system for coding and transmitting media data, or receiving and decoding media data.

InterDigital Exhibit 2006, p. 221
Microsoft v. InterDigital
IPR2024-00306

Nothing in the order or arrangement of limitations in the claims, therefore, recites any inventive concept. *See Sensormatic Elecs. v. Wyze Labs., Inc.*, No. 2020-2320, at *7 (Fed. Cir. July 14, 2021) (finding ordered combination not inventive because "[p]roviding generic devices that communicate with each other [] is a conventional application of an abstract idea").

Scrutinizing the Asserted Claims' limitations individually or as an ordered combination leads to the same conclusion: they involve well-understood, routine, and conventional activities. Indeed, all of the claimed encoding and decoding steps were well-known before the priority dates of the Asserted Patents. The specification acknowledges that many of the claimed coding and decoding steps were known in the prior art. *See, e.g.*, '556 patent at Figs. 1-2, 1:10-2:55. And the invalidity analysis under 35 U.S.C. §§ 102, 103 set forth, *supra*, in these Invalidity Contentions, including the attached prior art claim charts, demonstrate that the claimed coding and decoding steps involve well-understood, routine, and conventional activities that were well-known before the priority dates of the Asserted Patents.

Therefore, the claimed abstract concept implemented using conventional computer components and conventional technology does not represent an inventive concept at *Alice* Step Two. The Asserted Claims are therefore invalid under 35 U.S.C. § 101.

D. *The '933 and '054 Patents Claim Ineligible Subject Matter*

The Asserted Claims of '933 and '054 patents are invalid under 35 U.S.C. § 101 pursuant to the two-step analysis set forth in *Alice*.

First, InterDigital admits the '054 and '933 patents are drawn to "a device and method for ***wirelessly transferring data*** from a touchscreen device." (emphasis added). Am. Compl. at ¶¶ 101, 114.. The steps recited in claim 1 confirm the claims are drawn to wirelessly transmitting data. The first "processing" step uses a touchscreen to select data. The "detecting" and second

"processing" steps identify a nearby recipient using a wireless data transfer protocol called Bluetooth. The "sending" and "receiving" steps confirm the recipient is ready to receive a data transfer. And the "transferring" step wirelessly transfers the data. In other words, claim 1 covers selecting data to share, selecting a recipient, and sending the data. This is a quintessential ineligible abstract idea**.** The specifications confirm the claims are drawn to nothing more than wirelessly transferring data. In the section entitled "Field of Invention," the patent admits the "application is related to wireless communications." '054 patent at 1:19. And the problem the patents purport to provide is "[a] simplified and more intuitive approach to data transfer between devices . . . ." *Id.* at 1:42-43. The specification characterizes the purported inventions as "[a] method for controlling communications of data in wireless communications . . . " *Id.* at 1:47-48. Even the title of the patents reflects this abstract idea: "Data Transfer Between Wireless Devices." *Id.* at cover. Focusing on the substantive language of the claims, it is clear that they cover nothing more than the abstract idea of wirelessly transferring data.

It is well settled that claims directed to sending and receiving data over a network are not drawn to patent-eligible subject matter. *See buySAFE, Inc. v. Google, Inc.*, 765 F.3d 1350, 1355 (Fed. Cir. 2014) ("That a computer receives and sends the information over a network—with no further specification—is not even arguably inventive."); *see also Elec. Power Grp.*, 830 F.3d at 1354–55 (finding no inventive concept in gathering, sending, and presenting desired interconnected power grid information in real-time). The only difference (though without consequence) between the claims of the data transfer patents in *buySafe* and *Electric Power Group* and the claims of the '054 and '933 patents is the express use of wireless technology.

Adding wireless technology to already unpatentable subject matter does not make the patent valid. The Federal Circuit has repeatedly held that claims directed to transferring data

wirelessly are drawn to patent-ineligible abstract ideas. In *Affinity Labs of Texas, LLC v. Amazon.com Inc.*, the Federal Circuit held claims directed to "wirelessly streaming content to a handheld device" were drawn to the patent-ineligible abstract idea of "delivering user-selected media content to portable devices." 838 F.3d 1266, 1269 (Fed. Cir. 2016). In *Affinity Labs of Texas, LLC v. DIRECTV, LLC*, the Federal Circuit held the asserted patent "claim[ed] the function of wirelessly communicating regional broadcast content to an out-of-region recipient" and therefore, was directed to a patent-ineligible abstract idea. 838 F.3d 1253, 1258 (Fed. Cir. 2016). In *Chamberlain Group. v. Techtronic Industries Co.*, the Federal Circuit held that claims directed to "[w]irelessly communicating status information about a system," and indeed, "the broad concept of communicating information wirelessly, without more, is an abstract idea." 935 F.3d 1341, 1347 (Fed. Cir. 2019). In *Dropbox, Inc. v. Synchronoss Technologies, Inc.*, the Federal Circuit held claims directed to "'transmitting' data, and 'retrieving' data" over a mobile network, i.e., wirelessly, were drawn to patent-ineligible abstract ideas. 815 F. App'x 529, 537 (Fed. Cir. 2020). In *Data Scape Ltd. v. Western Digital Corp.*, the Federal Circuit held a claim for "detecting the connection of one apparatus to another, . . . and transmitting selected data from one apparatus to another" was drawn to patent-ineligible subject matter. 816 F. App'x 461, 464 (Fed. Cir. 2020).

Further, limiting the data transfer to the wireless field or using specific protocols does not make the claims less abstract. "[L]imiting the field of use of the abstract idea to a particular existing technological environment," e.g., wireless, does not "render the claims any less abstract." *Affinity Lab*, 838 F.3d at 1258-59. "Just as performance of an abstract idea on the Internet is abstract, so too the performance of an abstract concept in the environment of the telephone network is abstract." *Intell. Ventures I LLC v. Symantec Corp.*, 838 F.3d 1307, 1320

InterDigital Exhibit 2006, p. 224
Microsoft v. InterDigital
IPR2024-00306

(Fed. Cir. 2016). Limiting the claim to a wireless environment or even to specific protocols like Bluetooth and WiFi, therefore, does not add anything the abstract idea at the heart of the claims to avoid invalidity under Section 101.

The exclusive use of results-based functional language further confirms that the claims are drawn to the same abstract idea of wirelessly transferring data. In *Two-Way Media Ltd. v. Comcast Cable Communications, LLC*, the Federal Circuit held a claimed method "for routing information using result-based functional language" such as "'converting,' 'routing,' 'controlling,' [and] 'monitoring,'" was drawn to patent-ineligible subject matter for failing to "sufficiently describe how to achieve these results in a non-abstract way." 874 F.3d 1329, 1337 (Fed. Cir. 2017); *see also Affinity Labs*, 838 F.3d at 1269 ("The purely functional nature of the claim confirms that it is directed to an abstract idea, not to a concrete embodiment of that idea."); also *Dropbox*, 815 Fed. Appx. at 529 ("'Formatting' data, 'tagging' data, 'transmitting' data, and 'retrieving' data are generalized steps to be performed on a computer using conventional computer activity."). The claims here use the same type of results-based functional language such as "processing," "detecting," "sending," "receiving" and "transferring" that the Federal Circuit has held abstract. '054 patent at cl. 1. The claim language of the '054 patent and '933 patent is even more results-based and functional than other patents this Court previously held invalid under Section 101. *See Ubisoft Ent., S.A. v. Yousician Oy*, 401 F. Supp. 3d 644, 646 (E.D.N.C. 2019) (patent disclosing software for learning to play a musical instrument was ineligible), *aff'd*, 814 F. App'x 588 (Fed. Cir. 2020); *Mankes v. Fandango, LLC*, 238 F. Supp. 3d 751, 754 (E.D.N.C. 2017) (patent directed to methods for a system to control inventory when goods and services are sold both through the Internet and at a physical site was ineligible), *aff'd*, 720 F. App'x 1022 (Fed. Cir. 2018).

InterDigital Exhibit 2006, p. 225
Microsoft v. InterDigital
IPR2024-00306

Therefore, the claimed abstract concept implemented using conventional computer components and conventional technology does not represent an inventive concept at *Alice* Step Two. The Asserted Claims are therefore invalid under 35 U.S.C. § 101.

Under the *Alice* framework, claims drawn to an abstract idea may still be eligible, but only if they recite "an 'inventive concept'—i.e., an element or combination of elements that is sufficient to ensure that the patent in practice amounts to significantly more than a patent upon the ineligible concept itself." *Alice*, 573 U.S. at 217–18 (cleaned up). To evaluate the second step, the Court must "determine whether the claims do significantly more than simply describe the abstract method and thus transform the abstract idea into patentable subject matter." *Int'l Bus. Machines Corp. v. Zillow Grp., Inc.*, 50 F.4th 1371, 1379 (Fed. Cir. 2022) (cleaned up). This must amount to "more than simply stating an abstract idea while adding the words 'apply it.'" *Alice*, 573 U.S. at 221 (quoting *Mayo*, 566 U.S. at 72). Similarly, "limiting the use of an abstract idea 'to a particular technological environment'" does not transform the abstract idea into a patent-eligible subject matter. *Alice*, 573 U.S. at 223 (quoting *Bilski*, 561 U.S. at 610).

The claims of the '054 and '933 patents lack an inventive concept. In *Inventor Holdings, LLC v. Bed Bath & Beyond, Inc.*, 876 F.3d 1372, 1378 (Fed. Cir. 2017), the Federal Circuit held that where "the only components disclosed in the specification for implementing the asserted method claims are unambiguously described as 'conventional.' . . . [t]hese components do not supply an inventive concept." Here, the lack of an "inventive concept" in the '054 and '933 patents is established by the patents' own admissions about the scope and content of the prior art. Because claim 1 is drawn to a method, it does not contain hardware. And the corresponding apparatus claim (claim 23) merely recites generic "circuitry" for performing the same functions as in claim 1. Likewise, the apparatus claim of the '933 patent simply adds a generic

InterDigital Exhibit 2006, p. 226
Microsoft v. InterDigital
IPR2024-00306

"processor" to perform the same functions, which does not make the claim patentable. '933 patent at cl. 23; *Intell. Ventures I LLC*, 838 F.3d at 1320. No elements, or ordered combination of elements, elevates these claims into patent-eligible subject matter under Section 101.

The Specifications Concede All Claimed Elements Are Conventional

The patents admit the hardware, software, application, and user interaction are conventional, commonplace, and known in the art. The specification explains that the claimed "processor" and "circuitry" are "conventional" and used in a conventional way. '054 patent at 10:29-36 ("Suitable processors include, by way of example, . . . a conventional processor, . . . any other type of integrated circuit (IC), and/or a state machine."). The patents also admit that "touch screen and multi-touch technology" predate the patents, pointing to the Apple® iPhone® which launched 2007—about eighteen months before the filing of the earliest provisional application in the '054 and '933 patent family. '054 patent at 1:30-35 ("As the sophistication of user interfaces supporting data transfers has developed (for example, the emergence of touch screen and multi-touch technology) . . . ."). Similarly, the patents admit that at the time of filing, the wireless data transfer functionality central to the claims was "commonplace." *Id.* at 1:22-25 ("In current communications, functionality that allows the transfer of data (such as files or digital media) between devices in both fixed and wireless environments is commonplace."). And the patents admit "protocols such as Bluetooth®" were already "currently available." *Id.* at 5:38-40. The patents next admit the unclaimed application that coordinates the wireless transmission of media items "may be implemented as a plug-in application that may be launched by a user as needed in a manner ***known*** in the art." *Id.* at 3:15-17 (emphasis added). So too are the gestures used to interact with the touchscreen to control the application. *Id.* at 8:35-38 ("The three user

actions 6A, 6B, and 6C, provide inputs to the touchscreen 109, which may be converted to electromechanical signals ***through mechanisms known in the art***." (emphasis added)).

After removing these conventional and "known" elements, what remains in the claims are merely the functional objectives of the claims, e.g., selecting data, selecting a recipient, and wirelessly transferring data. These functional objectives fail to explain *how* the system achieves these results and thus fail to supply the necessary inventive concept. *See Yu v. Apple Inc.*, 1 F.4th 1040, 1043 (Fed. Cir. 2021) ("Given the claim language and the specification, we conclude that claim 1 is 'directed to a result or effect that itself is the abstract idea and merely invoke[s] generic processes and machinery' rather than 'a specific means or method that improves the relevant technology.'" (quoting *Smart Sys. Innovations, LLC v. Chi. Transit Authority*, 873 F.3d 1364, 1371 (Fed. Cir. 2017))). Neither the specification nor the claims describe a new algorithm or methodology for implementing the alleged invention. The claims instead describe the "desired result," but do "not attempt to claim any method for achieving that result" and thus, are not patent eligible. *See Apple, Inc. v. Ameranth, Inc.*, 842 F.3d 1229, 1241, 1244 (Fed. Cir. 2016); *Parker v. Flook*, 437 U.S. 584, 586 (1978) ("The patent application does not purport to explain how to select the appropriate margin of safety, the weighting factor, or any of the other variables.").

The claim elements here, considered individually do not include an "inventive concept" that adds "significantly more" to the patent than the abstract idea itself. *Alice*, 573 U.S. at 217-218. Instead, they are drafted with broad functional language in an attempt to monopolize the function of sending data wirelessly. Relying upon "functional language," without explaining *how* to implement the invention in an unconventional way, fails to confer eligibility under *Alice*, Step Two. *In re TLI Commc'ns LLC Patent Litig.*, 823 F.3d 607, 615 (Fed. Cir. 2016) ("[T]he

specification limits its discussion of these components to abstract functional descriptions devoid of technical explanation as to *how* to implement the invention. . . . Such vague, functional descriptions of server components are insufficient to transform the abstract idea into a patent-eligible invention.") (emphasis added). The Federal Circuit routinely rejects results-focused claims as "do[ing] no more than describ[ing] a desired function or outcome, without providing any limiting detail that confines the claim to a particular solution." *Affinity Labs*, 838 F.3d at 1269 (invalidating claims to a result with "no restriction on how the result is accomplished"); *W. View Research, LLC v. Audi AG*, 685 F. App'x 923, 926 (Fed. Cir. 2017) ("If a patent uses generic computer components to implement an invention, it fails to recite an inventive concept under Alice step two."). Absent a description of a novel improvement to how wireless transmission of data occurs or the physical hardware used to implement the method, nothing else transforms the abstract idea into patentable subject matter. *See In re Killian*, 45 F.4th at 1380.

Further, the claim elements here, considered "as an ordered combination," also lack the "inventive concept" necessary under *Alice*, Step Two. *Alice*, 573 U.S. at 217-218. A claim that recites the "logical sequence of steps" for performing a method does not supply an inventive concept "as an ordered combination." *See Bozeman Fin. LLC v. Fed. Rsrv. Bank of Atlanta*, 955 F.3d 971, 980 (Fed. Cir. 2020) (holding a claim "recit[ing] a logical sequence of steps for receiving and storing information, analyzing that information, and sending a notification upon completion of that analysis" did not supply an inventive concept as an ordered combination); *see also CareDx, Inc. v. Natera, Inc.*, 40 F.4th 1371, 1380 (Fed. Cir. 2022) (holding claims that "merely recite standard, well-known techniques in a logical combination" does not supply an inventive concept); *In re Bd. of Trustees of Leland Stanford Junior Univ.*, 991 F.3d 1245, 1251 (Fed. Cir. 2021) (holding a claim with "recited steps of receiving, extracting, and storing data

amount to well-known, routine, and conventional steps," and therefore did not supply an inventive concept under Section 101). The claims of the '054 and '933 patents recite nothing more than the logical steps for selecting data, selecting a recipient, and transferring the data to the recipient as shown in detail above. The logical and conventional sequence of transferring data reflected in the claims, therefore, cannot supply the missing inventive concept for *Alice*, Step Two. Moreover, the prior art for the '933 and '054 patents discussed above and in the accompanying claim charts further demonstrate that the ordered combination of steps in the '933 and '054 patent claims are not inventive, but instead well known in the prior art.

Therefore, the claimed abstract concept implemented using conventional computer components and conventional technology does not represent an inventive concept at *Alice* Step Two. The dependent claims also lack any inventive concept sufficient to confer subject-matter eligibility under Section 101. As shown in the table below, each dependent claim of the '054 and '933 patents falls into one of six categories. No category reflects an inventive concept sufficient to transform the abstract idea into patent-eligible subject matter.

Category	'054 Patent Claims	'933 Patent Claims
Types of User Inputs	2, 5, 11, 15-19, 22, 24, 27, 33, 37-41, 44,	4, 10, 14-18, 26, 32, 36-40
Displaying Additional Information	3, 20, 21, 25, 42, 43	2,19-22, 24, 41-44
Requiring Specific Wireless Protocols or Modules	7-10, 20, 29-32, 45-49	6-9, 28-31
Requesting and Confirming Transmission Request	6, 12, 28, 34	5, 11, 27, 33
Manipulating data	13, 14, 35, 36	12, 13, 34, 35
Transmitting Certain Data	4, 26	3, 25

The first category of dependent claims covers various types of user inputs. User inputs do not supply an inventive concept. *See In re Villena*, 745 F. App'x 374, 376 (Fed. Cir. 2018) ("Claim 57 recites the basic steps of receiving user input, producing property valuations, and providing display information. This is a classic case of implementing an abstract idea on a

computer, which is not eligible[.]"). Nearly thirty of the dependent claims cover exactly that—conventional methods of interacting with a touch screen. Claim 2 requires the claimed "input" be a "multi-touch input," for claim 5 it is a "tap," for claim 11 it is a "release of a touch," for claim 17 it is a "gesture," for claim 18 it is a "multi-finger input" and other claims cover similar conventional touch-screen inputs. Claims 15 and 16 introduce touching the touchscreen in certain spots (e.g., over icons or applications) in a manner commonplace before these patent applications were filed. The conventional interaction with a touchscreen cannot supply an inventive concept.

The second category of dependent claims covers displaying more transfer information on the screen. The Federal Circuit has held analyzing and displaying data using generic computers does not supply an inventive concept. *Whitserve LLC v. Dropbox, Inc.*, 854 Fed. Appx. 367, 372 (Fed. Cir. Apr. 26, 2021) (holding claims to a system for "requesting, transmitting, receiving, copying, deleting, and storing data records" ineligible under Section 101). Dependent claim 3, for example, requires "displaying, by the WTRU, a progress of the transfer to the selected another WTRU." '054 patent at cl. 3. Claim 20 simply covers transmitting "additional display information" that "is displayed before the selected media is completely transferred." *Id.* at cl. 20. And claim 21 covers the receipt and display of "other media" from "a different WTRU." *Id.* at cl. 21. These claims offer nothing more than the conventional use of a device with a touchscreen.

The third category of dependent claims merely specifies that wirelessly transferring data must use certain conventional standards or generic components. Applying well-known standards in conventional ways does not reflect the required "inventive concept." *Two-Way Media Ltd.*, 874 F.3d at 1338 ("Merely reciting the use of a generic computer or adding the words 'apply it

InterDigital Exhibit 2006, p. 231
Microsoft v. InterDigital
IPR2024-00306

with a computer' cannot convert a patent-ineligible abstract idea into a patent-eligible invention."). Claim 7, for example, requires "the transferring by the WTRU over WiFi uses a WiFi link." '054 patent at cl. 7. Claim 10 requires the detection of nearby recipient to use "a service discovery protocol" that the specification defines as "currently available in protocols such as Bluetooth®." *Id.* at cl 10, 5:38-40. Claims 45, 46, and 47 require the "WiFi link" use "802.21," "peer-to-peer communication" and "WiFi ad-hoc mode," respectively. The patents admit this functionality was already "commonplace" and does not purport to have invented these standards. *Id.* at 1:22-25. The use of these conventional standards in a conventional manner does not reflect an inventive concept.

The fourth category of dependent claims covers routine functions for establishing a connection between devices before transferring data. But confirming a device is ready and able to receive a data transfer is not an inventive concept but are merely steps "performed in a logical order dictated by the abstract idea." *USC IP P'ship, L.P. v. Facebook, Inc.*, 576 F. Supp. 3d 446, 457 (W.D. Tex. 2021), *aff'd sub nom. USC IP P'ship, L.P. v. Meta Platforms, Inc.*, No. 2022-1397, 2023 WL 5606977 (Fed. Cir. Aug. 30, 2023). Claim 6, for example, requires the transferor device to send a request to transfer the data to the transferee. '054 patent at cl. 6. Similarly, claim 12 requires the transferor to "determine" that the transferee is "compatible to receive the selected media," i.e., able to receive the file. *Id.* at cl. 12. Confirming that the receiving device is ready and able to receive the file is not inventive.

The fifth category of dependent claims covers mere data collection and analysis. The Federal Circuit has repeatedly held claims directed to collecting and analyzing data do not reflect an "inventive concept." *See, e.g.*, *Whitserve LLC*, 854 Fed. Appx. at 372. Yet claims 13 and 14 require exactly that. Claim 13 requires the device to "maintain" a "real time map" of nearby

devices but the claims say nothing about its use or display. '054 patent at cl. 13. Claim 14 requires "determining . . . environment information" that lists nearby devices. *Id.* at cl. 14. But again, the claim says nothing about the use or display of the "environment information." Data collection and analysis claims such as these do not supply inventive concepts.

The sixth, and final, category of dependent claims covers the specific type of data to be transferred. Claims 4 and 26 limit the "selected media" to one of three specific types, "photograph, video, or a document." *Id.* at cl. 4, cl. 26. But these are merely field-of-use restrictions because they do not modify the abstract idea but apply the abstract idea to a more limited context. Field-of-use limitations do not supply inventive concepts sufficient to transform claims into patent-eligible subject matter. *Affinity Lab*, 838 F.3d at 1258-59.

None of the six categories of dependent claims reflects an inventive concept sufficient to transform the abstract idea into patent-eligible subject matter. The Asserted Claims are therefore invalid under 35 U.S.C. § 101.

VII. OTHER PRIOR ART

In addition to the prior art references that Lenovo has specifically discussed in these Invalidity Contentions, Lenovo identifies each reference produced and cited in Lenovo document productions, as well as the reference in InterDigital's possession from other litigations and Patent Office proceedings. All of these references are relevant prior art, and Lenovo reserves the right to rely on them based on its continuing research and analysis of the Asserted Claims, accused instrumentalities, and the prior art.

InterDigital Exhibit 2006, p. 233
Microsoft v. InterDigital
IPR2024-00306

VIII. CONCLUSION

These Invalidity Contentions are subject to revision and amendment to the extent appropriate in light of further investigation and discovery, the review and analysis of expert witnesses.

This 18th day of January 2024.

/s/ Jack R. Wilson
Raymond M. Bennett (NC Bar No. 36341)
WOMBLE BOND DICKINSON (US) LLP
555 Fayetteville Street, Suite 1100
Raleigh, NC 27601
Telephone: 919-755-2158
Facsimile: 919-755-6068
Ray.Bennett@wbd-us.com

Jacob S. Wharton (NC Bar No. 37421)
WOMBLE BOND DICKINSON (US) LLP
One West 4th St.
Winston-Salem, NC 27601
Telephone: 919-747-6609
Jacob.Wharton@wbd-us.com

Adam Shartzer
FISH & RICHARDSON P.C.
1000 Maine Ave SW
Washington, D.C. 20024
Telephone: 202-626-6380
shartzer@fr.com
Special Appearance Pursuant to L.R. 83.1

Jack R. Wilson IV
FISH & RICHARDSON P.C.
1000 Maine Ave SW
Washington, D.C. 20024
Telephone: 202-626-6415
jwilson@fr.com
Special Appearance Pursuant to L.R. 83.1 Forthcoming

Attorneys for Defendants

Lenovo Group Limited

InterDigital Exhibit 2006, p. 234
Microsoft v. InterDigital
IPR2024-00306

Lenovo (United States) Inc.
Motorola Mobility LLC

InterDigital Exhibit 2006, p. 235
Microsoft v. InterDigital
IPR2024-00306

APPENDIX 1

Exhibit	Reference
A-01	International Patent Publication No. 2011/128272 ("*Lakshman"*) alone and/or in view of One or More Prior Art References
A-02	U.S. Patent No. 6,510,178 ("Fimoff '178") alone and/or in view of One or More Prior Art References
A-03	U.S. Patent Application Publication No. 2008/0089471 ("Bao") alone and/or in view of One or More Prior Art References
A-04	U.S. Patent No. 8,493,513 ("Sullivan '513") alone and/or in view of One or More Prior Art References
A-05	U.S. Patent No. 6,628,714 ("Fimoff '714") alone and/or in view of One or More Prior Art References
A-06	U.S. Patent App. Publication No. 2008/0232452 ("Sullivan '452") alone and/or in view of One or More Prior Art References

Exhibit	Reference
B-01	U.S Patent Pub. No. 2008/0310507 ("Ye") alone and/or in view of One or More Prior Art References
B-02	U.S. Patent No. 5,880,688 ("Rust") alone and/or in view of One or More Prior Art References
B-03	U.S. Patent No. 5,870,036 ("Franaszek") alone and/or in view of One or More Prior Art References
B-04	U.S. Patent No. 7,777,654 ("Chang") alone and/or in view of One or More Prior Art References
B-05	U.S Patent Pub. No. 2010/0128995 ("Drugeon") alone and/or in view of One or More Prior Art References
B-06	U.S Patent Pub. No. 2007/0030180 ("Yang") alone and/or in view of One or More Prior Art References
B-07	U.S. Patent Publication No. 2008/0240234 ("Hung") alone and/or in view of One or More Prior Art References and One or More Prior Art References
B-08	"Context-based adaptive binary arithmetic coding in the H. 264/AVC video compression standard" ("Marpe") alone and/or in view of One or More Prior Art References
B-09	"Hardware co-processors for real-time and high-quality H. 264/avc video coding" ("Martina") alone and/or in view of One or More Prior Art References and One or More Prior Art References
B-10	U.S. Patent No. 5,045,852 ("Mitchell") alone and/or in view of One or More Prior Art References
B-11	WO 2004/100556 A2 ("Davies") alone and/or in view of One or More Prior Art References
B-12	Overview: VP7 Data Format and Decoder alone and/or in view of One or More Prior Art References

Exhibit	Reference
C-01	U.S. Pat. Pub. No. 2003/0219073 ("Lee") alone and/or in view of One or More Prior Art References
C-02	U.S. Pat. No. 6,360,024 ("Tan") alone and/or in view of One or More Prior Art References
C-03	U.S. Pat. Pub. No. 2006/0008013 ("Pelc") alone and/or in view of One or More Prior Art References
C-04	VC-1 Compressed Video Bitstream Format Decoding Process SMPTE 421M-2006 ("VC1") alone and/or in view of One or More Prior Art References
C-05	U.S. Pat. Pub. No. 2006/0110062 ("Chiang") alone and/or in view of One or More Prior Art References
C-06	ITU-T Rec. H-264 Infrastructure of Audiovisual Services – Coding of Moving Video ("H.264") alone and/or in view of One or More Prior Art References

Exhibit	Reference
D-01	U.S. Patent Publication No. 2009/0298419 A1 ("Ahya") alone and/or in view of One or More Prior Art References
D-02	"Exploring Bluetooth based Mobile Phone Interaction with the Hermes Photo Display" by Keith Cheverst et al. ("Cheverst") alone and/or in view of One or More Prior Art References
D-03	International Publication No. WO 2005/107285 A1 ("Hoddie") alone and/or in view of One or More Prior Art References
D-04	Hewlett Packard Company iPAQ Pocket PC H5555 ("HP H5555") alone and/or in view of One or More Prior Art References
D-05	Sony CLIÉ Personal Entertainment Organizer PEG-UX50/U ("Sony PEG-UX50") alone and/or in view of One or More Prior Art References
D-06	U.S. Patent Publication No. 2007/0191028 A1 ("Hinckley") alone and/or in view of One or More Prior Art References
D-07	U.S. Patent Publication No. 2011/0083111 ("Forutanpour") alone and/or in view of One or More Prior Art References