**IN THE UNITED STATES PATENT AND TRADEMARK OFFICE**

_____

**BEFORE THE PATENT TRIAL AND APPEAL BOARD**

_____

SAMSUNG ELECTRONICS AMERICA, INC.,

SAMSUNG ELECTRONICS CO., LTD.,

Petitioners,

v.

COBBLESTONE WIRELESS, LLC,

Patent Owner.

_____

Case No. IPR2024-00316

U.S. Patent No. 10,368,361

_____

# PETITION FOR *INTER PARTES* REVIEW OF U.S. PATENT NO. 10,368,361

## TABLE OF CONTENTS


I. Introduction ..... 1

II. Standing ..... 2

III. Identification of Challenge And Relief Requested ..... 2

IV. Level Of Ordinary Skill In The Art ..... 3

V. Background ..... 4

A. Frame Structure of Time-Frequency Resources ..... 4

B. Resource Allocation in TDD and Interference Concerns ..... 6

C. Interference Measurements ..... 8

D. Dynamic Frame Configurations and 3GPP's eIMTA Functionality ..... 10

VI. The '361 Patent ..... 12

A. Overview ..... 12

VII. Claim Construction ..... 16

A. "quality status module" ..... 17

B. "sub-optimal" ..... 18

VIII. Grounds of Rejection ..... 19

A. Ground 1: Gaal Renders Obvious the Challenged Claims ..... 19

1. Overview of Gaal ..... 19

2. Claim 10 ..... 21

3. Claim 11: The base station of claim 10, further comprising: a memory coupled to the processor and configured to store an uplink resource pool, a downlink resource pool, and the shared resource pool, wherein the processor is further configured to assign, based on the

determined quality status of the second frequency spectrum resource, the second frequency spectrum resource to one of the uplink resource pool or downlink resource pool. ....46

4. Claim 12: The wireless base station of claim 10, wherein the updated directional allocation of frequency spectrum resources is based on one or more of: current resource requests from a wireless device serviced by the wireless base station, current resource requests from the wireless base station, a number of frequency spectrum resources scheduled from an uplink resource pool for uplink channels, and a number of frequency spectrum resource scheduled from a downlink resource pool for downlink channels. ....48

5. Claim 13: The wireless base station of claim 10, wherein the initial directional allocation of frequency spectrum resources is based on current resource requests from a wireless device serviced by the wireless base station, and current resource requests from the wireless base station. ....49

6. Claim 15: The wireless base station of claim 10, wherein the first frequency spectrum resource includes multiple subcarriers and multiple resource elements associated with each of the multiple subcarriers. ....49

7. Claim 17 ....52

B. Ground 2: Gaal In View of Khoryaev Renders Obvious Claims 10-13, 15, and 17 of the ’361 Patent. ....59

1. Overview of Khoryaev ....60

2. Motivation to Combine ....62

3. Claim 10 ....66

4. Claim 17 ....71

5. Remaining Limitations of Claims 10, 11-13, 15, and 17 ....71

IX. Discretionary Denial ....72

A. *Fintiv* ..... 72

B. 35 U.S.C. §325(d) ..... 73

X. Mandatory Notices And Fees ..... 73

A. Real Party-In-Interest ..... 73

B. Related Matters ..... 73

C. Counsel and Service Information ..... 74

D. Payment of Fees ..... 75

XI. Conclusion ..... 75

**EXHIBIT LIST**

| Ex. | Description |
|---|---|
| 1001 | U.S. Patent No. 10,368,361 B2 ("the '361 Patent") |
| 1002 | Prosecution History of U.S. Patent No. 10,368,361 B2 |
| 1003 | Declaration of Mr. Proctor |
| 1004 | U.S. Patent Application Publication No. 2014/0341051 A1 ("Gaal") |
| 1005 | LTE-Advanced: A Practical Systems Approach to Understanding 3GPP LTE Releases 10 and 11 Radio Access technologies by Ahmadi ("Ahmadi") |
| 1006 | R1-142771, CR 0191 to TS 36.211, Inclusion of eIMTA, TDD-FDD CA, and coverage enhancements, 3GPP TSG-RAN WG1 Meeting #77, Ericsson (May 19-23, 2013) ("R1-142771") |
| 1007 | R1-142772, CR 0158 to TS 36.212, Introduction of Rel 12 features of TDD-FDD CA and eIMTA, 3GPP TSG-RAN WG1 Meeting #77, Huawei (May 19-23, 2014) ("R1-142772") |
| 1008 | 3GPP TS 36.211 V12.2.0 |
| 1009 | 3GPP TS 36.213 V12.2.0 |
| 1010 | Cobblestone Wireless, LLC v. T-Mobile USA, Inc., No. 2:22-cv-00447-JRG-RSP, Dkt. 62 (E.D. Tex. Apr. 8, 2023) ("Docket Control Order") |
| 1011 | R1-132137, Signalling for flexible subframes and determination of their usage, 3GPP TSG-RAN WG1 Meeting #73, Panasonic (May 20-24, 2013) ("R1-132137") |
| 1012 | Sesia, S. et al., *LTE—The UMTS Long Term Evolution*, 2d ed. (2011) |
| 1013 | Kreher, R. & Gaenger, K., *LTE Signaling, Troubleshooting and Optimization*, 1st ed. (2011) |
| 1014 | 3GPP TS 36.214 V11.1.0 |

| | |
|---|---|
| 1015 | IBM International Technical Support Organization, *An Introduction to Wireless Communications*, 2d ed. (October 1995) |
| 1016 | Taylor, M.S. et al., *Internet Mobility: The CDPD Approach* (June 11, 1996) |
| 1017 | Steele et al., *GSM, cdmaOne and 3G Systems* (2001) |
| 1018 | United States Patent No. 9,185,620 ("Khoryaev") |
| 1019 | Katherine K. Vidal, *Interim Procedure for Discretionary Denials in AIA Post-Grant Proceedings with Parallel District Court Litigation* (June 21, 2022) |
| 1020 | *Cobblestone Wireless, LLC v. Samsung Electronics Co., Ltd.,* No. 2:22-cv-00285-JRG-RSP, Dkt. 29-1, Docket Control Order |

## LIST OF CHALLENGED CLAIMS

| Claim | Limitation |
|---|---|
| [10.pre] | A wireless base station for a wireless communication network, the wireless base station comprising: |
| [10.1] | a quality status module configured to determine a respective quality status of a first frequency spectrum resource and a second frequency spectrum resource, wherein each of the first frequency spectrum resource and the second frequency spectrum resource are associated with an air interface that is available for use by the wireless base station for an uplink channel or a downlink channel; |
| [10.2] | a processor coupled to the quality status module and configured to: |
| [10.3] | determine, based on the quality status of the first frequency spectrum resource, that the first frequency spectrum resource is a sub-optimal resource, for the uplink channel and the downlink channel, relative to other frequency spectrum resources that are available for use by the wireless base station; and |
| [10.4] | in response to the determination that the first frequency spectrum resource is the sub-optimal resource, assign the first frequency spectrum resource to a shared resource pool; and |
| [10.5] | a scheduler module coupled to the processor and configured to: |
| [10.6] | schedule the second frequency spectrum resource for the uplink channel or the downlink channel based on an initial directional allocation of frequency spectrum resources for the wireless base station; |
| [10.7] | determine an updated directional allocation of frequency spectrum resource for the wireless base station after the second frequency spectrum resource is scheduled for the uplink channel or the downlink channel; and |

| Claim | Limitation |
|---|---|
| [10.8] | schedule the first frequency spectrum resource based on the updated directional allocation of frequency spectrum resources for the wireless base station. |
| | |
| 11 | The base station of claim 10, further comprising: a memory coupled to the processor and configured to store an uplink resource pool, a downlink resource pool, and the shared resource pool, wherein the processor is further configured to assign, based on the determined quality status of the second frequency spectrum resource, the second frequency spectrum resource to one of the uplink resource pool or downlink resource pool. |
| | |
| 12 | The wireless base station of claim 10, wherein the updated directional allocation of frequency spectrum resources is based on one or more of: current resource requests from a wireless device serviced by the wireless base station, current resource requests from the wireless base station, a number of frequency spectrum resources scheduled from an uplink resource pool for uplink channels, and a number of frequency spectrum resource scheduled from a downlink resource pool for downlink channels. |
| | |
| 13 | The wireless base station of claim 10, wherein the initial directional allocation of frequency spectrum resources is based on current resource requests from a wireless device serviced by the wireless base station, and current resource requests from the wireless base station. |
| | |
| 15 | The wireless base station of claim 10, wherein the first frequency spectrum resource includes multiple subcarriers and multiple resource elements associated with each of the multiple subcarriers. |

| Claim | Limitation |
|---|---|
| | |
| [17.pre] | A non-transitory computer-readable medium that includes computer-executable instructions stored thereon, which in response to execution by a processor, cause the processor to perform or control performance of operations that comprise: |
| [17.1] | determine a quality status of a first frequency spectrum resource that is available for use by a base station for an uplink channel or a downlink channel; |
| [17.2] | determine, based on the quality status, that the first frequency spectrum resource is a sub-optimal resource, for the uplink channel and the downlink channel, relative to other frequency spectrum resources that are available for use by the base station, |
| [17.3] | wherein to determine that the first frequency spectrum resource is the sub-optimal resource, the computer-executable instructions, in response to execution by the processor, cause the processor to perform or control performance of at least one operation that comprises: determine that a channel quality indicator (CQI) of the first frequency spectrum resource is less than a respective CQI of one or more other frequency spectrum resources that are available for use by the base station; and determine that a received interference power (RIP) of the first frequency spectrum resources is greater than a respective RIP of the one or more other frequency spectrum resources that are available for use by the base station; |
| [17.4] | in response to the determination that the first frequency spectrum resource is the sub-optimal resource, assign the first frequency spectrum resource to a shared resource pool; |
| [17.5] | schedule, based on an initial directional allocation of communication resources for the base station, a second frequency spectrum resource that is available for use by the base station for the uplink channel or the downlink channel; |

| Claim | Limitation |
|---|---|
| [17.6] | after the second frequency spectrum resource is scheduled for use by the base station, determine an updated directional allocation of communication resources for the base station; and |
| [17.7] | select the first frequency spectrum resource from the shared resource pool, and schedule the first frequency spectrum resource for either the uplink channel or the downlink channel based on the determined updated directional allocation of communication resources for the base station. |

# I. INTRODUCTION

Samsung Electronics America, Inc. and Samsung Electronics Co., Ltd. ("Petitioners") respectfully requests *inter partes review* of claims 10-13, 15, and 17 (the "Challenged Claims") of U.S. Patent No. 10,368,361 (the "'361 Patent") pursuant to 35 U.S.C. §311 and 37 C.F.R. §42.100. Petitioners note that the grounds of challenge in this Petition are a "copycat" of the Petition filed in *T-Mobile USA, Inc. et al. v. Cobblestone Wireless, LLC*, IPR2024-00138. Both Petitions challenge the same claims using the same prior art and for the same reasons. The expert declaration filed in this proceeding is substantively identical to the expert declaration in IPR2024-00138 and signed by the same expert, and both Petitions otherwise cite to the same exhibits. If IPR2024-00138 is instituted, Petitioners intend to move for joinder.

The '361 Patent modifies the TDD resource allocation scheme used in LTE. The '361 Patent acknowledges that the prior art TDD resource allocation scheme assigned frequency resources to either uplink or downlink communications. To improve the flexibility, the '361 Patent discloses the concept of a shared resource pool, which includes frequency resources that can be used for uplink or downlink.

However, the 3GPP standards body (the industry group responsible for developing cellular standards) was already discussing proposed improvements to the TDD allocation schemes. Specifically, prior to the '361 Patent, one of the

suggested changes was to modify the TDD resource allocation scheme to use "flexible" or "dynamic" subframes to account for changing traffic needs in the network. These flexible or dynamic subframes allowed the network to adapt to changing traffic patterns and improved prior art systems where the TDD subframe direction was fixed. These proposed changes were part of a feature referred to as an Enhanced Interference Mitigation & Traffic Adaptation (eIMTA), which is the subject of the prior art references Gaal and Khoryaev.

Like the claims of the '361 Patent, Gaal and Khoryaev identify that flexible subframes are subject to interference and propose a strategy to schedule flexible subframes to account for traffic needs (e.g., heavy downlink traffic) in the network.

Gaal renders obvious the claims of the '361 Patent because it discloses the same solution (flexible or shared resources) for a TDD allocation scheme in LTE. Alternatively, Gaal in combination with Khoryaev discloses the same.

## II. STANDING

Petitioners certify that the '361 Patent is available for IPR and that Petitioners are not barred or estopped from presenting the grounds identified in this Petition.

## III. IDENTIFICATION OF CHALLENGE AND RELIEF REQUESTED

Petitioners request cancellation of claims 10-13, 15 and 17 ("Challenged Claims") on the following grounds:

| Ground | Reference(s) | Basis | Claims |
|---|---|---|---|

| | | | |
|---|---|---|---|
| 1 | Gaal | §103 | 10-13, 15, 17 |
| 2 | Gaal, Khoryaev | §103 | 10-13, 15, 17 |

As stated on the face of the patent, the earliest priority date of the ’361 Patent is August 1, 2014. The relied upon reference is prior art to this patent for the reasons stated below.

**Gaal (Ex. 1004)**: U.S. Patent Application Publication No. 2014/0341051A1 to Gaal (“Gaal”) is titled “Channel State Information (CSI) Measurement and Reporting for Enhanced Interference Management for Traffic Adaptation (EIMTA) in LTE.” Gaal was published on November 20, 2014, based on an application filed on May 13, 2014. Ex. 1004, Cover. Gaal is therefore prior art under at least 35 U.S.C. § 102(a) (AIA).

**Khoryaev (Ex. 1018)**: U.S. Pat. No. 9,185,620 to Khoryaev (“Khoryaev”) is titled “Adaptive UL-DL Configurations in a TDD Heterogeneous Network.” Khoryaev was published Nov. 10, 2015, based on an application filed on Nov. 29, 2012. Ex. 1018, Cover. Khoryaev is therefore prior art under at least 35 U.S.C. § 102(a) (AIA).

## IV. LEVEL OF ORDINARY SKILL IN THE ART

A POSITA at the time of the alleged invention of the ’361 Patent would have had at least a bachelor’s degree in electrical engineering, computer engineering, computer science, physics, or the equivalent, and at least two years of experience

working in the field. Ex. 1003, ¶42. Relevant working experience would include experience with telecommunications and networking, radio-access networking, and/or service provisioning in wireless networks. *Id*. More education can supplement practical experience and vice versa. *Id*.

## V. BACKGROUND

### A. Frame Structure of Time-Frequency Resources

A wireless network includes base stations (BS) that communicate with user equipment (UE). Ex. 1003, ¶53. A downlink transmission is a transmission from the BS to the UE, and an uplink transmission is a transmission from the UE to the BS.

The LTE standard is a 4th Generation (4G) wireless standard. In LTE, the resources used to communicate are time-frequency resources. In LTE, these time-frequency resources are organized into radio frames. The structure of an LTE radio frame is below. Ex. 1005 at 445; Ex. 1003, ¶57.

**Ex. 1005, Fig. 9.31 (annotated); Ex. 1003, ¶57.**

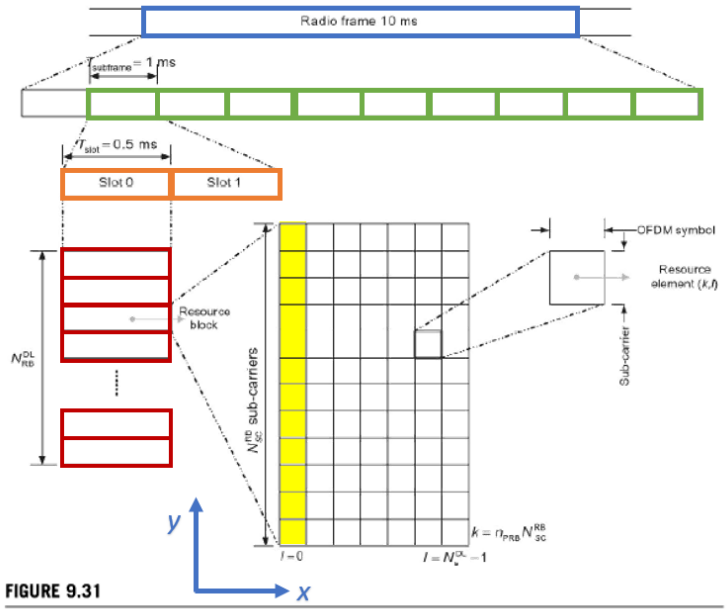


**FIGURE 9.31**
Resource block structure in time and frequency dimensions [3,162].

The radio frame (outlined above in blue) is a 10ms time-frequency resource. The time domain is represented in the *x*-direction, and the frequency domain is represented in the *y*-direction. Ex. 1003, ¶¶58-59. The radio frame can be divided into ten 1 ms subframes (outlined in green). *Id.*, ¶60. Each subframe is divided into 0.5 ms slots (outlined in orange). *Id.*, ¶61. For each slot, there are *n* resource blocks (RB) (outlined in dark red), which are the smallest units of resources that can be allocated to a user. *Id.*, ¶62. A resource block may be, for example, 180 kHz wide in frequency and 1 slot long in time. *Id.* In frequency, resource blocks are further divided into subcarriers (shown in yellow highlighting). *Id.*, ¶63.

By defining radio frames to have these smaller units of time-frequency resources, LTE provides multiple ways of controlling how communications between BS and UE occur.

### B. Resource Allocation in TDD and Interference Concerns

The time-frequency resources described above can be allocated to users using resource allocation schemes known in the art. Ex. 1003, ¶64. Time Division Duplex (TDD) was one well-known resource allocation scheme that was used in LTE. *Id.*

TDD separates uplink and downlink transmissions in the time domain but uses the same frequency range. *Id.*, ¶66. The annotated figure below illustrates an example of a TDD resource allocation scheme. The subframes in yellow could be allocated to uplink transmissions while the subframes in blue could be allocated to downlink transmissions. *Id.*, ¶70.

**Ex. 1005, Fig. 9.31 (annotated) (partial); Ex. 1003, ¶70.**

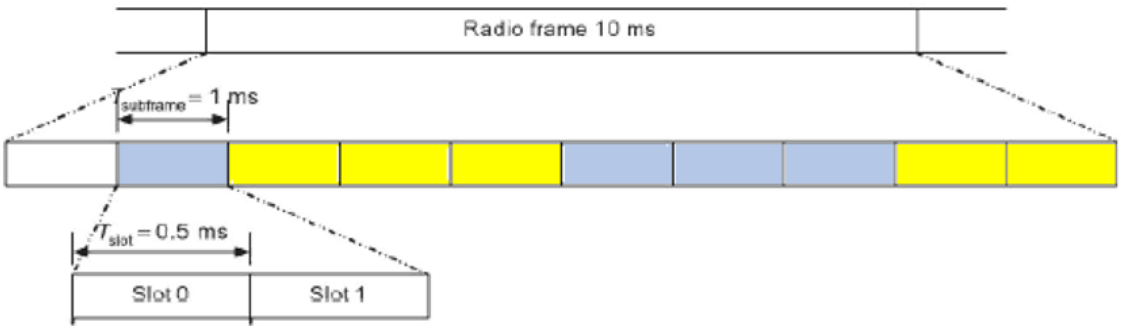


Prior to the ’361 Patent, the LTE standard defined seven possible uplink-downlink (UL-DL) subframe configurations for TDD. In the table below, the “D” is

downlink, the "U" is uplink, and the "S" is special, which is a frame that can be (but does not have to be) divided by slot between uplink and downlink. *Id.*, ¶71.

**Ex. 1008 at 12.**

**Table 4.2-2: Uplink-downlink configurations**

| Uplink-downlink configuration | Downlink-to-Uplink Switch-point periodicity | Subframe number | | | | | | | | | |
|---|---|---|---|---|---|---|---|---|---|---|---|
| | | 0 | 1 | 2 | 3 | 4 | 5 | 6 | 7 | 8 | 9 |
| 0 | 5 ms | D | S | U | U | U | D | S | U | U | U |
| 1 | 5 ms | D | S | U | U | D | D | S | U | U | D |
| 2 | 5 ms | D | S | U | D | D | D | S | U | D | D |
| 3 | 10 ms | D | S | U | U | U | D | D | D | D | D |
| 4 | 10 ms | D | S | U | U | D | D | D | D | D | D |
| 5 | 10 ms | D | S | U | D | D | D | D | D | D | D |
| 6 | 5 ms | D | S | U | U | U | D | S | U | U | D |

A known problem prior to the '361 Patent for TDD resource allocation schemes was the possibility of inter-cell and intra-cell interference. Ex. 1003, ¶72. Interference may occur due to collisions between uplink and downlink transmissions on the same frequency, or interference may occur between neighboring cells using the same frequency for transmissions. *Id.*, ¶73.

For example, in the figure below, Petitioner's expert shows how a BS on the left operating in configuration 0 and a BS on the right operating in configuration 1 would create interference in subframes (SF) numbered SF4 and SF9 for a UE that was camped between them. *Id.*, ¶78. In particular, SF4 and SF9 for the BS on the left are configured for uplink transmissions, but SF4 and SF9 for the BS on the right are configured for downlink transmission. *Id.* The simultaneous uplink and downlink transmissions would cause interference in SF4 and SF9 for a UE camped between these two BSs. *Id.*

**Ex. 1003, ¶78**

| Uplink-downlink configuration | Downlink-to-Uplink Switch-point periodicity | Subframe number | | | | | | | | | |
|---|---|---|---|---|---|---|---|---|---|---|---|
| | | 0 | 1 | 2 | 3 | 4 | 5 | 6 | 7 | 8 | 9 |
| 0 | 5 ms | D | S | U | U | U | D | S | U | U | U |
| 1 | 5 ms | D | S | U | U | D | D | S | U | U | D |

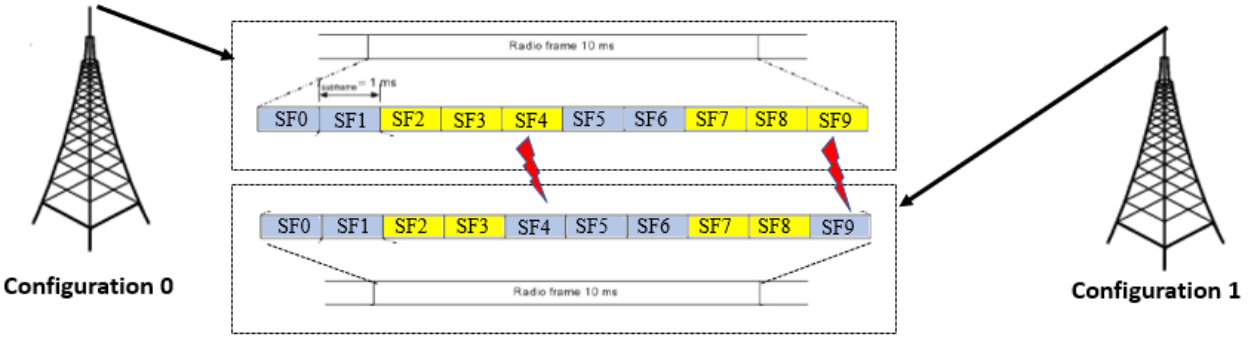


For this reason, a POSITA would have known that network operators generally used the same TDD configuration for adjacent BSs to avoid inter-cell uplink/downlink interference. *Id.*, ¶76.

### C. Interference Measurements

Prior to the ’361 Patent, a POSITA would have been aware of techniques to measure inter-cell or other cell interference. Ex. 1003, ¶79. One such technique uses channel state information (CSI) reference signals (CSI-RS). *Id.*, ¶80. CSI-RS are known reference signals sent by the BS that the UE measures to assess the state of the channel. *Id.* The UE sends CSI information in measurement reports back to the BS, which can adjust its signal accordingly. *Id.*, ¶81.

One CSI metric that is fed back to the BS is called channel quality indicator (CQI). Ex. 1009 at 58; Ex. 1005 at 664; Ex. 1003, ¶¶81-83. The CQI is a simplified

quantization of the measure of signal-to-interference-plus-noise ratio (SINR), which is a measurement that will be lower in the presence of interference. Ex. 1003, ¶83.

The possible CQI values were defined by the LTE standard, with each value representing a different signal quality for supporting certain modulation and coding schemes which result in higher or lower efficiency of each measured subframe. Ex. 1009; Ex. 1003, ¶84. The following image is a table with the CQI index setting forth the values:

**Ex. 1009, Table 7.2.3-1**

**Table 7.2.3-1: 4-bit CQI Table**

| CQI index | modulation | code rate x 1024 | efficiency |
|---|---|---|---|
| 0 | out of range | | |
| 1 | QPSK | 78 | 0.1523 |
| 2 | QPSK | 120 | 0.2344 |
| 3 | QPSK | 193 | 0.3770 |
| 4 | QPSK | 308 | 0.6016 |
| 5 | QPSK | 449 | 0.8770 |
| 6 | QPSK | 602 | 1.1758 |
| 7 | 16QAM | 378 | 1.4766 |
| 8 | 16QAM | 490 | 1.9141 |
| 9 | 16QAM | 616 | 2.4063 |
| 10 | 64QAM | 466 | 2.7305 |
| 11 | 64QAM | 567 | 3.3223 |
| 12 | 64QAM | 666 | 3.9023 |
| 13 | 64QAM | 772 | 4.5234 |
| 14 | 64QAM | 873 | 5.1152 |
| 15 | 64QAM | 948 | 5.5547 |

A POSITA would have known that CSI reports include CQI. Ex. 1003, ¶81. For example, the prior art standards explicitly state that CSI "consists of 'Channel Quality Indicator (CQI), precoding matrix (PMI), precoding type indicator (PTI), and/or rank indication (RI).'" Ex. 1009 at 58; Ex. 1003, ¶81; *see also* Ex. 1009 at 69

("A UE is semi-statically configured by higher layers to periodically feed back different CSI components (CQI, PMI, PTI, and/or RI)[.]").

Indeed, CQI as a component of CSI feedback is a textbook principle that pre-dates the '361 Patent. *See, e.g.*, Ex. 1012 at 352 (explaining CSI as "includ[ing] Channel Quality Indicators (CQIs) as well as the MIMO-related feedback consisting of RIs and PMIs."). Ex. 1003, ¶82.

### D. Dynamic Frame Configurations and 3GPP's eIMTA Functionality

Prior to the '361 Patent, the 3GPP standards body discussed how resource allocation schemes could be designed to efficiently allocate resources under changing traffic conditions. Ex. 1003, ¶87.

Of relevance to the discussion of Gaal and Khoryaev below, the concept of "dynamic" or "flexible" subframes had been introduced. When using dynamic/flexible subframes, the network could change the uplink/downlink direction of certain subframes for short bursts to account for interference or traffic demand. Ex. 1003, ¶88; Ex. 1004, ¶¶[0069], [0075]. Table 5 below is from a contribution proposed by Panasonic to the standards body developing LTE:

**Ex. 1011 at 3.**

**Table 5: Additional Flexible Uplink-downlink configurations.**

| Uplink-downlink configuration | Subframe number | | | | | | | | | |
|---|---|---|---|---|---|---|---|---|---|---|
| | 0 | 1 | 2 | 3 | 4 | 5 | 6 | 7 | 8 | 9 |
| F0 | D | S | U | F | F | D | S | U | F | F |
| F1 | D | S | U | F | D | D | S | U | F | D |
| F2 | D | S | U | D | D | D | S | F | D | D |
| F3 | D | S | U | F | F | D | D | D | D | D |
| F4 | D | S | U | F | D | D | D | D | D | D |
| F5 | D | S | U | D | D | D | D | D | D | D |
| F6 | D | S | U | F | F | D | S | U | F | D |

This table mirrors the TDD configurations table shown in Section VII.C with one change. In this table, a subset of the subframes were designated with an "F" to indicate that those subframes were "flexible" or "dynamic." Ex. 1003, ¶90. Accordingly, the above TDD configurations could allow "flexibility for the adaptation of the traffic." Ex. 1011 at 3; Ex. 1003, ¶90.

As part of this discussion on "dynamic" subframes, the eIMTA feature was proposed as a strategy to mitigate scheduling interference that would arise from dynamic subframes. Ex. 1010 at 87; Ex. 1006; Ex. 1007; Ex. 1003, ¶91. eIMTA allows dynamic reconfiguration of UL-DL time slots based on interference mitigation and traffic adaptation considerations. Ex. 1003, ¶91.

It was also known that interference considerations could be used to determine whether to configure and use a flexible subframe or a regular/fixed subframe. Ex. 1003, ¶¶130-32. In particular, prior art references taught first determining whether particular subframes will be affected by interference and then adapting the

subframes to be fixed or flexible to mitigate this interference. *Id.* For example, Khoryaev discloses that UL-DL interference can occur between cells and teaches adaptive, synchronized UL-DL configurations in the cells to resolve or mitigate interference. Ex. 1018, 5:16-43. One example disclosed in Khoryaev is reducing the set of possible UL-DL configurations available for a first cell based on the UL-DL configuration of a neighboring cell that may interfere with the first cell. Ex. 1018, Fig. 7, 9:30-33.

Thus, prior to the ’361 Patent, the allocation and scheduling of frequency spectrum resources for uplink and downlink transmission based on channel condition and traffic needs—the subject of the challenged claims—was known.

## VI. THE ’361 PATENT

### A. Overview

The ’361 Patent is titled “Adaptive Communication Resource Allocation in a Wireless Network” and describes TDD resource allocation schemes. Figure 2B illustrates frequency spectrum resource allocation employing TDD. Ex. 1003, ¶94; Ex. 1001, 5:11-14.

**Ex. 1001, Fig. 2B (annotated); Ex. 1003, ¶94**

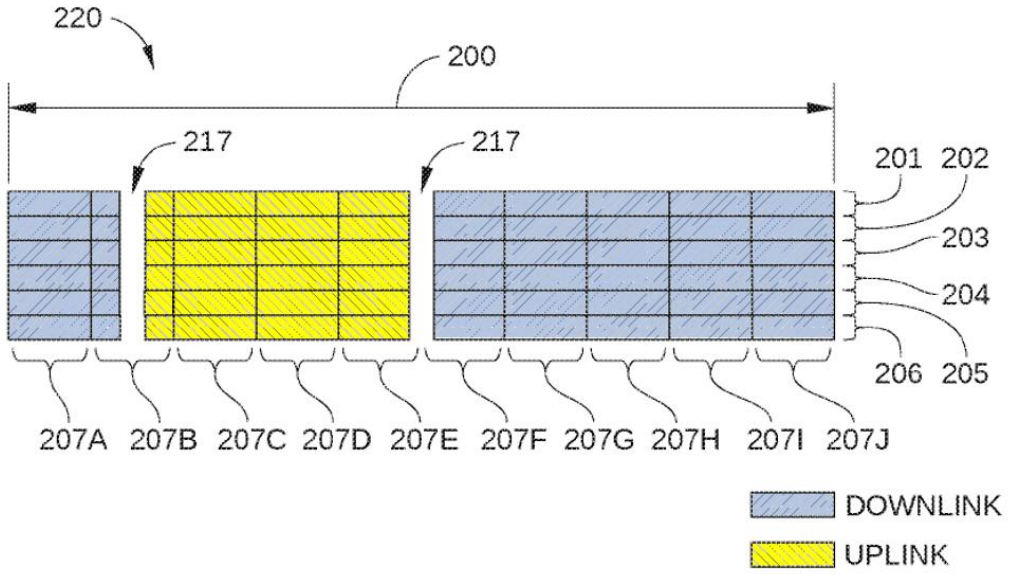


The ’361 Patent purports to address a challenge of “efficient use of available wireless communication spectrum.” Ex. 1001, 1:19-24, 32-34; Ex. 1003, ¶96. In particular, the ’361 Patent acknowledges existing “communication scheme[] commonly used” TDD, but TDD “may typically be unable to employ all available frequency spectrum resources when uplink and downlink traffic is constantly changing.” Ex. 1001, 3:23-38; Ex. 1003, ¶96. The ’361 Patent notes the limited number of options for TDD (seven configurations) and attempts a different solution. Ex. 1003, ¶96.

The ’361 Patent discloses a specific process illustrated in part by Figure 4:

**Ex. 1001, FIG. 4 (annotated); Ex. 1003, ¶97**

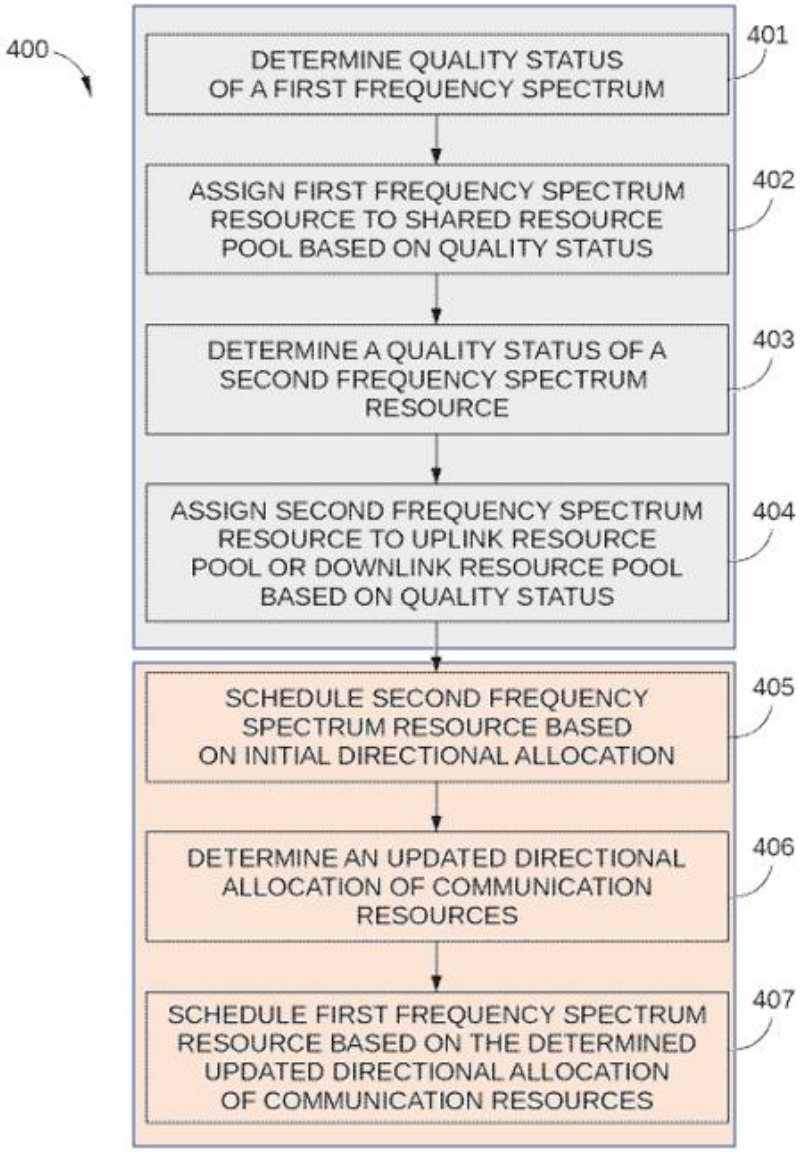


FIG. 4

The process occurs in two phases. In phase one (shaded in grey), the resources are measured and assigned based on their quality. Ex. 1003, ¶97. In phase two, the resources are scheduled based on "allocation determinations" (*e.g.*, traffic needs) in the network. *Id.*

As described by the ’361 Patent, in phase one *in steps 401 & 403*, the method “obtain[s] the quality status of the current uplink and downlink frequency spectrum resources available (e.g., subcarriers 201-206) using quality status module 113.” Ex. 1001, 8:50-53; Ex. 1003, ¶100. To obtain the quality of the signal, the ’361 Patent discloses “*using information typically already measured by LTE and LTE-Advanced wireless communication systems*.” Ex. 1001, 8:53-64; 8:64-9:2 (emphasis added).

*In steps 402 and 404*, the process uses “the quality status measured” to assign the resources into “pools.” Ex. 1001, 9:3-5, 10:8-28; Ex. 1003, ¶101. The first pool (identified in step 402) is called the “shared resource pool,” which is where the first frequency resource is assigned. Ex. 1001, 11:28-32; Ex. 1003, ¶101. This shared pool contains resources that are measured to be “sub-optimal” for both downlink and uplink (but depending on traffic needs, is available to be assigned to either downlink or uplink). Ex. 1001, 11:28-32; Ex. 1003, ¶101. The second and third pools (identified in step 404) are called the “downlink resource pool” and the “uplink resource pool.” These pools are assigned to resources that are determined to be most suitable for either the downlink (*e.g.*, “high CQI”) or uplink (*e.g.*, “low RIP”). Ex. 1001, 9:9-13.

In phase two *in step 405*, a scheduler performs an initial allocation and schedules the resources. Ex. 1001, 9:30-40; Ex. 1003, ¶102. The scheduler schedules

the downlink resources from the downlink resource pool and the uplink resources from the uplink pool. Ex. 1001, 9:30-34; Ex. 1003, ¶102.

*In step 406*, the scheduler performs an "updated directional allocation of frequency spectrum resources" based on the number of current resources requests, the current scheduling of uplink channels and downlink channels, and remaining resources not yet scheduled. Ex. 1001, 9:47-63; Ex. 1003, ¶103.

*In step 407*, the remaining resource requests are assigned from the shared resource pool in either the uplink or downlink direction, depending on what kind of resource is needed. Ex. 1001, 12:55-62. "Consequently, frequency spectrum resources may be dynamically allocated to satisfy resource requests for node 110, so that very few or no frequency spectrum resources are idle." Ex. 1001, 10:1-6; Ex. 1003, ¶104.

And while the '361 Patent describes some embodiments with "frequency spectrum resources" as subcarriers, the '361 Patent also makes clear that "each individual [physical resource block] PRB" may constitute a frequency resource. Ex. 1001, 10:29-38; Ex. 1003, ¶105.

## VII. CLAIM CONSTRUCTION

Claims are "construed using the same claim construction standard that would be used to construe the claim in a civil action under 35 U.S.C. 282(b)." 37 C.F.R. § 42.100(b). When a trial is instituted, claim terms must be given their plain ordinary

and customary meaning as understood by a POSITA during the relevant timeframe considering the specification and the prosecution history. *Id.; Phillips v. AWH Corp.*, 415 F.3d 1303, 1312-13 (Fed. Cir. 2015) (en banc); *see* 83 Fed. Reg. 51340.

### A. "quality status module"

Claim 10 of the 361 Patent includes the following term: "***a quality status module*** configured to determine a respective quality status of a first frequency spectrum resource and a second frequency spectrum resource."

To the extent this term is in controversy and needs to be explicitly construed, "quality status module" should be construed as a means-plus-function (MPF) term. "Module" is a nonce word that can operate as a substitute for "means" in the context of § 112 (f). *Williamson v. Citrix Online, LLC*, 792 F.3d 1339, 1350 (Fed. Cir. 2015). Here, the prefix "quality status" does not impart structure into the term "module" and does not describe a sufficiently definite structure. For example, the "quality status module 113" is described as nothing more than "suitably configured software, firmware, or logic circuit entity, etc." Ex. 1001, 10:56-58; Ex. 1003, ¶108.

The function of the quality status module is to "to determine a respective quality status of a first frequency spectrum resource and a second frequency spectrum resource" as stated in the claim. Ex. 1003, ¶109. The structure disclosed in the specification is a general-purpose processor. Ex. 1001, 10:56-58; Ex. 1003, ¶109. The algorithm executed by the processor to determine the quality status is to measure

the "channel quality indicator (CQI), received interference power (RIP), and/or any other suitable quality metric or key performance indicator, such as RSSI, acknowledgement/negative acknowledgement (ACK/NACK) frequency, dropping rate, block error rate, bit error rate, signal-to-interference-plus-noise ratio (SINR), etc." Ex. 1001, 4:28-34; Ex. 1003, ¶109.

The prior art discussed below renders obvious the quality status module regardless of whether the term is construed as an MPF limitation.

**B. "sub-optimal"**

Claims 10 and 17 require "determin[ing] based on the quality status of the first frequency spectrum resource, that the first frequency spectrum resource is a ***sub-optimal*** resource." Ex. 1001, cl. 10, 17.

"Sub-optimal" is a term of degree. The only example of how to determine whether a resource is sub-optimal described in the '361 Patent is the "suitability" based on "RIP and CQI values." Ex. 1001, 9:21-29. The '361 Patent then implies that resources that are not "high CQI" or "low RIP" are sub-optimal. Ex. 1001, 9:21-29.

Petitioners do not take a position as to the definiteness of the full scope of this limitation because it is unnecessary for the Board to determine whether the full scope of the claims are definite as, for the reasons stated below, the prior art discloses an example consistent with how the '361 Patent describes "sub-optimal." *See, e.g.*,

*Mylan Pharms. Inc. v. Horizon Pharma USA*, IPR2017-01995, Paper 72 at 5-6 (Mar. 28, 2019) ("[W]e need not necessarily determine the outer boundaries of a claim in reaching a conclusion as to whether the asserted prior art anticipates a claim or renders it obvious.").

## VIII. GROUNDS OF REJECTION

### A. Ground 1: Gaal Renders Obvious the Challenged Claims

Gaal discloses improvements to known TDD resource allocation schemes. Like the '361 Patent, Gaal proposes measuring the resources using known measurement techniques and then assigning "flexible" or "dynamic" subframes to uplink or downlink based on the measurements and traffic needs.

#### 1. Overview of Gaal

Gaal "generally relate[s] to wireless communications and, more particularly, to techniques for channel state information (CSI) measurement and reporting for enhanced interference management for traffic adaptation (eIMTA) in long term evolution (LTE)." Ex. 1004, *Abs.*, ¶[0003]. Specifically, Gaal discloses a method that "identif[ies], within a set of subframes, one or more flexible subframes that may be dynamically managed for either uplink or downlink communications." Ex. 1004, Abs.; *see also* ¶[0009].

Gaal discloses, in an exemplary LTE/LTE-A system, a TDD mode where the transmissions travel in both the downlink and uplink direction on the same frequency band. Ex. 1004, ¶¶ [0069], [0033]-[0034]; Ex. 1003, ¶¶116-17. Gaal also discloses,

like the ’361 Patent, that TDD supports seven possible downlink and uplink subframe configurations, which are illustrated in Figure 6 below.

**Ex. 1004, Fig. 6**

**Uplink-downlink configurations**

| Uplink-downlink configuration | Downlink-to-Uplink Switch-point periodicity | Subframe number | | | | | | | | | |
|---|---|---|---|---|---|---|---|---|---|---|---|
| | | 0 | 1 | 2 | 3 | 4 | 5 | 6 | 7 | 8 | 9 |
| 0 | 5 ms | D | S | U | U | U | D | S | U | U | U |
| 1 | 5 ms | D | S | U | U | D | D | S | U | U | D |
| 2 | 5 ms | D | S | U | D | D | D | S | U | D | D |
| 3 | 10 ms | D | S | U | U | U | D | D | D | D | D |
| 4 | 10 ms | D | S | U | U | D | D | D | D | D | D |
| 5 | 10 ms | D | S | U | D | D | D | D | D | D | D |
| 6 | 5 ms | D | S | U | U | U | D | S | U | U | D |

Similar to the discussions above, “D” refers to a downlink subframe, “S” refers to special subframe, and “U” refers to an uplink subframe. Ex. 1003, ¶121.

Gaal further discloses that, in TDD, subframes can be classified as fixed subframes or dynamic subframes. Subframes are classified as dynamic if the direction can be dynamically changed (e.g., managed as UL and DL subframes), rather than having a fixed direction. Ex. 1004, ¶[0071].

As an example in Gaal, referring to FIG. 6, the BS could be configured in TDD “subframe configuration 0 (DSUUUDSUUU).” Ex. 1004, ¶[0077]. “In this example, subframes 0/1/2/5/6/7 may be fixed subframes, while subframes 3/4/8/9 may be flexible subframes.” Ex. 1004, ¶[0007]. This is illustrated by Petitioner’s expert below, where downlink subframes are shown in blue and uplink subframes

are shown in yellow (for simplicity, the special subframes are assigned as regular downlink subframes):

**Ex. 1004, Fig. 6 (partial, annotated); Ex. 1003, ¶121**

**Uplink-downlink configurations**

| Uplink-downlink configuration | Downlink-to-Uplink Switch-point periodicity | Subframe number | | | | | | | | | |
|---|---|---|---|---|---|---|---|---|---|---|---|
| | | 0 | 1 | 2 | 3 | 4 | 5 | 6 | 7 | 8 | 9 |
| 0 | 5 ms | D | S | U | | | D | S | U | | |

Flexible Subframes

Gaal states, "[d]ifferent cells may share a common set of fixed subframes such that there is generally no DL-to-UL interference or UL-to-DL interference in the fixed subframes." Ex. 1004, ¶[0076]. *Flexible* subframes, "on the other hand, may be subject to interference" (*e.g.*, DL-to-UL interference or UL-to-DL interference). Ex. 1004, ¶[0076]; Ex. 1003, ¶¶122-23. For flexible subframes, Gaal discloses that "[t]he direction of flexible subframes may change in a dynamic manner, for example, due to scheduler decisions based on traffic needs," or "due to inter-cell and/or intra cell interference considerations" Ex. 1004, ¶[0075]; Ex. 1003, ¶125.

### 2. Claim 10

#### (a) [10.pre]: A wireless base station for a wireless communication network, the wireless base station comprising:

To the extent the preamble is limiting, Gaal renders obvious the preamble. Ex. 1003, ¶¶135-39.

Gaal states that its "disclosure generally relate[s] to wireless communications and, more particularly, to techniques for channel state information (CSI) measurement and reporting for enhanced interference management for traffic adaptation (eIMTA) in long term evolution (LTE)." Ex. 1004, [0003]; Ex. 1003, ¶136. In its "Background," Gaal discloses several examples of wireless communication networks and that a "wireless communication network may include a number of base stations that can support communication for a number of user equipment (UEs)." Ex. 1004, ¶¶[0005]-[0006], FIG. 1; Ex. 1003, ¶137. For example, FIG. 1 illustrates multiple wireless BS. Ex. 1004, Fig. 1, ¶¶[0034]-[0041]; *see also id.*, Fig. 3, ¶¶[0054]-[0062]; Ex. 1003, ¶¶138-39.

**(b) [10.1]: a quality status module configured to determine a respective quality status of a first frequency spectrum resource and a second frequency spectrum resource, wherein each of the first frequency spectrum resource and the second frequency spectrum resource are associated with an air interface that is available for use by the wireless base station for an uplink channel or a downlink channel;**

Gaal renders obvious claim element [10.1]. Ex. 1003, ¶¶140-59. This limitation requires: (1) a first frequency spectrum resource and a second frequency spectrum resource, (ii) each of the first frequency spectrum resource and the second

frequency spectrum resource are associated with an air interface that is available for use by the wireless base station for an uplink channel or a downlink channel, and (iii) a quality status module configured to determine a respective quality status of a first frequency spectrum resource and a second frequency spectrum resource. The following addresses each of these requirements in turn.

***First and second frequency spectrum resources.*** Gaal discloses frequency spectrum resources, including a first frequency spectrum resource and a second frequency spectrum resource.

Gaal discloses LTE subframes that include time-frequency resources. Ex. 1004, ¶[0075]; Ex. 1003, ¶142. For example, FIG. 2 of Gaal, reproduced below, illustrates "a frame structure in a wireless communications network" (in red). Ex. 1004, ¶[0022]; Ex. 1003, ¶143.

**Ex. 1004, Fig. 2 (annotated)**

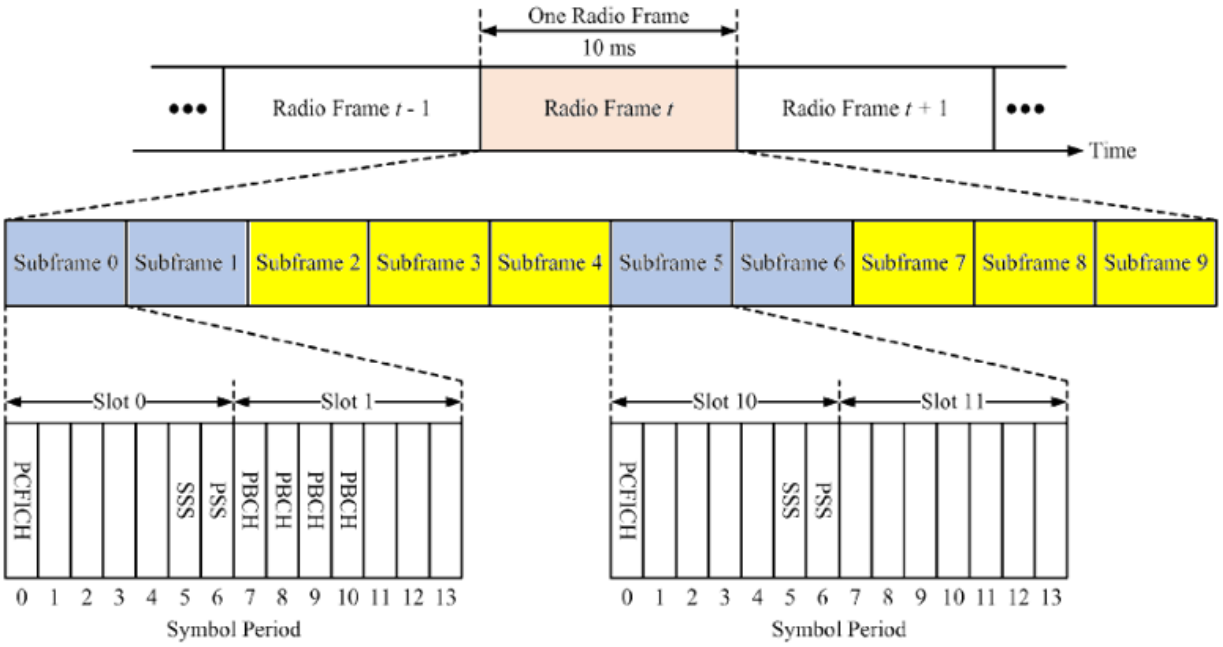


FIG. 2

As described in section VII.B above, each radio frame comprises ten (10) subframes (shown in blue and yellow). Ex. 1004, ¶[0042]; Ex. 1003, ¶143. Each subframe may include two slots. The available time frequency resources of those symbol periods also "may be partitioned into *resource blocks*." Ex. 1004, ¶[0042] (emphasis added). "Each resource block may cover *N* subcarriers (*e.g.*, 12 subcarriers)" in the frequency domain in one slot in the time domain. *E.g.*, Ex. 1004, ¶[0042]. An illustration of the resource blocks in two subframes are illustrated below.

**Ex. 1004, Fig. 2A (annotated); Ex. 1003, ¶144.**

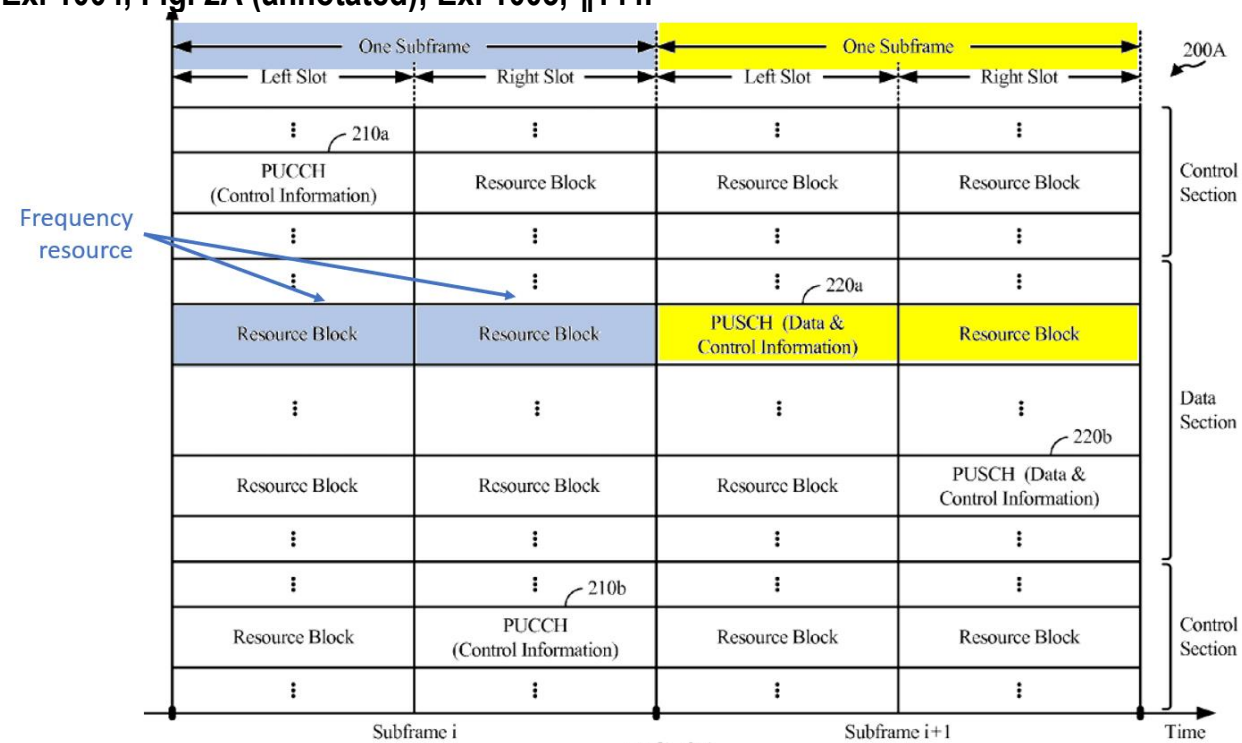


FIG. 2A

A POSITA would understand that each frame, subframe, and resource block is a frequency resource. Ex. 1003, ¶145. Thus, as an example, and two resource blocks are first and second frequency resources as required by the claims of the '361 Patent. *See, e.g.*, Ex. 1001, Cl. 9 ("assigning *the first frequency spectrum resource* to the shared resource pool comprises assigning *a physical resource block that includes multiple subcarriers*"). A POSITA would also understand that two subframes could be the first and second frequency resources of the claims of the '361 Patent. Ex. 1003, ¶145.

***Each of the first frequency spectrum resource and the second frequency spectrum resource are associated with an air interface that is available for use by***

***the wireless base station for an uplink channel or a downlink channel.*** The frequency resources described above are associated with an air interface that is available for use by the base station for an uplink channel or a downlink channel. Ex. 1004, ¶[0075]; Ex. 1003, ¶146.

Gaal discloses that in certain LTE systems, time division duplexing (TDD) frame structures are supported that allow for transmissions in both the downlink and uplink directions on the same frequency band: "TDD is a mode of the common LTE standard that is specified for the unpaired spectrum where the *transmissions travel in both the downlink and uplink directions* on the same frequency band." Ex. 1004, ¶[0069]; Ex. 1003, ¶147.

Gaal discloses that seven (7) possible downlink (DL) and uplink (UL) subframe configurations are supported, as illustrated in FIG. 6.

**Ex. 1004, Fig. 6**

600

**Uplink-downlink configurations**

| Uplink-downlink configuration | Downlink-to-Uplink Switch-point periodicity | Subframe number | | | | | | | | | |
|---|---|---|---|---|---|---|---|---|---|---|---|
| | | 0 | 1 | 2 | 3 | 4 | 5 | 6 | 7 | 8 | 9 |
| 0 | 5 ms | D | S | U | U | U | D | S | U | U | U |
| 1 | 5 ms | D | S | U | U | D | D | S | U | U | D |
| 2 | 5 ms | D | S | U | D | D | D | S | U | D | D |
| 3 | 10 ms | D | S | U | U | U | D | D | D | D | D |
| 4 | 10 ms | D | S | U | U | D | D | D | D | D | D |
| 5 | 10 ms | D | S | U | D | D | D | D | D | D | D |
| 6 | 5 ms | D | S | U | U | U | D | S | U | U | D |

The subframes may be categorized as "fixed" subframes or "flexible (dynamic)" subframes. Ex. 1004, ¶[0075]. "*Fixed* subframes are not expected to change in a dynamic or semi-static manner, but only when a cell determines to change the subframe configurations (*e.g.*, from one of the seven TDD UL/DL subframe configurations shown in FIG. 6 to another of the seven TDD UL/DL subframe configurations) in a static manner." Ex. 1004, ¶[0075].

On the other hand, *flexible* subframes may change dynamically based on traffic needs or interference considerations: "The direction of flexible subframes may change in a dynamic manner, for example, due to scheduler decisions based on traffic needs. As another example, *the direction of a subframe may change due to*

*inter-cell and/or intra-cell interference considerations*." Ex. 1004, ¶[0075]; Ex. 1003, ¶¶148-51.

As an example in Gaal, referring to FIG. 6, the BS could be configured in TDD "subframe configuration 0 (DSUUUDSUUU)." Ex. 1004, ¶[0077]. "In this example, subframes **0/1/2/5/6/7** may be fixed subframes, while subframes **3/4/8/9** may be flexible subframes." Ex. 1004, ¶[0007]. This is illustrated by Petitioner's expert below:

**Ex. 1004, Fig. 6 (partial, annotated); Ex. 1003, ¶152**

**Uplink-downlink configurations**

| Uplink-downlink configuration | Downlink-to-Uplink Switch-point periodicity | Subframe number | | | | | | | | | |
|---|---|---|---|---|---|---|---|---|---|---|---|
| | | 0 | 1 | 2 | 3 | 4 | 5 | 6 | 7 | 8 | 9 |
| 0 | 5 ms | D | S | U | | | D | S | U | | |

Flexible Subframes

In addition, the subframes described in Gaal and explained above are associated with an air interface. For example, the frame structures disclosed by Gaal exist in "a wireless communication network." Ex. 1003, ¶[0022]. The '361 patent describes an "air interface" as "the radio-based communication link between wireless device 120 and node 110 [i.e. BS]." Ex. 1001, 4:24-26. Thus, Gaal's subframe structures for use in a wireless communication network are also associated with an air interface.

Thus, Gaal discloses that each subframe contains frequency spectrum resources that are associated with an air interface that is available for use by the wireless base station for an uplink channel or a downlink channel.

***A quality status module configured to determine a respective quality status of a first frequency spectrum resource and a second frequency spectrum resource.*** Gaal discloses a quality status module that determines the quality status of the frequency resources regardless of whether that term is construed as a means plus function term. In describing the eIMTA method of its LTE network, Gaal states that the "direction of flexible subframes may change in a dynamic manner, for example, due to scheduler decisions based on traffic needs" and that "the *direction of a subframe may change due to inter-cell and/or intra-cell interference considerations.*" Ex. 1004, ¶[0075]; Ex. 1003, ¶¶153-54.

A POSITA would have known that—as described in the '361 Patent—there were known ways to measure channel conditions such as inter-cell and intra-cell interference prior to the '361 Patent. Ex. 1003, ¶155; Ex. 1001, 10:61-11:3. One way to measure channel conditions is through the measurement of CSI reference signals (CSI-RS) in each subframe. Ex. 1003, ¶155; Ex. 1001, 8:60-64. By measuring the CSI-RS and sending it back to the BS, the UE provides information, including quality status, about the radio channel conditions of an air interface available for use between a BS and a UE. Ex. 1003, ¶155.

Gaal discloses a BS that can "receive CSI feedback from a UE" and "process the CSI feedback." *E.g.*, Ex. 1004, ¶¶[0109]-[0110]; Ex. 1003, ¶156. Receiving and processing CSI feedback is one way in which the BS can determine a quality status of a subframe. Ex. 1004, ¶[0057]; Ex. 1003, ¶156; *see also* Ex. 1004, cl. 28 (reciting "at least one processor configured to" perform "process[ing] the CSI feedback.")

CSI feedback was well known in the art. Ex. 1003, ¶157. As described by Petitioner's expert and as explained above in Section VII.D, a POSITA would have known CSI consists of multiple indicators such as Channel Quality Indicator (CQI)—which as its name implies, is a measurement of quality. Ex. 1003, ¶157. The '361 Patent describes CQI as an "existing" "quality status" indicator "typically [] in place in wireless network[s]." Ex. 1003, ¶157; Ex. 1001, 10:61-64 ("In some embodiments, quality status module 113 may *determine this quality status by determining at least one of a channel quality indicator (CQI)* value and a received interference power (RIP) of the first frequency spectrum resource, *CQI and RIP are each existing channel performance measures that may already typically be in place in wireless network.*" (emphasis added)).

CQI is a simplified quantization of the measure of signal-to-interference-plus-noise ratio (SINR), which as Petitioner's expert explains is a measurement that will be lower in the presence of interference. Ex. 1003, ¶83. The possible CQI values were defined by the LTE standard, with each value representing a different signal

quality for supporting certain modulation and coding schemes which result in higher or lower efficiency of each measured subframe. Ex. 1003, ¶84. The following image is a table with the CQI index setting forth the values:

**Ex. 1009, Table 7.2.3-1**

**Table 7.2.3-1: 4-bit CQI Table**

| CQI index | modulation | code rate x 1024 | efficiency |
|---|---|---|---|
| 0 | out of range | | |
| 1 | QPSK | 78 | 0.1523 |
| 2 | QPSK | 120 | 0.2344 |
| 3 | QPSK | 193 | 0.3770 |
| 4 | QPSK | 308 | 0.6016 |
| 5 | QPSK | 449 | 0.8770 |
| 6 | QPSK | 602 | 1.1758 |
| 7 | 16QAM | 378 | 1.4766 |
| 8 | 16QAM | 490 | 1.9141 |
| 9 | 16QAM | 616 | 2.4063 |
| 10 | 64QAM | 466 | 2.7305 |
| 11 | 64QAM | 567 | 3.3223 |
| 12 | 64QAM | 666 | 3.9023 |
| 13 | 64QAM | 772 | 4.5234 |
| 14 | 64QAM | 873 | 5.1152 |
| 15 | 64QAM | 948 | 5.5547 |

A POSITA would have known that CSI reports include CQI. For example, the prior art standards explicitly state that CSI "consists of 'Channel Quality Indicator (CQI), precoding matrix (PMI), precoding type indicator (PTI), and/or rank indication (RI).'" Ex. 1009 at 58; Ex. 1003, ¶81 (citing Ex. 1009 at 69 ("A UE is semi-statically configured by higher layers to periodically feed back different CSI components (CQI, PMI, PTI, and/or RI)[.]")).

Indeed, CQI as a component of CSI feedback is a textbook principle that pre-dates the 361 patent by years. *See, e.g.*, Ex. 1003, ¶82; Ex. 1012 at 352 (explaining CSI as "including[ing] Channel Quality Indicators (CQIs) as well as the MIMO-

related feedback consisting of RIs and PMIs."); *see also* Ex. 1014 (disclosing a "method for transmitting channel status information (CSI) . . . including at least one of . . . a channel quality indicator (CQI)[.]").

Thus, a POSITA would have understood (or at least found it obvious) that the CQI may be provided in a CSI feedback report provided by a UE and then used by the BS to determine a quality status of the subframes. Ex. 1004, ¶[0022]; Ex. 1003, ¶¶81, 157 (citing, *e.g.*, Ex. 1009 at 58); Ex. 1001, 8:60-64.

The same conclusion is reached under the means plus function construction of the term as well. A POSITA would have recognized that taking into account interference considerations is the same as the function of the claim (determining a respective quality status of a first frequency spectrum resource and a second frequency spectrum resource). Ex. 1003, ¶158. The structure disclosed in Gaal is likewise a general purpose processor. Ex. 1004, cl. 28 (reciting "at least one processor configured to" perform "process[ing] the CSI feedback."). Finally, as described above, a POSITA would have recognized (or at least found it obvious) that the algorithm executed by the processor to measure and process the CSI feedback could be through a "channel quality indicator (CQI)," or more broadly "and/or any other suitable quality metric or key performance indicator," as described in '361 Patent specification. Ex. 1001, 4:28-34; Ex. 1003, ¶158.

Finally, Gaal discloses that the quality status is measured on the frequency resources, including the first frequency resource. Gaal states "[c]hannel state information reference signals (CSI-RS) may be transmitted in the flexible subframes." Ex. 1004, ¶¶[0081], [0084]; Ex. 1003, ¶159; Ex. 1001, 8:60-64. A POSITA would have understood (or at least found it trivially obvious) to use the CSI-RS in the flexible subframe in its intended manner and send a CSI report containing quality status such as CQI back to the BS.

**(c) [10.2]: a processor coupled to the quality status module and configured to:**

Gaal renders obvious claim element [10.2]. Ex. 1003, ¶¶160-62.

Gaal illustrates in FIG. 3 and discloses a controller/processor 340 of eNB 110. Ex. 1004, FIG. 3; Ex. 1003, ¶161. Gaal further discloses that the controller/processor 340 is connected to receive processor 338, shown below in green. Ex. 1004, Fig. 3, ¶[0058]; Ex. 1003, ¶161.

**Ex. 1004, Fig. 3 (annotated)**

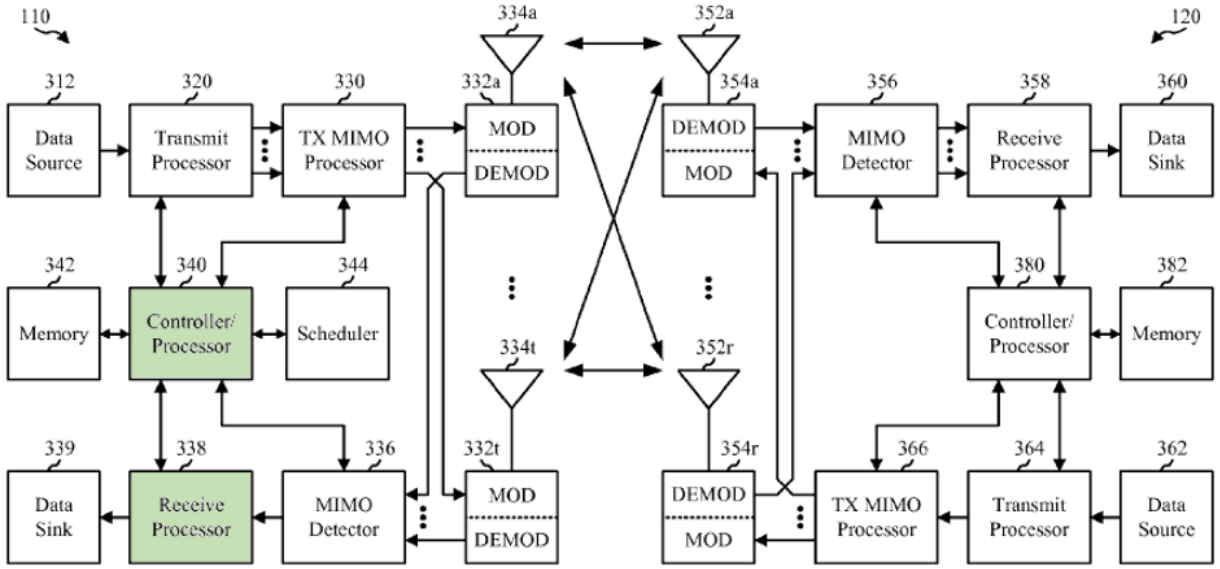


FIG. 3

Gaal discloses that "[t]he controller/processor 340, receive processor 338, and/or other processors and modules at the eNB 110 may perform or direct operations 800 in FIG. 8 and/or other processes for the techniques described herein." Ex. 1004, ¶[0058]; Cl. 28 (reciting "at least one processor configured to" perform "process[ing] the CSI feedback.")

Thus, Gaal discloses the recited processor coupled to the quality status module.

**(d) [10.3]: determine, based on the quality status of the first frequency spectrum resource, that the first frequency spectrum resource is a sub-optimal resource, for the uplink channel and the downlink channel, relative to other frequency spectrum resources that are available for use by the wireless base station; and**

Gaal renders obvious claim element [10.3]. Ex. 1003, ¶¶163-71.

First, as described above for claim element [10.1], Gaal discloses determining a quality status of a first frequency spectrum resource. Gaal discloses that the first frequency spectrum resource of a subframe may be flexible and that the directionality of a flexible subframe is dynamic and changes based on "traffic needs" or on "inter-cell and/or intra-cell interference considerations." Ex. 1004, ¶[0075]; *see also id.*, Fig. 6 (illustrating configurations of subframes with dynamic subframes), ¶¶[0071]-[0074] (describing classifying subframes as dynamic or fixed); Ex. 1003, ¶164.

Second, Gaal discloses (or at least renders obvious) determine, based on the quality status of the first frequency spectrum resource, that the first frequency spectrum resource is a *sub-optimal* resource for the uplink and downlink channel *relative* to other frequency spectrum resources that are available for use by the wireless base station. Gaal discloses that flexible subframes are sub-optimal relative to other frequency spectrum resources. Ex. 1003, ¶165. In particular, Gaal identifies that *fixed* subframes do not have the same interference concerns as the flexible subframes: "Different cells may share a common set of *fixed* subframes such that there is generally *no* DL-to-UL interference or UL-to-DL interference in the fixed subframes." Ex. 1004, ¶[0076]. "Flexible subframes, on the other hand, may be subject to interference (e.g., DL-to-UL interference or UL-to-DL interference)." Ex.

1004, ¶[0076]. As shown below by Petitioner's expert, inter-cell uplink-downlink interference is created in flexible SFs when one BS chooses uplink and another BS chooses downlink for the flexible subframe. Ex. 1003, ¶166.

**Ex. 1003, ¶166**

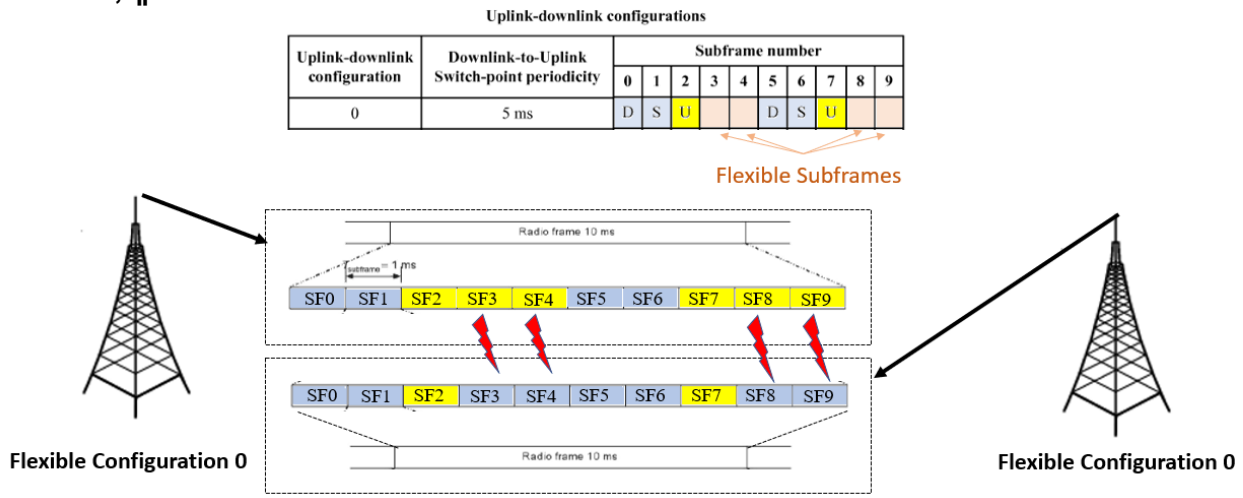


Thus, the flexible subframe is the first frequency resource and, due to the interference caused by its flexibility, is sub-optimal compared to the fixed subframes where there "is generally no DL-to-UL interference or UL-to-DL interference." Ex. 1004, ¶[0076]; Ex. 1003, ¶¶167-68. Further, Gaal teaches that subframes can be changed from fixed to flexible, and that "the direction of a subframe may change due to inter-cell and/or intra-cell interference considerations." Ex. 1004, ¶[0075]. This disclosure teaches, or at least renders obvious, the idea that certain cells could have been determined to be configured as either flexible or regular in an effort to mitigate inter-cell interference as well. Ex. 1003, ¶¶167-68. This concept was a well-known feature in the prior art, as described above in Section VII.E. Thus, at

minimum, a POSITA would have found it obvious that Gaal allows for changing a fixed subframe to a flexible subframe in response to determining interference in that subframe. *See, e.g., supra* Section VII.E. In the alternative, as discussed below in Ground 2, it would have been obvious to treat a fixed frame as the "first frequency resource," which is converted to a flexible frame based on interference measurements. *See infra* Section VIII.B.3.

Moreover, a POSITA would have understood Gaal's disclosure of inter-cell and/or intra-cell interference would include the use of CSI/CQI to measure such interference, or at least that it would be obvious to do so. Ex. 1004, ¶¶[0068]-[0075]; Ex. 1003, ¶169. Gaal has an entire subsection dedicated to "Example CSI Measurement and Reporting for EIMTA in LTE." Ex. 1004, ¶¶[0069]-[0110]. A POSITA would have understood that CQI indicates how well the signal is received, considering factors like signal strength, interference, and noise. Ex. 1003, ¶¶170-71. A POSITA would have known (and it is defined by the LTE standard), that CQI values are ranked 0 to 15. Ex. 1003, ¶171. A POSITA would have known that when two CQI for two resource blocks are compared that the lower CQI value would be sub-optimal due to it representing a lower quality status Ex. 1009, Table 7.2.3-1; Ex. 1003, ¶171.

Using the CQI to rank resources is also how the '361 Patent describes the determination of a sub-optimal resource. Ex. 1003, ¶172. "For example, in some

embodiments, subcarriers with high CQI, which may indicate that the subcarrier is well-suited for a downlink channel, may be assigned . . . ." Ex. 1001, 9:8-11. "In such embodiments, the assigned subcarriers may be ranked in order of suitability." Ex. 1001, 9:14-16. Thus, it would have been obvious to a POSITA to use flexible subframes for sub-optimal resources, and a POSITA would have also understood that the BS would have made a determination as to which resources are sub-optimal when determining which resources to use as flexible subframes. *See, e.g.*, Ex. 1004, Abs. (disclosing that the BS is "determining whether a current flexible subframe is for either uplink or downlink communications"); *see also* Ex. 1004, ¶¶[0009]-[0011]; Ex. 1003, ¶165. Indeed, this concept is expressly disclosed in Gaal: "The apparatus generally includes at least one processor configured to identify, within a set of subframes, one or more flexible subframes that may be dynamically managed for either uplink or downlink communications, *determine whether a current flexible subframe is for either uplink or downlink communications, and perform at least one of channel measurement*, interference measurement, or channel state reporting based on the determination." Ex. 1004, ¶[0012].

Thus, a POSITA would have understood Gaal to render obvious claim element [10.3].

**(e) [10.4]: in response to the determination that the first frequency spectrum resource is the sub-optimal resource, assign the first frequency spectrum resource to a shared resource pool; and**

Gaal renders obvious claim element [10.4]. Ex. 1003, ¶¶173-76.

As described above, Gaal discloses that time division duplexing (TDD) frame structures are supported that allow for transmissions in both the downlink and uplink directions on the same frequency band and the use of flexible subframes that can be scheduled for uplink or downlink based on traffic needs or interference considerations. Ex. 1004, ¶[0069]; Ex. 1003, ¶174. As noted above, these flexible subframes are "sub-optimal" compared to the fixed subframes because the flexible subframes are subject to interference: Ex. 1004, ¶[0076] ("*Flexible* subframes, on the other hand, may be subject to interference (e.g., DL-to-UL interference or UL-to-DL interference)" (emphasis added); Ex. 1003, ¶175. These sub-optimal flexible subframes can be allocated to either uplink or downlink and therefore constitute the claimed shared resources in the shared resource pool. Ex. 1003, ¶175.

This interpretation is consistent with how the '361 Patent describes the shared resource pool. "Furthermore, in some embodiments, a particular frequency spectrum resource *assigned to shared resource pool* 118 may be scheduled by scheduler module 114 of node 110 *for an uplink or a downlink channel based on suitability of* the particular frequency spectrum resource for an uplink or a downlink channel, respectively." Ex. 1001, 10:8-13. This description is consistent with, or at least obvious in view of, Gaal's disclosure about the use of interference considerations using the enhanced interference management technique. Ex. 1003, ¶176.

Thus, a POSITA would have understood Gaal to render obvious claim element [10.4]. In the alternative, as discussed below in Ground 2, it would have been obvious to treat a fixed frame as the "first frequency resource," which is assigned to be a flexible subframe based on interference measurements. *See infra* Section VIII.B.3.

**(f) [10.5]: a scheduler module coupled to the processor and configured to:**

Gaal renders obvious claim element [10.5]. Ex. 1003, ¶¶177-80.

Gaal discloses an eNB with a scheduler 344. Ex. 1004, Fig. 3, ¶[0024]; Ex. 1003, ¶178.

**Ex. 1004, Fig. 3**

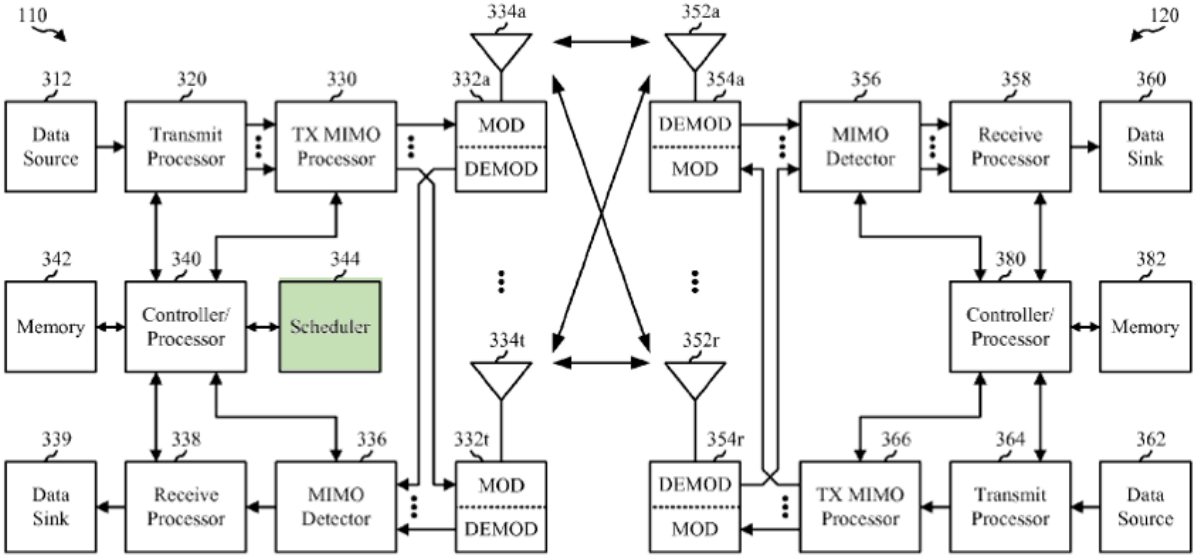


FIG. 3

As illustrated in FIG. 3, the scheduler 344 is coupled to the controller/processor 340 of the eNB 110. Ex. 1004, Fig 3; Ex. 1003, ¶179. Gaal

discloses that the controllers/processors 340 may direct the operations of the scheduler 344 described by Gaal, and the "scheduler 344 may schedule UEs for data transmission on the downlink and/or uplink." Ex. 1004, ¶[0058]; Ex. 1003, ¶180.

Thus, a POSITA would have understood that Gaal renders obvious claim element [10.5].

**(g) [10.6]: schedule the second frequency spectrum resource for the uplink channel or the downlink channel based on an initial directional allocation of frequency spectrum resources for the wireless base station;**

Gaal renders obvious claim element [10.6]. Ex. 1003, ¶¶181-85.

Gaal discloses the initial directional allocation of communication resources. The initial directional allocation is the directional allocation given in the table in FIG. 6. Ex. 1004, Fig. 6; Ex. 1003, ¶¶182-83. For example, the initial directional allocation of an eNB with configuration 0 is below:

**Ex. 1004, Fig 6 (partial)**

**Uplink-downlink configurations**

| Uplink-downlink configuration | Downlink-to-Uplink Switch-point periodicity | Subframe number | | | | | | | | | |
|---|---|---|---|---|---|---|---|---|---|---|---|
| | | 0 | 1 | 2 | 3 | 4 | 5 | 6 | 7 | 8 | 9 |
| 0 | 5 ms | D | S | U | U | U | D | S | U | U | U |

Assuming the "special" subframe is a regular downlink subframe,[1] the initial direction allocation of the radio frame can be illustrated below with blue subframes representing downlink and yellow subframes representing uplink subframes.

**Ex. 1004, Fig. 2 (annotated).**

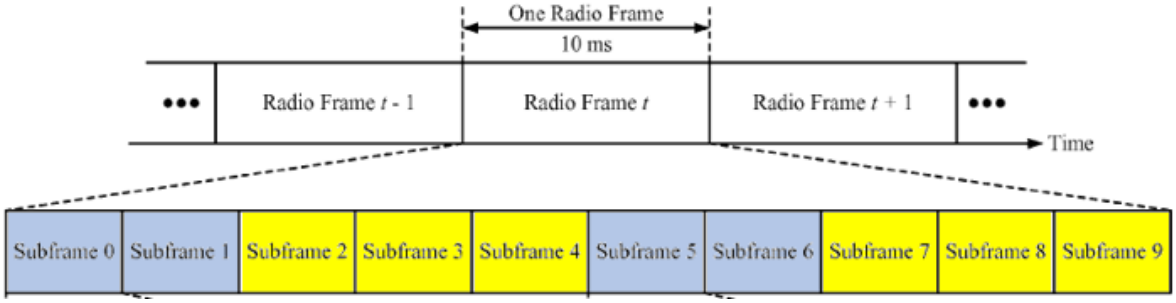


Thus, a POSITA would have understood Gaal render obvious claim element [10.6].

**(h) [10.7]: determine an updated directional allocation of frequency spectrum resource for the wireless base station after the second frequency spectrum resource is scheduled for the uplink channel or the downlink channel; and**

Gaal renders obvious claim element [10.7]. Ex. 1003, ¶¶186-96.

Gaal discloses the use of flexible subframes that can be scheduled after the initial directional allocation is scheduled above, based on traffic needs, for example:

[1] Gaal discloses that the "special" subframes may, but need not, contain both uplink and downlink slots, which is consistent with how a POSITA would have understood special subframes. Ex. 1004, ¶[0070]; Ex. 1003, ¶184.

**Ex. 1004, Fig. 6 (annotated); Ex. 1003, ¶187**

**Uplink-downlink configurations**

| Uplink-downlink configuration | Downlink-to-Uplink Switch-point periodicity | Subframe number | | | | | | | | | |
|---|---|---|---|---|---|---|---|---|---|---|---|
| | | 0 | 1 | 2 | 3 | 4 | 5 | 6 | 7 | 8 | 9 |
| 0 | 5 ms | D | S | U | | | D | S | U | | |

Flexible Subframes

As stated in Gaal, "In this example, subframes **0/1/2/5/6/7** may be fixed subframes, while subframes **3/4/8/9** may be flexible subframes." Ex. 1004, ¶[0077]. These are subframes that will be assigned as part of the updated directional allocation. Ex. 1003, ¶189.

The '361 Patent describes that an updated directional allocation may be based on based on one or more of a plurality of factors including "*the number of current resource requests from wireless devices 120* [or] *the number of current resource requests from node 110*, [etc.] . . . ." Ex. 1001, 9:49-58, 12:35-48 (describing the same updated directional allocation for block 406 of FIG. 4); Ex. 1003, ¶¶190-91. A POSITA would have understood these factors are based on, *e.g.*, traffic needs. Ex. 1003, ¶¶190-91.

In the case of Gaal, the flexible subframes will be scheduled based on similar factors, such as traffic needs: "The direction of flexible subframes may change in a dynamic manner, for example, due to scheduler *decisions based on traffic needs*."

Ex. 1004, ¶[0075]; Ex. 1003, ¶192. Gaal discloses one reason to change the flexible subframes would be, "As an illustrative example of eIMTA, if during a short duration a large data burst on downlink is desired, the configuration may be changed to *a more downlink heavy subframe configuration*." Ex. 1004, ¶[0072]. A "more downlink heavy subframe configuration" is shown in the updated allocation in the figure below, where the traditional uplink subframes of configuration 0 (highlighted in pink in the top figure) have been dynamically allocated to downlink (in the bottom figure):

**Ex. 1004, Fig 6 (annotated); Ex. 1003, ¶194**

**Initial Allocation**

**Uplink-downlink configurations**

| Uplink-downlink configuration | Downlink-to-Uplink Switch-point periodicity | Subframe number | | | | | | | | | |
|---|---|---|---|---|---|---|---|---|---|---|---|
| | | 0 | 1 | 2 | 3 | 4 | 5 | 6 | 7 | 8 | 9 |
| 0 | 5 ms | D | S | U | U | U | D | S | U | U | U |

**Updated Allocation**

**Uplink-downlink configurations**

| Uplink-downlink configuration | Downlink-to-Uplink Switch-point periodicity | Subframe number | | | | | | | | | |
|---|---|---|---|---|---|---|---|---|---|---|---|
| | | 0 | 1 | 2 | 3 | 4 | 5 | 6 | 7 | 8 | 9 |
| 0 | 5 ms | D | S | U | D | D | D | S | U | D | D |

To the extent that Patent Owner argues that Gaal does not disclose the timing of when the scheduler schedules the flexible subframes, it would have been obvious

to do so after scheduling the fixed subframes. Ex. 1003, ¶196. As disclosed in Gaal, "fixed subframes" generally have no risk of "DL-to-UL interference or UL-to-DL interference." Ex. 1004, ¶[0076]. A POSITA would have understood that, in determining updated allocation based on traffic needs, the fixed downlink subframes would be first assigned to downlink resource needs and then the fixed uplink subframes would be first assigned to uplink resource needs. Ex. 1003, ¶196. After this, a POSITA would have understood that the scheduler will determine interference and traffic in the network and allocate the direction of the remaining subframes (*i.e.*, the flexible subframes). Ex. 1004, ¶[0075]; Ex. 1003, ¶196.

Thus, a POSITA would have understood Gaal to render obvious claim element [10.7].

**(i) [10.8]: schedule the first frequency spectrum resource based on the updated directional allocation of frequency spectrum resources for the wireless base station.**

Gaal renders obvious claim element [10.8]. Ex. 1003, ¶¶197-200.

As described above regarding claim element [10.5], Gaal discloses a schedule module of scheduler 344 for scheduling UL-DL subframes. Gaal disclosed that the scheduling of UL-DL subframes included flexible subframes that are dynamically changed due to scheduler decisions based on traffic needs Ex. 1004, ¶[0075]; Ex. 1003, ¶198.

Given that the flexible subframes were already allocated to the shared resource pool and available for either uplink or downlink allocation, a POSITA would have understood from Gaal's disclosure that the next step is to actually schedule the subframe for the uplink or downlink based on the updated allocation. Ex. 1003, ¶199. That is, a POSITA would have understood that, as directional needs are continually and dynamically updated due to traffic and channel conditions, Gaal discloses the directional resources are scheduled for uplink or downlink transmission based on those needs. Ex. 1004, ¶[0075]; Ex. 1003, ¶199.

Thus, a POSITA would have understood Gaal to render obvious claim element [10.8].

### 3. Claim 11: The base station of claim 10, further comprising: a memory coupled to the processor and configured to store an uplink resource pool, a downlink resource pool, and the shared resource pool, wherein the processor is further configured to assign, based on the determined quality status of the second frequency spectrum resource, the second frequency spectrum resource to one of the uplink resource pool or downlink resource pool.

As described above, Gaal renders obvious the base station of claim 10. Gaal also renders obvious claim 11. Ex. 1003, ¶¶201-06.

Gaal discloses a BS with a memory 342. Ex. 1004, ¶[0058]; Ex. 1003, ¶202. FIG. 3 illustrates a BS as eNB 110 that includes memory 342 coupled to controller/processor 340. Ex. 1004, Fig. 3; Ex. 1003, ¶203.

**Ex. 1004, Fig. 3 (annotated); Ex. 1003, ¶203.**

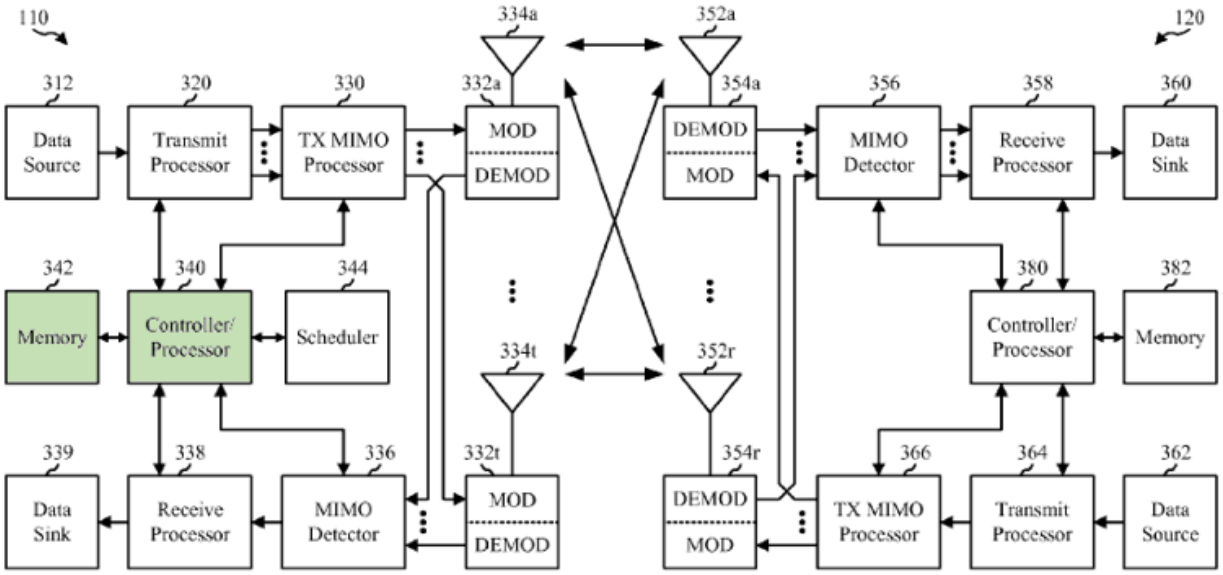


FIG. 3

A POSITA would have understood that the memory would have stored information about the available resources, including their respective quality status and assigned pool, including the uplink resource pool, the downlink resource pool, and the shared resource pool. Ex. 1003, ¶204. At the very least, a POSITA would have found it obvious to use the memory to store the information. *Id.*, ¶205. Likewise, a POSITA would have understood the processor (the entity attached to the memory) would have been responsible for executing steps like the assignment of resources to the different pools in the memory based on the determined quality status. *Id.*, ¶206. At the very least, given the only entity attached to the memory is a processor, a POSITA would have found it obvious to use the processor for this purpose. *Id.*

Thus, Gaal renders obvious claim 11.

**4. Claim 12: The wireless base station of claim 10, wherein the updated directional allocation of frequency spectrum resources is based on one or more of: current resource requests from a wireless device serviced by the wireless base station, current resource requests from the wireless base station, a number of frequency spectrum resources scheduled from an uplink resource pool for uplink channels, and a number of frequency spectrum resource scheduled from a downlink resource pool for downlink channels.**

As described above, Gaal renders obvious the wireless base station of claim 10. Gaal also renders obvious claim 12. Ex. 1003, ¶¶207-10.

Gaal discloses that the flexible subframes will be scheduled based on factors described in this claim limitation, such as traffic needs: "The direction of flexible subframes may change in a dynamic manner, for example, due to scheduler *decisions based on traffic needs*." Ex. 1004, ¶[0075]; Ex. 1003, ¶208. Gaal discloses one reason to change the flexible subframes would be, "As an illustrative example of eIMTA, if during a short duration a large data burst on downlink is desired, the configuration may be changed to *a more downlink heavy subframe configuration*." Ex. 1004, ¶[0072].

A POSITA would have understood that Gaal's disclosure of "traffic needs" is equivalent to the claim element describing "current resource requests from a wireless device serviced by the wireless base station" and "current resource requests from the

wireless base station." Ex. 1003, ¶210. A POSITA would have understood these factors are based on, *e.g.*, traffic needs.

Thus, a POSITA would have understood Gaal to render obvious claim 12.

**5. Claim 13: The wireless base station of claim 10, wherein the initial directional allocation of frequency spectrum resources is based on current resource requests from a wireless device serviced by the wireless base station, and current resource requests from the wireless base station.**

As described above, Gaal renders obvious the wireless base station of claim 10. Gaal also renders obvious claim 13. Ex. 1003, ¶¶212-14.

Gaal discloses that the scheduling of subframes is performed dynamically, including based on traffic needs. Ex. 1004, ¶[0075] (emphasis added); Ex. 1003, ¶213.

A POSITA would have understood that Gaal's disclosure of scheduling subframes based on traffic needs discloses (or at least renders obvious) that the initial directional allocation of frequency spectrum resources is based on current resource requests from a wireless device (*e.g.*, traffic needs) serviced by the BS, and current resource requests (*e.g.*, traffic needs) from the BS. Ex. 1003, ¶214.

Thus, a POSITA would have understood Gaal to render obvious claim 13.

**6. Claim 15: The wireless base station of claim 10, wherein the first frequency spectrum resource includes multiple**

**subcarriers and multiple resource elements associated with each of the multiple subcarriers.**

As described above, Gaal renders obvious the wireless base station of claim 10. Gaal also renders obvious claim 15. Ex. 1003, ¶¶214-18.

As described above, Gaal discloses a frequency spectrum resource of a subframe or a resource block: "The available time frequency resources may be partitioned into resource blocks." Ex. 1004, ¶[0042]. Gaal further discloses that each resource block has multiple subcarriers: "Each resource block may cover N subcarriers (e.g., 12 subcarriers) in one slot." Moreover, Gaal discloses that "a number of resource elements may be available in each symbol period." Ex. 1004, [0046]. Multiple resource elements are also shown in Figure 4 below, where each square represents at least one resource element. Ex. 1004, ¶[0063]; Ex. 1003, ¶¶215-17.

**Ex. 1004, Fig. 4**

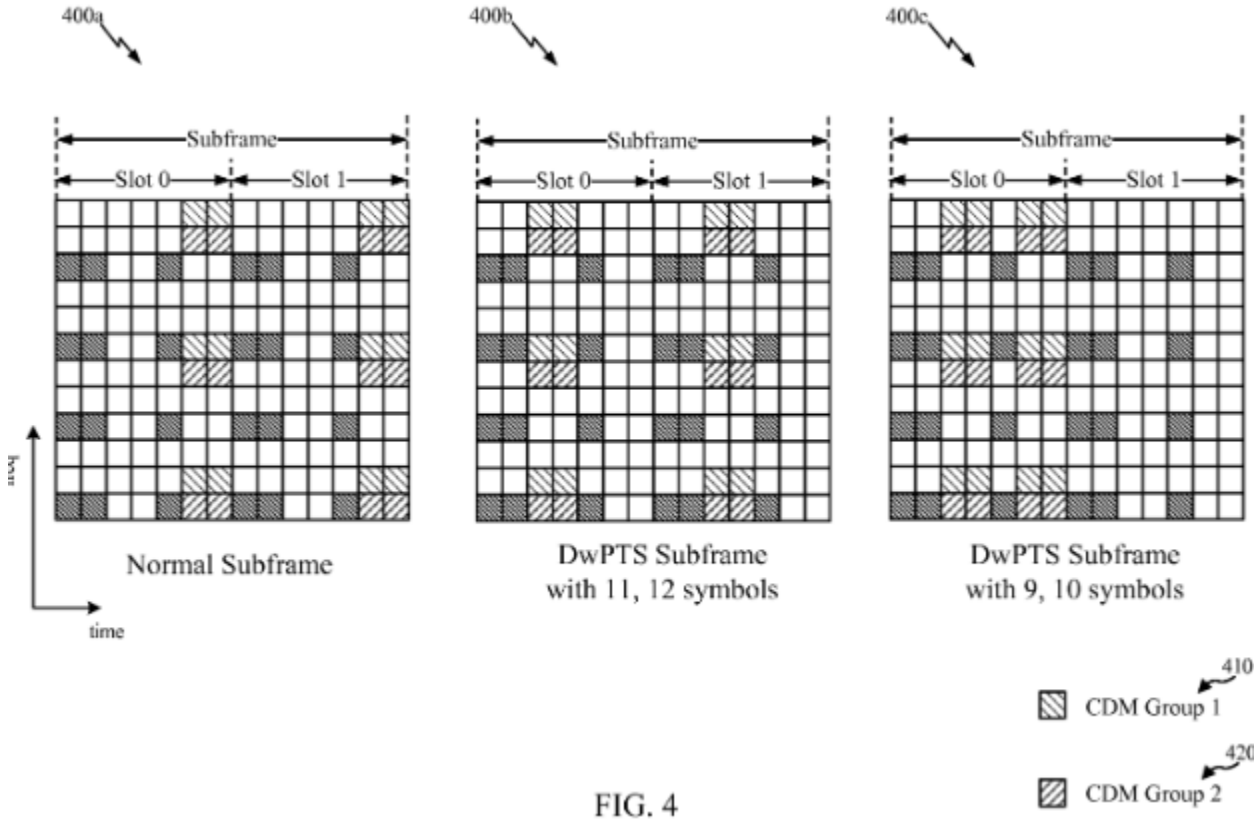


FIG. 4

To the extent the Patent Owner argues that the above disclosure does not show multiple resource elements, Gaal renders this limitation obvious because a POSITA would have understood the subframe disclosed by Gaal would be in accordance with a subframe set forth in LTE standards. Ex. 1003, ¶18. A POSITA would have known that such subframes include multiple subcarriers and multiple resource elements associated with each of the multiple subcarriers. *Id.*

Thus, a POSITA would have understood Gaal to render obvious claim 15.

### 7. Claim 17

#### (a) [17.pre]: A non-transitory computer-readable medium that includes computer-executable instructions stored thereon, which in response to execution by a processor, cause the processor to perform or control performance of operations that comprise:

To the extent the preamble is limiting, Gaal renders obvious this preamble. Ex. 1003, ¶¶219-20. Gaal discloses that its operations are contained in computer-executable instructions are executed by a processor. Ex. 1004, ¶[0117]; Ex. 1003, ¶220.

#### (b) [17.1]: determine a quality status of a first frequency spectrum resource that is available for use by a base station for an uplink channel or a downlink channel;

Gaal renders obvious claim element [17.1] for the reasons described above for element [10.1]. Ex. 1003, ¶¶221-26. As described above, Gaal states that "the *direction of a subframe may change due to inter-cell and/or intra-cell interference considerations.*" Ex. 1004, ¶[0075]; Ex. 1003, ¶223. Thus, a POSITA would have implemented known ways to measure channel conditions. Ex. 1003, ¶223; Ex. 1001, 10:61-11:3. One way to measure channel conditions is through the measurement of CSI-RS in each subframe. Ex. 1003, ¶224; Ex. 1001, 8:60-64. Gaal discloses that a BS can "receive CSI feedback from a UE" and "process the CSI feedback." *E.g.*, Ex. 1004, ¶¶[0109]-[0110]; Ex. 1003, ¶226. Receiving and processing CSI feedback is

one way in which the BS can determine a quality status of a subframe. Ex. 1004, ¶[0057]; Ex. 1003, ¶226.

**(c) [17.2]: determine, based on the quality status, that the first frequency spectrum resource is a sub-optimal resource, for the uplink channel and the downlink channel, relative to other frequency spectrum resources that are available for use by the base station,**

Gaal renders obvious claim element [17.2] for the reasons described above for element [10.3]. Ex. 1003, ¶¶227-30. As described above, Gaal discloses (or at least renders obvious) the fact that the flexible subframes are sub-optimal relative to other frequency spectrum resources, and thus it would have been obvious to a POSITA to use flexible subframes for sub-optimal resources. *Id.*, ¶229. Further, a POSITA would have also understood that the BS would have determined which resources are sub-optimal relative to other frequency spectrum resources when determining which resources to use as flexible subframes. *Id.*, ¶230.

**(d) [17.3]: wherein to determine that the first frequency spectrum resource is the sub-optimal resource, the computer-executable instructions, in response to execution by the processor, cause the processor to perform or control performance of at least one operation that comprises: determine that a channel quality indicator (CQI) of the first frequency spectrum resource is less than a respective CQI of one or more other frequency spectrum resources that are available for use by the base station; and determine that a received interference power (RIP) of the first frequency spectrum resources is greater than a respective RIP of the one or more other frequency**

**spectrum resources that are available for use by the base station;**

Gaal renders obvious claim elements [17.3] for the reasons described above for claim elements [10.2] and [10.3], as well as the reasons below. Ex. 1003, ¶¶231-45. This element can be broken down into the following parts: (i) to determine the first frequency resource is sub-optimal, cause the processor to perform at least one operation that comprises either (ii.a) determine that a channel quality indicator (CQI) of the first frequency spectrum resource is less than a respective CQI of one or more other frequency spectrum resources that are available for use by the base station, or (ii.b) determine that a received interference power (RIP) of the first frequency spectrum resources is greater than a respective RIP of the one or more other frequency spectrum resources that are available for use by the base station.

Due to the "at least one operation that comprises" language, Gaal only needs to disclose or render obvious either (ii.a) or (ii.b), although a POSITA would have known of both operations as they were well known in the art. Ex. 1003, ¶235.

***"to determine the first frequency resource is sub-optimal, cause the processor to perform at least one operation that comprises either."*** As described above for claim elements [10.2], [10.3] and [17.pre], Gaal discloses a controller/processor 340 is connected to receive processor 338, shown below in green. Ex. 1004, Fig. 3, ¶[0058], Cl. 28; Ex. 1003, ¶¶237-38.

**Ex. 1004, Fig. 3**

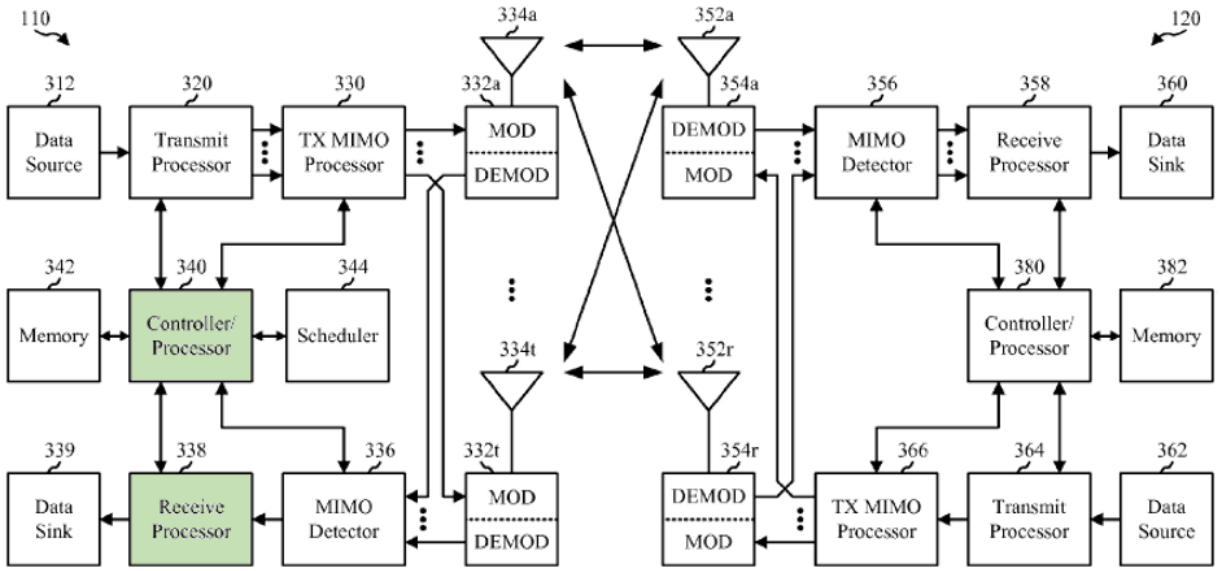


FIG. 3

***"determine that a channel quality indicator (CQI) of the first frequency spectrum resource is less than a respective CQI of one or more other frequency spectrum resources that are available for use by the base station."*** As described above with respect to element [10.3], a POSITA would have understood Gaal's disclosure of inter-cell and/or intra-cell interference to include the use of CSI/CQI to measure such interference, or at least that it would be obvious to do so. *E.g.*, Ex. 1004, ¶¶[0068]-[0075]; Ex. 1003, ¶241. Gaal has an entire subsection dedicated to "Example CSI Measurement and Reporting for EIMTA in LTE." Ex. 1004, ¶¶[0069]-[0110]. As noted above, a POSITA would have understood that CQI was a well-known CSI metric that indicates how well the signal is received, considering factors like signal strength, interference, and noise. Ex. 1003, ¶¶170-71. A POSITA

would have known (and it is defined by the LTE standard), that CQI values are ranked 0 to 15. Ex. 1003, ¶171. A POSITA would have known that when two CQI for two resource blocks are compared that the lower CQI value would be sub-optimal due to it representing a lower quality status. Ex. 1009, Table 7.2.3-1; Ex. 1003, ¶171.

***"determine that a received interference power (RIP) of the first frequency spectrum resources is greater than a respective RIP of the one or more other frequency spectrum resources that are available for use by the base station."*** Although Gaal discloses the use of CSI/CQI, the use of other known measurements such as Received Interference Power (RIP) would also have been well known to a POSITA at the time of the '361 Patent. Ex. 1003, ¶¶243-45; *see also id.* ¶86. As discussed by Petitioner's expert, Received Interference Power was also a known uplink interference tool available to a POSITA. Ex. 1003, ¶244; *id.* ¶86. Thus, the choice to use RIP or CQI was simply one of two available design choices to a POSITA. Ex. 1003, ¶245. Given the disclosures in Gaal, a POSITA would have obviously chosen between one of these two design choices to measure interference on the flexible subframe. *Id.*, ¶245.

Thus, claim element [17.3] is rendered obvious by Gaal.

**(e) [17.4]: in response to the determination that the first frequency spectrum resource is the sub-optimal resource, assign the first frequency spectrum resource to a shared resource pool;**

Gaal renders obvious claim element [17.4] for the reasons described above for claim element [10.4]. As described above, the sub-optimal flexible subframes can be allocated to either uplink or downlink and therefore constitute the claimed shared resources in the shared resource pool. Ex. 1003, ¶¶174-76.

**(f) [17.5]: schedule, based on an initial directional allocation of communication resources for the base station, a second frequency spectrum resource that is available for use by the base station for the uplink channel or the downlink channel;**

Gaal renders obvious claim element [17.5] for the reasons described above for claim element [10.6]. As described above, Gaal discloses the initial directional allocation of communication resources. Ex. 1004, Fig. 6. The initial directional allocation is the directional allocation given in the table in FIG. 6 of Gaal. Ex. 1004, Fig. 6; Ex. 1003, ¶183.

**(g) [17.6]: after the second frequency spectrum resource is scheduled for use by the base station, determine an updated directional allocation of communication resources for the base station; and**

Gaal renders obvious claim element [17.6] for the reasons described above for claim element [10.7].

As described above, Gaal discloses the use of flexible subframes that can be scheduled after the initial directional allocation is scheduled above, based on traffic needs, for example. "The direction of flexible subframes may change in a dynamic manner, for example, due to scheduler *decisions based on traffic needs*." Ex. 1004,

¶[0075]; Ex. 1003, ¶252. Gaal discloses one reason to change the flexible subframes would be "[a]s an illustrative example of eIMTA, if during a short duration a large data burst on downlink is desired, the configuration may be changed to *a more downlink heavy subframe configuration*." Ex. 1004, ¶[0072].

To the extent that Patent Owner argues that Gaal does not disclose the exact timing of when the scheduler schedules the flexible subframes, it would have been obvious to do so after scheduling the fixed subframes. Ex. 1003, ¶253. As disclosed in Gaal, "fixed subframes" generally have no risk of "DL-to-UL interference or UL-to-DL interference." Ex. 1004, ¶[0076]. A POSITA would have understood that, in determining updated allocation based on traffic needs, the fixed downlink subframes would be first assigned to downlink resource needs and then the fixed uplink subframes would be first assigned to uplink resource needs. Ex. 1003, ¶253. After this, a POSITA would have understood that the scheduler will determine interference and traffic in the network and allocate the direction of the flexible subframe accordingly. Ex. 1004, ¶[0075]; Ex. 1003, ¶253.

Thus, claim element [17.6] is rendered obvious by Gaal.

**(h) [17.7]: select the first frequency spectrum resource from the shared resource pool, and schedule the first frequency spectrum resource for either the uplink channel or the downlink channel based on the determined updated directional allocation of communication resources for the base station.**

Gaal renders obvious claim element [17.7] for the reasons described above for claim element [10.8]. Given that the flexible subframes were already allocated to the shared resource pool and available for either uplink or downlink allocation, a POSITA would have understood from Gaal's disclosure that the next step is to actually schedule the subframe for the uplink or downlink based on the updated allocation. Ex. 1003, ¶256. That is, a POSITA would have understood that, as directional needs are continually and dynamically updated due to traffic and channel conditions, Gaal discloses the directional resources are scheduled for uplink or downlink transmission based on those needs. Ex. 1004, ¶[0075]; Ex. 1003, ¶256.

Thus, claim element [17.7] is rendered obvious by Gaal.

### B. Ground 2: Gaal In View of Khoryaev Renders Obvious Claims 10-13, 15, and 17 of the '361 Patent.

As discussed above in Ground 1, Gaal alone renders obvious claims 10-13, 15, and 17 of the '361 patent. However, to the extent Patent Owner argues that Gaal alone does not render obvious limitations [10.3], [10.4], [17.2] or [17.4], which recite determining that a first frequency spectrum resource is sub-optimal relative to other resources and, in response, assigning that first resource to a shared resource pool, Gaal in view of Khoryaev render obvious those limitations because the combination teaches that a subframe can be allocated from fixed to flexible in order to mitigate measured interference for that subframe.

### 1. Overview of Khoryaev

Khoryaev is directed to an improved system for handling UL-DL subframe configurations due to interference concerns. Khoryaev is concerned with the performance of "pico cells," which are small areas within a larger "macro cell." Ex. 1018, Fig. 1; Ex. 1003, ¶129. Khoryaev discloses that if a pico cell "use[s] a same UL-DL [subframe] configuration as the macro cells," this "can substantially limit the traffic adaptation capabilities of pico cell." Ex. 1018, 6:54-60. Traffic within a pico cell may have different needs than the larger macro cell, and thus a pico cell attempting to adapt to local traffic by using a different UL-DL subframe configuration can cause "inter-cell interference." *Id.*, 7:38-42; Ex. 1003, ¶129.

Khoryaev teaches that inter-cell interference issues can be resolved by (1) converting the pico subframe from fixed to flexible, and (2) muting or traffic offloading the macro subframe. *Id.*, 8:20-9:15. Khoryaev teaches that these methods "can take into account inter-cell interference from macro cells" (which is measured "using path-gains") resulting in "effective implementation of adaptive change of UL-DL configuration at pico cells." *Id.*, 7:26-35, 6:34-35; Ex. 1003, ¶129.

Thus, for example, in Figure 7 (shown below), Khoryaev teaches that in response to inter-cell interference in UL macro subframes 3, 7, and 8, those subframes can be designated as flexible subframes for the pico cell. Ex. 1018, 9:30-33; Ex. 1003, ¶130. As a result, those subframes can now be "used for the DL

transmission of the pico cells without affecting uplink performance of the macro UEs." Ex. 1018, 9:30-33. Specifically, the pico cell is no longer limited to subframes 4, 5, and 9 for downlink transmissions but now can also use subframes 3, 7 and 8. Meanwhile, "the macro UE can still serve some of the UL traffic in a remaining UL subframe #2 (using a legacy LTE UL-DL configuration)." *Id.*, 9:39-41.

**Ex. 1018, Fig. 7**

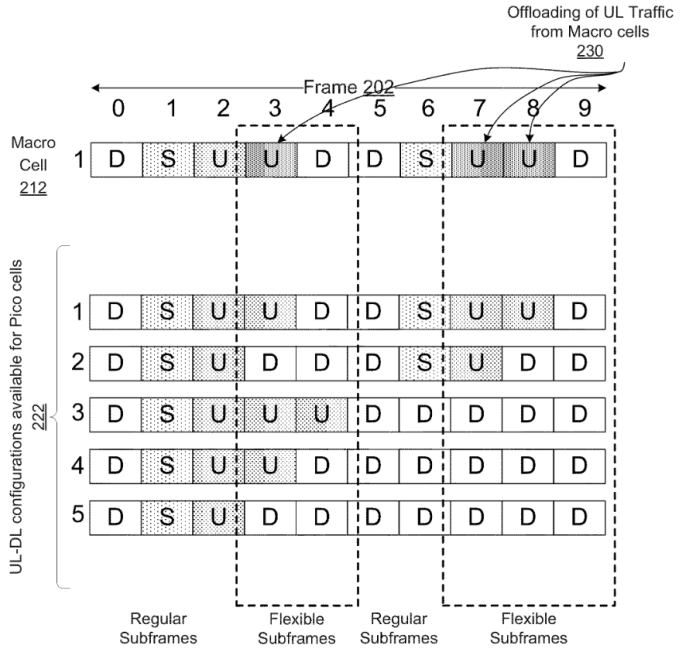


Figure 8 shows "an opposite example" where "the macro cells can restrict or mute their DL transmissions on flexible subframes #4 and 9," which results in "[t]he reduction of the DL inter-cell interference from the macro cells on those subframes 4 and 9" and "facilitate the usage of UL favored UL-DL configurations" for the pico cell, thereby "substantially improv[ing] UL packet throughput at the pico cells." *Id.*,

9:45-55; Ex. 1003, ¶131. Moreover, DL throughput is improved because those subframes are flexible. *Id.*, 9:55-58; Ex. 1003, ¶131.

**Ex. 1018, Fig. 8**

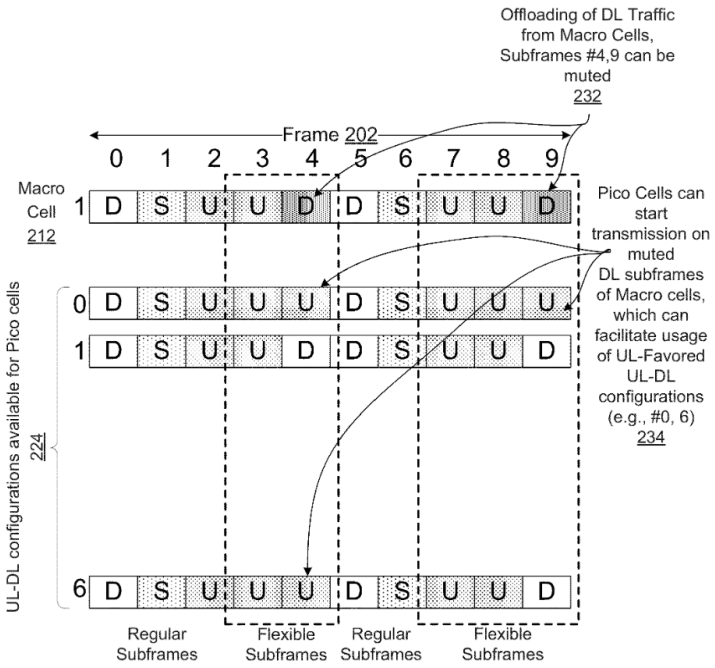


In sum, Khoryaev teaches that, upon detecting that a fixed macro subframe is resulting in inter-cell interference with a fixed pico cell subframe, the macro subframe can be muted or offloaded and the pico cell subframe can be converted to a flexible subframe, allowing the pico cell subframe to flexibly adapt to traffic. Ex. 1003, ¶132.

### 2. Motivation to Combine

A POSITA would have been motivated to combine Gaal's system of assigning subframes as fixed or flexible with Khoryaev's teachings of configuring a subframe as flexible in response to neighboring cell interference. Ex. 1003, ¶258

A POSITA would have been motivated to combine Gaal with Khoryaev with a reasonable expectation of success. Ex. 1003, ¶263. As discussed in Ground 1, Gaal discloses that subframes "may be generally categorized as 'fixed' subframes and 'flexible' (dynamic) subframes," where "[f]ixed subframes are not expected to change in a dynamic or semi-static manner," whereas "[t]he direction of flexible subframes may change in a dynamic manner," such as "due to inter-cell and/or intra-cell interference considerations." Ex. 1004, ¶[0075]. Gaal further teaches that a base station can "indicate[] to a user equipment (UE) via some signaling" that a subframe is "designat[ed]" as a "fixed subframe" or "a flexible subframe." *Id.*, ¶[0077]. For example, Gaal teaches that a base station can modify "TDD UL/DL subframe configuration 0 (DSUUUDSUUU)" to indicate to user devices that "subframes 0/1/2/5/6/7 may be fixed subframes, while subframes 3/4/8/9 may be flexible subframes." *Id.*

Gaal also teaches that the direction of a subframe may change "due to . . . interference considerations," but Gaal does not provide specific details of how subframes are selected as fixed or flexible. Ex. 1004, ¶[0075]; Ex. 1003, ¶¶259-60. Khoryaev provides additional details regarding how a subframe can be designated from fixed to flexible in response to interference considerations. Ex. 1003, ¶259. For example, as described above in Section VIII.B.1, Khoryaev discloses how a pico cell

can adapt UL-DL subframe configurations to account for inter-cell interference. *See, e.g.*, Khoryaev, 7:26-35, 6:34-35, 8:20-9:15, 9:30-55.

A POSITA would have been motivated to incorporate Khoryaev's teachings into Gaal. *First*, while Gaal teaches that (i) fixed subframes can be designated as flexible subframes and (ii) "[t]he direction of flexible subframes may change in a dynamic manner," such as "due to inter-cell and/or intra-cell interference considerations," Gaal does not specifically provide any criteria for designating a subframe as flexible. Ex. 1003, ¶259-60. A POSITA, in deciding what criteria to use when designating a fixed subframe as flexible, would have looked to Khoryaev, which teaches using a determination that a subframe is subject to inter-cell interference to designate it as flexible. *Id.*

*Second*, a POSITA would be motivated by Khoryaev's express and well-known teachings that its methods "can be used both to mitigate the impact of macro DL inter-cell interference on UL pico reception and to mitigate the impact of DL inter-cell interference from pico cells on macro UL performance." Ex. 1018, 8:20-24; Ex. 1003, ¶260. Indeed, Gaal expressly describes that "the direction of a subframe may change due to *inter-cell . . . interference* considerations," and a POSITA would be motivated to use Khoryaev's methods for designating the direction of a subframe to address such inter-cell interference considerations. Ex. 1004, ¶[0075]; Ex. 1003, ¶260.

*Third*, a POSITA would also be motivated by the fact that both Gaal and Khoryaev teach that flexible subframes are used for traffic adaptation. *See* Ex. 1004, ¶[0075]; Ex. 1018, 6:54-60; Ex. 1003, ¶261. Both Gaal and Khoryaev have similar goals of allowing flexible subframes to better adapt to specific uplink-downlink traffic. Thus, a POSITA would understand that Gaal and Khoryaev have compatible implementations—specifically, Khoryaev's teachings of assigning frames as flexible frames in consideration of inter-cell interference in order to allow for traffic adaptation is compatible with Gaal's teachings of using flexible frames for traffic adaptation. Ex. 1003, ¶261. The compatibility of Gaal and Khoryaev is also supported by Gaal's teachings of "a heterogeneous network (HetNet) that includes eNBs of different types, e.g., macro eNBs [and] pico eNBs." Ex. 1004, ¶[0037]. Khoryaev's teachings are specifically addressed to inter-cell interference between macro and pico cells. Ex. 1003, ¶261.

*Fourth*, Gaal and Khoryaev are analogous art to the '361 Patent. Ex. 1003, ¶262. All three references deal with allocation of frequency subframes within a wireless network. *See, e.g.*, Ex. 1001, Abstract ("Frequency spectrum resources ... may be allocated for either an uplink or downlink channel"); Ex. 1004, Abstract ("The method generally includes identifying, within a set of subframes, one or more flexible subframes that may be dynamically managed for either uplink or downlink communications"); Ex. 1004, ¶[0075]; *see also* Ex. 1018, Abstract ("Technology for

traffic offloading to generate a low interference flexible subframe (FlexSF) of an adaptive uplink-downlink (UL-DL) ... subframe configuration"). Both references likewise deal with eIMTA functionality. Ex. 1004, Abstract; Ex. 1018, 5:44-49.

*Fifth*, a POSITA would have had a reasonable expectation of success in combining Gaal and Khoryaev. Ex. 1003, ¶263. As mentioned above, both Gaal and Khroyaev are directed to assigning subframes within a traffic packet as flexible subframes, that is, subframes that can be used for either an uplink or a downlink. *Id.* Gaal does not expressly provide detailed criteria to use in deciding which subframes to designate as flexible, though does generally refer to "inter-cell . . . interference considerations." Ex. 1004, ¶[0075]. Khoryaev provides these missing details by teaching that, in response to determining inter-cell interference within a subframe, that subframe can be designated as flexible. Ex. 1003, ¶263. A POSITA would expect the combination to succeed because Khoryaev's teachings are straightforward and within the skill of an ordinary artisan to implement within Gaal. *Id*. Thus, because Gaal and Khoryaev are highly compatible and directed to the same goal of mitigating interference and using flexible subframes, a POSITA would have reasonably expected the combination to succeed.

### 3. Claim 10

#### (a) [10.3]: determine, based on the quality status of the first frequency spectrum resource, that the first frequency spectrum resource is a sub-optimal resource, for the uplink channel and the downlink

**channel, relative to other frequency spectrum resources that are available for use by the wireless base station; and**

Gaal in view of Koryaev renders element [10.3] obvious. The discussion of Gaal for element [10.3] is incorporated by reference. Ex. 1003, ¶¶264-66.

Further, as discussed above in Ground 1 for limitation [10.1], Gaal teaches measuring the interference of a subframe by measuring CSI-RS for each subframe, which a POSITA would understand or consider it obvious to include a Channel Quality Indicator. Ex. 1003, ¶265.

Khoryaev similarly teaches that its methods for converting a subframe to a flexible subframe "can take into account inter-cell interference from macro cells" (which is measured "using path-gains") resulting in "effective implementation of adaptive change of UL-DL configuration at pico cells." Ex. 1018, 7:26-35, 6:34-35; Ex. 1003, ¶265. Thus, Khoryaev teaches determining that a subframe is sub-optimal for the uplink and downlink channel due to measured inter-cell interference. Ex. 1003, ¶265. In the Gaal-Khoryaev combination, Gaal's use of CSI/CQI would be used to determine inter-cell interference, which Khoryaev expressly supports. *See also* Ex. 1018, 12:35-40 ("[A] user (e.g., MUE) in communication with the macro cell can monitor a link quality with the neighboring pico cells. The UE can measure a channel quality for different interference environments (*e.g.*, regular or ABS

subframes) and report a corresponding channel quality indicator (CQI) feedback for both macro and pico cells."); Ex. 1003, ¶265.

Khoryaev further teaches that it determines whether the inter-cell interference for a subframe is sub-optimal relative to the inter-cell interference for other subframes. Ex. 1003, ¶266. For example, Khoryaev describes in Figure 2 that a pico UL subframe against a macro DL subframe has significantly worse SINR than a pico UL subframe against a macro UL subframe. Ex. 1018, 5:59-6:5; *see also id.* 7:32-35, 8:20-24 (Khoryaev's methods "can be used both to mitigate the impact of macro DL inter-cell interference on UL pico reception and to mitigate the impact of DL inter-cell interference from pico cells on macro UL performance"); Ex. 1003, ¶266.

**(b) [10.4]: in response to the determination that the first frequency spectrum resource is the sub-optimal resource, assign the first frequency spectrum resource to a shared resource pool; and**

Gaal in view of Khoryaev renders element [10.4] obvious. Ex. 1003, ¶¶268-73. The discussion of Gaal for element [10.4] is incorporated by reference.

Further, Khoryaev teaches, in response to determining that a subframe's inter-cell interference is sub-optimal, assigning the subframe as a flexible subframe. Ex. 1003, ¶269. As discussed in the "Motivation to Combine" section above, Khoryaev teaches that in response to "tak[ing] into account inter-cell interference from macro cells," Khoryaev will (1) convert the pico subframe from fixed to flexible, and (2)

mute or offload traffic for the macro subframe. Ex. 1018, 7:26-35, 8:20-9:15; Ex. 1003, ¶269.

Thus, for example, in Figure 7 (shown below), Khoryaev teaches that in response to inter-cell interference in UL macro subframes 3, 7, and 8, those subframes can be designated as flexible subframes for the pico cell. Ex. 1018, 9:30-33; Ex. 1003, ¶270. As a result, those subframes can now be "used for the DL transmission of the pico cells without affecting uplink performance of the macro UEs." Ex. 1018, 9:30-33. Specifically, the pico cell is no longer limited to subframes 4, 5, and 9 for download but now also can use subframes 3, 7 and 8. Ex. 1003, ¶271. Meanwhile, "the macro UE can still serve some of the UL traffic in a remaining UL subframe #2 (using a legacy LTE UL-DL configuration)." Ex. 1018, 9:39-41.

**Ex. 1018, Fig. 7**

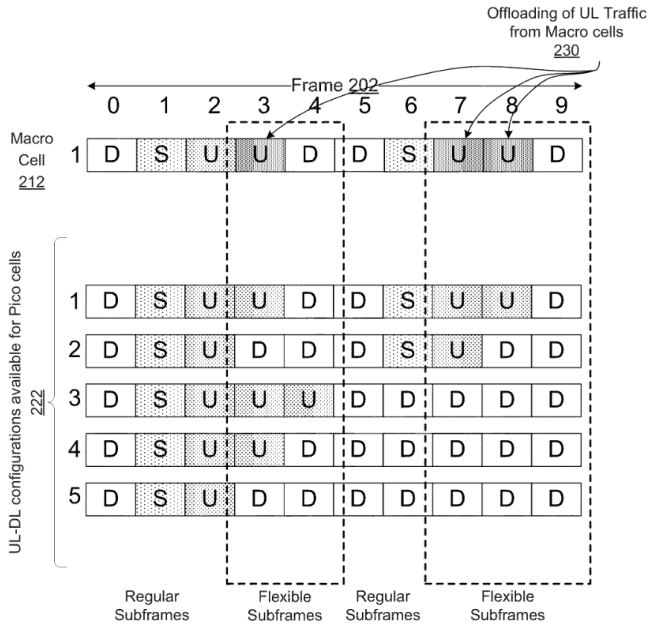

Figure 8 shows "an opposite example" where "the macro cells can restrict or mute their DL transmissions on flexible subframes #4 and 9," which results in "[t]he reduction of the DL inter-cell interference from the macro cells on those subframes 4 and 9" and "facilitate the usage of UL favored UL-DL configurations" for the pico cell, thereby "substantially improv[ing] UL packet throughput at the pico cells." Ex. 1018, 9:45-55; Ex. 1003, ¶272. Moreover, DL throughput is improved because those subframes are flexible. Ex. 1018, 9:55-58.

**Ex. 1018, Fig. 8**

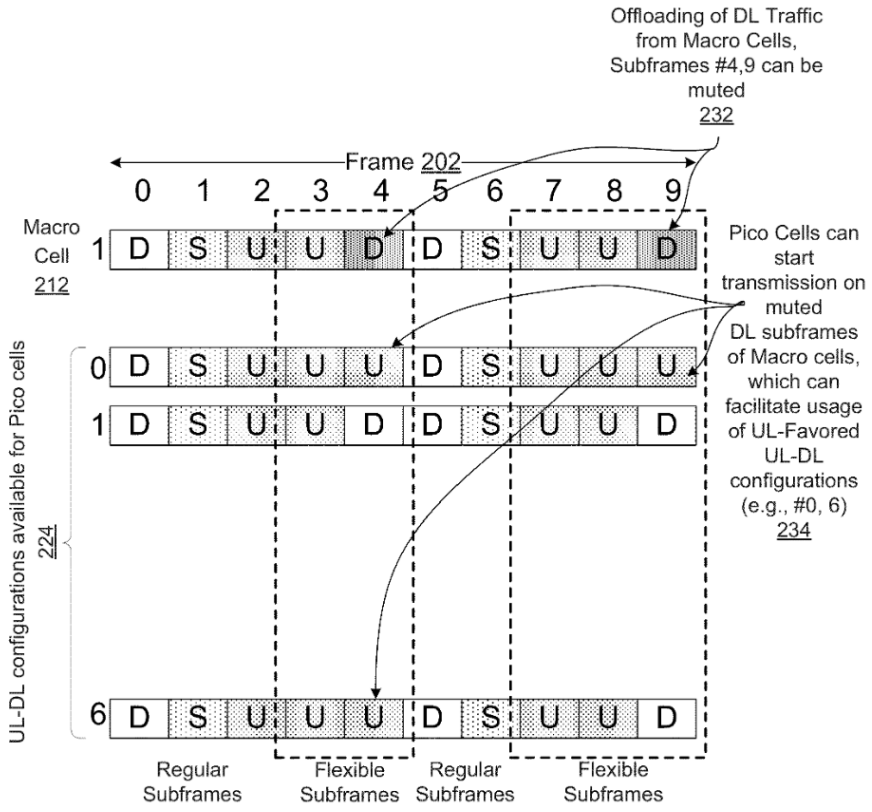


In the Gaal-Khoryaev combination, when the modified Gaal system decides whether or not to convert a fixed subframe to a flexible subframe, it will make use

of the above teachings from Khoryaev to mitigate inter-cell interference. Ex. 1003, ¶273.

As discussed above in Ground 1, a flexible subframe meets the claimed "shared resource pool."

#### 4. Claim 17

##### (a) [17.2]: determine, based on the quality status, that the first frequency spectrum resource is a sub-optimal resource, for the uplink channel and the downlink channel, relative to other frequency spectrum resources that are available for use by the base station,

The combination of Gaal and Khoryaev renders obvious claim element [17.2] for the reasons described above for claim element [10.3].

##### (b) [17.4]: in response to the determination that the first frequency spectrum resource is the sub-optimal resource, assign the first frequency spectrum resource to a shared resource pool;

The combination of Gaal and Khoryaev renders obvious claim element [17.4] for the reasons described above for claim element [10.4].

#### 5. Remaining Limitations of Claims 10, 11-13, 15, and 17

Gaal in view of Khoryaev render obvious the remaining limitations of the challenged claims for the reasons discussed above in Ground 1.

# IX. DISCRETIONARY DENIAL

## A. *Fintiv*

The six-factor *Fintiv* analysis weighs in favor of the Board declining to exercise discretionary denial. The district court has not indicated it will grant or deny a stay, and so that factor is neutral. Trial is not currently scheduled, although Jury Selection is scheduled for May 5, 2025, approximately a month before the Board's statutory deadline for a final written decision, which given the proximity weighs against denial or is at least neutral. Ex. 1020; *see SMIC Ams. V. Innovative Foundry Techs., LLC*, IPR2020-00786, Paper 10 at 20-21 (Oct. 5, 2020). Moreover, the litigation is at an early stage—Patent Owner only recently served infringement contentions and Petitioners have not yet served invalidity contentions, have produced a minimal amount of documents (indeed, a Protective Order was only entered a little over a month ago), have not deposed any witnesses, and have not begun claim construction briefing (which does not begin for another eight months). *Id.* Petitioners were also diligent in filing this Petition less than six months after it was served with the complaint. These factors weigh strongly in favor of not denying. Finally, the strong merits presented herein also weigh in favor of not exercising discretionary denial. Together, the factors weigh in favor of the Board declining to exercise its discretion to deny the petition.

### B. 35 U.S.C. §325(d)

The Board should decline to deny institution under §325(d) because the PTO has not previously considered the same or substantially the same prior art and arguments Petitioners present here. The references relied upon in this Petition were neither cited nor considered during prosecution of the ’361 Patent, nor are they duplicative of the references cited by the examiner. Thus, the Board should decline to deny institution under the discretionary authority of §325(d).

## X. MANDATORY NOTICES AND FEES

### A. Real Party-In-Interest

The real parties-in-interest for Petitioners are Samsung Electronics America, Inc and Samsung Electronics Co., Ltd. Out of an abundance of caution and to avoid additional issues associated with real parties-in-interest, Petitioners likewise identify T-Mobile USA, Inc., AT&T Services Inc., AT&T Corp., AT&T Mobility LLC, and Cellco Partnership d/b/a Verizon Wireless because Petitioners’ products are accused of infringement in their respective patent infringement actions.

### B. Related Matters

*Cobblestone Wireless, LLC v. T-Mobile USA, et al.*, No. 2:22-cv-00477 (E.D. Tex.) filed December 16, 2022

*Cobblestone Wireless, LLC v. Verizon Communications Inc., et al.*, No. 2:22-cv-00478 (E.D. Tex.) filed December 16, 2022

*Cobblestone Wireless, LLC v. AT&T Inc. et al.*, No. 2:22-cv-00474 (E.D. Tex.) filed December 15, 2022

*Cobblestone Wireless, LLC v. Samsung Electronics Co., Ltd. et al.*, No. 2:23-cv-00285 (E.D. Texas) filed June 16, 2023

*T-Mobile USA, Inc. et al. v. Cobblestone Wireless, LLC*, IPR2024-00138 (PTAB)

### C. Counsel and Service Information

Petitioners provide the following counsel and service information. Petitioners consent to electronic service the email addresses listed in the table below. Pursuant to 37 C.F.R. § 42.10(b), a Power of Attorney accompanies this Petition.

| LEAD COUNSEL | BACK-UP COUNSEL |
|---|---|
| James M. Glass (Reg. No. 46729)<br>jimglass@quinnemanuel.com<br><br>QUINN EMANUEL URQUHART & SULLIVAN, LLP<br>51 Madison Avenue, 22nd Floor<br>New York, NY 10010<br>Tel: (212) 849-7000<br>Fax: (212) 849-7100 | Quincy Lu (Reg. No. 76,954)<br>quincylu@quinnemanuel.com<br><br>QUINN EMANUEL URQUHART & SULLIVAN, LLP<br>1109 First Avenue, Suite 210<br>Seattle, WA 98101<br>Tel: (206) 905-7000<br>Fax: (206) 905-7100<br><br>Jason Williams (*pro hac vice* forthcoming)<br>jasonwiliams@quinnemanuel.com<br><br>QUINN EMANUEL URQUHART & SULLIVAN, LLP<br>51 Madison Avenue, 22nd Floor<br>New York, NY 10010<br>Tel: (212) 849-7000<br>Fax: (212) 849-7100 |

### D. Payment of Fees

The undersigned authorizes the Office to charge the fee required for this Petition for *Inter Partes* Review to Deposit Account No. 50-5708. Any additional fees that might be due are also authorized.

## XI. CONCLUSION

Petitioners request institution of an IPR and cancellation of the Challenged Claims.

Date: December 18, 2023

Respectfully submitted,

By: /s/ *James M. Glass*
James M. Glass

*Counsel for Petitioners*

## CERTIFICATE OF COMPLIANCE WITH TYPE-VOLUME LIMITATION, TYPEFACE REQUIREMENTS, AND TYPE STYLE REQUIREMENTS

1. This Petition complies with the type-volume limitation of 14,000 words, comprising 13,148 words, as counted using the Microsoft Word software that was used to prepare this paper, excluding the parts exempted by 37 C.F.R. § 42.24(a).

2. This Petition complies with the general format requirements of 37 C.F.R. § 42.6(a) and has been prepared using Microsoft® Word 2016 in 14-point Times New Roman.

Date: December 18, 2023

By: */s/ James M. Glass*

James M. Glass
QUINN EMANUEL URQUHART
& SULLIVAN, LLP
51 Madison Avenue, 22nd Floor
New York, NY 10010
Tel: (212) 849-7000
Fax: (212) 849-7100

*Counsel for Petitioners*

## CERTIFICATE OF SERVICE

The undersigned hereby certifies that on December 18, 2023, true and correct copies of the foregoing document and supporting materials were served in its entirety on the Patent Owner at the following address of record as listed on PAIR via Priority Mail Express® or Express Mail:

IP Spring - AI
161 N. Clark St.
Suite 1700
Chicago IL 60601
UNITED STATES
*Official Correspondence Address*

Courtesy copies were also sent via electronic mail to Patent Owner's counsel of record in the related district court proceeding

Reza Mirzaie, rmirzaie@raklaw.com
Marc A. Fenster, mfenster@raklaw.com
Neil A. Rubin, nrubin@raklaw.com
Christian W. Conkle, cconkle@raklaw.com
Jonathan Ma, jma@raklaw.com
Amy E. Hayden, ahayden@raklaw.com

Date: December 18, 2023

By: */s/ James M. Glass*
James Glass
QUINN EMANUEL URQUHART
& SULLIVAN, LLP
51 Madison Avenue, 22nd Floor
New York, NY 10010
Tel: (212) 849-7000
Fax: (212) 849-7100

*Counsel for Petitioners*