IN THE UNITED STATES PATENT AND TRADEMARK OFFICE

_____

BEFORE THE PATENT TRIAL AND APPEAL BOARD

_____

SAMSUNG ELECTRONICS AMERICA, INC.,

SAMSUNG ELECTRONICS CO., LTD.,

Petitioners,

v.

COBBLESTONE WIRELESS, LLC,

Patent Owner.

_____

Case No. IPR2024-00319

U.S. Patent No. 8,891,347

_____

PETITION FOR *INTER PARTES* REVIEW OF U.S. PATENT NO. 8,891,347

TABLE OF CONTENTS

I. Introduction 1

II. Standing 2

III. Identification of Challenge And Relief Requested 3

IV. Public Availability of Sesia 3

V. Level Of Ordinary Skill In The Art 6

VI. The ’347 patent 6

A. Overview 6

VII. Claim Construction 10

A. “path parameter information” 11

B. “predistorting a second signal at the transmitter in a time domain, frequency domain, and a spatial domain” 12

VIII. The Prior Art 13

A. Sesia (Ex. 1003) 13

B. Motivation to Combine 24

C. Forenza (Ex. 1014) 25

IX. Grounds of Rejection 28

A. Ground 1: Sesia 28

1. Claim 1 29

2. Claim 2 45

3. Claim 3 48

4. Claim 4 49

5. Claim 6 50

6. Claim 7 52

7. Claims 8-12, 14-17, 19-23 54

B. Ground 2: Forenza 57

1. Claim 1 57

2. Claim 2 67

3. Claim 3 67

4. Claim 4 67

5. Claim 6 68

6. Claim 7 68

7. Claims 8-12, 14-17, 19-23 68

X. Discretionary Denial 71

A. *Fintiv* 71

B. *General Plastic* 72

C. 35 U.S.C. §325(d) 73

XI. Mandatory Notices And Fees 73

A. Real Party-In-Interest 73

B. Related Matters 74

C. Counsel and Service Information 74

D. Payment of Fees 75

XII. Conclusion 75

EXHIBIT LIST

Ex.	Description
1001	U.S. Patent No. 8,891,347 to Yin
1002	Prosecution History of U.S. Patent No. 8,891,347
1003	Stefania Sesia, et al., "LTE: The UMTS Long Term Evolution from Theory to Practice," ("Sesia")
1004	Expert Declaration of Dr. Hall-Ellis as filed in IPR2024-00136
1005	Expert Declaration of Dr. Kevin Almeroth
1006	Patent Owner's Infringement Contentions against AT&T in *Cobblestone Wireless, LLC v. AT&T Inc. et al*, No. 2:22-cv-00474 (E.D. Tex.) filed December 15, 2022
1007	3GPP TSG RAN WG1 Meeting #60, R1-101217, February 22-23, 2010, San Francisco, USA, available at
1008	3GPP TSG RAN WG1 Meeting #60, R1-100926, February 22-26, 2010, San Francisco, USA, available at https://www.3gpp.org/ftp/tsg_ran/WG1_RL1/TSGR1_60/Docs
1009	Patent Owner's Infringement Contentions against T-Mobile in *Cobblestone Wireless, LLC v. T-Mobile USA, et al.* No. 2:22-cv-00477 (E.D. Tex.) filed December 16, 2022
1010	Patent Owner's Infringement Contentions against Verizon in *Cobblestone Wireless, LLC v. Verizon Communications Inc., et al.*, No. 2:22-cv-00478 (E.D. Tex.) filed December 16, 2022
1011	Docket Control Order in *Cobblestone Wireless, LLC v. T-Mobile USA, et al.* No. 2:22-cv-00477 (E.D. Tex.) (Dkt. No. 62)
1012	Katherine K. Vidal, *Interim Procedure for Discretionary Denials in AIA Post-Grant Proceedings with Parallel District Court Litigation* (June 21, 2022)

1013	Wiley Online Library listing for Sesia as of November. 22, 2023 (https://onlinelibrary.wiley.com/doi/book/10.1002/9780470978504?SeriesKey=10.1002/9780470742891)
1014	U.S. Patent No. 8,654,815 to Forenza
1015	Patent Owner's Infringement Contentions against Samsung in *Cobblestone Wireless, LLC v. Samsung Electronics America, Inc., et al.*, No. 2:23-cv-00285 (E.D. Tex.) filed June 16, 2023
1016	Amitabha Ghosh, 5G New Radio (NR): Physical Layer Overview and Performance, IEEE Communication Theory Workshop (May 15, 2018)
1017	*Cobblestone Wireless, LLC v. Samsung Electronics Co., Ltd.*, No. 2:22-cv-00285-JRG-RSP, Dkt. 29-1, Docket Control Order
1018	*Curriculum Vitae* of Dr. Kevin Almeroth

LIST OF CHALLENGED CLAIMS

Claim	Limitation
[1.0]	A method for wireless communication in a system including a transmitter, a receiver, and a plurality of propagation paths formed between the transmitter and the receiver which are capable of carrying a signal transmitted by the transmitter to the receiver, the method comprising:
[1.1]	transmitting a first signal from the transmitter to the receiver via a first propagation path of the plurality of propagation paths;
[1.2]	receiving the first signal at the receiver;
[1.3]	performing a channel estimation based on the first signal to obtain path parameter information of the first propagation path;
[1.4]	sending the channel estimation that includes the path parameter information from the receiver to the transmitter via the first propagation path;
[1.5]	predistorting a second signal at the transmitter in a time domain, a frequency domain, and a spatial domain, according to the channel estimation based on the first signal;
[1.6]	transmitting the predistorted second signal from the transmitter to the receiver via the first propagation path; and
[1.7]	receiving the predistorted second signal at the receiver.
2	The method of claim 1, wherein the path parameter information of the first propagation path includes at least one of an estimation of a delay, an estimation of a Doppler frequency, an estimation of a direction of arrival, an estimation of a direction of departure, and an estimation of a complex amplitude of the first propagation path.

Claim	Limitation
3	The method of claim 2, wherein the path parameter information of the first propagation path further includes an estimation of a polarization status of the first propagation path.
4	The method of claim 1, wherein the path parameter information is obtained by at least one estimation technique of the group consisting of a maximum-likelihood estimation algorithm, periodogram, correlatorgram, spectral-based methods, Bartlett beamformers, Capon beamformers, subspace-based techniques, MUSIC (MUltiple SIgnal Classification), ESPRIT (Estimation of Signal Parameters via Rotational Invariance Techniques), approximation of the maximum-likelihood method based on iterative schemes, SAGE (Space-Alternating Generalized Expectation-maximization), RiMAX (Richter's Maximum Likelihood method), maximum-a-posteriori based methods, Evidence Framework, Bayesian techniques, tracking algorithms, Kalman filtering techniques, enhanced Kalman filtering techniques, particle filtering techniques, and least-square-error methods.
6	The method of claim 1, further comprising equalizing the predistorted second signal at the receiver.
7	The method of claim 6, wherein equalizing the predistorted second signal is performed using a joint processing technique in a coordinated multiple-point (CoMP) system.
[8.0]	A system for wireless communication comprising:
[8.1]	a receiver;

Claim	Limitation
[8.2]	a transmitter; and
[8.3]	a plurality of propagation paths formed between the transmitter and the receiver which are capable of carrying a signal transmitted by the transmitter to the receiver,
[8.4]	wherein the receiver is configured to receive a first signal that is transmitted along a first propagation path of the plurality of propagation paths from the transmitter, perform a channel estimation based on the first signal to obtain path parameter information of the first propagation path, and send the channel estimation that includes the path parameter information to the transmitter via the first propagation path, and
[8.5]	wherein the transmitter is configured to predistort a second signal in a time domain, a frequency domain, and a spatial domain according to the channel estimation that is based on the first signal and received from the receiver and to transmit the predistorted second signal to the receiver via the first propagation path.
9	The system of claim 8, wherein the path parameter information of the first propagation path includes at least one of an estimation of a delay, an estimation of a Doppler frequency, an estimation of a direction of arrival, an estimation of a direction of departure, and an estimation of a complex amplitude of the first propagation path.
10	The system of claim 8, wherein the path parameter information of the first propagation path further includes an estimation of a polarization status of the first propagation path.

Claim	Limitation
11	The system of claim 8, wherein the path parameter information is obtained by at least one estimation technique of the group consisting of a maximum likelihood estimation algorithm, periodogram, correlatorgram, spectral-based methods, Bartlett beamformers, Capon beamformers, subspace-based techniques, MUSIC (MUltiple SIgnal Classification), ESPRIT (Estimation of Signal Parameters via Rotational Invariance Techniques), approximation of the maximum-likelihood method based on iterative schemes, SAGE (Space-Alternating Generalized Expectation-maximization), RiMAX (Richter's Maximum Likelihood method), maximum-a-posteriori based methods, Evidence Framework, Bayesian techniques, tracking algorithms, Kalman filtering techniques, enhanced Kalman filtering techniques, particle filtering techniques, and least-square-error methods.
12	The system of claim 8, wherein the transmitter and the receiver each comprise multiple antennas in a multiple-input and multiple-output (MIMO) wireless communication system or a single antenna in a single-input and single-output (SISO) wireless communication system.
14	The system of claim 8, wherein the receiver is further configured to equalize the predistorted second signal.
[15.0]	A base station for performing wireless communication with a receiver in a wireless device via a plurality of propagation paths, the base station comprising:
[15.1]	a transmitter;
[15.2]	a computing device; and

Claim	Limitation
[15.3]	a computer-readable storage medium having computer-executable instructions stored thereon that are executable by the computing device to perform operations comprising:
[15.3.1]	transmitting a first signal from the transmitter to the receiver via a first propagation path of the plurality of propagation paths;
[15.3.2]	receiving a channel estimation based on the first signal, the channel estimation including path parameter information of the first propagation path;
[15.3.3]	predistorting a second signal in a time domain, a frequency domain, and a spatial domain according to the channel estimation based on the first signal; and
[15.3.4]	transmitting the predistorted second signal from the transmitter to the receiver via the first propagation path.
16	The base station of claim 15, wherein the path parameter information of the first propagation path includes at least one of an estimation of a delay, an estimation of a Doppler frequency, an estimation of a direction of arrival, an estimation of a direction of departure, an estimation of a complex amplitude of the first propagation path, and an estimation of a polarization status of the first propagation path.
17	The base station of claim 15, wherein the transmitter comprises multiple antennas in a multiple-input and multiple-output (MIMO) wireless communication system or a single antenna in a single-input and single-output (SISO) wireless communication system.

Claim	Limitation
[19.0]	A wireless device for performing wireless communication with a base station with a transmitter via a plurality of propagation paths, the wireless device comprising:
[19.1]	a receiver;
[19.2]	a computing device; and
[19.3]	a computer-readable storage medium having computer-executable instructions stored thereon that are executable by the computing device to perform operations comprising:
[19.3.1]	receiving a first signal at the receiver via a first propagation path of the plurality of propagation paths;
[19.3.2]	performing a channel estimation based on the first signal to obtain path parameter information of the first propagation path;
[19.3.3]	sending the channel estimation that includes the path parameter information to the transmitter; and
[19.3.4]	receiving a second signal via the first propagation path, the second signal predistorted in a time domain, a frequency domain, and a spatial domain according to the channel estimation based on the first signal.
20	The wireless device of claim 19, wherein the path parameter information of the first propagation path includes at least one of an estimation of a delay, an estimation of a Doppler frequency, an estimation of a direction of arrival, an estimation of a direction of departure, and an estimation of a complex amplitude of the first propagation path.
21	The wireless device of claim 20, wherein the path parameter information of the first propagation path further includes an estimation of a polarization status of the first propagation path.

Claim	Limitation
22	The wireless device of claim 19, wherein the path parameter information is obtained by at least one estimation technique of the group consisting of a maximum likelihood estimation algorithm, periodogram, correlatorgram, spectral-based methods, Bartlett beamformers, Capon beamformers, subspace-based techniques, MUSIC (MUltiple SIgnal Classification), ESPRIT (Estimation of Signal Parameters via Rotational Invariance Techniques), approximation of the maximum-likelihood method based on iterative schemes, SAGE (Space-Alternating Generalized Expectation-maximization), RiMAX (Richter's Maximum Likelihood method), maximum-a-posteriori based methods, Evidence Framework, Bayesian techniques, tracking algorithms, Kalman filtering techniques, enhanced Kalman filtering techniques, particle filtering techniques, and least-square-error methods.
23	The wireless device of claim 19, wherein the receiver comprises multiple antennas in a multiple-input and multiple-output (MIMO) wireless communication system or a single antenna in a single-input and single-output (SISO) wireless communication system.

I. INTRODUCTION

Samsung Electronics America, Inc. and Samsung Electronics Co., Ltd. ("Petitioners") respectfully requests *inter partes review* of claims 1-4, 6-12, 14-17, and 19-23 (the "Challenged Claims") of U.S. Patent No. 8,891,347 (the "'347 Patent") pursuant to 35 U.S.C. §311 and 37 C.F.R. §42.100. Petitioners note that the first ground of challenge (but not the second) in this Petition is a "copycat" of the Petition filed in *T-Mobile USA, Inc. et al. v. Cobblestone Wireless, LLC*, IPR2024-00136 ("Carriers' Petition"). Ground 1 of this Petition and the sole ground of the Carriers' Petition challenge the same claims using the same prior art and for the same reasons. Both grounds cite to substantively identical expert testimony, and otherwise cite to the same exhibits. This Petition, however, presents a second ground of challenge that does not appear in the Carriers' Petition—challenging the same patent and claims using a different prior art reference.[1]

The '347 Patent is directed to a technique for predistorting signals at a transmitter (*e.g.*, a base station or eNodeB) based on channel estimation feedback provided by a receiver (*e.g.*, a user equipment ("UE")). According to the '347

[1] If IPR2024-00136 is instituted, Petitioners intend to move either for consolidation or joinder.

Patent, this predistortion must occur in the in a time-domain, a frequency-domain, and a spatial-domain. In the co-pending district court litigations, Patent Owner has identified the alleged infringing products as 5G cellular products capable of beamforming a wireless signal.

The problem with the ’347 Patent and Patent Owner’s allegations is that beamforming in a time-domain, a frequency-domain, and a spatial-domain was part of the prior art 4G standard, and numerous textbooks have been written describing the channel estimation and beamforming capabilities of LTE. One example is Sesia et al., “LTE: The UMTS Long Term Evolution from Theory to Practice” (“Sesia”). Forenza provides another example of beamforming multiple propagation paths using information from a training signal.

Thus the Challenged Claims are unpatentable over Sesia and over Forenza in view of the Patent Owner’s apparent interpretation of the claims. Petitioners respectfully request that the Board institutes an IPR of the Challenged Claims and cancels the Challenged Claims.

II. STANDING

Petitioners certify that the ’347 patent is available for IPR and that Petitioners are not barred or estopped from presenting the grounds identified in this Petition.

III. IDENTIFICATION OF CHALLENGE AND RELIEF REQUESTED

Petitioners request cancellation of claims 1-4, 6-12, 14-17, and 19-23 ("Challenged Claims") on the following grounds:

Ground	Reference(s)	Basis	Claims
1	Sesia	§103	1-4, 6-12, 14-17, and 19-23
2	Forenza	§103	1-4, 6-12, 14-17, and 19-23

IV. PUBLIC AVAILABILITY OF SESIA

Sesia was published by John Wiley & Sons, Inc. ("Wiley") in its "Wiley Online Library" on July 22, 2011. Exhibit 1003 is a true and correct copy of Sesia and has been compared to the eBook version of Sesia available online through the "Wiley Online Library." Ex. 1004, ¶16. As set forth in Dr. Hall-Ellis's declaration, the "Wiley Online Library" states that Sesia was "First published" on July 22, 2011. Ex. 1004, ¶18. Wiley is a well-respected and reputable academic publisher that was established in 1807 and has published millions of scholarly publications. *Id.* Sesia also bears a copyright date of 2011 and includes catalog information (such as catalog number, ISBN, and ISSN), which are established markers of a printed publication. *Id.*; *see Hulu, LLC, v. Sound View Innovations, LLC*, IPR2018-01039, Paper 29, at 19 (Dec. 20, 2019) (precedential).

Petitioners' expert Dr. Kevin Almeroth also testifies that he is familiar with the website publication practices of Wiley, including that the "First published" date listed on the Wiley Online Library website is, to a POSITA, a reliable date indicative

of its publication status. Ex. 1005, ¶69. Wiley is a "well-known, reputable compiler and publisher of scientific and technical publications, and . . . members in the scientific and technical communities who both publish and engage in research rely on information published on" Wiley's website. Ex. 1005, ¶69; *see also Ericsson Inc. v. Intellectual Ventures I LLC*, IPR2014-00527, Paper 41 at 11 (May 18, 2015) (taking "Official Notice" with respect to IEEE, a publisher with a similar reputation as Wiley); *Google LLC v. Vocalife LLC*, IPR2022-00005, Paper 10 at 21 (Apr. 15, 2022) (holding that reference is a printed publication based on indicia on the face of the reference because Wiley is an "established publisher").

Further evidence corroborates that Sesia was published on July 22, 2011, and that Exhibit 1003 is an authentic copy of Sesia as first published. *First*, the metadata for Exhibit 1003 states that the document was created on July 13, 2011, and that the date of the metadata is July 19, 2011, as shown in the "xmp:CreateDate" and "xmp:MetadataDate" from the screenshot below. Ex. 1004, ¶19; Ex. 1005, ¶69.

Ex. 1004, Figure A (Screenshot of Ex. 1003 Metadata).

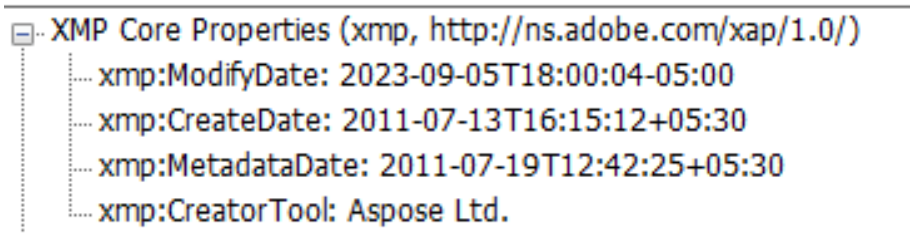

Second, the "Wiley Online Library" states that Sesia's Digital Object Identifier (DOI) is 10.1002/9780470978504, which when entered into doi.org redirects to the Wiley Online Library's webpage for Sesia. A DOI is an identifier defined by ISO 26324 used for identifying documents, especially academic papers. Ex. 1004, ¶20; Ex. 1005, ¶69. The DOI system is managed by the well-known non-profit International DOI Foundation, whose website is www.doi.org, which allows any member of the public to enter a DOI identifier to retrieve the object (usually a website URL) attached to the identifier. *Id.* A DOI can be registered using a third-party registration agency. *Id.* Sesia's DOI was registered with CrossRef, a non-profit organization that allows members to "create metadata records that identify, describe, and locate their work." *Id.* (quoting https://www.crossref.org/membership/). According to CrossRef, Sesia's DOI is for an "EDITED BOOK published 22 July 2011." *Id.* (quoting https://search.crossref.org/?from_ui=yes&q=10.1002%2F9780470978504). This further corroborates that Sesia was publicly available on July 22, 2011. *Id.*

Sesia thus was available to "persons interested and ordinarily skilled in the subject matter or art[,] exercising reasonable diligence." *See Voter Verified, Inc. v. Premier Election Sols., Inc.*, 698 F.3d 1374, 1380 (Fed. Cir. 2012) (quoting *SRI Int'l, Inc. v. Internet Sec. Sys., Inc.*, 511 F.3d 1186, 1194 (Fed. Cir. 2008)); *Jazz Pharm., Inc. v. Amneal Pharm., Inc.*, 895 F.3d 1347, 1356 (Fed. Cir. 2018); *see also* MPEP

§ 2128. Thus, Sesia qualifies as prior art under at least 35 U.S.C. § 102(a) (pre-AIA) as a printed publication which was published July 22, 2011. Ex. 1004, ¶¶17-22; Ex. 1005, ¶69.

V. LEVEL OF ORDINARY SKILL IN THE ART

A POSITA at the time of the alleged invention of the ’347 Patent would have had at least a bachelor’s degree in electrical engineering, computer engineering, computer science, physics, or the equivalent, and at least two years of experience working in the field. Ex. 1005, ¶41. Relevant working experience would include experience with cellular telecommunications and networking, radio-access network architectures, protocols, and signal propagation in wireless networks. *Id*. More education can supplement practical experience and vice versa. *Id*.

VI. THE ’347 PATENT

A. Overview

The ’347 Patent describes a pre-distortion technique for transmitting signals from a transmitter (*e.g.*, a base station or eNodeB) to a receiver (*e.g.*, UE) in a wireless communication system such as a Long-Term-Evolution (LTE) or LTE-Advanced communication system. *See* Ex. 1001, 12:54-58; Ex. 1005, ¶42.

Figure 1 of the ’347 Patent illustrates a simplified overview of a wireless communications system that comprises multiple propagation paths between a transmitter and receiver. Ex. 1001, 3:23-26, Fig. 1; Ex. 1005, ¶45, Fig. A. These propagation paths are the routes that signals may travel from the transmitter to the

receiver. Ex. 1001, 7:38-49; Ex. 1005, ¶45. The '347 Patent explains that there are multiple propagation paths due to signals scattering, diffracting, reflecting, and interacting with objects as they propagate. Ex. 1001, 3:26-30, 7:38-44; Ex. 1005, ¶45.

Ex. 1001, Fig. 1 (annotated); *see also* Ex. 1005, Fig. A.

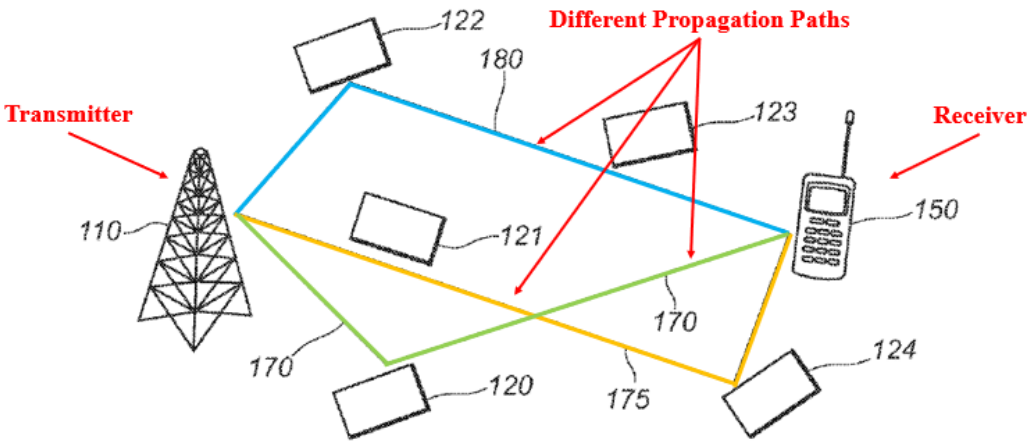

FIG. 1

The '347 Patent explains that the consequence of having multiple propagation paths is that signals will experience different delays, direction of arrival, direction of departure, and Doppler frequency shifting. Ex. 1001, 3:47-48; Ex. 1005, ¶46. Since the signals have different experiences and interactions as they propagate, the receiver does not receive the same signal on each propagation path. Ex. 1001, 3:48-50, 7:44-49; Ex. 1005, ¶46. Instead, each signal has been distorted based on the characteristics of the particular propagation path (*e.g.*, by having a different phase). Ex. 1001, 3:48-50, 7:44-49; Ex. 1005, ¶46. This distortion can cause issues at the

receiver when the receiver attempts to combine the signals. Ex. 1001, 7:44-49; Ex. 1005, ¶¶46-47. For example, the signals may destructively combine or interfere with each other which corrupts or modifies the originally transmitted signals. Ex. 1001, 3:48-50, 7:44-49; Ex. 1005, ¶¶46-47.

The ’347 Patent explains that a common prior art technique for removing distortion and phase aligning signals is channel equalization, which is performed at the receiver. Ex. 1001, 1:22-26; Ex. 1005, ¶48. Instead of using existing equalization techniques to address the distortion at the receiver, the ’347 Patent proposes a technique where transmitted signals are “pre-distorted” in such a way that they arrive at the receiver without any distortion and with the same phase. Ex. 1001, 7:63-8:3; Ex. 1005, ¶¶49-50, 54.

Figure 4 of the ’347 Patent illustrates the steps of the pre-distortion process disclosed by the ’347 Patent. Ex. 1001, Fig. 4; Ex. 1005, ¶51. The disclosed process generally involves: (i) transmitting, by a transmitter, a first signal to a receiver along a propagation path, (ii) performing, by the receiver, channel estimation on the first signal to obtain path parameter information about the propagation path, (iii) sending, by the receiver, feedback to the transmitter with the path parameter information, (iv) predistorting, by the transmitter, a second signal based on the path parameter information, (v) sending, by the transmitter, the predistorted second signal to the receiver, and (vi) receiving, by the receiver, the predistorted second signal. Ex. 1001,

8:7-9:14, Fig. 4 (below); Ex. 1005, ¶¶51-53. According to the ’347 Patent, the path parameter information may comprise information such as a delay, a Doppler frequency shift, a direction of arrival, a direction of departure, or a complex amplitude for each of the propagation paths. Ex. 1001, 8:11-16, 11:62–67; Ex. 1005, ¶¶55-56.

Ex. 1001, Fig. 4; *see also* Ex. 1005, Fig. B.

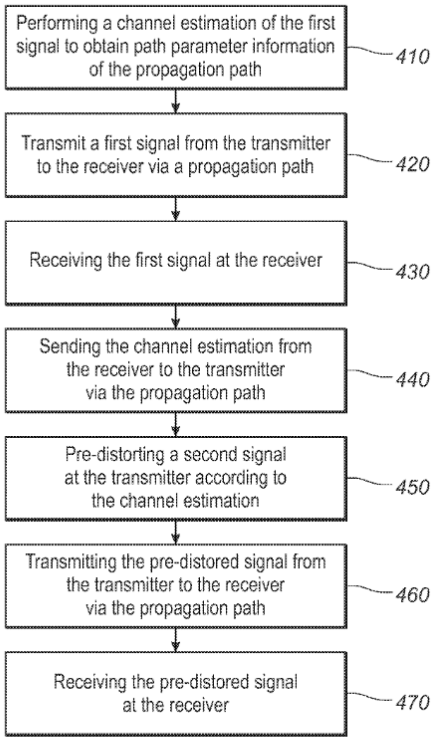

FIG. 4

VII. CLAIM CONSTRUCTION

For the purpose of this proceeding, terms not expressly construed herein should be given their ordinary and customary meaning as of the filing date of the '347 Patent. 37 C.F.R. §42.100(b); *see also Phillips v. AWH Corp.*, 415 F.3d 1303 (Fed. Cir. 2005) (*en banc*).

For purposes of this Petition, it is important to consider Patent Owner's apparent interpretation of certain terms in the co-pending district court litigations. Pursuant to 35 U.S.C. §301(a)(2) and per §301(d), the Office may consider the positions of the Patent Owner regarding infringement to determine the proper meaning of patent claims in IPR proceedings under §314. *See 10x Genomics, Inc. v. Bio-Rad Labs., Inc.*, IPR2020-00086, Paper 8 at 17-22 (PTAB Apr. 27, 2020) ("Under the circumstances of this case, the rule does not prohibit Petitioner from submitting a claim construction it believes is incorrect and relying on that construction to show how the claim is unpatentable"); *Donnelly Distribution LLC v. Russo Trading Co., Inc.*, IPR2019-00761, Paper 8, 17-18 (PTAB Sept. 6, 2019).

Here, while the Patent Owner has not formally provided proposed constructions, Patent Owner's infringement contentions indicate that Patent Owner has taken a broad interpretation of the claims that should be considered when assessing the grounds in this Petition.

A. "path parameter information"

In the co-pending district court litigation, Patent Owner interprets "path parameter information" broadly to capture any channel state information feedback, regardless of whether that channel state information is an explicit or implicit channel estimation even though the patent expressly excludes implicit estimation from path parameter information. Ex. 1006 at 7-8; Ex. 1009 at 7-8; Ex. 1010 at 7-8; Ex. 1015 at 6-7; *see also* Ex. 1001, 11:60-12:6, 14:18-21; Ex. 1005, ¶¶63-66.

For example, the Patent Owner alleges that a UE obtains path parameter information when "the UE performs link channel state estimation based on the first signal." Ex. 1006 at 7; Ex. 1009 at 7; Ex. 1010 at 7; Ex. 1015 at 6. In support, Patent Owner cites to 3GPP TS 38.300 v17.2.0 at section 5.2.5.1,[2] which explains that "for channel state estimation purposes, the UE may be configured to measure CSI-RS and estimate the downlink channel state based on the CSI-RS measurements." Ex. 1006 at 8; Ex. 1009 at 8; Ex. 1010 at 8. A POSITA would understand that these CSI-RS measurements are implicit measurements, as they are generally simplified

[2] Patent Owner cites 3GPP TS 38.200 v2.0.0, § 5.2.5.1, which is not a standard and Petitioners assume this is a typographical error. Petitioners believe that Patent Owner intended to cite section 5.2.5.1 of 3GPP TS 38.300 v17.2.0, as the copied portion in Patent Owner's infringement contentions appears to come from said section.

representations of the channel, not specific parameters such as delay, Doppler frequencies, directions of departure and directions of arrival. Ex. 1005, ¶¶63-65; *but see* Ex. 1001 at 11:60-12:6, 14:18-21. Thus, under Patent Owner's apparent interpretation, any information estimating the downlink channel state is "path parameter information," regardless of whether it is simplified, explicit, or a full-dimensional parametric description. Ex. 1001, 8:11-16, 11:62-12:6, 14:18-21; Ex. 1005, ¶66.

B. "predistorting a second signal at the transmitter in a time domain, frequency domain, and a spatial domain"

In the co-pending district court litigation, Patent Owner alleges that beamforming "predistorts" a signal in a time domain, frequency domain, and a spatial domain. Ex. 1006 at 9; Ex. 1009 at 9; Ex. 1010 at 9; Ex. 1015 at 8 ("a 5G NR signal with beamforming is a predistorted signal in time, frequency, and space."). Beamforming Patent Owner further alleges that "applicable time and frequency subcarriers are selected based on the returned CSI, and an appropriate spatial beam refinement is selected based on the returned CSI." *Id.* Furthermore, Patent Owner seems to accuse the selection of transmission resources by the base station to be a form of predistortion in the time domain and the spatial domain. Ex. 1007 at 10; Ex. 1009 at 10; Ex. 1010 at 10; Ex. 1015 at 9.

Beamforming and the selection of time and frequency resources jointly or individually are not predistortion (Ex. 1005, ¶68), but, under Patent Owner's

interpretation of this limitation, the claim is broad enough to capture resource selection and beamforming a wireless signal.

VIII. THE PRIOR ART

A. Sesia (Ex. 1003)

Sesia was published on July 22, 2011, which is before the effective filing date of the '347 Patent. Ex. 1004, ¶¶17-22; Ex. 1005, ¶69, *see also* Ex. 1013. Sesia provides a "thorough, authoritative and complete tutorial" of LTE and LTE-Advanced communications systems. Ex. 1003 at xxvii. The goal of Sesia is to provide "an explanatory course through the LTE specifications, to support those who design LTE equipment." Ex. 1003 at xxx. Sesia explains that the LTE specifications "are a record of decisions taken – decisions which are often compromises between performance and cost, theoretical possibility and practical constraints." Ex. 1003 at xxx. Sesia thus, not only describes the details of the specifications but provides detailed discussions of the "evaluations and trade-offs which lie behind the technology choices inherent in LTE." *Id.*; Ex. 1005, ¶70.

Propagation Paths in LTE. Before addressing the relevant aspects of LTE disclosed by Sesia, it is important to understand the radio environment that LTE was designed to address. Like the '347 Patent, Sesia discloses that, in communication systems, a base station (referred to as an eNodeB in LTE) communicates with one or more mobile devices or user equipment ("UE"). Ex. 1003 at 438-39; Ex. 1005,

¶¶73-76. As signals are transmitted between an eNodeB and UE, the signals propagate through the environment. Ex. 1005, ¶74. Different environments, such as rural, suburban, urban, and indoor settings, present different challenges, and thus Sesia acknowledges that LTE deployments will need to take into account the specific circumstances of each installation. Ex. 1003 at 437; Ex. 1005, ¶74. Also, the propagation of signals is impacted by the type of antenna that is used. Ex. 1003 at 438-39, 249-52; Ex. 1005, ¶74-76. For example, as shown in Figure 20.1 (below), Sesia illustrates an eNodeB with an omnidirectional antenna that transmits a signal along three different propagation paths (shown as Paths 1 (orange), 2 (blue), and 3 (green)). Ex. 1003 at 438; Ex. 1005, ¶75.

Ex. 1003 at Fig. 20.1 (annotated); *see also* Ex. 1005, Fig. C.

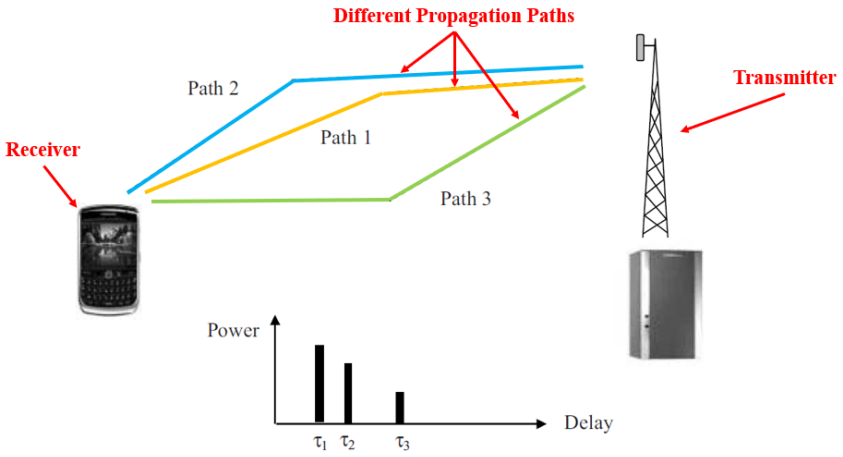

Figure 20.1: Multipath propagation and PDP.

Sesia explains that, while the signal traverses these three propagation paths to the UE receiver, the signal on each path may reach the receiver at different times

(*i.e.*, the signal is received with a different delay). Ex. 1003 at 438-39; Ex. 1005, ¶76; *see also* Ex. 1003 at 249-52, Fig. 11.2. For example, the signal on Path 3 may reach the UE before the signals on Path 1 and Path 2. Ex. 1005, ¶76. Furthermore, the characteristics of these different propagation paths may also affect signals in the frequency and space domain in addition to the time domain. Ex. 1003 at 438-39; Ex. 1005, ¶76. These different propagation paths are created by the environment. Ex. 1005, ¶76. For example, buildings, trees, cars, or other physical objects could cause interference that alter the propagation paths. Ex. 1005, ¶76.

Signaling in LTE. Sesia also explains that LTE defines the types of signals, format of signals, and timing of signals that can be transmitted in an LTE system. Ex. 1005, ¶78. For example, Sesia includes entire sections (Part 2 and Part 3) devoted to the design of transmissions in the physical layer of an LTE system. In describing the physical layer, Sesia describes the channels used for physical signal transmissions and the types of signals transmitted. Ex. 1003 at 149 & Chpt. 9; Ex. 1005, ¶79. For example, LTE defines a number of channels for transmission of data and control information to a UE. Ex. 1003 at 149 & Chpt. 9; Ex. 1005, ¶79.

One type of signal that is described in detail in Sesia is a reference signal. *See* Sesia at Chpt. 8 (titled "Reference Signals and Channel Estimation"). A reference signal is a signal with known attributes that does not carry any unknown data. Ex. 1003 at 166, 168, 651-57; Ex. 1005, ¶80. In LTE, there are five different types of

reference signals. *See e.g.*, Ex. 1003 at 167 (describing cell-specific reference signals, UE-specific reference signals, MBSFN-specific reference signals, Positioning reference signals, and Channel State Information (CSI) reference signals (CSI-RS)); Ex. 1005, ¶¶80-81. Reference signals are used in LTE to assist in the detection of signals containing data and control information. Ex. 1003 at 166, 168, 651-57; Ex. 1005, ¶¶80-81.

LTE was designed to use coherent detection of signals. Ex. 1003 at 165-66; Ex. 1005, ¶84. Coherent detection exploits knowledge of channel conditions to improve detection. Ex. 1003 at 165-66; Ex. 1005, ¶84. For example, coherent detection is able to leverage the phase and amplitude of a signal whereas non-coherent detection can only make use of the amplitude. Ex. 1003 at 165-66; Ex. 1005, ¶84. Sesia explains that "[o]ptimal reception by coherent detection therefore typically requires accurate estimation of the propagation channel," and "[a] common and simple way to estimate the channel is to exploit known signals which do not carry any data." Ex. 1003 at 165-66. Sesia further explains, that "[i]n order to estimate the channel as accurately as possible, all correlations between channel coefficients in time, frequency and space should be taken into account." *Id*. at 166. Reference signals in LTE allow a UE to perform these estimations. *Id*. at 166-67; Ex. 1005, ¶84.

Examples of reference signals that are used to perform channel estimation in LTE are the CSI-RSs and cell-specific reference signals. Ex. 1003 at 166-67; Ex. 1005, ¶81. Sesia discloses that CSI-RSs were introduced specifically for the purpose of channel estimation. Ex. 1003 at 166-67. Sesia also discloses that cell-specific reference signals can be transmitted to and used by a UE to perform channel estimation for demodulating data and deriving feedback on the quality and spatial properties of the downlink radio channel. Ex. 1003 at 651; Ex. 1005, ¶81.

Sesia further discloses that the usage of reference signals can be implemented by an eNodeB that has a single physical transmit antenna or multiple physical antenna elements. Ex. 1003 at 167; Ex. 1005, ¶85. In addition, Sesia discloses that a UE can be configured to derive a channel estimate for all data transmitted on an antenna port regardless of whether it represents a single radio channel from a physical antenna or a composite channel from multiple physical antenna elements. Ex. 1003 at 167; Ex. 1005, ¶85.

Channel Estimation using Reference Signals. Sesia then describes multiple methods of performing channel estimation, including estimations in the frequency-domain, the time-domain, and the spatial-domain. *See* Ex. 1003 at Chpt. 8.4 (discussing channel estimation based on frequency-domain characteristics.); Chpt. 8.5 (discussing channel estimation based on time-domain characteristics and explaining that the benefit of a time-domain channel estimation is the possibility to

enhance a channel estimate by exploiting its time correlation with a channel); Chpt. 8.6 (discusses channel estimation based on spatial-domain characteristics).

Sesia then discloses how a UE will report these channel estimations to an eNodeB. Sesia explains that the feedback from a UE to an eNodeB can be implicit or explicit. Ex. 1003 at 274-75, 662-63. Implicit feedback is where a UE provides a representation of the channel state information based on channel estimations (*e.g.*, a message that indicates that channel conditions are good without providing specific measurements). Ex. 1003 at 662-63; Ex. 1005, ¶¶95, 98-99. Explicit feedback, on the other hand, involves reporting the actual channel estimation measurements.[3] Ex. 1003 at 663; Ex. 1005, ¶¶95, 98-99.

For example, if a UE measures the signal-to-noise ratio and received power of a given signal in an implicit feedback system, the UE reports a representation of the measurements (*e.g.*, "signal quality 5") to show that the quality is average. Ex. 1005, ¶99. In this example, the UE makes an assumption that the base station and the UE are operating with the same coding scheme such that the base station knows how to interpret "signal quality 5" in terms the estimated channel quality. *Id*. In an

[3] While Sesia discloses these two types of feedback were possible for LTE, Sesia explains that ultimately explicit feedback was not adopted into Release 10 of the LTE 3GPP specification. Ex. 1003 at 663.

explicit channel feedback system, the UE calculates and reports an attribute of the physical channel itself such as path loss, rather than a property of the received signal alone. *Id*.

Beamforming based on channel estimations performed on reference signals. At a high level, beamforming is a method that can be utilized to improve signal strength by focusing transmitted signals in a certain direction and ideally in a certain location. Ex. 1005, ¶100. Beamforming is accomplished by utilizing constructive and destructive combinations of a signal from different closely spaced antennas transmitting multiple copies of a signal with different phases and amplitudes to focus the beam in a given direction or at a specific location. *Id*. The figure below, prepared by Dr. Almeroth, shows examples of the difference between the radiation patterns of a conventional omnidirectional radio and a radio performing beamforming (*i.e.*, directional). *Id*.

Ex. 1005, Fig. G; *see also id*. at ¶100.

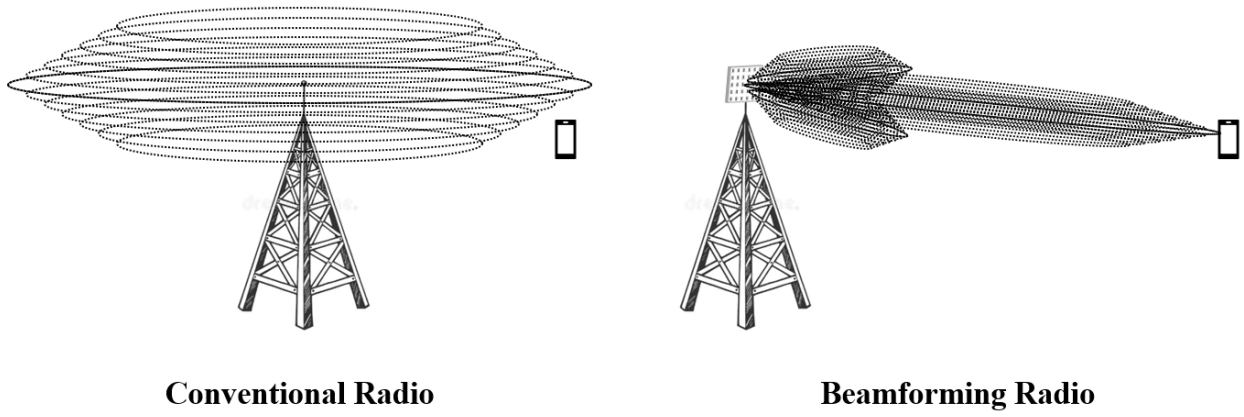

Sesia describes two possible methods for performing beamforming: (i) closed-loop rank-1 precoding and (ii) beamforming with UE-specific reference signals. Ex. 1003 at 270; Ex. 1005, ¶108.

The first type of beamforming is closed-loop rank-1 precoding. Ex. 1003 at 270-75; Ex. 1005, ¶108. Precoding is the process through which signals are adjusted based on a defined "codebook" with what is known as a "precoding matrix." Ex. 1003 at 266-68; Ex. 1005, ¶108. The precoding matrix alters the signal so that the signal is better able to exploit the channel (or path) it is sent along by applying weights that alter the signal in various ways. Ex. 1003 at 266-68, 272-74; Ex. 1005, ¶108. In closed-loop rank-1 precoding, the UE feeds channel state information (known as Precoding Matrix Indicators (PMIs)) back to the base station to indicate what precoding should be applied for beamforming. Ex. 1003 at 270. The UE determines the PMIs it reports back to the base station based on channel estimations performed on the reference signals received from the base station. *Id*. at 272-74; Ex. 1005, ¶108. Closed-loop rank-1 precoding thus uses implicit feedback of channel state information in performing beamforming. Ex. 1005, ¶¶95, 108.

The second type of beamforming is beamforming with UE-specific reference signals. This type of beamforming alters signals based on channel state information to concentrate the base station "power in the directions in which the radio channel offers the strongest path(s) to reach the UE." Ex. 1003 at 270-72; *see also* Ex. 1003

at 654 (discussing the use of channel state information reference signals); Ex. 1005, ¶¶109-10.

Beamforming based time, frequency, and space. Sesia further explains that the optimal implementation of these beamforming techniques requires that the transmitter have full channel knowledge. Ex. 1003 at 253-54. A transmitter takes into account full channel knowledge by adjusting its beamforming based on all correlations between the channel coefficients in time, frequency, and space. *Id.* at 148, 166, 253; Ex. 1005, ¶¶84, 92, 103-107. Sesia explains that this channel knowledge is based on channel state information received from the receiver using the reference signals discussed above. Ex. 1003 at 165-69, 271, 274-75, 280-81; Ex. 1005, ¶¶103, 112.

Sesia provides several examples of the types of information that can be used by an eNodeB to beamform signals. Ex. 1003 at 139, 142, 169, 178, 181, 184. For example, Sesia discloses that, when designing an OFDM system, several propagation characteristics should be considered which include expected delay spread, the maximum Doppler frequency, and cell size. Ex. 1003 at 139 and 142; Ex. 1005, ¶111. More specifically, with respect to the time-domain, Sesia discloses that the required spacing in time between the reference symbols can be determined by considering the maximum Doppler spread (highest speed) to be supported, the carrier frequency, Doppler shift, and the speed of the UE. Ex. 1003 at 169; Ex. 1005,

¶111. As another example, with respect to the frequency-domain, Sesia discloses that the spacing related to coherent bandwidth of the channel is related to channel delay spread and that, in LTE, the spacing between two reference symbols in frequency, can be determined as a function of the maximum channel delay spread. Ex. 1003 at 169; Ex. 1005, ¶111. With respect to the spatial-domain, Sesia discloses that a typical usage of UE-specific reference signals is to enable beamforming of data to specific UEs and that the eNodeB may use a correlated array of physical antenna elements to generate a narrow beam in the direction of a particular UE. Ex. 1003 at 171; Ex. 1005, ¶111. As such, Sesia discloses multiple methods for beamforming a wireless signal. Ex. 1005, ¶111.

Resource selection. In addition, Sesia explains that the channel state information obtained from the aforementioned reference signals can be used in resource selection in LTE and LTE-Advanced, including time and frequency selection. Ex. 1003 at 279-83. For example, Sesia explains that the scheduler in an eNodeB utilizes Channel Quality Information (a form of channel state information) from a UE to schedule time and frequency radio resources. Ex. 1003 at 279-81, Figure 12.2; Ex. 1005, ¶¶104-107. Thus, Sesia discloses resource selection and beamforming a wireless signal. Ex. 1005, ¶¶106-107; *see also* Ex. 1003 at 216 ("A final important aspect of link adaptation is its use in conjunction with multi-user scheduling in time and frequency, which enables the radio transmission resources to

be shared efficiently between users as the channel capacity to individual users varies. The CQI can therefore be used not only to adapt the modulation and coding rate to the channel conditions, but also for the optimization of time/frequency selective scheduling and for intercell interference management.”).

Beamforming and MIMO. In Sesia, the concept of beamforming is closely tied with that of MIMO (Multiple-Input Multiple-Output). Ex. 1003 at 249-52; Ex. 1005, ¶¶102-103. In a MIMO system, multiple antennas are used for receiving and transmitting, which increases the number of propagation paths between the receiver and transmitter. Ex. 1003 at 252-53, Fig. 11.2; Ex. 1005, ¶102. Given this added complexity, the characteristics of the propagation channel strongly influence the potential benefits from MIMO. Ex. 1003 at 251-52; Ex. 1005, ¶¶102-103. Thus, beamforming is often utilized in MIMO applications. Ex. 1003 at 249-52; Ex. 1005, ¶¶102-103, 108, 110.

As discussed above with respect to beamforming, Sesia discloses that an optimal way of communicating over a MIMO channel involves channel-dependent precoding, which fulfills the roles of both transmit beamforming and power allocation across the transmitted streams and can be achieved if the transmitter has full channel knowledge. Ex. 1003 at 148 and 253; Ex. 1005, ¶103. Again, Sesia explains that this channel knowledge is derived from feedback about the propagation path(s) from the receiver based on channel estimation performed on reference

signals. Ex. 1003 at 263-64; Ex. 1005, ¶103. In particular, Sesia discloses that a UE in LTE "can be configured to report Precoding Matrix Indicators (PMIs) and Rank Indicators (RIs), in addition to CQI [(Channel Quality Indicator)] reporting." Ex. 1003 at 272. Sesia also explains that explicit feedback (where a UE reports quantized representations of the physical channel state information) could have been used. *Id.* at 663; Ex. 1005, ¶103.

B. Motivation to Combine

A POSITA would have been motivated to combine the different sections and chapters in Sesia together with a reasonable likelihood of success. Ex. 1005, ¶114. Sesia is a collaborative work that is authored by numerous telecommunication experts that have thorough knowledge and experience with wireless communications systems. Ex. 1003 at xxvii; *see also id.* at xxiii-xxv. Furthermore, as explained above, Sesia provides a "thorough, authoritative and complete tutorial" of LTE and LTE-Advanced communications systems. Ex. 1003 at xxvii. A POSITA would thus understand that all of the different sections and chapters in Sesia are meant to be read together and to interact together as they as a whole define LTE and LTE-Advanced communications systems. Ex. 1005, ¶114. Furthermore, a POSITA would have been motivated to read all of Sesia together given it was edited together and published as a single volume that was intended to provide "an explanatory course through the LTE specifications." Ex. 1005, ¶114; Ex. 1003 at xxx. Furthermore,

given each of the chapters and sections in Sesia were chosen by the editors to provide such an explanatory course in LTE a POSITA would have had expected a reasonable likelihood of success in combining them together. Ex. 1005, ¶114. Everything in Sesia is directed to LTE and LTE-Advanced and a POSITA would have been motivated to combine the different sections and chapters in Sesia together with a reasonable likelihood of success. Ex. 1005, ¶114.

C. Forenza (Ex. 1014)

U.S. Patent No. 8,654,815 ("Forenza") discloses a similar system where a multiple antennas of a base station "work cooperatively to pre-cancel interference and create parallel non-interfering data streams to multiple users." Ex. 1014, 10:26-29; Ex. 1005, ¶¶274-78. In this embodiment, a base station "is provisioned with a number (N) of antennas" which serve "a number of Client Devices 203-207, each with a single antenna," although the embodiment also works with MIMO systems. Ex. 1014, 28:15-26. Forenza describes its system as a MIDO (multiple-in, distributed-out) or DIDO (distributed-in, distributed-out) system. Figures 4-6 of Forenza teach how the multi-antenna system transmits data to client devices.

Forenza describes that in Figure 4, "before a MIDO transmission begins, the channel is characterized." Ex. 1014, 31:4-5. This is done by transmitting a "training signal ..., one-by-one, by each of the antennas 405" of the multi-antenna base station. *Id.*, 31:6-7. Figure 4 "illustrates only the first training signal transmission, but with

three antennas 405 there are three separate [training] transmissions in total." *Id.*, 31:8-10.

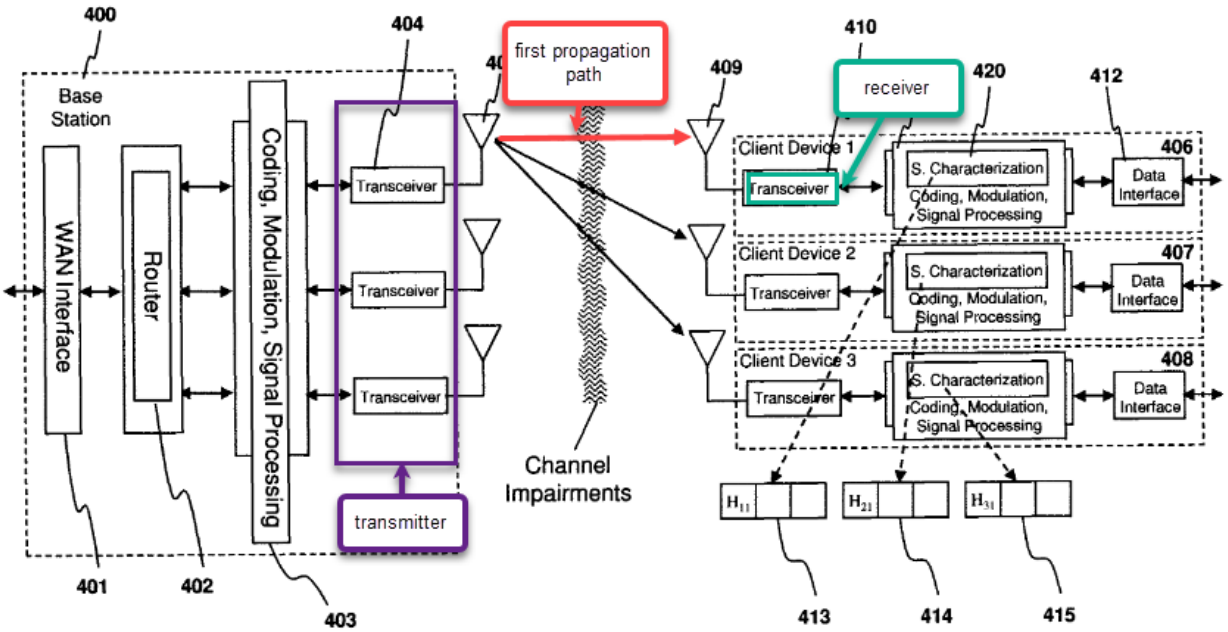

Antenna 1 Pilot Signal Transmission

Fig. 4

Each client device receives a training signal from each antenna of the transmitter. *Id.*, 31:18-20. The "[s]ignal characterization logic 320" at each client device "characterizes the resulting signal (e.g., identifying phase and amplitude distortions ...) and stores the characterization in memory," *i.e.* memory 413, 414, and 415. *Id.*, 31:23-26. The characterizations are stored as vectors labeled as H_{nm}, where n is the client device and m is the propagation path, with each client device storing "a 1x3 row 413-415 of the H matrix." *Id.*, 31:60-62. The characterizations can also include channel state information. *Id.*, 15:4-18.

As show in Figure 5, "after all three pilot transmissions are complete, each Client Device 506-508 transmits back to the Base Station 500 the 1x3 row 513-515 of matrix H that it has stored." *Id.*, 32:7-10. As the base station "receives the 1x3 row 513-515, from each Client Device 507-508, it stores it in a 3x3 H matrix 516." *Id.*, 32:27-30.

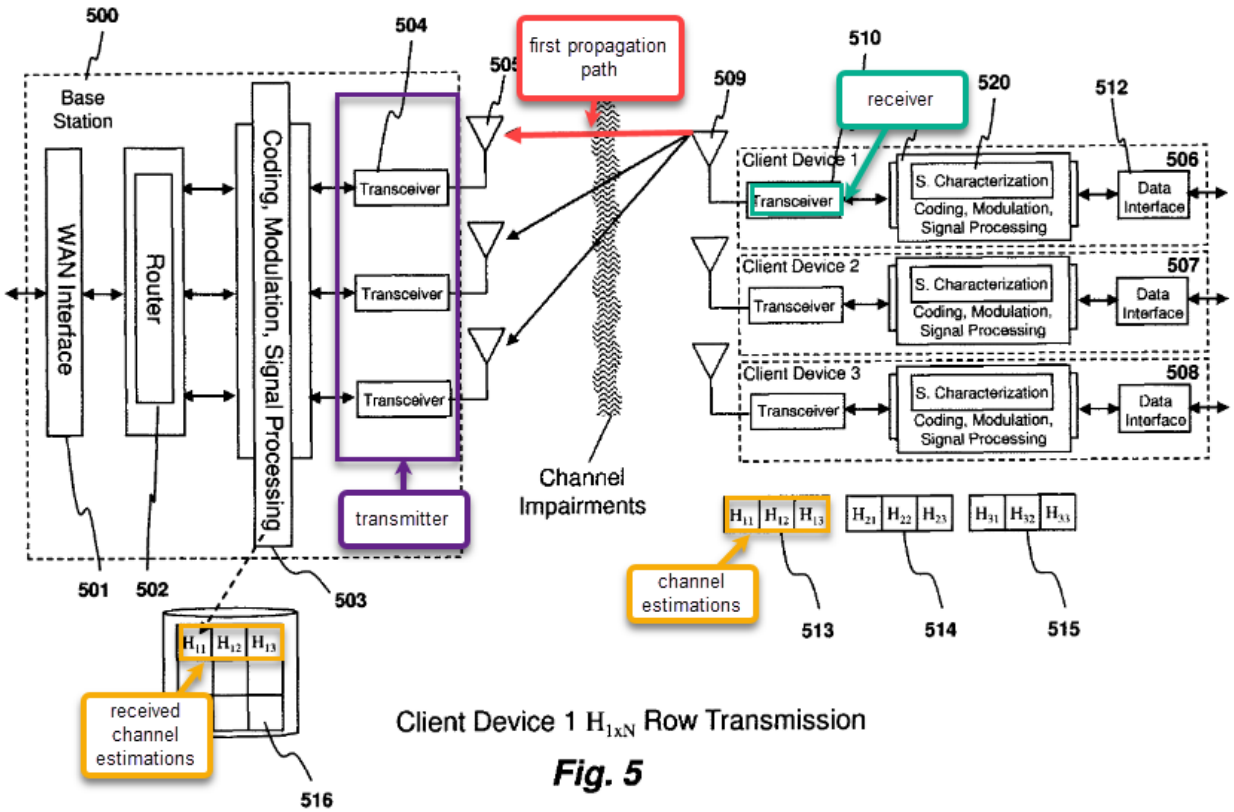

Client Device 1 H_{1xN} Row Transmission

Fig. 5

Figure 6 depicts "signal precoding logic 630 for uniquely coding the signal transmitted from each of the antennas 605 based on the signal characterization matrix 616," *i.e.* matrix H. The "precoding logic 630 multiplies the three bit streams u1-u3 in FIG. 6 by the inverse of the H matrix 616, producing three new bit streams, u'1-u'3." *Id.*, 32:65-67. These precoded bit streams are then transmitted to the client

devices, "each such bit stream is intended for one of the three Client Devices 606-608." *Id.*, 33:3-11.

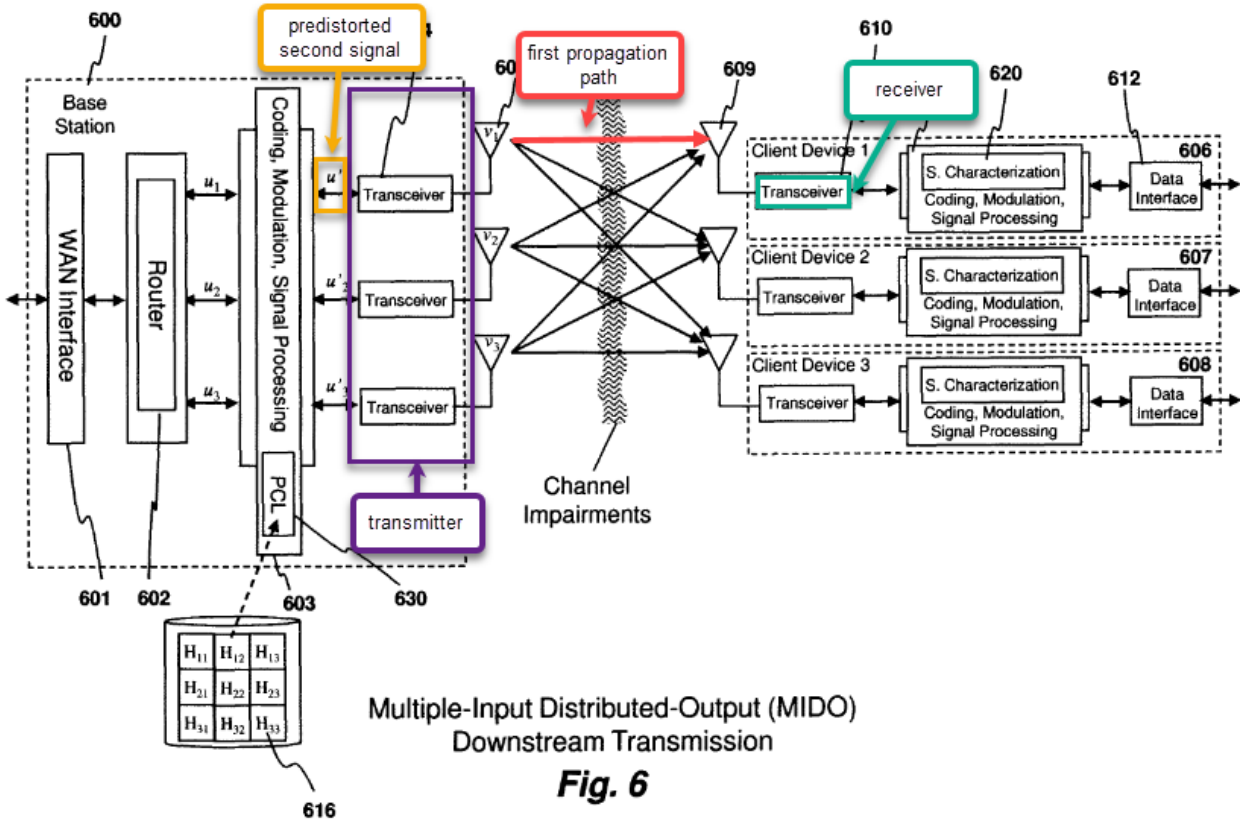

Multiple-Input Distributed-Output (MIDO) Downstream Transmission

Fig. 6

IX. GROUNDS OF REJECTION

Sesia and Forenza each render obvious claims 1-4, 6-12, 14-17, and 19-23. Ex. 1005, ¶¶115-383.

A. Ground 1: Sesia

Sesia is a book with multiple chapters. As discussed above in Section VIII.C, A POSITA would have been motivated to combine the different sections and chapters in Sesia together with a reasonable likelihood of success. Ex. 1005, ¶114.

1. Claim 1

(a) [1.0] A method for wireless communication in a system including a transmitter, a receiver, and a plurality of propagation paths formed between the transmitter and the receiver which are capable of carrying a signal transmitted by the transmitter to the receiver, the method comprising:

Sesia discloses and/or renders obvious "[a] method for wireless communication in a system including a transmitter, a receiver, and a plurality of propagation paths formed between the transmitter and the receiver which are capable of carrying a signal transmitted by the transmitter to the receiver," as recited in Claim 1. Ex. 1005, ¶¶115-17.

As described above, Sesia describes LTE communication networks that could include one or more eNodeBs and UEs. Ex. 1003 at 26, 437-39; Ex. 1005, ¶¶73-76, 116-17. In LTE, for downlink transmissions, the eNodeB (a transmitter) wirelessly transmits signals to UEs (receivers). Ex. 1003 at 438-39; Ex. 1005, ¶116. These signals are carried on a plurality of propagation paths. Ex. 1003 at 438-39; Ex. 1005, ¶116. For example, the figure below illustrates that signals can be carried by three different prorogation paths between the eNodeB and UE. Ex. 1003 at 438-39; Ex. 1005, ¶116.

Ex. 1003 at Fig. 20.1 (annotated); *see also* Ex. 1005, Fig. C.

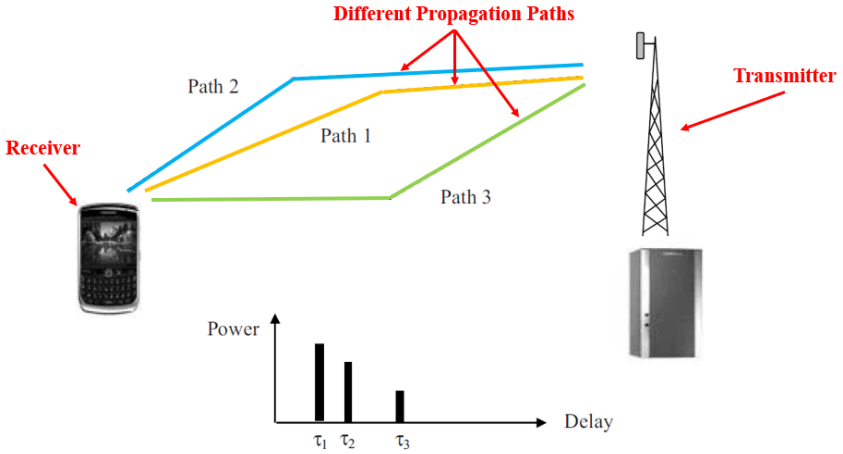

Figure 20.1: Multipath propagation and PDP.

A POSITA would thus understand that a plurality of propagation paths could be formed between the transmitter (base station) and a UE. Ex. 1005, ¶117.

Thus, Sesia discloses and/or renders obvious element 1.0 of the '347 Patent.

(b) [1.1] transmitting a first signal from the transmitter to the receiver via a first propagation path of the plurality of propagation paths;

Sesia discloses and/or renders obvious "transmitting a first signal from the transmitter to the receiver via a first propagation path of the plurality of propagation paths." Ex. 1005, ¶¶118-21.

As described with respect to element 1.0, Sesia discloses a plurality of propagation paths between an eNodeB and a UE. Furthermore, as described in Section VIII above, and incorporated herein, Sesia also discloses that a signal can be transmitted via a propagation path. Ex. 1003 at 438-39; Ex. 1005, ¶¶120-21. An

example of the type of signal that can be transmitted via the propagation path is a reference signal. Ex. 1003 at 165-68, 651-57; Ex. 1005, ¶119. As described above, LTE provides for multiple types of reference signals that can be transmitted from an eNodeB to a UE, including cell-specific reference signals, UE-specific reference signals, MBSFN-specific reference signals, Positioning reference signals, and Channel State Information (CSI) reference signals (CSI-RS). Ex. 1003 at 167; Ex. 1005, ¶119.

A POSITA would thus understand that Sesia teaches transmitting a reference signal from an eNodeB to a UE via a propagation path. Ex. 1005, ¶121. Thus, Sesia discloses and/or renders obvious "transmitting a first signal from the transmitter to the receiver via a first propagation path of the plurality of propagation paths," as recited in Claim 1.

(c) [1.2] receiving the first signal at the receiver;

Sesia discloses and/or renders obvious "receiving the first signal at the receiver." Ex. 1005, ¶¶122-23.

As discussed above with respect to claim elements [1.0] and [1.1], Sesia discloses that signals, such as reference signals, are transmitted from an eNodeB via one of the plurality of propagation paths that exist between an eNodeB and a UE. Ex. 1005, ¶123. A POSITA would understand from this disclosure that the UE receives the signal. Ex. 1003 at 167 and 651-52; Ex. 1005, ¶123. Thus, Sesia

discloses and/or renders obvious "receiving the first signal at the receiver," as recited in Claim 1.

(d) [1.3] performing a channel estimation based on the first signal to obtain path parameter information of the first propagation path;

Sesia discloses and/or renders obvious "performing a channel estimation based on the first signal to obtain path parameter information of the first propagation path." Ex. 1005, ¶¶124-37. As described above in Section VIII (which is incorporated by reference herein) and discussed below, Sesia discloses and/or renders obvious performing channel estimation on a reference signal transmitted by an eNodeB to obtain path parameter information of a propagation path.

"performing a channel estimation based on" a reference signal: For example, Sesia discloses that the eNodeB transmits a reference signal, such as a CSI-RS, to the UE to perform channel estimation for deriving feedback on the quality and spatial properties of the downlink radio channel. Ex. 1003 at 167 and 651-52; Ex. 1005, ¶125. Sesia discloses that this is possible because channel estimation attempts to describe the "channel model," which is controlled by the physical propagation characteristics of the channel (*i.e.*, the propagation path). Ex. 1003 at 174-75; Ex. 1005, ¶126-28. Sesia explains that the number of transmit and receive antennas, transmission bandwidth, carrier frequency, cell configuration, and the relative speed between the eNodeB and UE receivers all impact the physical

propagation characteristics of the channel. Ex. 1003 at 174-75; Ex. 1005, ¶127. Channel estimation is thus used to describe these physical characteristics of the channel. Ex. 1005, ¶126-28.

As discussed above in Section VIII, Sesia describes multiple methods of performing channel estimation, including channel estimations in the frequency-domain, the time-domain, and the spatial-domain. *See* Ex. 1003 at Chpts. 8.4, 8.5, 8.6; Ex. 1005, ¶129-30. For example, in Chapter 8.4, Sesia discusses performing channel estimation based on frequency-domain characteristics. Ex. 1003 at 178-81; Ex. 1005, ¶129. In Chapter 8.5, Sesia discusses performing channel estimation based on time-domain characteristics and explains that the benefit of a time-domain channel estimation is the possibility to enhance a channel estimate by exploiting its time correlation with a channel. Ex. 1003 at 181-84; Ex. 1005, ¶129. In the next section, Section 8.6, Sesia discusses performing channel estimation based on spatial-domain characteristics. Ex. 1003 at 184-85; Ex. 1005, ¶129. Furthermore, Sesia explains that in order to estimate the channel as accurately as possible that all of the above methodologies should be utilized when performing channel estimation. *See* Ex. 1003 at 166 ("In order to estimate the channel as accurately as possible, all correlations between channel coefficients in time, frequency and space should be taken into account.").

Sesia therefore discloses performing channel estimation on a reference signal.

"obtain path parameter information" from the channel estimation: Sesia identifies multiple types of feedback information that can be determined from the aforementioned reference signals and relayed to the base station, including: Precoding Matrix Indicators ("PMIs"), Rank Indicators ("RIs"), and CQI reporting. Ex. 1003 at 272, 167. As discussed above, Sesia explains that the path parameter information that is determined from the channel estimation can be provided as either implicit feedback or explicit feedback. Ex. 1003 at 274-75, 663; Ex. 1005, ¶132.

For example, Sesia discloses that one type of feedback that the UE can send to the eNodeB based on the channel estimation is the Precoding Matrix Indicator (PMI). Ex. 1003 at 272-74; Ex. 1005, ¶133. PMI is a form of implicit feedback because PMI is selected based on a hypothesis regarding the precoding that the eNodeB should use for transmissions along the propagation path. Ex. 1003 at 274-75, 662; Ex. 1005, ¶133. Furthermore, PMI is a form of implicit feedback because "it provides an implicit representation of the channel consisting of an indication of the data rate that could be achieved if the eNodeB used a certain precoder." Ex. 1003 at 662; Ex. 1005, ¶133. In other words, PMI is not an explicit quantized measurement, but rather a representative number that informs the eNodeB what could be achieved if a certain precoding matrix is used. Ex. 1005, ¶133.

As another example, Sesia discloses that the UE could also provide explicit feedback. Ex. 1003 at 662-63; Ex. 1005, ¶134. Explicit feedback involves reporting

a quantized representation of the physical channel state information. Ex. 1003 at 662-63; Ex. 1005, ¶134. In other words, explicit feedback involves reporting the actual channel estimation measurements as opposed to other measurements which may be used to imply the channel indirectly. Ex. 1003 at 662-63; Ex. 1005, ¶134. As a result, explicit feedback does not rely on any assumptions about the eNodeB such as what codebook the precoder in the eNodeB is utilizing. Ex. 1003 at 662-63; Ex. 1005, ¶134.

Based on Sesia's disclosure, a POSITA would understand, under Patent Owner's apparent interpretation of the claims, that the information that is obtained from performing channel estimation on a reference signal and subsequently provided to the eNodeB by the UE as either implicit or explicit feedback corresponds with the claimed "path parameter information." Ex. 1005, ¶¶135. Furthermore, under Patent Owner's apparent interpretation of the claims, based on Sesia's disclosure, a POSITA would understand that this information is "path parameter information of the first propagation path" given that channel estimation attempts to define the channel model of a propagation path. Ex. 1005, ¶135.

Notably, as explained above, in Patent Owner's infringement contentions, Patent Owner identified the "path parameter information" as channel state information measured from the CSI-RS. As discussed above, Sesia discloses the same measurements for the same reference signal.

Thus, Sesia discloses and/or renders obvious "performing a channel estimation based on the first signal to obtain path parameter information of the first propagation path," as recited in Claim 1 under either Patent Owner's apparent interpretation or the plain and ordinary meaning of the term.

(e) [1.4] sending the channel estimation that includes the path parameter information from the receiver to the transmitter via the first propagation path;

Sesia discloses and/or renders obvious "sending the channel estimation that includes the path parameter information from the receiver to the transmitter via the first propagation path." Ex. 1005, ¶¶138-45.

As discussed above with respect to claim element [1.3], Sesia discloses performing a channel estimate on a reference signal to obtain channel estimate information or path parameter information, which is then provided to the transmitter (*i.e.*, the base station) as feedback (either explicit or implicit). Ex. 1003 at 271-72 and 662-63; Ex. 1005, ¶139.

In addition, Dr. Almeroth explains that Sesia provides examples where the channel state information is transmitted to the eNodeB as feedback (either explicitly or implicitly) for subsequent data scheduling and transmissions. Ex. 1005, ¶140. As an example, Sesia discloses that a UE may transmit a Channel Quality Indicator (CQI) as feedback to an eNodeB, which is then used by the eNodeB for selecting a modulation scheme and/or code rate. Ex. 1003 at 215; Ex. 1005, ¶140. In another

example, Sesia discloses that the UE may provide channel state information for transmit beamforming and MIMO precoding. Ex. 1003 at 263; Ex. 1005, ¶140. In yet another example, Sesia discloses the UE may provide PMI feedback to the eNodeB to help the eNodeB with deriving beamforming precoding weights. Ex. 1003 at 271-72; Ex. 1005, ¶140. Sesia also discloses that the scheduling algorithms used by the eNodeB can make use of measurement information which can include Channel State Information (CSI) and traffic measures (*e.g.*, volume and priority). Ex. 1003 at 280; Ex. 1005, ¶141.

Each of these disclosures show how channel estimation information is sent from the receiver to the transmitter after the receiver performs channel estimation for use in subsequent transmissions. Ex. 1005, ¶142. Furthermore, Sesia explicitly states that the "LTE specifications are designed to provide signaling necessary for the interoperability between the eNodeB and UEs so that the eNodeB can optimize the link adaptation." Ex. 1003 at 215-16. As such, a POSITA would understand that the channel estimates are necessarily sent back to the base stations. Ex. 1005, ¶¶142-43.

In addition, Sesia discloses the use of a time division duplexing (TDD) scheme in wireless communications. *See* Ex. 1003 at 147, Figure 6.2; Ex. 1005, ¶144. In said TDD schemes, signals are transmitted at the same frequencies meaning that the uplink signals from the UE are sent using the same frequencies along the

same path as the first sent downlink reference signals. *See* Ex. 1003 at 147, Figure 6.2; Ex. 1005, ¶144. As such, a POSITA would understand that the alleged channel estimates are sent along the same path by reciprocity.[4] *See* Ex. 1005, ¶144.

Accordingly, a POSITA would understand Sesia to disclose that, after obtaining the channel estimate information or path parameter information, the UE transmits a signal, including the channel estimate information to the eNodeB along the propagation path that exists between the transmitter and the receiver. Ex. 1005, ¶145.

Thus, Sesia discloses and/or renders obvious "sending the channel estimation that includes the path parameter information from the receiver to the transmitter via the first propagation path," as recited in Claim 1.

(f) [1.5] predistorting a second signal at the transmitter in a time domain, a frequency domain, and a spatial domain, according to the channel estimation based on the first signal;

[4] This reciprocity concept is similar to what the Patent Owner is currently pointing to in its infringement contentions in the related district court proceedings. Ex. 1007 at 8 ("In at least TDD mode . . . the uplink transmission uses the same propagation path (***via reciprocity***) as the downlink transmission.") (emphasis added); *see also* Ex. 1009 at 8; Ex. 1010 at 8.

Sesia discloses and/or renders obvious "predistorting a second signal at the transmitter in a time domain, a frequency domain, and a spatial domain, according to the channel estimation based on the first signal" in light of Patent Owner's apparent interpretation of this limitation based on its infringement contentions in the related District Court proceedings. Ex. 1005, ¶¶146-59. As discussed above, Patent Owner interprets "predistorting a second signal at the transmitter in a time domain, a frequency domain, and a spatial domain" as broad enough to include beamforming a wireless signal and/or scheduling of transmission resources in the time and frequency domains.

As described above in Section VIII, and incorporated by reference herein, Sesia discloses multiple methods of beamforming a wireless signal based on path parameter information obtained from reference signals. For example, Sesia describes two methods of performing beamforming: (i) closed-loop rank-1 precoding and (ii) beamforming with UE-specific reference signals. Ex. 1003 at 270; Ex. 1005, ¶147. Sesia also discloses beamforming in a time domain, a frequency domain, and a spatial domain, as well as scheduling of the resources utilized for beamforming in the time and frequency domain. Ex. 1005, ¶147.

Beamforming using closed-loop rank-1 precoding according to the channel state information. In closed-loop rank-1 precoding, the UE feeds channel state information (known as Precoding Matrix Indicators (PMIs)) back to the base station

to indicate what precoding should be applied for beamforming. Ex. 1003 at 270; Ex. 1005, ¶148. The UE determines the PMIs it reports back to the base station based on channel estimations performed on the reference signals received from the base station. Ex. 1003 at 272-74; Ex. 1005, ¶148. This precoding is a form of beamforming. Ex. 1003 at 270-75; Ex. 1005, ¶148. Thus, Sesia discloses beamforming a wireless signal based on CSI reported from the UE (*e.g.*, the PMI reported values, as well as the CQI and RI reported values). Ex. 1005, ¶148.

Beamforming with UE-specific reference signals according to the channel state information. Beamforming with UE-specific reference signals functions by utilizing channel state information to alter signals so as to concentrate the base station "power in the directions in which the radio channel offers the strongest path(s) to reach the UE." Ex. 1003 at 270-72; Ex. 1005, ¶149. As such, Sesia discloses beamforming a wireless signal based on CSI reported from the UE. Ex. 1005, ¶149.

Beamforming in a time domain, a frequency domain, and a spatial domain. Sesia further explains that beamforming using either of these techniques is optimally implemented if the transmitter has full channel knowledge. Ex. 1003 at 249-50, 253-54; Ex. 1005, ¶150. For example, one context in which optimally implementing beamforming with full channel knowledge is required involves communicating over

a MIMO channel, which requires beamforming using full channel knowledge. Ex. 1003 at 253-54; Ex. 1005, ¶150.

As explain above in Section VIII and incorporated herein, full channel knowledge requires that all correlations between the channel coefficients in time, frequency, and space should be taken into account. Ex. 1003 at 148, 166, 253; Ex. 1005, ¶153. Sesia explains that this channel knowledge is based on channel state information determined through channel estimation based on the reference signals sent by the base station. Ex. 1003 at 165-69, 271, 274-75, 280-81; Ex. 1005, ¶151-52. For example, Sesia discloses that a UE in LTE "can be configured to report Precoding Matrix Indicators (PMIs) and Rank Indicators (RIs), in addition to CQI [(Channel Quality Indicator)] reporting." Ex. 1003 at 272. Sesia also explains that explicit feedback (where a UE reports quantized representations of the physical channel state information) could have been used. Ex. 1003 at 663; Ex. 1005, ¶151.

Furthermore, as explained above, Sesia provides several examples of the types of information that can be determined to help provide the eNodeB with the full channel knowledge required to beamform signals optimally. Ex. 1003 at 139, 142, 169, 178, 181, 184; Ex. 1005, ¶152. For example, with respect to the time-domain, Sesia discloses that the Doppler spread, the carrier frequency, Doppler shift, and the speed of the UE can be determined. Ex. 1003 at 169; Ex. 1005, ¶152. As another example, with respect to the frequency-domain, Sesia discloses that channel delay

spread and maximum channel delay spread can be determined. Ex. 1003 at 169; Ex. 1005, ¶152. With respect to the spatial-domain, Sesia discloses that a correlated array of physical antenna elements can be used to generate a narrow beam in the direction of a particular UE. Ex. 1003 at 171; Ex. 1005, ¶152. A POSITA would understand that these parameters could be used in some manner to assist in beamforming a wireless signal. Ex. 1005, ¶152. Furthermore, a POSITA would have a reasonable likelihood of success in doing so, as Sesia itself discloses that explicit feedback was considered in addition to implicit feedback and that the two feedback schemes were found to have similar results. Ex. 1003 at 662–63; Ex. 1005, ¶152.

A POSITA would thus readily appreciate that an eNodeB can be configured to "predistort" (or "beamform" as Patent Owner interprets the limitation) signals in the frequency-domain, the time-domain, and the spatial-domain based on feedback (*i.e.*, channel state information or path parameter information) that is provided by the receiver. Ex. 1005, ¶154.

Furthermore, to the extent the Patent Owner is asserting that the scheduling of transmission resources for use with beamforming comprises the predistortion in the time and frequency domains, as discussed above in Section VII.A., Sesia discloses the use of a scheduler to select the transmission resources in time and frequency for use with beamforming based upon the fed back channel state information such as CQI. Ex. 1003 at 279-83, Figure 12.2; Ex. 1005, ¶155-59.

As such, a POSITA would understand Sesia to disclose transmitting a signal on applicable time and frequency subcarriers based on channel state information, and an appropriate spatial beam refinement based on said channel stated information, which according to the Patent Owner, in the related district court proceedings, meets this limitation. *See* Exhibit 1007 at 9 ("For example, a 5G NR signal with beamforming is a predistorted signal in time, frequency, and space. For example, applicable time and frequency subcarriers are selected based on the returned CSI, and an appropriate spatial beam refinement is selected based on the returned CSI."); *see also* Ex. 1009 at 9; Ex. 1010 at 9. Thus, Sesia discloses and/or renders obvious "predistorting a second signal at the transmitter in a time domain, a frequency domain, and a spatial domain, according to the channel estimation based on the first signal," as recited in Claim 1 under Patent Owner's apparent interpretation of the claims which is broad enough to capture beamforming a wireless signal.

(g) [1.6] transmitting the predistorted second signal from the transmitter to the receiver via the first propagation path;

Sesia discloses and/or renders obvious "transmitting the predistorted second signal from the transmitter to the receiver via the first propagation path." Ex. 1005, ¶¶160-66.

As discussed above with respect to claim element [1.0], Sesia discloses that signals transmitted from the transmitter to the receiver are transmitted along the

propagation paths that exist between the transmitter and the receiver. Ex. 1005, ¶¶162-64. Given the predistorted signal is received by the receiver, it must have been transmitted along one of the propagation paths (*i.e.*, the first propagation path, the path on which the first reference signal was sent), or else the signal would not have been received. *Id*. at ¶164. As such, a POSITA would understand that the predistorted second signal is sent to the receiver by the transmitter along at least one of the same propagation paths (*i.e.*, the first propagation path) that exist between the transmitter and the receiver on which the receiver previously performed channel estimation. *Id*. at ¶164.

Furthermore, as explained by Dr. Almeroth, it would have been obvious to a POSITA that the "predistorted second signal" is transmitted from the transmitter to the receiver via the same "first propagation path," particularly in a non-MIMO environment. Ex. 1005, ¶165. A POSITA would understand that one of the purposes of beamforming is to steer the transmission beam to maximize a given UE's signal. Ex. 1005, ¶165. Furthermore, as explained above for element [1.5], one method to accomplish this is to measure the path parameters for that specific path and report them to the base station, which can then perform beamforming to direct the signals. Ex. 1005, ¶165. A POSITA would have known then that these beamformed signals would travel along the same first propagation path, otherwise the channel estimates would no longer apply, and the beamforming would be ineffective. Ex. 1005, ¶165.

In this case, Dr. Almeroth explains that the second predistorted signal is transmitted by the transmitter to the receiver along the propagation paths that exist between the transmitter and the receiver. Ex. 1005, ¶¶160-66.

Thus, Sesia discloses and/or renders obvious "transmitting the predistorted second signal from the transmitter to the receiver via the first propagation path," as recited in Claim 1.

(h) [1.7] receiving the predistorted second signal at the receiver.

Sesia discloses and/or renders obvious "receiving the predistorted second signal at the receiver." Ex. 1005, ¶¶167-70.

As discussed above with respect to claim elements [1.0] and [1.6], Sesia discloses that signals transmitted from the transmitter to the receiver are transmitted along the propagation paths that exist between the transmitter and the receiver. Ex. 1005, ¶169. In this case, Dr. Almeroth explains the receiver receives the predistorted second signal that is transmitted by the transmitter via the propagation paths that exist between the transmitter and the receiver. Ex. 1005, ¶169.

Thus, Sesia discloses and/or renders obvious "receiving the predistorted second signal at the receiver," as recited in Claim 1.

2. Claim 2

Sesia discloses this limitation. Ex. 1005, ¶¶171-78. As discussed above in Section IX.A.1 with respect to claim element [1.3], Sesia discloses that channel

estimations are made to obtain path parameter information of the first propagation path. Ex. 1003 at 166; Ex. 1005, ¶172. Sesia also explicitly discloses the path parameter information recited in Claim 2. Ex. 1005, ¶173.

For example, with regards to "an estimation of delay," Sesia discloses that a phase shift corresponds with a time delay spread in the time-domain and that "expected delay spread" is one of the main propagation characteristics that should be taken into account. Ex. 1003 at 135-36, 139, 142; Ex. 1005, ¶173. A POSITA would understand that Sesia's expected delay spread corresponds with the claimed "estimation of delay." Ex. 1005, ¶173.

With regards to "an estimation of a Doppler frequency," Sesia discloses that "Doppler frequency" is one of the main propagation characteristics that should be taken into account. Ex. 1003 at 139, 142; Ex. 1005, ¶174. Sesia also discloses that the channel estimation process can determine a frequency error due to Doppler based on the relative speed between the transmitter and the receiver, and that the Doppler spread can be used for determining spacings between symbols in the frequency-domain. Ex. 1003 at 134 and 169; Ex. 1005, ¶174. A POSITA would thus that Sesia discloses "estimation of a Doppler frequency." Ex. 1005, ¶174.

With regard to "an estimation of a direction of arrival," Sesia discloses that the eNodeB uses spatial parameter information such as Angle of Arrival and a Direction of Arrival estimations for beamforming. Ex. 1003 at 271, 445, 447, 450;

Ex. 1005, ¶175. As shown below in Figure 20.2, Figure 20.2 illustrates Sesia's Angle of Arrival (shown as AoA) and a Direction of Arrival. Ex. 1003 at 443; Ex. 1005, ¶175; *see also* Ex. 1003 at 445, 447, 450. A POSITA would thus understand that Sesia's Direction of Arrival and Angle of Arrival correspond with the claimed "estimation of a direction of arrival." Ex. 1005, ¶175.

Ex. 1003 at Fig. 20.2; *see also* Ex. 1005, Fig. I.

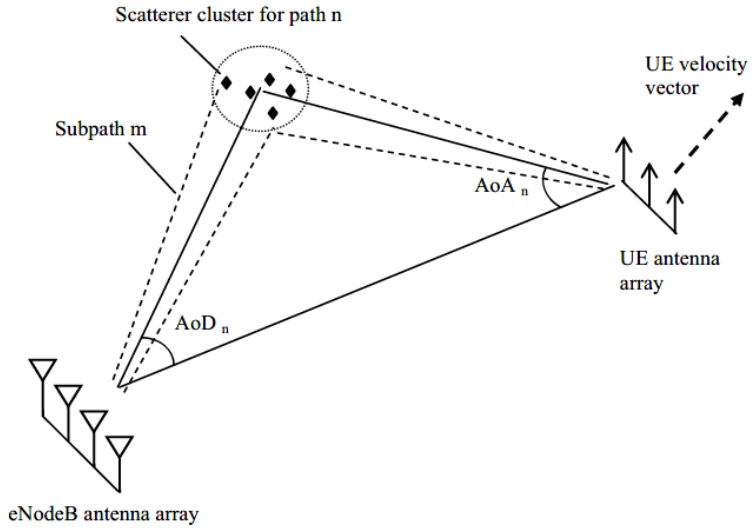

Figure 20.2: Geometry for generating spatial parameters for base station and UE.

With regards to "an estimation of a direction of departure," Sesia also discloses spatial parameters such as an Angle of Departure. Ex. 1003 at 443, 445, 447, 450; Ex. 1005, ¶176. As shown in Figure 20.2 above, Figure 20.2 also illustrates Sesia's Angle of Departure (shown as AoD). Ex. 1003 at 443; Ex. 1005, ¶176. A POSITA would thus understand that Sesia's Angle of Departure corresponds with the claimed "estimation of a direction of departure." Ex. 1005, ¶176.

With regards to "an estimation of complex amplitude," Sesia discloses that certain link control methods use amplitude information from the channel. Ex. 1003 at 496-97; Ex. 1005, ¶177. Sesia provides several examples of equations that include complex amplitude estimates and weights. Ex. 1003 at 496-97; Ex. 1005, ¶177. A POSITA would thus understand that Sesia's examples of complex amplitude estimates and weights correspond with the claimed "estimation of a complex amplitude of the first propagation path." Ex. 1005, ¶177.

3. Claim 3

Sesia discloses this limitation. Ex. 1005, ¶¶179-84. Sesia discloses that eNodeBs and UEs may be configured with cross-polarized or orthogonally-polarized antennas. Ex. 1003 at 446-47; Ex. 1005, ¶180, Fig. J, Fig. K. Accordingly, Sesia discloses that an estimation of polarization status can be calculated by the UE. Ex. 1003 at 446-47 (disclosing that polarization covariance matrices can be determined based on antenna polarizations), Table 29.3 (illustrating an example of how polarization information can be used in conjunction with the feedback that is provided by the receiver to the eNodeB); Ex. 1005, ¶¶180-82, Fig. J, Fig. K, Fig. L.

In light of Sesia's discussion of antenna polarization, polarization estimation, and the potential uses of polarization information, Dr. Almeroth thus concludes that a POSITA would readily appreciate that Sesia's channel estimation process and channel estimation information feedback may consider and include polarization

information, such as the claimed "polarization status," for cross-polarized or orthogonally-polarized antennas. Ex. 1005, ¶183.

4. Claim 4

Sesia discloses this limitation. Ex. 1005, ¶¶185-90. As a preliminary matter, the estimation techniques recited in Claim 4 are Applicant admitted prior art. Ex. 1005, ¶189 The '347 Patent acknowledges that these techniques were well-known and commonly used for channel estimation. *See* Ex. 1001 at 8:17-67; *see also* Ex. 1005, ¶189.

In addition, Sesia discloses many of the techniques and algorithms recited in Claim 4. Ex. 1003 at 178-85 and 225; Ex. 1005, ¶187. For example, Sesia discloses linear interpolation, Bayesian techniques, least-squares (LS) error methods, regularized LS error methods, minimum mean-squared error (MMSE), mismatched MMSE, simple interpolator, Fast Fourier Transformation (FFT), Inverse Fast Fourier Transformation (IFFT), spectral-based methods, time-domain MMSE, normalized least-mean-squares (NLMS), Kalman filtering techniques, maximum-likelihood estimation, and maximum-a-posteriori based methods. Ex. 1003 at 178-85 and 225; Ex. 1005, ¶¶187-88. As Dr. Almeroth explains, a POSITA would have understood that any of these potential methods could be used for channel estimation. Moreover, Dr. Almeroth explains that all of the methods identified in claim 4 were known to a POSITA, and a POSITA would have known that these methods could be

used for channel estimation and would have yielded predictable results. Ex. 1005, ¶189.

5. Claim 6

Sesia discloses this limitation. Ex. 1005, ¶¶191-94. Performing equalization of a signal at the receiver is Applicant admitted prior art. In the background section of the ’347 Patent, the ’347 Patent explicitly discloses the usage of equalization techniques at the receiver and identifies several examples of existing equalization techniques. Ex. 1001 at 1:22-37; *see also* Ex. 1005, ¶43.

In addition, Sesia discloses several examples of receiver operations that include equalization. Ex. 1005, ¶¶192-93. For example, as shown in Figures 21,2 and 21.3 below, the receiver is configured with an equalizer that is used for performing equalization on signals that are received by the receiver. Ex. 1003 at 463-64; Ex. 1005, ¶192.

Ex. 1003 at Fig. 21.2 (annotated); *see also* Ex. 1005, Fig. M.

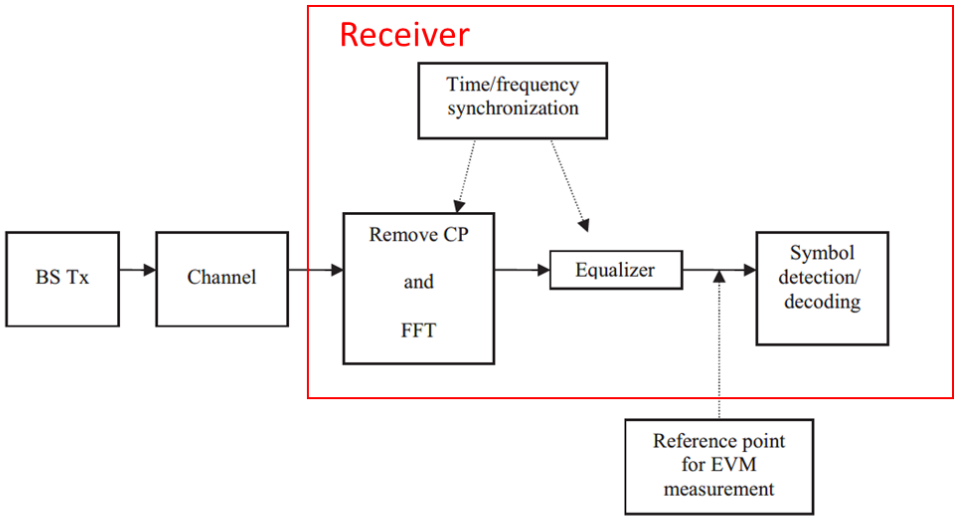

Figure 21.2: Measurement points for the EVM for the downlink signal.

Ex. 1003 at Fig. 21.3 (annotated); *see also* Ex. 1005, Fig. N.

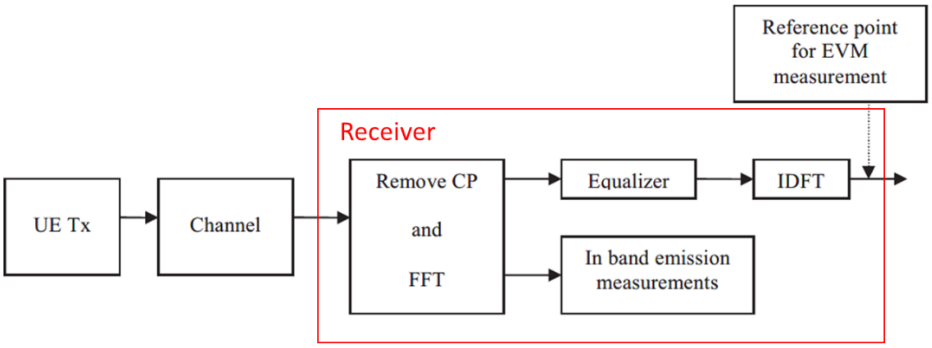

Figure 21.3: Measurement points for the EVM for the uplink signal.

Sesia also discloses that various types of equalization algorithms can be used by the receiver to remove noise that a transmitted signal experiences as it passes

through a radio channel. Ex. 1003 at 15, 128, 165; Ex. 1005, ¶193. A POSITA would thus readily appreciate that Sesia discloses performing equalization at the receiver. Ex. 1005, ¶193.

6. Claim 7

Sesia discloses this limitation. Ex. 1005, ¶¶195-99. Furthermore, the use of coordinated multiple-point (CoMP) systems is Applicant admitted prior art. In the background section of the ’347 Patent, the ’347 Patent explicitly discloses the usage of CoMP systems as a means to increase system performance. Ex. 1001 at 1:11-21; *see also* Ex. 1005, ¶42.

Sesia also discloses that CoMP systems were well known in the art prior to the effective filing date of the ’347 Patent. Ex. 1003 at 669-71; Ex. 1005, ¶196. In fact, Sesia notes that CoMP transmission and reception received significant attention in academic literature and was studied as a technique for increasing performance within an LTE system. Ex. 1003 at 669-71; Ex. 1005, ¶196.

As shown in Figure 11.1 below, Sesia discloses an evolution of MIMO concepts from a simple diversity setup to an advanced joint-processing CoMP technique (shown as Cooperative Multicell MU-MIMO). Ex. 1003 at 250-51; Ex. 1005, ¶197.

Ex. 1003 at **Fig.** 11.1; see also Ex. 1005, Fig. O.

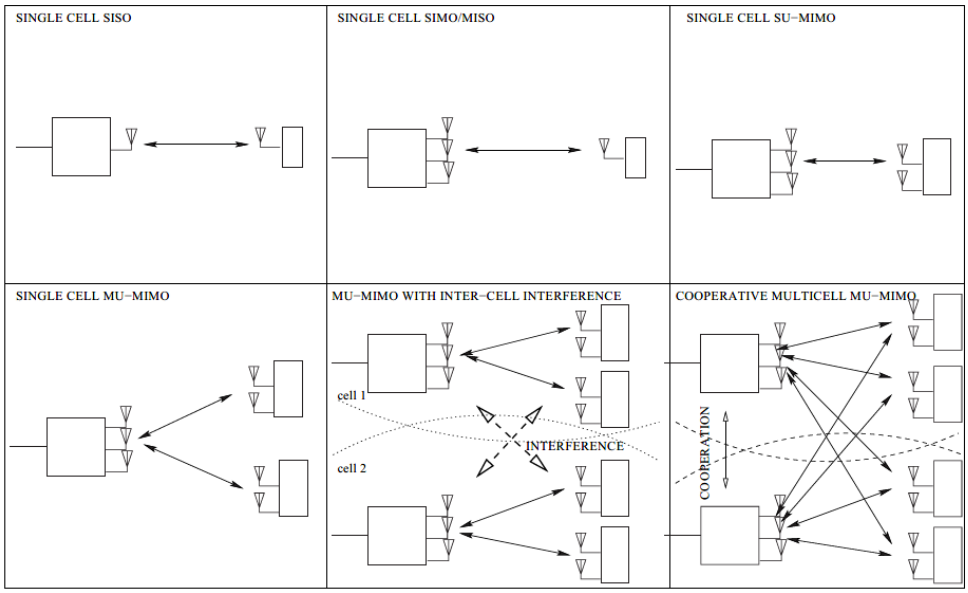

Figure 11.1: The evolution of MIMO technology, from traditional single antenna communication, to multi-user MIMO scenarios, to the possible multicell MIMO networks of the future.

In addition, Sesia discloses that, in the uplink, CoMP reception at different cells is already possible as part of the network implementation in LTE Release 8. Ex. 1003 at 618; Ex. 1005, ¶198. Sesia also discloses that a later release of LTE-Advanced may incorporate enhanced support for CoMP schemes to further improve spectral efficiency. Ex. 1003 at 619; Ex. 1005, ¶198.

It is thus evident that a POSITA would appreciate in light of Sesia that CoMP systems and joint processing techniques in a CoMP system were well known in the art prior to the effective filing date of the ’347 Patent. Ex. 1005, ¶198. Thus, Sesia discloses and/or renders obvious “equalizing the predistorted second signal is

performed using a joint processing technique in a coordinated multiple-point (CoMP) system," as recited in Claim 7.

7. Claims 8-12, 14-17, 19-23

Claims 8-11, 14-17, and 19-23 mirror claims 1-4 and 6-7 as set forth in the following chart. Sesia renders obvious these claims for the same reasons set forth above. Ex. 1005, ¶¶200-273. Claims 12, 17, and 23 and limitations [15.2], [15.3], [19.2] and [19.3] do not mirror any limitations from claims 1-4 and 6-7 and so are discussed in further detail below.

Claim Limitation	**Corresponding Claim Limitation(s)**
[8.0]	[1.0]
[8.1]	[1.0]
[8.2]	[1.0]
[8.3]	[1.0]
[8.4]	[1.1] through [1.4]
[8.5]	[1.5] through [1.7]
9	2
10	3
11	4
14	6
[15.0]	[1.0]

[15.1]	[1.0]
[15.3.1]	[1.1]
[15.3.2]	[1.2] through [1.4]
[15.3.3]	[1.5]
[15.3.4]	[1.6]
16	2
[19.0]	[1.0]
[19.1]	[1.0]
[19.3.1]	[1.1], [1.2]
[19.3.2]	[1.3]
[19.3.3]	[1.4]
[19.3.4]	[1.5] through [1.7]
20	2
21	3
22	4

(a) Claims 12, 17, and 23

Sesia discloses these limitations. Ex. 1005, ¶¶218-220, 246-47, 272-73. Sesia provides numerous disclosures about the usage of SISO and MIMO in wireless communication systems. *See e.g.*, Ex. 1003 at 250-51; Ex. 1005, ¶219. For example, as shown above in Figure 11.1 of Sesia, Sesia discloses several examples of SISO

and MIMO antenna configurations. Ex. 1003 at 250-51; Ex. 1005, ¶219, Fig. O. A POSITA would thus appreciate that the usage of SISO and MIMO in wireless communications was well known in the art before the effective filing date of the '347 Patent. Ex. 1005, ¶219.

(b) Limitations [15.2], [15.3], [19.2], and [19.3]

Sesia discloses that, in LTE, the core network comprises base stations which are known as NodeBs or evolved NodeBs (eNodeBs) that are configured to communicate with a receiver (*e.g.*, a UE). Ex. 1003 at xxxv, xxxii, xl, and 26; Ex. 1005, ¶225, Fig. P. A POSITA would thus understand that the terms "base station," "NodeB," and "eNodeB" can all be used interchangeably in Sesia. Ex. 1005, ¶225.

Sesia discloses and/or renders obvious "a computing device." Ex. 1005, ¶¶229-30. Sesia discloses a transmitter device, such as an eNodeB or a UE, is configured with a microprocessor and/or a Digital Signal Processor (DSP) for handling and processing data (*e.g.*, Service Data Units (SDUs) and Protocol Data Units (PDUs)) that is transmitted to a receiver device. Ex. 1003 at 88 and 124; Ex. 1005, ¶230. A POSITA would thus appreciate that the transmitter is a computing device that includes one or more microprocessors and/or DSPs for performing various operations and processing data. Ex. 1005, ¶230.

Sesia provides multiple disclosures relating to how computer-readable storage mediums (*i.e.*, memories) are used in conjunctions with performing various

operations related to wireless communications. *See e.g.*, Ex. 1003 at 233-36; Ex. 1005, ¶233. For example, some of the examples provided by Sesia include channel coding, Turbo coding, Contention-Free Turbo Coding, and Low-Density Parity-Check (LDPC) coding. Ex. 1003 at 233-36; Ex. 1005, ¶233. In addition, a POSITA would readily appreciate that the usage of computer-readable storage mediums (*i.e.*, memories) to store executable instructions for processors (*e.g.*, microprocessors or DSPs) is well-known in electrical arts prior to the effective filing date of the '347 Patent. Ex. 1005, ¶234.

B. Ground 2: Forenza

1. Claim 1

(a) [1.0]

Forenza, and in particular Figure 6, discloses a base station with a transmitter comprising multiple antennas that each transmit a signal to receivers (such as client devices), where each signal travels on a propagation path, *i.e.* each propagation path is capable of carrying a transmitted signal. Ex. 1005, ¶¶279-81. For example, in the annotated version of Figure 6 below, base station 500 transmits training signals to client device 1 along three different propagation paths highlighted in red. *See* Ex. 1014, 15:4-18; Ex. 1005, ¶280. As depicted in Forenza's figures, each of these propagation paths are different propagation paths because, as Forenza explains, each antenna of the transmitter makes a "separate transmission[]" to each client device, which processes each training signal transmission through a "characterization

process" in order to "characterize the resulting signal (e.g., identifying phase and amplitude distortions ...) and store[] the characterization in memory." Ex. 1014, 31:18-26.

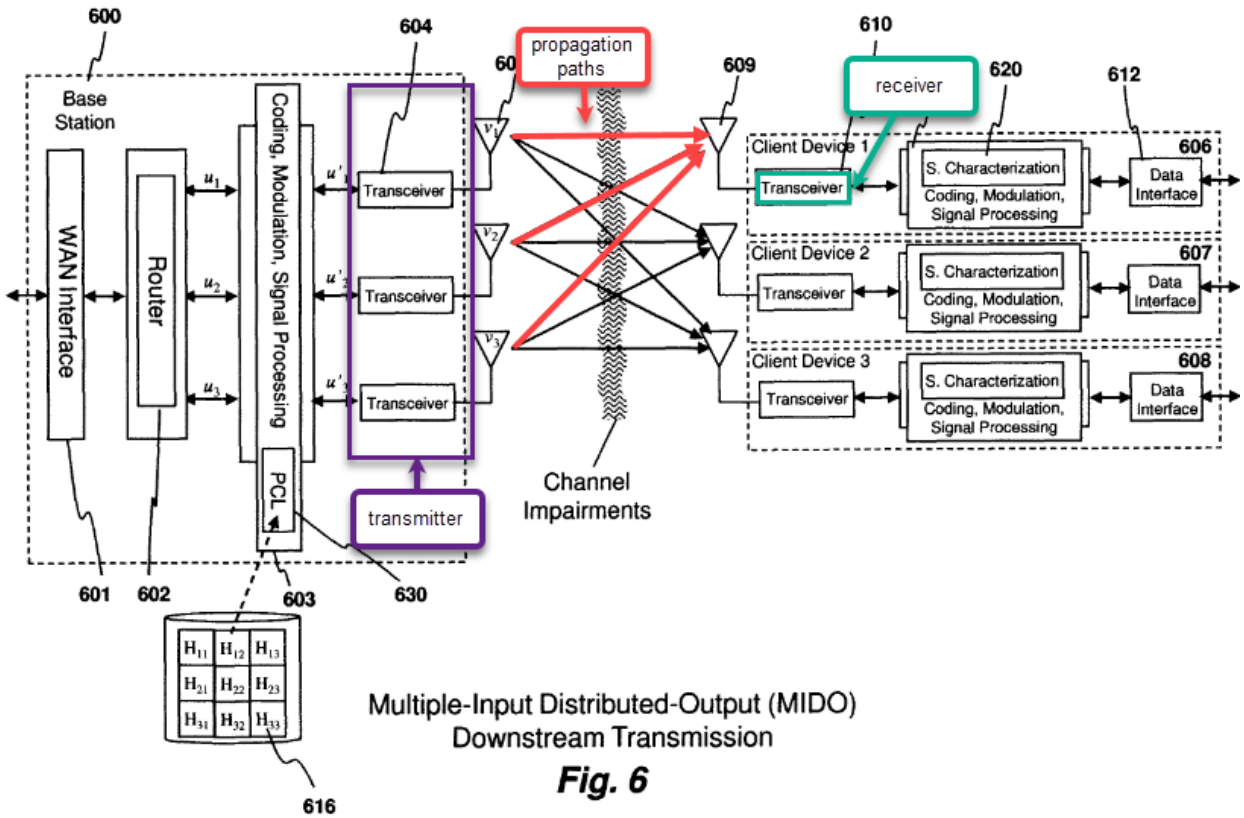

Multiple-Input Distributed-Output (MIDO) Downstream Transmission

Fig. 6

These characterizations are actually characterizations of each channel. *Id.*, 26:39-40. The characterization "may include many factors including, for example, phase and amplitude relative to a reference internal to the receiver, an absolute reference, a relative reference, characteristic noise, or other factors." *Id.*, 26:50-54. The characterization is further "typically defined as a vector that characterizes phase and amplitude changes of several aspects of the signal when it is transmitted across the channel." *Id.*, 26:54-57. A POSITA would understand that such characteristics

are characteristics of the propagation path that the signal takes, and are different because the paths are different. Ex. 1005, ¶281. Because Forenza discloses that a characterization is generated and stored for each transmission, a POSITA would understand that the transmitted signals travel on different propagation paths, as it would otherwise not be necessary to generate and store each channel's characterization. *Id.*

(b) [1.1]

Forenza, and in particular Figure 4 (annotated below), teaches that the base station transmits a first signal to the first client device via a first propagation path. Ex. 1005, ¶¶282-83. Forenza teaches that "a training signal is transmitted ..., one-by-one, by each of the antennas 405," with Figure 4 depicting "the first training signal transmission" of the "three separate transmissions in total." Ex. 1014, 31:6-10.

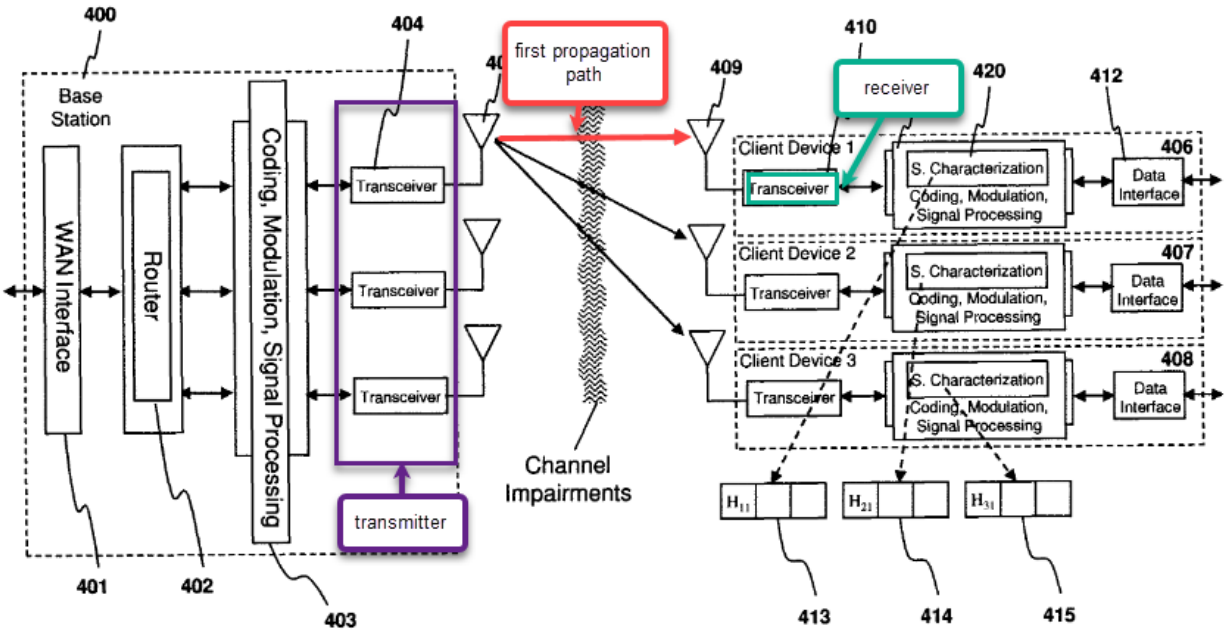

Antenna 1 Pilot Signal Transmission

Fig. 4

(c) [1.2]

Forenza discloses that "[e]ach Client Device 406-408 receives a training signal through its antenna 409." Ex. 1014, 31:18-19; Ex. 1005, ¶¶284-85.

(d) [1.3]

Forenza discloses that the client device generates a channel characterization (*i.e.* ***perform a channel estimation***) based on the training signal. Ex. 1014, 31:18-26; Ex. 1005, ¶¶286-91. The characterization "may include many factors including, for example, phase and amplitude relative to a reference internal to the receiver, an absolute reference, a relative reference, characteristic noise, or other factors," all of which are examples of obtaining path parameter information (as construed by Patent Owner). *Id.*, 26:50-54; *see also* 31:18-26 ("identifying phase and amplitude

distortions"). The characterization can be a "vector of phase/amplitude offsets" containing "some fixed number of phase and amplitude offsets" such as "eight." *Id.*, 31:43-46. Forenza labels these vectors as H_{nm}, where n is the client device and m is the propagation path. Ex. 1005, ¶287. These vectors are stored in memory at the client devices. *Id.*, 31:50-59.

Forenza also describes such characterizations as CSI, *i.e.* channel state information. *Id.*, 15:4-18 (describing Figures 4-6); Ex. 1005, ¶288. As discussed above, CSI is path parameter information as construed by Patent Owner.

Forenza also discloses that the user device estimates channel information that is later used by the base station to compute a "precoding matrix to cancel inter-carrier and inter-user interference caused by I/Q [in-phase and quadrature] imbalance." *Id.*, 37:12-20. In particular, the user device comprises "channel estimation logic" that "estimates the channels ... via training symbols and feedbacks these estimates to the precoder 1302 within the AP." *Id.*, 43:66-44:2. A POSITA would understand that these channel estimates contain path parameter information (as construed by Patent Owner) used to cancel "interference due to I/Q gain and phase imbalance." *Id.*, 44:3-4, 41:64-42:25; Ex. 1005, ¶289. A POSITA would understand that these teachings are from the same embodiment as Figures 3-6. *Id.*

To the extent Patent Owner argues that these disclosures are from different embodiments, it would have been obvious to a POSITA to combine the two

embodiments. Ex. 1005, ¶290. For clarity, Petitioner denotes the first embodiment as the "Figures 3-6 embodiment" and the second embodiment as the "I/Q Imbalance embodiment." A POSITA would have been motivated to modify the Figures 3-6 embodiment to include channel estimations from the I/Q Imbalance embodiment, as this would allow for cancelation of inter-carrier and inter-user interference. *Id.*, ¶290. Indeed, Forenza describes that the process for calculating channel estimations for I/Q Imbalance embodiment is similar to the process for calculating phase and amplitude offsets in the Figures 3-6 embodiment—specifically, that both involve user devices deriving channel estimates from training signals sent from the base station, and then sending those channel estimates to the base station for generating a precoding matrix. *Id.*

Moreover, Forenza describes that the I/Q Imbalance embodiment is "a system and method to compensate for in-phase and quadrature (I/Q) imbalance in distributed-input distributed-output (DIDO) systems with orthogonal frequency division multiplexing (OFDM)." Ex. 1014, 37:12-16. A POSITA would understand that a DIDO-OFDM is the same system as the MIDO-OFDM system described in the Figures 3-6 embodiment. *See* Ex. 1014, Fig. 2 (depicting a DIDO system comprising a base station with multiple antennas and user devices with single antennas), Fig. 3 (depicting a MIDO system comprising the same); 15:4-18 (describing Figures 4-6 as depicting DIDO distributed antennas); 27:38-31

(including OFDM as "[a]n appropriate modulation scheme" for the Figures 3-6 embodiment); Ex. 1005, ¶291. Given these compatibilities, a POSITA would have reasonably expected the combination to succeed.

(e) [1.4]

Forenza discloses that after all training signals are sent and each client device generates channel characterizations for them (*i.e.* H vectors which are collectively stored as matrix H), "each Client Device 506-508 transmits back to the Base Station 500 the 1x3 row 513-515 of matrix H that it has stored," *i.e.* ***transmits the channel estimation***. *Id.*, 32:8-10. This process is depicted in Figure 5, annotated below, which shows that the characterizations (*i.e.* ***channel estimation***) are sent to the base station via the same propagation paths as the training signals depicted in Figure 4. Ex. 1005, ¶¶292-93.

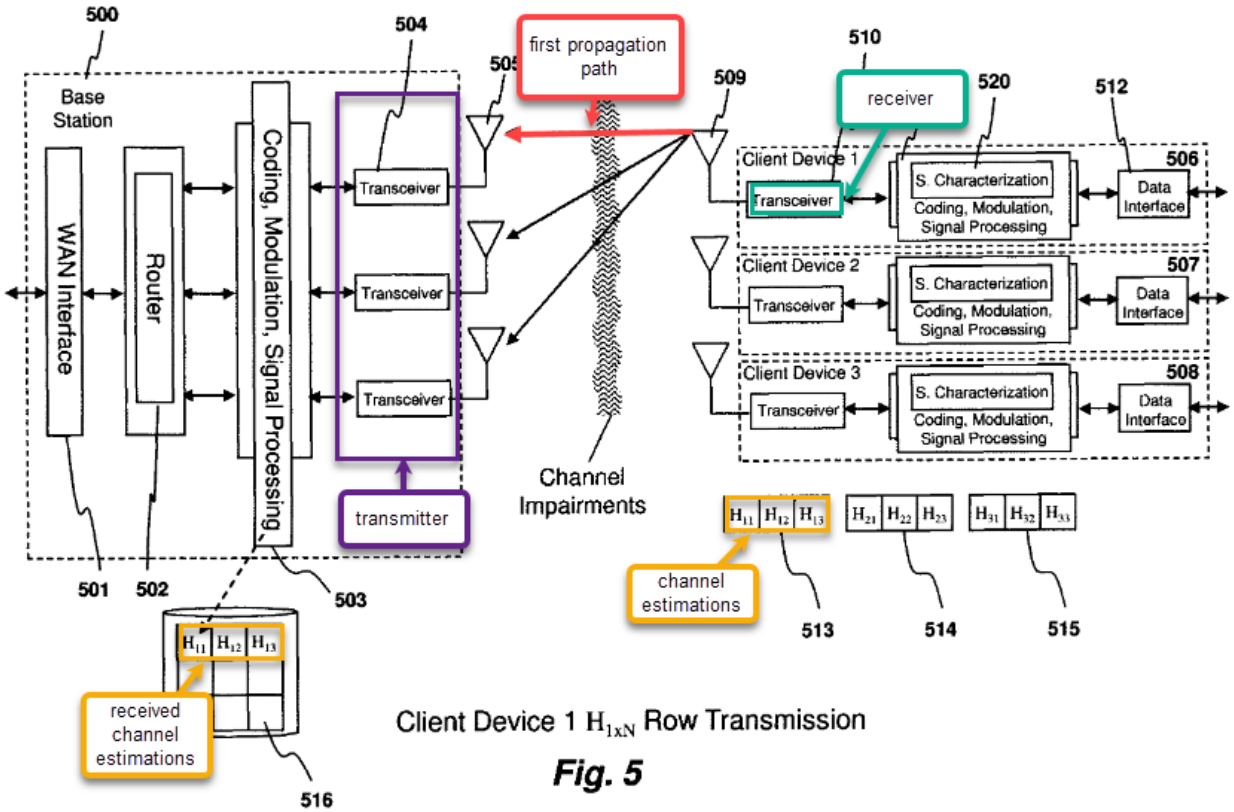

Fig. 5

(f) [1.5]

Forenza discloses, including in Figure 6, that the base station "includes signal precoding logic 630 for uniquely coding the signals transmitted from each of the antennas 605 based on the signal characterization matrix 616." Ex. 1014, 32:59-62; Ex. 1005, ¶¶294-99. As discussed above, the term "predistorting" includes precoding of signals based on Patent Owner's apparent construction of the term.

Specifically, Forenza teaches that bit streams u1, u2, and u3 (*i.e.* ***second signals***) are precoded by multiplying them "by the inverse of the H matrix 616 [*i.e.* ***channel estimations***], producing three new bit streams, u'1-u'3." *Id.*, 32:65-67.

As discussed above, the H matrix contains phase and amplitude offsets that are characteristic of each propagation path. A POSITA would understand that precoding a signal using phase and amplitude offsets would result in modulating the signal in a time, frequency, and spatial domain. Ex. 1005, ¶297. Specifically, when offsetting a portion of a signal's phase or amplitude, this results in modulating the signal in the time, frequency, and spatial domain. *Id.*

Forenza further teaches that these characterizations are also called CSI (channel state information), and that "[f]rom the received CSI, the BS computes the link quality metrics in time/frequency/space domains," which are used for precoding. Ex. 1014, 51:38-46; Ex. 1005, ¶298.

In addition, Forenza teaches that the I/Q Imbalance embodiment, which as discussed above would have been obvious to incorporate with Forenza's Figures 3-6 embodiment, uses "an I/Q mismatch aware DIDO precoder at the station ... that uses I/Q channel information to perform functions including ... space-time-frequency mapping," *i.e.* precoding in a space, time, and frequency domain. Ex. 1014, 37:58-62; *see also* 46:40-47 ("configurator that uses an IQ-aware channel estimate ... to configure the DIDO IQ-aware precoder, choose the modulation rate, coding rate ... and their mappings to space-time-frequency code slots"); 52:11-15 ("[D]ifferent DIDO modes can be assigned to different time slots ... such that the adaptation may occur in time, frequency and space domains."). A POSITA would

understand these teachings to refer to a precoder that uses modulating and coding rates that are specific to the space, time, and frequency domains. Ex. 1005, ¶299.

(g) [1.6] and [1.7]

Forenza discloses that the precoded bitstreams (*i.e.* ***predistorted second signal***) are "transmitted as RF by Tranceivers 604 and antennas 605" (*i.e.* ***transmitter***) and "received by the Client Devices 606-608" (*i.e.* ***receiver***). Ex. 1014, 33:1-5. As depicted in Figure 6, annotated below, the precoded bitstreams are transmitted via the same first propagation path as the training signals from Figure 4. Ex. 1005, ¶¶300-05.

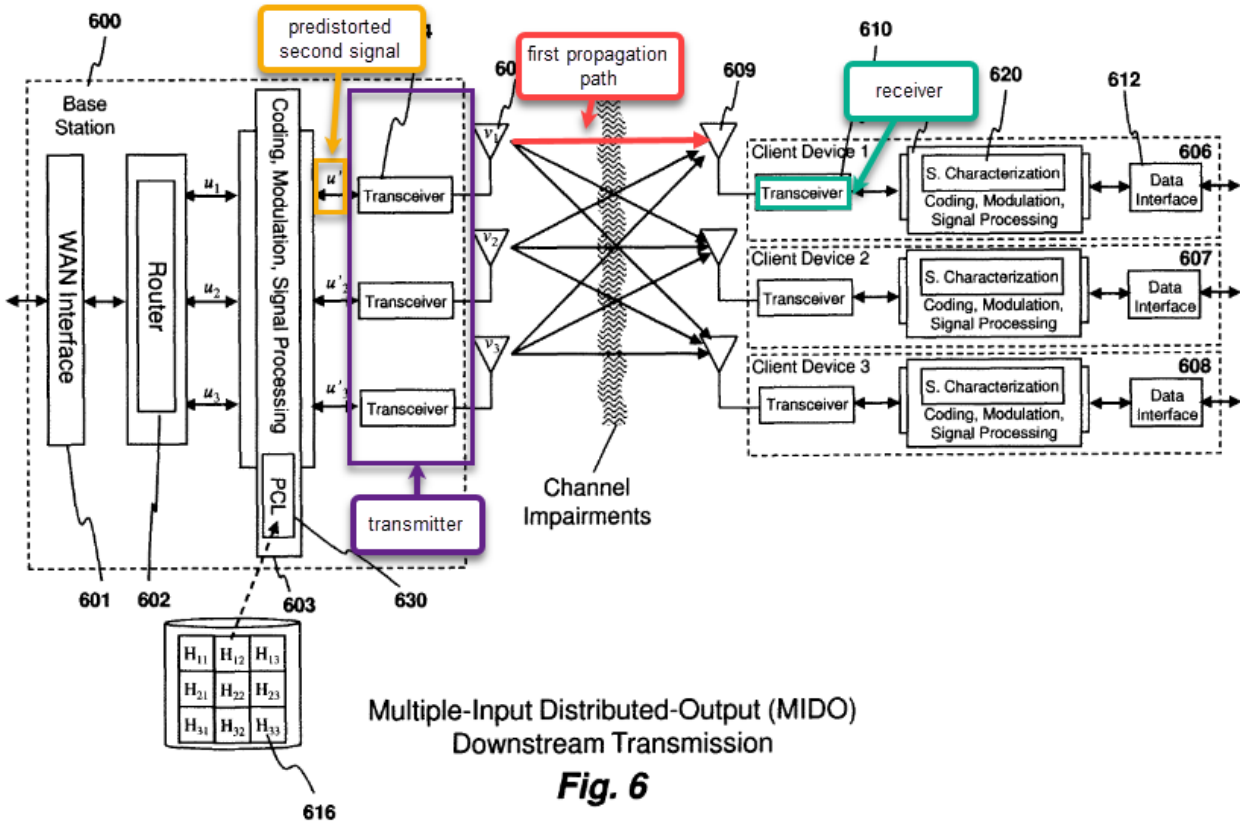

Multiple-Input Distributed-Output (MIDO) Downstream Transmission

Fig. 6

2. Claim 2

As discussed above, Forenza discloses a path parameter information in the form of phase offset, which a POSITA would understand to be an estimation of a delay because a phase offset is a modulation in the time domain. Ex. 1005, ¶¶306-08.

Forenza also teaches that "I/Q imbalance" includes "delay imbalance." Ex. 1014, 44:57-58.

3. Claim 3

Forenza discloses that "one embodiment of the invention polarizes the signal in order to increase the effective throughput of the system." Ex. 1014, 29:7-9. A POSITA would understand that in order for the base station to polarize the signal, it would need to know the polarization status of the propagation path for that signal, and thus a POSITA would understand Forenza to be teaching that the polarization status to the base station as part of the channel state information. Ex. 1005, ¶¶309-10.

4. Claim 4

Forenza discloses "estimat[ing] the carrier frequency offset at the receiver," which it discloses can be calculated using ESPRIT. Ex. 1014, 59:47-63 ("OFDM blind carrier offset estimation: ESPRIT"); Ex. 1005, ¶¶311-13.

5. Claim 6

As discussed above in Ground 1, equalizing is applicant admitted prior art. Moreover, Forenza discloses that "user devices demodulate data via zero-forcing (ZF), [and] minimum mean-square error (MMSE)," including precoded data. Ex. 1014, 37:21-23. A POSITA would understand that ZF and MMSE are known algorithms for performing equalization of a signal. Ex. 1005, ¶¶314-15.

6. Claim 7

As discussed above in Ground 1, the use of CoMP is applicant admitted prior art. A POSITA would have found it obvious to use CoMP in Forenza's system because it is the application of a known technique to a known device ready for improvement to yield predictable results. Ex. 1005, ¶¶316-17.

7. Claims 8-12, 14-17, 19-23

Claims 8-11, 14-17, and 19-23 mirror claims 1-4 and 6-7 as set forth in the following chart. Forenza renders obvious these claims for the same reasons set forth above. Ex. 1005, ¶¶318-83. Claims 12, 17, and 23 and limitations [15.2], [15.3], [19.2] and [19.3] do not mirror any limitations from claims 1-4 and 6-7 and so are discussed in further detail below.

Claim Limitation	Corresponding Claim Limitation(s)
[8.0]	[1.0]
[8.1]	[1.0]

[8.2]	[1.0]
[8.3]	[1.0]
[8.4]	[1.1] through [1.4]
[8.5]	[1.5] through [1.7]
9	2
10	3
11	4
14	6
[15.0]	[1.0]
[15.1]	[1.0]
[15.3.1]	[1.1]
[15.3.2]	[1.2] through [1.4]
[15.3.3]	[1.5]
[15.3.4]	[1.6]
16	2
[19.0]	[1.0]
[19.1]	[1.0]
[19.3.1]	[1.1], [1.2]
[19.3.2]	[1.3]

[19.3.3]	[1.4]
[19.3.4]	[1.5] through [1.7]
20	2
21	3
22	4

(a) Claims 12, 17, and 23

Forenza teaches that within the prior art were MIMO systems where a multi-antenna base station sends training signals to a multi-antenna user device and receives channel characterizations to generate a precoding matrix, as described above for claim 1. Ex. 1014, 26:31-28:14, Fig. 1; *see also* 34:7-36 ("One embodiment of the invention illustrated in FIG. 7 employs MIMO techniques"), Fig. 7; Ex. 1005, ¶¶336-37.

(b) Limitations [15.2], [15.3], [19.2], and [19.3]

Forenza discloses that "the Base Stations/APs" described in it specification "may be implemented as software executed on a general purpose or special purpose processor." Ex. 1014, 75:43-46. Forenza further discloses "machine-readable medium for storing the machine-executable instructions." *Id.*, 76:1-8. Thus, Forenza discloses a device containing a processor and machine-readable medium for storing instructions. Ex. 1005, ¶¶344-47.

X. DISCRETIONARY DENIAL

A. *Fintiv*

The six-factor *Fintiv* analysis weighs in favor of the Board declining to exercise discretionary denial. The district court has not indicated it will grant or deny a stay, and so that factor is neutral. Trial is not currently scheduled, although Jury Selection is scheduled for May 5, 2025, approximately a month before the Board's statutory deadline for a final written decision, which given the proximity weighs against denial or is at least neutral. Ex. 1017; *see SMIC Ams. V. Innovative Foundry Techs., LLC*, IPR2020-00786, Paper 10 at 20-21 (Oct. 5, 2020). Moreover, the litigation is at an early stage—Patent Owner only recently served infringement contentions and Petitioners have not yet served invalidity contentions, and the parties have produced a minimal amount of documents (indeed, a Protective Order was only entered a little over a month ago), have not deposed any witnesses, and have not begun claim construction briefing (which does not begin for another eight months). *Id.* Petitioners were also diligent in filing this Petition less than six months after it was served with the complaint. These factors weigh strongly in favor of not denying. Finally, the strong merits presented herein also weigh in favor of not exercising discretionary denial. Together, the factors weigh in favor of the Board declining to exercise its discretion to deny the petition.

B. *General Plastic*

The Board has discretion to deny under §314(a) in consideration of the factors enumerated in the Board's precedential decision *General Plastic Industrial Co., Ltd. v. Canon Kabushiki Kaisha*, IPR2016-01357, Paper 19 (Sept. 6, 2017). An IPR Petition against the '347 patent was recently filed by T-Mobile et al. (collectively, the "Carrier Petitioners") in IPR2024-00136. That Petition has the identical ground of challenge based on Sesia as this Petition (Ground 1), but does not include this Petition's ground of challenge based on Forenza (Ground 2).

Under the *General Plastic* factors, the Board should not exercise its discretion to deny despite the earlier IPR petition. Petitioners have not previously filed a petition directed to the same patent. While Petitioners were aware of Forenza at the time the Carrier Petitioners filed their Petition, that should be outweighed by the fact that this Petition was filed less than one month later without the benefit of Patent Owner's preliminary response or any decision by the Board. The closeness in time of the two Petitions should not have any effect on the Board's ability to render a Final Written Decision in either proceeding.

In addition, since this Petition has the identical Sesia ground as the Carrier Petitioners' Petition, instituting this Petition would not constitute a waste of Board resources. If the Board denies the Petition in IPR2024-00136, then no Board resources would be wasted in granting institution here. If the Board institutes

IPR2024-00136, then any resources spent by the Board in that proceeding could be applied to this proceeding with little effort by the Board or the parties.

In addition, in view of the strong merits of this Petition, Petitioners respectively believe that the Board should give due consideration to this Petition's additional Ground 2. As demonstrated by this Petition and the Petition in IPR2024-00136, the '347 Patent is not novel or non-obvious, and attempts to monopolize wireless technologies standards that were available for years.

C. 35 U.S.C. §325(d)

The Board should decline to deny institution under §325(d) because the PTO has not previously considered the same or substantially the same prior art and arguments Petitioners present here. The references relied upon in this Petition were neither cited nor considered during prosecution of the '347 patent, nor are they duplicative of the references cited by the examiner. Thus, the Board should decline to deny institution under the discretionary authority of §325(d).

XI. MANDATORY NOTICES AND FEES

A. Real Party-In-Interest

The real parties-in-interest for Petitioners are Samsung Electronics America, Inc and Samsung Electronics Co., Ltd. Out of an abundance of caution and to avoid additional issues associated with real parties-in-interest, Petitioners likewise identify T-Mobile USA, Inc., AT&T Services Inc., AT&T Corp., AT&T Mobility

LLC, and Cellco Partnership d/b/a Verizon Wireless because Petitioners' products are accused of infringement in their respective patent infringement actions.

B. Related Matters

Cobblestone Wireless, LLC v. T-Mobile USA, et al., No. 2:22-cv-00477 (E.D. Tex.) filed December 16, 2022

Cobblestone Wireless, LLC v. Verizon Communications Inc., et al., No. 2:22-cv-00478 (E.D. Tex.) filed December 16, 2022

Cobblestone Wireless, LLC v. AT&T Inc. et al., No. 2:22-cv-00474 (E.D. Tex.) filed December 15, 2022

Cobblestone Wireless, LLC v. Samsung Electronics Co., Ltd. et al., No. 2:23-cv-00285 (E.D. Texas) filed June 16, 2023

T-Mobile USA, Inc. et al. v. Cobblestone Wireless, LLC, IPR2024-00136 (PTAB)

C. Counsel and Service Information

Petitioners provide the following counsel and service information. Petitioners consent to electronic service the email addresses listed in the table below. Pursuant to 37 C.F.R. § 42.10(b), a Power of Attorney accompanies this Petition.

LEAD COUNSEL	BACK-UP COUNSEL
James M. Glass (Reg. No. 46729) jimglass@quinnemanuel.com QUINN EMANUEL URQUHART & SULLIVAN, LLP 51 Madison Avenue, 22nd Floor New York, NY 10010 Tel: (212) 849-7000 Fax: (212) 849-7100	Quincy Lu (Reg. No. 76,954) quincylu@quinnemanuel.com QUINN EMANUEL URQUHART & SULLIVAN, LLP 1109 First Avenue, Suite 210 Seattle, WA 98101 Tel: (206) 905-7000 Fax: (206) 905-7100 Jason Williams (*pro hac vice* forthcoming) jasonwiliams@quinnemanuel.com QUINN EMANUEL URQUHART & SULLIVAN, LLP 51 Madison Avenue, 22nd Floor New York, NY 10010 Tel: (212) 849-7000 Fax: (212) 849-7100

D. Payment of Fees

The undersigned authorizes the Office to charge the fee required for this Petition for *Inter Partes* Review to Deposit Account No. 50-5708. Any additional fees that might be due are also authorized.

XII. CONCLUSION

Petitioners request institution of an IPR and cancellation of the Challenged Claims.

Date: December 18, 2023

Respectfully submitted,

By: /s/ *James M. Glass*
James M. Glass

Counsel for Petitioners

CERTIFICATE OF COMPLIANCE WITH TYPE-VOLUME LIMITATION, TYPEFACE REQUIREMENTS, AND TYPE STYLE REQUIREMENTS

1. This Petition complies with the type-volume limitation of 14,000 words, comprising 13,911 words, as counted using the Microsoft Word software that was used to prepare this paper, excluding the parts exempted by 37 C.F.R. § 42.24(a).

2. This Petition complies with the general format requirements of 37 C.F.R. § 42.6(a) and has been prepared using Microsoft® Word 2016 in 14-point Times New Roman.

Date: December 18, 2023

By: */s/ James M. Glass*

James M. Glass
QUINN EMANUEL URQUHART
& SULLIVAN, LLP
51 Madison Avenue, 22nd Floor
New York, NY 10010
Tel: (212) 849-7000
Fax: (212) 849-7100

Counsel for Petitioners

CERTIFICATE OF SERVICE

The undersigned hereby certifies that on December 18, 2023, true and correct copies of the foregoing document and supporting materials were served in its entirety on the Patent Owner at the following address of record as listed on PAIR via Priority Mail Express® or Express Mail:

Maschoff Brennan/Allied Inventors
111 East Broadway, Suite 725
Salt Lake City UT 84111
UNITED STATES
Official Correspondence Address

Courtesy copies were also sent via electronic mail to Patent Owner's counsel of record in the related district court proceeding

Reza Mirzaie rmirzaie@raklaw.com
Marc A. Fenster mfenster@raklaw.com
Neil A. Rubin nrubin@raklaw.com
Christian W. Conkle cconkle@raklaw.com
Jonathan Ma jma@raklaw.com
Amy E. Hayden, ahayden@raklaw.com

Date: December 18, 2023

By: */s/ James M. Glass*
James Glass
QUINN EMANUEL URQUHART
& SULLIVAN, LLP
51 Madison Avenue, 22nd Floor
New York, NY 10010
Tel: (212) 849-7000
Fax: (212) 849-7100

Counsel for Petitioners