US008627708B2

(12) **United States Patent**
McCloskey et al.

(10) **Patent No.: US 8,627,708 B2**
(45) **Date of Patent: Jan. 14, 2014**

(54) **FATIGUE TESTING SYSTEM FOR PROSTHETIC DEVICES**

(75) Inventors: **Benjamin McCloskey**, Evergreen, CO (US); **Craig Weinberg**, Denver, CO (US); **Steven Weinberg**, League City, TX (US)

(73) Assignee: **Biomedical Device Consultants and Laboratories of Colorado, LLC**, Wheat Ridge, CO (US)

(*) Notice: Subject to any disclaimer, the term of this patent is extended or adjusted under 35 U.S.C. 154(b) by 887 days.

(21) Appl. No.: **12/718,316**

(22) Filed: **Mar. 5, 2010**

(65) **Prior Publication Data**

US 2010/0225478 A1 Sep. 9, 2010

Related U.S. Application Data

(60) Provisional application No. 61/158,185, filed on Mar. 6, 2009.

(51) **Int. Cl.**
G01M 3/02 (2006.01)

(52) **U.S. Cl.**
USPC **73/37**

(58) **Field of Classification Search**
USPC 623/2.11, 2.1, 912; 73/37, 865.6, 168; 600/300, 301, 559, 324
See application file for complete search history.

(56) **References Cited**

U.S. PATENT DOCUMENTS

3,911,735 A 10/1975 Di Crispino
4,381,663 A 5/1983 Swanson
4,450,710 A 5/1984 Nettekoven
4,546,642 A 10/1985 Swanson
4,682,491 A * 7/1987 Pickard 73/37
4,972,721 A 11/1990 Conti
5,176,153 A 1/1993 Eberhardt
5,272,909 A 12/1993 Nguyen et al.
5,406,857 A 4/1995 Eberhardt et al.
5,528,944 A 6/1996 Hoyt et al.
5,670,708 A * 9/1997 Vilendrer 73/37
5,792,603 A 8/1998 Dunkelman et al.
6,062,075 A 5/2000 Ritz et al.
6,810,751 B2 11/2004 Moreno et al.
6,881,224 B2 4/2005 Kruse et al.
7,254,988 B2 8/2007 Keeble

(Continued)

FOREIGN PATENT DOCUMENTS

JP 08086728 A2 4/1996

OTHER PUBLICATIONS

International Publication No. WO 2010/102185 A3 with Search Report for PCT/US2010/026329.

Primary Examiner — John Fitzgerald
(74) *Attorney, Agent, or Firm* — Dorsey and Whitney LLP

(57) **ABSTRACT**

A fatigue testing system provides simultaneous cycle testing for a plurality of prosthetic devices under simulated physiological loading conditions. A plurality of sample holders containing test samples of prosthetic devices is positioned between a distribution chamber and a return fluid chamber to form an integrated test chamber. A reciprocating linear drive motor operates a rolling bellows diaphragm to cyclically pressurize fluid within the test chamber and drive the pressurized fluid through the prosthetic devices being tested. The test chamber defines a return flow conduit in fluid communication with each of the sample holders, the return fluid chamber, and the distribution chamber. Compliance chambers and throttle valves associated with each of the sample holders regulate the pressure gradient and back pressure across the prosthetic devices being tested.

26 Claims, 9 Drawing Sheets

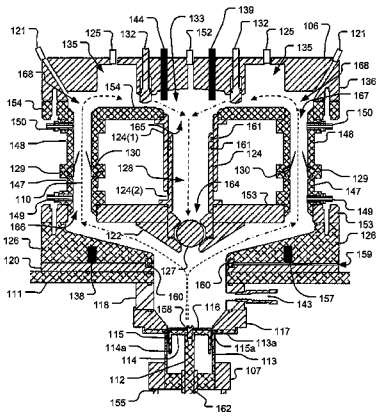

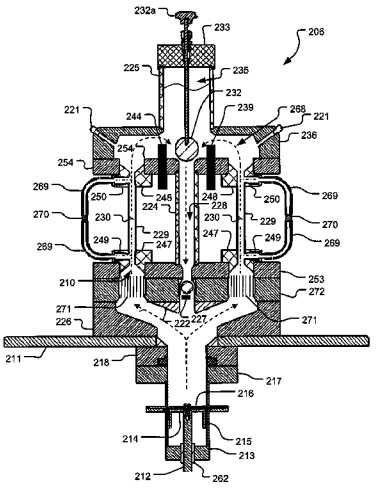

Petitioner's Exhibit 1012
VIVITRO v. BDC
IPR2024-00320

(56) **References Cited**

U.S. PATENT DOCUMENTS

7,348,175	B2	3/2008	Vilendrer et al.	
7,363,821	B2	4/2008	Black et al.	
7,472,604	B2	1/2009	Moore et al.	
7,587,949	B2	9/2009	Dingmann et al.	
7,621,192	B2	11/2009	Conti et al.	
8,034,608	B2	10/2011	Dancu	
8,196,478	B2	6/2012	Lorenz et al.	
8,318,414	B2	11/2012	Dancu et al.	
2003/0066338	A1	4/2003	Michalsky et al.	
2003/0110830	A1	6/2003	Dehdashtian et al.	
2003/0125804	A1 *	7/2003	Kruse et al.	623/2.1
2003/0199083	A1	10/2003	Vilendrer et al.	
2004/0016301	A1	1/2004	Moreno et al.	
2010/0225478	A1 *	9/2010	McCloskey et al.	340/540
2011/0066237	A1	3/2011	Matheny	
2011/0146385	A1	6/2011	Weinberg et al.	
2011/0259439	A1	10/2011	Neerincx	

* cited by examiner

Petitioner's Exhibit 1012
VIVITRO v. BDC
IPR2024-00320

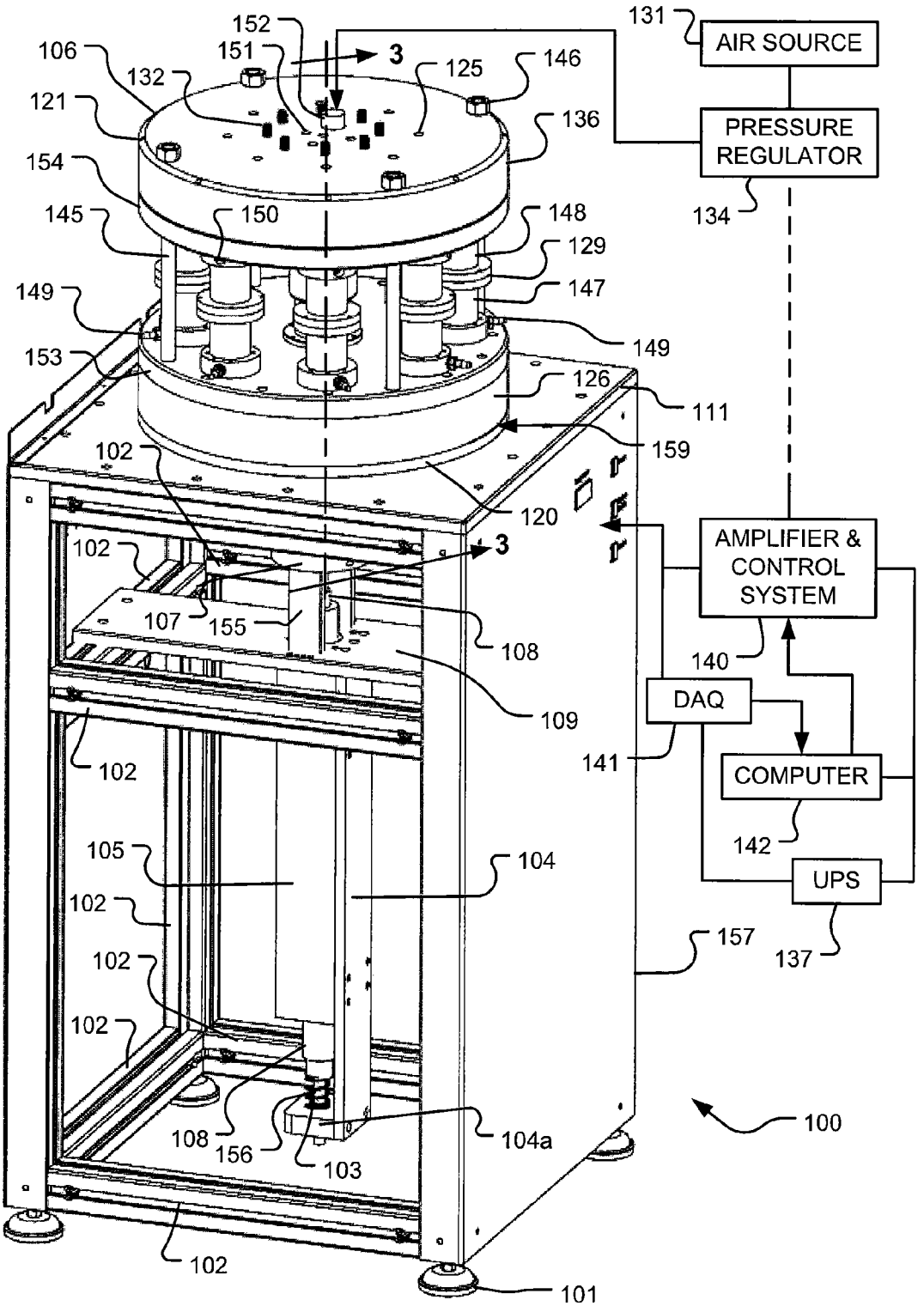

Fig. 1

Petitioner's Exhibit 1012
VIVITRO v. BDC
IPR2024-00320

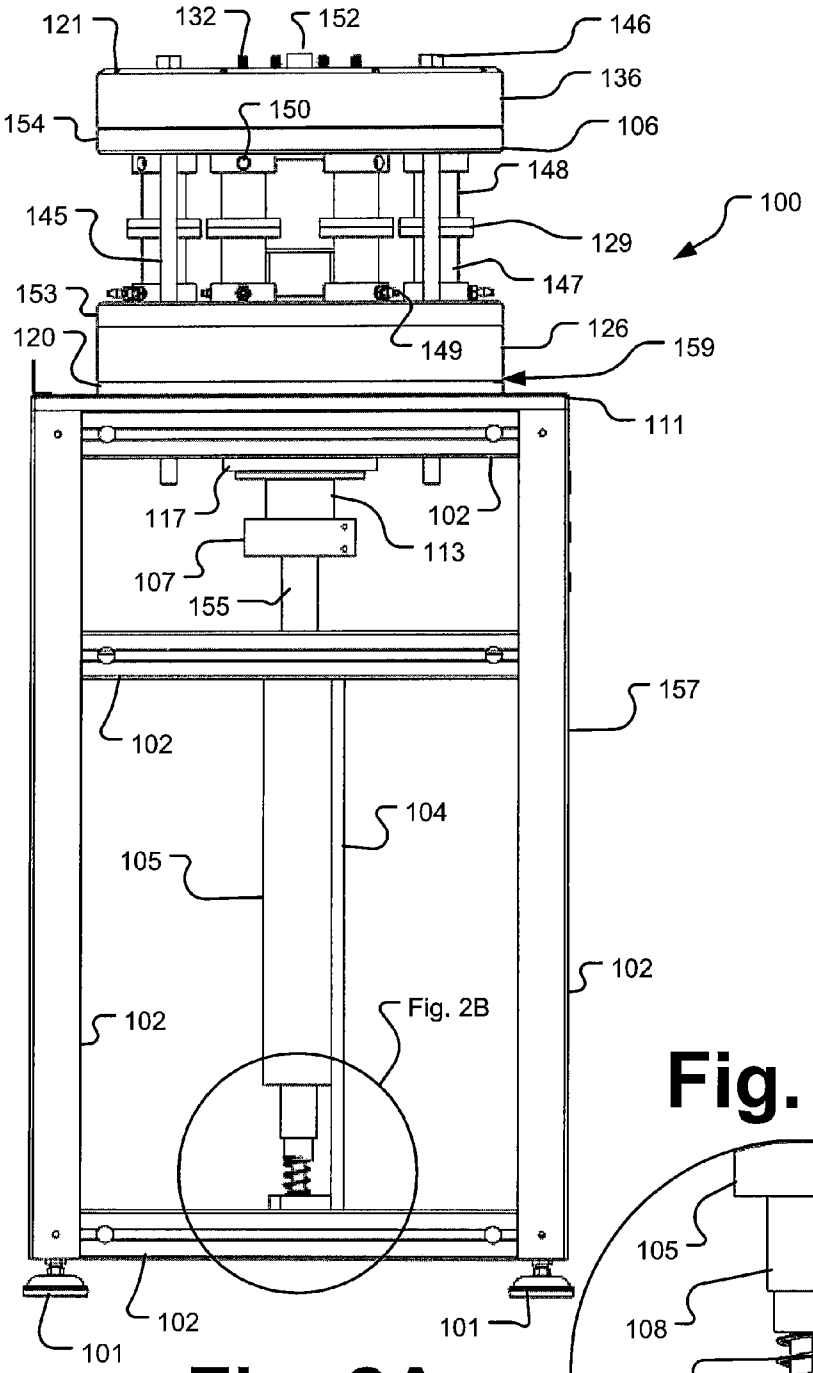

Fig. 2A

Fig. 2B

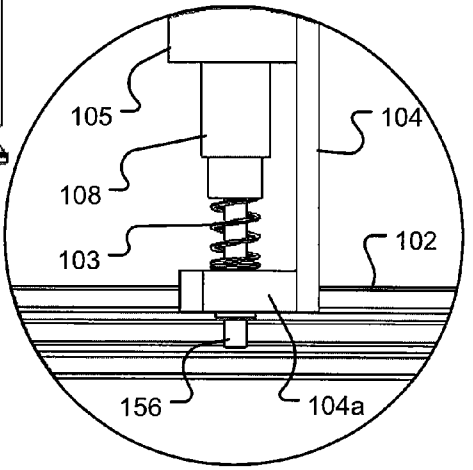

Petitioner's Exhibit 1012
VIVITRO v. BDC
IPR2024-00320

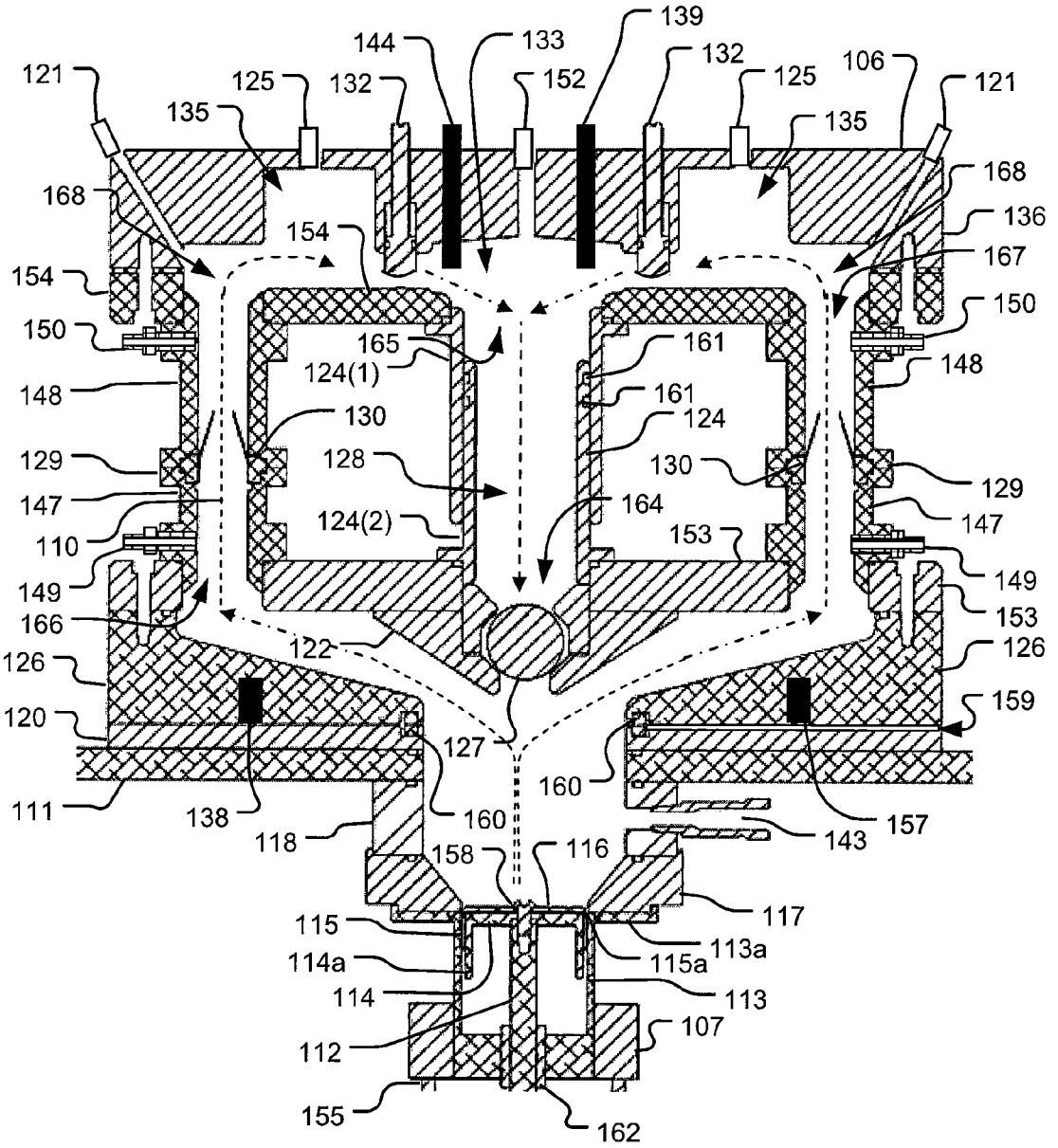

Fig. 3

Petitioner's Exhibit 1012
VIVITRO v. BDC
IPR2024-00320

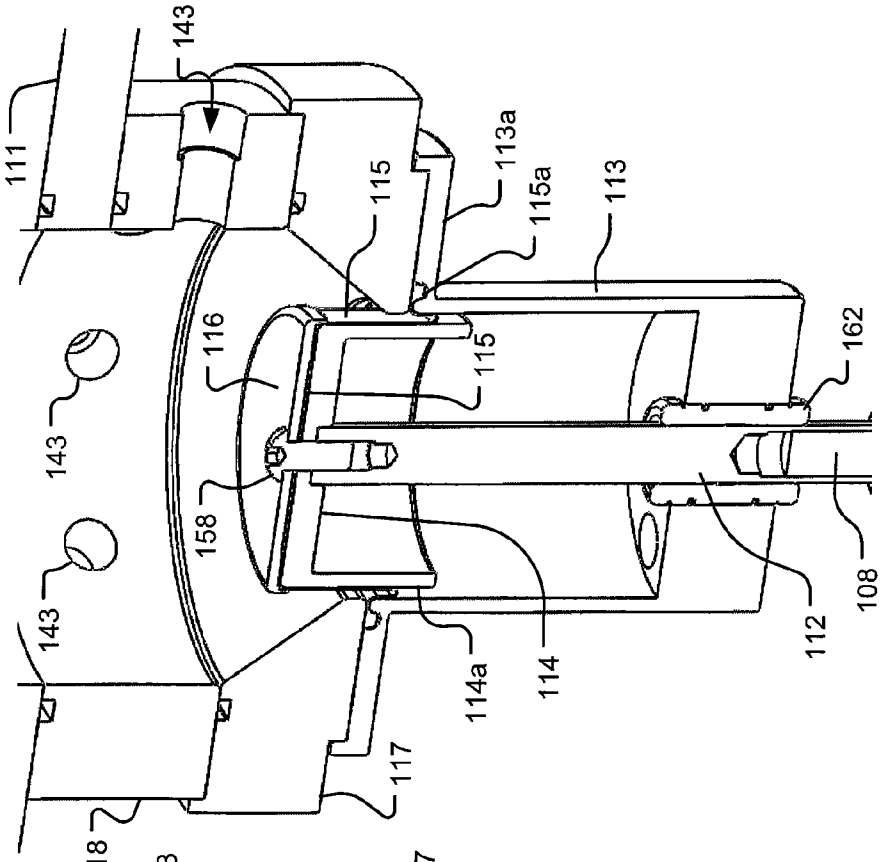

Fig. 4B

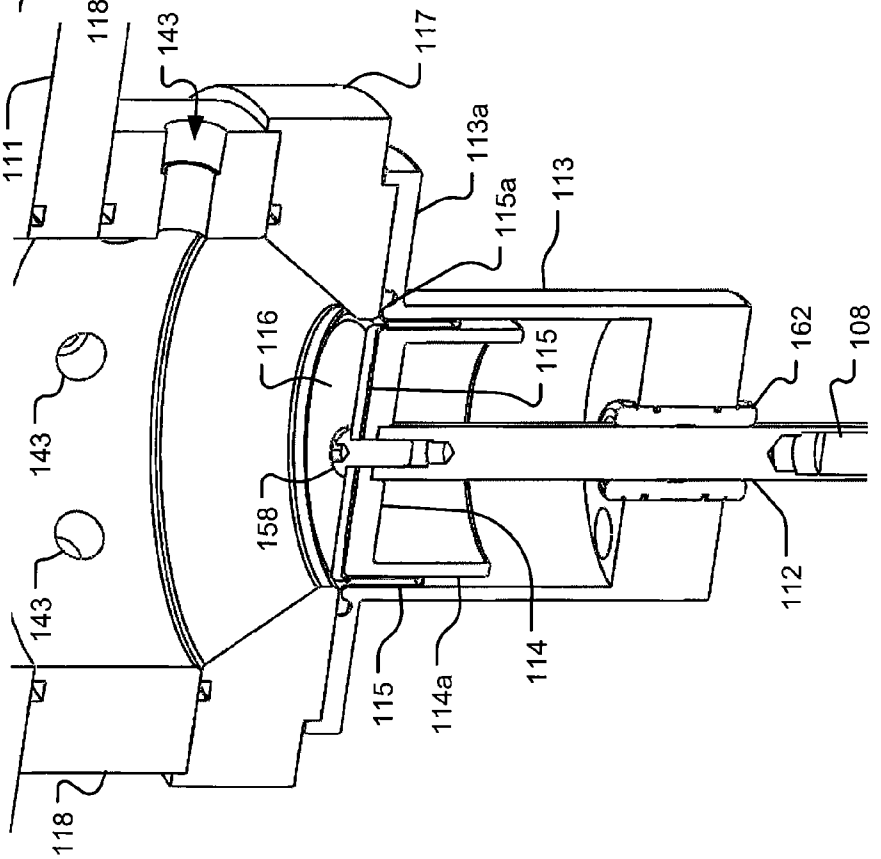

Fig. 4A

Petitioner's Exhibit 1012
VIVITRO v. BDC
IPR2024-00320

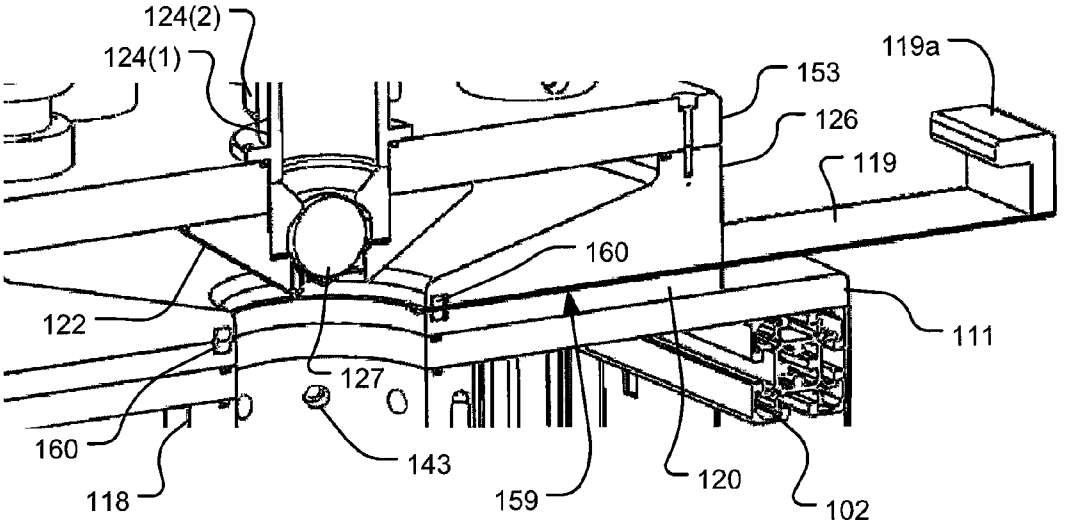

Fig. 5A

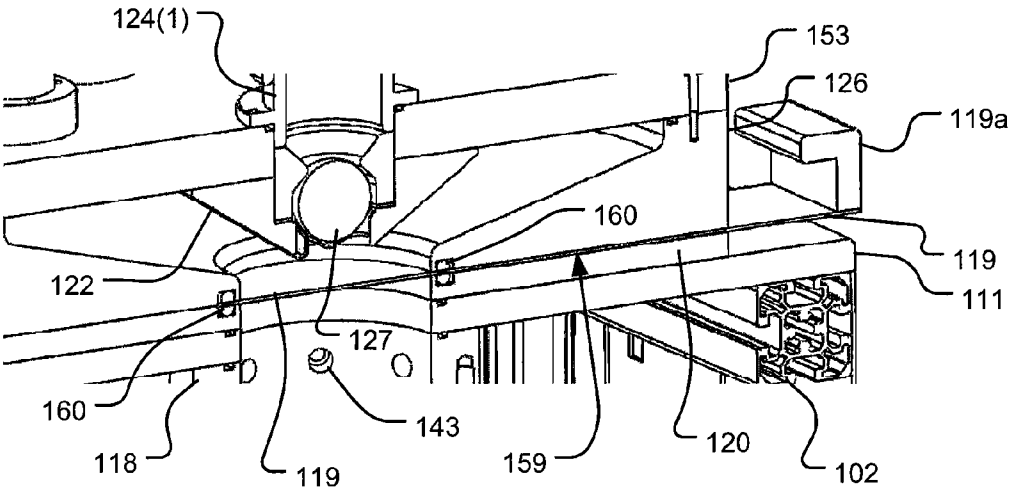

Fig. 5B

Petitioner's Exhibit 1012
VIVITRO v. BDC
IPR2024-00320

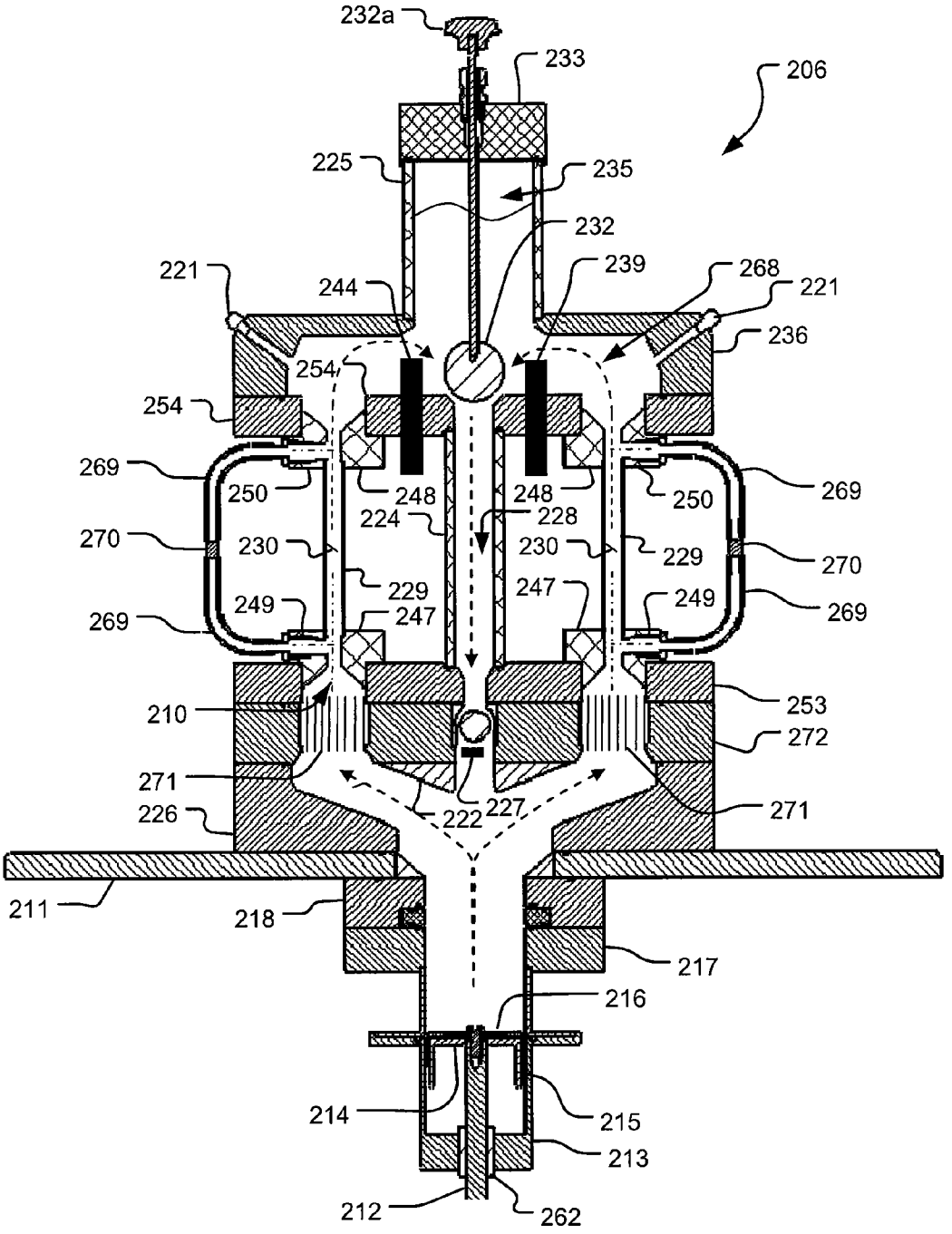

Fig. 6

Petitioner's Exhibit 1012
VIVITRO v. BDC
IPR2024-00320

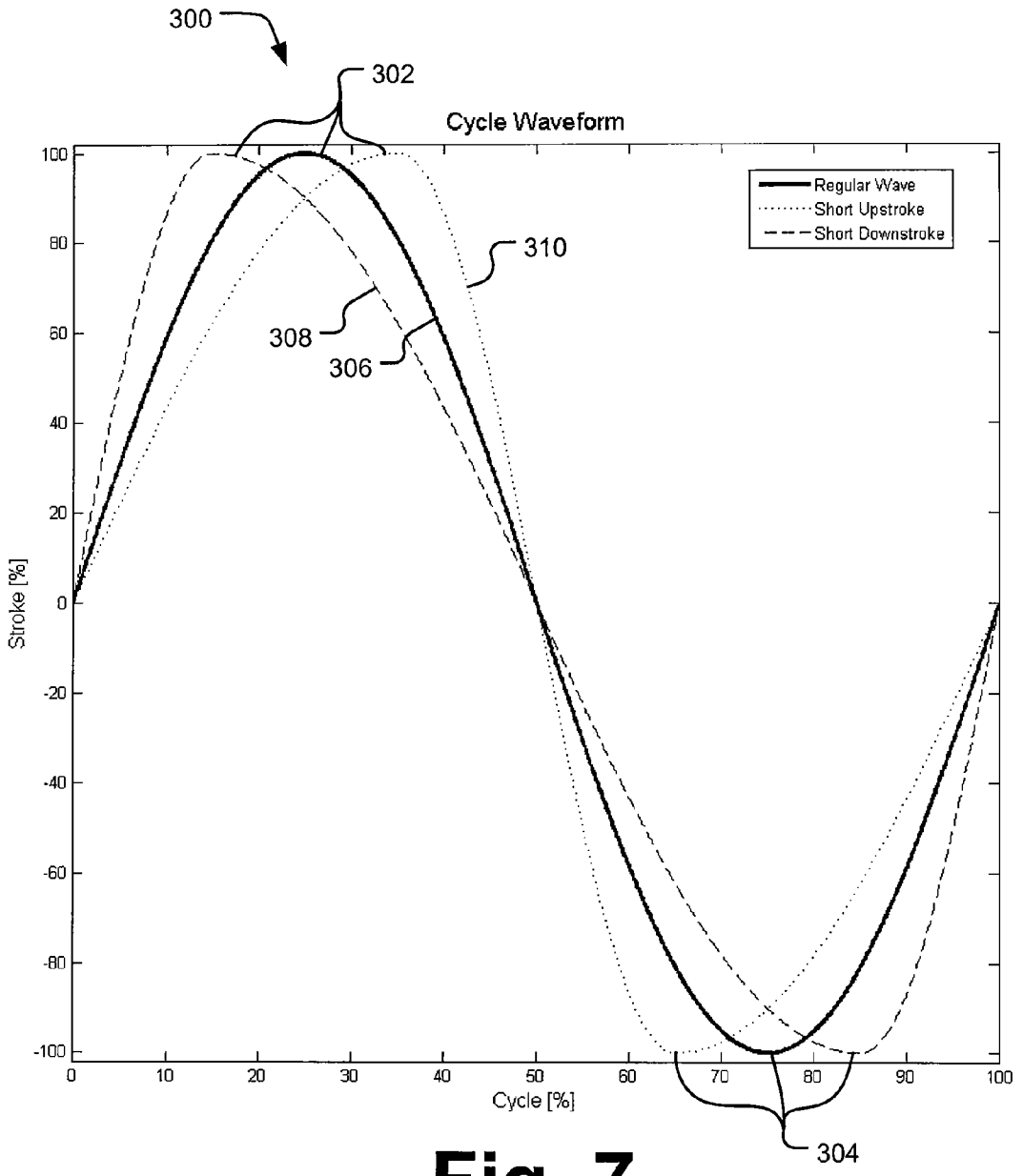

Fig. 7

Petitioner's Exhibit 1012
VIVITRO v. BDC
IPR2024-00320

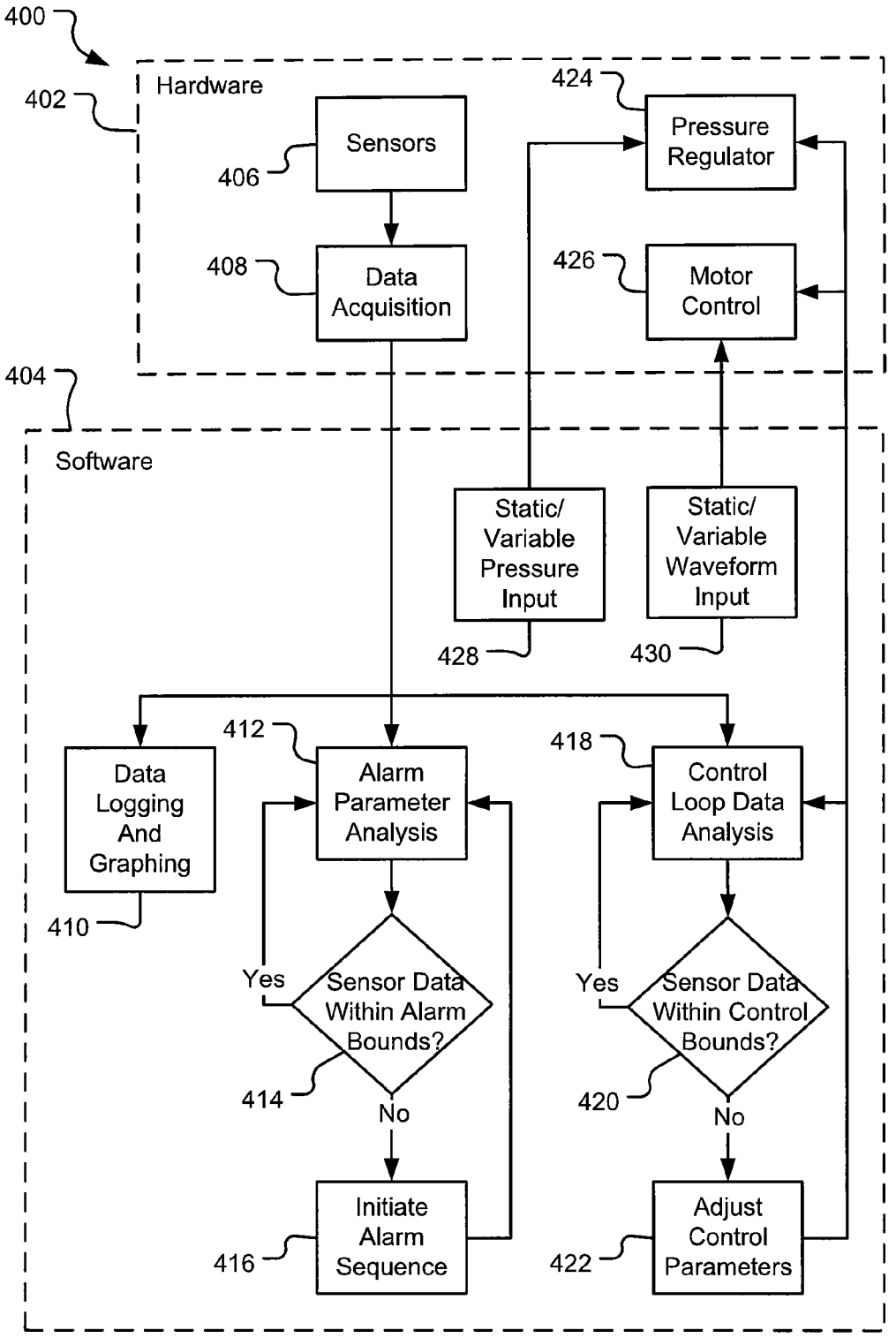

Fig. 8

Petitioner's Exhibit 1012
VIVITRO v. BDC
IPR2024-00320

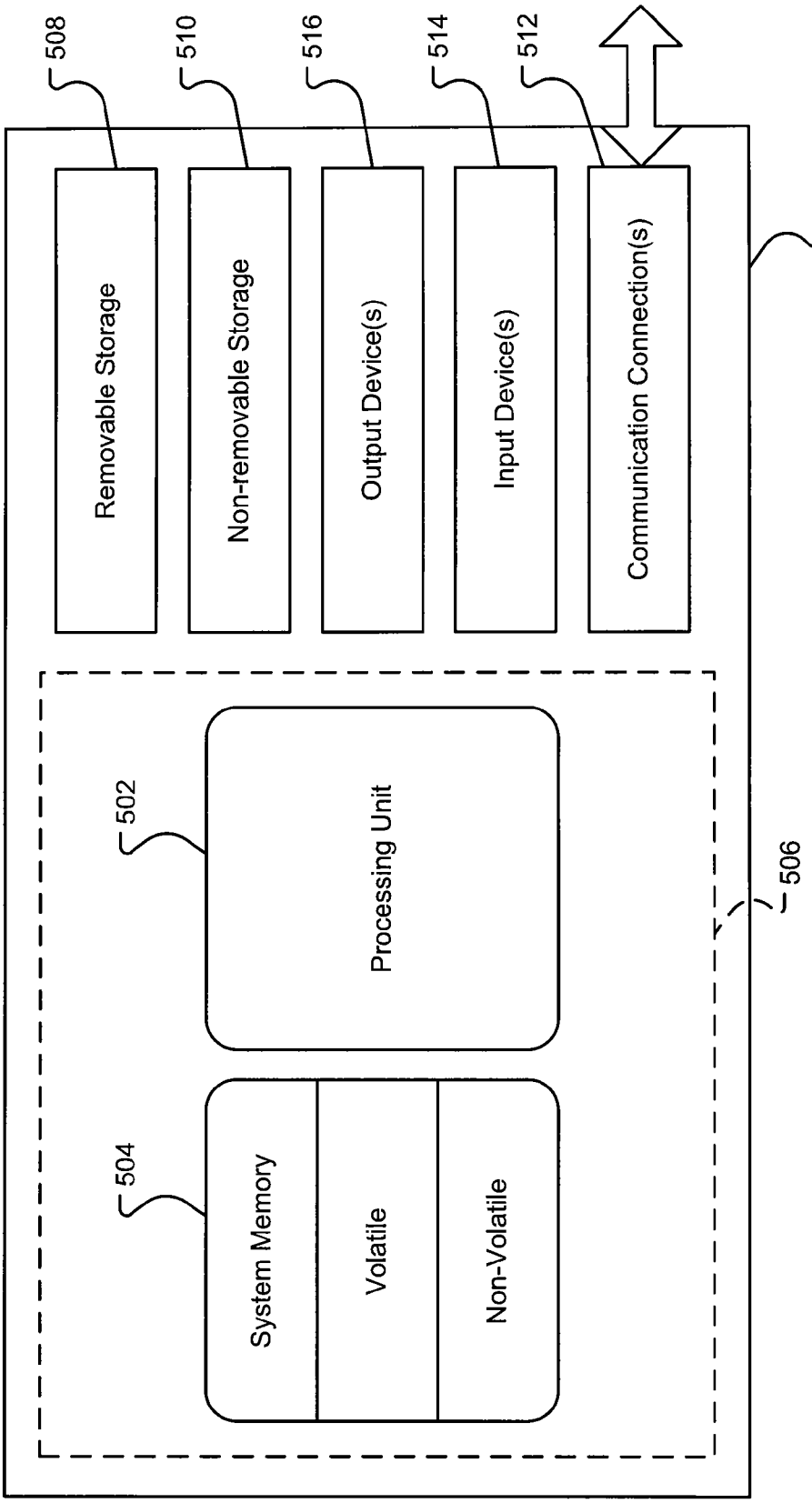

Fig. 9

Petitioner's Exhibit 1012
VIVITRO v. BDC
IPR2024-00320

FATIGUE TESTING SYSTEM FOR PROSTHETIC DEVICES

CROSS REFERENCE TO RELATED APPLICATIONS

This application claims the benefit of priority pursuant to 35 U.S.C. §119(e) of U.S. provisional application No. 61/158,185 filed 6 Mar. 2009 entitled "Apparatus and method for fatigue testing of prosthetic valves," which is hereby incorporated herein by reference in its entirety.

TECHNICAL FIELD

The technology described herein relates to systems and methods for fatigue testing of prosthetic devices, in particular, but not limited to, prosthetic vascular and heart valves, under simulated physiological loading conditions and high-cycle applications.

BACKGROUND

Prior prosthetic valve testing apparatus and methods typically use a traditional rotary motor coupled with mechanisms to produce regular sinusoidal time varying pressure field conditions. To accurately simulate physiologic conditions and/or produce a more desirable test condition, especially at accelerated testing speeds, a non-sinusoidal time dependent pressure field may be desired. This is not easily accomplished with a mechanistic approach. Furthermore, current systems employ a flexible metallic bellows or conventional piston and cylinder as drive members to provide the pressure actuation. Flexible metallic bellows are not ideal because they require high forces to operate and resonate at frequency, necessitating the use of larger driving systems and limiting the available test speeds. Piston and cylinder arrangements are not ideal because the seals employed in these systems are subjected to fiction and thus have severely limited life in high cycle applications.

The information included in this Background section of the specification, including any references cited herein and any description or discussion thereof, is included for technical reference purposes only and is not to be regarded subject matter by which the scope of the invention is to be bound.

SUMMARY

A design for a fatigue testing system for cyclic, long-term testing of various types of prosthetic devices (e.g., cardiac valves, vascular valves, stents, atrail septal defect technologies, vascular linings, and others) is designed to impart a repeating loading condition for the test samples during a test run. However, the system is also designed to be variable in its abilities so it can accurately test multiple technologies. Thus, the system may be variably configured depending upon the device being tested to impart a particular loading profile to repeatedly expose the prosthetic device being tested to desired physiological loading conditions during a testing run. The purpose is to simulate typical or specific physiologic loading conditions on a vascular or heart prosthetic valve, or other prosthetic technology, at accelerated frequency over time to determine the efficacy, resiliency, and wear of the devices.

Fatigue testing is accomplished by first deploying the prosthetic device in an appropriately sized sample holder, e.g., a rigid or flexible tube, canister, housing or other appropriate structure for holding the device being tested. The sample holder is then placed between two halves of a test chamber that together form a reservoir for a working fluid. The test chamber is in turn mounted to a drive system. The sample holder and valve being tested are then subjected to physiological appropriate conditions which may include: pressure, temperature, flow rate, and cycle times.

An implementation of a drive system for the fatigue testing system may include a linear actuator or magnetic-based drive motor coupled to a flexible rolling diaphragm. The drive system is coupled to a lower opening in the test chamber and is in fluid communication with the fluid reservoir in the test chamber. The flexible rolling diaphragm (or "rolling bellow") is reciprocally moveable to pressurize and depressurize fluid and interacts with the lower section of the fluid reservoir to provide a motive force to drive the working fluid through its cycles within the test chamber, including the sample holders.

Testing and test conditions are controlled by a control computer that permits both input of test conditions and monitors feedback of the test conditions during a testing run. Computer system control may be either an open loop control that requires user intervention in the event a condition falls outside pre-set condition parameters or a closed loop control system in which the computer monitors and actively controls testing parameters to ensure that the test conditions remain within the pre-set condition parameters.

The fatigue tester is capable of simulating physiologic conditions on prosthetic devices at an accelerated rate. The fatigue tester may also be configured to create either sinusoidal or non-sinusoidal pressure and/or flow waveforms across the prosthetic devices. Pressure waveforms may also be applied that produce a pre-defined pressure gradient over time to a prosthetic device being tested.

In one exemplary implementation, a device for simultaneous cyclic testing of a plurality of prosthetic devices is composed of a test chamber, a drive motor and a fluid displacement member. The test chamber is pressurizable and has a fluid distribution chamber with a first manifold defining a plurality of ports configured to receive and fluidicly couple with a first end of each of a respective plurality of sample holders. The fluid distribution chamber also defines an aperture in a lower face in fluid communication with a pressure source. The test chamber also has a fluid return chamber with a second manifold disposed opposite and spaced apart from the first manifold of the fluid distribution chamber. The manifold of the return chamber defines a plurality of ports configured to receive and fluidicly couple with a second end of each of the respective plurality of sample holders. A fluid return conduit both structurally and fluidily connects the fluid distribution chamber to the fluid return chamber. The test chamber also has a compliance chamber which provides a volume for holding a gas or an elastic material that compresses under a pressure placed upon fluid in the test chamber and allows fluid in the test chamber to occupy a portion of the volume. The drive motor is configured to operate cyclically, acyclically, or a combination of both. The fluid displacement member is connected with and driven by the drive motor to provide the pressure source that increases and decreases a pressure on fluid in the test chamber. In this manner, cyclic and acyclic fluid pressures may be maintained throughout the test chamber.

This Summary is provided to introduce a selection of concepts in a simplified form that are further described below in the Detailed Description. This Summary is not intended to identify key features or essential features of the claimed subject matter, nor is it intended to be used to limit the scope of the claimed subject matter. A more extensive presentation of features, details, utilities, and advantages of the present

Petitioner's Exhibit 1012
VIVITRO v. BDC
IPR2024-00320

invention is provided in the following written description of various embodiments of the invention, illustrated in the accompanying drawings, and defined in the appended claims.

BRIEF DESCRIPTION OF THE DRAWINGS

FIG. **1** is a combined isometric view and schematic diagram of an exemplary implementation of a fatigue testing system and a corresponding control system.

FIG. **2**A is a front elevation view of the fatigue testing system of FIG. **1**.

FIG. **2**B is an enlarged view of the motor support in the area surrounded by the circle labeled **2**B in FIG. **2**A.

FIG. **3** is a partial cross sectional view of a test chamber of the fatigue testing system taken along line **3-3** of FIG. **1**.

FIG. **4**A is an isometric view in cross section of a portion of the fatigue testing system if FIG. **1** detailing a flexible rolling diaphragm pump connected to a linear piston drive system in a down stroke position.

FIG. **4**B is an isometric view in cross section of a portion of the fatigue testing system if FIG. **1** detailing a flexible rolling diaphragm pump connected to a linear piston drive system in an upstroke position.

FIG. **5**A is an isometric view in cross section of a portion of the test chamber of the fatigue testing system detailing an isolation valve in an open position.

FIG. **5**B is an isometric view in cross section of a portion of the test chamber of the fatigue testing system detailing the isolation valve in a closed position.

FIG. **6** is a schematic diagram in cross section of an alternative implementation of a test chamber for use in a fatigue testing system.

FIG. **7** is a graph depicting three exemplary pressure control waves for generation by test control software to provide pressure across a sample device being tested.

FIG. **8** is a schematic diagram of a software and hardware implementation for controlling a fatigue testing system.

FIG. **9** is a schematic diagram of an exemplary computer system for controlling a fatigue testing system.

DETAILED DESCRIPTION

The system of the present invention generally includes a linear actuator or magnetic based drive coupled to a flexible rolling bellows diaphragm to provide variable pressure gradients across test samples mounted in a test chamber housing a fluid reservoir. These components operate together to act as a fluid pump and, when combined with a fluid control system, provide the absolute pressure and/or differential pressure and flow conditions necessary to cycle test prosthetic devices mounted in the test chamber. The flexible rolling diaphragm thrusts toward the lower section of the test chamber to provide a motive force to drive the working fluid through cycles within the test chamber. The flexible diaphragm is coupled to a lower opening in the test chamber and is reciprocally moveable to pressurize and depressurize fluid within the lower section of the main housing. The flexible rolling bellows diaphragm drive system has a very low inertia as compared to other drive systems, e.g., a metal bellows or a standard piston-in-cylinder drive. The flexible diaphragm is highly compliant with low resistance to axial deformation across its entire axial range of motion.

Plural sample holder tubes are coupled in parallel across the test chamber which has plural fluid distribution channels in communication with each of the sample holders. The lower distribution chamber of the test chamber has a single fluid reservoir in fluid flow communication with each of the plurality of sample holders. The distribution chamber includes a manifold with a plurality of fluid outlet ports, and each fluid outlet port communicates with an inflow opening of a test holder. The upper return chamber of the test chamber includes a similar manifold with a plurality of fluid inflow ports and compliance chambers. Each fluid inflow port communicates with an outflow opening of a respective sample holder. A central return flow channel is provided between the return chamber and the distribution chamber of the test chamber reservoir to provide a return flow of the working fluid from the outflow section of the sample holders. A throttle control and a check valve are disposed at the inflow and outflow ends of the central return flow channel, respectively, to regulate fluid flow during testing. The throttle control serves to partially regulate the pressure across the prosthetic devices being tested as well as the return flow of the working fluid in the fluid test chamber.

These components operate together to provide a differential pressure and flow conditions necessary to cycle the prosthetic device. The internal conditions, which may include, among other things, temperature, differential pressure, and system pressure, are electrically communicated to monitoring and controlling software on a test system computer. The motion of the fluid pump and therefore the system dynamics are controlled via test system control software. The pressure field resulting from the pump motion is easily controlled and can be set as a simple sine wave or as any complex user created waveform.

One exemplary implementation of a fatigue testing system **100** for any of a variety of prosthetic devices is depicted in FIGS. **1** through **5**B. The fatigue testing system **100** may be understood as having two primary components, a test chamber **106** and a drive motor **105**. The fatigue testing system **100** may be both partially mounted upon and housed within a base housing **157** formed and supported by a number of frame members **102**. In the implementation shown, the drive motor **105** is housed within the base housing **157** while the test chamber **106** is supported on a base plate **111** forming a top surface of the base housing **157**. The base housing **157** may be open on its sides or enclosed with removable panels as desired. A number of leveling feet **101** may be attached to the bottom of the base housing **157** to provide for leveling of the fatigue testing system **100** and thereby assist in creating consistent operating conditions across each of the multiple sample chambers of the fatigue testing system **100** as further described below.

In the embodiment shown in FIGS. **1** and **2**A with greater detail shown in FIG. **2**B, the drive motor **105** may be a linear motor. The linear drive motor **105** is mounted vertically on a motor stabilizer **104** and is centered underneath the test chamber **106**. The lower end of the drive motor **105** is supported by a spring **103** that interfaces with a horizontal foot **104***a* of the motor stabilizer **104** that extends underneath the linear drive motor **105**. A lower shaft extension **156** is attached to and extends downwardly from a thrust rod **108** of the linear drive motor **105**, through the spring **103**, and through a bearing-lined aperture in the foot **104***a* of the motor stabilizer **104** where it is secured on the underside of the foot **104***a* as shown in FIG. **2**B. The spring **103** is mounted concentrically about the lower shaft extension **156** and abuts the lower end of the thrust rod **108** of the linear motor **105** to support the weight of the thrust rod **108** of the linear drive motor **105** when the linear drive motor **105** is in an unpowered state. Further, in the event of a power failure during operation, the spring **103** prevents the thrust rod **108** from dropping quickly and causing an extremely large pressure gradient across test samples in the test chamber **106**, which could damage the test samples.

Petitioner's Exhibit 1012
VIVITRO v. BDC
IPR2024-00320

The upper end of the linear drive motor **105** is fixed to a motor support plate **109** that is in turn supported by several frame members **102** of the base housing **157**. An aperture in the motor support plate **109** provides for passage of the upper end of the thrust rod **108** for alignment and mechanical connection with components interfacing with the test chamber **106**. It should be noted that while a linear drive motor **105** is depicted in the figures, other types of motors, for example, a regular DC motor or a voice coil, may be used to offer alternate functionality than the linear drive motor **105** of desired for a particular prosthetic device. The number of cycles completed during a test session may be monitored by a cycle counter (not shown) that monitors the motion of the thrust rod **108** of the linear motor **105**, which may be affixed to the motor support plate **109**.

Several linkage components are provided between the drive motor **105** and the test chamber **106** as shown to best advantage in FIGS. **2**A and **3**. These components together form the drive member for creating a driving pressure on fluid in the system. An upper shaft extension **112** is fixed to and extends from an upper end of the thrust rod **108** and further extends axially within a cylinder **113**. The cylinder **113** is supported about the upper shaft extension **112** within an alignment collar **107**. The alignment collar **107** is further supported by a pair of alignment mounts **155** that are fixed to and extend upward from the motor support plate **109**. The alignment collar **107** ensures that the cylinder **113** and the drive motor **105** maintain axial alignment.

A central aperture in the bottom of the cylinder **113** receives the upper shaft extension **112**. This aperture in the bottom wall of cylinder **113** is lined with a bearing **162** to provide a low friction interface between the cylinder **113** and the upper shaft extension **112** as the upper shaft extension **112** moves within the cylinder **113** as further described below. A piston **114** in the shape of an inverted cylindrical cup may be mounted to the top of the upper shaft extension **112** for axial displacement within the cylinder **113** as the linear drive motor **105** drives the upper shaft extension **112** up and down.

The fluid drive member can be sized based on the volumetric requirements of the test chamber **106** or test samples. Depending on the volume displacement required for a particular application, the cylinder **113** and corresponding piston **114** may be swapped out for sizes of larger or smaller diameter. The cylinder **113** and corresponding piston **114** may thus be provided in a variety of diameters in order to provide different volume displacements for a given stroke, and thereby pressure differentials, within the test chamber **106** depending upon the type of sample being tested or the particular testing protocol being implemented.

The top edge of the cylinder **113** extends radially to form a flange **113***a* that interfaces with a bottom surface of a drive adapter **117**. The drive adapter **117** may also be provided in a variety of alternative different sizes to interface with different types of cylinders **113** of various diameters. Thus, corresponding drive adapters **117** and alignment collars **107** are similarly swapped for adjustment to the size of the cylinder **113**. For example, as shown in FIG. **3**, the aperture in the drive adapter **117** is shaped as a frustum with a wider upper mouth toward the test chamber **106** and walls that then taper to a smaller opening at the interface with the top of the cylinder **113**. In another embodiment with a larger diameter cylinder **113**, the drive adapter **117** may have a larger diameter lower opening defining more sharply angled sidewalls of the frustum-shaped aperture and, in some embodiments, might even be cylindrical to accommodate a larger cylinder **113** of a common diameter.

In one implementation, the fluid drive member has a flexible diaphragm drive system as illustrated in FIGS. **3**, **4**A, and **4**B. The diaphragm **115** may be a cap-like or cup-like member constructed of a non-reactive and flexible thin rubber, polymeric or synthetic based material. The flexible diaphragm **115** is highly compliant with low resistance to axial deformation across its entire axial range of motion within the cylinder **113** and the aperture in the drive adapter **117**. However, alternative configurations of the diaphragm **115** may be employed so long as the configuration is capable of low friction and low resistance to deformation under the influence of the piston **114**. The outer diameter of the sidewalls **114***a* of the piston **114** is slightly smaller than the inner diameter of the cylinder **113** to provide a uniform gap therebetween. The gap is designed to be large enough to allow the sidewall of the diaphragm **115** to fold in half against itself, i.e., evert, within this gap when the sidewalls **114***a* of the piston **114** are positioned within the sidewalls of the cylinder **113**. It may thus be noted that in operation flexible diaphragm **115** will operate as a rolling bellows when the linear drive motor **105** is actuated.

Many advantages of a low friction flexible diaphragm **115** as opposed to a rigid metallic bellows or traditional piston and cylinder drive may be appreciated. The lateral surfaces of the diaphragm **115** evert between the sidewalls **115***a* of the piston **115** and the sidewalls of the cylinder **113** as the piston **114** reciprocates within the cylinder **113** and drive adapter **117**. However, this eversion occurs with very low friction and low heat generation, and exerts very little resistance to piston **114** movement. As such, the drive motor can operate with a low driving force for either small or large displacements requiring low current draw and thus low energy expenditure. The flexible diaphragm **115** is highly compliant with low resistance to axial deformation across its entire axial range of motion. Alternative configurations of the diaphragm **115** may also be employed so long as the configuration is capable of very low fiction and very low resistance to deformation under the influence of the piston **114**.

The cup-shaped flexible diaphragm **115** is mounted on top of the piston **114**. The end wall of the diaphragm **115** is held against the top of the piston **114** by a rigid, disk-shaped cap **116**, which is fastened to the upper shaft extension **112** via fastener **158** (e.g., a set screw threaded within the upper extension shaft **112**). A flange surface **115***a* extends radially outward and circumferentially around the opening to the cavity of the cup-shaped diaphragm **115**. This flange surface **115***a* is sandwiched between the flange surface **113***a* of the cylinder **113** and the bottom surface of the drive adapter **117** to maintain a pressure seal between the test chamber **106** and the drive components. In view of FIG. **3**, the tapering of the frustum-shaped wall defining the aperture in the drive adapter **117** to an opening of comparable diameter to the diameter of the sidewalls forming the cylinder **113** becomes apparent, i.e., the need for corresponding surfaces between the flange of the cylinder **113** and the bottom surface of the drive adapter **117** to retain the flange surface **115***a* of the diaphragm **115**.

A top surface of the drive adapter **117** is fastened to a plenum **118** that defines a center cylindrical aperture aligned coaxially with the aperture of the drive adapter **117** and the cavity defined by the cylinder **113**. As shown in FIGS. **4**A and **4**B, a plurality of ports may be defined within the sidewall of the plenum **118** to provide fluid fill, drainage, or other functionality within the linkage components below the test chamber **106**. For the sake of clarity, the plenum **118** shown in FIG. **3** depicts only a single sidewall port **143** that, in this embodiment, is used as a fluid inflow port. However, additional ports may be defined within the plenum **118** if desirable (see, e.g., FIGS. **4**A and **4**B). If not in use for a particular test configu-

Petitioner's Exhibit 1012
VIVITRO v. BDC
IPR2024-00320

ration, the sidewall ports **143** in the plenum **118** may be plugged. The plenum **118** may be of constant diameter to interface with an aperture in the base plate **111** of the base housing **157**. For this reason it can now be understood why in some embodiments the opening in the top surface of the drive adapter **117** may be of a larger diameter than the opening in the bottom surface of the drive adapter **117** as the drive adapter **117** mates with a constant diameter plenum **118** in contrast to a variable diameter cylinder **113**.

As previously indicated, the test chamber **106** sits atop of the base plate **111** on the base housing **157**. The foundation of the test chamber **106** may in some embodiments include a gate guide plate **120** that also defines a central aperture that is coextensive in diameter with and concentrically aligned with the aperture in the base plate **111**. A distribution chamber **126** is supported by the gate guide plate **120**. The gate guide plate **120**, the distribution chamber **126**, and the base plate **111** may all be fastened together via bolts (not shown) extending upward from the underside of the base plate **111**. A pair of gate seals **160** may be positioned between the gate guide plate **120** and the distribution chamber **126**. The gate seals **160** may be a set of stacked O-rings surrounding the central apertures in the gate guide plate **120** and the distribution chamber **126**. The gate seals **160** may be slightly recessed within corresponding annular grooves formed in a bottom surface of the distribution chamber **126** and a top surface of the gate guide plate **120**.

A shallow flat channel **159** of a width at least slightly greater than the diameter of the gate seals **160** may be formed to extend radially from the center aperture within the top surface of the gate guide plate **120**. A flat rectangular knife or gate valve **119**, shown to best advantage in FIGS. **5**A and **5**B, may be positioned within the channel in the gate guide plate **120**. The gate valve **119** is shown in a radially withdrawn, open position in FIG. **5**A, such that there is an open passage between the center apertures defined within the gate plate **120** and the distribution chamber **126**. In this position, the gate seals **160** press against each other to create a fluid tight seal about the central apertures.

In a closed state as depicted in FIG. **5**B, the gate valve **119** is pushed radially inward such that the flat plate forming the gate valve **119** extends completely across the center apertures and is sealed between the gate seals **160** to fluidically separate the gate guide plate **120** and the linkage elements below it from the rest of the test chamber **106** above it. Closure of the gate valve **119** thus allows for easy maintenance of the drive motor **105** or the piston driver **114** (e.g., replacement of the flexible bellows diaphragm **115**) without having to drain the test chamber **106**.

As previously noted, the distribution chamber **126** is positioned on top of the gate guide plate **120**. The distribution chamber **126** defines a much wider but shallow cavity with an interior bottom wall that slants radially inward until it reaches a common diameter with the aperture of the gate plate **120**. In this embodiment, one or more resistive heaters **130** may be embedded within the bulk of the distribution chamber **126** underneath the fluid cavity defined by distribution chamber **126**. In one embodiment a separate heater **138** may be located immediately beneath each sample holder **129** (as further described below) to aid in the uniformity of heat distribution within the fluid in the test chamber **106**.

A distribution chamber manifold **153** is mounted to a top surface of the distribution chamber **126**, for example, by bolting the two surfaces together about the perimeter. The distribution chamber manifold **153** may form a conical diverter surface **122** that extends downward into the cavity of the distribution chamber **126**. A center bore **164** extends through the distribution chamber manifold **153**, including through the diverter **122**. This center bore forms part of a return flow path **128** as further described below. The distribution chamber manifold **153** may further define a plurality of bores **166** spaced about the perimeter of the distribution chamber manifold **153**. In the embodiment shown in FIGS. **1** through **3**, eight perimeter bores **166** are defined at a uniform radial distance from the center and are equiangularly spaced apart. However, in alternative embodiments, there may be greater or fewer perimeter bores **166** and different or non-uniform spacing may be implemented if desired. A sample inlet tube **147** forming the bottom half of a sample holder **129** is connected within and seals against each of the perimeter bores **166** of the distribution chamber manifold **153**.

Similarly, a lower conduit wall **124**(**2**) of a telescoping center conduit **124** mounts within and seals against the center bore **164** in the distribution chamber manifold **153**. A one-way valve **127** or similar check valve is positioned within the center bore **164** of the distribution chamber manifold **153** below the lower conduit wall **124**(**2**) of the center conduit **124**. The second half of the center conduit **124** is formed as a cylindrical upper conduit wall **124**(**1**) with an inner diameter substantially the same as an outer diameter of the lower conduit wall **124**(**2**) such that the center conduit **124** can be expanded or contracted in length. One or more center seals **161**, for example, in the form of O-rings mounted within annular recesses in the outer surface of the lower conduit wall **121**(**2**) provide a fluid tight seal interface with the interior surface of the upper conduit wall **124**(**1**).

Each of the sample holders **129** is also composed of a sample outlet tube **148** that sits atop a respective sample inlet tube **147**. The actual test sample **130** (e.g., a prosthetic device) may be sandwiched between the sample inlet tube **147** and sample outlet tube **148** to hold it in place within the test chamber **106**. In other embodiments (not shown) each of the sample holders **129** may be an integral unit with a test sample **130** mounted within by any of a variety of means that may be specific to the nature of the particular test sample **130**.

A return chamber manifold **154** is positioned atop each of the sample outlet tubes **148** and the upper conduit wall **124**(**1**) of the center conduit **124**. The return chamber manifold **154** defines corresponding perimeter bores **167** for mating with each of the sample outlet tubes **148** and a center aperture **165** for mating with the upper conduit wall **124**(**1**) of the center conduit **124**. Each of the interfaces between the sample outlet tubes **148** and the center conduit **124** with the return chamber manifold **154** is configured to provide a fluid tight seal between the components.

A return chamber **136** is mounted on top of the return chamber manifold **154** in a similar manner as the distribution chamber **126** is mounted to the distribution chamber manifold **153**. The return chamber **136** defines one or more compliance chambers **135** which, in the embodiment of FIGS. **1**-**3**, are composed of cavities associated respectively with each of the sample holders **129**. As used herein, "compliance" refers to the ability of the cavities forming the compliance chambers **135** to absorb some of the pressure placed upon the fluid in the test chamber **106** and further to control recoil toward the original volume dimensions upon removal of the compressive force. The compliance chambers **135** assist in minimizing the effects of large and quickly changing pressure gradients across test samples **130** placed within the test chamber **106**. In some implementations, the compliance chambers **135** may merely contain air or another gas. The air or other gas may be indirect contact with the working fluid in the test chamber **106** or a membrane may be provided within the compliance chambers **135** to separate the air or gas from the working fluid. In

Petitioner's Exhibit 1012
VIVITRO v. BDC
IPR2024-00320

other embodiments, the compliance chambers **135** my house a porous material or an elastomeric material. In each case, the purpose of the compliance chambers is to act as a resilient spring force to dampen the effects of large, quickly changing pressure gradients within the test chamber **106**.

The return chamber **136** further defines separate return conduits **168** that are in fluid communication with respective pairs of the sample holders **129** and compliance chambers **135**. A respective throttle valve **132** is housed within the return chamber **136** and placed between each respective return conduit **168** and a central return basin **133** that empties into the center return conduit **124**. Each of the throttle valves **132** may be operably raised or lowered to restrict or enlarge the fluid flow passage between the return conduits **168** and the central return basin **133** and assist in the regulation of the pressure across the test samples **130** in the sample holders **129**.

The return chamber **136** may also define a number of bores variously in communication with the return conduits **168**, the compliance chambers **135**, the central return basin **133**. For example, system input bores **121** may be provided for relatively direct access to each of the sample holders **129** via the return conduits **168**. The system input bores **121** may be used for a variety of purposes, for example, for the placement of sensing or diagnostic equipment or for access to the test samples **130** in the sample holders **129**. In a particular example, when testing a valve design with removable valve leaflets, the system input **121** could be used to access the sample holder **129** and remove and replace the valve leaflets while leaving the permanent valve mounting structure in place within the sample holder **129**. This obviates the need to disassemble the test chamber **106** for replacement of components of the test samples **130**.

An access port **125** may also be associated with each of the compliance chambers **135**. The access port **125** may be used for the attachment and introduction of sensing equipment or for providing additional air or gas pressurization to the compliance chambers **135**. Additional sensors may further be placed in access ports positioned for communication with the central return basin **133**. For example, as shown in FIG. **3**, a temperature transducer **139** and a water level sensor **144** may be placed in communication with the central return basin **133**. It should be understood that any number of other sensor devices could also be placed in contact with or introduced within the test chamber **106** by any of the various apertures, bores, or ports provided within the return chamber **136**.

The various sensors of the fatigue testing system **100** may be operably connected to a data acquisition (DAQ) device **141**. An amplifier and control system **140** may also be connected with the drive motor **105** to provide output control of the same. In some embodiments, the DAQ device **141** and amplifier/control system **140** may be mounted within the base frame **157**. An air source **131** connected in line with a pressure regulator **134** may also be under control of the control system **140**. These components are, in turn, either directly or indirectly operably connected to a microprocessor-based computer **142**. All systems may also be connected to an uninterrupted power supply (UPS) **143**.

Software provided on the computer **142** can direct the system controller **140** to provide full closed-loop control based on feedback measurements received from the DAQ device **141** coupled with the sensors. In one example of this functionality, software may be configured to control the driving amplitude and velocity of the drive motor **105** based upon differential pressure transducer feedback. The system **100** may therefore compensate for any changes during the high cycle testing cycle providing the test samples **130** with the most optimal testing conditions. An automated test interface may be provided as part of the fatigue testing system **100** to run the test chamber **106** without direct management, ensuring proper testing conditions and safety mechanisms. The test interface may be configured to provide closed-loop control based off any system measurement feedback.

An implementation of operation of the exemplary fatigue testing system **100** of FIGS. **1-5**B may be understood as follows. Initially, test samples **130** need to be placed within the test chamber **106**. In order to introduce test samples **130**, the sample holders **129** must be accessed. The adjustment nuts **146** on the top of the return chamber **136** may be rotated to raise the adjustment posts **145** from their tightened positions within the distribution chamber manifold **153** and distribution chamber **126**. Once the return chamber **136** and return chamber manifold **154** are raised, the sample holders **129** may be removed and replaced with alternate sample holders or, as shown in this embodiment, samples positioned between sample inlet to **147** and sample outlet to **148**, may be removed and replaced with new samples **130**. The adjustment nuts **146** may then be tightened to lower the return chamber **136** and return chamber manifold **154** back into contact with the sample holders **129** to create fluid-tight flow path through each of the sample holders **129** between the distribution chamber **126** and the return chamber **136**. Note that when the return chamber **136** and return chamber manifold **154** are raised, the center conduit **124** telescopes upward with the upper conduit wall **124**(**2**) sliding along the exterior of the lower conduit wall **124**(**1**), thus maintaining a fluid-tight connection within a center conduit **124**.

In many applications, it may be desirable to monitor the pressure gradient across the sample holder **129**. For such purposes, a conduit with a sensing device, for example, a pressure transducer, may be placed in a conduit that is attached at one end to a monitor outlet port **149** in the sample inlet tubes **147** and a monitor inlet port **150** on the sample outlet tubes **148**. In an alternative implementation, individual sensors (e.g., pressure transducers) may be attached directly to each of the monitor outlet ports **149** and monitor inlet ports **150** to measure absolute pressure at each of these locations. The absolute pressure data may be collected by the data acquisition component **141** and transferred to the computing device **142** for calculation of the pressure differential by taking the difference between the absolute pressure values on either end of the sample holders **129**.

Presuming that the correct size of cylinder **113** and corresponding drive adaptor **117** are already attached, the fatigue testing system **100** may be charged with the desired type and amount of working fluid through any one of the inflow ports **143** in the plenum **118**. The working fluid may be water, saline, a saline/glycerin solution, a glycerin/water solution, a blood analog or substitute, or other type of fluid. In some embodiments, the working fluid may be selected to simulate one or more attributes of human blood, such as density, viscosity or temperature. For example, in certain instances, physiological saline which does not simulate the viscosity of blood, but simulates density, may be used. In other cases saline/glycerin solution may be employed to simulate blood viscosity.

Depending upon the particular test samples **130** and desired testing conditions and dynamics, the fatigue system **100** may be filled with fluid up to an appropriate or desired level in the compliance chambers **135**. Once fluid has been filled to a desired level, in some scenarios, the fatigue testing system **100** may be additionally pressurized with air or another gas via an air source **131**, e.g., an air compressor or sealed pressurized volume, connected to the air inlet **152** in

Petitioner's Exhibit 1012
VIVITRO v. BDC
IPR2024-00320

the return chamber **136** or via the compliance access ports **125** in the compliance chambers **135**. In some embodiments, a pressure regulator **134** may be interposed between the air source **131** and the air inlet **152** to regulate the pressure within the test chamber **106**. Alternatively, the system **100** can be pressurized by first sealing the system **100** and then changing the position of the fluid driving piston **114** such that the available volume is decreased.

The working fluid temperature is controlled via the fluid heaters **138** and the temperature transducer **139**. Upper and lower temperature bounds may be set in the test software. At startup the system **100** will begin to heat until the upper bound is reached. As the input temperature falls below the lower bound, the heaters **138** are again activated, thus maintaining a mean temperature within acceptable bounds. This mean temperature is typically set to 37° C. to simulate physiologic conditions.

Once the system is filled with fluid, heated, and properly pressurized, testing operations under control of the computer **142** may be initiated. The computer **142** may control the operations of the linear drive motor **105** to move the piston **114** and thus the diaphragm **115** up and down within the cylinder **113** and drive it after **117** to cyclically increase and decrease the pressure within the test chamber **106**. Under computer control and depending upon the size of the cylinder **113**, the linear drive motor **105** may cause the thrust rod **108** and the attached upper shaft extension **112** to move up and down thereby moving the cylinder **113** and diaphragm **115** up and down to create a displacement of any size, small or large, to change the pressure within the test chamber **106**. The rolling or eversion of the diaphragm **115** exerts very little resistance to piston **14** movement. Thus, power requirements on the linear drive motor **105** are small and current draw is minimized.

Fluid flow **110** through the test chamber **106** is indicated by the dashed lines initiating at the drive adaptor **117** traveling through the plenum **118** and then through the sample holders **129** to exit through the return conduit **168**, the central return chamber **133**, and the center conduit **124**. Fluid flow can be prevented from moving upward in the center conduit **124** by the one-way valve **127** housed within the distribution chamber manifold **153**. The conical diverter **122** helps direct fluid flow from the piston **114** regularly and uniformly to each of the sample holders **129** about the perimeter of the test chamber **106**.

The compliance chambers **135** provide excess volume area for fluid to move into when the piston **114** performs a compression stroke. As the pressure of the gas in the compliance chamber **135** increases, the volume occupied by the gas decreases to provide additional volume for displacement of the liquid working fluid within the test chamber **106**. The throttle valves **132** restrict the rate of return flow of fluid within the test chamber **106** into the central return basin **133**. The combination of the compliance chambers **135** and the throttle valves **132** help control undesirable pressure loading or pressure spikes within the sample holder **129** and consequent adverse effects on the test samples **130** when the piston **114** moves in a decompression stroke. The compliance chambers **135** and the throttle valves **132** also generally help tune the test conditions across the sample holder **129**. In addition to selecting the piston size, the displacement range, frequency, and waveform settings, the system equilibrium pressure, and other settings, the compliance chambers **135** and the throttle valves **132** may be adjusted as an additional aid in fine-tuning appropriate differential pressure across the test samples **130** in the sample holder **129**.

As the piston **114** moves downward in decompression stroke, pressure on the one-way valve **127** is released and fluid flow through the center conduit **124** is initiated at a controlled rate depending upon the position of the throttle valves **132**. In this way, on the downward stroke, the pressure in the test chamber **106** returns to an initial level and excess volume returns to the compliance chambers **135**. It should be noted that the compliance chambers **135** may be configured in a variety of different ways. In addition to merely containing a volume of air or other gas to act as an air spring, a membrane could be provided between the liquid and the air or other gas or alternatively the space could be filled with a porous foam or other elastomeric material, thereby reducing or otherwise adjusting the spring factor provided by the compliance chamber **135**.

The dynamics of the system **100** can be controlled through the stroke pattern, frequency, and volume of the piston **114**, the flow setting of the throttle valves **132**, and the spring force of the compliance chambers **135**. Additionally, the working fluid in the test chamber **106** may be preset to a base or ambient pressure using a separate pressure source. For example, an air/gas source **131** (e.g., and air compressor or gas tank) may be connected to and pressurize a fluid reservoir (not shown) in fluid contact with the working fluid in the test chamber **106**. A pressure regulator **134** may be positioned between the air source **131** and the introduction into the test chamber **106** for controlling the desired system pressure. Alternatively, a pressurized gas may be introduced directly into the compliance chambers **135** through access ports **125**, into the central return basin **133** through inlet **152**, or through any other port (e.g., one of the sidewall ports **143** in the plenum **118**) for charging the test chamber to an appropriate base pressure for proper function of the system **100** for the particular test configuration.

An alternate embodiment of a test chamber **206** for a fatigue testing system **200** is shown in FIG. **6**. The test chamber **206** consists generally of a lower chamber composed of a distribution chamber **226**, a flow conditioning chamber **272**, and a manifold **253**, and an upper chamber composed of a return chamber **236**, a manifold **254** and a central compliance chamber **235**. A fluid flow pathway **210** extends from the lower chamber to the upper chamber which passes through a plurality of sample holders **229** holding the device samples **230** being tested and a return fluid flow pathway **228** extends from the upper chamber to the lower chamber to return fluid from the upper chamber to the lower chamber in preparation for a following cycle. A check valve **227** is inline with the return fluid flow pathway **228** between the upper and lower chambers to regulate back flow through the test chamber **206**. A controllable central throttle valve **232** is also in-line with the upper and lower chambers to regulate the differential pressure across the test samples **230** during operation.

The fluid drive member, i.e., the piston **214**, is provided within the cylinder **213** to pressurize and drive the working fluid upward through the drive adapter **217** and the plenum **218**. The piston **214** is mounted on the shaft extension **212** extending through the bearing **262** from the thrust rod of the linear motor (not shown). The flexible diaphragm is mounted on the piston **214** as in the prior embodiment and held in place by a cap **216**. The diaphragm **15** is preferably a cap-like member constructed of a non-reactive and flexible thin rubber, polymeric or synthetic based material. The lateral surfaces of diaphragm **215** roll or evert as the piston **214** reciprocates within the cylinder **213** and drive adapter **217** between which the circumferential flange of the diaphragm is sealed. These components are affixed to the support plenum **218** and maintain the pressure seal along the circumference of the

Petitioner's Exhibit 1012
VIVITRO v. BDC
IPR2024-00320

diaphragm **215**. The plenum **218** serves as a mounting point for the drive system. The plenum **218** may also include fluid ports for pressure monitoring and system draining.

During the primary or pressurization portion of a test cycle, the piston **214** moves in a positive direction toward the test chamber **206** and creates an initial pressurization and the working fluid flows up through the base plate **211** into the distribution chamber **226**. The working fluid impinges upon a generally conical flow baffle **222** and is directed radially outward to flow straighteners **271**. The fluid is blocked from entering the central return conduit **224** by a one-way exit valve **227**. The working fluid then passes from the distribution chamber **226** and into a flow conditioning chamber **272**, wherein it passes through a flow straighteners **271**, aligning the flow along the axis of the sample holders **229**. Sample adapters **247**, **248** attach the sample holders **229** to the distribution manifold **253** and the return manifold **255**, allowing the sample holders **229** to be connected to the test chamber **206** in a leak free manner.

A collateral pressure-sensing conduit **269** may be coupled to the sample holder **229** and direct a fluid flow pathway toward a pressure transducer **270** that serves to monitor the differential pressure gradient across the test sample **330** within the sample holder **229**. The differential pressure transducers **270** monitor the pressure field across each test sample **230** in the sample holders **229** during the testing cycle. Flexible or rigid tubing **269** is connected to the upper and lower sample adapters **247**, **248**, with the opposite ends of the conduit **269** being connected to the differential pressure transducer **270**. Additional monitoring transducers can be introduced through the sensor ports **221** and other ports built into the return chamber **236** as necessary.

Once the fluid flow has exited the sample holders **229** it flows into the return manifold **254** and return chamber **236**. The working fluid passes around a throttle valve **232** and a return fluid flow is communicated through return conduit **224** to the lower chamber during a secondary or depressurization portion of the test, thus completing the first portion of the test cycle. The throttle valve **232** is connected to the throttle valve handle **232***a*, which runs through a fluid-tight fitting on top of compliance chamber cap **221**. The throttle valve handle **232***a* is adjustable, such as by a threaded coupling to the cap **221** on the compliance chamber **235**. The throttle valve **232** can be adjusted up or down, increasing or decreasing the resistance to fluid returning to the central return conduit **224** to aid in controlling the differential pressure across the test sample **230**. The amount of gas or the elasticity of the elastomeric material inside the compliance chamber **35** allows the user to control the damping of the system and provides an additional tool calibrate the ideal test conditions for the particular prosthetic device. In the embodiment of FIG. **6**, a single compliance chamber **235** is axially centered over the test chamber **206** and provides a compliance volume for all of the sample holders **230** in the test chamber **235**. Similarly, in this embodiment only a single throttle valve **232** is provided to control the return flow of the working fluid through the center return conduit **224**.

FIG. **7** provides examples of three different pressure control signals generating three different cyclical pressure waveforms **300** across a prosthetic device being tested. Because of the vertical orientation of the displacement components, the term "upstroke" is synonymous with a pressurization stroke of the piston, i.e., that which exerts a positive pressure across the prosthetic device being tested and the term "down stroke" is synonymous with a depressurization stroke of the pump, i.e., that which exerts a negative pressure across the prosthetic device being tested. Typical test systems are only capable of driving the fluid with a regular sine wave **306**. A non-regular pressure waveform may be desirable for testing of certain devices as it allows the user to control the rate of pressurization in the test system and optimize the test conditions, while maintaining a desired operating frequency. Two exemplary non-regular waveforms having short upstrokes **308** and down strokes **310**, respectively, are illustrated in FIG. **7**. However, any arbitrary pressure waveform may be generated and can be utilized to drive the motor and thereby the piston.

During the primary or pressurization portion **302** of the testing cycle, fluid is moved past the prosthesis within the housing tube. In an exemplary implementation in which valve prostheses are tested, the positive upstroke forces the valve prosthesis to the open state. During a secondary or depressurization portion **304** of the test cycle, the flow is reversed and the valve prostheses **30** are closed. As the secondary portion **304** of the cycle begins, the fluid moves through the throttle valves into the central return conduit and back into the distribution chamber through the one-way valve. During return flow, the valve prosthesis remains closed due to the flow reversal and differential pressure present between the distribution chamber and the return chamber. The drive system returns to its starting position and the process is repeated, cycling the prosthetic devices. A single test cycle consists of completion of both the primary portion **302** and secondary portion **304** of the test cycle such that the prosthetic device passes through one open and closed cycle.

The exemplary pressure waveforms **306**, **308**, **310** depicted in FIG. **7** may be generated by the fatigue testing system or by other mechanical mechanisms. It is envisioned that alternative mechanical or electromechanical systems, such as those including gearing or cams to drive a pump, may be employed in a manner that generates the variable pressure waveforms as depicted in FIG. **7**, in which the pressure gradients are variable over time.

As indicated above, the proposed technology may be integrated with system monitoring and controlling software. The computer software can be used to record and analyze data while controlling the dynamics of the system, as outlined in the exemplary process **400** shown FIG. **8**. Data is first obtained by system hardware **402**, i.e., the system sensors **406**, and then processed though data acquisition hardware **408** and transmitted to the system computer for processing and formatting for presentation by the system software **404**.

All system inputs and outputs may be continuously monitored and directed into software-based control and alarm system modules, allowing the system to automatically reconfigure or halt if any signal deviates outside of the user set bounds. The real-time data stream may be utilized for three primary purposes: data logging and graphing, alarm condition indication, and test system control. The data logging and plotting subroutine **410** generates graphs and plots of pertinent signals while also creating a data file to allow for test documentation and off-line analysis.

The alarm condition subroutine **412** analyzes data to determine if any of the test inputs or control signals have deviated outside of user defined alarm magnitudes. If an alarm is triggered, i.e. an alarm parameters exceeds its bounds as determined in operation **414**, an alarm sequence is initiated as indicated in operation **416**. This sequence could trigger a number of events. In one sequence, the software may halt the test system in a specific manner; in another alarm sequence, the test software may notify the operator; in yet another alarm sequence, the system may be halted and the user notified. As can be appreciated, there are a number of actions that are available as part of an alarm sequence and these sequence

Petitioner's Exhibit 1012
VIVITRO v. BDC
IPR2024-00320

steps could be dependent on a number of parameters including the specific test samples and/or the specific test protocol.

The control loop subroutine **418** further monitors the control parameters based on a user defined target input signals and/or parameters. Exemplary user set parameters may include pressure input parameters **428** and motor drive waveform parameters **430**. Each of these parameters may be set as static or variable. If the control loop determines that the real-time sensor data received is outside the bounds of the user parameters as determined in operation **420**, then the software adjusts the input control parameters provided to the hardware control systems as indicated in operation **422**. As one example, test system pressure may be set as the control parameter; therefore, the software will continually adjust the dynamics of the pressure regulator **424** to maintain the desired pressure. In another example, the displacement of the driver may be the control parameter; therefore, the software will continually adjust the system dynamics for the motor control **426** to maintain the desired displacement. Again, as one can appreciate, the closed-loop control of the test system can be applied to myriad parameters.

FIG. **9** illustrates an exemplary computer system **500** configured as part of the fatigue testing system as described herein. In one implementation, the computer system **500** typically includes at least one processing unit **502** and memory **504**. Depending upon the exact configuration and type of the computer system **500**, the memory **504** may be volatile (e.g., RAM), non-volatile (e.g., ROM and flash memory), or some combination of both. The most basic configuration of the computer system **500** need include only the processing unit **502** and the memory **504** as indicated by the dashed line **506**.

The computer system **500** may further include additional devices for memory storage or retrieval. These devices may be removable storage devices **508** or non-removable storage devices **510**, for example, memory cards, magnetic disk drives, magnetic tape drives, and optical drives for memory storage and retrieval on magnetic and optical media. Storage media may include volatile and nonvolatile media, both removable and non-removable, and may be provided in any of a number of configurations, for example, RAM, ROM, EEPROM, flash memory, CD-ROM, DVD, or other optical storage medium, magnetic cassettes, magnetic tape, magnetic disk, or other magnetic storage device, or any other memory technology or medium that can be used to store data and can be accessed by the processing unit **502**. Alarm monitoring, data acquisition, and closed loop control software modules may be stored on the storage device for execution by the processing unit **502** using any method or technology for storage of data, for example, computer readable instructions, data structures, and program modules.

The computer system **500** may also have one or more communication interfaces **512** that allow the system **500** to communicate with other devices. The communication interface **512** may be connected with a network. The network may be a local area network (LAN), a wide area network (WAN), a telephony network, a cable network, an optical network, the Internet, a direct wired connection, a wireless network, e.g., radio frequency, infrared, microwave, or acoustic, or other networks enabling the transfer of data between devices. Data is generally transmitted to and from the communication interface **512** over the network via a modulated data signal, e.g., a carrier wave or other transport medium. A modulated data signal is an electromagnetic signal with characteristics that can be set or changed in such a manner as to encode data within the signal.

The computer system **500** may further have a variety of input devices **514** and output devices **516**. Exemplary input devices **514** may include sensors, a keyboard, a mouse, a tablet, and/or a touch screen device. Exemplary output devices **516** may include a display and speakers. Such input devices **514** and output devices **516** may be integrated with the computer system **500** or they may be connected to the computer system **500** via wires or wirelessly, e.g., via IEEE 802.11 or Bluetooth protocol. These integrated or peripheral input and output devices are generally well known and are not further discussed herein. Other functions, for example, handling network communication transactions, may be performed by an operating system in the nonvolatile memory **504** of the computer system **500**.

The technology described herein may be implemented as logical operations and/or modules in one or more systems. The logical operations may be implemented as a sequence of processor-implemented steps executing in one or more computer systems and as interconnected machine or circuit modules within one or more computer systems. Likewise, the descriptions of various component modules may be provided in terms of operations executed or effected by the modules. The resulting implementation is a matter of choice, dependent on the performance requirements of the underlying system implementing the described technology. Accordingly, the logical operations making up the embodiments of the technology described herein are referred to variously as operations, steps, objects, or modules. Furthermore, it should be understood that logical operations may be performed in any order, unless explicitly claimed otherwise or a specific order is inherently necessitated by the claim language.

In some implementations, articles of manufacture are provided as computer program products that cause the instantiation of operations on a computer system to implement the invention. One implementation of a computer program product provides a computer program storage medium readable by a computer system and encoding a computer program. It should further be understood that the described technology may be employed in special purpose devices independent of a personal computer.

All directional references (e.g., proximal, distal, upper, lower, upward, downward, left, right, lateral, longitudinal, front, back, top, bottom, above, below, vertical, horizontal, radial, axial, clockwise, and counterclockwise) are only used for identification purposes to aid the reader's understanding of the present invention, and do not create limitations, particularly as to the position, orientation, or use of the invention. Connection references (e.g., attached, coupled, connected, and joined) are to be construed broadly and may include intermediate members between a collection of elements and relative movement between elements unless otherwise indicated. As such, connection references do not necessarily infer that two elements are directly connected and in fixed relation to each other. The exemplary drawings are for purposes of illustration only and the dimensions, positions, order and relative sizes reflected in the drawings attached hereto may vary.

The above specification, examples and data provide a complete description of the structure and use of exemplary embodiments of the invention. Although various embodiments of the invention have been described above with a certain degree of particularity, or with reference to one or more individual embodiments, those skilled in the art could make numerous alterations to the disclosed embodiments without departing from the spirit or scope of this invention. Other embodiments are therefore contemplated. It is intended that all matter contained in the above description and shown in the accompanying drawings shall be interpreted as illustrative only of particular embodiments and not limiting.

Petitioner's Exhibit 1012
VIVITRO v. BDC
IPR2024-00320

Changes in detail or structure may be made without departing from the basic elements of the invention as defined in the following claims.

What is claimed is:

1. A device for simultaneous accelerated cyclic testing of a plurality of valved prosthetic devices comprising

a pressurizable test chamber further comprising

a fluid distribution chamber having a first manifold defining a first plurality of ports configured to receive and fluidicly couple with a first end of each of a respective plurality of sample holders and defining an aperture in a lower face in fluid communication with a pressure source;

a fluid return chamber having a second manifold disposed opposite and spaced apart from the first manifold of the fluid distribution chamber and defining a second plurality of ports configured to receive and fluidicly couple with a second end of each of the respective plurality of sample holders;

a fluid return conduit both structurally and fluidily connecting the fluid distribution chamber to the fluid return chamber; and

a compliance chamber providing a volume for holding a gas or elastomeric material that compresses under a pressure placed upon fluid in the test chamber and; allows fluid in the test chamber to occupy a portion of the volume;

a drive motor configured to operate cyclically, acyclically, or a combination of both; and

a fluid displacement member connected with and driven by the drive motor to provide the pressure source that increases and decreases a pressure on fluid in the test chamber; whereby cyclic and acyclic fluid pressures are maintained throughout the test chamber.

2. The device of claim **1** further comprising a plurality of sample holders, each configured to hold a respective prosthetic device, mounted between the first manifold of the fluid distribution chamber and second manifold of the fluid return chamber, and mounted within a respective pair of the first plurality of ports and the second plurality of ports, whereby the prosthetic device is placed in fluid communication with the distribution fluid chamber and the return fluid chamber.

3. The device of claim **1**, wherein

the compliance chamber comprises a plurality of compliance chambers formed as cavities within the fluid return chamber; and

a respective one of the plurality of compliance chambers is positioned substantially above each of the second plurality of ports and between each of the second plurality of ports and the fluid return conduit.

4. The device of claim **1** further comprising a one-way valve positioned within the fluid return conduit that prevents fluid flow through the fluid return conduit when the fluid displacement member increases pressure on fluid in the test chamber.

5. The device of claim **1**, wherein the fluid return conduit is positioned along an axial center of the test chamber.

6. The device of claim **1** further comprising a computer control system connected with the drive motor and a sensor positioned within the test chamber, wherein the computer control system is configured to operate one or more of the following:

an alarm module for alerting a user or arresting operation of the device upon receipt of data from the sensor that is outside a preset parameter; or

a closed loop feedback module for adjusting operation of the drive motor upon receipt of data from the sensor to maintain a pressure profile within the test chamber according to a preset parameter.

7. The device of claim **1** further comprising

a heater positioned in the test chamber for heating fluid within the test chamber; and

a temperature sensor positioned within the test chamber to measure temperature of fluid within the test chamber.

8. The device of claim **1**, wherein the fluid displacement member comprises a flexible diaphragm.

9. The device of claim **1**, wherein each of the sample holders defines a first port on a first side of a test sample position and a second port on a second side of the test sample position; wherein the first port and the second port are configured to receive one or more sensor devices.

10. The device of claim **9** further comprising a pressure transducer in fluid communication with the first port and the second port in one of the sample holders configured to measure a pressure gradient across a test sample positioned within the one of the sample holders.

11. The device of claim **1**, wherein the fluid return conduit further comprises

an inner conduit wall having an outer diameter and attached to one of the fluid distribution chamber or the fluid return chamber;

an outer conduit wall having an inner diameter larger than the outer diameter of the inner conduit and attached to the other of the fluid distribution chamber or the fluid return chamber, wherein the inner conduit call is received within the outer conduit wall; and

a seal member positioned between the inner conduit wall and the outer conduit wall to create a fluid-tight seal therebetween; wherein

the fluid return conduit is configured to telescopically lengthen or shorten.

12. The device of claim **11** further comprising a plurality of adjustment posts positioned between the fluid distribution chamber and the fluid return chamber and operable to adjust a separation distance between the fluid distribution chamber and the fluid return chamber.

13. The device of claim **1**, wherein the drive motor comprises a linear motor.

14. The device of claim **13** further comprising

a mounting structure connected to and supporting the linear motor in a vertically mounted position; and

a spring supported by the mounting structure, and interfacing with an end of a shaft of the linear motor extending from a lower end of the linear motor, wherein

the spring prevents the shaft from dropping downward from the linear motor when the linear motor is in an unpowered state.

15. The device of claim **1**, wherein the fluid displacement member further comprises a flexible rolling bellows connected to a shaft of the linear motor.

16. The device of claim **15** further comprising

a drive adapter coupled to the either directly or indirectly to the distribution chamber and in fluid communication with the aperture in the lower face of the fluid distribution chamber, wherein

the drive adaptor defines an aperture with an upper diameter congruent with a diameter of the aperture in the lower face of the fluid distribution chamber;

the rolling bellows is further attached to a piston connected to the shaft of the linear motor and the piston moves axially within a cylinder;

the cylinder defines an opening of a diameter that is substantially the same as a diameter of an end wall of the rolling bellows;

Petitioner's Exhibit 1012
VIVITRO v. BDC
IPR2024-00320

the cylinder is coupled to the drive adapter and a circumferential flange of the rolling bellows is held therebetween; and

the aperture defined in the drive adaptor has a lower diameter congruent with the diameter of the opening in the cylinder.

17. A test chamber for accelerated cyclic testing of a valved prosthetic device in a variable pressurized environment comprising

a fluid distribution chamber having a first manifold defining a first port configured to receive and fluidicly couple with a first end of a sample holder and a lower face defining an aperture for communicating with a fluid pressure source;

a fluid return chamber having a second manifold disposed opposite and spaced apart from the first manifold of the fluid distribution chamber and defining a second port configured to receive and fluidicly couple with a second end of the sample holder;

a fluid return conduit both structurally and fluidly connecting the fluid distribution chamber to the fluid return chamber; and

a compliance chamber providing a volume for holding a gas or elastomeric material that compresses under a pressure placed upon fluid in the test chamber; allows fluid in the test chamber to occupy a portion of the volume.

18. The device of claim **17**, further comprising a porous material at least partially filling the compliance chamber.

19. The device of claim **17**, further comprising an elastomeric membrane separating at least a portion of the compliance chamber from fluid in the fluid return chamber.

20. The device of claim **17**, wherein the compliance chamber is positioned substantially above the second port and between the second port and the fluid return conduit.

21. The test chamber of claim **17**, wherein the compliance chamber is defined as a cavity within the fluid return chamber.

22. The test chamber of claim **21**, wherein the fluid return chamber defines a port providing fluid communication between an outer surface of the fluid return chamber and the cavity forming the compliance chamber.

23. The test chamber of claim **17** further comprising a sample holder configured to hold a prosthetic device, mounted between the first manifold of the fluid distribution chamber and second manifold of the fluid return chamber, and mounted within the first port and the second port, whereby the prosthetic device is placed in fluid communication with the distribution fluid chamber and the return fluid chamber.

24. The device of claim **23**, wherein the sample holder defines a first port on a first side of a test sample position and a second port on a second side of the test sample position; wherein the first port and the second port are configured to receive one or more sensor devices.

25. A pressurization system for a fluid test chamber for accelerated cyclic pressure testing of a of a valved prosthetic device comprising

a linear drive motor that displaces a shaft in an axial direction;

a flexible elastomeric rolling bellows diaphragm connected with and driven axially by the shaft of the linear motor that cyclically increases and decreases a pressure on a fluid in the fluid test chamber; wherein active control of the linear drive motor provides an ability to create small and large fluid displacements with consequent variable effect of a fluid pressure of the fluid in the fluid test chamber.

26. The system of claim **25**, further comprising

a cylinder that defines an opening of a diameter that is substantially the same as a diameter of an end wall of the rolling bellows diaphragm; and

a piston connected to the shaft of the linear motor, wherein the end wall of the rolling bellows diaphragm is attached to the piston;

the piston and the end wall of the rolling bellows diaphragm move axially within the cylinder to create the fluid displacements.

* * * * *

Petitioner's Exhibit 1012
VIVITRO v. BDC
IPR2024-00320

UNITED STATES PATENT AND TRADEMARK OFFICE

CERTIFICATE OF CORRECTION

PATENT NO. : 8,627,708 B2
APPLICATION NO. : 12/718316
DATED : January 14, 2014
INVENTOR(S) : Benjamin McCloskey, Craig Weinberg and Steven Weinberg

It is certified that error appears in the above-identified patent and that said Letters Patent is hereby corrected as shown below:

In the Claims

Claim 1, in column 17, at line 20, “fluidily” should be “fluidicly”.

Claim 11, in column 18, at line 28, “call” should be “wall”.

Claim 16, in column 18, at line 55, please delete “to the”.

Claim 17, in column 19, at line 20, “fluidly” should be “fluidicly”.

Claim 25, in column 20, at line 17, please delete the second occurrence of “of a”.

Signed and Sealed this
Twentieth Day of January, 2015

Michelle K. Lee

Michelle K. Lee
Deputy Director of the United States Patent and Trademark Office

Petitioner's Exhibit 1012
VIVITRO v. BDC
IPR2024-00320