Test Equipment

TESTING SERVICES

SILICONE VESSELS

SIMULATION SOLUTIONS

Petitioner's Exhibit 1028
VIVITRO v. BDC
IPR2024-00320

BDC LABORATORIES

"BDC is a great, reliable contract laboratory. They exhibited great technical proficiency and tailored the test protocols to our specific samples. The customer service was exceptional as well. They worked with us to accommodate our timelines despite receiving a portion of the test samples last minute."

— Testing Services

"It was amazing to get to work with a responsive and intelligent vendor that can understand the specifications that we needed for this project. We took on a very technically difficult project without much room for error, and BDC put in all the extra effort necessary to delivery on our end project. Despite our tight timeline, BDC maintained a high standard of quality despite heavy pressures to release something quickly, and ultimately we got a better end result because of that attitude."

— Test Equipment

"InnerPulse is a small company engaged in the development of a cardiac rhythm management device implanted in the thoracic cavity. The novel design and implant location of the device meant that standard reliability testing equipment was not applicable. Custom equipment designed from scratch would be required. Working with BDC, we were able to quickly build a test fixture that simulates the thoracic cavity. Our collaboration with BDC was productive from the start. BDC was clearly well versed in the mechanical and electrical design of custom testing equipment, the construction of mock vessels, and the human anatomy relevant to our project."

— Simulation Solutions

Petitioner's Exhibit 1028
VIVITRO v. BDC
IPR2024-00320

BDC LABORATORIES

MISSION

The mission of BDC Laboratories is to offer products and services to the medical device industry that aid in functional evaluation of technologies as related to clinical outcomes.

HISTORY

Biomedical Device Consultants was founded in 1977 by Steven Weinberg, Ph.D. as a consulting company to provide general R&D support services to the medical device community. In 1985, a GLP engineering testing laboratory was established to meet the growing needs of domestic and international clients. Craig Weinberg, Ph.D. joined the company in 2006 and under his leadership, BDC Laboratories embarked on a new chapter with expansion into numerous new services and products tailored to the evaluation of cardiac, endovascular, and vascular medical device technologies. As an industry leader today, BDC Laboratories provides support through our services and products for all aspects of development and evaluation in R&D activities, as well as regulatory submissions. With the support of BDC's services and products, our numerous clients have successfully navigated their device development and regulatory approvals from Early Feasibility Studies (EFS) to Investigational Device Exemption (IDE) to Premarket Approval (PMA).

CUSTOMER SERVICE

Since inception, BDC Laboratories has held customer service in the highest regard. The BDC team routinely seeks opportunities to exceed our customer's expectations through various avenues such as: being attentive to our customer's needs; proactively engaging to ensure a complete understanding of a project's equirements; actively communicating throughout a project to ensure alignment; offering solutions to encountered technical challenges; and ensuring technical accuracy with every project and product delivered.

CAPABILITIES

BDC Laboratories' portfolio is comprised of testing services, testing equipment, silicone mock vessels & anatomical models and simulated use solutions, facilitating a comprehensive experience for our clients.

To learn more about BDC, visit **BDCLabs.com** or call **303.456.4665**

Petitioner's Exhibit 1028
VIVITRO v. BDC
IPR2024-00320

VDT-3600i Heart Valve Accelerated Durability

BDC Laboratories' VDT-3600i heart valve durability tester is a patented, accelerated wear test system for evaluating transcatheter & surgical aortic, mitral, pulmonary and tricuspid valves to ISO 5840 requirements. The system has 6 completely independent stations, incorporating 6 drivers that allow each station to be controlled independently. The VDT-3600i system moves fluid through the test valve, producing kinematics representative of clinical response at frequencies up to 50 Hz.

The VDT-3600i system is controlled and monitored by our Statys® VDT software. Among the unique features integrated into the software: complete excitation waveform control; differential pressure loading analyzer; active, closed-loop control on valve loading; real-time monitoring of differential pressure for all stations; and individual station alarms for continual monitoring.

BENEFITS & FEATURES

- Six independent test stations with six independent drivers:
  - Test different size heart valves simultaneously
  - Test different heart valve configurations simultaneously
  - Independently control each station's excitation waveform, frequency and stroke conditions
- Differential pressure loading analyzer for each station to determine adherence to ISO 5840 requirements, with loading criteria cycle counter
- Closed-loop, autopilot control to desired differential pressure loading on each station
- Simultaneous continual monitoring and logging of the real-time differential pressures of all test stations
- Real-time alarms and safeguards to protect both the test samples and test system

KEY SPECIFICATIONS

Sample Capacity	1 to 6
Sample Size	Up to 95 mm
Drive Waveforms	Sine, Modified Sine, & arbitrary (optional)
Frequency*	5 Hz (300 cpm) to 50 Hz (3000 cpm)
Max Differential Pressure	500 mmHg
Fluid Temperature	Room to 50° C

**Actual frequency dependent upon specific test article.*

Petitioner's Exhibit 1028
VIVITRO v. BDC
IPR2024-00320

RWT-4600i Heart Valve Real-Time Durability

BDC Laboratories' RWT-4600i heart valve real-time wear tester possesses the highly unique ability to operate both as a real-time wear and accelerated wear test system, adhering to ISO 5840 requirements in both applications. The RWT-4600i accommodates transcatheter and surgical, aortic, mitral, pulmonary and tricuspid valves. The system has 6 completely independent stations, incorporating 6 drivers that allow each station to be controlled independently.

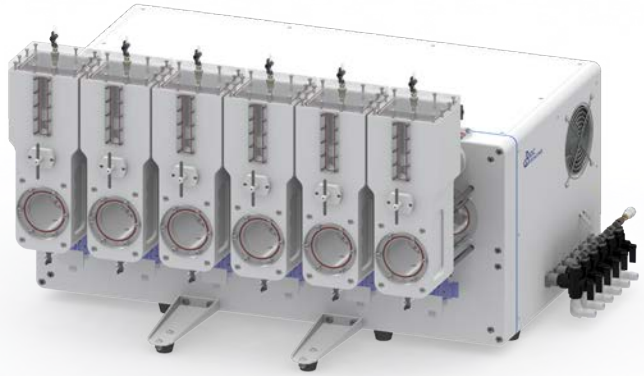

The RWT-4600i system is controlled and monitored by our Statys® RWT software. Among the unique features integrated into software: complete excitation waveform control; differential pressure loading analyzer; active, closed-loop control on valve loading; real-time monitoring of differential pressure for all stations; and individual station alarms for continual monitoring.

BENEFITS & FEATURES

- Ability to operate at both real-time (<200 bpm) and accelerated frequencies (5 to 50 Hz)
- Six independent test stations with six independent drivers:
  - Test different size heart valves simultaneously
  - Test different heart valve configurations simultaneously
  - Control of each station's excitation waveform, frequency and stroke independently
- Differential pressure loading analyzer for each station to determine adherence to ISO 5840 requirements, with loading criteria cycle counter
- Closed-loop, autopilot control to desired differential pressure loading on each station
- Simultaneous continual monitoring and logging of the real-time differential pressures of all test stations
- Real-time alarms and safeguards to protect both the test samples and test system

KEY SPECIFICATIONS

Sample Capacity	1 to 6
Sample Size	Up to 95 mm
Drive Waveforms	Sine, Modified Sine, & Arbitrary (optional)
Frequency*	2 Hz (120 cpm) to 50 Hz (3000 cpm)
Max Differential Pressure	500 mmHg
Fluid Temperature	Room to 50° C

**Actual frequency dependent upon specific test article.*

Petitioner's Exhibit 1028
VIVITRO v. BDC
IPR2024-00320

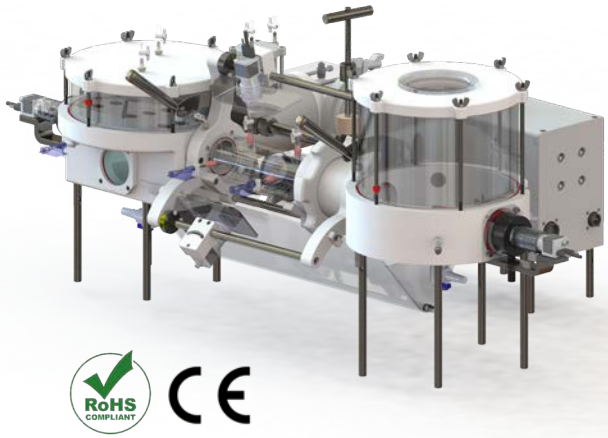

HDTi-6000 Heart Valve Pulse Duplicator

BDC Laboratories' HDTi-6000 heart valve pulse duplicator complies with ISO 5840 requirements, while possessing the innovative ability of integrating high-speed video. The HDTi-6000 accommodates both surgical and transcatheter heart valves, configurable to either left-heart or right-heart for evaluation of all valve positions (i.e. aortic, mitral, pulmonary, tricuspid).

The accompanying Statys® HDTi software offers absolute control over the pulse duplicator, while seamlessly integrating high-speed cameras for both live and post-test video review. Included is the highly desirable ability to playback the video, synchronized to the pressure and flow waveforms, to comprehensively assess the heart valve's response at any point in the cardiac cycle. The embedded Statys® HDTi analysis tools provide a simple and effective means to determine all ISO 5840 noted parameters.

BENEFITS & FEATURES

- Integrated High Speed Video (up to 5 cameras):
  - Integrated high-speed cameras eliminates the need for secondary video systems
  - Video playback with synchronized pressure and flow waveforms provide the ultimate platform for investigation and analysis
- Linear Clamp Operation:
  - Exchanging the heart valve test article occurs without draining the system
  - Facilitates quick and simple exchange of the heart valve test article, increasing productivity
- Integrated data collection and analysis tools to determine all ISO 5840 and FDA required test parameters
- Sinusoidal or arbitrary waveform excitation permits accurate simulation of clinical performance
- System PD-1100 pulsatile pump facilitates precise control with high repeatability and reproducibility

KEY SPECIFICATIONS

Valve Type	Aortic, mitral, pulmonary, tricuspid
Valve Size	Up to 95 mm
Frequency	2 to 240 bpm
Flow Rate	1 to 35 L/min
Flow Monitoring	Ultrasonic Technology
Fluid Temperature	Room to 50° C

Petitioner's Exhibit 1028
VIVITRO v. BDC
IPR2024-00320

SFT-1000 Heart Valve Steady Flow

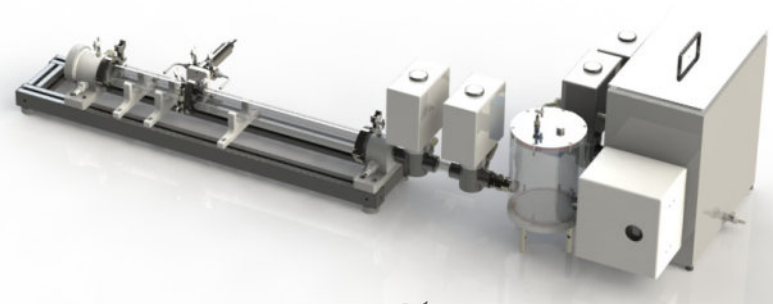

BDC Laboratories' patented SFT-1000 heart valve steady flow hydrodynamic test system achieves all ISO 5840 conditions for both forward flow pressure drop and back low leakage assessments without the need to remove the valve under test, or change its orientation. This unique ability presents an extremely streamlined and efficient test environment for maximum productivity. The SFT-1000 is available either in a manual configuration or as a fully automated test apparatus.

The Statys® SFT software provides a comprehensive interface to program the specific test conditions, as well as present all data real-time throughout the entire test cycle. With high fidelity closed-loop pump control, the SFT-1000 test system will automatically execute each condition precisely, while cycling through all programmed flow rates and/or back flow pressures until the evaluation is complete.

BENEFITS & FEATURES

- Evaluate both forward flow pressure drop and back flow leakage without removing or changing the heart
- Test fluid is maintained within the system and circulated to maintain temperature between tests
- Individual user input test parameters for both forward flow pressure drop and back flow leakage
- Automated execution of all input test parameters with closed-loop control
- Real-time presentation of test results (pressure drop, EOA, back flow leakage rate) for each test condition
- Auto-generated reports with all relevant data for efficient documentation of each test

KEY SPECIFICATIONS

Valve Type	Aortic, mitral, pulmonary, tricuspid
Inflow/Outflow Diameter	35 mm (standard), Custom sizes available
Flow Rate	1 to 35 L/min
Back Pressure	5 to 300 mm Hg
Fluid Temperature	Room to 50° C

Petitioner's Exhibit 1028
VIVITRO v. BDC
IPR2024-00320

PQT-5000 Heart Valve Production

BDC Laboratories' PQT-5000 pulsatile heart valve functional performance test system is designed specifically for the cleanroom production environment. This highly advanced pulse duplicator integrates key attributes such as rapid valve exchange for high throughput, multiple integrated high-speed cameras to visualize leaflet kinematics and quick-release connections for ease of disassembly during sterilization.

The PQT-5000 system is controlled and monitored by the 21 CFR Part 11 compliant Statys® PQT software. Through this state-of-the-art software platform, the heart valve performance is assessed against a battery of user-defined QA performance metrics, providing a clear pass-fail result in a rapid, reliable and consistent manner. The assessment parameters are customizable and can include, among others: forward flow pressure drop, regurgitant fraction, effective orifice area (EOA), geometric orifice area (GOA), central jet area and leaflet pinwheel.

BENEFITS & FEATURES

- Highly versatile for customization and evaluation of all heart valve technologies
- Integrated High Speed Video (Up to 5 cameras):
  - Integrated high-speed cameras eliminates the need for secondary video systems
  - Provides comprehensive analysis of valve kinematics
- Linear Clamp Operation:
  - Exchanging the heart valve test article occurs without draining the system
  - Facilitates quick and simple exchange of the heart valve test article
- Test system is fully compatible with chemical sterilization
- Three levels of system login & operation: Operator, Engineer and Administrator
- Integrated test article pass/fail/undetermined selectable indicators
- 21 CFR Part 11 compliant with automatically generated test reports

KEY SPECIFICATIONS

Valve Type	Aortic, mitral, pulmonary, tricuspid
Sample Size	Up to 80 mm
Frequency	30 to 190 bpm
Flow Rate	1 to 10 L/min
Fluid Temperature	Up to 50° C

Petitioner's Exhibit 1028
VIVITRO v. BDC
IPR2024-00320

RDTL-0200 Stent / Stent Graft Radial Durability

BDC Laboratories' RDTL-0200 radial durability test system incorporates our patented Dual-Drive Emulator™ technology which produces concurrent pressurization of the mock vessel from both ends with every cycle. Designed for adaptability, the RDTL-0200 system utilizes exchangeable manifolds to facilitate evaluation of smaller technologies (e.g. coronary stents) and large technologies (e.g. thoracic endografts) on the same system to ASTM F2477 requirements.

The accompanying test system software, Statys® RDT, provides a single operator-focused, control and monitoring test interface. Integrated features such as real-time outer diameter to inner-diameter conversion, closed-loop driver control to key test parameters and continual monitored system alarms ensure each test is executed in an efficient and controlled manner.

BENEFITS & FEATURES

- Exchangeable System Manifolds:
  - One RDTL-0200 system can be utilized for many sample diameters, lengths and configurations by simply changing test system manifolds
- Dual-Drive Emulator™ technology pressurizes both vessels ends concurrently with a single test system driver
- Integrated, real-time outer diameter to inner diameter calculations based on both ASTM and ISO relationships
- Autopilot, closed-loop control to maintain consistent test sample diametric strain
- Real-time alarms and safeguards to protect both the tests samples and system

KEY SPECIFICATIONS

Sample Diameter	2.5 to 50 mm
Test Frequency*	1 to 80 Hz
Sample Configuration	Straight, Bifurcated 'U', Angled, 90° Bend, Aneurismal
Diameter Measurement	Optical micrometer of high-speed imaging
Fluid Temperature	Up to 50° C

**Actual frequency dependent upon specific test article.*

Petitioner's Exhibit 1028
VIVITRO v. BDC
IPR2024-00320

PD-1100 Pulsatile Pump

BDC Laboratories' PD-1100 pulsatile pump system provides a highly versatile, reliable and repeatable pulsatile source for accurately simulating physiological hemodynamics in vitro, in both industry and academic environments. The numerous applications of the PD-1100 include: ex-vivo beating heart models, simulated use platforms, pulse duplicators, particle image velocimetry (PIV) systems, bioreactors and physician training platforms.

The PD-1100 accompanying software, Statys® PD, provides an exceptionally effective, operator-based control and monitoring environment that enables full engagement with all the pump system's capabilities. Integrated in the software is comprehensive driving waveform definition, which is interfaced either through an adjustable built-in controller, or an integrated custom waveform creator tool. Too numerous to list, the extensive hardware and software accessories facilitate tailoring each PD-1100 pump system for its application, yielding unmatched performance in all pulsatile flow applications.

BENEFITS & FEATURES

- Extensive accessories tailor the PD-1100 system to any technology and test platform for structural heart, cardiovascular, endovascular and vascular applications
- Fully digital software-based interface for precise and accurate pump control
- Sinusoidal or arbitrary waveform driver excitation to accurately simulate clinical hemodynamics
- Closed-loop pump control provides superior beat-to-beat repeatability and reproducibility
- Integrated data collection for real-time viewing of test parameters in multiple graphical and tabular layouts
- All measurement signals acquired in high-fidelity for detailed review and analysis
- Operator-focused software environment facilitates ease of system operation

KEY SPECIFICATIONS

Frequency	2 to 240 bpm
Test Fluid	Water, Phosphate Buffered Saline, Saline, Blood Analog
Stroke volume	0 to 50 ml (small piston) 0 to 290 ml (regular piston) 0 to 450 ml (large piston)
Flow Rate	0 to 2 L/min (small piston) 0 to 10 L/min (regular piston) 0 to 25 L/min (large piston)
Driving **Waveform**	Sinusoidal, Arbitrary
Synchronization	TTL and analog

Petitioner's Exhibit 1028
VIVITRO v. BDC
IPR2024-00320

PD-0750 Portable Pulse Duplicator

BDC Laboratories' PD-0750 portable pulse duplicators provide a compact pulsatile flow source for heart valve applications, with integrated heating and system compliance (mitral & tricuspid models). This portable system presents a partial beating heart that operates in concert with your specific heart valve prosthesis, with PD-0750 models available for aortic, mitral, tricuspid and pulmonary valve applications.

The PD-0750 portable pulse duplicator can be conveniently integrated with BDC Laboratories' simulation solutions or other simulated use test systems requiring pulsatile flow for an extensive array of applications including: device and delivery system testing, marketing and sales demonstrations and physician training.

BENEFITS & FEATURES

- Setup and ready for operation in minutes, with minimal training required, the PD-0750 is very well suited for marketing & sales applications, as well as physician training
- With integrated heating and systemic compliance on some models, the only additional hardware required is the specific test apparatus and collateral valve under test
- Compact and at a modest weight, the system is well suited for applications that require mobility
- Transportation can be accomplished either as checked as luggage for airline travel or shipped in a custom hard-shell case

KEY SPECIFICATIONS

Frequency	60 to 90 bpm
Test Fluid	Water, Phosphate Buffered Saline, Saline, Blood Analog
Flow Rate	1.5 to 5 L/min
Max Pressure	200 mm Hg
Driving Waveform	200 mm Hg
Temperature	Room to 40° C

Petitioner's Exhibit 1028
VIVITRO v. BDC
IPR2024-00320

PD-0500 Portable Pulse Duplicator

BDC Laboratories' PD-0500 portable pulse duplicator provides a compact, left-heart or right-heart pulsatile flow source with integrated heating and system compliance. The PD-0500 is very easy to setup and operate, and designed to drive cardiovascular, endovascular and vascular techology's pulsatile flow systems.

The PD-0500 portable pulse duplicator can be conveniently integrated with BDC Laboratories' simulation solutions or other simulated use test systems requiring pulsatile flow for an extensive array of applications including: device and delivery system testing, marketing and sales demonstrations and physician training.

BENEFITS & FEATURES

- Setup and ready for operation in minutes, with minimal training required, the PD-0500 is very well suited for marketing & sales applications, as well as physician training
- With integrated heating and systemic compliance, the only additional hardware required is the specific vasculature
- Compact and at a modest weight, the system is well suited for applications that require mobility
- Transportation can be accomplished either as checked luggage for airline travel or shipped in a custom hard-shell case

KEY SPECIFICATIONS

Frequency	60 to 90 bpm
Test Fluid	Water, Phosphate Buffered Saline, Saline, Blood Analog
Flow Rate	1.5 to 5 L/min
Max Pressure	200 mm Hg
Temperature	Room to 40° C

Petitioner's Exhibit 1028
VIVITRO v. BDC
IPR2024-00320

PD-0250 Portable Oscillating Pump

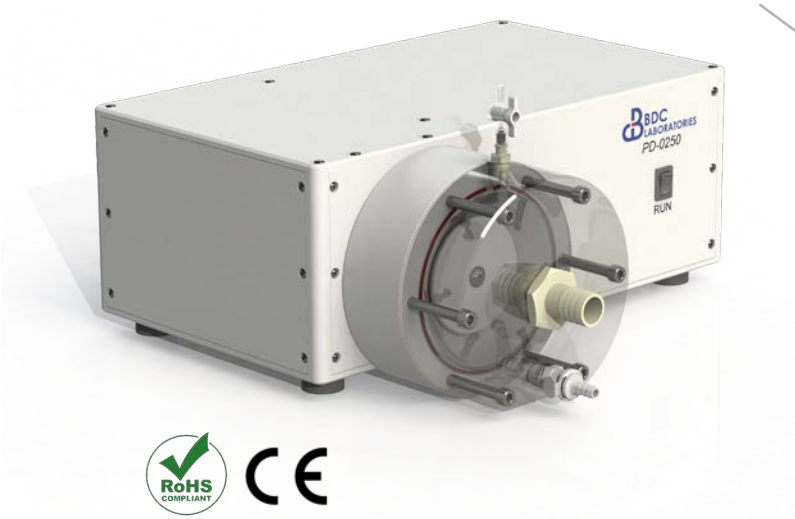

BDC Laboratories' PD-0250 portable oscillating pump provides a compact, purely oscillating flow source for applications requiring a dynamic flow environment. When coupled with valved technologies, the PD-0250 is a reliable driver that facilitates highly repeatable opening and closing dynamics of test articles.

The PD-0250 utilizes a diaphragm-based drive mechanism that results in very low maintenance and highly reliability. Applications for this fluid oscillating pump include: physician training systems, production qualification systems and sales demonstration models.

BENEFITS & FEATURES

- The PD-0250 is read for operation in minutes, with minimal training required
- Driven with diaphragm technology, the system operates with low maintenance and high reliability
- Compact and light weight, the system is well suited for applications that require mobility
- Transportation can be accomplished either as checked luggage for airline travel or shipped in a custom hard-shell case

KEY SPECIFICATIONS

Frequency	60 to 90 bpm
Test Fluid	Water, Phosphate Buffered Saline, Saline, Blood Analog
Stroke Volume	30 to 59 ml
Max Pressure	300 mm Hg

Petitioner's Exhibit 1028
VIVITRO v. BDC
IPR2024-00320

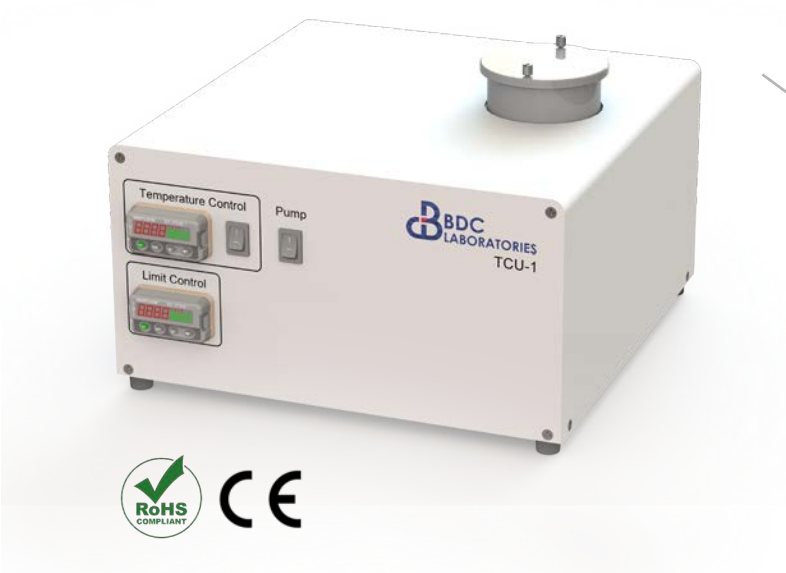

TCU-1 Heated Circulator Bath

BDC Laboratories' TCU-1 is a heated circulator bath that creates stable thermal control for any fluid test environment. This saline compatible system has the unique ability to monitor and control to either the fluid temperature within the bath or a remotely measured temperature in the associated test chamber.

Design for continual operation with an integrated pump, the TCU-1 heating circulator can be utilized for numerous applications that require reliable and tight thermal stability. Common applications for this system include: fluid baths for fatigue test systems, heat exchangers for bioreactors and controlling fluid temperature in simulated use systems and universal tester fluid baths.

BENEFITS & FEATURES

- Compatible with saline solutions to facilitate a wide range of heating applications
- Fluid temperature controlled to either the bath temperature or a remote thermometer located in the test chamber
- As a completely closed system, the TCU-1 can be placed below, at or above the height of the test region without the risk of overflow
- An integrated pump provides for reliable circulation from the heated reservoir to the test chamber without interruption during continual operation over months at a time
- Multiple safety features prevent the bath from exceeding the desired operating temperature

KEY SPECIFICATIONS

Temperature Range	Room to 50° C
Reservoir Volume	1.7 L (0.45 Gal)
Test Fluid	Water, Phosphate Buffered Saline, Saline, Blood Analog
Max Flow Rate	200 mm Hg

Petitioner's Exhibit 1028
VIVITRO v. BDC
IPR2024-00320

BDC LABORATORIES

CAPABILITIES

TESTING SERVICES

Comprehensive ISO/IEC 17025:2017 Accredited testing services for regulatory submissions or R&D on a vast array of medical device technologies

TESTING EQUIPMENT

Cardiovascular, structural heart and endovascular test systems with superior control and adaptability for durability, fatigue and bench testing applications

SILICONE VESSELS

Certified silicone mock vessels for durability testing and silicone models for simulation and R&D activities in all geometries, as well as patient-based datasets

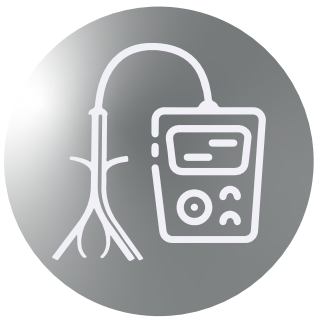

SIMULATION SOLUTIONS

Standard or custom turnkey simulation systems that include clinically relevant vascular pathways and hemodynamics for device development and physician training

To learn more about BDC's full range of capabilities and equipment, visit **BDCLabs.com** or call **303.456.4665**

Petitioner's Exhibit 1028
VIVITRO v. BDC
IPR2024-00320

Questions?

To learn more about BDC, visit **BDCLabs.com** or call **303.456.4665**

www.bdclabs.com

info@bdclabs.com

303.456.4665

4060 Youngfield St.
Wheat Ridge, CO 80033

© 2021 BDC Laboratories

BDC LABORATORIES

Petitioner's Exhibit 1028
VIVITRO v. BDC
IPR2024-00320