UNITED STATES PATENT AND TRADEMARK OFFICE

BEFORE THE PATENT TRIAL AND APPEAL BOARD

GOOGLE LLC,
Petitioner,

v.

TOUCHSTREAM TECHNOLOGIES, INC.,
Patent Owner.

IPR2022-00795
Patent 8,356,251 B2

Before DEBRA K. STEPHENS, DANIEL J. GALLIGAN, and AMBER L. HAGY, *Administrative Patent Judges.*

STEPHENS, *Administrative Patent Judge*.

JUDGMENT
Final Written Decision
Determining No Challenged Claims Unpatentable
35 U.S.C. § 318(a)

Comcast, Ex. 1064

I. INTRODUCTION

A. Background and Summary

In this *inter partes* review, Google LLC ("Petitioner") challenges claims 1, 2, and 5–9 of U.S. Patent 8,356,251 B2 (Ex. 1001 ("'251 Patent")), assigned to Touchstream Technologies, Inc. ("Patent Owner").

We have jurisdiction under 35 U.S.C. § 6. This Final Written Decision, issued pursuant to 35 U.S.C. § 318(a), addresses issues and arguments raised during the trial in this *inter partes* review. For the reasons discussed below, we determine that Petitioner has failed to prove by a preponderance of the evidence that claims 1, 2, and 5–9 of the '251 Patent are unpatentable (*see* 35 U.S.C. § 316(e) (2018) ("In an inter partes review instituted under this chapter, the petitioner shall have the burden of proving a proposition of unpatentability by a preponderance of the evidence.")).

B. Procedural History

Petitioner filed a petition for *inter partes* review (Paper 1 ("Pet." or "Petition")) challenging claims 1–5, 8, 11, 12, 14, 15, 27, and 28 of the '251 Patent.

Petitioner relies upon the following prior art references:

Reference	Exhibit No.
Muthukumarasamy et al., US 2010/0241699 A1, published Sept. 23, 2010 ("Muthukumarasamy")	1008
Hayward, US 8,918,812 B2, issued Dec. 23, 2014 ("Hayward")	1009

(Pet. 2). Petitioner challenges the claims on the following grounds:

Claim(s) Challenged	35 U.S.C. §	Reference(s)/Basis
1, 2, 5–9	103	Muthukumarasamy
1, 2, 5–9	103	Muthukumarasamy, Hayward

(Pet. 2–3). Patent Owner timely filed a Preliminary Response (Paper 6 ("Prelim. Resp.")). With our authorization, Petitioner filed a Reply to Patent Owner's Preliminary Response (Paper 7 ("Pet. Reply to POPR")), and Patent Owner filed a Sur-reply to Petitioner's Preliminary Reply (Paper 9 ("PO Sur-reply to Pet. Reply")). We instituted trial on the asserted grounds of unpatentability (Paper 10 ("Inst. Dec." or "Institution Decision")).

After institution, Patent Owner filed a Request for Rehearing and review by the Precedential Opinion Panel (Paper 12). The Precedential Opinion Panel denied review (Paper 19, 2). We denied rehearing (Paper 20, 3).

During the trial, Patent Owner filed a Response (Paper 18 ("PO Resp.")), Petitioner filed a Reply (Paper 22 ("Pet. Reply" or "Petitioner Reply")), and Patent Owner filed a Sur-reply (Paper 25 ("PO Sur-reply" or "Patent Owner Sur-reply"). An oral hearing was held on June 13, 2023, a transcript of which appears in the record (Paper 34 ("Tr.")).

Petitioner relies on testimony from Dr. Benjamin B. Bederson (Ex. 1005). Patent Owner relies on testimony from Dr. Kevin C. Almeroth (Ex. 2022). Patent Owner entered into the record a transcript of the deposition of Dr. Bederson (Ex. 2021). No deposition of Dr. Almeroth was entered into the record (*see* Tr. 103:22–24 (Patent Owner's counsel noting that "Petitioner did not cross-examine Dr. Almeroth")).

C. Real Parties in Interest

Patent Owner identifies itself as the real-party-in-interest (Paper 5, 1).

Petitioner identifies itself as the real-party-in-interest (Pet. 79).[1]

D. Related Matters

Petitioner and Patent Owner indicate the '251 Patent was asserted in the following district court proceeding: *Touchstream Techs, Inc. v. Google, LLC*, No. 6-21-cv-00569 (W.D. Tex.) (Pet. 79; Paper 5, 1). Petitioner further indicates that the '251 Patent was asserted in the following district court proceeding: *Touchstream Techs., Inc v. Vizbee, Inc.*, No. 1-17-cv-06247 (S.D.N.Y.) (Pet. 79; Paper 30, 1). Patent Owner additionally identifies the following cases:

> *Touchstream Technologies, Inc. v. Altice USA, Inc.*, No. 2:23-cv-00060-JRG (E.D. Tex., Marshall Division);
>
> *Touchstream Technologies, Inc. v. Comcast Cable Commc'ns, LLC*, No. 2:23-cv-00062 (E.D. Tex., Marshall Division); and
>
> *Touchstream Technologies, Inc. v. Charter Commc'ns, Inc.*, No. 2:23-cv-00059 (E.D. Tex., Marshall Division)

(Paper 30,1).

We are concurrently issuing final written decisions in IPR2022-00793, involving related U.S. Patent 8,782,528 B2, and IPR2022-00794, involving related U.S. Patent 8,904,289 B2.

---

[1] Petitioner states that Google LLC is a subsidiary of XXVI Holdings Inc., which is a subsidiary of Alphabet Inc., and that XXVI Holdings Inc. and Alphabet Inc. are not real parties-in-interest to this proceeding (Pet. 79 n.4).

E. The '251 Patent (Ex. 1001)

The '251 Patent, titled "Play Control of Content on a Display Device," issued January 15, 2013 (Ex. 1001, codes (45), (54)). The '251 Patent describes a system that "allow[s] a personal computing device," e.g., a mobile phone, "to be used to select different content to be played on a remote display," e.g., a television set, and "allow[s] the user to control how the content is displayed on the display device using the personal computing device" (Ex. 1001, 2:11–15, 2:27–33). Figure 1, reproduced below, is a block diagram illustrating an exemplary system (Ex. 1001, 2:41–42).

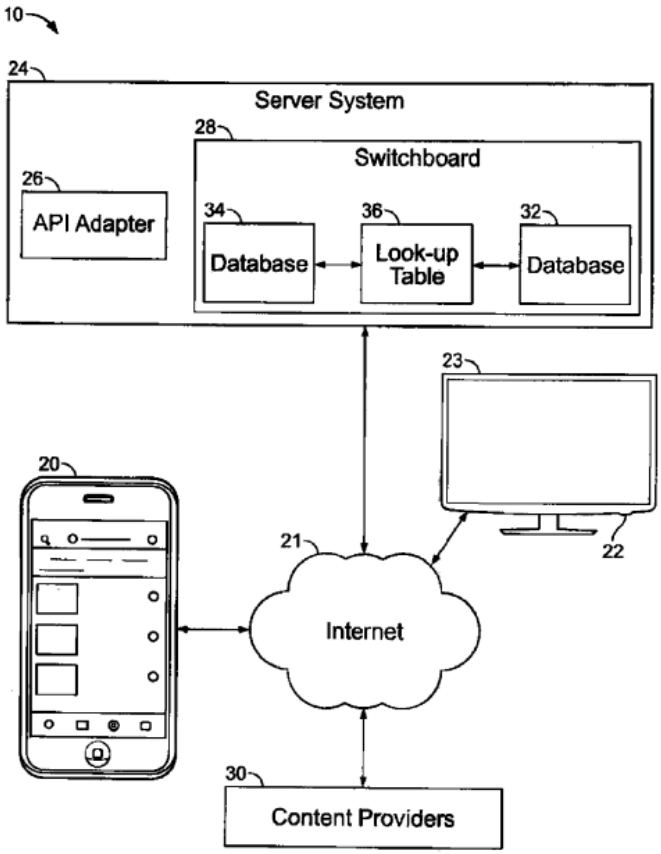

FIG. 1

As shown in the block diagram of Figure 1, "a first device (e.g., a personal computing device) 20" connects to and "acts as a controller" for "a second device (e.g., a television set 22 with a display 23) [and the second device]

acts as a receiver to play content selected by a user of the first device and [the second device] to respond to commands that originate at the personal computing device" (Ex. 1001, 3:1–7). For example, television set 22 can be commanded "to access a content provider 30 through the Internet 21, load a specific media player, load the media player-specific content (e.g., a video) and play the content on the television display 23" (Ex. 1001, 3:18–23).

Furthermore, personal computing device 20 controls the selection of and playback of content on television set 22 through server system 24, rather than through directly controlling television set 22 (Ex. 1001, 3:10–18). In particular,

> [w]hen a user makes a selection using the personal computing device 20 for particular content to be displayed on the television display 23, a signal is sent through the Internet (or other network) 21 to the server system 24. A corresponding command signal then is passed along [from server system 24] to the connected television set 22 which acts on a transmission code contained within the signal and performs specified commands

(Ex. 1001; *see* Ex. 1001, 3:36–41 ("user-initiated play commands," e.g., play pause, stop, rewind, fast forward, "are passed from the user's personal computing device 20 through the server system 24, to the television set 22")). More specifically, personal computing device 20 sends a signal for controlling media playback to server system 24; server system 24, in turn, sends a signal to television set 22, which correspondingly displays the controlled media (Ex. 1001, 3:18–36).

The signal from personal computing device 20 (which selects content or controls playback) is formatted and transmitted by personal computing device 20 in a message sent to server system 24 (Ex. 1001, 4:27–29). That

> The message from the mobile phone 20 contains a transmission code that includes data regarding . . . the secondary display it

> wants to connect to (e.g., television set 22 with display 23), the location and name of the media player for the selected video the command (e.g., play, pause, rewind, etc.), and the video file to be acted upon

(Ex. 1001, 4:29–35, Fig. 3). That message "is transmitted over the Internet 21 and is received by the server system 24" (Ex. 1001, 4:40–42). Server system 24 then "converts the incoming commands from the mobile device 20 into the correct JavaScript (or other programming) code used by the [television set] 22 to control the specific player (block 120)" (Ex. 1001, 5:67–6:3). That is, the server "interpret[s] and convert[s] a standard or universal command (e.g., play, pause, etc.) into the specific command recognized by the media player" playing content on the television set 22 (Ex. 1001, 5:58–62). Then, server system 24 "copies the converted version of the message to the database 34 associated with the [television set] 22" (Ex. 1001, 6:3–6). Television set 22 then receives the server's converter message (Ex. 1001, 6:23–29) and then "executes the message" (Ex. 1001, 6:30–33), e.g., "load[s] and unload[s] different video players" (Ex. 1001, 6:34–48).

1. Illustrative Claim

Challenged claim 1, the sole challenged independent claim, is reproduced below.

> 1. A machine-implemented method of controlling presentation of video content on a display device that loads any one of a plurality of different media players, the method comprising:
>
> > assigning, by a server system, a synchronization code to the display device;
> >
> > receiving, in the server system, a message from a personal computing device that is separate from the server system and separate from the display device, wherein the message includes the synchronization code;

> storing, by the server system, a record establishing an association between the personal computing device and the display device based on the synchronization code;
>
> receiving, in the server system, one or more signals from the personal computing device, the one or more signals specifying a video file to be acted upon and identifying a particular media player for playing the video content, the one or more signals further including a universal playback control command for controlling playing of the video content on the display device by the particular media player,
>
> converting, by the server system, the universal playback control command into corresponding programming code to control playing of the video content on the display device by the particular media player, wherein converting the universal playback control command includes selecting from among a plurality of specific commands, each of which represents a corresponding playback control command for a respective media player; and
>
> storing, in a database associated with the server system, information for transmission to or retrieval by the display device, wherein the information specifies the video file to be acted upon, identifies the particular media player for playing the video content, and includes the corresponding programming code to control playing of the video content on the display device by the particular media player in accordance with the universal playback control command

(Ex. 1001, 11:22–60 (as corrected by the Certificate of Correction)).

II. ANALYSIS

A. Principles of Law

A patent claim is unpatentable under 35 U.S.C. § 103(a) if the differences between the claimed subject matter and the prior art are such that the subject matter, as a whole, would have been obvious at the time the invention was made to a person having ordinary skill in the art to which said

subject matter pertains (*KSR Int'l Co. v. Teleflex Inc.*, 550 U.S. 398, 406 (2007)). The question of obviousness is resolved on the basis of underlying factual determinations including (1) the scope and content of the prior art; (2) any differences between the claimed subject matter and the prior art; (3) the level of ordinary skill in the art; and (4) any secondary considerations, if in evidence[2] (*Graham v. John Deere Co. of Kan. City*, 383 U.S. 1, 17–18 (1966)).

B. Level of Ordinary Skill in the Art

The level of skill in the art is a factual determination that provides a primary guarantee of objectivity in an obviousness analysis (*Al-Site Corp. v. VSI Int'l Inc.*, 174 F.3d 1308, 1324 (Fed. Cir. 1999) (citing *Graham v. John Deere Co.*, 383 U.S. 1, 17–18 (1966); *Ryko Mfg. Co. v. Nu-Star, Inc.*, 950 F.2d 714, 718 (Fed. Cir. 1991)).

Petitioner asserts a "person of skill in the art ('POSA') would have had at least a bachelor's degree in electrical engineering or computer science (or equivalent experience) and two years of experience designing or implementing interactive systems with networked media or media playback systems" (Pet. 13 (citing Ex. 1005 ¶ 47)). Petitioner further asserts "[w]ith more education, for example, postgraduate degrees and/or study, less experience is needed to attain an ordinary level of skill in the art. Similarly, more experience can substitute for formal education" (Pet. 13 (citing Ex. 1005 ¶¶ 45–49)).

---

[2] The parties do not present arguments related to objective evidence of nonobviousness (i.e., secondary considerations) as to any of the challenged claims.

At institution, we found this definition to be consistent with the scope and content of the '251 Patent and the asserted prior art, with a modification of omitting "at least" to avoid vagueness as to the amount of educational experience—"a bachelor's degree in electrical engineering or computer science (or equivalent experience) and two years of experience designing or implementing interactive systems with networked media or media playback systems" (Inst. Dec. 10).

In its Response, Patent Owner contends an ordinarily skilled artisan would have had

> (1) the equivalent of a four-year, B.S. [(Bachelor of Science)] degree from an accredited institution in computer science, computer engineering or an equivalent field; (2) approximately two years of professional experience with Internet-based video delivery systems; and (3) working proficiency with network architecture, including Internet-hosted server-client systems, and with computer programming

(PO Resp. 12–13 (citing Ex. 2022 ¶¶ 43, 45–80)). Patent Owner further contends, "[a]dditional graduate education could substitute for professional experience, while significant experience in the field might substitute for formal education," which "is consistent with the level adopted by Petitioner" (PO Resp. 13 (citing Ex. 2023; Pet. 13)).

Petitioner does not address Patent Owner's definition in its Petitioner Reply (*see* Paper 22). Given the differences in the assertions, in the Oral Hearing, we asked Patent Owner about its concerns with the definition set forth in the Decision to Institute:

> In our Decision to Institute we had set forth a level of skill per person of ordinary skill.

> In your response, you came back with something different. And I'm wondering, what, specifically, you have concern about with the definition set forth in the Decision to Institute?

(Tr. 78:6–10). Patent Owner responded: "I don't think it makes any difference for this panel's determination" (Tr. 78:13–14). We agree and determine that the differences in the level of skill offered by the Parties are not so significant as to warrant any changes to the definition set forth in the Decision to Institute. Therefore, we maintain our determination that an ordinarily skilled artisan would have had "a bachelor's degree in electrical engineering or computer science (or equivalent experience) and two years of experience designing or implementing interactive systems with networked media or media playback systems" (*see* Inst. Dec. 10).

We determine this level of skill comports with the qualifications a person would have needed to understand and implement the teachings of the '251 Patent and the prior art of record (*cf. Okajima v. Bourdeau*, 261 F.3d 1350, 1355 (Fed. Cir. 2001) (noting that the prior art itself may reflect an appropriate level of skill in the art)).

C. Claim Construction

We construe claim terms according to the standard set forth in *Phillips v. AWH Corp.*, 415 F.3d 1303, 1312–17 (Fed. Cir. 2005) (en banc) (37 C.F.R. § 42.100(b) (2021)). Under *Phillips*, claim terms are afforded "their ordinary and customary meaning" (*Phillips*, 415 F.3d at 1312). "[T]he ordinary and customary meaning of a claim term is the meaning that the term would have to a person of ordinary skill in the art in question at the time of the invention" (*Phillips*, 415 F.3d at 1313). "Importantly, the person of ordinary skill in the art is deemed to read the claim term not only in the

context of the particular claim in which the disputed term appears, but in the context of the entire patent, including the specification" (*Phillips*, 415 F.3d at 1313). An inventor may rebut that presumption by providing a definition of the term in the specification "with reasonable clarity, deliberateness, and precision" (*In re Paulsen*, 30 F.3d 1475, 1480 (Fed. Cir. 1994)). In the absence of such a definition, limitations are not to be read from the specification into the claims (*In re Van Geuns*, 988 F.2d 1181, 1184 (Fed. Cir. 1993)).

Petitioner asserts that we "need not construe any claims" to resolve this controversy and that it "adopts" Patent Owner's "proposed plain and ordinary meaning for all terms [from] the parallel district court action" (Pet. 12–13 (citing Ex. 1005 ¶ 50; Ex. 1014)). Patent Owner proposes constructions for the terms "media player" and "programming code" (PO Resp. 13–20). We address the term "media player" below.

1. Media player

Patent Owner contends, based on the "intrinsic record . . . an ordinary artisan would have understood the ordinary and customary meaning of 'media player' in the '251 Patent refers to application software and does not encompass hardware devices" (PO Resp. 13 (citing Ex. 2022 ¶¶ 81–92, 95)).

Petitioner asserts that it "has not alleged any hardware device is a 'media player'" and thus, "the Board need not resolve whether 'hardware devices' are encompassed by 'media player'" (Pet. Reply 1). Rather, Petitioner states the media players relied upon in the Petition are all software (Pet. Reply 1–2). Petitioner specifically states, "Petitioner has identified three 'media players' in the prior art. Two of these—Muthukumarasamy's

'Video Player[s]' and Hayward's 'media players' (Petition, 23–26)—are application software. The third 'media player' is likewise not a hardware device" (Pet. Reply 1–2). Thus, the parties agree that the term "media player" refers to software and not to a hardware device, and we apply this interpretation in our patentability analysis.

2. Additional Terms

In light of the record and our findings, reasonings, and conclusions discussed below, we determine that no other terms or phrases in the claims require express construction (*see Realtime Data, LLC v. Iancu*, 912 F.3d 1368, 1375 (Fed. Cir. 2019) ("The Board is required to construe 'only those terms . . . that are in controversy, and only to the extent necessary to resolve the controversy.'" (quoting *Vivid Techs., Inc. v. Am. Sci. & Eng'g, Inc.*, 200 F.3d 795, 803 (Fed. Cir. 1999)))).

D. Asserted Obviousness over Muthukumarasamy

Petitioner contends claims 1, 2, and 5–9 would have been obvious over Muthukumarasamy (Pet. 14–15, 20–74 (citing Ex. 1005 ¶¶ 65–72, 86–93, 95–99, 104–110, 113–119, 122–125, 130–134, 137–144, 147–150, 153–162; Ex. 1008 ¶¶ 20, 25–27, 31, 36, 38, 44–45, 47–51, 56–58, 64, 68–70, 77, 83–85, 88, 114, 116–117, 134, 149, Figs. 1, 2, 5, 6, 12, 14–15, 18–19)).

1. Muthukumarasamy (Ex. 1008)

Muthukumarasamy is a U.S. patent application publication titled "Device-Based Control System," and published September 23, 2010 (Ex. 1008, codes (43), (54)). Muthukumarasamy describes a "Device-Based

Control System (DBCS) . . . that enables consumers, through the use of an internet-enabled device (IED)," e.g., a smartphone, "to navigate through media or entertainment content, control media components or equipment to watch and/or listen to media content" (Ex. 1008 ¶ 26). Figure 1, reproduced below, is "a block diagram of the Device-Based Control System (DBCS)" (Ex. 1008 ¶ 44).

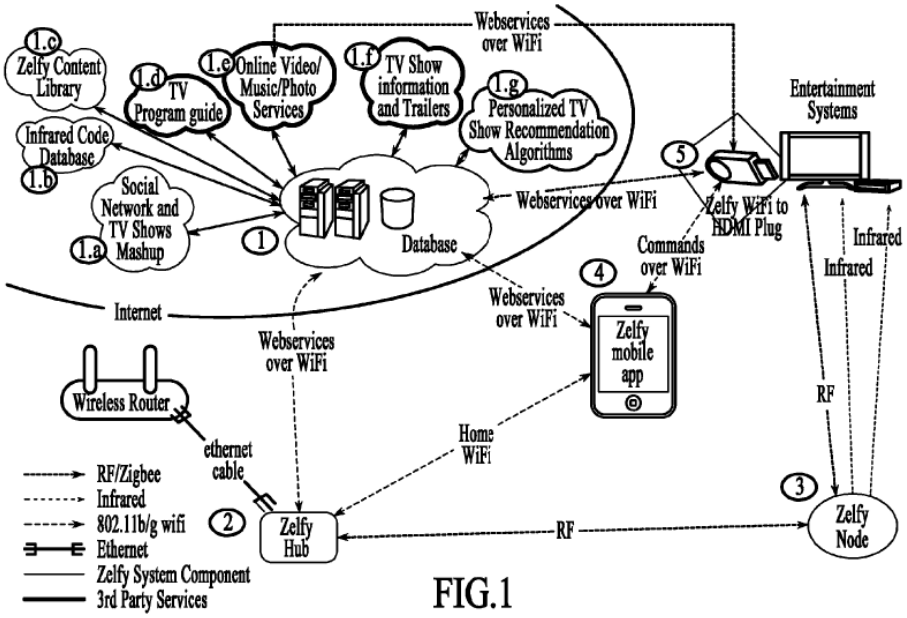

FIG.1

As shown in the block diagram of the DBCS of Figure 1, DBCS includes IED 4, zHub 2, zNode 3, and entertainment systems such as a television set (Ex. 1008 ¶ 44). A user interacts with IED 4 to select or control content playback hosted on internet server 1 (Ex. 1008 ¶¶ 44–45). For example, IED 4 executes a media management application that presents media choices from "plurality of disparate media sources" for the user to select (Ex. 1008 ¶ 48).

"When the IED sends a [content selecting or controlling] command, the zHub receives the command from the IED and resolves the command into a specific instruction directed at a specific zNode in the house" (Ex.

1008 ¶ 57). For example, "when a user selects content that is on channel 324 to be displayed on the living room TV, the zHub translates the command into a specific RF signal directed at the zNode in the living room" (Ex. 1008 ¶ 57). In particular, zHub 2 "receives signals or commands from the IED 4 via a local or premise network (e.g., router, WiFi, etc.) and translates [those] received commands to RF signals;" zNode 3 in turn receives the translated RF signals and translates those RF signals "to a protocol (e.g., Infrared) interpretable by the media components" (Ex. 1008 ¶ 44). For example, "the infrared codes needed to control the media components" are referenced for such translation (Ex. 1008 ¶ 66). Then, those translated signals are received by media components, e.g., a television set, to control the media component, "e.g., volume selection, channel selection, pause/play, etc." (Ex. 1008 ¶ 50).

Additionally, in one DBCS embodiment, a remote-controlled internet browser software (RCIBS or ZRCIBS) provides "a remote controllable internet browser optimized for internet-media consumption" (Ex. 1008

¶ 83). Figure 18, reproduced below, is a "block diagram . . . of a home network" (Ex. 1008 ¶ 83).

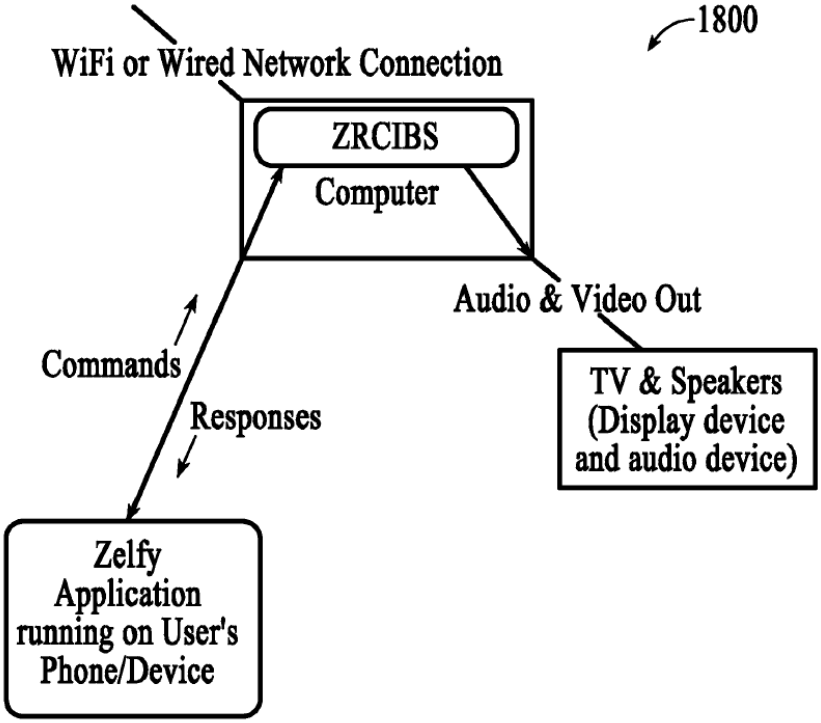

FIG.18

As shown in the block diagram of Figure 18, the home network comprises a computer hosting the RCIBS and the IED (Ex. 1008 ¶ 83, Fig. 18). The RCIBS sends and receives commands and responses, respectively, to a Zelfy application running on a user's phone, and transmits audio and video to a TV and speakers (Ex. 1008 ¶ 83, Fig. 18). In particular, Figure 18 further shows "RCIBS is deployed on a computer that has video, audio and internet capabilities and is connected to the home network of the user" (Ex. 1008 ¶ 83, Fig. 18). Additionally, the "IED transmits commands to the RCIBS and receives responses from the RCIBS: the commands are received and executed by RCIBS" (Ex. 1008 ¶ 83, Fig. 18). For example, RCIBS provides video output to a television (*see* Ex. 1008, Fig. 18). Other

commands from the IED include: "Play video at given URL," causing the RCIBS to "play the video present at [a] given URL" and "Play video with given video-id (as specified by 3rd party using 3rd party APIs and Video Players," causing the RCIBS to "load[] the 3rd Party Video Player specified and plays the video with given video[-]id)" (Ex. 1008, Fig. 19).

2. *Independent Claim 1*

Petitioner contends independent claim 1 would have been obvious over Muthukumarasamy (Pet. 14–15, 20–63). Patent Owner argues that Petitioner's contentions fail for the following limitation of claim 1:

> receiving, in the server system, one or more signals from the personal computing device, the one or more signals specifying a video file to be acted upon and identifying a particular media player for playing the video content

(PO Resp. 1–2). In particular, Patent Owner contends,

> Petitioner relies on Muthukumarasamy's descriptions of two distinct processes, which use different components of Muthukumarasamy's system to present different types of content: the "RCIBS" for internet content and the "zHub and zNode" for non-internet content. Neither of these processes satisfies all the limitations of the challenged claims, and Petitioner fails to offer any rationale for combining features of these two processes . . .

(PO Resp. 1). For the reasons explained below, we agree with Patent Owner.

Petitioner relies on Muthukumarasamy to teach this limitation (Pet. 34–38 (citing Ex. 1005 ¶¶ 92–99; Ex. 1008 ¶¶ 44–45, 47–48, 50, 57, 64, 70, 77, 84–85, 88, 116–117, 134, 149, Figs. 2, 19)). Petitioner offers an

annotated version of Muthukumarasamy's Figure 1, reproduced below, to show the alleged components of claim 1:

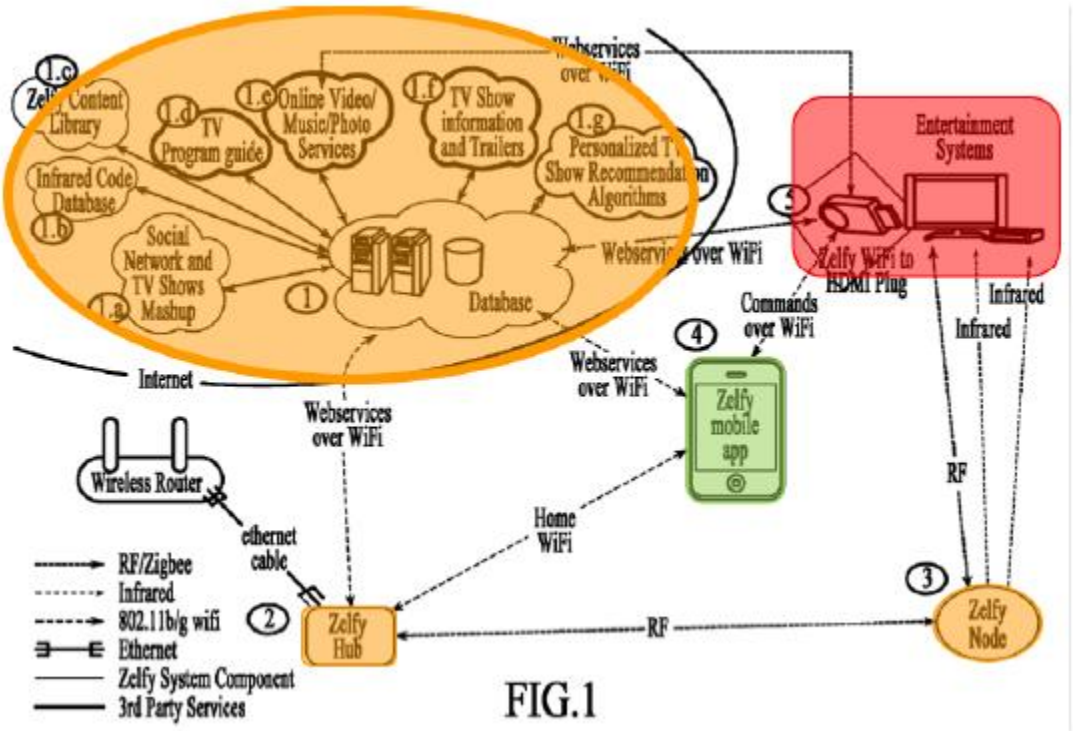

(Pet. 22). Muthukumarasamy's Figure 1 is "a block diagram of the Device-Based Control System (DBCS)" (Ex. 1008 ¶ 44), and in the annotated version above, Petitioner identifies the internet-enabled device (IED) in green as the claimed "personal computing device," the internet server, zHub, and zNode in orange as the claimed "server system," and the devices in red labeled "Entertainment Systems" as the claimed "display device" (Pet. 21 (citing Ex. 1005 ¶ 68)).

Petitioner asserts the internet server, a zHub, and a zNode "work together as a *server system* to receive messages and commands from an internet-enabled device, such as a smartphone," and relay corresponding commands to control a media device (display device), such as a TV" (Pet. 27). In particular, Petitioner asserts, "Muthukumarasamy's internet server

receives a message from the IED, which is separate from both the internet server and the media device (playback device)" (Pet. 31; *see also* Pet. 27 (asserting that "the 'zHub receives the command from the IED'")(quoting Ex. 1008 ¶ 57)). Petitioner contends, "Muthukumarasamy discloses signals specifying media content to be acted on by a particular video player" (Pet. 35). More specifically, Petitioner argues that "Muthukumarasamy teaches that the signals identify[] a particular media player for playing the video content for two reasons" (Pet. 37 (alteration in original; emphasis omitted)).

First, Petitioner argues, "Muthukumarasamy discloses a source-agnostic system that aggregates content choices from a multitude of disparate media sources, including 'subscription media, broadcast media, cable, DVR, VOD and internet media'" (Pet. 37 (quoting Ex. 1008 ¶ 47); *see also* Pet. 21 (identifying Netflix and Amazon Video On Demand as examples of streamed internet content)). Based on that disclosure, Petitioner argues a person having ordinary skill in the art "would have understood each request for particular content to identify a media player associated with the particular source of the content" (Pet. 37 (citing Ex. 1005 ¶ 98)).

Second, Petitioner contends, Muthukumarasamy's "IED sends commands to play, through [its] RCIBS, media content 'as specified by 3rd party using 3rd party APIs and Video Players,'" which cause the RCIBS to "load[] the 3rd Party Video Player specified and play[] the video with given video[-]id" (Pet. 38 (citing Ex. 1008 ¶ 45, Fig. 19) (fourth alteration in original)). As such, Petitioner argues a person having ordinary skill in the art "would have understood Muthukumarasamy to teach that the command sent from the IED specifies both the video (***a video file to be acted upon***)

and the Video Player to be loaded to play the video (***a particular media player for playing the content***)" (Pet. 38 (citing Ex. 1005 ¶ 99)).

Patent Owner argues Petitioner fails to demonstrate obviousness because of its reliance on two separate processes described in Muthukumarasamy, neither of which teaches the limitation identified above, without explanation as to why an ordinarily skilled artisan would have found it obvious to combine the processes (PO Resp. 31). In particular, Patent Owner argues Petitioner relies on Muthukumarasamy's ZHub/zNode process and RCIBS process, "using parts of each process for different limitations of the claimed methods" (PO Resp. 32 (citing Pet. 23, 51)). But, Patent Owner argues, neither process discloses all the limitations of the independent claims (PO Resp. 32).

More specifically, Patent Owner contends Muthukumarasamy describes two cases: the IED sending commands to (1) "the RCIBS over a local WiFi network . . . to access and present online media content" and (2) "the zHub . . . to control media devices that require infrared signals of the type used in conventional remote controls for TV sets" (PO Resp. 34 (citing Ex. 1008 ¶¶ 45, 56–60, 66–67, 83, Fig. 1; Ex. 2022 ¶¶ 127–128)). According to Patent Owner, only one of the RCIBS process and the zHub/zNode process "would be used in presenting any particular content" (PO Resp. 34 (citing Ex. 2022 ¶ 127)). However, according to Patent Owner, these two cases do not overlap because Muthukumarasamy does not disclose that the IED sends commands to the RCIBS using the zHub and/or zNode or that the zHub/zNode process is used to access or present online media content or any internet content (PO Resp. 35 (citing Ex. 2022 ¶ 127)).

According to Patent Owner, "Petitioner identifies Muthukumarasamy's internet server (1), zHub (2), and zNode (3), collectively, as the *server system*"; "IED (4), which includes a 'DBCS application or software' as the *personal computing device*"; "the 'Entertainment Systems' and 'Zelfy WiFi to HDMI Plug' (5) as part of the recited *display device*"; and "'remote-controlled internet browser software (RCIBS)' as part of the recited *display device*" (PO Resp. 33–34 (citing Ex. 1008 ¶¶ 44–45, 83; Pet. 20–24, 27; Ex. 1005 ¶¶ 68–69, 71, 86–88; Ex. 2021, 121:20–122:8; Ex. 2022 ¶¶ 116–118)). Patent Owner argues Petitioner's contention that "Muthukumarasamy discloses that its display device <u>loads any one of a plurality of different media players using the RCIBS</u> because it discloses loading one of a plurality of video players" (PO Resp. 35 (emphasis added by Patent Owner; quoting Pet. 23)) shows that Petitioner "relies on a *particular media player* allegedly loaded in the RCIBS during the RCIBS process" (PO Resp. 35–36). Patent Owner argues, however, that Petitioner "does not contend that any *particular media player* is loaded during the zHub/zNode process" (PO Resp. 36). Rather, according to Patent Owner, Petitioner relies on "the zHub/zNode process for *receiving, in the server system, one or more signals from the personal computing device*" while relying on the RCIBS process for "*messages identify a particular media player*", without asserting Muthukumarasamy's system would have been modified or why an ordinarily skilled artisan would have made such a modification (PO Resp. 36–37 (citing Pet. 34–35, 37–38))).

Patent Owner additionally argues the RCIBS process does not "*receiv*[*e*] *one or more signals from the personal computing device* in the components identified by Petitioner as the *server system*" (PO Resp. 38

(citing Ex. 1022 ¶¶ 135–138)). In particular, Patent Owner contends Petitioner sets out that Muthukumarasamy's RCIBS is part of the display device (PO Resp. 38 (citing Pet. 21–23; Ex. 1005 ¶ 71)). Patent Owner further contends "Petitioner identifies Muthukumarasamy's IED as the *personal computing device* of the claims and Muthukumarasamy's internet server, zHub, and zNodes, collectively, as the *server system*" (PO Resp. 38 (citing Pet. 27)). Patent Owner then asserts "[a]ny messages from the IED to the RCIBS, including those in Figure 19, would not use the internet server, zHub, or zNodes because they are transmitted directly to the RCIBS via the user's home network" (PO Resp. 38–39 (citing Ex. 2022 ¶¶ 114–118)).

Patent Owner annotates Muthukumarasamy's Figure 1, shown below, to illustrate that "none of the messages in step R1 are *received* <u>in the alleged *server system*</u> of Petitioner's mapping" (PO Resp. 39 (citing Ex. 2022 ¶ 135; Pet. 7)).

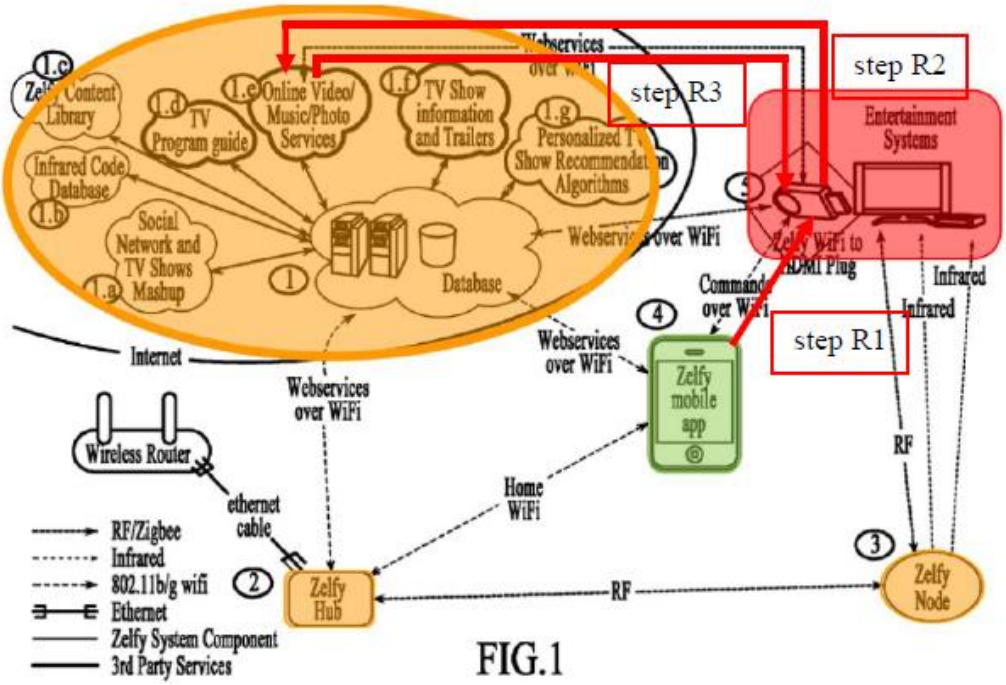

FIG.1

Figure 1 of Muthukumarasamy, as further annotated by Patent Owner, illustrates step R1 is communication between the entertainment system and IED (Zelfy mobile); step R2 is communication between the entertainment system and the server system; and step R3 is communication between the server system and entertainment system (PO Resp. 39 (citing Ex. 1008, Fig. 1)). According to Patent Owner, "[t]he 'commands' listed in Figure 19 of Muthukumarasamy are the only disclosed 'signals' involved in the RCIBS process" and "Petitioner never alleges that any other messages related to the operation of the RCIBS are *received in the server system*" (PO Resp. 39 (citing Pet. 10, 38, 44–46). Therefore, according to Patent Owner, "[b]ecause these *signals* are *received* in the alleged [*display*] *device* from the alleged *personal computing device*, Petitioner fails to show the RCIBS process satisfies the limitations of the claims" (PO Resp. 39–40 (citing Ex. 2022 ¶ 136)).

Patent Owner next argues Petitioner also asserts "that Muthukumarasamy generally discloses 'stream[ing] internet content over WiFi' into a browser-based media player" (PO Resp. 40 (alteration in original; citing Pet. 38; Ex. 1008 ¶ 45)). However, according to Patent Owner, "this disclosure is just a reference to the RCIBS, which 'is remote controllable internet browser software optimized for internet-media consumption'" (PO Resp. 40 (citing Ex. 1008 ¶ 83; Ex. 2022 ¶ 118)). Patent Owner asserts Petitioner admits Muthukumarasamy's disclosure "regarding 'internet content' is provided by the RCIBS, using the commands in Figure 19" (PO Resp. 40 (citing Pet. 38)). Patent Owner then contends, "Muthukumarasamy does not disclose any mechanism for streaming internet content besides the RCIBS" (PO Resp. 40 (citing Ex. 2022 ¶¶ 117, 137)).

Therefore, Patent Owner contends, Petitioner has failed to show Muthukumarasamy discloses

> receiving, in the server system, one or more signals from the personal computing device, the one or more signals specifying a video file to be acted upon and identifying a particular media player for playing the video content,

as recited in claim 1 (PO Resp. 41; Ex. 1001, 11:35–42).

We agree with Patent Owner that Petitioner has not shown that Muthukumarasamy teaches this subject matter. Initially, we note Petitioner annotates Figure 1 of Muthukumarasamy to identify the elements of claim 1 (Pet. 32). Petitioner contends, "Figure 1, annotated below, shows that the IED [highlighted in green] (***personal computing device***) is separate from the internet server, zHub, and zNode [highlighted in orange] ([collectively,] ***server system***), and the 'media device' 'Entertainment Systems' [highlighted in red] (***display device***)".

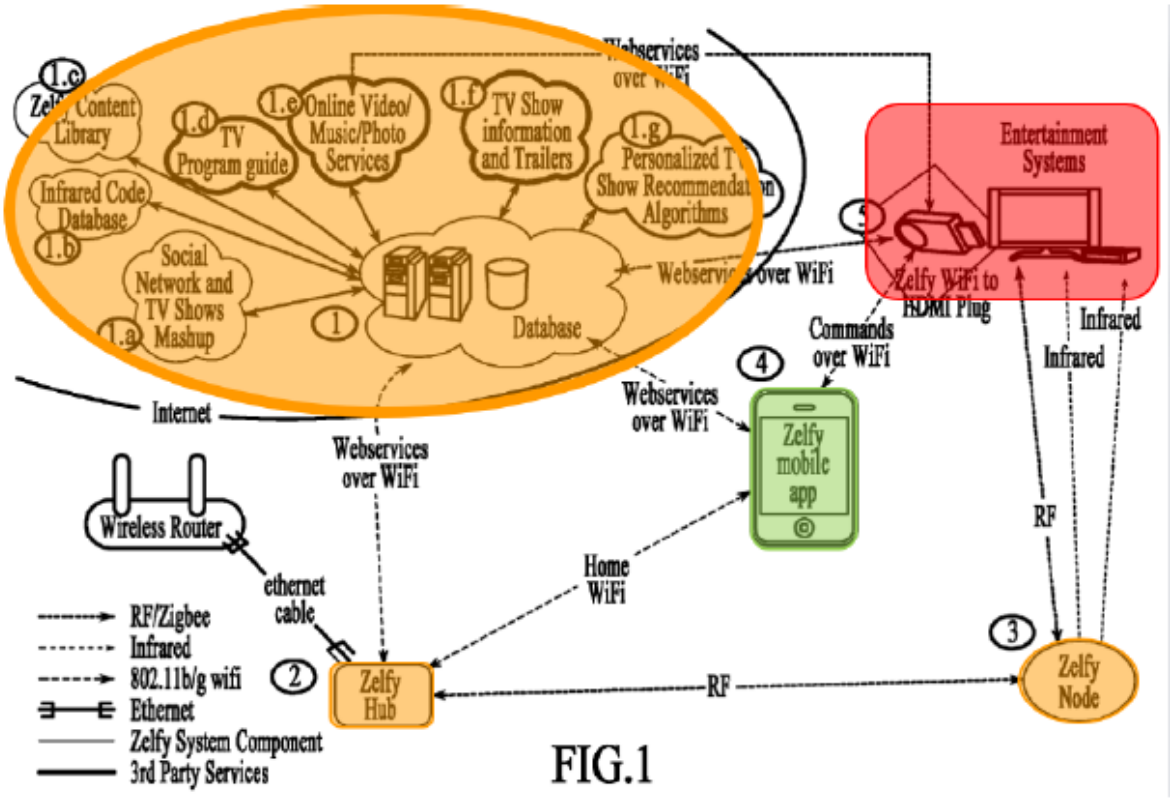

FIG.1

(Pet. 32–33 (reproducing Ex. 1008, Fig. 1 (annotated); Pet. 21–22)). Petitioner further contends,

> Muthukumarasamy's DBCS allows a user to the IED to select and control media played on different devices and from different media sources, including cable and streamed internet content (e.g., Netflix), onto a display device, such as a media device configured with RCIBS

(Pet. 20–21 (citing Ex. 1008 ¶¶ 26, 27, 31, 45, 83, 134)). Petitioner also argues, "the RCIBS, running on the display device, 'loads the 3rd Party Video Player specified and plays the video'" (Pet. 23 (quoting Ex. 1008 ¶¶ 25, 83, Fig. 19)). Figure 18 of Muthukumarasamy, annotated by Petitioner and reproduced below, is "a block diagram of a home network comprising the IED along with a computer hosting the RCIBS under an

embodiment" (Pet. 24; Ex. 1008 ¶ 24, Fig. 18).

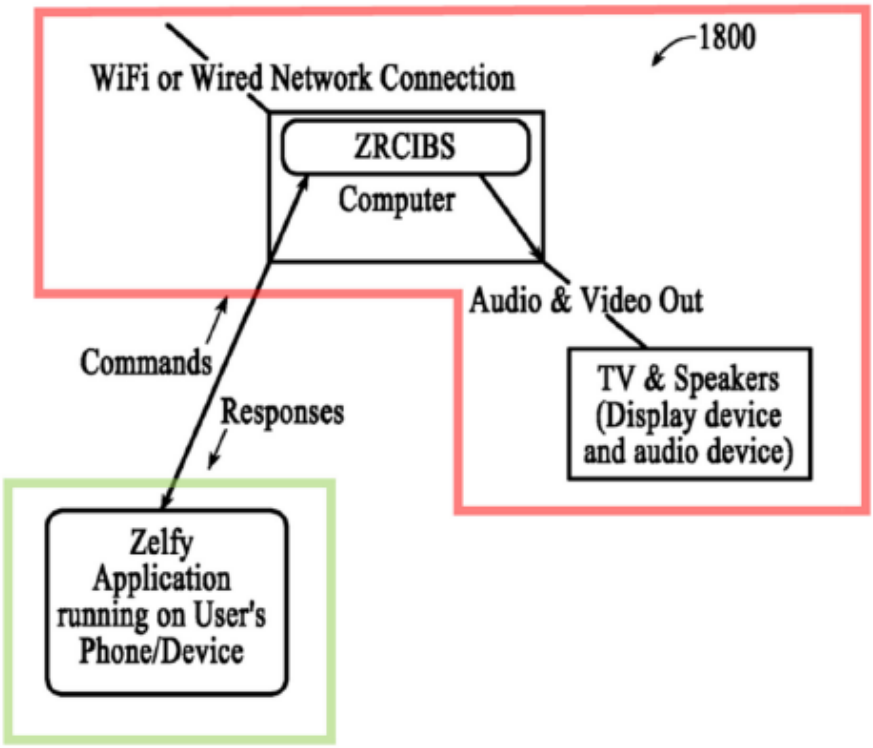

FIG.18

(Pet. 24 (reproducing Ex. 1008, Fig. 18 (annotated)). Figure 18 of Muthukumarasamy, shows an IED (i.e., "User's Phone/Device") sending commands to a ZRCIBS (also referred to as an "RCIBS" (*see* Ex. 1008 ¶¶ 24, 83, Fig. 18) hosted on a computer that provides output to a display device. In the annotated figure above, Petitioner includes the ZRCIBS of Figure 18 in a red box, red being the color Petitioner uses to designate the "display device" (Pet. 24).

Thus, Petitioner expressly identifies the RCIBS as part of the display device. Petitioner's contention that "the Petition maps the RCIBS as part of the claimed 'server system' (not part of the 'display device')" (*see* Pet. Reply 18) is incorrect, as made plain by the discussion above. More specifically, in its Reply, Petitioner contends that the "Petition states

repeatedly that the RCIBS is part of the DBCS, which the Petition maps to the 'server system,'" such that "signals sent from the IED to the RCIBS are sent to the 'server system'" (Pet. Reply 22 (citing Pet. 38)). This contention fails because Muthukumarasamy's DBCS includes the server as well as other components depicted in Figure 1, such as the software on IED 4 ("personal computing device") (Ex. 1008 ¶¶ 44–45, Fig. 1). Under Petitioner's Reply theory that the DBCS is the claimed "server system," Muthukumarasamy's disclosures of messages from the IED (part of the DBCS) to other components of the DBCS would simply disclose messages *within* a "server system," rather than messages from a "personal computing device" to a "server system." When asked in the Oral Hearing for citations in the Petition that would illustrate the RCIBS is part of the server and not the display device (Tr. 17:4–13), Petitioner did not identify any persuasive disclosure (Tr. 38:11–12 (asserting that Muthukumarasamy is "not taking a position necessarily on where the RCIBS is located"), 87:21–88:15 ("it is indifferent to the obviousness of these claims whether the RCIBS is on the server on not")).

Petitioner contends,

> Muthukumarasamy's IED sends commands to play, through the RCIBS, media content "as specified by 3rd party using 3rd party APIs and Video Players." In response, the RCIBS "loads the 3rd Party Video Player specified and plays the video with given video[-]id"

(Pet. 38 (alteration in original; quoting Ex. 1008 ¶ 45)). As shown in the block diagram of Figure 18, the home network comprises a computer hosting the RCIBS connected to a WiFi or Wired Network Connection (Ex. 1008 ¶ 83, Fig. 18). Muthukumarasamy describes that the RCIBS communicates with a Zelfy application running on a user's phone and

transmits audio and video to a TV and speakers (Ex. 1008 ¶ 83, Fig. 18). In particular, Figure 18 further shows "RCIBS is deployed on a computer that has video, audio and internet capabilities and is connected to the home network of the user" (Ex. 1008 ¶ 83, Fig. 18).

Figure 18 does not disclose any communication between the personal computing device (Zelfy Application running on User's Phone/Device) and components identified by Petitioner as the server system (Ex. 1008 ¶ 83, Fig. 18). Because signals to the RCIBS do not go through the identified "server system," Petitioner has not shown that the RCIBS disclosures teach "receiving, in the server system, one or more signals from the personal computing device," as recited in claim 1.

Petitioner further argues, "[e]ven if the RCIBS *itself* does not communicate with the IED through the zHub/zNode process (POR, 34), the computer, the display device (TV), and audio device (Speakers) working with the RCIBS do" (Pet. Reply 11 (citing PO Resp. 34)). Petitioner points to the commands transmitted for internet content from "Sky," arguing "one embodiment of which is a 'zSky software agent . . . installed on a media PC'" is a description consistent with the RCIBS (Pet. Reply 11 (citing Ex. 1008 ¶ 45)). Paragraph 45 of Muthukumarasamy discloses the following:

> The DBCS comprises a zHDStick that streams internet content over WiFi to High Definition television (HDTV). The DBCS comprises a zSky software agent that helps manage online media viewing on TV; the zSky agent can be hosted (e.g., preinstalled) on the zHDStick, or can be independently installed on a media PC, but the embodiment is not so limited

(Ex. 1008 ¶ 45). This disclosure does not provide any detail or description as to what the ZSky agent does besides "help manage online media" and does not refer to the process disclosed in Figure 18 (*see* Ex. 1008).

Petitioner argues "[t]he RCIBS is consistent only with the zSky software agent when installed on a media PC because Muthukumarasamy states, '[t]he RCIBS is deployed on a computer that has video, audio, and internet capabilities and is connected to the home network of the user'" (Pet. Reply 11 n.2 (Ex. 1008 ¶ 83)). Petitioner then argues,

> Muthukumarasamy envisions controlling, *e.g.*, "Play/Pause" of internet content being presented on a media device through Sky. Because control of the Sky internet content flows from the IED through the zNode and zHub to the media device . . . Muthukumarasamy discloses this very "overlapping use-case"

(Pet. Reply 11–12). Petitioner, however, does not direct us to any disclosure in Muthukumarasamy showing that commands to play content using "Sky" flow through the zNode and the zHub. Muthukumarasamy does not disclose that such a path would be used, and it is not clear why it would when zSky is internet connected.

Petitioner additionally argues, "while the RCIBS itself is software, it is hosted on a hardware device (e.g., computer)" and communication between the IED and the RCBIS, via computer, is over a "home network" and "the only connection labeled '*Home* WiFi'" in Figure 1 is that from the IED to the zHub (Pet. Reply 15–16 (citing Ex. 1008 ¶ 83; PO Resp. 24)). Thus, Petitioner argues, "[t]his suggests that, when presenting internet content via the RCIBS, that command flows through the zHub" (Pet. Reply 16 (citing Ex. 1008 ¶ 56)).

We do not find this argument persuasive because Muthukumarasamy's Figure 1 shows several "WiFi" paths that do not go through the zHub, including the path between IED 4 and Zelfy WiFi to HDMI Plug 5 labeled "Commands over Wifi" and the paths between the Database and each of Zelfy WiFi to HDMI Plug 5 and IED 4 labeled

"Webservices over WiFi." In Muthukumarasamy, Figure 18 illustrates "a block diagram 1800 of a home network comprising a computer hosting the RCIBS and the IED (Ex. 1008 ¶ 83), and it shows "Commands" and "Responses" communicating directly between the user's device and the RCIBS. Muthukumarasamy indicates that the "Wireless Router" in Figure 1 provides the WiFi network by defining "Router" as "an Internet switch that is coupled or connected to an internet cable or digital subscriber link (DSL) modem and enables a home network that is shared by one or more internet protocol (IP)-based devices (e.g., personal computer (PC), WiFi devices, etc.) in the home" (Ex. 1008 ¶ 37). Thus, based on Figure 18 and the description in the Muthukumarasamy, devices that are WiFi connected would communicate via the Router and bypass the "server system" identified by Petitioner.

Petitioner also argues that "[n]othing in Muthukumarasamy suggests the presentation of internet content on a media device——even a media device employing Muthukumarasamy's RCIBS——is 'separate' or 'distinct' from the zHubs/zNodes" (Pet. Reply 4). Petitioner's contentions rely on its characterization of Muthukumarasamy as disclosing a "source-agnostic system [that] allows selection and presentation of content from disparate sources, including 'subscription media, broadcast media, cable, DVR, VOD and internet media'" (Pet. 37 (citing Ex. 1008 ¶¶ 47–48)). Petitioner cites various disclosures showing that Muthukumaramy provides internet and non-internet content from disparate sources in a device-agnostic environment (Pet. Reply 5–10 (citing Ex. 1008 ¶¶ 5, 26, 27, 31, 36, 44, 45, 47, 48, 50–52, 57, 58, 61–62, 64, 68–70, 84, 134, Figs. 5, 6, 16)). Based on these disclosures, Petitioner contends, "Muthukumarasamy's RCIBS, zHub,

and zNode work together to provide the 'device-agnostic and source-agnostic entertainment experience'" (Pet. Reply 16).

Petitioner additionally contends, "[e]ven if the RCIBS *itself* does not communicate with the IED through the zHub/zNode process (POR, 38), the computer, the display device (TV), and audio device (Speakers) working with the RCIBS do" (Pet. Reply 11). Petitioner cites "Volume Up" as an example of a command that would be transmitted to a TV via the zHub/zNode process regardless of "whether the content is non-internet content from 'DVR/Blue-ray/ [and] VCR' or internet content from 'Sky'" (Pet. Reply 11 (alteration in original)).

We are not persuaded. Even if the zHub and the zNode would be used to control the volume on the TV on which the streamed content is displayed, this device cooperation does not show the particular messaging recited in the claim. More specifically, even under Petitioner's scenario that the "Volume Up" command flows from the IED ("personal computing device") through the zHub/zNode ("server system") to the TV ("display device"), this command does not "identify[] a particular media player for playing the video content." Petitioner has not shown any signals in Muthukumarasamy that "identify[] a particular media player for playing the video content" and flow from the IED through the zHub/zNode to the display device. Thus, Petitioner's assertions about devices working together fall short of proving by preponderant evidence that Muthukumarasamy discloses the particular signal contents and path recited in claim 1.

As noted above, Petitioner argues that "Muthukumarasamy teaches that the signals identify[] a particular media player for playing the video content for two reasons" (Pet. 34 (alteration in original; emphasis omitted)).

For the reasons explained above, Petitioner has not shown that the RCIBS disclosures teach the claimed subject matter.

Petitioner's other contention is that "Muthukumarasamy discloses a source-agnostic system that aggregates content choices from a multitude of disparate media sources, including 'subscription media, cable, DVR, VOD and internet media'" and "Muthukumarasamy 'controls delivery of selected media content and selects and controls the media devices that deliver the selected media content according to a media type of the selected media content'" (Pet. 37 (quoting Ex. 1008 ¶¶ 47–48)). Thus, according to Petitioner, "a [person of ordinary skill in the art] would have understood each request for particular content to identify a media player associated with the particular source of the content" (Pet. 37 (citing Ex. 1005 ¶ 98)).

In its Reply, Petitioner argues "Muthukumarasamy discloses that the zHub/zNode process is used to present internet content. In addition to the commands to control internet content presented through Sky[,] Muthukumarasamy contemplates using an 'Apple TV device' as a media device" (Pet. Reply 12–13 (Ex. 1008 ¶ 36)).

Petitioner also contends that "distinguish[ing] hardware device[s] from software applications fails, as even hardware devices involve software applications" (Pet. Reply 19). Petitioner then argues, "as Patent Owner's expert recognizes, many different types of content, including cable, DVR, and VOD, 'would all be provided through [the] set-top box'" (Pet. Reply 19 (alteration in original; quoting Ex. 2022 ¶ 152)).

Petitioner's arguments fail to show by preponderant evidence that messages identifying a particular media player, which the parties agree is software, would go from the IED through the zHub and zNode to the display

device. For example, Petitioner identifies Muthukumarasamy's disclosure of "disparate media sources, including 'subscription media, broadcast media, cable, DVR, VOD and internet media'" (Pet. 37 (quoting Ex. 1008 ¶ 47)). Even if we accepted the identification of "internet media" may entail the identification of a software media player, Petitioner's contentions fall short for not showing the required path through the zHub and zNode, as discussed above. For other sources of media, Petitioner fails to show any of these entails identifying a software media player. For example, cable and video on demand may be provided by a TV set-top box, and Muthukumarasamy discloses that, "when a user selects content that is on channel 324 to be displayed on the living room TV, the zHub translates the command into a specific RF signal directed at the zNode in the living room" (Ex. 1008 ¶ 57). Petitioner, however, does not present evidence that the signals that go through the zHub and zNode to turn on channel 324 "identify[] a particular [software] media player," as required of claim 1.

Petitioner argues that a set-top box presents different types of content and that "[t]o facilitate presentation of these different sources of content, the set-top box would need software applications for each content source" (Pet. Reply 19). Petitioner, however, does not direct us to evidence that any set-top box in Muthukumarasamy operates as such (Tr. 31:18–33:2). On the other hand, Patent Owner's declarant, Dr. Almeroth, testifies regarding tuning to a particular channel that, "[e]ven if the 'command' in this example identifies a particular hardware device, that is not a *media player*" and that "the alleged *messages* do not identify any software application that might qualify as a *media player*" (Ex. 2022 ¶ 151 (citing Ex. 1008 ¶¶ 57, 68–69, Fig. 15/6) (emphasis omitted)). Thus, the evidence of record does not show

that signals to select content via the zHub and zNode identify a software media player.

Petitioner notes that Patent Owner "has recently accused several set-top box devices of infringing the '251 patent, stating 'media player[s]' are 'loaded' at set-top boxes to present content, including 'live TV and DVR content'" (Pet. Reply 20 n.5 (alteration in original; citing Ex. 1018 ¶¶ 35, 55; Ex. 1019 ¶¶ 32, 38; Ex. 1020 ¶¶ 31, 37). Petitioner has not, however, proffered any persuasive reasoning explaining why Patent Owner's allegations in a 2023 complaint have any bearing on the question of what would have been obvious to a person of ordinary skill in the art at the time of the invention in 2011.

As to Petitioner's AppleTV assertions, Muthukumarasamy mentions that an "AppleTV" device can be used (Pet. Reply 9–10 (citing Ex. 1008 ¶¶ 36, 45)), but Petitioner does not show signals to the AppleTV would go through the zHub and zNode, as opposed simply to over a WiFi connection similar to the RCIBS. Rather, Petitioner contends the following: "Users '[u]sing the IED interface, . . . select[] the content and start[] enjoying the content' on a separate 'media device' (claimed display device) . . . such as a 'TV, DVD player, [and] Apple TV device'" (Pet. 19 (quoting Ex. 1008 ¶¶ 36, 77)). This allegation simply shows that a user selects content, which is then played in a manner transparent to the user on the display device.

Petitioner contends, "[b]ecause Muthukumarasamy teaches that the media device displays media content from various disparate sources depending on the media type and media source, a POSA would have understood the media device to load an appropriate media player depending on the media type and source" (Pet. 22–23 (citing 1005 ¶¶ 69–70); Pet. 20

(addressing preamble's recitation of "a display device that loads any[]one of a plurality of different media players" (citing Ex. 1005 ¶ 65)). Petitioner's declarant, Dr. Bederson, states "Muthukumarasamy . . . disclose(s) loading any one of a plurality of different media players on the content device" (Ex. 1005 ¶¶ 65–70). Neither Petitioner nor Dr. Bederson provide sufficient evidence or argument to support that Muthukumarasamy teaches obtaining or loading a media player in the zHub/zNode process. Petitioner contends,

> Muthukumarasamy discloses a source-agnostic system that aggregates content choices from a multitude of disparate media sources, including "subscription media, broadcast media, cable, DVR, VOD and internet media." Muthukumarasamy "controls delivery of selected media content and selects and controls the media devices that deliver the selected media content according to a media type of the selected media content." Because Muthukumarasamy teaches that the media device displays media content from various disparate sources depending on the media type and media source, a [person of ordinary skill in the art] would have understood the media device to load an appropriate media player depending on the media type and source

(Pet. 22–23 (citing Ex. 1008 ¶¶ 47–48; Ex. 1005 ¶¶ 69–71)). Petitioner, however, proffers insufficient evidence or argument that the content choices described in paragraph 47 of Muthukumarasamy would have led an ordinarily skilled artisan to understand a media player is obtained and loaded in the content presentation device. Rather, Dr. Bederson makes conclusory statements without providing evidence to support the assertions (Ex. 1005 ¶¶ 69–71).

Accordingly, we determine Petitioner has failed to show Muthukumarasamy teaches the limitations recited in claim 1. Therefore, based on the record before us, we conclude Petitioner has not established by

a preponderance of evidence that the subject matter of claim 1 would have been obvious over Muthukumarasamy.

3. Dependent claims 2 and 5–9

Petitioner contends claims 2 and 5–9 would have been obvious over Muthukumarasamy (Pet. 64–74 (citing Ex. 1001, 5:62–6:3; Ex. 1005 ¶¶ 138–144, 147–162; Ex. 1008 ¶¶ 31, 44, 45, 48, 50, 56, 68, 83, 134, Figs. 5, 14, 19)).

For the reasons set forth *supra*, we determine Petitioner has failed to show Muthukumarasamy teaches independent claim 1 from which these claims depend. As such, Petitioner has failed to show Muthukumarasamy teaches the limitations recited in claims 2 and 5–9. Therefore, based on the record before us, we conclude Petitioner has not established by a preponderance of evidence that the subject matter of claims 2 and 5–9 would have been obvious over Muthukumarasamy .

4. Conclusion

Based on the record before us, we determine Petitioner's proffered arguments, evidence, and supporting testimony fail to establish by a preponderance of the evidence claims 1, 2, and 5–9 would have been obvious over Muthukumarasamy.

E. Asserted Obviousness over Muthukumarasamy and Hayward

Petitioner contends claims 1, 2, and 5–9 would have been obvious over the combination of Muthukumarasamy and Hayward (Pet. 15–74).

1. Hayward (Ex. 1009)

Hayward is a U.S. patent titled "Method of Sizing an Embedded Media Player Page," and issued December 23, 2014 (Ex. 1009, codes (45), (54)). Hayward describes a "method of displaying video data using an embedded media player page" in which a "media player is launched within the embedded media player page" (Ex. 1009, code (57)). Hayward explains that a user, accessing a web page, "enter[s] search criteria for a media file, such as a streaming audio or video file" (Ex. 1009, 4:25–35). After the search is complete, "media files that satisfy the search request" are returned and displayed to the user who "may then decide to view the video data contained within a video file listed in the search results displayed to the user by clicking a link to one of the video files" (Ex. 1009, 5:6–12, 5:17–23). "When the user 'clicks' on a link to a selected video file, a script file, such as a JavaScript file, transmitted to the client . . . instructs the client to request the embedded media player page from the customer system" (Ex. 1009, 5:23–29).

The requested

> [e]mbedded media player page includes a reference to a functional media player object (such as a RealPlayer plug in). A reference is a tag (as a file locator as a universal resource indicator, URI, URL, or a file/object accessed through a directory structure) that refers to file, media object, or executable computer code stored in a memory structure

(Ex. 1009, 5:38–44). The "media player object generally is resident on the client, although the reference tag could trigger a download of a media player applet to control the output of a media file" (Ex. 1009, 5:44–47). "The embedded media player page includes video display area 202" for video playback (Ex. 1009, 5:61–66). In particular, the "media player is . . . an

object by the embedded media player page when launched (i.e., operated or run) within the embedded media player page" and plays the selected video (Ex. 1009, 6:35–42).

2. Claims 1, 2, and 5–9

Petitioner contends independent claim 1 would have been obvious over the combination of Muthukumarasamy and Hayward (Pet. 20–63 (citing Ex. 1001, 1:44–50, 2:16–26, 5:2–7, 5:54–6:17; Ex. 1005 ¶¶ 65–109, 111–136; Ex. 1008 ¶¶ 20, 25–27, 31, 36, 44, 45, 47–51, 57–58, 64, 68–70, 77, 83–85, 114, 116, 117, 134, 149, Figs. 1, 5, 6, 14, 15/1, 15/2, 15/3, 19; Ex. 1009, code (57), 1:11–13, 1:26–30, 2:9–12, 3:53–63, 4:9–19, 5:21–29, 5:38–6:4, 8:39–41, Figs. 1A, 2)).

Patent Owner contends Hayward does not cure the deficiencies of Muthukumarasamy because Muthukumarasamy's "disclosed processes that use the RCIBS do not involve the components alleged to be part of a *server* system" as previously argued (PO Resp. 42). Nor, according to Patent Owner, does Petitioner identify "any other way of combining Hayward's embedded media player pages with Muthukumarasamy" (PO Resp. 42 (citing Ex. 2022 ¶ 145; Pet. 15–20, 24–27, 38–41, 46–48, 51–52, 56–58, 62–63)). Patent Owner further argues Petitioner has not asserted the proposed combination would change that "the RCIBS is controlled by commands from the IED that are received by the RCIBS (identified as part of the *display device*) and not the alleged *server system*" (PO Resp. 42 (citing Ex. 2022 ¶ 143)). Thus, Patent Owner argues because "the RCIBS would continue to be part of the alleged *display device* . . . the identified signaling would still not satisfy the limitation of 'receiving, in the server system, one

or more signals from the personal computing device,'" as recited in claim 1 (PO Resp. 42 (emphasis omitted)).

We determine that Hayward does not cure the deficiencies of Muthukumarasamy discussed *supra*. In particular, Petitioner has not explained how Hayward teaches receiving the one or more signals in a system server. Rather, Petitioner relies on Hayward to teach "identify a particular media player for playing the video content" (Pet. 38–41). More specifically, Petitioner contends "a [person of ordinary skill in the art] would have been motivated by and found it obvious from Hayward to implement the DBCS (e.g., the RCIBS) to facilitate presentation of internet content at the display device using any number of media players through embedded media player pages, as described in Hayward" (Pet. 15, 40 (citing Ex. 1005 ¶¶ 60, 102)).

However, to the extent Petitioner's assertions rely on "implement[ing] the DBCS (e.g., the RCIBS) to facilitate presentation of internet content at the display device . . ." (Pet. Reply 22 (emphasis omitted)), we determine Petitioner has not shown the combined process of Muthukumarasamy and Hayward would include the required signals being received by the server (e.g., zHub/zNode), as opposed to directly by the RCIBS as discussed above. Additionally, Petitioner has not shown, for the zHub/zNode process, that Hayward cures the deficiencies of Muthukumarasamy as set forth above.

Additionally, because claims 2 and 5–9 depend from claim 1, we conclude Petitioner has not established by a preponderance of evidence that the subject matter of claims 2 and 5–9 would have been obvious over the combination of Muthukumarasamy and Hayward.

Thus, for the reasons explained *supra*, we find Petitioner has not established by a preponderance of evidence that the subject matter of claims 1, 2, and 5–9 would have been obvious over the combination of Muthukumarasamy and Hayward.

3. Conclusion

Based on the record before us, we determine Petitioner's proffered arguments, evidence, and supporting testimony fail to establish by a preponderance of the evidence that claims 1, 2, and 5–9 would have been obvious over Muthukumarasamy and Hayward.

III. CONCLUSION

For the reasons discussed above, we determine that Petitioner failed to prove, by a preponderance of the evidence, that claims 1, 2, and 5–9 of the '251 Patent are unpatentable, as summarized in the table below.

In summary:

Claim(s)	**35 U.S.C. §**	**Reference(s)/Basis**	**Claim(s) Shown Unpatentable**	**Claim(s) Not Shown Unpatentable**
1, 2, 5–9	103	Muthukumarasamy		1, 2, 5–9
1, 2, 5–9	103	Muthukumarasamy, Hayward		1, 2, 5–9
Overall Outcome				1, 2, 5–9

IV. ORDER

In consideration of the foregoing, it is hereby:

ORDERED that claims 1, 2, and 5–9 of the '251 Patent have not been shown to be unpatentable; and

FURTHER ORDERED that, because this is a Final Written Decision, parties to the proceeding seeking judicial review of the Decision must comply with the notice and service requirements of 37 C.F.R. § 90.2.

FOR PETITIONER:

Erika Arner
Kara Specht
Neal Larson
Gracie Mills
FINNEGAN, HENDERSON, FARABOW,
GARRETT & DUNNER, LLP
Erika.arner@finnegan.com
Kara.specht@finnegn.com
Neal.larson@finnegan.com
Gracie.mills@finnegan.com

FOR PATENT OWNER:

Sharon A. Israel
Kyle E. Friesen
SHOOK, HARDY & BACON L.L.P.
sisrael@shb.com
kfriesen@shb.com