US007269842B1

(12) **United States Patent**
Estipona

(10) **Patent No.: US 7,269,842 B1**
(45) **Date of Patent: Sep. 11, 2007**

(54) **TIME SHIFTING ENHANCED TELEVISION TRIGGERS**

(75) Inventor: **Jim B. Estipona**, Portland, OR (US)

(73) Assignee: **Intel Corporation**, Santa Clara, CA (US)

(*) Notice: Subject to any disclaimer, the term of this patent is extended or adjusted under 35 U.S.C. 154(b) by 1132 days.

(21) Appl. No.: **09/652,413**

(22) Filed: **Aug. 31, 2000**

(51) **Int. Cl.**
H04N 7/173 (2006.01)

(52) **U.S. Cl.** **725/134**; 725/131; 725/132; 725/139; 725/140; 725/142; 725/151; 725/152; 725/32; 725/25; 725/14; 725/9

(58) **Field of Classification Search** 725/27, 725/28, 29, 52, 54, 58, 136; 707/9–10
See application file for complete search history.

(56) **References Cited**

U.S. PATENT DOCUMENTS

5,390,027	A *	2/1995	Henmi et al.	386/65
5,818,441	A *	10/1998	Throckmorton et al.	345/717
5,937,331	A *	8/1999	Kalluri et al.	725/146
6,061,719	A *	5/2000	Bendinelli et al.	709/218
6,065,050	A *	5/2000	DeMoney	709/219
6,338,094	B1 *	1/2002	Scott et al.	709/245
6,351,467	B1 *	2/2002	Dillon	370/432
6,415,438	B1 *	7/2002	Blackketter et al.	725/136
6,460,180	B1 *	10/2002	Park et al.	725/40
6,473,137	B1 *	10/2002	Godwin et al.	348/725
6,560,777	B2 *	5/2003	Blackketter et al.	725/110
6,571,392	B1 *	5/2003	Zigmond et al.	725/110
6,574,795	B1 *	6/2003	Carr	725/71
6,591,420	B1 *	7/2003	McPherson et al.	725/29
6,643,692	B1 *	11/2003	Philyaw et al.	709/219
6,668,378	B2 *	12/2003	Leak et al.	725/136
6,725,461	B1 *	4/2004	Dougherty et al.	725/40
6,766,524	B1 *	7/2004	Matheny et al.	725/23
2002/0010926	A1 *	1/2002	Lee	725/40
2002/0056129	A1 *	5/2002	Blackketter et al.	725/112

FOREIGN PATENT DOCUMENTS

WO WO 01/26369 4/2001

OTHER PUBLICATIONS

Steinhorn et al., How to Enhance TV with ATVEF, Miller Freeman, Inc., 1999, pp. 1-8.*
Vijay, Computer Hardware and Software, Jan. 19, 1998, p. 4.*
Advanced Television Enhancement Forum Specification (ATVF), Version 1.1 revision 26, (Feb. 2, 1999).
Estipona, Jim B., Announcing the Availability of an Electronic Programming Guide to Receivers of Enhanced Television Transmissions, U.S. Appl. No. 09/652,695, filed Aug. 31, 2000.

(Continued)

Primary Examiner—Jason Salce
(74) *Attorney, Agent, or Firm*—Trop, Pruner & Hu, P.C.

(57) **ABSTRACT**

Enhanced television broadcasts including triggers with expires attributes may be utilized in a variety of situations where the expires attribute may adversely affect the utilization of the trigger. For example, in situations where the broadcast is recorded, playback may be enabled even after the trigger expiration. Similarly, local affiliates or FNOCs may rebroadcast enhanced television content by adjusting the expires attributes of the original trigger.

30 Claims, 8 Drawing Sheets

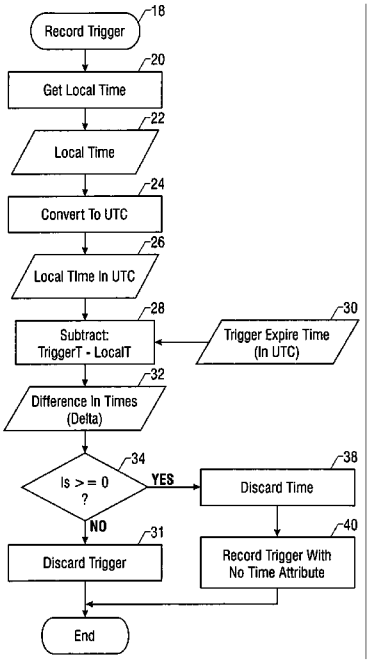

Comcast, Ex. 1132

OTHER PUBLICATIONS

Estipona, Jim B., "Mapping Enhancements to Network Identifiers", U.S. Appl. No. 09/652,692, filed Aug. 31, 2000.
Advanced Television Enhancement Forum (ATVEF), Enhanced Content Specification, Version 1.1, Revision 26, 1998-1999.
Web pages downloaded from http://www.replaytv.com, "What is Replay TV?", 1998-2000.
Web pages downloaded from http://tivo.com,"What is TiVo?", 2000.

* cited by examiner

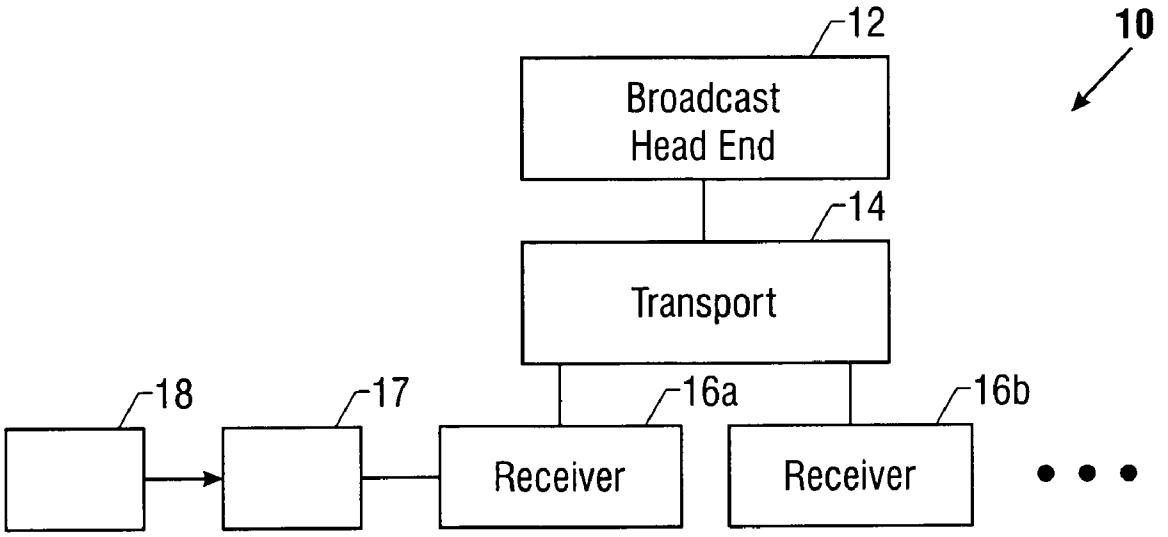
12
10
Broadcast
Head End
14
Transport
18
17
16a
16b
Receiver
Receiver

FIG. 1

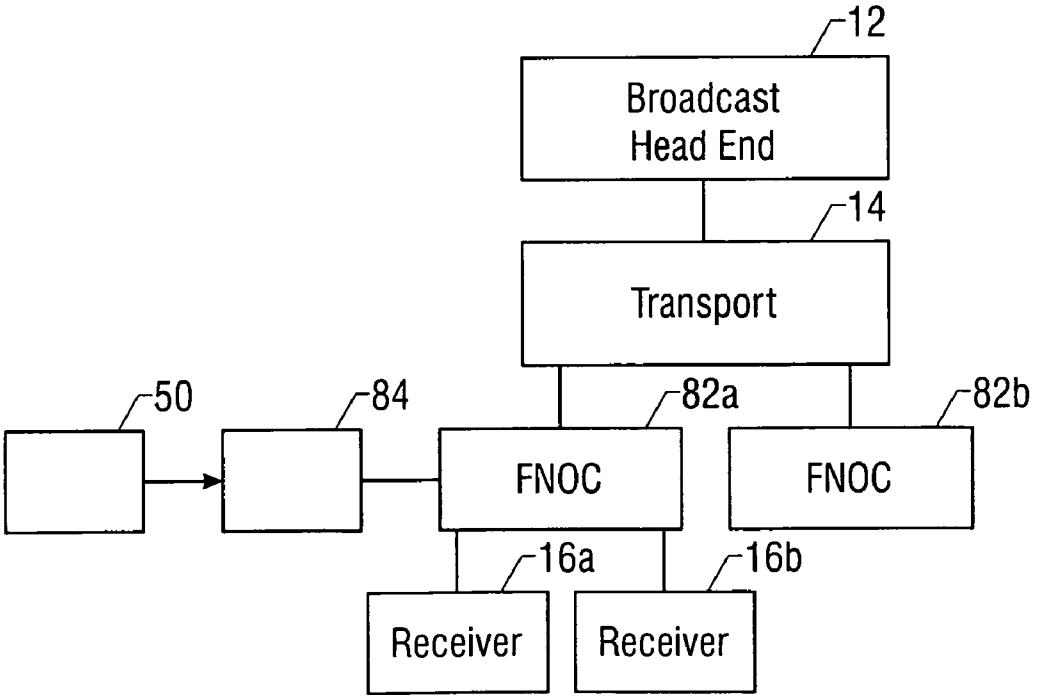
12
Broadcast
Head End
14
Transport
50
84
82a
82b
FNOC
FNOC
16a
16b
Receiver
Receiver

FIG. 3

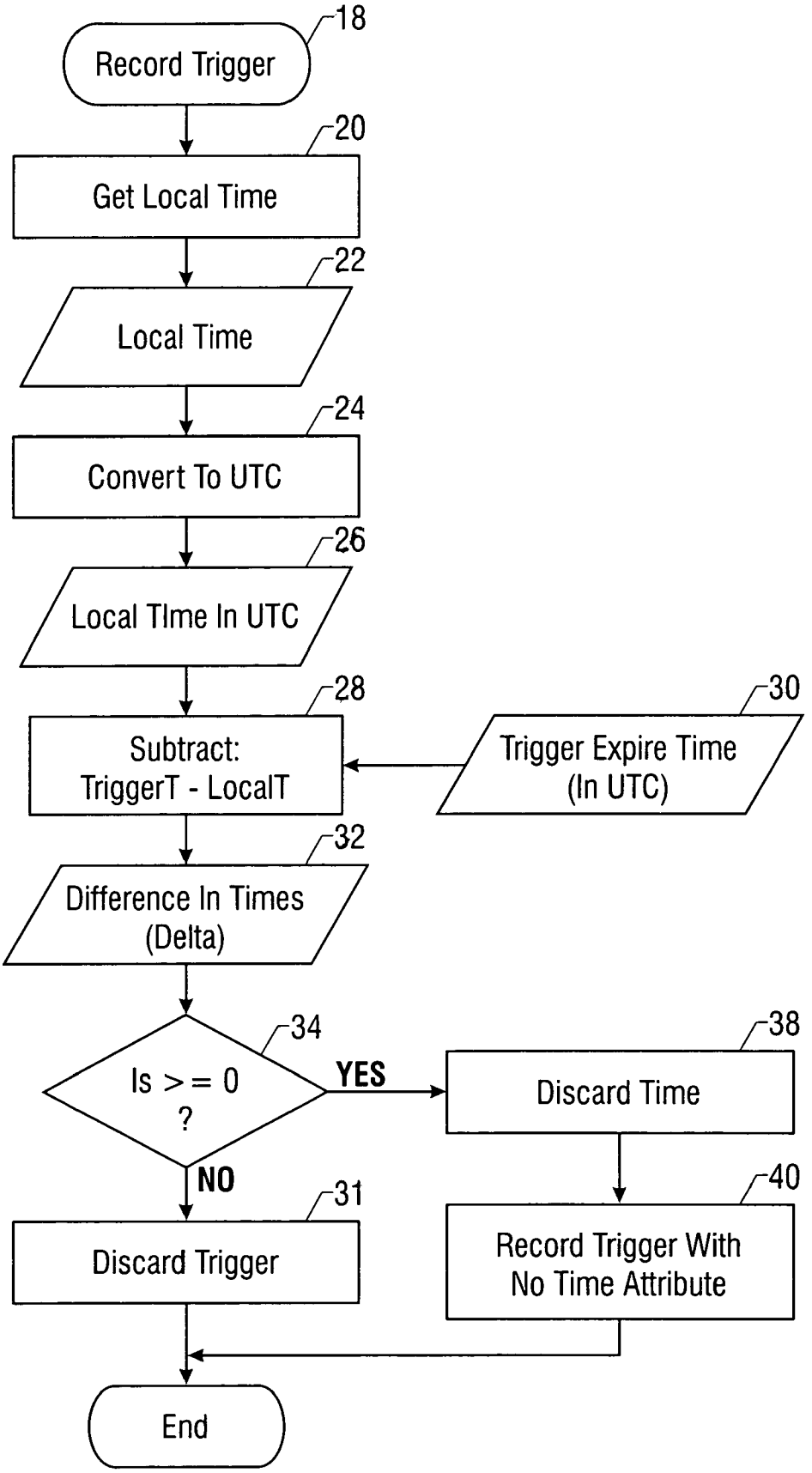
18
Record Trigger
20
Get Local Time
22
Local Time
24
Convert To UTC
26
Local TIme In UTC
28
Subtract:
TriggerT - LocalT
30
Trigger Expire Time
(In UTC)
32
Difference In Times
(Delta)
34
Is > = 0
?
YES
NO
38
Discard Time
40
Record Trigger With
No Time Attribute
31
Discard Trigger
End

FIG. 2

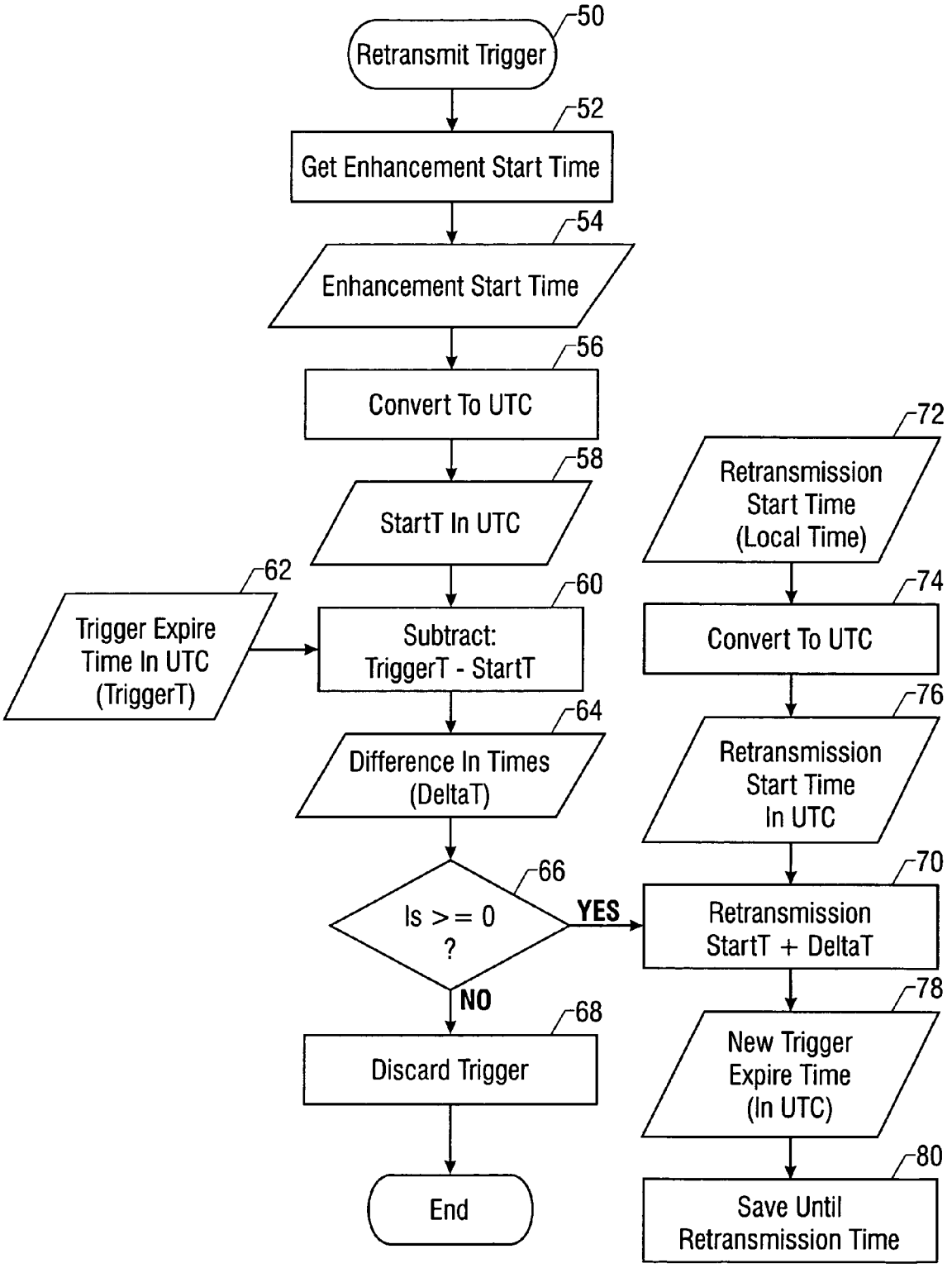
50
Retransmit Trigger
52
Get Enhancement Start Time
54
Enhancement Start Time
56
Convert To UTC
58
StartT In UTC
62
Trigger Expire Time In UTC (TriggerT)
60
Subtract: TriggerT - StartT
64
Difference In Times (DeltaT)
66
Is >= 0 ?
YES
NO
68
Discard Trigger
End
72
Retransmission Start Time (Local Time)
74
Convert To UTC
76
Retransmission Start Time In UTC
70
Retransmission StartT + DeltaT
78
New Trigger Expire Time (In UTC)
80
Save Until Retransmission Time

FIG. 4

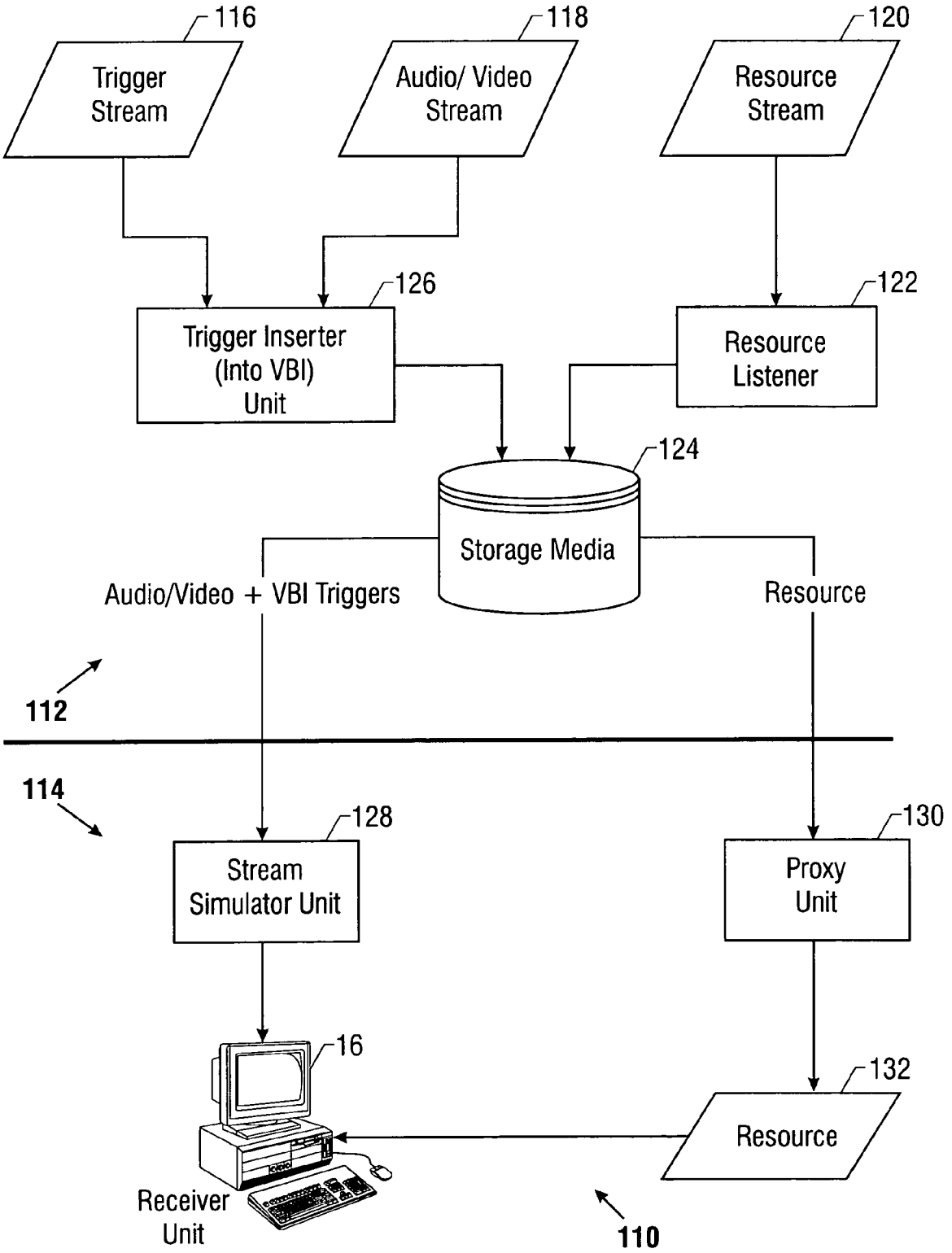
116
Trigger Stream
118
Audio/ Video Stream
120
Resource Stream
126
Trigger Inserter (Into VBI) Unit
122
Resource Listener
124
Storage Media
Audio/Video + VBI Triggers
Resource
112
114
128
Stream Simulator Unit
130
Proxy Unit
16
132
Resource
Receiver Unit
110

FIG. 5

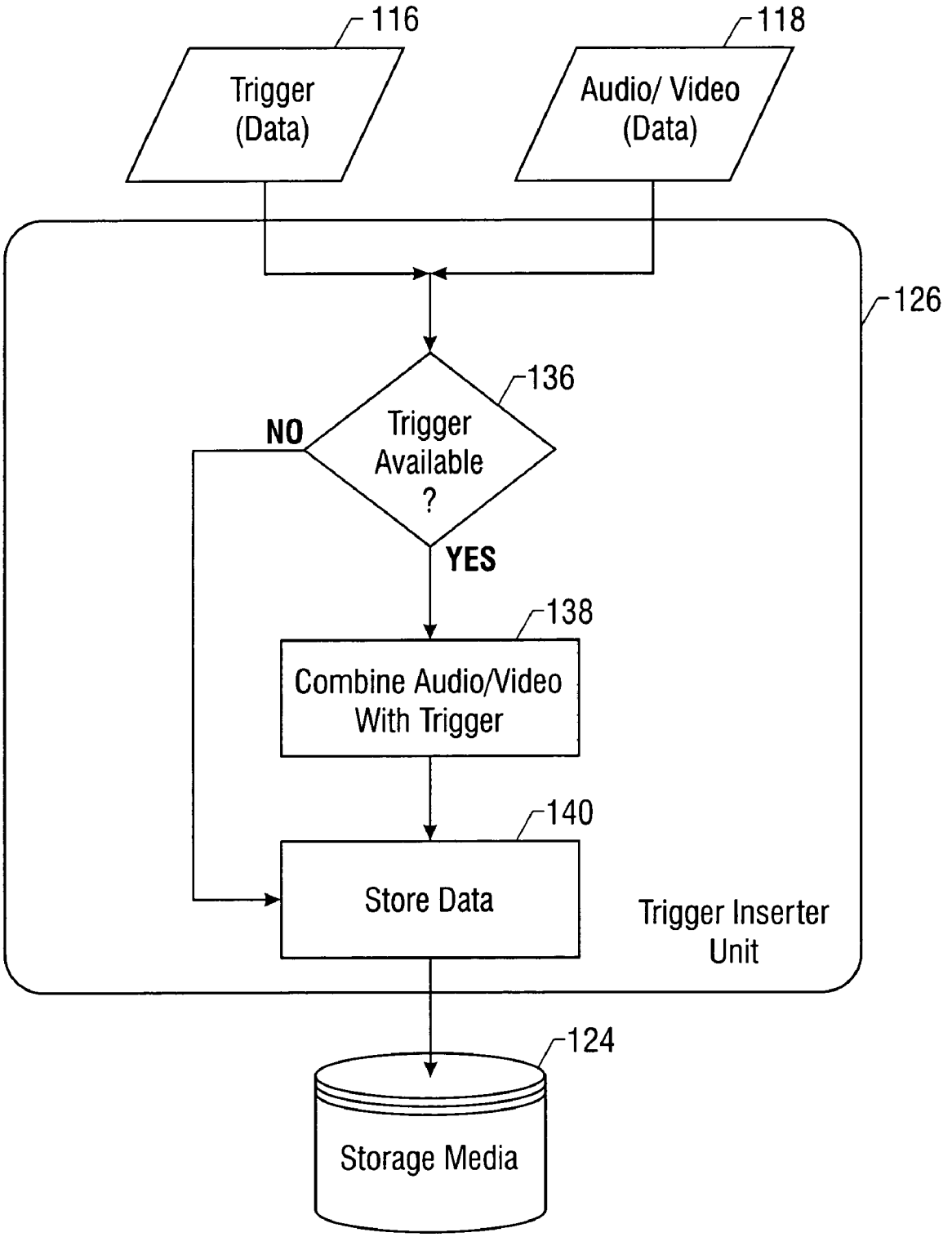
116
Trigger
(Data)
118
Audio/ Video
(Data)
126
136
Trigger
Available
?
NO
YES
138
Combine Audio/Video
With Trigger
140
Store Data
Trigger Inserter
Unit
124
Storage Media

FIG. 6

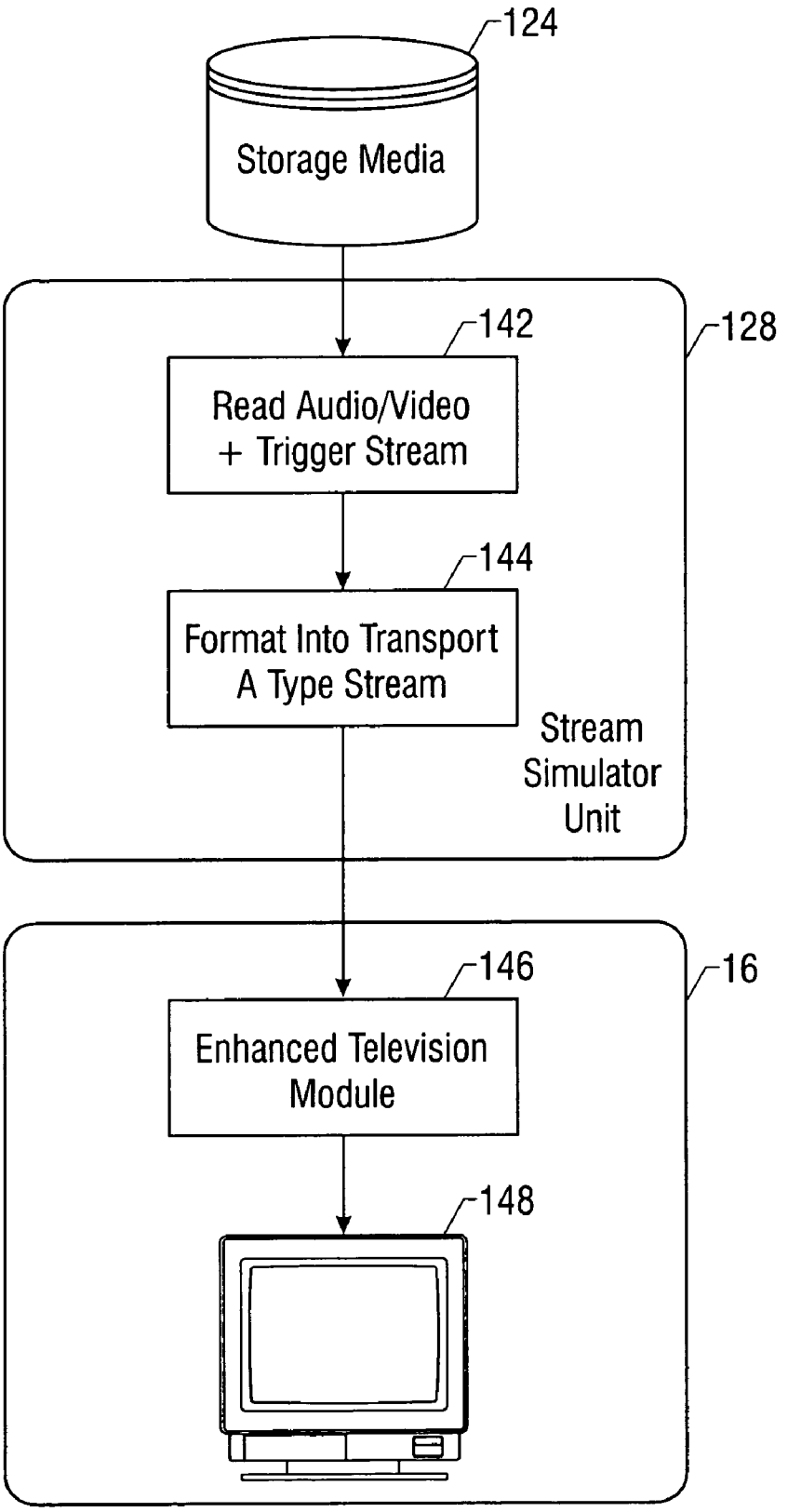
124
Storage Media
128
142
Read Audio/Video
+ Trigger Stream
144
Format Into Transport
A Type Stream
Stream
Simulator
Unit
16
146
Enhanced Television
Module
148

FIG. 7

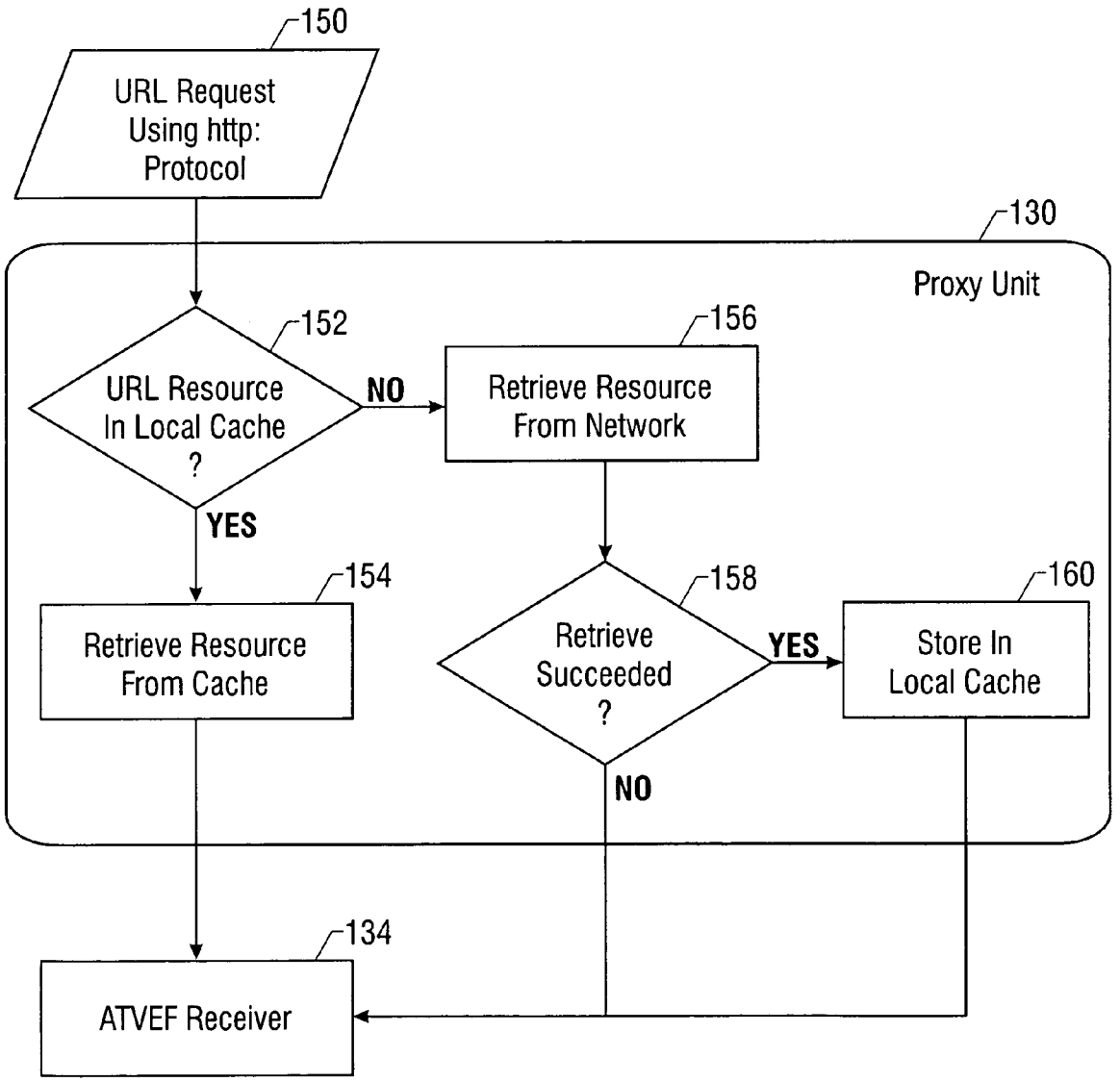
150
URL Request Using http: Protocol
130
Proxy Unit
152
URL Resource In Local Cache ?
NO
156
Retrieve Resource From Network
YES
154
Retrieve Resource From Cache
158
Retrieve Succeeded ?
YES
160
Store In Local Cache
NO
134
ATVEF Receiver

FIG. 8

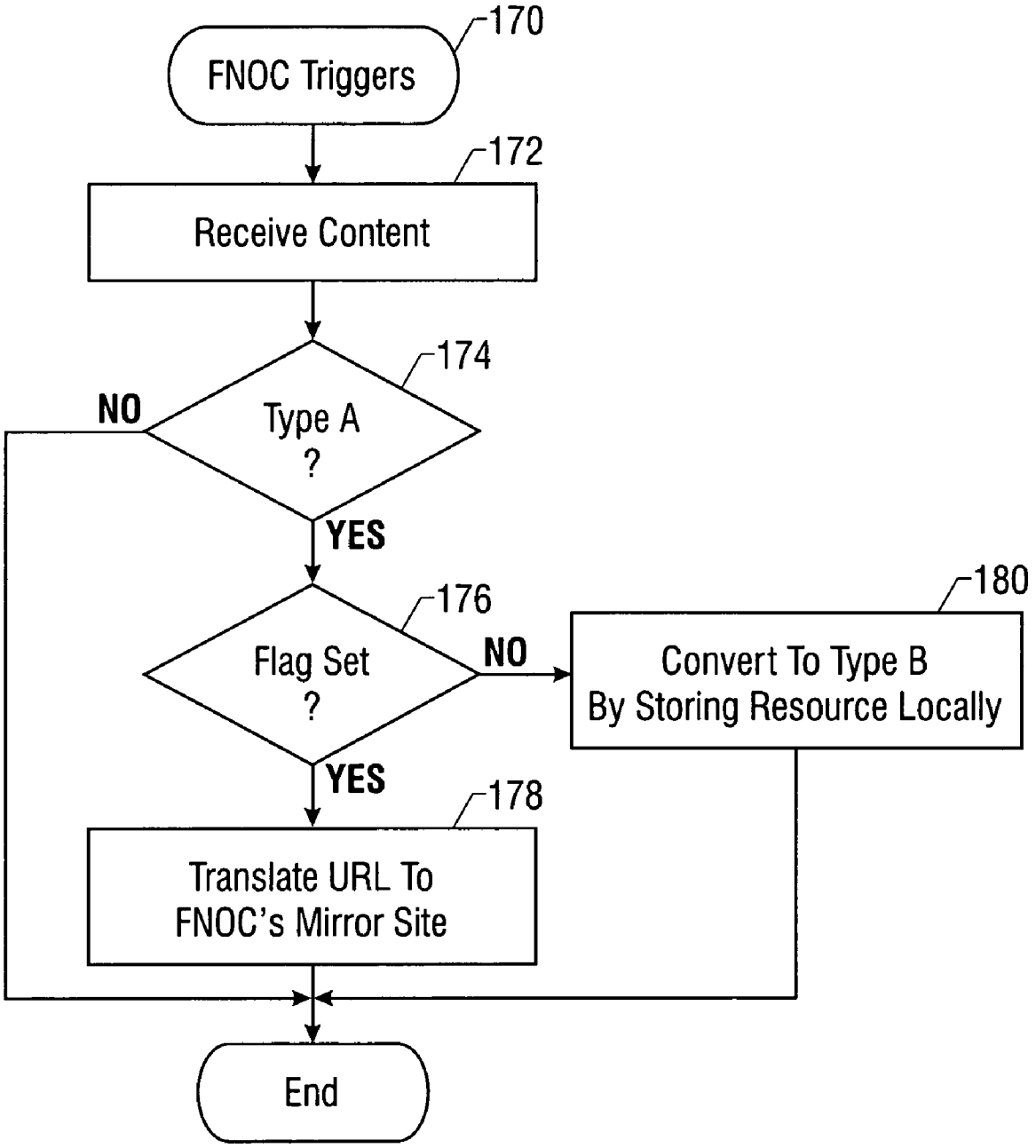
170
FNOC Triggers
172
Receive Content
174
Type A ?
NO
YES
176
Flag Set ?
NO
YES
180
Convert To Type B By Storing Resource Locally
178
Translate URL To FNOC's Mirror Site
End

FIG. 9

TIME SHIFTING ENHANCED TELEVISION TRIGGERS

BACKGROUND

This invention relates generally to enhanced television broadcasts including analog and digital broadcasts.

Enhanced television programming enables television programming, in analog or digital form, to be accompanied by additional content. In some embodiments, the additional content may be in the form of Internet-based content. With enhanced television technology, content creators (e.g., broadcasters) may transmit hypertext markup language (HTML) data along with the traditional television signals. Viewers may interact with the television broadcast via the Internet.

For example, enhanced features may be displayed on a television screen that enable the viewer to access the network's web site for related programming information. The related programming information may be additional advertising or additional details that are not readily incorporated into the television program itself, as examples. Thus, the user may selectively access additional information through an Internet connection.

A variety of standards exist for enhanced television broadcasts including the Advanced Television Enhancement Forum's (ATVEF) Enhanced Content Specification, Version 1.1, Revision 26, 1998-1999 (hereinafter referred to as the ATVEF specification). The ATVEF specification provides standards for the transmission and processing of triggers, resources and announcements together with television content to produce a digital or analog enhanced television transmission.

In order to announce the availability of interactive television resources, a trigger may be utilized. Announcements announce programming currently available to the receiver. A resource is a television enhancement or web content displayable in conjunction with a television broadcast as an enhanced or interactive program.

According to the ATVEF specification, there are two basic transport types, called transport type A and transport type B. In transport type A, the resource is accessed over the Internet and in transport type B, the resource is transmitted with the television content.

Triggers may include a Uniform Resource Locator and may optionally also include a human readable name, an expiration date and a script. Triggers that include a name attribute may be utilized to initiate enhancements either automatically or with user confirmation. The initial top-level page for an enhancement is indicated by a Uniform Resource Locator in the trigger. The script attribute provides a script fragment to execute within the context of the page containing a trigger receiver object.

The expires attribute provides a expiration time, after which the link is no longer valid. The expires attribute may be in the form [expires: 19971223] according to one example provided in the ATVEF specification.

In some cases, the link to the resource provided by the trigger may be caused to expire after a period of time. This may create problems. For example, in some situations, the enhanced television content may be retransmitted by a local affiliate or so-called franchise network operating center (FNOC). The FNOC may receive the broadcast and then retransmit it at an appropriate time, for example given the FNOC's local time zone. As a result, the expiration time may

come and go before the broadcast is ever even transmitted. In such case, a user may be unable to activate the link to obtain the resource.

Similarly, digital recording technology may be available to enable the user to actually record an enhanced broadcast. The user may subsequently attempt to replay the recorded broadcast and may be unable to activate the links to the resource because the links have expired.

Thus, there is a need to enable time shifted enhanced television content to be used effectively in a variety of circumstances.

BRIEF DESCRIPTION OF THE DRAWINGS

FIG. **1** is a schematic depiction of one embodiment of the present invention;

FIG. **2** is a flow chart for software in accordance with the embodiment shown in FIG. **1**;

FIG. **3** is a schematic depiction of another embodiment of the present invention;

FIG. **4** is a flow chart for software utilized in accordance with the embodiment shown in FIG. **3**;

FIG. **5** is a functional block diagram illustrating an embodiment of the invention;

FIG. **6** is a flow diagram showing operation of an illustrative type of trigger inserter unit that can be used with the embodiment shown in FIG. **5**;

FIG. **7** is a flow diagram showing operation of an illustrative type of stream simulator unit that can be used with the embodiment shown in FIG. **5**;

FIG. **8** is a flow diagram showing operation of an illustrative type of proxy that can be used with the embodiment shown in FIG. **5**; and

FIG. **9** is a flow chart for software in accordance with another embodiment of the present invention.

DETAILED DESCRIPTION

Referring to FIG. **1**, an enhanced television delivery system **10** may include a broadcast head end or server **12**. The head end or server **12** may provide the television content such as a television program and the enhanced content or at least a reference to the enhanced content. The enhanced television broadcast is transmitted from the head end **12** to a plurality of receivers **16** (although only the receivers **16***a* and **16***b* are shown in FIG. **1**). The enhanced content may be transported over a transport **14** which may be a cable, a satellite connection or a conventional television broadcast. The enhanced content may be in analog or digital format.

Each receiver **16** may include a storage **17** that stores software **18**. The receiver **16** may be a processor-based system. As examples, the receiver **16** may be a desktop computer, a laptop computer, a handheld computer, a set-top box or other processor-based appliance with a suitable connection to receive the enhanced content over a transport. The software **18** enables the enhanced content to be time shifted despite the presence of triggers with expiration times.

Referring to FIG. **2**, the software **18** handles the situation where a receiver **16** is utilized to digitally record an enhanced television broadcast. The user may record not only the programming, but also the accompanying triggers. A trigger may be in the form of a Uniform Resource Locator (URL) used to access enhanced content over the Internet or may be a reference to a local storage location of a referenced resource.

Of course, if the trigger has an expiration time, the user may attempt to access the resource via the trigger long after the trigger has expired. In such case, the user may be unable to access the trigger even in the situation where the resource is actually still accessible.

Referring to FIG. **2**, the software **18** initially obtains the local time as indicated in block **20**. The local time may be stored as indicated in block **22**. The local time may then be converted into Universal Coordinated Time (UTC), as indicated in block **24**, and stored as indicated at **26**.

The trigger expiration time may be extracted from the video stream as indicated at **30**. The current local time (LocalT) is then subtracted from the trigger expiration time as indicated in block **28**. The result is a delta time as indicated at **32**. If the delta time is negative, the trigger has already expired and it may simply be discarded as indicated in block **31**.

Otherwise, as determined in diamond **34**, if the delta time is zero or positive, the expires attribute may be discarded as indicated in block **38**. The trigger may then be recorded with the other enhanced television content without a expires attribute. In effect then, a trigger with an expires attribute is converted into a format in which the expires attribute is removed. The absence of an expires attribute is permissible under the ATVEF specification.

The resulting trigger is then capable of being exercised at any time. If the resource is stored locally (i.e. via a Type B transport), that resource can then be acquired anytime the trigger is selected. If the resource is accessed externally (i.e. via a Type A transport), the resource may not always be active. In such case, the trigger may not be capable of accessing the remote resource.

However, if desired, the remotely accessible resource may be accessed upon acquisition of the trigger and the resource may thereafter be stored locally for subsequent local access. Alternatively, the trigger's Uniform Resource Locator may be modified to a local storage address to access the locally stored resource.

Referring to FIG. **5**, a system **110**, in accordance with one embodiment for recording analog enhanced television broadcasts includes a recording component or "recorder" **112**, and a playback component or "player" **114**. According to one embodiment of the invention, the recorder **112** stores Transport Type B streams (and can also store Transport Type A streams), while the player **114** can transform and play the stored streams as Transport Type A streams.

An enhanced television Transport Type B transmission includes a trigger stream **116**, an audio/video stream **118**, a resource stream **120**, and an announcement stream (not shown). The audio/video stream **118** may be a National Television Standards Committee (NTSC) signal. In operation, announcements are sent before or during a television program to a well-known Internet Protocol (IP) address and port number to announce the availability of enhancements. A receiver tunes in to this IP address/port and receives information about how to receive trigger and resource information, where the trigger typically includes a URL that points to a location of the resource.

If resources in the resource stream **120** are extracted by a resource listener **122**, such resources are typically stored in a storage media **124**, which may be a cache, for example. The storage media **124** may also be a hard disk, floppy disk, digital versatile disk, random access memory (RAM), compact disk, or other suitable machine-readable storage medium. The resource listener **122** may be programmed to reject duplicate or outdated resources, such that only the appropriate resources are stored in the storage media **124**.

When the resources are stored in the storage media **124**, the trigger(s) corresponding to those stored resources typically include a local identifier URL (e.g., a lid: URL), meaning that the resources were delivered using a one-way broadcast and are not available on-demand. As such, Transport Type B is used for a true broadcast of both resource data and triggers and can run without an Internet connection. An optional Internet connection can provide a return path if the triggers point (e.g., by using http: or ftp: URLs) to resources that are available on the Internet (e.g., for e-commerce or web browsing).

Transport Type A involves the delivery of triggers along with the audio/visual stream **118**. That is, existing Transport Type A transmissions often transmit triggers on the vertical blanking interval (VBI) of the NTSC video signal. Transport Type A transmissions may not transmit a resource stream **120** or an announcement stream. Hence, Transport Type A systems usually use two-way Internet connections to fetch resources using http:.

The system **110** includes a trigger inserter unit **126** for the recorder **112**, and a stream simulator unit **128** (which can be likened to a Transport Type A stream simulator) and a proxy unit **130** for the player **114**. The end result is that one or more resources **132** may be provided to a receiver unit **16**, from the storage media **124**, without having to unnecessarily retrieve the resources **132** from the Internet. Furthermore, using the trigger inserter unit **126** to insert triggers into the video signals (e.g. into the VBI) of the audio/video stream **118** provides synchronization between the trigger stream **116** and the audio/video stream **118** that is not present in conventional Transport Type B systems.

Operation of an embodiment of the trigger inserter unit **126** of the recorder **112** is illustrated in a flow diagram in FIG. **6**. The trigger inserter unit **126** can be embodied in software, hardware, or a combination of both, and uses data from the trigger stream **116** and data from the audio/video stream **118** as inputs.

At a block **136**, the trigger inserter unit **126** first determines if there is a trigger available in the received broadcast. If the received broadcast is a Transport Type A transmission, such triggers, if any, may be in the VBI of the audio/video stream **118** for examples. The triggers are extracted and evaluated for validity as part of the receiving process. If the triggers are valid, the trigger inserter unit **126** stores the data from the audio/video stream **118** (and its associated valid triggers) into the storage media **124** at block **140**.

If a Transport Type B transmission is present, then the trigger inserter unit **126** detects the availability of valid triggers from the trigger stream **116** at block **136**. At block **138**, the trigger inserter unit **126** combines the trigger data with the audio/visual data. More specifically, according to an embodiment of the invention, the trigger inserter unit **126** inserts triggers into the VBI of the audio/visual stream **118**. In this manner, the Transport Type B stream is "transformed" into Transport Type A stream prior to storage into the storage medium **124** at the block **140**. Accordingly, by inserting the triggers into the VBI, as the trigger stream **116** and the audio/visual stream **118** are received, the triggers are synchronized in time with the audio/visual data by presenting the triggers along with their corresponding video frames.

At block **140**, the trigger inserter unit **126** stores the data into the storage media **124** using a suitable type of audio/video streaming and storage format. Formats such as RealVideo™/RealAudio™, Flash™, QuickTime™, Audio Video Interleaved (AVI), Motion Pictures Experts Group (MPEG), DVD, etc. may be used.

The trigger may include URLs pointing to locations of resources. These URLs may be in the form of lid: URLs pointing to the storage media **124** if the corresponding resources were extracted from the resource listener **122** and subsequently stored in the storage media **124**. The URLs in the trigger may also be http: URLs if the corresponding resource is available both from the storage medium **124** and from the Internet. Similarly, other URL schemes, such as ftp:, may be used by the triggers to denote the location of resources available from the storage media **124** or from the Internet.

In one embodiment, the resource listener **122** extracts resources from the resource stream **120**, regardless of its specific URL, and then stores these resources in the storage media **124**. The manner of retrieving stored resources from the storage media **124**, rather than from an external Internet source, is described in further detail below with respect to the proxy unit **130**.

FIG. **7** shows an embodiment of the stream simulator unit **128** that can be used by the player **114**. The stream simulator unit **128** may be embodied in software, hardware, or a combination of both. In operation, the stream simulator unit **128** reads, from the storage media **124**, the stored audio/video stream **118** and the trigger stream **116** at a block **142**. In some embodiments, the stream simulator unit **128** may format the resulting stream at a block **144**, in order to make the resulting stream compatible with the format used by the applicable presentation/display application software. For example, if Microsoft Window's DirectShow™ is used as the presentation software, then the stream simulator unit **128**, at the block **144**, can format the resulting stream into the DirectShow™ architecture using libraries in the Windows environment.

Next, the stream simulator unit **128** provides the simulated Transport Type A stream to the receiver **16**. As an example, the receiver **16** may comprise a conventional television set as the display unit **148** and having the enhanced television module **146** as a separate unit coupled to the television set. The enhanced television module **146** may have the capability to receive enhanced television broadcast data, display/announce the enhanced television features to the user, and then provide the user with interfaces to allow the user to input information (e.g., to interact) with the enhanced broadcast.

Operation of the player **114** using the receiver **16**, the stream simulator unit **128**, and the proxy unit **130** is shown in FIG. **8** in accordance with one embodiment of the invention. The proxy unit **130** may be thought of as an "http: proxy" in that it intervenes in the retrieval of resources **132** having http: URLs. The proxy unit **130** can also be made to intervene and retrieve resources **132** having lid: URLs or other protocol resources, such as a resource having an ftp: URL. That is, the proxy unit **130**, in one embodiment, may comprise a thin/simple agent that can reroute a resource request and retrieve the requested resource from a local cache (e.g., from the storage media **124**) if available, but relinquishes or invokes a normal http: handler to perform the retrieval if the requested resource is not in the local cache (and assuming that an uplink or back channel to the Internet is available).

The proxy unit **130** may be embodied in software, hardware, or a combination of both. In one embodiment, the proxy unit **130** can comprise a set of software communication instructions or settings in a registry of an operating system of a PC, for example.

In one example, when the receiver **16** receives an enhanced television broadcast, in a simulated Transport Type A stream format having triggers inserted in the VBI, the user can request the resources **132** or the receiver **16** can automatically request the resources **132**. If the receiver **16** is Transport Type A-enabled, the requested resources **132** are retrieved externally from the Internet. Therefore, at a block **150** in FIG. **8**, the receiver **16** sends a URL request for the resource **132** using http: protocols. If the trigger included a lid: URL, rather than an http: URL, then the receiver **16** and/or proxy unit **130** can retrieve the resource **132** directly from the storage media **124**, which may be a local cache.

At diamond **152**, the proxy unit **130** intercepts the http: request from the receiver unit **134** and determines if the resource **132** is in the storage media **124**. If it finds the resource **132** in the storage media **124**, then the resource **132** is retrieved from the storage media **124**, as indicated at block **154**, and is provided to the receiver **16** for display and/or other use by the receiver **16**. As indicated at diamond **152**, the proxy unit **130** may retrieve resources **132** having lid: URLs from the storage media **124**, as well as resources **132** having http: or ftp: URLs from the storage media **124**, if the resources **32** are stored there, or externally from the Internet.

If the proxy unit **130** does not find the requested resource **132** in the storage media **124**, then at a block **156**, the proxy unit **134** may attempt to retrieve the resource **132** from the network (e.g., from the Internet). If the retrieval is unsuccessful as determined at **158**, then a failure message is sent to the receiver **16**. In response, the receiver **16** may cause the proxy unit **130** to try again, or the receiver **16** may display a message to the user on the display unit **148** to notify the user of the unavailability of the resource **132** or other appropriate response.

If the resource **132** is successfully retrieved by the proxy unit **130**, then the retrieved resource **132** can be stored in the storage media **124**, as indicated at block **160**, and then subsequently provided to the receiver **16**, thereby providing the user with enhanced television content and features.

Embodiments of the invention may transform Transport Type B streams into a simulated Transport Type A stream by inserting triggers into the video stream. The recorder **112** stores resources and the transformed stream in the storage media **124**. During playback, the player **114** may read the triggers in the stored simulated Transport Type A stream from the storage media **124** and use the proxy unit **130** to retrieve requested resources from the storage media **124** or externally from the Internet, if the resource is not already stored. As such, Transport Type B transmissions appear like and are treated like Transport Type A transmissions by the receiver unit **134**.

Referring next to FIG. **3**, an embodiment with a regional affiliate or FNOC **82** includes a broadcast head end **12** and transport **14** as described previously. The FNOCs **82***a* and **82***b* receive the enhanced television programming over the transport **14** and then provide the programming to local receivers **16**. The local receivers **16***a* and **16***b* may receive the broadcast over still another transport (not shown).

Each FNOC **82** may include a storage **84** that stores software **50**. The FNOCs **82** may include a processor-based system that is capable of executing the software **50** stored on the storage **84**.

If the FNOC rebroadcasts the enhanced broadcast at a later time than was originally intended, an issue arises with respect to trigger expiration. For example programming originating in one time zone may be provided to a FNOC **82** in another time zone. The FNOC **82** may determine that it is most appropriate to time shift the programming to an appropriate local time zone, time slot for rebroadcast. How-

ever, in some cases, the triggers may be expired by the time the material is actually retransmitted.

The software **50** accounts for this potential transmission time shifting by the FNOC and adjusts the expires attribute accordingly. Referring to FIG. **4**, the software **50** begins by obtaining the FNOC's enhancement start time or the scheduled time for the program to start (StartT) as indicated in block **52**. The enhancement start time indicated in block **54**, is converted to UTC at **56** and as indicated at **58**.

The trigger expire time (TriggerT) is extracted from the enhanced television stream as indicated at **62**. The enhancement start time (StartT) is then subtracted from the trigger expire time (TriggerT) as indicated in block **60**. This results in a delta time (DeltaT) as indicated at **64**.

A check at diamond **66** determines whether the delta time is greater than or equal to zero. If not, the trigger is discarded as indicated in block **68**.

Otherwise, a retransmission time equal to the retransmission start time plus the delta time is utilized (block **70**) as the new expires attribute in the trigger. The retransmission start time or time that the FNOC will rebroadcast the enhanced programming in local time is acquired as indicated at **72**, converted to UTC as indicated in block **74** and stored as a retransmission start time as indicated at **76**. Thus, the retransmission start time as determined by the FNOC is then added to the delta time at block **70**, to create a new trigger expires attribute as indicated at **78**. This attribute is saved as indicated at block **80**.

As a result, the expiration time may be executed as originally intended at the head end. That is, the expiration time may be extended in accordance with local time to a predetermined amount of time after the initial broadcast. This effectuates the original intent of the expires attribute in the original enhanced television broadcast.

In the case of rebroadcasting data received via a Type B transport, the resource may be locally accessible and the handling of the triggers may be in accordance with the above description. However, in the case where the FNOC receives a Type A transport, simply adjusting the expires attribute without more may result in the situation where the resources may not be accessible because the web site addressed through the trigger may no longer be operable.

This problem may be handled in at least two different ways. Under one approach, the FNOC may automatically access the web site through the trigger's URL and download the content therein. The FNOC may then transmit the resource with the other enhanced content via a Type B transport. Alternatively, the FNOC may translate the trigger's URL to a mirror web site maintained by the FNOC. That is, the FNOC may acquire the content via the URL referenced by the trigger, and copy it over to the FNOC's own web site. The FNOC may then automatically translate the URL in the trigger to a new URL to enable access to the FNOC controlled web site. In this way, the FNOC can control the availability of the resource while maintaining a type A transport.

Referring to FIG. **9**, software **170** may be stored and utilized in conjunction with the software **50**. Initially, the content is received over the transport as indicated in block **172**. A check at diamond **174** determines whether the content is in the type A transport format. If not, the flow ends, and the triggers can be handled readily.

Conversely, if a type A transport is utilized, a check at diamond **176** determines whether a flag is set. In one embodiment of the present invention, the FNOC can set or unset a flag to select whether to convert the type A transport to a type B transport with a locally stored resource or to simply transition the data from the broadcaster's web site to the FNOC's web site. Thus, the FNOC can decide whether to use its own web site or to access the data from the broadcaster's web site and to transmit the data to the receiver **16**.

If the flag is not set, the data may be converted to a type B transport, storing the accessed resource locally as indicated in block **180**. That is, the FNOC accesses the resource from the broadcaster's web site, and then transmits the resource with the other content to the receiver **16**. Conversely, if the flag is set, the FNOC translates the broadcaster's URL to point to the FNOC's mirror site as indicated in block **178**.

In some embodiments of the present invention, time shifted transmissions or playback of enhanced television content may be accommodated despite the use of expires attributes in associated triggers. In this way, the expires attribute may be utilized but the system may not become unduly burdened by the expires attribute.

While the present invention has been described with respect to a limited number of embodiments, those skilled in the art will appreciate numerous modifications and variations therefrom. It is intended that the appended claims cover all such modifications and variations as fall within the true spirit and scope of this present invention.

What is claimed is:

1. A method comprising:

receiving an enhanced television transmission including a trigger that points to a resource and has an expires attribute indicating a trigger expiration time that prevents accessing said trigger after an expiration time; and

enabling the resource to be accessed after the trigger expiration time.

2. The method of claim **1** including rebroadcasting the enhanced television transmission.

3. The method of claim **1** including differencing the current time and the trigger expiration time.

4. The method of claim **3** including determining whether the trigger expiration time is greater than the current time and if not, discarding the trigger.

5. The method of claim **2** including determining whether the trigger expiration time is greater than the enhancement start time and if so, retransmitting the trigger with a trigger expiration time equal to the time when an enhanced television transmission will be rebroadcast plus the difference between the trigger time and the enhancement start time.

6. The method of claim **1** including recording said enhanced television, transmission for subsequent replay.

7. The method of claim **6** including differencing the current time and the trigger expiration time.

8. The method of claim **7** including determining whether the difference is greater than zero.

9. The method of claim **8** wherein, if the difference is not greater than zero, discarding the trigger before recording said enhanced television transmission.

10. The method of claim **8** including, if the difference is greater than zero, discarding the trigger expiration time and recording the trigger.

11. The method of claim **1** including receiving an enhanced television transmission having a trigger that refers to a remote resource, accessing said remote resource and storing said remote resource.

12. A computer readable medium encoded with a computer program to enable a processor-based system to:

receive an enhanced television transmission including a trigger that points to a resource and has an expires

attribute indicating a trigger expiration time that prevents accessing said trigger after an expiration time; and

enable the resource to be accessed and displayed after the trigger expiration time.

13. The medium of claim **12** further storing instructions that enable the processor-based system to rebroadcast the enhanced television transmission.

14. The medium of claim **12** further storing instructions that enable the processor-based system to subtract the current time from the trigger expiration time.

15. The medium of claim **14** further storing instructions that enable the processor-based system to determine whether the trigger expiration time is greater than the current time and if not, discard the trigger.

16. The medium of claim **12** further storing instructions that enable the processor-based system to determine whether the trigger expiration time is greater than the enhancement start time and if so, retransmit the trigger with a trigger expiration time equal to the time when the enhanced television will be rebroadcast plus the difference between the trigger time and the enhancement start time.

17. The medium of claim **12** further storing instructions that enable the processor-based system to record said enhanced television transmission for subsequent replay including both the television content and an enhancement accompanying said television content.

18. The medium of claim **17** further storing instructions that enable the processor-based system to difference the current time and the trigger expiration time.

19. The medium of claim **18** further storing instructions that enable the processor-based system to determine whether the difference is greater than zero.

20. The medium of claim **19** further storing instructions that enable the processor-based system to discard the trigger before recording said enhanced television transmission if the difference is not greater than zero.

21. The medium of claim **19** further storing instructions that enable the processor-based system to discard the trigger expiration time and record the trigger if the difference is greater than zero.

22. The medium of claim **12** further storing instructions that enable the processor-based system to receive an enhanced television transmission having a trigger that refers to a remote resource, access said remote resource and store said remote resource.

23. A system comprising:

a processor-based device; and

a storage coupled to said processor-based device storing instructions that enable said processor-based device to receive an enhanced television transmission including a trigger that points to a resource and has an expires attribute indicating a trigger expiration time that prevents accessing said trigger after an expiration time and enable the resource to be accessed after the trigger expiration time.

24. The system of claim **23** wherein said system is an enhanced television receiver with a broadcast recording device.

25. The system of claim **23** wherein said system is an enhanced television rebroadcast system.

26. The system of claim **25** wherein said storage stores instructions that difference the trigger expiration time and the enhancement start time.

27. The system of claim **26** wherein the trigger is discarded if the trigger has expired.

28. The system of claim **23** wherein said storage stores instructions that enable said system to receive enhanced television transmission having a trigger that refers to a remote resource, access said remote resource and store said remote resource.

29. The system of claim **28** wherein said storage stores instructions that enable said system to convert a type A transmission to a type B transmission.

30. The system of claim **28** wherein said system makes said resource available at a new location and translates said trigger to point to said new location.

* * * * *