IN THE UNITED STATES DISTRICT COURT
FOR THE EASTERN DISTRICT OF TEXAS
MARSHALL DIVISION

ADVANCED CODING TECHNOLOGIES LLC, Plaintiff, v. LG ELECTRONICS INC. and LG ELECTRONICS U.S.A., INC., Defendants.	Civil Action No. 2:22-cv-00501-JRG [LEAD CASE] JURY TRIAL DEMANDED
ADVANCED CODING TECHNOLOGIES LLC, Plaintiff, v. SAMSUNG ELECTRONICS CO., LTD., and SAMSUNG ELECTRONICS AMERICA, INC., Defendants.	Civil Action No. 2:22-cv-00499-JRG [MEMBER CASE] JURY TRIAL DEMANDED

DEFENDANTS' SECOND AMENDED INVALIDITY AND
SUBJECT MATTER ELIGIBILITY CONTENTIONS

Pursuant to Patent Rules 3-3 and 3-4, the Docket Control Order entered by the Court (Dkt. 46), and Paragraph 3(a)(ii) of the Discovery Order (Dkt. 56), Defendants Samsung Electronics Co., Ltd. ("SEC") and Samsung Electronics America, Inc. ("SEA") (collectively "Samsung,") and Defendants LG Electronics Inc. ("LGE") and LG Electronics U.S.A., Inc. ("LGEUS") (collectively "LG" and together with Samsung "Defendants") hereby provide their Second Amended Invalidity Contentions and accompanying document production with respect to the claims identified by Plaintiff Advanced Coding Technologies LLC ("ACT" or "Plaintiff") in its Amended Patent Rule 3-1 Disclosures.

Defendants' Second Amended Invalidity Contentions include the accompanying claim charts concerning U.S. Patent Nos. 6,845,128 ("the '128 Patent"); 8,090,025 ("the '025 Patent"); 8,139,150 ("the '150 Patent"); 9,445,041 ("the '041 Patent"); 9,986,303 ("the '303 Patent"); and 10,218,995 ("the '995 Patent") (collectively, the "Asserted Patents").[1]

Defendants also submit their Subject Matter Eligibility Contentions concerning the Asserted Patents in accordance with the Court's July 25, 2019, Standing Order Regarding Subject Matter Eligibility Contentions Applicable to All Patent Infringement Cases Assigned to Chief District Judge Rodney Gilstrap ("Standing Order") and the Docket Control Order.

I. Introduction

As disclosed in its respective P. R. 3-1 Amended Infringement Contentions, Plaintiff asserts the following patents and claims:

[1] The '150 Patent and '041 Patent are asserted against Samsung but not LG. Accordingly, the Invalidity and Subject Matter Eligibility Contentions set forth herein and in the accompanying charts for those patents are Samsung's contentions and not LG's.

Patent	Asserted Claims[2]	ACT's Alleged Priority Date	Chart Prefix
'128 Patent	**1**, 2, 3, **4**	February 9, 2001	A
'025 Patent	**6**, **7**, 8, **10**	April 17, 2006	B
'150 Patent	**1**, **2**, **3**, **4**	October 13, 2006	C
'041 Patent	**1**, 2, 4, **6**	December 28, 2012	D
'303 Patent	**1**	March 31, 2014	E
'995 Patent	**2**, **3**, **4**, 11	May 30, 2008	F

The claims identified above are referenced as "the Asserted Claims" unless reference is made specifically with respect to particularly identified one or more of the Asserted Patents and/or one or more of the Asserted Claims. By identifying ACT's alleged priority date for the Asserted Claims of each patent above, Defendants do not concede that ACT's claims of priority are correct. Further, the citation of prior art herein and the accompanying exhibits are not intended to reflect Defendants' claim construction contentions, which will be disclosed in due course in accordance with the Docket Control Order. Instead, Defendants' Second Amended Invalidity Contentions and Subject Matter Eligibility Contentions as set forth herein and in the accompanying exhibits may reflect Plaintiff's apparent claim constructions based on its Amended Infringement Contentions, with which Defendants disagree.

As further detailed in and supported by these Second Amended Invalidity Contentions, Defendants contend that each of the Asserted Claims is invalid under at least 35 U.S.C. §§ 101, 102, 103, and/or 112.[3] Defendants reserve the right to prove the invalidity of the Asserted Claims on bases other than those required to be disclosed in these disclosures pursuant to P.R. 3-3.

[2] *See* n.1.

[3] References to Title 35 of the United States Code are to statutes prior to amendment under the America Invents Act ("AIA"), to the extent that the Asserted Patents have effective filing dates prior to applicable AIA effective dates, and to the current statutory provisions with respect to Asserted Patents having effective filing dates after the applicable AIA effective dates.

II. Amendment / Supplementation

Defendants' Invalidity Contentions and Subject Matter Eligibility Contentions pertain to the Asserted Claims as identified in Plaintiff's Amended Infringement Contentions. To the extent the Court later allows Plaintiff to amend its infringement contentions and/or assert one or more claims other than the Asserted Claims, Defendants reserve the right to modify, amend, or supplement these Invalidity Contentions and Subject Matter Eligibility Contentions accordingly—for example, to show the invalidity and/or ineligibility of any such newly Asserted Claims.

These Invalidity Contentions and Subject Matter Eligibility Contentions are based on Defendants' current understanding of the Asserted Claims and Plaintiff's apparent view of the scope of those claims as shown, for example, in Plaintiff's Amended Infringement Contentions. A *Markman* Order in this case has not yet been issued, and in no way should these Invalidity Contentions and Subject Matter Eligibility Contentions be taken as any admission or acquiescence by Defendants as to the proper scope of the Asserted Claims and/or proper claim constructions of terms and phrases recited in those claims. By identifying prior art that anticipates and/or renders obvious the Asserted Claims, Defendants do not admit that the claim limitations are capable of construction, do not admit that any claim limitations are supported with an appropriate written description and enabling disclosure in the applicable patent specifications, and do not adopt Plaintiff's apparent claim constructions or admit the accuracy of any particular claim construction.[4] Defendants reserve all rights to later challenge or oppose any claim constructions

[4] Defendants do not concede that Plaintiff's apparent interpretation of the claims is correct, but rather assert the well-established principle that whatever infringes a claim if later in time anticipates if earlier in time. *Bristol-Myers Squibb Co. v. Ben Venue Labs., Inc.*, 246 F.3d 1368, 1378 (Fed. Cir. 2001). Thus, where Plaintiff for purposes of its infringement case alleges that a feature of an accused product meets a particular limitation recited in one or more of the Asserted Claims, then that feature, should it be found in the prior art, would also cause that limitation to be met for invalidity purposes.

advanced by Plaintiff and to present their own claim construction positions as permitted by the Court.

Defendants further reserve the right to revise these Invalidity Contentions and Subject Matter Eligibility Contentions in view of the Court's construction of terms and phrases recited in one or more of the Asserted Claims, additional information obtained during discovery, additional infringement theories put forth by Plaintiff during fact and/or expert discovery, any findings as to the priority date(s) of the Asserted Claims, and/or positions that Plaintiff, its fact witnesses, or its expert witness(es) may take concerning claim construction, infringement, and/or invalidity issues, as permitted by the Court. Defendants further reserve the right to supplement their accompanying P.R. 3-4(b) document productions should they later discover additional prior art documents, information, testimony, prior art systems and related documentation, and/or software or hardware code, including information provided by third parties after the date of service of these Invalidity Contention and Subject Matter Eligibility Contentions.

Additionally, Plaintiff has not identified its contentions regarding the level of ordinary skill in the art for any of the Asserted Patents. Thus, Defendants have based their Invalidity and Subject Matter Eligibility Contentions on the level of skill in the art apparent from the face of the Asserted Patents. For the avoidance of doubt, Defendants contend that the asserted claims are invalid for the reasons set forth in their Invalidity and Subject Matter Eligibility contentions under any plausible definition of the level of ordinary skill for each of the Asserted Patents. Nevertheless, Defendants reserve the right to revise these Invalidity Contentions and Subject Matter Eligibility Contentions in response to any position taken by Plaintiff on the level of ordinary skill in the art applicable to a given Asserted Patent.

Defendants may further rely on inventor admissions concerning the scope or state of the

prior art relevant to the Asserted Claims, the patent prosecution histories of the Asserted Patents, related patents and/or patent applications, any deposition or trial testimony of the named inventors on the Asserted Patents, and the papers filed and any evidence produced or submitted by Plaintiff in connection with these cases or other related litigation. Defendants reserve the right to contend that one or more of the Asserted Claims are invalid under 35 U.S.C. § 102(f) in the event Defendants obtain evidence that one or more of the named inventors did not invent the subject matter in the Asserted Claims.

Prior art not included in these Invalidity Contentions and Subject Matter Eligibility Contentions, whether known or not known to Defendants, may become relevant. In particular, Defendants are currently unaware of the extent, if any, to which Plaintiff will contend that limitations of the Asserted Claims are not disclosed in the prior art identified in these Invalidity Contentions and Subject Matter Eligibility Contentions. Accordingly, Defendants reserve the right to identify other references that would disclose the allegedly missing limitation(s) of the claimed method, device, or system.

The references identified in these Invalidity Contentions and Subject Matter Eligibility Contentions, which include the attached claim charts, may disclose the elements of the Asserted Claims explicitly and/or inherently, render those elements alone or in combination obvious to those of ordinary skill in the art even absent an explicit or inherent disclosure, and/or they may be relied upon to show the state of the art in the relevant time frame. References identified in these Invalidity Contentions and Subject Matter Eligibility Contentions, as well as the "References Cited" on the face of the Asserted Patents and the patents cited within the body of the Asserted Patents, may be used to illustrate, but not limit the scope of, the state of the art to which the Asserted Patents pertain (i.e., at a time prior to the date of alleged inventions of the Asserted Claims

of the Asserted Patents). Moreover, Defendants reserve the ability to rely on later-identified sources of information, including but not limited to witness testimony and other discovery, to establish the state of the art in the relevant time frame pertaining to the Asserted Patents.

Because discovery has just recently begun, Defendants anticipate that additional prior art and invalidity bases may be found. Defendants' investigation and analysis of the prior art is continuing, and thus Defendants reserve the right to supplement, amend, and/or revise the information provided herein as Defendants conduct further investigation and/or analysis, including identifying, charting, and relying on additional references.

Additionally, in view of likely third-party discovery that will be taken, Defendants reserve the right to present additional items of prior art under 35 U.S.C. §§ 102(a), (b), (e), and/or (g) and/or § 103 located during discovery or further investigation, and to assert contentions of invalidity under 35 U.S.C. §§ 102(c), (d), or (f). For example, Defendants expect to issue subpoenas to third parties believed to have knowledge, documents, and/or other evidence concerning invalidity of one or more of the Asserted Claims.

In addition to the positions and prior art identified in these Invalidity Contentions and Subject Matter Eligibility Contentions (including the accompanying claim charts), Defendants also incorporate by reference all invalidity contentions and subject matter eligibility contentions, prior art,[5] and invalidity claim charts (including, without limitation, all anticipation positions, obviousness positions [including all prior art combinations and motivations to combine], indefiniteness positions, written description positions, and non-enablement positions) concerning one or more of the Asserted Patents, as disclosed at any time. This includes without limitation

[5] Prior art appearing in the file histories of the Asserted Patents is not required to be separately produced by Defendants under P. R. 3-4(b).

disclosures in previous or related litigation, in United States Patent & Trademark Office ("USPTO") proceedings, by the Plaintiff, by any other parties accused of patent infringement by the Plaintiff, or by the named inventors or any individuals associated with the prosecution and/or any form of post-grant review or reexamination of the Asserted Patents.

Specifically, for example, Defendants identify, as prior art upon which they may rely to show the invalidity of the Asserted Claims, the prior art references disclosed by parties in any other litigation (including *inter partes* review and/or reexamination proceedings) involving one or more of the Asserted Patents, any patent related to any of the Asserted Patents, and/or any other patent allegedly assigned to Plaintiff claiming priority to the Asserted Patents (collectively, "Other ACT Proceedings"). For example, Defendants expressly identify and intend to rely on the prior art and invalidity arguments raised in IPR2024-00062, IPR2024-00374, IPR2024-00327, IPR2024-00372 (collectively, "Samsung IPRs").[6] To the extent any Defendant has stipulated or stipulates in the future that it will not pursue certain invalidity grounds in these actions concerning patent claims subject to instituted *inter partes* review proceedings, the relevant Defendant(s) will abide by those stipulation(s), and nothing in these contentions should be read as suggesting otherwise. Rather, these contentions are intended to put Plaintiff on notice of the grounds of invalidity, within the scope of P.R. 3-3, that one or more Defendants may assert in these actions, including because the conditions of any relevant stipulation are not met (*e.g.*, if the corresponding *inter partes* review is not instituted) or because the grounds fall outside the scope of such stipulation(s).

Defendants note that the law regarding whether "Admitted Prior Art" may be used in an *inter partes* review is subject to at least one case currently pending before the Federal Circuit. *See*

[6] Defendants have produced the current IPR record for the Samsung IPRs and reserve the right to refer to additional documents as they are filed in each IPR proceeding.

Br. of Appellant Qualcomm Incorporated at 13, *Qualcomm Inc. v. Apple Inc.*, No. 23-1208 (Fed. Cir. March 20, 2023) ("Did the Board err in interpreting Section 311(b) to permit Apple's Ground 2, which consists of so-called applicant admitted prior art (AAPA) in view one or more prior art patents or printed publications?"). Further developments regarding the law may impact the scope and effect of any relevant stipulations.

Plaintiff has a present and ongoing duty to produce to Defendants all relevant documents from any Other ACT Proceedings, including but not limited to all prior art, invalidity contentions, and expert reports on invalidity (among other relevant items).

Defendants reserve the right to supplement or otherwise amend these Invalidity Contentions and Subject Matter Eligibility Contentions in response to any relevant discovery provided by third parties, Plaintiff, opening or rebuttal expert reports, fact or expert depositions, or in response to any claim construction ruling(s) issued by this Court (regardless of how and when such ruling is made). Defendants also reserve the right to supplement or otherwise amend these Invalidity Contentions and Subject Matter Eligibility Contentions in response to any rebuttal evidence disclosed by Plaintiff or as otherwise may be necessary or appropriate under the circumstances.

III. P. R. 3-3(a) – Identification of Prior Art

Pursuant to P.R. 3-3(a), and subject to Defendants' reservations of rights, Defendants identify each item of prior art that anticipates or renders obvious the Asserted Claims below.[7]

[7] Defendants' disclosure of prior art is premised on the alleged priority dates of the Asserted Patents as identified in Plaintiff's Infringement Contentions. Defendants contend Plaintiff is not entitled to the alleged priority dates and reserve the right to modify, amend, or supplement their invalidity contentions with additional prior art references if any Asserted Claim is shown to not be entitled to the respective alleged priority date or if Plaintiff alleges any other priority date for any of the Asserted Claims. Notwithstanding that reservation of rights, Defendants also reserve

A. U.S. Patent No. 6,845,128

Invalidity claim charts identifying disclosures in the references identified in the tables below as to the Asserted Claims of the ’128 Patent are provided in attached Exhibits A1 through A21.

Table 1-A: Prior Art Patents and Printed Publications for the ’128 Patent

Patent No. or Title (Primary Inventor/Author)	Date of Issue/ Publication	Filing Date
US 4,658,296A (“Beech”)	4/14/1987	3/5/1984
US 5,157,760A (“Akagirl”)	10/20/1992	4/16/1991
US 5,166,810A (“Sorimachi”)	11/24/1992	8/30/1990
US 5,748,243A (“Suzuki”)	5/5/1998	11/7/1994
US 5,771,333 (“Hirayama”)	6/23/1998	8/29/1996
US 5,960,123A (“Ito”)	9/28/1999	7/24/1996
US 6,014,468A (“McCarthy”)	1/11/2000	7/30/1998
US 4,768,104A (“Kanamaru”)	8/30/1988	2/12/1986
US 5,124,812 (“Sato”)	6/23/1992	1/3/1990
US 5,136,376A (“Yagasaki”)	8/4/1992	10/12/1990
US 5,214,507 (“Aravind”)	5/25/1993	11/8/1991
US 5,241,387 (“Fujikawa”)	8/31/1993	11/27/1991
US 5,398,078 (“Masuda”)	3/14/1995	10/30/1992
US 5,396,567 (“Jass”)	3/7/1995	11/4/1991
US 5,491,514A (“Fukuda”)	2/13/1996	1/27/1994
US 5,523,861A (“Tanaka”)	6/4/1996	5/13/1992
US 5,619,256A (“Haskell”)	4/8/1997	5/26/1995
US 5,686,962 (“Chung”)	11/11/1997	12/30/1994
US 5,719,986 (“Kato”)	2/17/1998	5/1/1996
US 5,771,333A (“Hirayama”)	6/23/1998	8/29/1996
US 5,838,463A (“Gahang”)	11/17/1998	8/14/1995
US 5,907,642A (“Ito”)	5/25/1999	7/24/1996
US 5,990,957 (“Ryoo”)	11/23/199	11/4/1997
US 6,026,232A (“Yogeshwar”)	2/15/2000	7/13/1995
US 6,111,991 (“Ribas-Corbera”)	8/29/2000	1/16/1998
US 6,144,763A (“Ito”)	11/7/2000	3/18/1998
US 6,148,107 (“Ducloux”)	11/14/2000	8/18/1997
US 6,192,075 (“Jeng”)	2/20/2001	8/21/1997

the right to argue that they have been unduly prejudiced should Plaintiff allege a different priority date for any of the Asserted Claims, and that accordingly Plaintiff should not be allowed to do so.

Patent No. or Title (Primary Inventor/Author)	Date of Issue/ Publication	Filing Date
US 6,256,423 (“Krishnamurthy”)	7/3/2001	12/15/1998
US 6,438,167 (“Shimizu”)	8/20/2002	11/12/1998
US 6,463,100 (“Cho”)	10/8/2002	12/29/1998
US 6,490,319 (“Yang”)	12/3/2002	6/22/1999
US 6,539,124 (“Sethuraman”)	3/25/2003	8/17/1999
US 6,801,665B1 (“Atsumi”)	10/5/2004	9/15/1998
US 6,931,060B1 (“Jiang”)	8/16/2005	3/30/2000
CN 1119810A (“Ma”)	4/3/1996	1/14/1995
EP 1005233 (“Bagni”)	5/31/2000	10/12/1988
EP 1062623 A1 (“Farvardin”)	4/13/2001	9/15/1998
JP 1993-007310 A (“Ohno”)	1/14/1993	7/19/1991
JP 1997-081104 A (“Nagao”)	3/28/1997	9/8/1995
JP 1999-225276 A (“Ito”)	8/17/1999	2/6/1998
JP 2000-217088A (“Miyabayashi”)	8/4/2000	3/8/1999
JP 2000149013A (“Aoyama”)	5/30/2000	11/10/1998
JPH 06334899A (“Mochida”)	12/2/1994	5/26/1993
JPH 07177503A (“Shimura”)	7/14/1995	12/20/1993
JPH 08331555A (“Mizutani”)	12/13/1996	5/31/1995
JPH 09172636A (“Kono”)	6/30/1997	12/19/1995
JPH 0981104A (“Nagao”)	3/28/1997	9/8/1995
JPH 07162862A (“Fukuda 2”)	6/23/1995	1/14/1994
US 5,886,736 (“Chen”)	3/23/1999	10/24/1996
KR 10-0269389 B1 (“Bae”)	10/16/2000	5/15/1998
WO 1999038333A1 (“Hui”)	7/29/1999	1/26/1998
WO 2000065843A1 (“Ruellou”)	11/2/2000	4/21/2000
Strom et al., Medical image compression with lossless regions of interest, Signal Processing 59, 155-171 (1997) (“Strom”)	1997	N/A
Menser, Bernd, Face detection and tracking for video coding applications, Conference Record of the Thirty-Fourth Asilomar Conference on Signals, Systems and Computers (Cat. No. 00CH37154). Vol. 1. IEEE (Oct. 2000) (“Menser”)	2000	N/A
Lee, Jae-Beom, et al., Spatio-Temporal Model-Assisted Compatible Coding for Low and Very Low Bitrate Videotelephony, Proceedings 3rd Intn’l Conf. on Image Processing (ICIP096) Lausanne, Switzerland (Sept. 1996) (“Lee”)	1996	N/A
Daly, Face-Based Visually-Optimized Image Sequence Coding, Sharp Laboratories, 443-447, 1998 (“Daly”)	1998	N/A
Chai et al., ForegroundBackground Video Coding Scheme, 1997 IEEE International Symposium on	1997	N/A

Patent No. or Title (Primary Inventor/Author)	Date of Issue/ Publication	Filing Date
Circuits and Systems, June 9-12, 1997, Hong Kong (“Chai”)		
Cheng, The Impact of Rate Control Algorithms on System-Level VLSI Design, Journal of VLSI signal processing for signal, image and video technology, Dec. 1998 (“Cheng”)	1998	N/A
Golner, Region Based Variable Quantization for JPEG Image Compression, Proc 43rd IEEE Midwest Symp on Circuits and Systems. Lansing MI, Aug 8-11, 2000 (“Golner”)	2000	N/A
Rodriguez, MPEG-2 Fundamentals for Broadcast and Post-Production Engineers, July 1996 (“Rodriguez”)	1996	N/A
Tolba, Pure Java-Based Streaming MPEG Player, Proceedings of the SPIE, Volume 3528, p. 216-224 (1999) (“Tolba”)	1999	N/A
Davis, An Overview Of Video Compression Algorithms, EE Times, Feb. 3, 1998 (“Davis”)	1998	N/A
Sullivan, Rate-Distortion Optimization For Video Compression, IEEE Signal Processing Magazine, Nov. 1998 (“Sullivan”)	1998	N/A
Evans ed., Satellite Communication Systems 3rd Edition, Chapter 9 Modulation and Modems (1999) (“Evans 1999”)	1999	N/A
Line Transmission of Non-Telephone Signals, ITU-T Recommendation H.261, Mar. 1993 (“H.261 March. 1993”)	1993	N/A
TMS320C80 DSP (H.261 on DSP)	1997	N/A
ISO-IEC AVC-491. TM5: MPEG-2 Test Model 5 [S]. 1993 (“TM5”)	1993	N/A
Rijkse, ITU-T Draft Recommendation H.263, “Video coding for low bitrate communication,” published February 1998 (“H.263 1998”)	1998	N/A
ITU-R Recommendation F.405-1 (1970) (“405-1”)	1970	N/A
B.J. Stevens and E.J. Middleton, “The Relative Merits of Frequency Modulation and Amplitude Modulation as Applied to a Broadcasting Service,” Transactions of the S.A. Institute of Electrical Engineers (May 1947) (“Stevens”)	1947	N/A
William L. Hatton, Pre-Emphasizing Video Signals (MIT Press, 1951) (“Hatton”)	1951	N/A
TV Technical Operations, Analogue recording (2000) (“TV Tech”)	2000	N/A

Patent No. or Title (Primary Inventor/Author)	Date of Issue/ Publication	Filing Date
Inglis and Luther, Satellite Technology, An Introduction, Second Edition (1997) ("Inglis")	1997	N/A
McMahon, "FM Transmission of Video Signals," International Foundation for Telemetering (1992)	1992	N/A
Mendenhall, National Association of Broadcaster's Engineering Handbook ("Mendenhall")		N/A
Otsuki, et al., "On Compact Disc Tape Masters" (1982)	1982	N/A
Chai, Douglas, et al., *Automatic Face Location for Videophone Images*, IEEE TENCON - Digital Signal Processing Applications (1996) ("Chai 1996")	1996	N/A
Whitaker, Power Vacuum Tubes Handbook, Chapter 2 Modulation Systems and Characteristics (1999)	1999	N/A

Table 2-A: Prior Art Systems and Inventions for the '128 Patent

Name of System or Invention[8]	Date of Sale / Offer for Sale / Public Use / Known by Others
Texas Instruments' TMS320C80 DSP ("TMS320C80")	1997
VideoLAN Client ("VLC")	1996
MPlayer ("MPlayer")	2000
FFmpeg ("FFmpeg")	2000
Lightworks ("Lightworks")	1989
Sorenson Squeeze ("Sorenson")	2001
VideoLAN Client (VLC)	2001
Sony Playstation	1994
Sony Playstation 2	2000
Microsoft Xbox	2001
MPEG-2 SAVI Decoder, Hyundai Electronics	1995
Systems Implementing H.261	
Systems Implementing H.262	
Systems Implementing H.263	

For each of the prior art devices identified above, Defendants have listed and produced

[8] "System" includes any relevant combination of hardware and/or software including, without limitation, computers, portable media players, mobile phones and tablets, digital cameras and camcorders, DVD / HD-DVD / Blu-Ray players, gaming consoles, set-top boxes, streaming devices, etc.

documents as evidence of the relevant features and functionality to the extent that they are presently available and have been located. Defendants have obtained or are in the process of attempting to obtain the identified devices and have made or will make them available for inspection to the extent they are obtained. To the extent that one or more documents (*e.g.*, user manual) may be used to describe aspects of a particular device, that device is a single reference for prior art purposes under 35 U.S.C. § 102. Some or all of the corroborating references may also separately qualify as prior art publications under 35 U.S.C. § 102 and may be used as invalidating references under 35 U.S.C. §§ 102 and/or 103.

Further, Defendants are actively searching for information regarding at least the systems, devices, and/or inventions listed above in Table 2-A.

Discovery is ongoing, and Defendants may serve third parties with document subpoenas. For example, Defendants have served subpoenas on Texas Instruments Incorporated and Kodi Foundation, and reserve the right to rely on documents produced by them. One or more of these devices, along with related documentation, may be invalidating, and Defendants reserve the right to supplement these contentions accordingly. Defendants continue to investigate each of the identified devices, including through potential discovery needed to be obtained via third party subpoenas, and reserve the right to supplement these contentions and accompanying claim charts after further investigation.

Defendants' reference to a particular product, device, or software program in these contentions should be interpreted as a reference to the system itself as well as to any corresponding patents, publications, or product literature relating to the cited system. Upon information and belief, the systems were publicly disclosed, used, sold, or offered for sale in the United States before the alleged priority date of the Asserted Claims of the '128 Patent. Defendants'

investigation of such prior art systems is still ongoing and discovery has not yet been received from third parties who may have information concerning such prior art systems. Accordingly, subsequent discovery may reveal information that affects the disclosures and contentions herein. For example, subsequent discovery may provide additional information regarding whether or not any of the third-party prior art systems anticipate or render obvious the Asserted Claims of the '128 Patent. As such, Defendants reserve all rights to supplement their invalidity contentions.

Many of the inventive, research, design, and development activities concerning these systems and technologies occurred in the United States before the alleged priority date of the Asserted Claims of the '128 Patent. Defendants have obtained, and are in the process of obtaining, additional information regarding the dates by which the cited products and services were publicly disclosed, used, sold, or offered for sale, the circumstances under which the research, design, and development activities were conducted, and the identities of the particular individuals involved in such activities through publicly available patents, publications, and product literature. The actual dates, circumstances, and identities of individuals will be the subject of third party discovery during this lawsuit, which Defendants reserve the right to rely upon to corroborate the prior art status of the prior art identified herein. Defendants reserve the right to modify, amend, or supplement these contentions if additional information becomes available during the course of this lawsuit. Furthermore, Defendants will make all such devices, software programs, or other products in Defendants' possession, custody, or control available for inspection by Plaintiff.

Consequently, Defendants reserve the right to amend, modify, or supplement these Invalidity Contentions should additional information become available to them through discovery.

In addition, Defendants identify, responsive to Plaintiff's Amended Infringement Contentions, the patents, publications, and/or systems listed in Tables 1-A and 2-A as evidence of

the state of the art as it relates to video coding.

Each of these references show that the concept of "emphasis processing" is not novel and was well-known for many years before the alleged priority date of the '128 Patent, as discussed in more detail in Section IV.B (obviousness). In light of the references discussed herein, the Asserted Claims of the '128 Patent cannot be valid.

Each prior art patent, publication, or product identified above was either effectively filed or issued (for patents), published (for publications) or known, used, offered for sale or sold (for products) before either the earliest claimed priority date of the '128 Patent to which it is applied for invalidity, and none appears to have been abandoned, suppressed, or concealed, so each such reference also constitutes evidence of prior invention pursuant to 35 U.S.C. § 102(g), if it is in the U.S. The persons or entities involved with each such invention include the named inventors on the above-identified patents, the authors listed on the above-identified publications, and the entities and individuals identified in connection with the above-identified products.

Because Defendants have not yet completed discovery in this case, including taking depositions of the named inventors, and otherwise obtaining discovery from Plaintiff and third parties, Defendants reserve the right to supplement these contentions with facts, documents, or other information learned at a later point through discovery or further investigation.

B. U.S. Patent No. 8,090,025

Invalidity claim charts identifying disclosures in the references identified in the tables below as to the Asserted Claims of the '025 Patent are provided in attached Exhibits B1 through B28.

Table 1-B: Prior Art Patents and Printed Publications for the '025 Patent

Patent No. or Title (Primary Inventor/Author)	Date of Issue/ Publication	Filing Date
US 5,790,207 (“Jung 207”)	8/4/1998	3/14/1996
US 5,878,169A (“Miyamoto”)	3/2/1999	2/25/1998
US 5,912,815A (“Kim”)	6/15/1999	3/14/1997
US 6,081,551A (“Etoh”)	6/27/2000	10/23/1996
US 6,144,700A (“Kim”)	11/7/2000	5/14/1997
US 6,415,055B1 (“Kato”)	7/2/2002	12/12/1995
US 6,553,149B1 (“Chun”)	4/22/2003	10/16/1998
US 6,625,316 (“Maeda”)	9/23/2003	6/1/1999
US 6,646,578B1 (“Au”)	11/11/2003	11/22/2003
US 6,760,480B2 (“Hata”)	7/6/2004	11/13/2002
US 6,954,156B2 (“Kadono”)	10/11/2005	3/13/2003
JP 2001128183A (“Sagada”)	5/11/2001	11/1/1999
JPH 07274180A (“Tomonaga”)	10/20/1995	3/31/1994
JPH 08265768A (“Jung”)	10/11/1996	3/15/1996
JPH 10243401A (“Yokoyama”)	9/11/1998	1/17/1996
US 20010017944A1 (“Kalevo”)	8/30/2001	1/19/2001
US 20020067432A1 (“Kondo”)	6/6/2002	10/22/2001
US 20040184666 (“Sekiguchi”)	9/23/2004	6/28/2002
US 20040252896 (“Lee 896”)	12/16/2004	4/14/2004
US 20040008784A1 (“Kikuchi”)	1/15/2004	6/13/2003
US 20040141615A1 (“Chujoh”)	7/22/2004	1/12/2004
US 20050169374A1 (“Marpe”)	8/4/2005	1/30/2004
US 20050201462A1 (“Ridge”)	9/15/2005	3/9/2004
US 20050201633A1 (“Moon”)	9/15/2005	3/11/2005
US 20050254722A1 (“Fattal”)	11/17/2005	1/15/2003
US 20060013310A1 (“Lee 310”)	1/19/2006	7/15/2005
US 20060268982A1 (“Lee 982”)	11/30/2006	11/29/2005
US 20070030894A1 (“Tian”)	2/8/2007	8/3/2005
US 20030138049 (“Ahn”)	7/24/2003	11/14/2002
WO 2000051357A1 (“Lee”)	8/31/2000	2/25/2000
WO 2004100556A2 (“Davies”)	11/18/2004	5/7/2004
WO 2005107267A1 (“Murakami”)	11/10/2005	4/28/2004
US 20050078755A1 (“Woods”)	4/14/2005	10/14/2004
US 5,414,804A (“McWaid”)	5/9/1995	7/28/1992
US 7,596,279B2 (“Sugimoto”)	9/29/2009	4/25/2003
US 6,144,700A (“Kim”)	11/7/2000	5/14/1997
US 6,333,949 (“Nakagawa”)	12/25/2001	12/29/1999
KR 20040074725A (“Lee 725”)	8/26/2004	2/18/2003
U.S. Patent No. 8,059,903 (“Yamatani-903”)	05/26/2006	11/17/2005
U.S. Provisional Patent App. No. 60/629,094 (“Yamatani-Prov”)	05/26/2006	11/17/2004
ITU-T Rec. H.263 (01/2005) (“AVC 2005”)	1/2005	N/A

Patent No. or Title (Primary Inventor/Author)	Date of Issue/ Publication	Filing Date
ISO/IEC, Info. Tech. – Coding of audio-visual objects, Part 2: Visual (2001) ("MPEG-4 1999")	12/1/2001	N/A
ITU-T Rec. H.264 (05/2003) ("AVC 2003")	2003	N/A
Motion Vector Estimation using Edge Oriented Block Matching Algorithm for Video Sequences ("Ahmad")	2000	N/A
Improvement of DCT-based Compression Algorithms Using Poisson's Equation ("Yamatani")	2005 and 2006	N/A
Polyharmonic Local Cosine Transform for Improving the Reproduction Quality of JPEG-Compressed Images ("Yamatani 2")	2006	N/A
The Polyharmonic Local Sine Transform: A New Tool For Local Image Analysis and Synthesis Without Edge Effect ("Saito")	2005	N/A
C. Reader, "History of MPEG Video Compression", June 17, 2019 ("Reader")	2019	N/A
E.G. Richardson, H.264 and MPEG-4 Video Compression, 2003 ("Richardson")	2003	N/A
Satoshi Nogaki and Mutsumi Ohta, An Overlapped Block Motion Compensation for High Quality Motion Picture Coding ("Nogaki")	1992	N/A
Averbuch et al., A Fast Poisson Solver of Arbitrary Order Accuracy in Rectangular Regions ("Averbuch")	1998	N/A
Braverman et al., A Fast 3D Poisson Solver of Arbitrary Order Accuracy ("Braverman")	1998	N/A
Haskell et al., Digital Video: An Introduction to MPEG 2, Chapter 9 ("Haskell")	2002	N/A
Text of Committee Draft of Joint Video Specification (ITU-T Rec. H.264 ISO/IEC 14496-10 AVC) ("Wiegand")	2002	N/A
Michael Orchard and Gary Sullivan, Overlapped Block Motion Compensation: An Estimation-Theoretic Approach ("Orchard")	1994	N/A
Jucheng Zhao, Naoki Saito, and Katsu Yamatani, PHLFT5: A Practical and Improved Version of Polyharmonic Local Fourier Transform ("Zhao-Saito-Yamatani")	2005	N/A
Pererira and Ebrahimi, The MPEG-4 Book, Chapter 8 ("The MPEG-4 Book")	2002	N/A
Rob Koenen, MPEG-4 Overview WG11 (MPEG), V.21	2002	N/A
Watanabe and Singhal, Windowed Motion Compensation	1991	N/A

Patent No. or Title (Primary Inventor/Author)	Date of Issue/ Publication	Filing Date
John Watkinson, The MPEG Handbook MPEG-1 MPEG-2 MPEG-4	2001	N/A
Prosecution History of U.S. Patent App. No. 11/667,848 ("Yamatani-FH")	5/26/2006	N/A
Video coding for mobile communications: efficiency, complexity and resilience ("Mualla")	2002	N/A
A concealment method for video communications in an error-prone environment ("Shirani")	6/2000	N/A
T. Stockhammer, et al., "H.264/AVC in Wireless Environments," in IEEE Trans. on Circuits and Systems for Video Tech., vol. 13, no. 7 ("Stockhammer")	7/2003	N/A

Table 2-B: Prior Art Systems and Inventions for the '025 Patent

Name of System or Invention[9]	Date of Sale / Offer for Sale / Public Use / Known by Others
RealPlayer	1997
FFmpeg	2000
Adobe Flash Player	2002
Apple iPhone	2007
Apple TV	2007
HTC Touch Cruise Phone	2008
HTC Touch Dual Phone	2007
Adobe Flash Player 9	2007
Qualcomm MSM7200 Chipset Solution	2007
Horizon Semiconductor Hz7220 System-On-a-Chip Solution	2007
Xbox Media Center (XBMC) / Kodi	2002
VideoLAN Client (VLC)	2001
Sony Playstation	1994
Sony Playstation 2	2000
Sony Playstation Portable (PSP)	2004
Microsoft Xbox	2001
Microsoft Xbox 360	2005
Roku PhotoBridge HD1000 Product ("Roku Product")	2003
Roku PhotoBridge HD1000 System ("Roku System")	2003

[9] "System" includes any relevant combination of hardware and/or software including, without limitation, computers, portable media players, mobile phones and tablets, digital cameras and camcorders, DVD / HD-DVD / Blu-Ray players, gaming consoles, set-top boxes, streaming devices, etc.

Name of System or Invention[9]	Date of Sale / Offer for Sale / Public Use / Known by Others
MPEG-2 SAVI Decoder, Hyundai Electronics	1995
VidyoRoom	2008
VidyoPortal	2008
VidyoDesktop	2008
Cisco Webex Platform ("Webex")	2007
Polycom HDX4000 ("Polycom HDX4000")	2007
RADVISION Interactive Video Platform	2006
Click to Meet™	2006
SCOPIA™	2006
NVIDIE GeForce 8600	2007
Radeon X1000-series	2005
ATI Technologies Unified Video Decoder	2008
STI7200	2007
Apple Mac OS X v10.4	2005
QuickTime 7	2005
Microsoft Windows Vista	2006
Broadcom BCM7411	2004
Conexant CX2418X	2004
Systems Implementing MPEG-2	
Systems Implementing MPEG-4	
Systems Implementing H.262	
Systems Implementing H.263	
Systems Implementing H.264	
Systems Implementing VC1	
Systems Implementing DivX	
Systems Implementing Xvid	

For each of the prior art devices identified above, Defendants have listed and produced documents as evidence of the relevant features and functionality to the extent that they are presently available and have been located. Defendants have obtained or are in the process of attempting to obtain the identified devices and have made or will make them available for inspection to the extent they are obtained. To the extent that one or more documents (*e.g.*, user manual) may be used to describe aspects of a particular device, that device is a single reference for prior art purposes under 35 U.S.C. § 102. Some or all of the corroborating references may also separately qualify as prior art publications under 35 U.S.C. § 102 and may be used as

invalidating references under 35 U.S.C. §§ 102 and/or 103.

Further, Defendants are actively searching for information regarding at least the systems, devices, and/or inventions listed above in Table 2-B.

Discovery is ongoing, and Defendants may serve third parties with document subpoenas. For example, Defendants have served subpoenas on OpenShot Studios, LLC, NCH Software, Inc., Magix Computer Products International Co., Kodi Foundation, Roku, Inc., and Qualcomm Incorporated. One or more of these devices, along with related documentation, may be invalidating, and Defendants reserve the right to supplement these contentions accordingly. Defendants continue to investigate each of the identified devices, including through potential discovery needed to be obtained via third party subpoenas, and reserve the right to supplement these contentions and accompanying claim charts after further investigation.

Defendants' reference to a particular product, device, or software program in these contentions should be interpreted as a reference to the system itself as well as to any corresponding patents, publications, or product literature relating to the cited system. Upon information and belief, the systems were publicly disclosed, used, sold, or offered for sale in the United States before the alleged priority date of the Asserted Claims of the '025 Patent. Defendants' investigation of such prior art systems is still ongoing and discovery has not yet been received from third parties who may have information concerning such prior art systems. Accordingly, subsequent discovery may reveal information that affects the disclosures and contentions herein. For example, subsequent discovery may provide additional information regarding whether or not any of the third-party prior art systems anticipate or render obvious the Asserted Claims of the '025 Patent. As such, Defendants reserve all rights to supplement their invalidity contentions.

Many of the inventive, research, design, and development activities concerning these

systems and technologies occurred in the United States before the alleged priority date of the Asserted Claims of the ’025 Patent. Defendants have obtained, and are in the process of obtaining, additional information regarding the dates by which the cited products and services were publicly disclosed, used, sold, or offered for sale, the circumstances under which the research, design, and development activities were conducted, and the identities of the particular individuals involved in such activities through publicly available patents, publications, and product literature. The actual dates, circumstances, and identities of individuals will be the subject of third party discovery during this lawsuit, which Defendants reserve the right to rely upon to corroborate the prior art status of the prior art identified herein. Defendants reserve the right to modify, amend, or supplement these contentions if additional information becomes available during the course of this lawsuit. Furthermore, Defendants will make all such devices, software programs, or other products in Defendants’ possession, custody, or control available for inspection by Plaintiff.

Consequently, Defendants reserve the right to amend, modify, or supplement these Invalidity Contentions should additional information become available to them through discovery.

In addition, Defendants identify, responsive to Plaintiff’s Amended Infringement Contentions, the patents, publications, and/or systems listed in Tables 1-B and 2-B as evidence of the state of the art as it relates to video coding.

Each of these references show that the concept of using a “boundary condition” in video coding is not novel and was well-known for many years before the alleged priority date of the ’025 Patent. In light of the references discussed herein, the Asserted Claims of the ’025 Patent cannot be valid.

Each prior art patent, publication, or product identified above was either effectively filed or issued (for patents), published (for publications) or known, used, offered for sale or sold (for products) before either the earliest claimed priority date of the ’025 Patent to which it is applied

for invalidity, and none appears to have been abandoned, suppressed, or concealed, so each such reference also constitutes evidence of prior invention pursuant to 35 U.S.C. § 102(g), if it is in the U.S. The persons or entities involved with each such invention include the named inventors on the above-identified patents, the authors listed on the above-identified publications, and the entities and individuals identified in connection with the above-identified products.

Because Defendants have not yet completed discovery in this case, including taking depositions of the named inventors, and otherwise obtaining discovery from Plaintiff and third parties, Defendants reserve the right to supplement these contentions with facts, documents, or other information learned at a later point through discovery or further investigation.

C. U.S. Patent No. 8,139,150

Invalidity claim charts identifying disclosures in the references identified in the tables below as to the Asserted Claims of the ’150 Patent are provided in attached Exhibits C1 through C17.

Table 1-C: Prior Art Patents and Printed Publications for the ’150 Patent

Patent No. or Title (Primary Inventor/Author)	Date of Issue/ Publication	Filing Date
JP 2000286712A (“Tsuda”)	10/13/2000	3/30/1999
JP 2000354258A (“Taniguchi”)	12/19/2000	12/24/1999
JP 2004266497A (“Hito”)	9/24/2004	2/28/2003
JPH 10243419A (“Tomizawa”)	9/11/1998	2/26/1997
US 2003/0138051 (“Chen 051”)	11/15/2016	1/22/2003
US 2003/179825 (“Sekiguchi”)	9/25/2003	4/8/2002
US 2004/0066847A1 (“Adachi”)	4/8/2004	9/29/2003
US 2006/0062300A1 (“Park App.”)	3/23/2006	9/22/2005
US 2007/0064800 (“Ha”)	3/22/2007	9/22/2006
US 2009/0185616 (“Pandit App.”)	7/23/2009	2/27/2007
US 2010/0111108 (“Akgul”)	11/9/2010	11/3/2008
US 2011/0075997 (“Begen”)	5/20/2014	9/30/2009
US 5,504,530 (“Obikane")	4/2/1996	6/25/1993
US 5,590,139 (“Suzuki 139”)	12/31/1996	5/30/1995
US 5,619,256 (“Haskell”)	4/8/1997	5/26/1995
US 5,633,682A (“Tahara”)	5/27/1997	10/21/1994

Patent No. or Title (Primary Inventor/Author)	Date of Issue/ Publication	Filing Date
US 5,652,616A (“Chen 616”)	7/29/1997	8/6/1996
US 5,682,437A (“Okino”)	10/28/1997	2/12/1996
US 5,717,415A (“Iue”)	2/10/1998	7/10/1996
US 5,777,666A (“Tanase”)	7/7/1998	4/16/1996
US 5,886,736 (“Chen”)	3/23/1999	10/24/1996
US 6,055,274A (“McVeigh”)	4/25/2000	12/30/1997
US 6,963,606 (“Yanagihara”)	11/8/2005	11/5/1998
US 7,561,783B2 (“Comer”)	7/14/2009	7/15/2003
US 7,671,893B2 (“Li”)	3/2/2010	7/27/2004
US 7,728,877B2 (“Xin”)	6/1/2010	11/30/2005
US 8,040,952B2 (“Park”)	10/18/2011	3/30/2006
US 8,111,758B2 (“Yun”)	2/7/2012	8/26/2003
US 8,259,800 (“Wang”)	9/4/2012	3/27/2006
US 8,811,471B2 (“Suzuki”)	8/19/2014	7/12/2005
US 9,100,659 (“Pandit”)	8/4/2015	2/27/2007
WO 2006062377A1 (“Kim”)	6/15/2006	12/9/2005
WO 2006075844A1 (“Lee”)	7/20/2006	12/13/2005
Smolic, 3D Video and Free Viewpoint Video - Technologies, Applications and MPEG Standards (2006 IEEE Conference Publication) (“Smolic”)	2006	N/A
Merkle, Efficient Compression of Multi-View Video Exploiting Inter-View Dependencies Based on H.264/MPEG4-AVC (2006 IEEE Conference Publication) Information Technology – Generic Coding Of Moving Pictures and Associated Audio Information: Systems (2000 Standard Recommendation) (“Merkle”)	2006	N/A
MPEG-4 Advanced Video Coding (AVC Standard)	2006	N/A
Chen, MPEG-2 Multi-View Profile and its application in 3DTV (1997 Paper) (“Chen-Luthra”)	1997	N/A
“Scalable Video Coding-Working Draft 1"; Joint Video Team (JVT) of ISO/IEC MPEG & ITU-T VCEG (ISO/IEC JTC1/SC29/WG11 and ITU-T SG16 Q.6), 14the Meeting: Hong Kong, CN, Jan. 17-21, 2005 (“Scalable Video Draft 1”)	2005	N/A
H. Benoit, “Digital Telvision: MPEG-1, MPEG-2 and principles of the DVB system,” Second Edition (“Benoit”)	1996	N/A
H. Schwarz, Overview of the Scalable Video Coding Extension of the H.264/AVC Standard, IEEE Transactions on Circuits and Sys. for Video Tech., Vol. 17, No. 9, Sept. 2007 (“Schwarz”)	2007	N/A

Patent No. or Title (Primary Inventor/Author)	Date of Issue/ Publication	Filing Date
Segall, Spatial Scalability Within the H.264/AVC Scalable Video Coding Extension, IEEE Transactions on Circuits and Sys. for Video Tech., Vol. 17, No. 9, Sept. 2007 ("Segall")	2007	N/A
ITU-T Recommendation H.262, Generic Coding of Moving Picturesand associated audio information, Feb. 2000 ("H.262 2000")	2000	
ITU-T Recommendation H.263, Video coding for low bit rate communication, Jan. 2005 ("H.263 2005")	2005	N/A
ITU-T Recommendation H.264, Advanced video coding for generic audiovisual services, Mar. 2005 ("H.264 2005")	2005	N/A
ISO/IEC 13818-1, First Edition, April 4, 1996 ("H.222 1996")	1996	
Belle L. Tseng & Dimitris Anastassiou, Multiviewpoint Video Coding with MPEG-2 Compatibility, IEEE Transactions on Circuits & Systems for Video Technology, Vol. 6, No. 4 (August 1996) ("Tseng")	1996	
Sherman (Xuemin) Chen, An Issue Regarding to the B-Picture Coding, JVT-D125, Joint Video Team (JVT) of ISO/IEC MPEG & ITU-T VCEG, 4th Meeting: Lagenfurt, Austria, July 22-26, 2002 ("JVT-D125")	2002	
Overview of MPEG-2 Systems, Technologies and Services on Digital Broadcasting (5), Broadcast Technology No. 11, Summer 2002 ("NHK")	2002	
Digital Television MPEG-1, MPEG-2 and principles of the DVB system, Second Edition 2002 ("Digital TV")	2002	N/A

Table 2-C: Prior Art Systems and Inventions for the '150 Patent

Name of System or Invention[10]	Date of Sale / Offer for Sale / Public Use / Known by Others
Philips's 3D 4YOU LCD Monitor ("Phillips 3DTV")	2006
3DTV.at Stereoscopic Player ("3DTV.at")	2006

[10] "System" includes any relevant combination of hardware and/or software including, without limitation, computers, portable media players, mobile phones and tablets, digital cameras and camcorders, DVD / HD-DVD / Blu-Ray players, gaming consoles, set-top boxes, streaming devices, etc.

Name of System or Invention[10]	Date of Sale / Offer for Sale / Public Use / Known by Others
Qualcomm MSM7200 Chipset Solution ("MSM 7200")	2007
Roku PhotoBridge HD1000 Product ("Roku Product")	2003
Roku PhotoBridge HD1000 System ("Roku System")	2003
FFmpeg ("FFmpeg")	2004
Xbox Media Center (XBMC) / Kodi	2002
VideoLAN Client (VLC)	2001
Sony Playstation	1994
Sony Playstation 2	2000
Sony Playstation Portable (PSP)	2004
Microsoft Xbox	2001
Microsoft Xbox 360	2005
MPEG-2 SAVI Decoder, Hyundai Electronics	1995
VidyoRoom	2008
VidyoPortal	2008
VidyoDesktop	2008
Cisco Webex Platform ("Webex")	2007
Polycom HDX4000 ("Polycom HDX4000")	2007
Systems Implementing H.222	
Systems Implementing H.261	
Systems Implementing H.262	
Systems Implementing H.263	
Systems Implementing H.264	

For each of the prior art devices identified above, Defendants have listed and produced documents as evidence of the relevant features and functionality to the extent that they are presently available and have been located. Defendants have obtained or are in the process of attempting to obtain the identified devices and have made or will make them available for inspection to the extent they are obtained. To the extent that one or more documents (*e.g.*, user manual) may be used to describe aspects of a particular device, that device is a single reference for prior art purposes under 35 U.S.C. § 102. Some or all of the corroborating references may also separately qualify as prior art publications under 35 U.S.C. § 102 and may be used as invalidating references under 35 U.S.C. §§ 102 and/or 103.

Further, Defendants are actively searching for information regarding at least the systems,

devices, and/or inventions listed above in Table 2-C.

Discovery is ongoing, and Defendants may serve third parties with document subpoenas. For example, Defendants have served subpoenas on Kodi Foundation, Qualcomm Inc., Roku Inc., Hulu LLC, IBM Corp., Peacock TV LLC, and Vudu LLC, and reserve the right to rely on documents produced by them. One or more of these devices, along with related documentation, may be invalidating, and Defendants reserve the right to supplement these contentions accordingly. Defendants continue to investigate each of the identified devices, including through potential discovery needed to be obtained via third party subpoenas, and reserve the right to supplement these contentions and accompanying claim charts after further investigation.

Defendants' reference to a particular product, device, or software program in these contentions should be interpreted as a reference to the system itself as well as to any corresponding patents, publications, or product literature relating to the cited system. Upon information and belief, the systems were publicly disclosed, used, sold, or offered for sale in the United States before the alleged priority date of the Asserted Claims of the '150 Patent. Defendants' investigation of such prior art systems is still ongoing and discovery has not yet been received from third parties who may have information concerning such prior art systems. Accordingly, subsequent discovery may reveal information that affects the disclosures and contentions herein. For example, subsequent discovery may provide additional information regarding whether or not any of the third-party prior art systems anticipate or render obvious the Asserted Claims of the '150 Patent. As such, Defendants reserve all rights to supplement their invalidity contentions.

Many of the inventive, research, design, and development activities concerning these systems and technologies occurred in the United States before the alleged priority date of the Asserted Claims of the '150 Patent. Defendants have obtained, and are in the process of obtaining,

additional information regarding the dates by which the cited products and services were publicly disclosed, used, sold, or offered for sale, the circumstances under which the research, design, and development activities were conducted, and the identities of the particular individuals involved in such activities through publicly available patents, publications, and product literature. The actual dates, circumstances, and identities of individuals will be the subject of third party discovery during this lawsuit, which Defendants reserve the right to rely upon to corroborate the prior art status of the prior art identified herein. Defendants reserve the right to modify, amend, or supplement these contentions if additional information becomes available during the course of this lawsuit. Furthermore, Defendants will make all such devices, software programs, or other products in Defendants' possession, custody, or control available for inspection by Plaintiff.

Consequently, Defendants reserve the right to amend, modify, or supplement these Invalidity Contentions should additional information become available to them through discovery.

In addition, Defendants identify, responsive to Plaintiff's Infringement Contentions, the patents, publications, and/or systems listed in Tables 1-C and 2-C as evidence of the state of the art as it relates to video coding.

Each of these references show that the concept of "multi-view" video signal encoding and decoding is not novel and was well-known for many years before the alleged priority date of the '150 Patent. In light of the references discussed herein, the Asserted Claims of the '150 Patent cannot be valid.

Each prior art patent, publication, or product identified above was either effectively filed or issued (for patents), published (for publications) or known, used, offered for sale or sold (for products) before either the earliest claimed priority date of the '150 Patent to which it is applied for invalidity, and none appears to have been abandoned, suppressed, or concealed, so each such

reference also constitutes evidence of prior invention pursuant to 35 U.S.C. § 102(g), if it is in the U.S. The persons or entities involved with each such invention include the named inventors on the above-identified patents, the authors listed on the above-identified publications, and the entities and individuals identified in connection with the above-identified products.

Because Defendants have not yet completed discovery in this case, including taking depositions of the named inventors, and otherwise obtaining discovery from Plaintiff and third parties, Defendants reserve the right to supplement these contentions with facts, documents, or other information learned at a later point through discovery or further investigation.

D. U.S. Patent No. 9,445,041

Invalidity claim charts identifying disclosures in the references identified in the tables below as to the Asserted Claims of the ’041 Patent are provided in attached Exhibits D1 through D17.

Table 1-D: Prior Art Patents and Printed Publications for the ’041 Patent

Patent No. or Title (Primary Inventor/Author)	Date of Issue/ Publication	Filing Date
US 20100226622A1 (“Morikawa”)	9/9/2010	3/4/2010
US 20120314967A1 (“Suzuki”)	12/13/2012	6/8/2012
US 20110097059A1 (“Sekiguchi”)	4/28/2011	10/18/2010
US 20090185795A1 (“Itani”)	7/23/2009	1/21/2009
JP 2010283689A (“Nakamura”)	12/16/2010	6/5/2009
JP 2013012262A (“Sakai”)	1/17/2013	6/28/2011
US 6,639,649 (“Fredlund”)	10/28/2003	8/6/2001
JP 2010103659A (“Akihiro”)	5/6/2010	5/6/2010
EP 1629369B1 (“Ackley”)	1/24/2018	6/2/2003
US 20080145032A1 (“Lindroos”)	6/19/2008	12/18/2006
JP 2000029472A (“Yoshika”)	1/28/2000	7/8/1998
CN 101902649A (“Meng”)	12/1/2010	7/15/2010
JP 2009218900A (“Akiko”)	9/24/2009	3/11/2008
US 20060285831A1 (“Tanaka”)	12/21/2006	3/20/2006
US 20070065139A1 (“Ishii”)	3/22/2007	6/30/2006
US 20140033074A1 (“Kano”)	1/30/2014	10/2/2013
JP 2004363707A (“Yamaguchi”)	12/24/2004	6/2/2003
US 20060133687A1 (“Ehrlich”)	6/22/2006	12/19/2005

Patent No. or Title (Primary Inventor/Author)	Date of Issue/ Publication	Filing Date
US 20100040344A1 (“Mizuno”)	2/18/2010	7/28/2009
US 20100310229A1 (“Iwata”)	12/9/2010	6/1/2010
US 20110142412A1 (“Tagawa”)	6/16/2011	2/23/2011
US 7,103,260 (“Hinson”)	9/5/2006	3/29/2000
US 20070162571A1 (“Gupta”)	7/12/2007	1/5/2007
US 20120293679A1 (“Aiba”)	11/22/2012	4/20/2012
US 20040081437A1 (“Asada”)	4/29/2004	11/6/2001
US 2014079139A1 (“Sakamoto”)	3/20/2014	8/22/2013
US 20110206352A1 (“Mikawa”)	8/25/2011	2/16/2011
US 20090300676A1 (“Harter, Jr.”)	12/3/2009	5/29/2008
US 7,676,142 (“Hung”)	3/9/2010	6/9/2003
US 8,170,396 (“Kuspa”)	5/1/2012	5/1/2012
US 8,290,350 (“Kurita”)	10/16/2012	10/16/2012
US 8,744,248 (“Nakagawa”)	6/3/2014	12/16/2010
US 8,761,248 (“Li”)	6/24/2014	5/3/2007
US 8,903,222 (“Miyakoshi”)	12/2/2014	1/31/2008
US 9,014,538 (“Otani”)	4/21/2015	9/2/2011
US 9,392,210 (“Berbecel”)	7/12/2016	3/22/2012
US 9,414,038 (“Johar”)	8/9/2016	3/15/2013
US 20100050221A1 (“McCutchen”)	2/25/2010	3/30/2009
US 20130129308A1 (“Karn”)	5/23/2013	11/18/2011
US 20090263100A1 (“Neuman”)	10/22/2009	6/16/2009
US 20080088747A1 (“Kita”)	4/17/2008	9/14/2007
US 20070242139A1 (“Horita”)	3/20/2014	10/19/2005
US 20120327273A1 (“Suzuki”)	12/27/2012	9/6/2012
US 20120114304A1 (“Mikawi”)	5/10/2012	11/4/2011
US 20080089406A1 (“Fukuhara”)	4/17/2008	8/29/2007
US 20120177346A1 (“Kuriyama”)	7/12/2012	3/8/2012
US 20120210216A1 (“Hurst”)	8/16/2012	2/14/2011
US 20120301114A1 (“Johnson”)	11/29/2012	6/4/2012
US 20090195675A1 (“Haneda”)	8/6/2009	4/13/2009
US 20130058619A1 (“Miyakawa”)	3/7/2013	8/24/2012
JP 2008288934 (“Sakaniwa”)	11/27/2008	05/18/2007
JP 2008109245A (“Tokuyama”)	5/8/2008	10/24/2006
JP 2011146847A (“Nakai”)	7/28/2011	1/13/2010
JP 2012105156A (“Inakura”)	3/11/2015	11/11/2010
US 20090185795A1 (“Itani”)	2/7/2012	1/21/2009
US 6549948B1 (“Sasaki”)	4/15/2003	10/17/1995
JP 2008252373A (“Maniwa”)	11/9/2011	3/29/2007
JP 2006180315A (“Hotta”)	7/6/2006	12/24/2004
JP 2010233183A (“Ota”)	11/27/2013	3/30/2009
WO 2007029832A1 (“Hoshino”)	3/15/2007	9/8/2006
US 2009196573A1 (“Kurita”)	10/16/2012	1/28/2009

Patent No. or Title (Primary Inventor/Author)	Date of Issue/ Publication	Filing Date
US 8214857B2 (“Harter”)	7/3/2012	5/29/2008
US 7941029B2 (“Horita”)	5/10/2011	10/19/2005
KR 100899046B1 (“Horita”)	2/22/2007	10/19/2005
US 8699863B2 (“Shimazaki”)	4/15/2014	10/13/2009
US 8605793B2 (“Fukuhara”)	12/10/2013	8/29/2007
US 8023796B2 (“Asada”)	9/20/2011	11/6/2001
US 8488017B2 (“Niida”)	7/16/2013	7/29/2011
WO 2009147850A1 (“Yamada”)	12/10/2009	6/3/2009
US 2002154238A1 (“Hayashi”)	8/15/2006	4/15/2002
JP 4430596B2 (“Tomikawa”)	3/10/2010	8/26/2005
US 2008055318A1 (“Glen”)	3/6/2008	8/31/2006
US 8081255 B2 (“Koshimizu”)	12/20/2011	10/6/2006
US 7895634 B2 (“Ogikubo”)	2/22/2011	11/14/2003
US 8077222 B2 (“Niida ’222”)	12/13/2011	11/5/2008
US 20050232597 A1 (“Shimazaki”)	3/29/2011	3/30/2005
US 20030058224 A1 (“Ushimaru”)	3/27/2003	9/4/2002
WO 2004090703 (“Takabe”)	10/21/2004	4/6/2004
Luca De Cicco, et al., Feedback Control for Adaptive Live Video Streaming (“De Cicco”)	2011	N/A
Jinyong Jo, et al., Synchronized one-to-many Media Streaming with Adaptive Playout Control (“Jo”)	2002	N/A
JonWon Kim, et al., TCP-Friendly Internet Video Streaming Employing Variable Frame-Rate Encoding and Interpolation (“Kim”)	2000	N/A
Jonathan Walpole, et al., A Player for Adaptive MPEG Video Streaming Over The Internet (“Walpole”)	1997	N/A
Derek Moran, How to Slow Down High Frame Rate Video using Sony Vegas Pro (“Moran”)	2013	N/A
Christopher Walker, Frame-rate Conversion (“Walker”)	2012	N/A
R. Armitano, Low-cost telecine detection for real-time video coding, Jan. 22, 1999 (“Armitano”)	1/22/1999	N/A

Table 2-D: Prior Art Systems and Inventions for the '041 Patent

Name of System or Invention[11]	Date of Sale / Offer for Sale / Public Use / Known by Others
NCH Software	2007
Final Cut Pro	2001
Oracle Applications Release 11i ("Oracle")	2011
Sony Vegas Pro	2013
iMovie	1999
PeopleSoft 8 ("PeopleSoft")	2001
Camtasia Studio ("Camtasia")	2002
Movie Maker ("MM")	2000
Magix Video Editor ("MVE")	1997
OpenShot Video Editor ("OpenShot")	2008

For each of the prior art devices identified above, Defendants have listed and produced documents as evidence of the relevant features and functionality to the extent that they are presently available and have been located. Defendants have obtained or are in the process of attempting to obtain the identified devices and have made or will make them available for inspection to the extent they are obtained. To the extent that one or more documents (*e.g.*, user manual) may be used to describe aspects of a particular device, that device is a single reference for prior art purposes under 35 U.S.C. § 102. Some or all of the corroborating references may also separately qualify as prior art publications under 35 U.S.C. § 102 and may be used as invalidating references under 35 U.S.C. §§ 102 and/or 103.

Further, Defendants are actively searching for information regarding at least the systems, devices and/or inventions listed above in Table 2-D.

Discovery is ongoing, and Defendants may serve third parties with document subpoenas.

[11] "System" includes any relevant combination of hardware and/or software including, without limitation, computers, portable media players, mobile phones and tablets, digital cameras and camcorders, DVD / HD-DVD / Blu-Ray players, gaming consoles, set-top boxes, streaming devices, etc.

For example, Defendants have served subpoenas on Magix Computer Products International Co., NCH Software Inc., and OpenShots Studios LLC, and reserve the right to rely on documents produced by them. One or more of these devices, along with related documentation, may be invalidating, and Defendants reserve the right to supplement these contentions accordingly. Defendants continue to investigate each of the identified devices, including through potential discovery needed to be obtained via third party subpoenas, and reserve the right to supplement these contentions and accompanying claim charts after further investigation.

Defendants' reference to a particular product, device, or software program in these contentions should be interpreted as a reference to the system itself as well as to any corresponding patents, publications, or product literature relating to the cited system. Upon information and belief, the systems were publicly disclosed, used, sold, or offered for sale in the United States before the alleged priority date of the Asserted Claims of the '041 Patent. Defendants' investigation of such prior art systems is still ongoing and discovery has not yet been received from third parties who may have information concerning such prior art systems. Accordingly, subsequent discovery may reveal information that affects the disclosures and contentions herein. For example, subsequent discovery may provide additional information regarding whether or not any of the third-party prior art systems anticipate or render obvious the Asserted Claims of the '041 Patent. As such, Defendants reserve all rights to supplement their invalidity contentions.

Many of the inventive, research, design, and development activities concerning these systems and technologies occurred in the United States before the alleged priority date of the Asserted Claims of the '041 Patent. Defendants have obtained, and are in the process of obtaining, additional information regarding the dates by which the cited products and services were publicly disclosed, used, sold, or offered for sale, the circumstances under which the research, design, and

development activities were conducted, and the identities of the particular individuals involved in such activities through publicly available patents, publications, and product literature. The actual dates, circumstances, and identities of individuals will be the subject of third party discovery during this lawsuit, which Defendants reserve the right to rely upon to corroborate the prior art status of the prior art identified herein. Defendants reserve the right to modify, amend, or supplement these contentions if additional information becomes available during the course of this lawsuit. Furthermore, Defendants will make all such devices, software programs, or other products in Defendants' possession, custody, or control available for inspection by Plaintiff.

Consequently, Defendants reserve the right to amend, modify, or supplement these Invalidity Contentions should additional information become available to them through discovery.

In addition, Defendants identify, responsive to Plaintiff's Infringement Contentions, the following patents, publications, and systems listed in Tables 1-D and 2- D as evidence of the state of the art as it relates to video coding.

Each of these references show that the concept of processing video at different frame rates is not novel and was well-known for many years before the alleged priority date of the '041 Patent. In light of the references discussed herein, the Asserted Claims of the '041 Patent cannot be valid.

Each prior art patent, publication, or product identified above was either effectively filed or issued (for patents), published (for publications) or known, used, offered for sale or sold (for products) before either the earliest claimed priority date of the '041 Patent to which it is applied for invalidity, and none appears to have been abandoned, suppressed, or concealed, so each such reference also constitutes evidence of prior invention pursuant to 35 U.S.C. § 102(g), if it is in the U.S. The persons or entities involved with each such invention include the named inventors on the above-identified patents, the authors listed on the above-identified publications, and the entities

and individuals identified in connection with the above-identified products.

Because Defendants have not yet completed discovery in this case, including taking depositions of the named inventors, and otherwise obtaining discovery from Plaintiff and third parties, Defendants reserve the right to supplement these contentions with facts, documents, or other information learned at a later point through discovery or further investigation.

E. U.S. Patent No. 9,986,303

Invalidity claim charts identifying disclosures in the references identified in the tables below as to the Asserted Claims of the ’303 Patent are provided in attached Exhibits E1 through E29.

Table 1-E: Prior Art Patents and Printed Publications for the ’303 Patent

Patent No. or Title (Primary Inventor/Author)	Date of Issue/ Publication	Filing Date
FR 2930106B1 (“Onno”)	10/9/2016	4/8/2014
KR 100461207B1 (“Rosengren”)	4/21/2005	12/2/2004
US 20100189182 (“Hannuksela 182”)	7/29/2010	1/27/2010
US 20030067984A1 (“Sugiyama”)	4/10/2003	11/12/2002
US 20040146011 (“Kesaniemi”)	7/29/2004	12/22/2003
US 20050135478A1 (“Van Der Schaar”)	6/23/2005	12/18/2003
US 20060088094A1 (“Cieplinski”)	4/27/2006	9/15/2005
US 20060233235A1 (“Ryu”)	10/19/2006	4/4/2006
US 20070153916 (“Demircin 916”)	7/5/2007	6/30/2006
US 20080181302 (“Demircin”)	7/31/2008	1/25/2007
US 20080292005A1 (“Xu”)	11/27/2008	4/30/2008
US 20090097548 (“Karczewicz 548”)	4/16/2009	10/14/2008
US 20110211631 (“Kimoto App”)	9/1/2011	8/1/2008
US 20120092453 (“Suh”)	4/19/2012	3/4/2010
US 20120076201A1 (“Kimmich”)	3/29/2012	12/2/2011
US 20120099831A1 (“Wada”)	4/26/2012	10/21/2011
US 2013/0297466 (“Rossato”)	11/7/2013	7/21/2011
US 20130329781A1 (“Su”)	12/12/2013	9/28/2012
US 20140219346A1 (“Ugur”)	8/7/2014	1/7/2014
US 5,886,736 (“Chen”)	3/23/1999	10/24/1996
US 6,263,150B1 (“Okada”)	7/17/2001	5/30/2000
US 6,496,980 (“Tillman”)	12/17/2002	12/7/1998
US 7,383,346B2 (“Gemmell”)	6/3/2008	7/21/2005
US 8,040,952B2 (“Park”)	10/18/2011	3/30/2006

Patent No. or Title (Primary Inventor/Author)	Date of Issue/ Publication	Filing Date
US 8,121,460B2 (“Sasaki”)	2/21/2012	2/28/2011
US 8,204,134B2 (“Hannuksela”)	6/19/2012	1/25/2006
US 8,385,667 (“Haskell”)	2/26/2013	10/17/2008
US 8,462,797 (“Cilli”)	6/11/2013	6/3/2010
US 8,588,293 (“Kimoto”)	11/19/2013	8/1/2008
US 9,479,776B2 (“Wang”)	10/25/2016	6/27/2013
US 9,560,379B2 (“Song”)	1/31/2017	4/16/2015
US 9,774,927B2 (“Rusert”)	9/26/2017	6/17/2013
“A Proposal for SP-frames” (from ITU: Video Coding Experts Group, Twelfth Meeting: Eibsee, Germany, 9-12 January, 2001 (“Karczewicz”)	1/4/2001	N/A
WO2007037618A1 (“Lim”)	4/5/2007	9/27/2006
WO2013115562A1 (“Choi”)	8/8/2013	1/30/2013
WO2014002375A1 (“Moriya”)	1/3/2014	6/26/2012
Senbel, A Family of Hierarchical Encoding Techniques for Image and Video Communications, Dissertation, Computer Science, Old Dominion University (“Senbel”)	1999	N/A
Mathew, Overview of Temporal Scalability With Scalable Video Coding (SVC), Texas Instruments, Nov. 2010 (“Mathew”)	2010	N/A
Sun, An Overview Of Scalable Video Streaming, Mitsubishi Elec. Research Labs., Feb. 2007 (“Sun”)	2007	N/A
Girod, A Brief History Of Streaming Media, Stanford University, 2006/07 (“Girod”)	2006	N/A
Speivogel, Application Layer Scalable Video Coding For The iPhone, University of Neuchatel, 2010 (“Speivogel”)	2010	N/A
Unanue, A Tutorial On H.264/Svc Scalable Video Coding And Its Tradeoff Between Quality, Coding Efficiency And Performance, June 2011 (“Unanue”)	2011	N/A
Laabs, Adaptive Multicast Streaming, Dec. 2012 (“Laabs”)	2012	N/A
ITU-T, Joint Collaborative Team on Video Coding, Scalable HEVC (SHVC) Test Model 5 (SHM 5), 16th Meeting: San Jose, US, 9–17 Jan. 2014 (“JCTVC-P1007”)	2014	N/A
MPEG-4 Advanced Video Coding (“AVC Standard”)	2006	N/A
Adobe release, Adobe Delivers Flash Player 9 with H.264 Video Support (“Adobe”)	2007	N/A
Apple TV, Tech Specs, http://www.apple.com:80/appletv/specs.html (“Apple TV Specs”)	2006	N/A
Qualcomm, MSM7200TM Chipset Solution (“MSM”)	2006	N/A
Horizon Semiconductors Unveils Industry's First True 1080/60p Universal System-On-A-Chip Solution for Next	2007	N/A

Patent No. or Title (Primary Inventor/Author)	Date of Issue/ Publication	Filing Date
Generation HD-DVD and Blu-Ray(TM) Media Players/Recorders, Oct. 1, 2007 ("Horizon")		
Honeywell HRDPX16 H.264 DVR, June 2011 ("Honeywell DVR")	2011	N/A
Apple, iPhone User Guide for iPhone and iPhone 3G ("iPhone Guide")	2008	N/A
H. Schwarz, Overview of the Scalable Video Coding Extension of the H.264/AVC Standard, IEEE Transactions on Circuits and Sys. for Video Tech., Vol. 17, No. 9, Sept. 2007 ("Schwarz")	2007	N/A
Segall, Spatial Scalability Within the H.264/AVC Scalable Video Coding Extension, IEEE Transactions on Circuits and Sys. for Video Tech., Vol. 17, No. 9, Sept. 2007 ("Segall")	2007	N/A
ITU-T Recommendation H.262, Generic Coding of Moving Picturesand associated audio information, Feb. 2000 ("H.262 2000")	2000	N/A
ITU-T Recommendation H.263, Video coding for low bit rate communication, Jan. 2005 ("H.263 2005")	2005	N/A
ITU-T Recommendation H.264, Advanced video coding for generic audiovisual services, Mar. 2005 ("H.264 2005")	2005	N/A
HTC Touch Cruise User Manual, 2009 ("Touch Cruise")	2009	N/A
HTC Touch Dual User Manual, 2008 ("Touch Dual")	2008	N/A
YouTube Live on Apple TV Today; Coming to iPhoneon June 29, June 20, 2007, http://www.apple.com:80/pr/library/2007/06/20youtube.html ("Youtube on Apple")	2007	N/A
Wu et al., Loss Tolerant Bandwidth Aggregation for Multihomed Video Streaming over Heterogeneous Wireless Networks (March 2014) ("Wu")	2014	

Table 2-E: Prior Art Systems and Inventions for the '303 Patent

Name of System or Invention[12]	Date of Sale / Offer for Sale / Public Use / Known by Others
Apple iPhone ("iPhone")	2007
Apple TV ("Apple TV")	2007
HTC Touch Cruise Phone ("HTC Touch Cruise")	2008
HTC Touch Dual Phone ("HTC Touch Dual")	2007

[12] "System" includes any relevant combination of hardware and/or software including, without limitation, computers, portable media players, mobile phones and tablets, digital cameras and camcorders, DVD / HD-DVD / Blu-Ray players, gaming consoles, set-top boxes, streaming devices, etc.

Name of System or Invention[12]	Date of Sale / Offer for Sale / Public Use / Known by Others
Adobe Flash Player 9 ("Adobe FP9")	2007
Qualcomm MSM7200 Chipset Solution ("MSM 7200")	2007
Horizon Semiconductor Hz7220 System-On-a-Chip Solution ("Hz7220")	2007
Honeywell HRDPX16 Performance Series Digital Video Recorder ("HRDPX 16 H.264 DVR")	2011
Roku PhotoBridge HD1000 Product ("Roku Product")	2003
Roku PhotoBridge HD1000 System ("Roku System")	2003
MPEG-2 SAVI Decoder, Hyundai Electronics ("Hyundai Decoder")	1995
VidyoRoom ("VidyoRoom")	2008
VidyoPortal ("VidyoPortal")	2008
VidyoDesktop ("VidyoDesktop")	2008
Cisco Webex Platform ("Webex")	2007
Polycom HDX4000 ("Polycom HDX4000")	2007
FFmpeg ("FFmpeg")	2004
Broadcom BCM7411	2004
Conexant CX2418X	2004
Xbox Media Center (XBMC) / Kodi	2002
VideoLAN Client (VLC)	2001
Sony Playstation	1994
Sony Playstation 2	2000
Sony Playstation Portable (PSP)	2004
Microsoft Xbox	2001
Microsoft Xbox 360	2005
Systems Implementing H.261	
Systems Implementing H.262	
Systems Implementing H.263	
Systems Implementing H.264	

For each of the prior art devices identified above, Defendants have listed and produced documents as evidence of the relevant features and functionality to the extent that they are presently available and have been located. Defendants have obtained or are in the process of attempting to obtain the identified devices and have made or will make them available for inspection to the extent they are obtained. To the extent that one or more documents (*e.g.*, user manual) may be used to describe aspects of a particular device, that device is a single reference

for prior art purposes under 35 U.S.C. § 102. Some or all of the corroborating references may also separately qualify as prior art publications under 35 U.S.C. § 102 and may be used as invalidating references under 35 U.S.C. §§ 102 and/or 103.

Further, Defendants are actively searching for information regarding at least the systems, devices, and/or inventions listed above in Table 2-D.

Discovery is ongoing, and Defendants may serve third parties with document subpoenas. For example, Defendants have served subpoenas on Kodi Foundation, Qualcomm Inc., Roku Inc., Hulu LLC, IBM Corp., Peacock TV LLC, and Vudu LLC , and reserve the right to rely on documents produced by them. One or more of these devices, along with related documentation, may be invalidating, and Defendants reserve the right to supplement these contentions accordingly. Defendants continue to investigate each of the identified devices, including through potential discovery needed to be obtained via third party subpoenas, and reserve the right to supplement these contentions and accompanying claim charts after further investigation.

Defendants' reference to a particular product, device, or software program in these contentions should be interpreted as a reference to the system itself as well as to any corresponding patents, publications, or product literature relating to the cited system. Upon information and belief, the systems were publicly disclosed, used, sold, or offered for sale in the United States before the alleged priority date of the Asserted Claims of the '303 Patent. Defendants' investigation of such prior art systems is still ongoing and discovery has not yet been received from third parties who may have information concerning such prior art systems. Accordingly, subsequent discovery may reveal information that affects the disclosures and contentions herein. For example, subsequent discovery may provide additional information regarding whether or not any of the third-party prior art systems anticipate or render obvious the Asserted Claims of the '303 Patent.

As such, Defendants reserve all rights to supplement their invalidity contentions.

Many of the inventive, research, design, and development activities concerning these systems and technologies occurred in the United States before the alleged priority date of the Asserted Claims of the ’303 Patent. Defendants have obtained, and are in the process of obtaining, additional information regarding the dates by which the cited products and services were publicly disclosed, used, sold, or offered for sale, the circumstances under which the research, design, and development activities were conducted, and the identities of the particular individuals involved in such activities through publicly available patents, publications, and product literature. The actual dates, circumstances, and identities of individuals will be the subject of third party discovery during this lawsuit, which Defendants reserve the right to rely upon to corroborate the prior art status of the prior art identified herein. Defendants reserve the right to modify, amend, or supplement these contentions if additional information becomes available during the course of this lawsuit. Furthermore, Defendants will make all such devices, software programs, or other products in Defendants’ possession, custody, or control available for inspection by Plaintiff.

Consequently, Defendants reserve the right to amend, modify, or supplement these Invalidity Contentions should additional information become available to them through discovery.

In addition, Defendants identify, responsive to Plaintiff’s Amended Infringement Contentions, the patents, publications, and/or systems listed in Tables 1-E and 2-E as evidence of the state of the art as it relates to video coding.

Each of these references show that the concept of transmitting and receiving video data with different resolutions is not novel and was well-known for many years before the alleged priority date of the ’303 Patent. In light of the references discussed herein, the Asserted Claims of the ’303 Patent cannot be valid.

Each prior art patent, publication, or product identified above was either effectively filed or issued (for patents), published (for publications) or known, used, offered for sale or sold (for products) before either the earliest claimed priority date of the ’303 Patent to which it is applied for invalidity, and none appears to have been abandoned, suppressed, or concealed, so each such reference also constitutes evidence of prior invention pursuant to 35 U.S.C. § 102(g), if it is in the U.S. The persons or entities involved with each such invention include the named inventors on the above-identified patents, the authors listed on the above-identified publications, and the entities and individuals identified in connection with the above-identified products.

Because Defendants have not yet completed discovery in this case, including taking depositions of the named inventors, and otherwise obtaining discovery from Plaintiff and third parties, Defendants reserve the right to supplement these contentions with facts, documents, or other information learned at a later point through discovery or further investigation.

F. U.S. Patent No. 10,218,995

Invalidity claim charts identifying disclosures in the references identified in the tables below as to the Asserted Claims of the ’995 Patent are provided in attached Exhibits F1 through F32.

Table 1-F: Prior Art Patents and Printed Publications for the ’995 Patent

Patent No. or Title (Primary Inventor/Author)	Date of Issue/ Publication	Filing Date
US 7,302,002B2 (“Yagasaki”)	11/27/2007	12/30/2002
US 2008095450A1 (“Kirenko”)	4/24/2008	7/13/2005
US 2008031328A1 (“Kimoto”)	2/7/2008	10/6/2005
EP 1837826A1 (“Wedi”)	9/26/2007	3/20/2006
EP 1811786A1 (“Wang”)	7/25/2007	9/6/2006
JP 2007316161A (“Ong”)	12/6/2007	5/23/2006
US 5,677,735A (“Ueno”)	10/14/1997	1/19/1995
US 8,019,169B2 (“Kondo”)	9/13/2011	1/16/2008
JP 2005123913A (“Nakamura”)	5/12/2005	10/17/2003
US 6,393,152B2 (“Takahashi”)	5/21/2002	3/16/1998

Patent No. or Title (Primary Inventor/Author)	Date of Issue/ Publication	Filing Date
US 6,975,768B2 (“Yamaguchi”)	12/13/2005	10/3/2002
US 20080117975A1 (“Sasai”)	5/22/2008	8/29/2005
US 20060114999A1 (“Han”)	6/1/2006	9/7/2005
US 6,690,724B1 (“Kudono”)	2/10/2004	1/9/1998
US 5,122,873A (“Golin”)	6/16/1992	2/19/1991
US 20070277078A1 (“Yamanashi”)	11/29/2007	12/20/2004
US 20060146931A1 (“Boyce”)	7/6/2006	6/17/2004
US 20070253486A1 (“Jeon”)	11/1/2007	10/5/2006
US 20050195900A1 (“Han”)	9/8/2005	3/4/2005
US 20070217519 A1 (“Murayama”)	9/20/2007	7/10/2006
US 6,400,768 (B1) (“Nagumo”)	6/4/2002	6/17/1999
US 7,496,236B2 (“Fogg ’236”)	2/24/2009	3/2/2004
US 6,340,994B1 (“Margulis ’994”)	1/22/2002	3/26/1999
US 60/123,300 (Fogg ’300)	10/15/2002	3/3/1999
US 60/105,926 (Fogg ’926)	10/15/2002	10/28/1998
US 20080175519 (“Nagumo-519”)	7/24/2008	11/5/2007
US 7,379,496 B2 (“Holcomb”)	5/27/2008	8/19/2003
US 6,173,013 B1 (“Suzuki”)	1/9/2001	11/6/1997
US 20080043832 (“Barkley”)	2/21/2008	8/16/2006
US 7,379,496 B2 (“Holcomb”)	5/27/2008	8/19/2003
US 6,173,013 B1 (“Suzuki”)	1/9/2001	11/6/1997
US 7,864,219 B2 (“Shimauchi”)	1/4/2011	6/14/2007
US 20060133677A1 (“Park”)	6/22/2006	12/5/2005
US5926225 (“Fukuhara”)	7/20/1999	11/24/1997
US6249318 (“Girod-318”)	6/19/2001	9/12/1997
US6205177 (“Girod-177”)	3/20/2001	3/24/2000
US6560284 (“Girod-284”)	5/6/2003	6/13/2001
US6807231 (“Wiegand”)	10/19/2004	9/4/1998
US7253831 (US20020092030A1) (“Gu”)	7/11/2002	5/10/2001
US7206347 (US20050058206A1) (“Lim-206”)	3/17/2005	7/7/2003
US7310373 (US20040151248A1) (“Kondo”)	8/5/2004	11/6/2002
US6968005 (US20020021752A1) (“Hannuksela”)	2/21/2002	5/15/2001
US20060126952A1 (“Suzuki”)	6/15/2006	11/18/2005
US20050019000A1 (“Lim-000”)	1/27/2005	6/25/2004
WO2003102868A2 (“Garrido-868”)	12/11/2003	5/28/2003
US20020063807A1 (“Margulis”)	5/30/2002	12/31/2001
WO2007091049A1 (“Slinger”)	8/16/2007	2/6/2007
US20040017853A1 (“Garrido-853”)	1/29/2004	5/28/2003
US20090274380A1 (“Wedi”)	11/5/2009	3/20/2007
JP 2007316161A (“Phek”)	12/6/2007	5/23/2006
US20080137753 (“He”)	6/12/2008	12/8/2006

Patent No. or Title (Primary Inventor/Author)	Date of Issue/ Publication	Filing Date
Sikora, MPEG-1 and MPEG-2 Digital Video Coding Standards, Digital Consumer Electronics Handbook ("Sikora")	1997	N/A
Sikora, MPEG Digital Video-Coding Standards, IEEE Signal Processing Magazine, Sep. 1997 ("Sikora 2")	1997	N/A
Wan, Adaptive format conversion for scalable video coding, Proceedings of the SPIE, Volume 4472, p. 390-401, Dec. 2001 ("Wan")	2001	N/A
Pandit, An extension of the reduced resolution update to complexity constrained spatial scalable video coding, Multimedia Systems and Applications VIII, Volume 6015, pp. 65-76, Oct. 2005 ("Pandit")	2005	N/A
Haskell et al., Digital Video: An Introduction to MPEG 2, Chapter 9 ("Haskell")	2002	N/A
Katsaggelos et al., Super Resolution of Images and Video ("Katsaggelos")	2007	N/A
E.G. Richardson, H.264 and MPEG-4 Video Compression, 2003 ("Richardson")	2003	N/A
Park S C, Park M K, Kang M G, Supoer-resolution image reconstruction- a technical overview, IEEE Sig. Proc. Magazine, Vol. 20, No. 3, pp. 21-36, May 2003 ("Park")	2003	N/A
Papoulis A, Generalized Sampling Expansion, IEEE Trans. on Ccts. and Sys., Vol. 24, No. 11, Nov. 1977 ("Papoulis")	1977	N/A
Kim S P, Bose N K, Reconstruction of 2-D Bandlimited Discrete Signals from Nonuniform Samples, IEE Proc., Vol. 137, No. 3, pp. 197 – 204, Jun. 1990 ("Kim")	1990	N/A
Clark J, Palmer M, Lawrence P, A Transformation Method for the Reconstruction of Functions from Nonuniformly Spaced Samples, IEEE Trans. on ASSP, Vol. 33, No. 4, Oct. 1985 ("Clark")	1985	N/A
Tom B C, Katsaggelos A K, Reconstruction of a high-resolution image by simultaneous registration, restoration, and interpolation of low-resolution images, Proc. ICIP, Vol. 3 ("Tom")	1995	N/A
Hunt B R, Super-Resolution of Images- Algorithms, Principles, Performance, Intl, Jnl. of Imaging Sys. and Technol., Vol. 6, pp. 297-304, Wiley, 1995, Oct. 1995 ("Hunt-1995")	1995	N/A
Rav-Acha A, Peleg S, Restoration of multiple images with motion blur in different directions, Proc. Fifth	2000	N/A

Patent No. or Title (Primary Inventor/Author)	Date of Issue/ Publication	Filing Date
IEEE Workshop on Applications of Computer Vision, Dec. 2000 ("Rav-Acha")		
Gaubatz M, A. Vosoughi A, Scaglione A, Hemami S S, Efficient, Low Complexity Encoding of Multiple, Blurred Noisy Downsampled Images Via Distributed Source Coding Principles, ("Gaubatz")	2006	N/A
Irani M, Peleg S, Improving Resolution by Image Registration , Graphical Models and Im. Proc., Vol. 53, No. 3, pp. 231-239, May 1991IEEEICASSP, May 2006 ("Irani")	2006	N/A
H. Andrews and B. Hunt, Digital Image Restoration. Englewood Cliffs, NJ: Prentice-Hall, 1977 ("Andrews")	1977	N/A
Hunt B R, Kubler O, Karhunen-Loève multispectral image restoration, part I- Theory, pp. 592 - 600, Jun. 1984 ("Hunt-1984")	1984	N/A
Galatsanos N R, Chin R T, Digital restoration of multichannel images, pp. 415 - 421, Mar. 1989 ("Galatsanos")	1989	N/A
Keren D, Peleg S, Brada R, Image sequence enhancement using sub-pixel displacements, Proc. CVPR '88- The Comp. Soc. Conf. on Computer Vision and Pattern Recognition, Jun. 1988 ("Keren")	1988	N/A
Mahmood A, et al, Applied Multi-Dimensional Fusion, British Computer Society, Oxford U Press, 2007 ("Mahmood")	2007	N/A
Reichenbach S E, Li J, Restoration and reconstruction from overlapping images for multi-image fusion, IEEE Trans. on Geoscience and Remote Sensing, Vol. 39, No. 4, Apr. 2001 ("Reichenbach")	2001	N/A
Stark H, Oskoui P, High-resolution image recovery from image-plane arrays, using convex projections, Jnl. Opt. Soc. Am., Vol. 6, No. 11, Nov. 1989 ("Stark")	1989	N/A
Kramer P, O. Hadar, Benois-Pineau J, Domenger J-P, Use of Motion Information in Super-Resolution Mosaicing, ICIP, Oct. 2006 ("Kramer")	2006	N/A
Patti A J, Sezan M I, Tekalp M. Superresolution video reconstruction with arbitrary sampling lattices and nonzero aperture time. IEEE Trans. on Im. Proc., Vol. 6, No. 8, pp. 10 ("Patti")	1997	N/A
Schultz R R, Stevenson R L, Extraction of high-resolution frames from video sequences, IEEE Trans.	1997	N/A

Patent No. or Title (Primary Inventor/Author)	Date of Issue/ Publication	Filing Date
on Im. Proc., Vol. 5, No. 6, Jun. 199664-1078,Aug. 1997 ("Schultz")		
Tsai R Y, Huang T S, Multiframe image restoration and registration, Advances in Computer Vision and Image Processing, Vol. 1, T. S. Huang, ed., Jai Press, pp. 317-319, 1984 ("Tsai")	1984	N/A
Sean Borman, Robert Stevenson, Spatial Resolution Enhancement of Low-Resolution Image Sequences A Comprehensive Review with Directions for Future Research, Lab. Image and Signal Analysis, University of Notre Dame, Tech. Rep., July 8, 1998 ("Borman")	1998	N/A
Schreiber W F, Knapp C F, Kay N D, Synthetic Highs - An Experimental TV Bandwidth Reduction System, J. SMPTE, Vol. 6 ("Schreiber")	1958	N/A
Schwarz - Overview of the scalable video coding extension of the H. 264 AVC standard ("Schwarz")	2007	N/A
Martins B, Forchhammer S, "A unified approach to restoration, deinterlacing and resolution enhancement in decoding MPEG-2 video," IEEE Trans. on CSVT, Vol. 12, No. 9, pp. 803-811, Sep. 2002 ("Martins")	2002	N/A
Gunturk B K, Altunbasak Y, Mersereau R M, Multiframe resolution- enhancement methods for compressed video, IEEE Sig. Proc. Lett., Vol. 9, pp. 170-174, Jun. 2002 ("Gunturk")	2002	N/A
Chen D, Schultz R R, Extraction of high-resolution video stills from MPEG image sequences, in Proc. 1998 IEEE Int. Conf. Image Proc., Vol. 2, pp. 465-469, Oct. 1998 ("Chen-1998")	1998	N/A
Erickson K J, Schultz R R, MPEG-1 super-resolution decoding for the analysis of video still images, 4th IEEE Southwest Symp. on Im. Anal. and Interp., Apr. 2000 ("Erickson")	2000	N/A
Segall, Spatial Scalability Within the H.264/AVC Scalable Video Coding Extension, IEEE Transactions on Circuits and Sys. for Video Tech., Vol. 17, No. 9, Sept. 2007 ("Segall")	2007	N/A
MPEG 95/0340 ("MPEG-95/0340")	1995	N/A
MPEG 96/0654 ("MPEG-96/0654")	1996	N/A
H.263 - q15c11 ("H.263-q15c11")	1997	N/A
H.263 - 200501I ("H.263-Jan2005")	2005	N/A

Table 2-F: Prior Art Systems and Inventions for the ’995 Patent

Name of System or Invention[13]	Date of Sale / Offer for Sale / Public Use / Known by Others
MPEG-2 SAVI Decoder, Hyundai Electronics	1995
Apple iPhone	2007
Apple TV	2007
HTC Touch Cruise Phone	2008
HTC Touch Dual Phone	2008
Adobe Flash Player 9	2007
Qualcomm MSM7200 Chipset Solution	2006
Horizon Semiconductor Hz7220 System-On-a-Chip Solution	2007
VidyoRoom	2008
VidyoPortal	2008
VidyoDesktop	2008
Cisco Webex Platform	2007
Polycom HDX4000	2007
RADVISION Interactive Video Platform	2006
Click to Meet™	2006
SCOPIA™	2006
NVIDIE GeForce 8600	2007
Radeon X1000-series	2005
ATI Technologies Unified Video Decoder	2008
STI7200	2007
Apple Mac OS X v10.4	2005
QuickTime 7	2005
Microsoft Windows Vista	2006
Microsoft Xbox 360	2007
Broadcom BCM7411	2004
Conexant CX2418X	2004
Sony Playstation Portable	2005
Xbox Media Center (XBMC) / Kodi	2002
VideoLAN Client (VLC)	2001
Sony Playstation	1994
Sony Playstation 2	2000
Sony Playstation Portable (PSP)	2004
Microsoft Xbox	2001
Microsoft Xbox 360	2005

[13] “System” includes any relevant combination of hardware and/or software including, without limitation, computers, portable media players, mobile phones and tablets, digital cameras and camcorders, DVD / HD-DVD / Blu-Ray players, gaming consoles, set-top boxes, streaming devices, etc.

Name of System or Invention[13]	Date of Sale / Offer for Sale / Public Use / Known by Others
Roku PhotoBridge HD1000 Product ("Roku Product")	2003
Roku PhotoBridge HD1000 System ("Roku System")	2003
Systems Implementing MPEG-2	
Systems Implementing MPEG-4	
Systems Implementing H.262	
Systems Implementing H.263	
Systems Implementing H.264	
Systems Implementing VC1	
Systems Implementing DivX	
Systems Implementing Xvid	

For each of the prior art devices identified above, Defendants have listed and produced documents as evidence of the relevant features and functionality to the extent that they are presently available and have been located. Defendants have obtained or are in the process of attempting to obtain the identified devices and have made or will make them available for inspection to the extent they are obtained. To the extent that one or more documents (*e.g.*, user manual) may be used to describe aspects of a particular device, that device is a single reference for prior art purposes under 35 U.S.C. § 102. Some or all of the corroborating references may also separately qualify as prior art publications under 35 U.S.C. § 102 and may be used as invalidating references under 35 U.S.C. §§ 102 and/or 103.

Further, Defendants are actively searching for information regarding at least the systems, devices, and/or inventions listed above in Table 2-D.

Discovery is ongoing, and Defendants may serve third parties with document subpoenas. For example, Defendants have served subpoenas on OpenShot Studios, LLC, NCH Software, Inc., Magix Computer Products International Co., Kodi Foundation, Roku, Inc., and Qualcomm Incorporated. One or more of these devices, along with related documentation, may be invalidating, and Defendants reserve the right to supplement these contentions accordingly.

Defendants continue to investigate each of the identified devices, including through potential discovery needed to be obtained via third party subpoenas, and reserve the right to supplement these contentions and accompanying claim charts after further investigation.

Defendants' reference to a particular product, device, or software program in these contentions should be interpreted as a reference to the system itself as well as to any corresponding patents, publications, or product literature relating to the cited system. Upon information and belief, the systems were publicly disclosed, used, sold, or offered for sale in the United States before the alleged priority date of the Asserted Claims of the '995 Patent. Defendants' investigation of such prior art systems is still ongoing and discovery has not yet been received from third parties who may have information concerning such prior art systems. Accordingly, subsequent discovery may reveal information that affects the disclosures and contentions herein. For example, subsequent discovery may provide additional information regarding whether or not any of the third-party prior art systems anticipate or render obvious the Asserted Claims of the '995 Patent. As such, Defendants reserve all rights to supplement their invalidity contentions.

Many of the inventive, research, design, and development activities concerning these systems and technologies occurred in the United States before the alleged priority date of the Asserted Claims of the '995 Patent. Defendants have obtained, and are in the process of obtaining, additional information regarding the dates by which the cited products and services were publicly disclosed, used, sold, or offered for sale, the circumstances under which the research, design, and development activities were conducted, and the identities of the particular individuals involved in such activities through publicly available patents, publications, and product literature. The actual dates, circumstances, and identities of individuals will be the subject of third party discovery during this lawsuit, which Defendants reserve the right to rely upon to corroborate the prior art

status of the prior art identified herein. Defendants reserve the right to modify, amend, or supplement these contentions if additional information becomes available during the course of this lawsuit. Furthermore, Defendants will make all such devices, software programs, or other products in Defendants' possession, custody, or control available for inspection by Plaintiff.

Consequently, Defendants reserve the right to amend, modify, or supplement these Invalidity Contentions should additional information become available to them through discovery.

In addition, Defendants identify, responsive to Plaintiff's Infringement Contentions, the patents, publications, and/or systems listed in Tables 1-F and 2-F as evidence of the state of the art as it relates to video coding.

Each of these references show that the concept of "super-resolution enlargement" of video signals is not novel and was well-known for many years before the alleged priority date of the '995 Patent. In light of the references discussed herein, the Asserted Claims of the '995 Patent cannot be valid.

Each prior art patent, publication, or product identified above was either effectively filed or issued (for patents), published (for publications) or known, used, offered for sale or sold (for products) before either the earliest claimed priority date of the '995 Patent to which it is applied for invalidity, and none appears to have been abandoned, suppressed, or concealed, so each such reference also constitutes evidence of prior invention pursuant to 35 U.S.C. § 102(g), if it is in the U.S. The persons or entities involved with each such invention include the named inventors on the above-identified patents, the authors listed on the above-identified publications, and the entities and individuals identified in connection with the above-identified products.

Because Defendants have not yet completed discovery in this case, including taking depositions of the named inventors, and otherwise obtaining discovery from Plaintiff and third parties, Defendants reserve the right to supplement these contentions with facts, documents, or

other information learned at a later point through discovery or further investigation.

IV. P. R. 3-3(b) – Invalidity Grounds

Pursuant to P.R. 3-3(b), Defendants contend that certain prior art references below anticipate one or more Asserted Claims and that to the extent the identified prior art references do not anticipate the Asserted Claims, those claims are invalid as obvious under 35 U.S.C. §103. Each anticipatory prior art reference, either alone or in combination with other prior art, also renders the Asserted Claims invalid as obvious. In particular, each anticipatory prior art reference may be combined with (1) information generally known to persons skilled in the art at the time of the alleged invention, and/or (2) any of the other identified prior art references. To the extent that Plaintiff contends that any of the anticipatory prior art fails to disclose one or more limitations of the Asserted Claims, Defendants contend that any difference between the reference and the corresponding patent claims would have been obvious to one of ordinary skill in the art. Thus, all anticipation charts should be interpreted as both reflecting anticipation by the reference as well as invalidity due to single reference obviousness, to the extent that Plaintiff contends that any limitation is missing.

A. Anticipation

As stated above, Defendants incorporate by reference all other invalidity contentions related to the Asserted Patents served on or otherwise provided to Plaintiff, whether past or future. In accordance with P.R. 3-3(a), prior art references anticipating the Asserted Claims are provided below. The prior art listed below anticipates the Asserted Claims under the proper construction of the claims and/or under Plaintiff's apparent interpretation of the claims reflected by Plaintiff's Complaint and Infringement Contentions.

1. U.S. Patent No. 6,845,128

The Asserted Claims of the ’128 Patent are anticipated and/or rendered obvious by prior art. Pursuant to P.R. 3-3(a), Defendants identify the prior art references that anticipate or render obvious the ’128 Patent Asserted Claims in the claim charts of Exhibits A1 through A20 (collectively “Appendix A”) which are hereby incorporated by reference as if fully set forth herein. The claim charts of Appendix A show how these prior art references teach or suggest each and every element of the ’128 Patent Asserted Claims. For each reference or combination of references suggested by each chart and/or herein, Defendants indicate whether the prior art renders the claim anticipated and/or obvious pursuant to P.R. 3-3(b).

In addition to contending that the ’128 Patent Asserted Claims are invalid in view of the prior art references cited in the claim charts of Appendix A, Defendants further contend that the ’128 Patent Asserted Claims are invalid as anticipated and/or obvious under U.S.C. §§ 102(a), 102(b), and/or 103 in view of public knowledge and uses and/or offers for sale of products and services related to the subject matter of the cited references. As discovery is ongoing, Defendants continue to investigate these items and to reserve the right to amend or supplement these contentions to include additional information or documents regarding such products and/or systems. In addition to contending that the ’128 Patent Asserted Claims are invalid in view of the explicit disclosures of the prior art references cited in the claim charts of Appendix A, Defendants further contend that the knowledge of skill evidenced by those references render those claims invalid. Defendants further contend that, even if a prior art reference does not expressly disclose all limitations as arranged or combined in the same manner as an asserted claim, a skilled artisan reading the reference would at once envisage the claimed arrangement or combination. *See, e.g.*, *Kennametal Inc. v. Ingersoll Cutting Tool Co.*, 780 F.3d 1376 (Fed. Cir. 2015).

Defendants’ reference to a particular encoder, decoder, circuit, software program, device,

or product in the claim charts of Appendix A should be interpreted alternatively as both as a reference to the product itself and to any corresponding patents, publications, or product literature cited in Appendix A that relates to the cited encoder, decoder, circuit, software program, device, or product. In addition, Defendants may rely on other documents or things that have not yet been located to support its contentions regarding such prior art encoder(s), decoder(s), circuit(s), software program(s), device(s) or product(s) that are referenced in the charts.

Defendants incorporate by reference, as if set forth fully herein, all prior art cited during the prosecution of the '128 Patent, all prior art cited during reexamination proceedings of the '128 Patent, all prior art as described in any future *inter partes* review proceedings of the '128 Patent, and all prior art disclosed during previous litigation proceedings.

Defendants further identify and hereby incorporate by reference as if set forth fully herein the prior art references and invalidity contentions as described in any Other ACT Proceedings wherein invalidity contentions have been, or will be, provided regarding the '128 Patent, its foreign counterparts, or any parent or child patent of the '128 Patent. Defendants reserve the right to use any and all portions of the publication, related publications, commercial embodiments of the publication, and other evidence that is discovered in these lawsuits to demonstrate and/or evidence the components, functionality, and capabilities of the devices and systems disclosed in the references charted.

Where Defendants identify a particular figure in a prior art reference, the identification should be understood to encompass the caption and description of the figure, as well as any text relating to the figure in addition to the figure itself. Similarly, where an identified portion of text refers to a figure, embodiment, or other material, the identification should be understood to include the referenced figure, embodiment, or other material as well. Consistent with P.R. 3-3(c),

Defendants' citations to specific statements, figures, or disclosures in a prior art reference are sufficient to put Plaintiff on notice where each element of each asserted claim is found in the prior art. However, it should be recognized that a person of ordinary skill in the art would generally read a prior art reference as a whole and in the context of other publications, literature, and general knowledge in the field. To understand and interpret any specific statement or disclosure in a prior art reference, a person of ordinary skill in the art would rely upon other information including other publications and general scientific or engineering knowledge. Defendants therefore reserve the right to rely upon other unidentified portions of the prior art references and on other publications and expert testimony to provide context and to aid understanding and interpretation of the identified portions.

Defendants also reserve the right to rely upon other portions of the prior art references, other publications, and the testimony of experts to establish that the alleged inventions would have been obvious to a person of ordinary skill in the art, including the basis of modifying or combining certain cited references. To the extent any limitation is deemed not to be exactly met by an item of prior art, then any purported differences are such that the claimed subject matter as a whole would have been obvious to one skilled in the art at the time of the alleged invention, in view of the state of the art and knowledge of those skilled in the art. To the extent that an element of an Asserted Claim is not anticipated, the claim is rendered obvious by combination with one or more other prior art references identified in Appendix A.

2. U.S. Patent No. 8,090,025

The Asserted Claims of the '025 Patent are anticipated and/or rendered obvious by prior art. Pursuant to P.R. 3-3(a), Defendants identify the prior art references that anticipate or render obvious the '025 Patent Asserted Claims in the claim charts of Exhibits B1 through B27 (collectively "Appendix B") which are hereby incorporated by reference as if fully set forth herein.

The claim charts of Appendix B show how these prior art references teach or suggest each and every element of the ’025 Patent Asserted Claims. For each reference or combination of references suggested by each chart and/or herein, Defendants indicate whether the prior art renders the claim anticipated and/or obvious pursuant to P.R. 3-3(b).

In addition to contending that the ’025 Patent Asserted Claims are invalid in view of the prior art references cited in the claim charts of Appendix B, Defendants further contend that the ’025 Patent Asserted Claims are invalid as anticipated and/or obvious under U.S.C. §§ 102(a), 102(b), and/or 103 in view of public knowledge and uses and/or offers for sale of products and services related to the subject matter of the cited references. As discovery is ongoing, Defendants continue to investigate these items and to reserve the right to amend or supplement these contentions to include additional information or documents regarding such products and/or systems. In addition to contending that the ’025 Patent Asserted Claims are invalid in view of the explicit disclosures of the prior art references cited in the claim charts of Appendix B, Defendants further contend that the knowledge of skill evidenced by those references render those claims invalid. Defendants further contend that, even if a prior art reference does not expressly disclose all limitations as arranged or combined in the same manner as an asserted claim, a skilled artisan reading the reference would at once envisage the claimed arrangement or combination. *See, e.g.*, *Kennametal Inc. v. Ingersoll Cutting Tool Co.*, 780 F.3d 1376 (Fed. Cir. 2015).

Defendants’ reference to a particular encoder, decoder, circuit, software program, device, or product in the claim charts of Appendix B should be interpreted alternatively as both as a reference to the product itself and to any corresponding patents, publications, or product literature cited in Appendix B that relates to the cited encoder, decoder, circuit, software program, device, or product. In addition, Defendants may rely on other documents or things that have not yet been

located to support its contentions regarding such prior art encoder(s), decoder(s), circuit(s), software program(s), device(s) or product(s) that are referenced in the charts.

Defendants incorporate by reference, as if set forth fully herein, all prior art cited during the prosecution of the ’025 Patent, all prior art cited during reexamination proceedings of the ’025 Patent, all prior art as described in any future *inter partes* review proceedings of the ’025 Patent, and all prior art disclosed during previous litigation proceedings.

Defendants further identify and hereby incorporate by reference as if set forth fully herein the prior art references and invalidity contentions as described in any Other ACT Proceedings wherein invalidity contentions have been, or will be, provided regarding the ’025 Patent, its foreign counterparts, or any parent or child patent of the ’025 Patent. Defendants reserve the right to use any and all portions of the publication, related publications, commercial embodiments of the publication, and other evidence that is discovered in these lawsuits to demonstrate and/or evidence the components, functionality, and capabilities of the devices and systems disclosed in the references charted.

Where Defendants identify a particular figure in a prior art reference, the identification should be understood to encompass the caption and description of the figure, as well as any text relating to the figure in addition to the figure itself. Similarly, where an identified portion of text refers to a figure, embodiment, or other material, the identification should be understood to include the referenced figure, embodiment, or other material as well. Consistent with P.R. 3-3(c), Defendants’ citations to specific statements, figures, or disclosures in a prior art reference are sufficient to put Plaintiff on notice where each element of each asserted claim is found in the prior art. However, it should be recognized that a person of ordinary skill in the art would generally read a prior art reference as a whole and in the context of other publications, literature, and general

knowledge in the field. To understand and interpret any specific statement or disclosure in a prior art reference, a person of ordinary skill in the art would rely upon other information including other publications and general scientific or engineering knowledge. Defendants therefore reserve the right to rely upon other unidentified portions of the prior art references and on other publications and expert testimony to provide context and to aid understanding and interpretation of the identified portions.

Defendants also reserve the right to rely upon other portions of the prior art references, other publications, and the testimony of experts to establish that the alleged inventions would have been obvious to a person of ordinary skill in the art, including the basis of modifying or combining certain cited references. To the extent any limitation is deemed not to be exactly met by an item of prior art, then any purported differences are such that the claimed subject matter as a whole would have been obvious to one skilled in the art at the time of the alleged invention, in view of the state of the art and knowledge of those skilled in the art. To the extent that an element of an Asserted Claim is not anticipated, the claim is rendered obvious by combination with one or more other prior art references identified in Appendix B.

3. U.S. Patent No. 8,139,150

The Asserted Claims of the ’150 Patent are anticipated and/or rendered obvious by prior art. Pursuant to P.R. 3-3(a), Defendants identify the prior art references that anticipate or render obvious the ’150 Patent Asserted Claims in the claim charts of Exhibits C1 through C17 (collectively “Appendix C”) which are hereby incorporated by reference as if fully set forth herein. The claim charts of Appendix C show how these prior art references teach or suggest each and every element of the ’150 Patent Asserted Claims. For each reference or combination of references suggested by each chart and/or herein, Defendants indicate whether the prior art renders the claim anticipated and/or obvious pursuant to P.R. 3-3(b).

In addition to contending that the ’150 Patent Asserted Claims are invalid in view of the prior art references cited in the claim charts of Appendix C, Defendants further contend that the ’150 Patent Asserted Claims are invalid as anticipated and/or obvious under U.S.C. §§ 102(a), 102(b), and/or 103 in view of public knowledge and uses and/or offers for sale of products and services related to the subject matter of the cited references. As discovery is ongoing, Defendants continue to investigate these items and to reserve the right to amend or supplement these contentions to include additional information or documents regarding such products and/or systems. In addition to contending that the ’150 Patent Asserted Claims are invalid in view of the explicit disclosures of the prior art references cited in the claim charts of Appendix C, Defendants further contend that the knowledge of skill evidenced by those references render those claims invalid. Defendants further contend that, even if a prior art reference does not expressly disclose all limitations as arranged or combined in the same manner as an asserted claim, a skilled artisan reading the reference would at once envisage the claimed arrangement or combination. *See, e.g.*, *Kennametal Inc. v. Ingersoll Cutting Tool Co.*, 780 F.3d 1376 (Fed. Cir. 2015).

Defendants’ reference to a particular encoder, decoder, circuit, software program, device, or product in the claim charts of Appendix C should be interpreted alternatively as both as a reference to the product itself and to any corresponding patents, publications, or product literature cited in Appendix C that relates to the cited encoder, decoder, circuit, software program, device, or product. In addition, Defendants may rely on other documents or things that have not yet been located to support its contentions regarding such prior art encoder(s), decoder(s), circuit(s), software program(s), device(s) or product(s) that are referenced in the charts.

Defendants incorporate by reference, as if set forth fully herein, all prior art cited during the prosecution of the ’150 Patent, all prior art cited during reexamination proceedings of the ’150

Patent, all prior art as described in any future *inter partes* review proceedings of the ’150 Patent, and all prior art disclosed during previous litigation proceedings.

Defendants further identify and hereby incorporate by reference as if set forth fully herein the prior art references and invalidity contentions as described in any Other ACT Proceedings wherein invalidity contentions have been, or will be, provided regarding the ’150 Patent, its foreign counterparts, or any parent or child patent of the ’150 Patent. Defendants reserve the right to use any and all portions of the publication, related publications, commercial embodiments of the publication, and other evidence that is discovered in these lawsuits to demonstrate and/or evidence the components, functionality, and capabilities of the devices and systems disclosed in the references charted.

Where Defendants identify a particular figure in a prior art reference, the identification should be understood to encompass the caption and description of the figure, as well as any text relating to the figure in addition to the figure itself. Similarly, where an identified portion of text refers to a figure, embodiment, or other material, the identification should be understood to include the referenced figure, embodiment, or other material as well. Consistent with P.R. 3-3(c), Defendants’ citations to specific statements, figures, or disclosures in a prior art reference are sufficient to put Plaintiff on notice where each element of each asserted claim is found in the prior art. However, it should be recognized that a person of ordinary skill in the art would generally read a prior art reference as a whole and in the context of other publications, literature, and general knowledge in the field. To understand and interpret any specific statement or disclosure in a prior art reference, a person of ordinary skill in the art would rely upon other information including other publications and general scientific or engineering knowledge. Defendants therefore reserve the right to rely upon other unidentified portions of the prior art references and on other publications

and expert testimony to provide context and to aid understanding and interpretation of the identified portions.

Defendants also reserve the right to rely upon other portions of the prior art references, other publications, and the testimony of experts to establish that the alleged inventions would have been obvious to a person of ordinary skill in the art, including the basis of modifying or combining certain cited references. To the extent any limitation is deemed not to be exactly met by an item of prior art, then any purported differences are such that the claimed subject matter as a whole would have been obvious to one skilled in the art at the time of the alleged invention, in view of the state of the art and knowledge of those skilled in the art. To the extent that an element of an Asserted Claim is not anticipated, the claim is rendered obvious by combination with one or more other prior art references identified in Appendix C.

4. U.S. Patent No. 9,445,041

The Asserted Claims of the ’041 Patent are anticipated and/or rendered obvious by prior art. Pursuant to P.R. 3-3(a), Defendants identify the prior art references that anticipate or render obvious the ’041 Patent Asserted Claims in the claim charts of Exhibits D1 through D17 (collectively “Appendix D”) which are hereby incorporated by reference as if fully set forth herein. The claim charts of Appendix D show how these prior art references teach or suggest each and every element of the ’041 Patent Asserted Claims. For each reference or combination of references suggested by each chart and/or herein, Defendants indicate whether the prior art renders the claim anticipated and/or obvious pursuant to P.R. 3-3(b).

In addition to contending that the ’041 Patent Asserted Claims are invalid in view of the prior art references cited in the claim charts of Appendix D, Defendants further contend that the ’041 Patent Asserted Claims are invalid as anticipated and/or obvious under U.S.C. §§ 102(a), 102(b), and/or 103 in view of public knowledge and uses and/or offers for sale of products and

services related to the subject matter of the cited references. As discovery is ongoing, Defendants continue to investigate these items and to reserve the right to amend or supplement these contentions to include additional information or documents regarding such products and/or systems. In addition to contending that the ’041 Patent Asserted Claims are invalid in view of the explicit disclosures of the prior art references cited in the claim charts of Appendix D, Defendants further contend that the knowledge of skill evidenced by those references render those claims invalid. Defendants further contend that, even if a prior art reference does not expressly disclose all limitations as arranged or combined in the same manner as an asserted claim, a skilled artisan reading the reference would at once envisage the claimed arrangement or combination. *See, e.g.*, *Kennametal Inc. v. Ingersoll Cutting Tool Co.*, 780 F.3d 1376 (Fed. Cir. 2015).

Defendants’ reference to particular components, circuits, software programs, devices, or products in the claim charts of Appendix D should be interpreted alternatively as both as a reference to the product itself and to any corresponding patents, publications, or product literature cited in Appendix D that relates to the cited encoder, decoder, circuit, software program, device, or product. In addition, Defendants may rely on other documents or things that have not yet been located to support its contentions regarding such prior art component(s), circuit(s), software program(s), device(s), or product(s) that are referenced in the charts.

Defendants incorporate by reference, as if set forth fully herein, all prior art cited during the prosecution of the ’041 Patent, all prior art cited during reexamination proceedings of the ’041 Patent, all prior art as described in any *inter partes* review proceedings of the ’041 Patent, and all prior art disclosed during previous litigation proceedings.

Defendants further identify and hereby incorporate by reference as if set forth fully herein the prior art references and invalidity contentions as described in any Other ACT Proceedings

wherein invalidity contentions have been, or will be, provided regarding the ’041 Patent, its foreign counterparts, or any parent or child patent of the ’041 Patent. Defendants reserve the right to use any and all portions of the publication, related publications, commercial embodiments of the publication, and other evidence that is discovered in these lawsuits to demonstrate and/or evidence the components, functionality, and capabilities of the devices and systems disclosed in the references charted.

Where Defendants identify a particular figure in a prior art reference, the identification should be understood to encompass the caption and description of the figure, as well as any text relating to the figure in addition to the figure itself. Similarly, where an identified portion of text refers to a figure, embodiment, or other material, the identification should be understood to include the referenced figure, embodiment, or other material as well. Consistent with P.R. 3-3(c), Defendants’ citations to specific statements, figures, or disclosures in a prior art reference are sufficient to put Plaintiff on notice where each element of each asserted claim is found in the prior art. However, it should be recognized that a person of ordinary skill in the art would generally read a prior art reference as a whole and in the context of other publications, literature, and general knowledge in the field. To understand and interpret any specific statement or disclosure in a prior art reference, a person of ordinary skill in the art would rely upon other information including other publications and general scientific or engineering knowledge. Defendants therefore reserve the right to rely upon other unidentified portions of the prior art references and on other publications and expert testimony to provide context and to aid understanding and interpretation of the identified portions.

Defendants also reserve the right to rely upon other portions of the prior art references, other publications, and the testimony of experts to establish that the alleged inventions would have

been obvious to a person of ordinary skill in the art, including the basis of modifying or combining certain cited references. To the extent any limitation is deemed not to be exactly met by an item of prior art, then any purported differences are such that the claimed subject matter as a whole would have been obvious to one skilled in the art at the time of the alleged invention, in view of the state of the art and knowledge of those skilled in the art. To the extent that an element of an Asserted Claim is not anticipated, the claim is rendered obvious by combination with one or more other prior art references identified in Appendix D.

5. U.S. Patent No. 9,986,303

The Asserted Claims of the '303 Patent are anticipated and/or rendered obvious by prior art. Pursuant to P.R. 3-3(a), Defendants identify the prior art references that anticipate or render obvious the '303 Patent Asserted Claims in the claim charts of Exhibits E1 through E28 (collectively "Appendix E") which are hereby incorporated by reference as if fully set forth herein. The claim charts of Appendix E show how these prior art references teach or suggest each and every element of the '303 Patent Asserted Claims. For each reference or combination of references suggested by each chart and/or herein, Defendants indicate whether the prior art renders the claim anticipated and/or obvious pursuant to P.R. 3-3(b).

In addition to contending that the '303 Patent Asserted Claims are invalid in view of the prior art references cited in the claim charts of Appendix E, Defendants further contend that the '303 Patent Asserted Claims are invalid as anticipated and/or obvious under U.S.C. §§ 102(a), 102(b), and/or 103 in view of public knowledge and uses and/or offers for sale of products and services related to the subject matter of the cited references. As discovery is ongoing, Defendants continue to investigate these items and to reserve the right to amend or supplement these contentions to include additional information or documents regarding such products and/or systems. In addition to contending that the '303 Patent Asserted Claims are invalid in view of the

explicit disclosures of the prior art references cited in the claim charts of Appendix E, Defendants further contend that the knowledge of skill evidenced by those references render those claims invalid. Defendants further contend that, even if a prior art reference does not expressly disclose all limitations as arranged or combined in the same manner as an asserted claim, a skilled artisan reading the reference would at once envisage the claimed arrangement or combination. *See, e.g.*, *Kennametal Inc. v. Ingersoll Cutting Tool Co.*, 780 F.3d 1376 (Fed. Cir. 2015).

Defendants' reference to a particular encoder, decoder, circuit, software program, device, or product in the claim charts of Appendix E should be interpreted alternatively as both as a reference to the product itself and to any corresponding patents, publications, or product literature cited in Appendix E that relates to the cited encoder, decoder, circuit, software program, device, or product. In addition, Defendants may rely on other documents or things that have not yet been located to support its contentions regarding such prior art encoder(s), decoder(s), circuit(s), software program(s), device(s) or product(s) that are referenced in the charts.

Defendants incorporate by reference, as if set forth fully herein, all prior art cited during the prosecution of the '303 Patent, all prior art cited during reexamination proceedings of the '303 Patent, all prior art as described in any future *inter partes* review proceedings of the '303 Patent, and all prior art disclosed during previous litigation proceedings.

Defendants further identify and hereby incorporate by reference as if set forth fully herein the prior art references and invalidity contentions as described in any Other ACT Proceedings wherein invalidity contentions have been, or will be, provided regarding the '303 Patent, its foreign counterparts, or any parent or child patent of the '303 Patent. Defendants reserve the right to use any and all portions of the publication, related publications, commercial embodiments of the publication, and other evidence that is discovered in these lawsuits to demonstrate and/or evidence

the components, functionality, and capabilities of the devices and systems disclosed in the references charted.

Where Defendants identify a particular figure in a prior art reference, the identification should be understood to encompass the caption and description of the figure, as well as any text relating to the figure in addition to the figure itself. Similarly, where an identified portion of text refers to a figure, embodiment, or other material, the identification should be understood to include the referenced figure, embodiment, or other material as well. Consistent with P.R. 3-3(c), Defendants' citations to specific statements, figures, or disclosures in a prior art reference are sufficient to put Plaintiff on notice where each element of each asserted claim is found in the prior art. However, it should be recognized that a person of ordinary skill in the art would generally read a prior art reference as a whole and in the context of other publications, literature, and general knowledge in the field. To understand and interpret any specific statement or disclosure in a prior art reference, a person of ordinary skill in the art would rely upon other information including other publications and general scientific or engineering knowledge. Defendants therefore reserve the right to rely upon other unidentified portions of the prior art references and on other publications and expert testimony to provide context and to aid understanding and interpretation of the identified portions.

Defendants also reserve the right to rely upon other portions of the prior art references, other publications, and the testimony of experts to establish that the alleged inventions would have been obvious to a person of ordinary skill in the art, including the basis of modifying or combining certain cited references. To the extent any limitation is deemed not to be exactly met by an item of prior art, then any purported differences are such that the claimed subject matter as a whole would have been obvious to one skilled in the art at the time of the alleged invention, in view of

the state of the art and knowledge of those skilled in the art. To the extent that an element of an Asserted Claim is not anticipated, the claim is rendered obvious by combination with one or more other prior art references identified in Appendix E.

6. U.S. Patent No. 10,218,995

The Asserted Claims of the '995 Patent are anticipated and/or rendered obvious by prior art. Pursuant to P.R. 3-3(a), Defendants identify the prior art references that anticipate or render obvious the '995 Patent Asserted Claims in the claim charts of Exhibits F1 through F31 (collectively "Appendix F") which are hereby incorporated by reference as if fully set forth herein. The claim charts of Appendix F show how these prior art references teach or suggest each and every element of the '995 Patent Asserted Claims. For each reference or combination of references suggested by each chart and/or herein, Defendants indicate whether the prior art renders the claim anticipated and/or obvious pursuant to P.R. 3-3(b).

In addition to contending that the '995 Patent Asserted Claims are invalid in view of the prior art references cited in the claim charts of Appendix F, Defendants further contend that the '995 Patent Asserted Claims are invalid as anticipated and/or obvious under U.S.C. §§ 102(a), 102(b), and/or 103 in view of public knowledge and uses and/or offers for sale of products and services related to the subject matter of the cited references. As discovery is ongoing, Defendants continue to investigate these items and to reserve the right to amend or supplement these contentions to include additional information or documents regarding such products and/or systems. In addition to contending that the '995 Patent Asserted Claims are invalid in view of the explicit disclosures of the prior art references cited in the claim charts of Appendix F, Defendants further contend that the knowledge of skill evidenced by those references render those claims invalid. Defendants further contend that, even if a prior art reference does not expressly disclose all limitations as arranged or combined in the same manner as an asserted claim, a skilled artisan

reading the reference would at once envisage the claimed arrangement or combination. *See, e.g.*, *Kennametal Inc. v. Ingersoll Cutting Tool Co.*, 780 F.3d 1376 (Fed. Cir. 2015).

Defendants' reference to a particular encoder, decoder, circuit, software program, device, or product in the claim charts of Appendix F should be interpreted alternatively as both as a reference to the product itself and to any corresponding patents, publications, or product literature cited in Appendix F that relates to the cited encoder, decoder, circuit, software program, device, or product. In addition, Defendants may rely on other documents or things that have not yet been located to support its contentions regarding such prior art encoder(s), decoder(s), circuit(s), software program(s), device(s) or product(s) that are referenced in the charts.

Defendants incorporate by reference, as if set forth fully herein, all prior art cited during the prosecution of the '995 Patent, all prior art cited during reexamination proceedings of the '995 Patent, all prior art as described in any future *inter partes* review proceedings of the '995 Patent, and all prior art disclosed during previous litigation proceedings.

Defendants further identify and hereby incorporate by reference as if set forth fully herein the prior art references and invalidity contentions as described in any Other ACT Proceedings wherein invalidity contentions have been, or will be, provided regarding the '995 Patent, its foreign counterparts, or any parent or child patent of the '995 Patent. Defendants reserve the right to use any and all portions of the publication, related publications, commercial embodiments of the publication, and other evidence that is discovered in these lawsuits to demonstrate and/or evidence the components, functionality, and capabilities of the devices and systems disclosed in the references charted.

Where Defendants identify a particular figure in a prior art reference, the identification should be understood to encompass the caption and description of the figure, as well as any text

relating to the figure in addition to the figure itself. Similarly, where an identified portion of text refers to a figure, embodiment, or other material, the identification should be understood to include the referenced figure, embodiment, or other material as well. Consistent with P.R. 3-3(c), Defendants' citations to specific statements, figures, or disclosures in a prior art reference are sufficient to put Plaintiff on notice where each element of each asserted claim is found in the prior art. However, it should be recognized that a person of ordinary skill in the art would generally read a prior art reference as a whole and in the context of other publications, literature, and general knowledge in the field. To understand and interpret any specific statement or disclosure in a prior art reference, a person of ordinary skill in the art would rely upon other information including other publications and general scientific or engineering knowledge. Defendants therefore reserve the right to rely upon other unidentified portions of the prior art references and on other publications and expert testimony to provide context and to aid understanding and interpretation of the identified portions.

Defendants also reserve the right to rely upon other portions of the prior art references, other publications, and the testimony of experts to establish that the alleged inventions would have been obvious to a person of ordinary skill in the art, including the basis of modifying or combining certain cited references. To the extent any limitation is deemed not to be exactly met by an item of prior art, then any purported differences are such that the claimed subject matter as a whole would have been obvious to one skilled in the art at the time of the alleged invention, in view of the state of the art and knowledge of those skilled in the art. To the extent that an element of an Asserted Claim is not anticipated, the claim is rendered obvious by combination with one or more other prior art references identified in Appendix F.

B. Obviousness

As stated above, Defendants incorporate by reference all other invalidity contentions related to the Asserted Patents served on or otherwise provided to Plaintiff, whether past or in the future. In addition to certain claims being anticipated at least under Plaintiff's apparent claim constructions as indicated above, the Asserted Claims are also invalid as obvious over the same teachings identified for anticipation. Further, the Asserted Claims are obvious over various combinations of the references shown in the claim charts accompanying or incorporated by reference into this disclosure. No Asserted Claim goes beyond combining known elements to achieve predictable results or does more than choose between clear alternatives known to those of skill in the art. Thus, to the extent that an Asserted Claim is not anticipated, it is nevertheless invalid as obvious. Specifically, Defendants assert that any charted or incorporated reference in combination with one or more other charted or incorporated references renders the Asserted Claims obvious.

In *KSR International Co. v. Teleflex, Inc.*, the United States Supreme Court held that, among other things, "[t]he combination of familiar elements according to known methods is likely to be obvious when it does no more than yield predictable results." 550 U.S. 398, 416 (2007); *see also id.* at 417 ("[A] court must ask whether the improvement is more than the predictable use of prior art elements according to their established functions."). In particular, a patent is obvious where "the content of the prior art, the scope of the patent claim, and the level of ordinary skill are not in material dispute, and the obviousness of the claim is apparent in light of these factors." *Id.* at 427. The Supreme Court found that "if a technique has been used to improve one device, and a person of ordinary skill in the art would recognize that it would improve similar devices in the same way, using the technique is obvious unless its actual application is beyond his or her skill."

Id. at 417.

Moreover, the Supreme Court recognizes that market pressures will motivate a person of ordinary skill to survey known art for solutions to problems. *Id.* at 421 ("When there is a design need or market pressure to solve a problem and there are a finite number of identified, predictable solutions, a person of ordinary skill in the art has good reason to pursue the known options within his or her technical grasp."). When a person of ordinary skill uses an identified, predictable solution to solve a problem, "it is likely the product not of innovation but of ordinary skill and common sense." *Id.* In addition, when a work is available in one field of endeavor, design incentives and other market forces can prompt variations of it, either in the same field or a different one. *Id.* at 417. If a person of ordinary skill can implement a predictable variation, U.S.C. § 103 bars its patentability. *Id.*

"'[A]ny need or problem known in the field of endeavor at the time of invention and addressed by the patent can provide a reason for combining the elements in the manner claimed.'" *Intel Corp. v. PACT XPP Schweiz AG*, 61 F.4th 1373, 1379 (Fed. Cir. 2023) (quoting *KSR Int'l Co. v. Teleflex Inc.*, 550 U.S. 398, 420 (2007)). "Additionally, 'universal' motivations known in a particular field to improve technoogy provide 'a motivation to combine prior art references ***even absent any hint of suggestion*** in the references themselves.'" *Id.* (quoting *Intel Corp. v. Qualcomm Inc.*, 21 F.4th 784, 797-99 (Fed. Cir. 2021)) (original emphasis). Thus, motivations to combine, as well as the general state of the art, may be found in a variety of places including, but not limited to, in the references defined above, and the specification of the Asserted Patents. For example, each piece of prior art relates to systems and methods for decoding and/or encoding video data. A person of ordinary skill in the art at the time of the alleged invention would have been motivated to combine any one piece of identified prior art with any other identified piece of prior

art. For at least this reason, it would have been obvious to a person of skill in the art at the time of the alleged invention of the Asserted Claims to combine the various references cited herein so as to practice the Asserted Claims and there is a motivation in the art to make such a combination. Further reasons to combine the references identified in these charts include the nature of the problem being solved, the express, implied, and/or inherent teachings of the prior art, the knowledge of persons of ordinary skill in the art, the fact that the prior art is generally directed towards methods and systems for decoding and/or encoding video data, that such combinations would have yielded predictable results, and that such combinations would have represented known alternatives to a person of ordinary skill in the art.

The law does not require evidence of a specific motivation to combine prior art where the combiation would yield expected results and at most simply represents a known alternative or design choice to one of skill in the art. *See Apple Inc. v. Samsung Elecs. Co*., 839 F.3d 1034, 1058 (Fed. Cir. 2016); *Intercontinental Great Brands LLC v. Kellogg N. Am. Co*., 869 F.3d 1336, 1344 (Fed. Cir. 2017); *KSR Int'l Co. v. Teleflex, Inc*., 127 S. Ct. 1727, 1739-40 (2007) (rejecting the Federal Circuit's "rigid" application of the teaching, suggestion, or motivation to combine test, and instead applying an "expansive and flexible" approach). Indeed, the Supreme Court held that a POSITA is "a person of ordinary creativity, not an automaton" and "in many cases a person of ordinary skill in the art will be able to fit the teachings of multiple patents together like pieces of a puzzle." *KSR*, 550 U.S. at 420-21.

Nevertheless, in addition to the information contained immediately above and elsewhere in these contentions, Defendants identify additional motivations and reasons to combine. For example, in addition to the specific motivations identified herein, motivation to modify a particular reference or to combine any two or more of the identified references comes from (a) the nature of

the problem being solved, (b) the teachings of the prior art, (c) the knowledge of persons of ordinary skill in the art, (d) the fact that all of the references teach systems, apparatuses, and methods related to the subject matter and address the same technical issues described in the Asserted Patents, and (e) one would be motivated by considerations of efficiency, effectiveness, convenience, cost-savings, and accessibility, to combine the various teachings of the references. Additionally, one would be motivated to address the alleged problems or achieve the purported objectives identified in the Background sections of the Asserted Patents, of the references cited on the face of the Asserted Patents, and of the other references cited herein.

In sum, motivations to modify or combine the identified references including the references listed above can be found via, for example, discussions in the cited references, the state of the art discussed in the references, and the knowledge of one of ordinary skill in the art. One of ordinary skill in the art would have been motivated to combine these references, because these references relate to common objectives and subject matter. The references share commonalities in terms of their general subject matter as well as the types of equipment, products, systems, and/or methods used. Further, certain prior art references explicitly or implicitly reference other prior art references, share common authors or inventors, were published in the same journals, were compiled by a common author of a compilation or reference book, were presented at the same conferences, and/or were developed at common companies, schools, or organizations, which would motivate one of ordinary skill in the art to combine them. These references are within the field of the Asserted Patents and are directed to similar subject matter within the field. Additionally, the references, and any products, devices, or processes described in the references, existed and/or were invented in the same time period providing further motivation for combination. These disclosures were provided without prejudice to any arguments or objections concerning the

relevance of motivation to combine in connection with any invalidity contentions.

Defendants reserve the right to further specify the motivations to combine the prior art in response to positions that Plaintiff may take later in this case and as discovery, including third party discovery, proceeds. Defendants may rely on any and all portions of the prior art, other documents, and expert testimony to establish that a person of ordinary skill in the art would have been motivated to modify or combine the prior art so as to render the claims invalid as obvious. Moreover, Defendants reserve the right to rely on later identified sources of information, including but not limited to witness testimony and other discovery, to establish the state of the art in the relevant time frame pertaining to the Asserted Patents.

Additionally, Defendants note that Plaintiff has neither provided any contention that secondary considerations of non-obviousness exist for any Asserted Patent nor provided any evidence of such secondary considerations. Defendants are not aware of any evidence supporting the existence of any such secondary considerations. This lack of evidence further renders the Asserted Claims obvious. Proving any such secondary considerations is ACT's burden. *See, e.g.*, *ZUP, LLC v. Nach Mfg., Inc.*, 896 F.3d 1365, 1373 (Fed. Cir. 2018) ("[A] patentee bears the burden of production with respect to evidence of secondary considerations of nonobviousness."). To the extent ACT is permitted to introduce contentions and/or evidence concerning secondary considerations in the future, Defendants reserve all rights to rebut those contentions if and when ACT identifies them. In the meantime, Defendants note the complete lack of any such evidence in the record. Moreover, Defendants further contend that, in any event, the evidence of obviousness for each asserted claim is so overwhelming that secondary considerations are necessarily insufficient to rebut Defendants' showing. *See, e.g.*, *Ohio Willow Wood Co. v. Alps South, LLC*, 735 F.3d 1333, 1344 (Fed. Cir. 2013) ("[W]here a claimed invention represents no

more than the predictable use of prior art elements according to established functions, as here, evidence of secondary indicia are frequently deemed inadequate to establish non-obviousness.”).

While Defendants reserve the right to rely on any combination of the references reflected in their charts or incorporated herein by reference, Defendants provide the following exemplary and non-exhaustive references and/or combinations evidencing invalidity of the claims of the Asserted Patents. The combinations of prior art listed below render obvious the Asserted Claims under the proper construction of the claims and/or under Plaintiff’s apparent interpretation of the claims as set forth by Plaintiff in its Complaint and Infringement Contentions.

1. U.S. Patent No. 6,845,128

Pursuant to P.R. 3-3(a) and (b), Defendants identify in Appendix A the prior art references that render obvious the Asserted Claims of the ’128 Patent and include below exemplary combinations showing the obviousness of the ’128 Patent Asserted Claims in view of the prior art. To the extent Plaintiff contends that an element is not disclosed in any one of the anticipatory references described in Appendix A, the limitation would have been obvious in light of the disclosures within the reference and the knowledge of one of ordinary skill in the art at the time of the ’128 Patent. Moreover, to the extent Plaintiff contends that an element is not disclosed in any one of the anticipatory references described in Appendix A, such reference may be combined with any other references listed in Appendix A for such element, thereby rendering the claims invalid for obviousness. To the extent a finder of fact determines that a limitation of any of the ’128 Patent Asserted Claims is not disclosed by one of the references identified above pursuant to P.R. 3-3(a), the claim is nevertheless unpatentable as obvious because they contain nothing that constitutes a patentable innovation. To the extent a finder of fact determines that a limitation of the ’128 Patent Asserted Claims is not anticipated, it does not go beyond combining familiar elements according to known methods to achieve predictable results or does more than choose between clear

alternatives known to those of ordinary skill in the art.

a. Obviousness Rationale and Motivations to Combine

Obviousness: For at least the reasons described in these contentions, it would have been obvious to one of ordinary skill in the art to combine any of a number of prior art references, including any combination of those prior art references identified in Appendix A along with the knowledge of one of ordinary skill in the art to meet the limitations of the ’128 Patent Asserted Claims. As a result, the references identified herein render one or more Asserted Claims of the ’128 Patent obvious when the references are read in combination with each other, and/or when read in view of the state of the art and knowledge of those skilled in the art. Each and every reference identified is also relevant to the state of the art at the time of the alleged invention. Any of the references disclosed above may be combined with one another to render obvious (and therefore invalid) each of ACT’s Asserted Claims. Defendants may rely upon a subset of the identified references or all of the references identified herein, including all references in Appendix A, for purposes of obviousness depending on the Court’s claim construction, positions taken by ACT during this litigation, and further investigation and discovery.

Reservation of Rights: Moreover, as mentioned above, Defendants have not yet completed their search or discovery concerning additional prior art. As such, Defendants’ inclusion of exemplary combinations does not preclude them from identifying other invalidating combinations as appropriate, and Defendants reserve the right to identify additional specific combinations as well as to detail and explain such combinations.

No More Than Ordinary Variations of Prior Art; No Unexpected Results: To the extent not anticipated, the ’128 Patent Asserted Claims represent no more than the result of ordinary variations of the prior art. Defendants further believe that no showing of a specific

motivation to combine prior art is required to combine the references disclosed above and in the attached charts, as each combination of art would have no unexpected results, and at most would simply represent a known alternative to one of ordinary skill in the art. *See KSR Int'l Co. v. Teleflex, Inc.*, 550 U.S. 398, 415-16 (2007) (rejecting the Federal Circuit's "rigid" application of the teaching, suggestion, or motivation to combine test, instead espousing an "expansive and flexible" approach); *Apple Inc. v. Samsung Elecs. Co*., 839 F.3d 1034, 1058 (Fed. Cir. 2016); *Intercontinental Great Brands LLC v. Kellogg N. Am. Co*., 869 F.3d 1336, 1344 (Fed. Cir. 2017). Indeed, the Supreme Court held that a person of ordinary skill in the art is "a person of ordinary creativity, not an automaton" and "in many cases a person of ordinary skill in the art will be able to fit the teachings of multiple patents together like pieces of a puzzle." *Id.* at 420-21. Nevertheless, in addition to the information contained elsewhere in these contentions, Defendants identify motivation and reason to combine the cited art.

Predictable Results; Obvious to Try: One or more combinations of the prior art references identified in Appendix A would have been obvious because these references would have been combined using: known methods to yield predictable results; known techniques in the same way; a simple substitution of one known, equivalent element for another to obtain predictable results; and/or a teaching, suggestion, or motivation in the prior art generally. In addition, it would have been obvious to try combining the prior art references identified above because there were only a finite number of predictable solutions and/or because known work in one field of endeavor prompted variations based on predictable design incentives and/or market forces either in the same field or a different one. Further, the combinations of the prior art references identified in Appendix A would have been obvious because the combinations represent known potential options with a reasonable expectation of success.

Interrelated Teachings: Additional evidence that there would have been a motivation to combine the prior art references identified above includes the interrelated teachings of multiple prior art references; common authorship; the effects of demands known to the design community or present in the marketplace; the existence of a known problem for which there was an obvious solution encompassed by the ’128 Patent Asserted Claims; the existence of a known need or problem in the field of the endeavor at the time of the alleged invention(s); and the background knowledge that would have been possessed by a person having ordinary skill in the art.

Summary of Motivations to Combine: Thus, the motivation to combine the teachings of the prior art references disclosed in Appendix A is found in the references themselves and also in: (1) the nature of the problem being solved; (2) the express, implied and inherent teachings of the prior art; (3) the knowledge of persons of ordinary skill in the art; (4) the predictable results obtained in combining the different elements of the prior art; (5) the predictable results obtained in simple substitution of one known element for another; (6) the use of a known technique to improve similar devices, methods, or products in the same way; (7) the predictable results obtained in applying a known technique to a known device, method, or product ready for improvement; (8) the finite number of identified predictable solutions that had a reasonable expectation of success; and (9) known work in various technological fields that could be applied to the same or different technological fields based on design incentives or other market forces.

Same Area of Technology: Additionally, it would be obvious to one of ordinary skill in the art to consult and/or combine any of the prior art listed in Appendix A because all of these references relate to the same area of technology and/or are from analogous art. The ’128 Patent Asserted Claims are directed to emphasis processing applied to an input video signal to obtain a video bitstream. ’128 Patent at Abstract. The ’128 Patent Asserted Claims merely unite old

elements, well known in the field, with no change in their respective function or result. Given the interrelated teachings of the prior art, the effects of demands known to the design community or present in the marketplace, and the background knowledge possessed by a person having ordinary skill in the art, it would have been obvious for one of ordinary skill in the art to combine these familiar elements, disclosed and/or embodied in the prior art listed above to practice the '128 Patent Asserted Claims.

Same Technical Issues: A person of ordinary skill would have been motivated to combine the above prior art based on his/her knowledge, the nature of the problem to be solved, and the teachings of the prior art. The identified prior art addresses the same or similar technical issues and suggests the same or similar solutions to those issues. Moreover, some of the prior art refer to or discuss other prior art, illustrating the close technical relationship among the prior art. For the '128 Patent, one of ordinary skill in the art would have been motivated to combine known prior art solutions described in these references relating to image processing and/or digital camera related features.

Demand and Market Forces: For example, market forces suggested a demand for increased quality in image processing, and thus one of skill in the art would have thought to combine or modify references that described known methods that one of skill in the art would have recognized as offering improvements to solutions of that time.

Known Elements; Obvious to Try: Moreover, many of the claim elements were already known as admitted by the applicants in the patent specification. These elements represented design choices available to a person of ordinary skill. When there is a design need or market pressure to solve a problem such as identified previously and/or described in the '128 Patent, and there are a finite number of identified, predictable solutions, a person of ordinary skill would be motivated to

combine the known options that are within his or her technical grasp. For the ’128 Patent, there are a finite number of approaches for reducing noise when creating a video bit stream by applying an emphasis level to an input video signal. For example, as of the priority date of the ’128 Patent, a POSITA would have been very familiar with basic elements of the ’128 Patent’s claims such as setting an emphasis level for an input video signal, applying the emphasis level to the video signal, encoding an emphasized video signal, and multiplexing information into the encoded video signal. Such elements were within the knowledge of a POSITA, whether or not disclosed in any particular reference, and the inclusion of such elements in the ’128 Patent’s claims does not render them novel or non-obvious.

As the ’128 Patent acknowledges, emphasizing the high frequency content in video and audio signals is a well-known technique to offset the higher amplitude noise that is well-known to exist at higher frequencies. It is well known that higher frequency signals experience more noise, particularly in FM modulated systems, and that emphasizing the signal prior to recording or transmitting reduces such noise. For example, by the filing date of the asserted patents, numerous textbooks described this phenomenon, including the following descriptions.

> 2.3.4 Preemphasis and Deemphasis
>
> The FM transmission/reception systems offers significantly better noise-rejection characteristics than AM. However, FM noise rejection is more favorable at low modulating frequencies than at high frequencies because of the reduction in the number of sidebands at higher frequencies. To offset this problem, the input signal to the FM transmitter may be preemphasized to increase the amplitude of higher-frequency signal components in normal program material. FM receivers utilize complementary deemphasis to produce flat overall system frequency response.

Whitaker, Power Vacuum Tubes Handbook, Chapter 2 Modulation Systems and Characteristics (1999) at 69 (emphasis added); Evans ed., Satellite Communication Systems 3rd Edition, Chapter 9 Modulation and Modems (1999) (Evans 1999), at 164 (“Preemphasis and deemphasis[:] Since

the power spectra of typical modulating signals such as speech and video reduce at higher frequencies, a technique called preemphasis/deemphasis can be used to improve overall performance.”).

Preemphasis has been used for over 70 years for reducing high frequency noise with audio and video signals. *See, e.g.,* B.J. Stevens and E.J. Middleton, “The Relative Merits of Frequency Modulation and Amplitude Modulation as Applied to a Broadcasting Service,” Transactions of the S.A. Institute of Electrical Engineers (May 1947), at 148 (noting that “Frequency modulation further allows the use of pre-emphasis at the transmitter and de-emphasis at the receiver” and comparing proposals for pre-emphasis of high frequencies proposed by “American authorities” and the B.B.C.); William L. Hatton, Pre-Emphasizing Video Signals (MIT Press, 1951), at 1 (“In ordinary FM audio broadcasting, a considerable improvement in signal-to-noise ratio over AM is achieved when a de-emphasis circuit which attenuates the high frequencies after demodulation is used in the receiver. … The possibility of using FM for television signals is being studied. The reason for considering FM video is that it is hoped that some of the interference-reduction properties of FM already observed in audio work can be realized in television, and annoying manifestations of interferences, such as ghosts, can be reduced.”).

Indeed, by the 1990s, preemphasis before recording or broadcasting analog audio or video was the standard for such transmissions, as described in the exemplary manuals and textbooks below:

> Recorded noise
>
> Noise such as hiss, hum and other interference may exist alongside the required analogue audio signal. If the recorded tape is dubbed onto another tape the problem is increased on each recording. Methods of reducing this unwanted portion of the recording include: …

- Pre-emphasis amplifies the high frequency portion of the wanted signals before recording to allow a reduction of high frequencies on replay, reducing high frequency noise whilst leaving the original audio unaffected.

TV Technical Operations, Analogue recording (2000), at 89.

> 4.2.2.1 Video Preemphasis
>
> It is an inherent characteristic of frequency modulation that the thermal noise in the output baseband spectrum increases linearly with frequency. This creates a special problem with NTSC and PAL waveforms because the color subcarrier frequency is in the high-noise region near the top of the baseband. In the absence of corrective measures, the signal-to-noise ratio of the chroma information in the picture would be unsatisfactory. This characteristic also creates a potential problem for the audio circuits although possibly not as severe.
>
> The standard corrective technique is to preemphasize the high-frequency components of the baseband signals at the uplink transmitter and to provide complementary deemphasis at the downlink receiver. Preemphasis is required by the FCC for FM broadcasting and has become a standard technique for satellite transmissions. It produces a major improvement in the signal-to-noise ratio of both audio and video signals.
>
> Since the receiver deemphasis characteristic must be complementary to the preemphasis, an industry standard is required. ***A commonly followed standard for video is ITU-R Recommendation F.405-1***. This specifies approximately 13 dB of preemphasis at 4 MHz as compared with low frequencies (see Table 4.4). This preemphasis characteristic improves the video signal-to-noise ratio by approximately 11 dB; this is sometimes called the deemphasis factor.

Inglis and Luther, Satellite Technology, An Introduction, Second Edition (1997), at 55-56 (emphasis added). As described in the emphasized portion above, the industry followed standards for preemphasis so that receivers from various manufacturers (such as televisions) would know the amount of preemphasis that had been applied, to then be able to deemphasize the signal by the appropriate amount. *See, e.g.,* ITU-R Recommendation F.405-1 ("Pre-emphasis characteristics for frequency modulation radio relay systems for television") (1970). The standardized pre-emphasis curves used for the television standards NTSC (525 line video), PAL (625 lines), and

SECAM (819 lines), is shown below, showing that the high frequencies are emphasized.

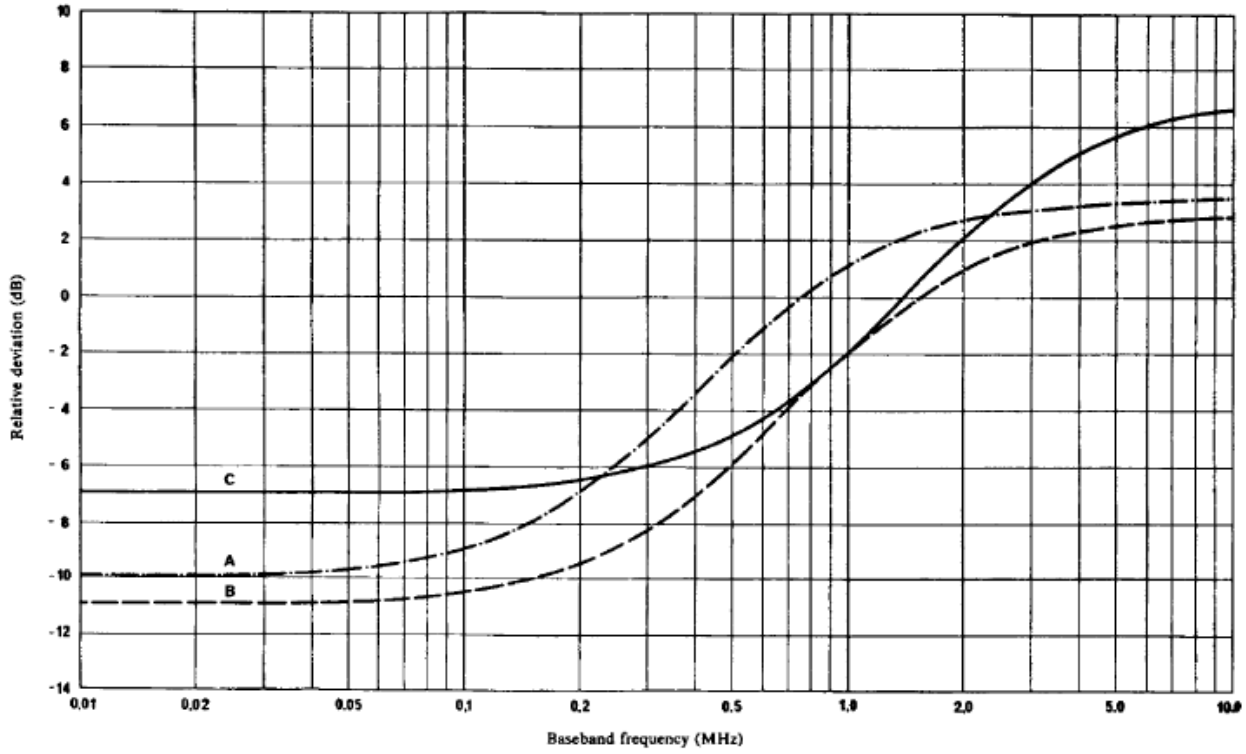

FIGURE 1

Pre-emphasis characteristic for television on 525-, 625-, and 819-line systems

Curve A: 525-line system
B: 625-line system
C: 819-line system

McMahon, "FM Transmission of Video Signals," at 4, Figure 3; *see also* National Association of Broadcaster's Engineering Handbook, at 549-550 ("The standards for FM broadcasting in the U.S. require the use of preemaphsis."). In these standards, the emphasis is applied before the signal is modulated using FM modulation. *Id.* at 550.

As recording and broadcasting moved to digital technologies, preemphasis continued to be widely known for use with digital recording and transmission. For example, as noted in the background of the '128 Patent, the MP3 audio coding standard included a flag in the bit stream to indicate whether an optional preemphasis of the signal was used to encode the audio. '128 Patent, 1:45-50; *see also* https://en.wikipedia.org/wiki/MP3 (showing two-bit flag in the MP3 header

called "emphasis" to indicate whether preemphasis is used). The compact disc standard similarly allowed for optional preemphasis of an input audio signal. Otsuki, et al., "On Compact Disc Tape Masters" (1982) at 3 (describing Q channel data indicating if pre-emphasis is ON or OFF). As in the '128 Patent, after preemphasis, the signal is encoded, in the CD format, using a coding scheme known as pulse code modulation (PCM). The emphasized audio signal to be saved on a CD is sampled, and each sample is quantized to the nearest of the fixed digital step values.

Applying emphasis prior to coding of *video* was also known prior to the '128 Patent. For example, Fukuda taught emphasizing the input video signal before coding either by emphasizing the video signal after it was digitized (Fig. 1 below) or by emphasizing the analog signal before it is digitized by an analog-to-digital converter. (Fig. 12 below).

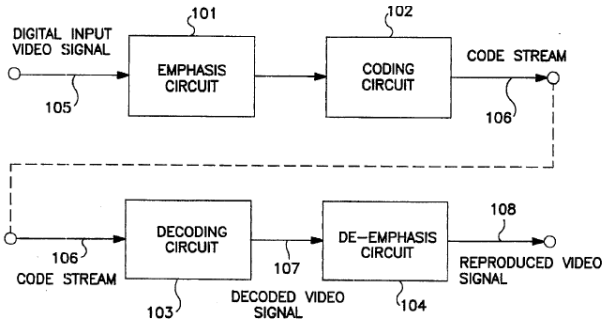

FIG. 1

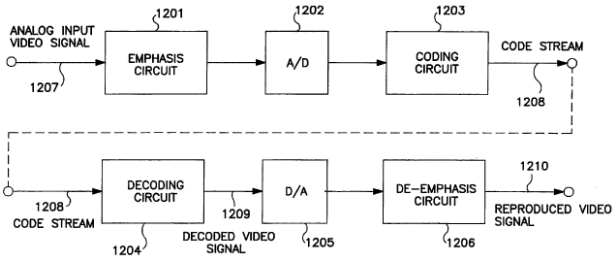

FIG. 12

Fukuda, Figs. 1 and 12. Fukuda explained that coding after emphasizing typically includes dividing the input video into blocks, transforming each block orthogonally, quantizing, and finally variable length coding (e.g., Hufman coding) the signal. *Id.* at 1:16-23. Fukuda describes changing an emphasis mode, which in turn determines the emphasis amount/signal enhancement degree (which could be X1 and K1 in the emphasis circuit). *E.g.*, *id.* at Fig. 2(a)-2(b), 3(a)-3(b), Fig. 6, 11:1-12, 21:8-23, 23:63-66, claims 1-19. The emphasis mode can be changed at the pixel, block, picture, or plurality of picture level. *Id.* at 24:46-53. Fukuda describes the emphasis mode can be determined by various factors: compression rate determined by rate control (*id.* at Fig. 7,

12:42-14:45); activity in the images at a pixel level, block level, picture level, or for a plurality of pictures measured using an Activity Detector (*id.* at Fig. 7, 14:46-15:42); motion in a series of images measured using a Motion Amount Detector (*id.* at Fig. 9, 15:43-44); coding distortion amount – which could be determined by the quantization step size, because a high quantization step size will lead to more coding noise – as measured using a Coding Distortion Measuring Instrument (*id.* at Fig. 10, 16:45-17:50); at block boundaries as measured by a Block Boundary Detector (*id.* at Fig. 11, 17:51-18:27); at image contours as measured by a Contour Detector (Fig. 13, 18:28-63); or other methods such as a combination of these factors. *Id.* at Fig. 14–Fig. 19, 18:65-24:45. Fukuda discloses recording or transmiting the emphasis mode. *E.g.*, *id.* at 23:17-22, 24:15-20. To the extent it is argued that Fukuda does not disclose an emphasis level, Fukuda's extensive disclosure of emphasis amounts and enhancement degree, such as values X1 and K1, that is determined by the mode signal, discloses or at least renders obvious this claim element. To the extent it is argued that Fukuda does not multiplex an emphasis level, Fukuda's disclosures of multiplexing transmitting or recording the mode, which determines the emphasis amount or enhancement degree, discloses or at least renders obvious this claim element. As described below with respect to the Region of Interest and Rate Control references, as an alternative to emphasis prior to coding, portions of a video signal can be emphasized without emphasizing prior to coding, by tuning the quantization parameters for the blocks of an image.

There are significant similarities in subject matter and objectives for each of many references used in these contentions for the '128 Patent.

Region of Interest: For example, charted reference Atsumi (A1), Chai 1997 (A2), Golner 2000 (A5), Krishnamurthy '423 (A10), Sethuranam '124 (A13), and Yang '319 (A17), as well as numerous other references such as Daly 1998, Lee 1996, Menser 2000, and Strom 1996 all include

teachings related to applying differential levels of encoding to different regions within an image. These references provide numerous methods for identifying different regions of interest, as well as different methods for specifying the differential levels of encoding applied to those regions. For example, Chai 1997 teaches segmenting an image into two regions, a foreground (identified using facial recognition techniques) and a background, and applying different quantization step sizes to the two regions. *E.g.,* Chai 1997 at 1448. Daly 1998 also relies on face-based region of interest encoding that calculates a visual sensitivity value for various regions, and then uses that visual sensitivity value for adjusting the quantization for the region. *E.g.,* Daly 1998 at 444-45. Daly 1998 also teaches that rather than transmitting the quantization values themselves, a person of skill in the art could transmit the region of interest information for use by the decoder. *Id*. at 445. Krishnamurthy '423 teaches identifying three regions—foreground, background and a transition region between foreground and background—and selecting quantization levels for each region. *E.g.,* Krishnamurthy '423 at 4:20-46. Sethuranam '124 takes a similar approach, with other adjustments to how quantization is controlled and performed. Those of skill in the art would recognize there are numerous other ways to identify the regions of interest. For example, Atsumi teaches "image compression wherein a region of interest specified by the user is emphasized so that it is encoded with higher fidelity than the rest of the image." Atsumi at 4:55-60. Golner 2000 similarly teaches a user specified approach to identifying the regions of interest. *E.g.,* Golner 2000 at 606. Strom 1996 recognizes there are multiple approaches taken for identifying the region of interest—that can be applied to still and moving images—opting for a user specified approach for its particular application. *E.g.,* Strom 1996 at 157-59. Yang '319 is another reference that recognizes there are multiple ways to identify the regions of interest, that multiple different numbers of regions can be specified, and further provides options for controlling the quality

contrast between the desired and undesired portions of the image. *E.g.,* Yang '319 at 3:50-4:2. A person of skill in the art would understand that the functionality taught in these references could be added to other encoding methods and systems that utilize quantization in order to reduce information loss on the portions of the image that are considered (based on various factors) more important, and/or increase compression on the portions of the image that are considered (based on various factors) less important. These methods provide ways of adjusting or setting quantization levels and would be well understood to work and have predictable results when applied to set an encoder's quantization levels. Moreover, to the extent that any of these references includes a feature not expressly disclosed in one or more other references, a POSITA would have naturally looked to, and been motivated to combine, any one of these references with one or more of the other references in order to better achieve their common goals of improving image quality and perceived image quality.

Rate Control: As another example, charted references Chung '962 (A3), Hui (A8), Masuda (A11), Shimizu '167 (A14), and TM5 (A16), as well as numerous other references such as Aravind '507, Bagni '233, Cheng 1998, and Jass '567 all include teachings related to adjusting quantization levels for portions of an image and/or video signal based on information about the input video signal, the encoding conditions, and/or other factors. For example, Chung '962 and Jass '567 are examples of early disclosures that teach analyzing the input video signal to determine information such as activity level and using that to adjust the quantization level. Chung '962 at 3:32-4:13; Jass '567 at Abstract. This general approach was very well-known prior to the '128 Patent, including being used in codec standards for rate/quantization control. Cheng 1998 at 234-36. TM5 is a another very well-known example of a technique that considers information about the input video signal for adaptive quantization and rate control. While many of these references

used activity level of the input video signal, those of skill in the art recognized that numerous characteristics of the signal could be used for rate/quantization control. For example, Aravind ’507 teaches analyzing other characteristics of the input video signal (such as PNS and psycho-visual quality) and adjusting the quantization step size based on characteristics of the input video signal. Aravind ’507 at Abstract. Moreover, those of skill in the art recognized that the instrumentalities that perform this pre-analysis can be given multiple different names and designations. Shimizu ’167 is an example reference that refers to using detection circuits to detect information about the input video signal. Other references Hui teaches that that both pre-analysis of the image (such as image complexity) and/or encoding conditions (such as selected quality levels) may be used for bit-rate control and quantization parameter selection. Hui at Abstract and Figure 3. Bagni ’233 also recognizes that both pre-analysis of the image and/or encoding conditions may be used for bit-rate control and quantization parameter selection—and recognizes some of the many factors about the input video signal that can be considered. Bagni ’233 at Abstract. A person of skill in the art would understand that the functionality taught in these references could be added to other encoding methods and systems in order to improve rate control and/or bit allocation. These methods provide ways of adjusting or setting quantization levels and would be well understood to work and have predictable results when applied to set an encoder’s quantization levels. Moreover, to the extent that any of these references includes a feature not expressly disclosed in one or more other references, a POSITA would have naturally looked to, and been motivated to combine, any one of these references with one or more of the other references in order to better achieve their common goals of improving image quality and encoding efficiency.

Codecs (Quantization, Encoding, Multiplexing): As another example, H.261, H.261 on

DSP (A6), H.263 (1996), H.263 (1998) (A7), and Sullivan (A15) all include teachings related to codecs that use quantization, encoding, and multiplexing to prepare a bitstream for storage and/or transmission. A person of skill in the art would understand that the functionality taught in these references could be added to other encoding methods and systems in order to have a reliable method and/or system for quantization, encoding, and/or multiplexing of video signals in order to create a bitstream. Moreover, to the extent that any of these references includes a feature not expressly disclosed in one or more other references, a POSITA would have naturally looked to, and been motivated to combine, any one of these references with one or more of the other references in order to better achieve their common goals of improving image quality and encoding efficiency.

Emphasizing Video Signal: As another example, Fujikawa '387, Ito '642, Masuda, Fukuda, and Sato '812 all include teachings related emphasizing a video signal and/or a portion of a video signal (such as the high-frequency portion). Certain limitations in the '128 Patent relate to emphasis levels (setting an emphasis level, emphasizing at the emphasis level, and multiplexing data on the emphasis level), which was well-known from these references and other references in the art. For example, a POSITA would understand that any emphasis is performed at a particular level, which may be defined by a particular emphasis amount or a placeholder (such as a mode in Fukuda) that in turn defines an emphasis amount. A POSITA would further understand that any such emphasis level must be in the created bits in some form so that the decoded video can deemphasized to obtain the original signal. A POSITA would understand that not having and recording a specific emphasis level will lead to inaccurate signals at playback. A person of skill in the art would understand that the functionality taught in these references could be added to other encoding methods and systems in order improve noise reduction and/or improve image quality.

Moreover, to the extent that any of these references includes a feature not expressly disclosed in one or more other references, a POSITA would have naturally looked to, and been motivated to combine, any one of these references with one or more of the other references in order to better achieve their common goals of improving noise reduction and image quality.

Multiplexing: As another example, Fukuda discloses multiplexing a video bitstream with data on the emphasis levels. A POSITA would understand that an encoded bitstream that exists at the output of a codec can be multiplexed with other data, as necessary, such as data on the emphasis level. For example, it was well known that coded video streams can be included in containers that allow additional data regarding the video. For example, the XMP standard for embedding metadata allows for including any kind of metadata into other file formats, including video formats. A person of skill in the art would understand that the functionality taught in these references could be added to other encoding methods and systems in order improve inform the playback or receiving system of the amount of emphasis applied, as required to retrieve the original video signal. Moreover, to the extent that any of these references includes a feature not expressly disclosed in one or more other references, a POSITA would have naturally looked to, and been motivated to combine, any one of these references with one or more of the other references in order to better achieve their common goals of reducing noise in coding the input signal.

In addition to the specific examples provided above, Defendants reserve the right to rely on the disclosures of the references listed in Appendix A for additional motivation to combine. These examples of combinations are given merely to illustrate various motivations to combine and are not intended to provide an exhaustive list of every possible combination to which the motivation may apply. Defendants reserve the right to contend that the motivations to combine provided herein apply to other combinations at the appropriate time, e.g., in expert reports

regarding invalidity. To the extent one or more of identified combinations is posed as a combination of only two references, it does not indicate that the two references that are being combined for one purpose could not be joined by a third reference (or more additional references) whose combination serves the same or a different purpose. Indeed, many of the features recited in the asserted claims are componentized features/functions whereby the feature could be implemented using teachings from another source while not interfering with additional features. For that reason, a POSITA may have reasonably looked to and been motivated to combine three or more references in order to achieve a specific outcome.

b. Combinations

For at least the reasons described above, it would have been obvious to one of ordinary skill in the art to combine each prior art reference listed in Appendix A with any other reference or references listed in Appendix A along with the knowledge of one of ordinary skill in the art to arrive at the inventions claims in the ’128 Patent.

For example, and without limitation, the Asserted Claims of the ’128 Patent would have been obvious to one of ordinary skill in the art in view of the following combinations:

(i) <u>Region of Interest References Combined with Codec References: Atsumi (A1), Chai 1997 (A2), Golner 2000 (A5), Krishnamurthy ’423 (A10), Sethuranam ’124 (A13), and Yang ’319 (A17) (as well as Daly 1998, Lee 1996, Menser 2000, and Strom 1996) in combination with H.261, H.261 on DSP (A6), H.263 (1996), H.263 (1998) (A7), Sullivan (A15), Fukuda (A18), TMS320C80 (A19), and FFmpeg (A20)</u>

A POSITA would have had reason to combine Atsumi (A1), Chai 1997 (A2), Golner 2000 (A5), Krishnamurthy ’423 (A10), Sethuranam ’124 (A13), and Yang ’319 (A17) (as well as Daly 1998, Lee 1996, Menser 2000, and Strom 1996) with any one of H.261, H.261 on DSP (A6), H.263 (1996), H.263 (1998) (A7), Sullivan (A15), Fukuda (A18), TMS320C80 (A19), and

FFmpeg (A20) all of which relate to systems and methods for encoding images. Each of Atsumi (A1), Chai 1997 (A2), Golner 2000 (A5), Krishnamurthy ’423 (A10), Sethuranam ’124 (A13), and Yang ’319 (A17) (as well as Daly 1998, Lee 1996, Menser 2000, and Strom 1996)) concern to applying differential levels of encoding to different regions within an image. Indeed, such processes were conventional as of the time these references were known. Each of H.261, H.261 on DSP (A6), H.263 (1996), H.263 (1998) (A7), Sullivan (A15), Fukuda (A18), TMS320C80 (A19), and FFmpeg (A20) provide means—not necessarily expressly present in all other references—for quantizing, variable length encoding, and multiplexing a bitstream. A POSITA would have understood that the systems and methods for applying differential levels of encoding and/or quantization to different regions within an image (such as those taught in Atsumi (A1), Chai 1997 (A2), Golner 2000 (A5), Krishnamurthy ’423 (A10), Sethuranam ’124 (A13), and Yang ’319 (A17) (as well as Daly 1998, Lee 1996, Menser 2000, and Strom 1996)) were intended to be incorporated into a larger codec. A POSITA would understand that systems and methods for applying differential levels of encoding and/or quantization provide an improvement that can be used to improve the lossy portion of a compression process, and that improvements to that aspect of the process could be used in numerous different overall codecs that perform the common steps prior to and after lossy compression. A POSITA wold further understand that in order to implement a full codec, the systems and methods for applying differential levels of encoding and/or quantization would commonly be combined with other traditional encoding steps such as, but not limited to, transformation and entropy encoding (such as variable length encoding). Given that H.261, H.261 on DSP (A6), H.263 (1996), H.263 (1998) (A7), Sullivan (A15), Fukuda (A18), TMS320C80 (A19), and FFmpeg (A20) describe well-known codec functionality (including quantization, variable length encoding, and multiplexing) used for

preparing a video bitstream for transmission and/or storage, a POSITA would have been motivated to combine the teachings of these references. The combination would apply known techniques to apply differential levels of encoding and/or quantization to different regions of an image, to codec systems and methods that were ready for improvement, in order to yield predictable results. The combination would further be "obvious to try," because it would involve simple design choices from a finite number of identified, predictable solutions, with a reasonable expectation of success.

(ii) Rate Control References Combined with Codec References: Chung '962 (A3), Hui (A8), Masuda (A11), Shimizu '167 (A14), and TM5 (A16) (as well as Aravind '507, Bagni '233, Cheng 1998, and Jass '567) in combination with H.261, H.261 on DSP (A6), H.263 (1996), H.263 (1998) (A7), Sullivan (A15), Fukuda (A18), TMS320C80 (A19), and FFmpeg (A20)

A POSITA would have had reason to combine Chung '962 (A3), Hui (A8), Masuda (A11), Shimizu '167 (A14), and TM5 (A16) (as well as Aravind '507, Bagni '233, Cheng 1998, and Jass '567) all of which relate to systems and methods for encoding images. Each of Chung '962 (A3), Hui (A8), Masuda (A11), Shimizu '167 (A14), and TM5 (A16) (as well as Aravind '507, Bagni '233, Cheng 1998, and Jass '567) concern adjusting quantization levels for portions of an image and/or video signal based on information about the input video signal, the encoding conditions, and/or other factors. These references can be used for improved rate control, improved encoding efficiency, and/or improved image quality. Systems and methods such as those described in these references were conventional as of the time of the earliest alleged priority of the '128 Patent. Each of H.261, H.261 on DSP (A6), H.263 (1996), H.263 (1998) (A7), Sullivan (A15), Fukuda (A18), TMS320C80 (A19), and FFmpeg (A20) provide means—not necessarily expressly present in all other references—for quantizing, variable length encoding, and multiplexing a bitstream. A POSITA would have understood that rate control and/or quantization control systems and methods

(such as those taught in Chung ’962 (A3), Hui (A8), Masuda (A11), Shimizu ’167 (A14), and TM5 (A16) (as well as Aravind ’507, Bagni ’233, Cheng 1998, and Jass ’567)) were intended to be incorporated into a larger codec. A POSITA would understand that these rate control and/or quantization control systems and methods provide an improvement that can be used to improve the lossy portion of a compression process, and that improvements to that aspect of the process could be used in numerous different overall codecs that perform the common steps prior to and after lossy compression. A POSITA would further understand that in order to implement a full codec, rate control and/or quantization control systems and methods would commonly be combined with other traditional encoding steps such as, but not limited to, transformation and entropy encoding (such as variable length encoding). Given that H.261, H.261 on DSP (A6), H.263 (1996), H.263 (1998) (A7), Sullivan (A15), Fukuda (A18), TMS320C80 (A19), and FFmpeg (A20) describe well-known codec functionality (including quantization, variable length encoding, and multiplexing) used for preparing a video bitstream for transmission and/or storage, a POSITA would have been motivated to combine the teachings of these references. The combination would apply known techniques for rate control and quantization control, to codec systems and methods that were ready for improvement, in order to yield predictable results. The combination would further be “obvious to try,” because it would involve simple design choices from a finite number of identified, predictable solutions, with a reasonable expectation of success.

(iii) Region of Interested Combined with Rate Control References, and further Combined with Codec References:

In order to obtain the benefits of both the region of interest references and the rate control references, a person of skill in the art would have been motivated to combine the teachings of these references within a single codec. The systems and methods in these references are readily combinable. For example, a POSITA would understand that the region of interest references

provide the ability to select the overall quantization value for a region, the rate control references provide the ability to made adjustments to the quantization levels for smaller portions of that region in response to information about the input video signal, the encoding conditions, and/or other factors. Combining these references would allow a POSITA to control the portions of the image that receive relatively more or less lossy compression, and to adjust the overall amount of lossy compression to satisfy rate control demands. A POSITA would have been motivated to combine the teachings of these to not only obtain the benefits of differentiating between different regions within an image, but also to improve coding efficiency and image quality within the regions. The combination of these references would apply known techniques for (i) region of interested encoding and (ii) rate control and quantization control, to codec systems and methods that were ready for improvement, in order to yield predictable results. The combination would further be "obvious to try," because it would involve simple design choices from a finite number of identified, predictable solutions, with a reasonable expectation of success.

c. Additional Combinations

For at least the reasons described above, it would have been obvious to one of ordinary skill in the art to combine each prior art reference listed in Appendix A with any other reference or references listed in Appendix A along with the knowledge of one of ordinary skill in the art to arrive at the inventions claims in the '128 Patent.[14] For example, and without limitation, the Asserted Claims of the '128 Patent would have been obvious to one of ordinary skill in the art in view of the following combinations:

[14] Further, Defendants are actively searching for information regarding at least the systems, devices, and/or inventions listed above in Table 2-A. It would have been obvious to one of ordinary skill in the art to combine each of the prior art references listed in Appendix A with any of the systems identified in Table 2-A. Defendants reserve the right to supplement or amend these contentions as discovery progresses, to the extent permitted by the Court.

Patent No. or Title (Primary Inventor/Author)	In Combination with One or More of: (Patent No. or Title (Primary Inventor/Author))
Atsumi[15]	• Chai 1997 • Chung • Fujikawa • Golner • H.261 on DSP • H.263 1998 • Hui • Ito • Krishnamurthy • Masuda • Sato • Sethuraman • Shimizu • Sullivan • TM5 • Yang • Fukuda • TMS320C80 • FFmpeg • The knowledge of a person of ordinary skill in the art.
Chai 1997	• Atsumi • Chung • Fujikawa • Golner • H.261 on DSP • H.263 1998 • Hui • Ito • Krishnamurthy • Masuda • Sato • Sethuraman • Shimizu • Sullivan • TM5 • Yang • Fukuda • TMS320C80

[15] Defendants are providing notice of their intent to rely on each invalidity ground presented in IPR2024-00062, including Ground 2 that Atsumi renders Claims 1-6 and 8 obvious.

Patent No. or Title (Primary Inventor/Author)	In Combination with One or More of: (Patent No. or Title (Primary Inventor/Author))
	• FFmpeg • The knowledge of a person of ordinary skill in the art.
Chung	• Atsumi • Chai 1997 • Fujikawa • Golner • H.261 on DSP • H.263 1998 • Hui • Ito • Krishnamurthy • Masuda • Sato • Sethuraman • Shimizu • Sullivan • TM5 • Yang • Fukuda • TMS320C80 • FFmpeg • The knowledge of a person of ordinary skill in the art.
Fujikawa[16]	• Atsumi • Chai 1997 • Chung • Golner • H.261 on DSP • H.263 1998 • Hui • Ito • Krishnamurthy • Masuda • Sato • Sethuraman • Shimizu • Sullivan • TM5

[16] Defendants are providing notice of their intent to rely on each invalidity ground presented in IPR2024-00062, including Ground 1B that Fukuda in view of Fujikawa renders Claims 1-4 obvious.

Patent No. or Title (Primary Inventor/Author)	In Combination with One or More of: (Patent No. or Title (Primary Inventor/Author))
	• Yang • Fukuda • TMS320C80 • FFmpeg • The knowledge of a person of ordinary skill in the art.
Golner	• Atsumi • Chai 1997 • Chung • Fujikawa • H.261 on DSP • H.263 1998 • Hui • Ito • Krishnamurthy • Masuda • Sato • Sethuraman • Shimizu • Sullivan • TM5 • Yang • Fukuda • TMS320C80 • FFmpeg • of a person of ordinary skill in the art.
H.261 on DSP	• Atsumi • Chai 1997 • Chung • Fujikawa • Golner • H.263 1998 • Hui • Ito • Krishnamurthy • Masuda • Sato • Sethuraman • Shimizu • Sullivan • TM5 • Yang

Patent No. or Title (Primary Inventor/Author)	In Combination with One or More of: (Patent No. or Title (Primary Inventor/Author))
	• Fukuda • TMS320C80 • FFmpeg • The knowledge of a person of ordinary skill in the art.
H.263 1998	• Atsumi • Chai 1997 • Chung • Fujikawa • Golner • H.261 on DSP • Hui • Ito • Krishnamurthy • Masuda • Sato • Sethuraman • Shimizu • Sullivan • TM5 • Yang • Fukuda • TMS320C80 • FFmpeg • The knowledge of a person of ordinary skill in the art.
Hui	• Atsumi • Chai 1997 • Chung • Fujikawa • Golner • H.261 on DSP • H.263 1998 • Ito • Krishnamurthy • Masuda • Sato • Sethuraman • Shimizu • Sullivan • TM5 • Yang • Fukuda

Patent No. or Title (Primary Inventor/Author)	In Combination with One or More of: (Patent No. or Title (Primary Inventor/Author))
	• TMS320C80 • FFmpeg • The knowledge of a person of ordinary skill in the art.
Ito	• Atsumi • Chai 1997 • Chung • Fujikawa • Golner • H.261 on DSP • H.263 1998 • Hui • Krishnamurthy • Masuda • Sato • Sethuraman • Shimizu • Sullivan • TM5 • Yang • Fukuda • TMS320C80 • FFmpeg • The knowledge of a person of ordinary skill in the art.
Krishnamurthy	• Atsumi • Chai 1997 • Chung • Fujikawa • Golner • H.261 on DSP • H.263 1998 • Hui • Ito • Masuda • Sato • Sethuraman • Shimizu • Sullivan • TM5 • Yang • Fukuda • TMS320C80

Patent No. or Title (Primary Inventor/Author)	In Combination with One or More of: (Patent No. or Title (Primary Inventor/Author))
	• FFmpeg • The knowledge of a person of ordinary skill in the art.
Masuda	• Atsumi • Chai 1997 • Chung • Fujikawa • Golner • H.261 on DSP • H.263 1998 • Hui • Ito • Krishnamurthy • Sato • Sethuraman • Shimizu • Sullivan • TM5 • Yang • Fukuda • TMS320C80 • FFmpeg • The knowledge of a person of ordinary skill in the art.
Sato	• Atsumi • Chai 1997 • Chung • Fujikawa • Golner • H.261 on DSP • H.263 1998 • Hui • Ito • Krishnamurthy • Masuda • Sethuraman • Shimizu • Sullivan • TM5 • Yang • Fukuda • TMS320C80 • FFmpeg

Patent No. or Title (Primary Inventor/Author)	In Combination with One or More of: (Patent No. or Title (Primary Inventor/Author))
	• The knowledge of a person of ordinary skill in the art.
Sethuraman	• Atsumi • Chai 1997 • Chung • Fujikawa • Golner • H.261 on DSP • H.263 1998 • Hui • Ito • Krishnamurthy • Masuda • Sato • Shimizu • Sullivan • TM5 • Yang • Fukuda • TMS320C80 • FFmpeg • The knowledge of a person of ordinary skill in the art.
Shimizu	• Atsumi • Chai 1997 • Chung • Fujikawa • Golner • H.261 on DSP • H.263 1998 • Hui • Ito • Krishnamurthy • Masuda • Sato • Sethuraman • Sullivan • TM5 • Yang • Fukuda • TMS320C80 • FFmpeg • The knowledge of a person of ordinary skill in the art.

Patent No. or Title (Primary Inventor/Author)	In Combination with One or More of: (Patent No. or Title (Primary Inventor/Author))
Sullivan	• Atsumi • Chai 1997 • Chung • Fujikawa • Golner • H.261 on DSP • H.263 1998 • Hui • Ito • Krishnamurthy • Masuda • Sato • Sethuraman • Shimizu • TM5 • Yang • Fukuda • TMS320C80 • FFmpeg • The knowledge of a person of ordinary skill in the art.
TM5	• Atsumi • Chai 1997 • Chung • Fujikawa • Golner • H.261 on DSP • H.263 1998 • Hui • Ito • Krishnamurthy • Masuda • Sato • Sethuraman • Shimizu • Sullivan • Yang • Fukuda • TMS320C80 • FFmpeg • The knowledge of a person of ordinary skill in the art.
Yang	• Atsumi

Patent No. or Title (Primary Inventor/Author)	In Combination with One or More of: (Patent No. or Title (Primary Inventor/Author))
	• Chai 1997 • Chung • Fujikawa • Golner • H.261 on DSP • H.263 1998 • Hui • Ito • Krishnamurthy • Masuda • Sato • Sethuraman • Shimizu • Sullivan • TM5 • Fukuda • TMS320C80 • FFmpeg • The knowledge of a person of ordinary skill in the art.
Fukuda[17]	• Atsumi • Chai 1997 • Chung • Fujikawa • Golner • H.261 on DSP • H.263 1998 • Hui • Ito • Krishnamurthy • Masuda • Sato • Sethuraman • Shimizu • Sullivan • TM5 • Yang • TMS320C80

[17] Defendants are providing notice of their intent to rely on each invalidity ground presented in IPR2024-00062, including Ground 1A that Fukuda renders Claims 1-6 and 8 obvious and Ground 1B that Fukuda in view of Fujikawa renders Claims 1-4 obvious.

Patent No. or Title (Primary Inventor/Author)	In Combination with One or More of: (Patent No. or Title (Primary Inventor/Author))
	• FFmpeg • The knowledge of a person of ordinary skill in the art.
TMS320C80	• Atsumi • Chai 1997 • Chung • Fujikawa • Golner • H.261 on DSP • H.263 1998 • Hui • Ito • Krishnamurthy • Masuda • Sato • Sethuraman • Shimizu • Sullivan • TM5 • Yang • Fukuda • FFmpeg • The knowledge of a person of ordinary skill in the art.
FFmpeg	• Atsumi • Chai 1997 • Chung • Fujikawa • Golner • H.261 on DSP • H.263 1998 • Hui • Ito • Krishnamurthy • Masuda • Sato • Sethuraman • Shimizu • Sullivan • TM5 • Yang • Fukuda • TMS320C80

Patent No. or Title (Primary Inventor/Author)	In Combination with One or More of: (Patent No. or Title (Primary Inventor/Author))
	• The knowledge of a person of ordinary skill in the art.
IPR2024-00062 Petition	• Ground 1A: Fukuda • Ground 1B: Fukuda in view of Fujikawa • Ground 2: Atsumi

As mentioned above, Defendants have not yet completed their search or discovery concerning additional prior art. Moreover, the exemplary combinations are provided based on Defendants' current understanding of the Asserted Claims and Plaintiff's apparent view of the scope of those claims as shown, for example, in Plaintiff's Infringement Contentions. Further, a *Markman* Order has not yet been issued in this case. As such, Defendants' inclusion of exemplary combinations does not preclude them from identifying other invalidating combinations as appropriate, and Defendants reserve the right to identify additional specific combinations as well as to detail and explain such combinations.

2. U.S. Patent No. 8,090,025

Pursuant to P.R. 3-3(a) and (b), Defendants identify in Appendix B the prior art references that render obvious the Asserted Claims of the '025 Patent and include below exemplary combinations showing the obviousness of the '025 Patent Asserted Claims in view of the prior art. To the extent Plaintiff contends that an element is not disclosed in any one of the anticipatory references described in Appendix B, the limitation would have been obvious in light of the disclosures within the reference and the knowledge of one of ordinary skill in the art at the time of the '025 Patent. Moreover, to the extent Plaintiff contends that an element is not disclosed in any one of the anticipatory references described in Appendix B, such reference may be combined with any other references listed in Appendix B for such element, thereby rendering the claims invalid for obviousness. To the extent a finder of fact determines that a limitation of any of the '025 Patent

Asserted Claims is not disclosed by one of the references identified above pursuant to P.R. 3-3(a), the claim is nevertheless unpatentable as obvious because they contain nothing that constitutes a patentable innovation. To the extent a finder of fact determines that a limitation of the '025 Patent Asserted Claims is not anticipated, it does not go beyond combining familiar elements according to known methods to achieve predictable results or does more than choose between clear alternatives known to those of ordinary skill in the art.

a. Obviousness Rationale and Motivations to Combine

Obviousness: For at least the reasons described in these contentions, it would have been obvious to one of ordinary skill in the art to combine any of a number of prior art references, including any combination of those prior art references identified in Appendix B along with the knowledge of one of ordinary skill in the art to meet the limitations of the '025 Patent Asserted Claims. As a result, the references identified herein render one or more Asserted Claims of the '025 Patent obvious when the references are read in combination with each other, and/or when read in view of the state of the art and knowledge of those skilled in the art. Each and every reference identified is also relevant to the state of the art at the time of the alleged invention. Any of the references disclosed above may be combined with one another to render obvious (and therefore invalid) each of ACT's Asserted Claims. Defendants may rely upon a subset of the identified references or all of the references identified herein, including all references in Appendix B, for purposes of obviousness depending on the Court's claim construction, positions taken by ACT during this litigation, and further investigation and discovery.

Reservation of Rights: Moreover, as mentioned above, Defendants have not yet completed their search or discovery concerning additional prior art. As such, Defendants' inclusion of exemplary combinations does not preclude them from identifying other invalidating

combinations as appropriate, and Defendants reserve the right to identify additional specific combinations as well as to detail and explain such combinations.

No More Than Ordinary Variations of Prior Art; No Unexpected Results: To the extent not anticipated, the '025 Patent Asserted Claims represent no more than the result of ordinary variations of the prior art. Defendants further believe that no showing of a specific motivation to combine prior art is required to combine the references disclosed above and in the attached charts, as each combination of art would have no unexpected results, and at most would simply represent a known alternative to one of ordinary skill in the art. *See KSR Int'l Co. v. Teleflex, Inc.*, 550 U.S. 398, 415-16 (2007) (rejecting the Federal Circuit's "rigid" application of the teaching, suggestion, or motivation to combine test, instead espousing an "expansive and flexible" approach); *Apple Inc. v. Samsung Elecs. Co*., 839 F.3d 1034, 1058 (Fed. Cir. 2016); *Intercontinental Great Brands LLC v. Kellogg N. Am. Co*., 869 F.3d 1336, 1344 (Fed. Cir. 2017). Indeed, the Supreme Court held that a person of ordinary skill in the art is "a person of ordinary creativity, not an automaton" and "in many cases a person of ordinary skill in the art will be able to fit the teachings of multiple patents together like pieces of a puzzle." *Id.* at 420-21. Nevertheless, in addition to the information contained elsewhere in these contentions, Defendants identify motivation and reason to combine the cited art.

Predictable Results; Obvious to Try: One or more combinations of the prior art references identified in Appendix B would have been obvious because these references would have been combined using: known methods to yield predictable results; known techniques in the same way; a simple substitution of one known, equivalent element for another to obtain predictable results; and/or a teaching, suggestion, or motivation in the prior art generally. In addition, it would have been obvious to try combining the prior art references identified above because there were

only a finite number of predictable solutions and/or because known work in one field of endeavor prompted variations based on predictable design incentives and/or market forces either in the same field or a different one. Further, the combinations of the prior art references identified in Appendix B would have been obvious because the combinations represent known potential options with a reasonable expectation of success.

Interrelated Teachings: Additional evidence that there would have been a motivation to combine the prior art references identified above includes the interrelated teachings of multiple prior art references; common authorship; the effects of demands known to the design community or present in the marketplace; the existence of a known problem for which there was an obvious solution encompassed by the '025 Patent Asserted Claims; the existence of a known need or problem in the field of the endeavor at the time of the alleged invention(s); and the background knowledge that would have been possessed by a person having ordinary skill in the art.

Summary of Motivations to Combine: Thus, the motivation to combine the teachings of the prior art references disclosed in Appendix B is found in the references themselves and also in: (1) the nature of the problem being solved; (2) the express, implied and inherent teachings of the prior art; (3) the knowledge of persons of ordinary skill in the art; (4) the predictable results obtained in combining the different elements of the prior art; (5) the predictable results obtained in simple substitution of one known element for another; (6) the use of a known technique to improve similar devices, methods, or products in the same way; (7) the predictable results obtained in applying a known technique to a known device, method, or product ready for improvement; (8) the finite number of identified predictable solutions that had a reasonable expectation of success; and (9) known work in various technological fields that could be applied to the same or different technological fields based on design incentives or other market forces.

Same Area of Technology: Additionally, it would be obvious to one of ordinary skill in the art to consult and/or combine any of the prior art listed in Appendix B because all of these references relate to the same area of technology and/or are from analogous art. The ’025 Patent Asserted Claims are directed to decoding video using motion compensation. *See, e.g.*, ’025 Patent at Abstract; 2:39-44. The ’025 Patent Asserted Claims merely unite old elements, well known in the field, with no change in their respective function or result. Given the interrelated teachings of the prior art, the effects of demands known to the design community or present in the marketplace, and the background knowledge possessed by a person having ordinary skill in the art, it would have been obvious for one of ordinary skill in the art to combine these familiar elements, disclosed and/or embodied in the prior art listed above to practice the ’025 Patent Asserted Claims.

Same Technical Issues: A person of ordinary skill would have been motivated to combine the above prior art based on his/her knowledge, the nature of the problem to be solved, and the teachings of the prior art. The identified prior art addresses the same or similar technical issues and suggests the same or similar solutions to those issues. Moreover, some of the prior art refer to or discuss other prior art, illustrating the close technical relationship among the prior art. For the ’025 Patent, one of ordinary skill in the art would have been motivated to combine known prior art solutions described in these references relating to video encoding and/or decoding techniques and systems and known features related thereto.

Demand and Market Forces: For example, market forces suggested a demand for efficient techniques for encoding and decoding media, and thus one of skill in the art would have thought to combine or modify references that described known methods that one of skill in the art would have recognized as offering improvements to solutions of that time.

Known Elements; Obvious to Try: Moreover, many of the claim elements were already

known as admitted by the applicants in the patent specification. These elements represented design choices available to a person of ordinary skill. When there is a design need or market pressure to solve a problem such as identified previously and/or described in the ’025 Patent, and there are a finite number of identified, predictable solutions, a person of ordinary skill would be motivated to combine the known options that are within his or her technical grasp. For the ’025 Patent, there are a finite number of approaches for decoding media using motion compensation. For example, as of the priority date of the ’025 Patent, a POSITA would have been very familiar with basic elements of the ’025 Patent’s claims such as demultiplexing coded data, entropy decoding, inverse quantization, inverse-orthogonal transformation, motion compensation techniques, defining conditions that satisfy Poisson’s equation, etc. Such elements were within the knowledge of a POSITA, whether or not disclosed in any particular reference, and the inclusion of such elements in the ’025 Patent’s claims does not render them novel or non-obvious.

In addition to the specific examples provided above, Defendants reserve the right to rely on the disclosures of the references listed in Appendix B for additional motivation to combine. These examples of combinations are given merely to illustrate various motivations to combine and are not intended to provide an exhaustive list of every possible combination to which the motivation may apply. Defendants reserve the right to contend that the motivations to combine provided herein apply to other combinations at the appropriate time, e.g., in expert reports regarding invalidity. To the extent one or more of identified combinations is posed as a combination of only two references, it does not indicate that the two references that are being combined for one purpose could not be joined by a third reference (or more additional references) whose combination serves the same or a different purpose. Indeed, many of the features recited in the asserted claims are componentized features/functions whereby the feature could be

implemented using teachings from another source while not interfering with additional features. For that reason, a POSITA may have reasonably looked to and been motivated to combine three or more references in order to achieve a specific outcome.

b. Combinations

For at least the reasons described above, it would have been obvious to one of ordinary skill in the art to combine each prior art reference listed in Appendix B with any other reference or references listed in Appendix B along with the knowledge of one of ordinary skill in the art to arrive at the inventions claims in the ’025 Patent.

For example, and without limitation, the Asserted Claims of the ’025 Patent would have been obvious to one of ordinary skill in the art in view of the following combinations:

(i) <u>Decoder References Combined with Signal Estimation References: Ahmad (B1), Jung (B3), Kim 700 (B4), Maeda (B7), Sekiguchi (B10), Miyamoto (B8), Jung 207 (B23), Tian (B24) in combination with Yamatani (B13), Saito (B14), Lee 725 (B12), Mualla (B27), and Shirani (B28)</u>

A POSITA would have had reason to combine Ahmad (B1), Jung (B3), Kim 700 (B4), Maeda (B7), Sekiguchi (B10), Miyamoto (B8), Jung 207 (B23), Tian (B24) with any one of Yamatani (B13), Saito (B14), Lee 725 (B12), Mualla (B27), and Shirani (B28) all of which relate to video encoding and/or decoding techniques and systems and known features related thereto. Each of Ahmad (B1), Jung (B3), Kim 700 (B4), Maeda (B7), Sekiguchi (B10), Miyamoto (B8), Jung 207 (B23), and Tian (B24) concerns media encoding and/or decoding systems and methods. Indeed, such systems were conventional as of the time these references were known. Each of Yamatani (B13), Saito (B14), Lee 725 (B12), Mualla (B27), and Shirani (B28) provides means—not necessarily expressly present in all other references—for using known mathematical techniques such as Polyharmonic Local Cosine Transform (PHLCT) and/or Poisson’s Equation for signal and/or estimation. A POSITA would have been motivated to combine the teachings of

these references because the Decoder References recognize the importance of removing or avoiding discontinuities at block boundaries, e.g., Sekiguchi at ¶ 15 ("when coding is carried out with a high compression ratio, a satisfactory rendition of the residual signal is not possible and the discontinuous boundaries are sometimes apparent and perceived as distortion"), and the Signal Estimation References teach known techniques to estimate signals and/or motion between boundaries, e.g., Saito at 4 ("Want to improve the quality of images (e.g., less blocking artifacts / visible discontinuities between blocks) reconstructed from the low bit rate JPEG files."), Lee 725 at ¶ 60 ("the present invention performs motion determination on a block-by-block basis during inter-screen encoding of a video, but does not obtain a motion vector as in the prior art, but only determines motion using pixel values at block boundaries, thereby obtaining a motion vector"); *id.* at Abstract, ¶¶ 26, 28, 31, 49. Additional references demonstrating well-known techniques for removing or avoiding discontinuities at block boundaries and estimating signals between boundaries include Nogaki, Averbuch, Braverman, Orchard, Zhao-Saito-Yamatani. The combination would apply known techniques in order to yield predictable results. The combination would further be "obvious to try," because it would involve simple design choices from a finite number of identified, predictable solutions, with a reasonable expectation of success.

(ii) <u>Decoder References Combined with Codec References: Ahmad (B1), Jung (B3), Kim 700 (B4), Maeda (B7), Sekiguchi (B10), Miyamoto (B8), Jung 207 (B23), Tian (B24) (as well as Lee 896 and Woods) in combination with MPEG-4 1999 (B9), H.264 2003 (B5, B11) (as well as H.263 2005)</u>

A POSITA would have had reason to combine Ahmad (B1), Jung (B3), Kim 700 (B4), Maeda (B7), Sekiguchi (B10), Miyamoto (B8), Jung 207 (B23), Tian (B24) (as well as Lee 896 and Woods) with any one of MPEG-4 1999 (B9) and H.264 2003 (B5, B11) (as well as H.263 2005), all of which relate to video encoding and/or decoding techniques and systems and known

features related thereto. Each of Ahmad (B1), Jung (B3), Kim 700 (B4), Maeda (B7), Sekiguchi (B10), Miyamoto (B8), Jung 207 (B23), and Tian (B24) (as well as Lee 896 and Woods) concerns media encoding and/or decoding systems and methods. Indeed, such systems were conventional as of the time these references were known. Each of MPEG-4 1999 (B9) and H.264 2003 (B5, B11) (as well as H.263 2005) provides known techniques—not necessarily expressly present in all other references—such as quantizing, variable length encoding, multiplexing, and motion compensation. A POSITA would have understood that the teachings of the Decoder References, such as those in Ahmad (B1), Jung (B3), Kim 700 (B4), Maeda (B7), Sekiguchi (B10), Miyamoto (B8), Jung 207 (B23), Tian (B24) (as well as Lee 896 and Woods), were intended to be incorporated into a larger codec. Given that MPEG-4 1999, H.263 1999, and H.264 2003 describe well-known codec functionality used for encoding a bitsteam, a POSITA would have been motivated to combine the teachings of these references. The combination would apply known techniques in order to yield predictable results. The combination would further be "obvious to try," because it would involve simple design choices from a finite number of identified, predictable solutions, with a reasonable expectation of success.

(iii) Decoder References Combined with Signal Estimation References, and Further Combined with Codec References:

In order to obtain the benefits of both the Decoder References and the Signal Estimation References, a person of skill in the art would have been motivated to combine the teachings of these references within a single codec, such as one or more of the Codec References. The systems and methods in these references are readily combinable. For example, as explained above, a POSITA would understand that the Decoder References teach known video encoding and/or decoding techniques and systems and known features related thereto; the Codec References teach, e.g., known motion compensation techniques (including for example the overlapped block motion

compensation functionality that is accused of infringement); and the Signal Estimation References teach known mathematical methods to estimate signals between boundaries (such as when applied to motion compensation). A POSITA would have been motivated to combine the teachings of these references for efficient transmission of high-fidelity media that mitigates blocking artifacts and/or visible discontinuities. The combination of these references would apply known techniques to codec systems and methods that were ready for improvement, in order to yield predictable results. The combination would further be "obvious to try," because it would involve simple design choices from a finite number of identified, predictable solutions, with a reasonable expectation of success.

c. Additional Combinations

For at least the reasons described above, it would have been obvious to one of ordinary skill in the art to combine each prior art reference listed in Appendix B with any other reference or references listed in Appendix B along with the knowledge of one of ordinary skill in the art to arrive at the inventions claims in the '025 Patent.[18] For example, and without limitation, the Asserted Claims of the '025 Patent would have been obvious to one of ordinary skill in the art in view of the following combinations:

Patent No. or Title (Primary Inventor/Author)	In Combination with One or More of: (Patent No. or Title (Primary Inventor/Author))
Ahmad	• Jung • Maeda • Sekiguchi • Miyamoto • Tian

[18] Further, Defendants are actively searching for information regarding at least the systems, devices, and/or inventions listed above in Table 2-B. It would have been obvious to one of ordinary skill in the art to combine each of the prior art references listed in Appendix B with any of the systems identified in Table 2-B. Defendants reserve the right to supplement or amend these contentions as discovery progresses, to the extent permitted by the Court.

Patent No. or Title (Primary Inventor/Author)	In Combination with One or More of: (Patent No. or Title (Primary Inventor/Author))
	• Jung 207 • Yamatani • Saito • Mualla • Shirani • McWaid • H.263 2005 • MPEG-4 1999 • H.264 2003 • Lee 896 • Woods • Chujoh • Kim • Lee 982 • Lee 725 • Adobe Flash Player • Apple TV • Qualcomm MSM7200 • Horizon Hz72220 • iPhone • HTC Touch Cruise • HTC Touch Dual • FFmpeg • Roku HD1000 Product • Roku HD1000 System • The knowledge of a person of ordinary skill in the art.
Jung	• Ahmad • Maeda • Sekiguchi • Miyamoto • Tian • Jung 207 • Yamatani • Saito • Mualla • Shirani • McWaid • H.263 2005 • MPEG-4 1999 • H.264 2003 • Lee 896

Patent No. or Title (Primary Inventor/Author)	In Combination with One or More of: (Patent No. or Title (Primary Inventor/Author))
	• Woods • Chujoh • Kim • Lee 982 • Lee 725 • Adobe Flash Player • Apple TV • Qualcomm MSM7200 • Horizon Hz72220 • iPhone • HTC Touch Cruise • HTC Touch Dual • FFmpeg • Roku HD1000 Product • Roku HD1000 System • The knowledge of a person of ordinary skill in the art.
Maeda	• Ahmad • Jung • Sekiguchi • Miyamoto • Tian • Jung 207 • Yamatani • Saito • Mualla • Shirani • McWaid • H.263 2005 • MPEG-4 1999 • H.264 2003 • Lee 896 • Woods • Chujoh • Kim • Lee 982 • Lee 725 • Adobe Flash Player • Apple TV • Qualcomm MSM7200 • Horizon Hz72220 • iPhone

Patent No. or Title (Primary Inventor/Author)	In Combination with One or More of: (Patent No. or Title (Primary Inventor/Author))
	• HTC Touch Cruise • HTC Touch Dual • FFmpeg • Roku HD1000 Product • Roku HD1000 System • The knowledge of a person of ordinary skill in the art.
Sekiguchi	• Ahmad • Jung • Maeda • Miyamoto • Tian • Jung 207 • Yamatani • Saito • Mualla • Shirani • McWaid • H.263 2005 • MPEG-4 1999 • H.264 2003 • Lee 896 • Woods • Chujoh • Kim • Lee 982 • Lee 725 • Adobe Flash Player • Apple TV • Qualcomm MSM7200 • Horizon Hz72220 • iPhone • HTC Touch Cruise • HTC Touch Dual • FFmpeg • Roku HD1000 Product • Roku HD1000 System • The knowledge of a person of ordinary skill in the art.
Miyamoto	• Ahmad • Jung • Maeda • Sekiguchi

Patent No. or Title (Primary Inventor/Author)	In Combination with One or More of: (Patent No. or Title (Primary Inventor/Author))
	• Tian • Jung 207 • Yamatani • Saito • Mualla • Shirani • McWaid • H.263 2005 • MPEG-4 1999 • H.264 2003 • Lee 896 • Woods • Chujoh • Kim • Lee 982 • Lee 725 • Adobe Flash Player • Apple TV • Qualcomm MSM7200 • Horizon Hz72220 • iPhone • HTC Touch Cruise • HTC Touch Dual • FFmpeg • Roku HD1000 Product • Roku HD1000 System • The knowledge of a person of ordinary skill in the art.
Yamatani	• Ahmad • Jung • Maeda • Sekiguchi • Miyamoto • Tian • Jung 207 • Saito • Mualla • Shirani • McWaid • H.263 2005 • MPEG-4 1999 • H.264 2003

Patent No. or Title (Primary Inventor/Author)	In Combination with One or More of: (Patent No. or Title (Primary Inventor/Author))
	• Lee 896 • Woods • Chujoh • Kim • Lee 982 • Lee 725 • Adobe Flash Player • Apple TV • Qualcomm MSM7200 • Horizon Hz72220 • iPhone • HTC Touch Cruise • HTC Touch Dual • FFmpeg • Roku HD1000 Product • Roku HD1000 System • The knowledge of a person of ordinary skill in the art.
Saito[19]	• Ahmad • Jung • Maeda • Sekiguchi • Miyamoto • Tian • Jung 207 • Yamatani • Mualla • Shirani • McWaid • H.263 2005 • MPEG-4 1999 • H.264 2003 • Lee 896 • Woods • Chujoh • Kim • Lee 982

[19] Defendants are providing notice of their intent to rely on each invalidity ground presented in IPR2024-00374, including Ground 1A that Mualla, Shirani, and Saito render Claims 1-10 obvious and Ground 1B that Mualla, Shirani, Saito, and Stockhammer render Claims 1-10 obvious.

Patent No. or Title (Primary Inventor/Author)	In Combination with One or More of: (Patent No. or Title (Primary Inventor/Author))
	• Lee 725 • Adobe Flash Player • Apple TV • Qualcomm MSM7200 • Horizon Hz72220 • iPhone • HTC Touch Cruise • HTC Touch Dual • FFmpeg • Roku HD1000 Product • Roku HD1000 System • Stockhammer • The knowledge of a person of ordinary skill in the art.
McWaid	• Ahmad • Jung • Maeda • Sekiguchi • Miyamoto • Tian • Jung 207 • Yamatani • Saito • Mualla • Shirani • H.263 2005 • MPEG-4 1999 • H.264 2003 • Lee 896 • Woods • Chujoh • Kim • Lee 982 • Lee 725 • Adobe Flash Player • Apple TV • Qualcomm MSM7200 • Horizon Hz72220 • iPhone • HTC Touch Cruise • HTC Touch Dual • FFmpeg

Patent No. or Title (Primary Inventor/Author)	In Combination with One or More of: (Patent No. or Title (Primary Inventor/Author))
	• Roku HD1000 Product • Roku HD1000 System • The knowledge of a person of ordinary skill in the art.
H.263 2005	• Ahmad • Jung • Maeda • Sekiguchi • Miyamoto • Tian • Jung 207 • Yamatani • Saito • Mualla • Shirani • McWaid • MPEG-4 1999 • H.264 2003 • Lee 896 • Woods • Chujoh • Kim • Lee 982 • Lee 725 • Adobe Flash Player • Apple TV • Qualcomm MSM7200 • Horizon Hz72220 • iPhone • HTC Touch Cruise • HTC Touch Dual • FFmpeg • Roku HD1000 Product • Roku HD1000 System • The knowledge of a person of ordinary skill in the art.
MPEG-4 1999	• Ahmad • Jung • Maeda • Sekiguchi • Miyamoto • Tian • Jung 207

Patent No. or Title (Primary Inventor/Author)	In Combination with One or More of: (Patent No. or Title (Primary Inventor/Author))
	• Yamatani • Saito • Mualla • Shirani • McWaid • H.263 2005 • H.264 2003 • Lee 896 • Woods • Chujoh • Kim • Lee 982 • Lee 725 • Adobe Flash Player • Apple TV • Qualcomm MSM7200 • Horizon Hz72220 • iPhone • HTC Touch Cruise • HTC Touch Dual • FFmpeg • Roku HD1000 Product • Roku HD1000 System • The knowledge of a person of ordinary skill in the art.
H.264 2003	• Ahmad • Jung • Maeda • Sekiguchi • Miyamoto • Tian • Jung 207 • Yamatani • Saito • Mualla • Shirani • McWaid • H.263 2005 • MPEG-4 1999 • Lee 896 • Woods • Chujoh

Patent No. or Title (Primary Inventor/Author)	In Combination with One or More of: (Patent No. or Title (Primary Inventor/Author))
	• Kim • Lee 982 • Lee 725 • Adobe Flash Player • Apple TV • Qualcomm MSM7200 • Horizon Hz72220 • iPhone • HTC Touch Cruise • HTC Touch Dual • FFmpeg • Roku HD1000 Product • Roku HD1000 System • The knowledge of a person of ordinary skill in the art.
Lee 896	• Ahmad • Jung • Maeda • Sekiguchi • Miyamoto • Tian • Jung 207 • Yamatani • Saito • Mualla • Shirani • McWaid • H.263 2005 • MPEG-4 1999 • H.264 2003 • Woods • Chujoh • Kim • Lee 982 • Lee 725 • Adobe Flash Player • Apple TV • Qualcomm MSM7200 • Horizon Hz72220 • iPhone • HTC Touch Cruise • HTC Touch Dual

Patent No. or Title (Primary Inventor/Author)	In Combination with One or More of: (Patent No. or Title (Primary Inventor/Author))
	• FFmpeg • Roku HD1000 Product • Roku HD1000 System • The knowledge of a person of ordinary skill in the art.
Woods	• Ahmad • Jung • Maeda • Sekiguchi • Miyamoto • Tian • Jung 207 • Yamatani • Saito • Mualla • Shirani • McWaid • H.263 2005 • MPEG-4 1999 • H.264 2003 • Lee 896 • Chujoh • Kim • Lee 982 • Lee 725 • Adobe Flash Player • Apple TV • Qualcomm MSM7200 • Horizon Hz72220 • iPhone • HTC Touch Cruise • HTC Touch Dual • FFmpeg • Roku HD1000 Product • Roku HD1000 System • The knowledge of a person of ordinary skill in the art.
Chujoh	• Ahmad • Jung • Maeda • Sekiguchi • Miyamoto • Tian

Patent No. or Title (Primary Inventor/Author)	In Combination with One or More of: (Patent No. or Title (Primary Inventor/Author))
	• Jung 207 • Yamatani • Saito • Mualla • Shirani • McWaid • H.263 2005 • MPEG-4 1999 • H.264 2003 • Lee 896 • Woods • Kim • Lee 982 • Lee 725 • Adobe Flash Player • Apple TV • Qualcomm MSM7200 • Horizon Hz72220 • iPhone • HTC Touch Cruise • HTC Touch Dual • FFmpeg • Roku HD1000 Product • Roku HD1000 System • The knowledge of a person of ordinary skill in the art.
Kim	• Ahmad • Jung • Maeda • Sekiguchi • Miyamoto • Tian • Jung 207 • Yamatani • Saito • Mualla • Shirani • McWaid • H.263 2005 • MPEG-4 1999 • H.264 2003 • Lee 896

Patent No. or Title (Primary Inventor/Author)	In Combination with One or More of: (Patent No. or Title (Primary Inventor/Author))
	• Woods • Chujoh • Lee 982 • Adobe Flash Player • Apple TV • Qualcomm MSM7200 • Horizon Hz72220 • iPhone • HTC Touch Cruise • HTC Touch Dual • FFmpeg • Roku HD1000 Product • Roku HD1000 System • The knowledge of a person of ordinary skill in the art.
Lee 982	• Ahmad • Jung • Maeda • Sekiguchi • Miyamoto • Tian • Jung 207 • Yamatani • Saito • Mualla • Shirani • McWaid • H.263 2005 • MPEG-4 1999 • H.264 2003 • Lee 896 • Woods • Chujoh • Kim • Lee 725 • Adobe Flash Player • Apple TV • Qualcomm MSM7200 • Horizon Hz72220 • iPhone • HTC Touch Cruise • HTC Touch Dual

Patent No. or Title (Primary Inventor/Author)	In Combination with One or More of: (Patent No. or Title (Primary Inventor/Author))
	• FFmpeg • Roku HD1000 Product • Roku HD1000 System • The knowledge of a person of ordinary skill in the art.
Lee 725	• Ahmad • Jung • Maeda • Sekiguchi • Miyamoto • Tian • Jung 207 • Yamatani • Saito • Mualla • Shirani • McWaid • H.263 2005 • MPEG-4 1999 • H.264 2003 • Lee 896 • Woods • Chujoh • Kim • Lee 982 • Adobe Flash Player • Apple TV • Qualcomm MSM7200 • Horizon Hz72220 • iPhone • HTC Touch Cruise • HTC Touch Dual • FFmpeg • Roku HD1000 Product • Roku HD1000 System • The knowledge of a person of ordinary skill in the art.
Adobe Flash Player	• Ahmad • Jung • Maeda • Sekiguchi • Miyamoto • Tian

Patent No. or Title (Primary Inventor/Author)	In Combination with One or More of: (Patent No. or Title (Primary Inventor/Author))
	• Jung 207 • Yamatani • Saito • Mualla • Shirani • McWaid • H.263 2005 • MPEG-4 1999 • H.264 2003 • Lee 896 • Woods • Chujoh • Kim • Lee 982 • Lee 725 • Apple TV • Qualcomm MSM7200 • Horizon Hz72220 • iPhone • HTC Touch Cruise • HTC Touch Dual • FFmpeg • Roku HD1000 Product • Roku HD1000 System • The knowledge of a person of ordinary skill in the art.
Apple TV	• Ahmad • Jung • Maeda • Sekiguchi • Miyamoto • Tian • Jung 207 • Yamatani • Saito • Mualla • Shirani • McWaid • H.263 2005 • MPEG-4 1999 • H.264 2003 • Lee 896

Patent No. or Title (Primary Inventor/Author)	In Combination with One or More of: (Patent No. or Title (Primary Inventor/Author))
	• Woods • Chujoh • Kim • Lee 982 • Lee 725 • Adobe Flash Player • Qualcomm MSM7200 • Horizon Hz72220 • iPhone • HTC Touch Cruise • HTC Touch Dual • FFmpeg • Roku HD1000 Product • Roku HD1000 System • The knowledge of a person of ordinary skill in the art.
Qualcomm MSM7200	• Ahmad • Jung • Maeda • Sekiguchi • Miyamoto • Tian • Jung 207 • Yamatani • Saito • Mualla • Shirani • McWaid • H.263 2005 • MPEG-4 1999 • H.264 2003 • Lee 896 • Woods • Chujoh • Kim • Lee 982 • Lee 725 • Adobe Flash Player • Apple TV • Horizon Hz72220 • iPhone • HTC Touch Cruise

Patent No. or Title (Primary Inventor/Author)	In Combination with One or More of: (Patent No. or Title (Primary Inventor/Author))
	• HTC Touch Dual • FFmpeg • Roku HD1000 Product • Roku HD1000 System • The knowledge of a person of ordinary skill in the art.
Horizon Hz72220	• Ahmad • Jung • Maeda • Sekiguchi • Miyamoto • Tian • Jung 207 • Yamatani • Saito • Mualla • Shirani • McWaid • H.263 2005 • MPEG-4 1999 • H.264 2003 • Lee 896 • Woods • Chujoh • Kim • Lee 982 • Lee 725 • Adobe Flash Player • Apple TV • Qualcomm MSM7200 • iPhone • HTC Touch Cruise • HTC Touch Dual • FFmpeg • Roku HD1000 Product • Roku HD1000 System • The knowledge of a person of ordinary skill in the art.
iPhone	• Ahmad • Jung • Maeda • Sekiguchi • Miyamoto

Patent No. or Title (Primary Inventor/Author)	In Combination with One or More of: (Patent No. or Title (Primary Inventor/Author))
	• Tian • Jung • Yamatani • Saito • Mualla • Shirani • McWaid • H.263 2005 • MPEG-4 1999 • H.264 2003 • Lee 896 • Woods • Chujoh • Kim • Lee 982 • Lee 725 • Adobe Flash Player • Apple TV • Qualcomm MSM7200 • Horizon Hz72220 • HTC Touch Cruise • HTC Touch Dual • FFmpeg • Roku HD1000 Product • Roku HD1000 System • The knowledge of a person of ordinary skill in the art.
HTC Touch Cruise	• Ahmad • Jung • Maeda • Sekiguchi • Miyamoto • Tian • Jung 207 • Yamatani • Saito • Mualla • Shirani • McWaid • H.263 2005 • MPEG-4 1999 • H.264 2003

Patent No. or Title (Primary Inventor/Author)	In Combination with One or More of: (Patent No. or Title (Primary Inventor/Author))
	• Lee 896 • Woods • Chujoh • Kim • Lee 982 • Lee 725 • Adobe Flash Player • Apple TV • Qualcomm MSM7200 • Horizon Hz72220 • iPhone • HTC Touch Dual • FFmpeg • Roku HD1000 Product • Roku HD1000 System • The knowledge of a person of ordinary skill in the art.
HTC Touch Dual	• Ahmad • Jung • Maeda • Sekiguchi • Miyamoto • Tian • Jung 207 • Yamatani • Saito • Mualla • Shirani • McWaid • H.263 2005 • MPEG-4 1999 • H.264 2003 • Lee 896 • Woods • Chujoh • Kim • Lee 982 • Lee 725 • Adobe Flash Player • Apple TV • Qualcomm MSM7200 • Horizon Hz72220

Patent No. or Title (Primary Inventor/Author)	In Combination with One or More of: (Patent No. or Title (Primary Inventor/Author))
	• iPhone • HTC Touch Cruise • FFmpeg • Roku HD1000 Product • Roku HD1000 System • The knowledge of a person of ordinary skill in the art.
FFmpeg	• Ahmad • Jung • Maeda • Sekiguchi • Miyamoto • Tian • Jung 207 • Yamatani • Saito • Mualla • Shirani • McWaid • H.263 2005 • MPEG-4 1999 • H.264 2003 • Lee 896 • Woods • Chujoh • Kim • Lee 982 • Lee 725 • Adobe Flash Player • Apple TV • Qualcomm MSM7200 • Horizon Hz72220 • iPhone • HTC Touch Cruise • HTC Touch Dual • Roku HD1000 Product • Roku HD1000 System • The knowledge of a person of ordinary skill in the art.

Patent No. or Title (Primary Inventor/Author)	In Combination with One or More of: (Patent No. or Title (Primary Inventor/Author))
Mualla[20]	• Ahmad • Jung • Maeda • Sekiguchi • Miyamoto • Tian • Jung 207 • Yamatani • Saito • Shirani • McWaid • H.263 2005 • MPEG-4 1999 • H.264 2003 • Lee 896 • Woods • Chujoh • Kim • Lee 982 • Lee 725 • Adobe Flash Player • Apple TV • Qualcomm MSM7200 • Horizon Hz72220 • iPhone • HTC Touch Cruise • HTC Touch Dual • FFmpeg • Roku HD1000 Product • Roku HD1000 System • Stockhammer • The knowledge of a person of ordinary skill in the art.
Shirani[21]	• Ahmad

[20] Defendants are providing notice of their intent to rely on each invalidity ground presented in IPR2024-00374, including Ground 1A that Mualla, Shirani, and Saito render Claims 1-10 obvious and Ground 1B that Mualla, Shirani, Saito, and Stockhammer render Claims 1-10 obvious.

[21] Defendants are providing notice of their intent to rely on each invalidity ground presented in IPR2024-00374, including Ground 1A that Mualla, Shirani, and Saito render Claims 1-10

Patent No. or Title (Primary Inventor/Author)	In Combination with One or More of: (Patent No. or Title (Primary Inventor/Author))
	• Jung • Maeda • Sekiguchi • Miyamoto • Tian • Jung 207 • Yamatani • Saito • Mualla • McWaid • H.263 2005 • MPEG-4 1999 • H.264 2003 • Lee 896 • Woods • Chujoh • Kim • Lee 982 • Lee 725 • Adobe Flash Player • Apple TV • Qualcomm MSM7200 • Horizon Hz72220 • iPhone • HTC Touch Cruise • HTC Touch Dual • FFmpeg • Roku HD1000 Product • Roku HD1000 System • Stockhammer • The knowledge of a person of ordinary skill in the art.
Tian	• Ahmad • Jung • Maeda • Sekiguchi • Miyamoto • Jung 207 • Yamatani

obvious and Ground 1B that Mualla, Shirani, Saito, and Stockhammer render Claims 1-10 obvious.

Patent No. or Title (Primary Inventor/Author)	In Combination with One or More of: (Patent No. or Title (Primary Inventor/Author))
	• Saito • Mualla • Shirani • McWaid • H.263 2005 • MPEG-4 1999 • H.264 2003 • Lee 896 • Woods • Chujoh • Kim • Lee 982 • Lee 725 • Adobe Flash Player • Apple TV • Qualcomm MSM7200 • Horizon Hz72220 • iPhone • HTC Touch Cruise • HTC Touch Dual • FFmpeg • Roku HD1000 Product • Roku HD1000 System • The knowledge of a person of ordinary skill in the art.
Roku HD1000 Product	• Ahmad • Jung • Maeda • Sekiguchi • Miyamoto • Jung 207 • Tian • Yamatani • Saito • Mualla • Shirani • McWaid • H.263 2005 • MPEG-4 1999 • H.264 2003 • Lee 896 • Woods

Patent No. or Title (Primary Inventor/Author)	In Combination with One or More of: (Patent No. or Title (Primary Inventor/Author))
	• Chujoh • Kim • Lee 982 • Lee 725 • Adobe Flash Player • Apple TV • Qualcomm MSM7200 • Horizon Hz72220 • iPhone • HTC Touch Cruise • HTC Touch Dual • FFmpeg • Roku HD1000 System • The knowledge of a person of ordinary skill in the art.
Roku HD1000 System	• Ahmad • Jung • Maeda • Sekiguchi • Miyamoto • Jung 207 • Tian • Yamatani • Saito • Mualla • Shirani • McWaid • H.263 2005 • MPEG-4 1999 • H.264 2003 • Lee 896 • Woods • Chujoh • Kim • Lee 982 • Lee 725 • Adobe Flash Player • Apple TV • Qualcomm MSM7200 • Horizon Hz72220 • iPhone • HTC Touch Cruise

Patent No. or Title (Primary Inventor/Author)	In Combination with One or More of: (Patent No. or Title (Primary Inventor/Author))
	• HTC Touch Dual • FFmpeg • Roku HD1000 Product • The knowledge of a person of ordinary skill in the art.
Jung 207	• Ahmad • Jung • Maeda • Sekiguchi • Miyamoto • Tian • Yamatani • Saito • Mualla • Shirani • McWaid • H.263 2005 • MPEG-4 1999 • H.264 2003 • Lee 896 • Woods • Chujoh • Kim • Lee 982 • Lee 725 • Adobe Flash Player • Apple TV • Qualcomm MSM7200 • Horizon Hz72220 • iPhone • HTC Touch Cruise • HTC Touch Dual • FFmpeg • Roku HD1000 Product • Roku HD1000 System • The knowledge of a person of ordinary skill in the art.
[22] IPR Petition	• Ground 1A: Mualla, Shirani, and Sito

[22] Defendants are providing notice of their intent to rely on each invalidity ground presented in IPR2024-00374, including Ground 1A that Mualla, Shirani, and Saito render Claims 1-10 obvious and Ground 1B that Mualla, Shirani, Saito, and Stockhammer render Claims 1-10 obvious.

Patent No. or Title (Primary Inventor/Author)	In Combination with One or More of: (Patent No. or Title (Primary Inventor/Author))
	• Ground 1B: Mualla, Shirani, Saito, and Stockhammer

As mentioned above, Defendants have not yet completed their search or discovery concerning additional prior art. Moreover, the exemplary combinations are provided based on Defendants' current understanding of the Asserted Claims and Plaintiff's apparent view of the scope of those claims as shown, for example, in Plaintiff's Infringement Contentions. Further, a *Markman* Order has not yet been issued in this case. As such, Defendants' inclusion of exemplary combinations does not preclude them from identifying other invalidating combinations as appropriate, and Defendants reserve the right to identify additional specific combinations as well as to detail and explain such combinations.

3. U.S. Patent No. 8,139,150

Pursuant to P.R. 3-3(a) and (b), Defendants identify in Appendix C the prior art references that render obvious the Asserted Claims of the '150 Patent and include below exemplary combinations showing the obviousness of the '150 Patent Asserted Claims in view of the prior art. The Court has not yet construed the claims and therefore the meaning of the terms in the '150 Patent Asserted Claims has yet to be resolved by the Court. The support identified herein and in Appendix C may be responsive at least in part to Plaintiff's infringement contentions, with which Defendants disagree. To the extent Plaintiff contends that an element is not disclosed in any one of the anticipatory references described in Appendix C, the limitation would have been obvious in light of the disclosures within the reference and the knowledge of one of ordinary skill in the art at the time of the '150 Patent. Moreover, to the extent Plaintiff contends that an element is not disclosed in any one of the anticipatory references described in Appendix C, such reference may be combined with any other references listed in Appendix C for such element, thereby rendering

the claims invalid for obviousness.

To the extent a finder of fact determines that a limitation of any of the ’150 Patent Asserted Claims is not disclosed by one of the references identified above pursuant to P.R. 3-3(a), the claim is nevertheless unpatentable as obvious because they contain nothing that constitutes a patentable innovation. To the extent a finder of fact determines that a limitation of the ’150 Patent Asserted Claims is not anticipated, it does not go beyond combining familiar elements according to known methods to achieve predictable results or does more than choose between clear alternatives known to those of ordinary skill in the art.

a. Obviousness Rationale and Motivations to Combine

Obviousness: For at least the reasons described in these contentions, it would have been obvious to one of ordinary skill in the art to combine any of a number of prior art references, including any combination of those prior art references identified in Appendix C along with the knowledge of one of ordinary skill in the art to meet the limitations of the ’150 Patent Asserted Claims. As a result, the references identified herein render one or more Asserted Claims of the ’150 Patent obvious when the references are read in combination with each other, and/or when read in view of the state of the art and knowledge of those skilled in the art. Each and every reference identified is also relevant to the state of the art at the time of the alleged invention. Any of the references disclosed above may be combined with one another to render obvious (and therefore invalid) each of ACT’s Asserted Claims. Defendants may rely upon a subset of the identified references or all of the references identified herein, including all references in Appendix C, for purposes of obviousness depending on the Court’s claim construction, positions taken by ACT during this litigation, and further investigation and discovery.

Reservation of Rights: Moreover, as mentioned above, Defendants have not yet

completed their search or discovery concerning additional prior art. As such, Defendants' inclusion of exemplary combinations does not preclude them from identifying other invalidating combinations as appropriate, and Defendants reserve the right to identify additional specific combinations as well as to detail and explain such combinations.

No More Than Ordinary Variations of Prior Art; No Unexpected Results: To the extent not anticipated, the '150 Patent Asserted Claims represent no more than the result of ordinary variations of the prior art. Defendants further believe that no showing of a specific motivation to combine prior art is required to combine the references disclosed above and in the attached charts, as each combination of art would have no unexpected results, and at most would simply represent a known alternative to one of ordinary skill in the art. *See KSR Int'l Co. v. Teleflex, Inc.*, 550 U.S. 398, 415-16 (2007) (rejecting the Federal Circuit's "rigid" application of the teaching, suggestion, or motivation to combine test, instead espousing an "expansive and flexible" approach); *Apple Inc. v. Samsung Elecs. Co*., 839 F.3d 1034, 1058 (Fed. Cir. 2016); *Intercontinental Great Brands LLC v. Kellogg N. Am. Co*., 869 F.3d 1336, 1344 (Fed. Cir. 2017). Indeed, the Supreme Court held that a person of ordinary skill in the art is "a person of ordinary creativity, not an automaton" and "in many cases a person of ordinary skill in the art will be able to fit the teachings of multiple patents together like pieces of a puzzle." *Id.* at 420-21. Nevertheless, in addition to the information contained elsewhere in these contentions, Defendants identify motivation and reason to combine the cited art.

Predictable Results; Obvious to Try: One or more combinations of the prior art references identified in Appendix C would have been obvious because these references would have been combined using: known methods to yield predictable results; known techniques in the same way; a simple substitution of one known, equivalent element for another to obtain predictable

results; and/or a teaching, suggestion, or motivation in the prior art generally. In addition, it would have been obvious to try combining the prior art references identified above because there were only a finite number of predictable solutions and/or because known work in one field of endeavor prompted variations based on predictable design incentives and/or market forces either in the same field or a different one. Further, the combinations of the prior art references identified in Appendix C would have been obvious because the combinations represent known potential options with a reasonable expectation of success.

Interrelated Teachings: Additional evidence that there would have been a motivation to combine the prior art references identified above includes the interrelated teachings of multiple prior art references; common authorship; the effects of demands known to the design community or present in the marketplace; the existence of a known problem for which there was an obvious solution encompassed by the '150 Patent Asserted Claims; the existence of a known need or problem in the field of the endeavor at the time of the alleged invention(s); and the background knowledge that would have been possessed by a person having ordinary skill in the art.

Summary of Motivations to Combine: Thus, the motivation to combine the teachings of the prior art references disclosed in Appendix C is found in the references themselves and also in: (1) the nature of the problem being solved; (2) the express, implied and inherent teachings of the prior art; (3) the knowledge of persons of ordinary skill in the art; (4) the predictable results obtained in combining the different elements of the prior art; (5) the predictable results obtained in simple substitution of one known element for another; (6) the use of a known technique to improve similar devices, methods, or products in the same way; (7) the predictable results obtained in applying a known technique to a known device, method, or product ready for improvement; (8) the finite number of identified predictable solutions that had a reasonable expectation of success;

and (9) known work in various technological fields that could be applied to the same or different technological fields based on design incentives or other market forces.

Same Area of Technology: Additionally, it would be obvious to one of ordinary skill in the art to consult and/or combine any of the prior art listed in Appendix C because all of these references relate to the same area of technology and/or are from analogous art. The ’150 Patent Asserted Claims are directed to decoding coded data representative of multi-view video taken from multiple viewpoints. ’150 Patent at Abstract, 1:9-14. The ’150 Patent Asserted Claims merely unite old elements, well known in the field, with no change in their respective function or result. Given the interrelated teachings of the prior art, the effects of demands known to the design community or present in the marketplace, and the background knowledge possessed by a person having ordinary skill in the art, it would have been obvious for one of ordinary skill in the art to combine these familiar elements, disclosed and/or embodied in the prior art listed above to practice the ’150 Patent Asserted Claims.

Same Technical Issues: A person of ordinary skill would have been motivated to combine the above prior art based on his/her knowledge, the nature of the problem to be solved, and the teachings of the prior art. The identified prior art addresses the same or similar technical issues and suggests the same or similar solutions to those issues. Moreover, some of the prior art refer to or discuss other prior art, illustrating the close technical relationship among the prior art. For the ’150 Patent, one of ordinary skill in the art would have been motivated to combine known prior art solutions described in these references relating to decoding or encoding multi-view video image data.

Demand and Market Forces: For example, market forces suggested a demand for multi-view video encoders and decoders, and thus one of skill in the art would have thought to combine

or modify references that described known methods that one of skill in the art would have recognized as offering improvements to solutions of that time.

Known Elements; Obvious to Try: Moreover, many of the claim elements were already known as admitted by the applicants in the patent specification. These elements represented design choices available to a person of ordinary skill. When there is a design need or market pressure to solve a problem such as identified previously and/or described in the ’150 Patent, and there are a finite number of identified, predictable solutions, a person of ordinary skill would be motivated to combine the known options that are within his or her technical grasp. For the ’150 Patent, there are a finite number of approaches for decoding coded data representative of multi-view video video taken from multiple viewpoinbts. For example, as of the priority date of the ’150 Patent, a POSITA would have been very familiar with basic elements of the ’150 Patent’s claims such as designating at least one of the viewpoints from which the multi-video was taken as the base viewpoint. Such elements were within the knowledge of a POSITA, whether or not disclosed in any particular reference, and the inclusion of such elements in the ’150 Patent’s claims does not render them novel or non-obvious.

Additional evidence that there would have been a motivation to combine the prior art references identified above includes the interrelated teachings of multiple prior art references; common authorship; the effects of demands known to the design community or present in the marketplace; the existence of a known problem for which there was an obvious solution encompassed by the ’150 Patent Asserted Claims; the existence of a known need or problem in the field of the endeavor at the time of the alleged invention(s); and the background knowledge that would have been possessed by a person having ordinary skill in the art.

Thus, the motivation to combine the teachings of the prior art references disclosed in

Appendix C is found in the references themselves and also in: (1) the nature of the problem being solved; (2) the express, implied and inherent teachings of the prior art; (3) the knowledge of persons of ordinary skill in the art; (4) the predictable results obtained in combining the different elements of the prior art; (5) the predictable results obtained in simple substitution of one known element for another; (6) the use of a known technique to improve similar devices, methods, or products in the same way; (7) the predictable results obtained in applying a known technique to a known device, method, or product ready for improvement; (8) the finite number of identified predictable solutions that had a reasonable expectation of success; and (9) known work in various technological fields that could be applied to the same or different technological fields based on design incentives or other market forces.

Additionally, it would be obvious to one of ordinary skill in the art to consult and/or combine any of the prior art listed in Appendix C because all of these references relate to the same area of technology and/or are from analogous art. The ’150 Patent Asserted Claims are directed to decoding coded data representative of multi-view video taken from multiple viewpoints, designating one of those viewpoints as a base viewpoint, and delaying decoding non-base viewpoints relative to decoding base viewpoints. ’150 Patent at Abstract, 1:9-14; claims 1-4. The ’150 Patent Asserted Claims merely unite old elements, well known in the field, with no change in their respective function or result. Given the interrelated teachings of the prior art, the effects of demands known to the design community or present in the marketplace, and the background knowledge possessed by a person having ordinary skill in the art, it would have been obvious for one of ordinary skill in the art to combine these familiar elements, disclosed and/or embodied in the prior art listed above to practice the ’150 Patent Asserted Claims.

In addition to the specific examples provided above, Defendants reserve the right to rely

on the disclosures of the references listed in Appendix C for additional motivation to combine. These examples of combinations are given merely to illustrate various motivations to combine and are not intended to provide an exhaustive list of every possible combination to which the motivation may apply. Defendants reserve the right to contend that the motivations to combine provided herein apply to other combinations at the appropriate time, e.g., in expert reports regarding invalidity. To the extent one or more of identified combinations is posed as a combination of only two references, it does not indicate that the two references that are being combined for one purpose could not be joined by a third reference (or more additional references) whose combination serves the same or a different purpose. Indeed, many of the features recited in the asserted claims are componentized features/functions whereby the feature could be implemented using teachings from another source while not interfering with additional features. For that reason, a POSITA may have reasonably looked to and been motivated to combine three or more references in order to achieve a specific outcome.

In addition to the specific examples provided above, Defendants reserve the right to rely on the disclosures of the references listed in Appendix C for additional motivation to combine. These examples of combinations are given merely to illustrate various motivations to combine and are not intended to provide an exhaustive list of every possible combination to which the motivation may apply. Defendants reserve the right to contend that the motivations to combine provided herein apply to other combinations at the appropriate time, e.g., in expert reports regarding invalidity. To the extent one or more of identified combinations is posed as a combination of only two references, it does not indicate that the two references that are being combined for one purpose could not be joined by a third reference (or more additional references) whose combination serves the same or a different purpose. Indeed, many of the features recited

in the asserted claims are componentized features/functions whereby the feature could be implemented using teachings from another source while not interfering with additional features. For that reason, a POSITA may have reasonably looked to and been motivated to combine three or more references in order to achieve a specific outcome.

b. Combinations

For example, and without limitation, in addition to the reasons outlined above, the Asserted Claims of the '150 Patent would have been obvious to one of ordinary skill in the art in view of the following combinations:

(i) Multiview, Stereoscopic, and 3D References: Chen (C1), Haskell (C4), Chen-Luthra (C2), Tseng (C17), Ha (C3), Kim (C5), McVeigh (C6), Pandit (C7), Philips's 3D 4YOU LCD Monitor (C12), Roku Product (C13), Roku System (C16), MSM 7200 (C14), and 3DTV.at Stereoscopic Player (C11) in combination with FFmpeg (C15), H.262 (2000), H.263 (2005), H.264 (2005), Park (C8), Wang (C10), and Sekguchi (C9)

A POSITA would have had reason to combine Chen (C1), Haskell (C4), Chen-Luthra (C2), Tseng (C17), Ha (C3), Kim (C5), McVeigh (C6), Pandit (C7), Philips's 3D 4YOU LCD Monitor (C12), Roku Product (C13), Roku System (C16), MSM 7200 (C14), and 3DTV.at Stereoscopic Player (C11) with any of FFmpeg (C15), H.262 (2000), H.263 (2005), H.264 (2005), Park (C8), Wang (C10), and Sekguchi (C9) with any one of H.262 (2000), H.263 (2005), H.264 (2005), Park (C8), Wang (C10), and Sekguchi (C9), all of which relate to systems and methods for decoding and reconstruction of multiview, stereoscopic, and 3D videos in a bitstream. Each of Chen (C1), Haskell (C4), Chen-Luthra (C2), Ha (C3), Kim (C5), McVeigh (C6), Pandit (C7), Philips's 3D 4YOU LCD Monitor (C12), Roku Product (C13), Roku System (C16), MSM 7200 (C14), and 3DTV.at Stereoscopic Player (C11) concern receiving, decoding, and reconstructing Multiview or 3D images. Indeed, such processes and systems were conventional as of the time these references

were known. Chen (C1), Haskell (C4), Chen-Luthra (C2), Tseng (C17), Ha (C3), Kim (C5), McVeigh (C6), Pandit (C7), Philips's 3D 4YOU LCD Monitor (C12), Roku Product (C13), Roku System (C16), MSM 7200 (C14), and 3DTV.at Stereoscopic Player (C11) provide means—not necessarily expressly present in all other references—for processing a bitstream, including decoding and reconstructing video and images within the stream. A POSITA would have understood that the systems and methods for applying decoding and reconstruction of multiview, stereoscopic, and 3D video (such as those taught in Chen (C1), Haskell (C4), Chen-Luthra (C2), Tseng (C17), Ha (C3), Kim (C5), McVeigh (C6), Pandit (C7), Philips's 3D 4YOU LCD Monitor (C12), Roku Product (C13), Roku System (C16), MSM 7200 (C14), and 3DTV.at Stereoscopic Player (C11)) were intended to be incorporated into additional codecs and systems, which Park acknowledges. Given that FFmpeg (C15), H.262 (2000), H.263 (2005), H.264 (2005), Park (C8), Wang (C10), and Sekguchi (C9) describe well-known codec functionality (including processing and decoding of video within received bitstreams) used for reconstructing a video stream, a POSITA would have been motivated to combine the teachings of these references. The combination would apply known techniques to apply applying decoding and reconstruction of multiview, stereoscopic, and 3D video, to codecs, systems, and methods that were ready for improvement, in order to yield predictable results. The combination would further be "obvious to try," because it would involve simple design choices from a finite number of identified, predictable solutions, with a reasonable expectation of success.

(ii) <u>Delay Time References: Chen (C1), Chen-Luthra (C2), Tseng (C17), Philips's 3D 4YOU LCD Monitor (C12), and 3DTV.at Stereoscopic Player (C11), Roku Product (C13), Roku System (C16), and MSM 7200 (C14) in combination with H.262 (2000), H.263 (2005), H.264 (2005), Ha (C3), Haskell (C4), Kim (C5), McVeigh (C6), Pandit (C7), Park (C8), Wang (C10), and Sekguchi (C9)</u>

A POSITA would have had reason to combine Chen (C1), Chen-Luthra (C2), Tseng (C17),

Philips's 3D 4YOU LCD Monitor (C12), and 3DTV.at Stereoscopic Player (C11), Roku Product (C13), Roku System (C16), and MSM 7200 (C14) with any one of H.262 (2000), H.263 (2005), H.264 (2005), Ha (C3), Haskell (C4), Kim (C5), McVeigh (C6), Pandit (C7), Park (C8), Wang (C10), and Sekguchi (C9), all of which relate to systems and methods for inputting, encoding, and decoding information representing a desired delay between the end decoding a type of signal and the start of decoding a different type of signal—as well as actually delaying decoding such signals in accordance with the encoded desired delay. Each of Chen (C1), Chen-Luthra (C2), Tseng (C17), Philips's 3D 4YOU LCD Monitor (C12), and 3DTV.at Stereoscopic Player (C11), Roku Product (C13), Roku System (C16), and MSM 7200 (C14) concern receiving, decoding, and delaying decoding of certain signals based on decoding encoded information representing such desired delays. Indeed, such processes and systems were conventional as of the time these references were known. Each of Chen (C1), Chen-Luthra (C2), Tseng (C17), Philips's 3D 4YOU LCD Monitor (C12), and 3DTV.at Stereoscopic Player (C11), Roku Product (C13), Roku System (C16), and MSM 7200 (C14) provide means—not necessarily expressly present in all other references—for decoding encoded information representative of an amount of time for which to delay between the end decoding a type of signal and the start of decoding a different type of signal. A POSITA would have understood that the systems and methods for applying decoding and delaying decoding certain signals in this manner (such as those taught in Chen (C1), Chen-Luthra (C2), Tseng (C17), Philips's 3D 4YOU LCD Monitor (C12), and 3DTV.at Stereoscopic Player (C11), Roku Product (C13), Roku System (C16), and MSM 7200 (C14)) were intended to be incorporated into additional codecs and systems, which Chen acknowledges. Given that H.262 (2000), H.263 (2005), H.264 (2005), Ha (C3), Haskell (C4), Kim (C5), McVeigh (C6), Pandit (C7), Park (C8), Wang (C10), and Sekguchi (C9) describe well-known codec functionality (including processing

and decoding of video within received bitstreams) used for reconstructing a video stream, a POSITA would have been motivated to combine the teachings of these references. The combination would apply known techniques to apply receiving, decoding, and delaying decoding of certain signals based on decoding encoded information representing such desired delays to codecs, systems, and methods that were ready for improvement, in order to yield predictable results. The combination would further be "obvious to try," because it would involve simple design choices from a finite number of identified, predictable solutions, with a reasonable expectation of success.

c. Additional Combinations

For at least the reasons described above, it would have been obvious to one of ordinary skill in the art to combine each prior art reference listed in Appendix C with any other reference or references listed in Appendix C along with the knowledge of one of ordinary skill in the art to arrive at the inventions claims in the '150 Patent.[23] For example, and without limitation, the Asserted Claims of the '150 Patent would have been obvious to one of ordinary skill in the art in view of the following combinations:

Patent No. or Title (Primary Inventor/Author)	In Combination with One or More of: (Patent No. or Title (Primary Inventor/Author))
Pandit	• Sekiguchi • Ha • Haskell • Wang • Chen • Kim • Chen-Luthra

[23] Further, Defendants are actively searching for information regarding at least the systems, devices, and/or inventions listed above in Table 2-C. It would have been obvious to one of ordinary skill in the art to combine each of the prior art references listed in Appendix C with any of the systems identified in Table 2-C. Defendants reserve the right to supplement or amend these contentions as discovery progresses, to the extent permitted by the Court.

Patent No. or Title (Primary Inventor/Author)	In Combination with One or More of: (Patent No. or Title (Primary Inventor/Author))
	• Park • McVeigh • Phillips 3DTV • 3DTV.at • MSM 7200 • Roku Product • Roku System • Tseng • FFmpeg • The knowledge of a person of ordinary skill in the art.
Sekiguchi	• Pandit • Ha • Haskell • Wang • Chen • Kim • Chen-Luthra • Park • McVeigh • Phillips 3DTV • 3DTV.at • MSM 7200 • Roku Product • Roku System • Tseng • FFmpeg • The knowledge of a person of ordinary skill in the art.
Ha	• Pandit • Sekiguchi • Haskell • Wang • Chen • Kim • Chen-Luthra • Park • McVeigh • Phillips 3DTV • 3DTV.at • MSM 7200 • Roku Product • Roku System

Patent No. or Title (Primary Inventor/Author)	In Combination with One or More of: (Patent No. or Title (Primary Inventor/Author))
	• Tseng • FFmpeg • The knowledge of a person of ordinary skill in the art.
Haskell	• Pandit • Sekiguchi • Ha • Wang • Chen • Kim • Chen-Luthra • Park • McVeigh • Phillips 3DTV • 3DTV.at • MSM 7200 • Roku Product • Roku System • Tseng • FFmpeg • The knowledge of a person of ordinary skill in the art.
Wang	• Pandit • Sekiguchi • Ha • Haskell • Chen • Kim • Chen-Luthra • Park • McVeigh • Phillips 3DTV • 3DTV.at • MSM 7200 • Roku Product • Roku System • Tseng • FFmpeg • The knowledge of a person of ordinary skill in the art.
Chen	• Pandit • Sekiguchi • Ha • Haskell

Patent No. or Title (Primary Inventor/Author)	In Combination with One or More of: (Patent No. or Title (Primary Inventor/Author))
	• Wang • Kim • Chen-Luthra • Park • McVeigh • Phillips 3DTV • 3DTV.at • MSM 7200 • Roku Product • Roku System • Tseng • FFmpeg • The knowledge of a person of ordinary skill in the art.
Kim	• Pandit • Sekiguchi • Ha • Haskell • Wang • Chen • Chen-Luthra • Park • McVeigh • Phillips 3DTV • 3DTV.at • MSM 7200 • Roku Product • Roku System • Tseng • FFmpeg • The knowledge of a person of ordinary skill in the art.
Chen-Luthra	• Pandit • Sekiguchi • Ha • Haskell • Wang • Chen • Kim • Park • McVeigh • Phillips 3DTV • 3DTV.at

Patent No. or Title (Primary Inventor/Author)	In Combination with One or More of: (Patent No. or Title (Primary Inventor/Author))
	• MSM 7200 • Roku Product • Roku System • Tseng • FFmpeg • The knowledge of a person of ordinary skill in the art.
Park	• Pandit • Sekiguchi • Ha • Haskell • Wang • Chen • Kim • Chen-Luthra • McVeigh • Phillips 3DTV • 3DTV.at • MSM 7200 • Roku Product • Roku System • Tseng • FFmpeg • The knowledge of a person of ordinary skill in the art.
McVeigh	• Pandit • Sekiguchi • Ha • Haskell • Wang • Chen • Kim • Chen-Luthra • Park • Phillips 3DTV • 3DTV.at • MSM 7200 • Roku Product • Roku System • Tseng • FFmpeg • The knowledge of a person of ordinary skill in the art.
Phillips 3DTV	• Pandit

Patent No. or Title (Primary Inventor/Author)	In Combination with One or More of: (Patent No. or Title (Primary Inventor/Author))
	• Sekiguchi • Ha • Haskell • Wang • Chen • Kim • Chen-Luthra • Park • McVeigh • 3DTV.at • MSM 7200 • Roku Product • Roku System • Tseng • FFmpeg • The knowledge of a person of ordinary skill in the art.
3DTV.at	• Pandit • Sekiguchi • Ha • Haskell • Wang • Chen • Kim • Chen-Luthra • Park • McVeigh • Phillips 3DTV • MSM 7200 • Roku Product • Roku System • Tseng • FFmpeg • The knowledge of a person of ordinary skill in the art.
MSM 7200	• Pandit • Sekiguchi • Ha • Haskell • Wang • Chen • Kim • Chen-Luthra

Patent No. or Title (Primary Inventor/Author)	In Combination with One or More of: (Patent No. or Title (Primary Inventor/Author))
	• Park • McVeigh • Phillips 3DTV • 3DTV.at • Roku Product • Roku System • Tseng • FFmpeg • he knowledge of a person of ordinary skill in the art.
Roku Product	• Pandit • Sekiguchi • Ha • Haskell • Wang • Chen • Kim • Chen-Luthra • Park • McVeigh • Phillips 3DTV • 3DTV.at • MSM 7200 • Roku System • Tseng • FFmpeg • The knowledge of a person of ordinary skill in the art.
FFmpeg	• Pandit • Sekiguchi • Ha • Haskell • Wang • Chen • Kim • Chen-Luthra • Park • McVeigh • Phillips 3DTV • 3DTV.at • MSM 7200 • Roku Product • Roku System

Patent No. or Title (Primary Inventor/Author)	In Combination with One or More of: (Patent No. or Title (Primary Inventor/Author))
	• Tseng • The knowledge of a person of ordinary skill in the art.
Roku System	• Pandit • Sekiguchi • Ha • Haskell • Wang • Chen • Kim • Chen-Luthra • Park • McVeigh • Phillips 3DTV • 3DTV.at • MSM 7200 • Roku Product • Tseng • FFmpeg • The knowledge of a person of ordinary skill in the art.
Tseng	• Pandit • Sekiguchi • Ha • Haskell • Wang • Chen • Kim • Chen-Luthra • Park • McVeigh • Phillips 3DTV • 3DTV.at • MSM 7200 • Roku Product • Roku System • FFmpeg • The knowledge of a person of ordinary skill in the art.

4. U.S. Patent No. 9,445,041

Pursuant to P.R. 3-3(a) and (b), Defendants identify in Appendix D the prior art references

that render obvious the Asserted Claims of the ’041 Patent and include below exemplary combinations showing the obviousness of the ’041 Patent Asserted Claims in view of the prior art. To the extent Plaintiff contends that an element is not disclosed in any one of the anticipatory references described in Appendix D, the limitation would have been obvious in light of the disclosures within the reference and the knowledge of one of ordinary skill in the art at the time of the ’041 Patent. Moreover, to the extent Plaintiff contends that an element is not disclosed in any one of the anticipatory references described in Appendix D, such reference may be combined with any other references listed in Appendix D for such element, thereby rendering the claims invalid for obviousness. To the extent a finder of fact determines that a limitation of any of the ’041 Patent Asserted Claims is not disclosed by one of the references identified above pursuant to P.R. 3-3(a), the claim is nevertheless unpatentable as obvious because they contain nothing that constitutes a patentable innovation. To the extent a finder of fact determines that a limitation of the ’041 Patent Asserted Claims is not anticipated, it does not go beyond combining familiar elements according to known methods to achieve predictable results or does more than choose between clear alternatives known to those of ordinary skill in the art.

a. Obviousness Rationale and Motivations to Combine

Obviousness: For at least the reasons described in these contentions, it would have been obvious to one of ordinary skill in the art to combine any of a number of prior art references, including any combination of those prior art references identified in Appendix D along with the knowledge of one of ordinary skill in the art to meet the limitations of the ’041 Patent Asserted Claims. As a result, the references identified herein render one or more Asserted Claims of the ’041 Patent obvious when the references are read in combination with each other, and/or when read in view of the state of the art and knowledge of those skilled in the art. Each and every

reference identified is also relevant to the state of the art at the time of the alleged invention. Any of the references disclosed above may be combined with one another to render obvious (and therefore invalid) each of ACT's Asserted Claims. Defendants may rely upon a subset of the identified references or all of the references identified herein, including all references in Appendix D, for purposes of obviousness depending on the Court's claim construction, positions taken by ACT during this litigation, and further investigation and discovery.

Reservation of Rights: Moreover, as mentioned above, Defendants have not yet completed their search or discovery concerning additional prior art. As such, Defendants' inclusion of exemplary combinations does not preclude them from identifying other invalidating combinations as appropriate, and Defendants reserve the right to identify additional specific combinations as well as to detail and explain such combinations.

No More Than Ordinary Variations of Prior Art; No Unexpected Results: To the extent not anticipated, the '041 Patent Asserted Claims represent no more than the result of ordinary variations of the prior art. Defendants further believe that no showing of a specific motivation to combine prior art is required to combine the references disclosed above and in the attached charts, as each combination of art would have no unexpected results, and at most would simply represent a known alternative to one of ordinary skill in the art. *See KSR Int'l Co. v. Teleflex, Inc.*, 550 U.S. 398, 415-16 (2007) (rejecting the Federal Circuit's "rigid" application of the teaching, suggestion, or motivation to combine test, instead espousing an "expansive and flexible" approach); *Apple Inc. v. Samsung Elecs. Co*., 839 F.3d 1034, 1058 (Fed. Cir. 2016); *Intercontinental Great Brands LLC v. Kellogg N. Am. Co*., 869 F.3d 1336, 1344 (Fed. Cir. 2017). Indeed, the Supreme Court held that a person of ordinary skill in the art is "a person of ordinary creativity, not an automaton" and "in many cases a person of ordinary skill in the art will be able

to fit the teachings of multiple patents together like pieces of a puzzle." *Id.* at 420-21. Nevertheless, in addition to the information contained elsewhere in these contentions, Defendants identify motivation and reason to combine the cited art.

Predictable Results; Obvious to Try: One or more combinations of the prior art references identified in Appendix D would have been obvious because these references would have been combined using: known methods to yield predictable results; known techniques in the same way; a simple substitution of one known, equivalent element for another to obtain predictable results; and/or a teaching, suggestion, or motivation in the prior art generally. In addition, it would have been obvious to try combining the prior art references identified above because there were only a finite number of predictable solutions and/or because known work in one field of endeavor prompted variations based on predictable design incentives and/or market forces either in the same field or a different one. Further, the combinations of the prior art references identified in Appendix D would have been obvious because the combinations represent known potential options with a reasonable expectation of success.

Interrelated Teachings: Additional evidence that there would have been a motivation to combine the prior art references identified above includes the interrelated teachings of multiple prior art references; common authorship; the effects of demands known to the design community or present in the marketplace; the existence of a known problem for which there was an obvious solution encompassed by the '041 Patent Asserted Claims; the existence of a known need or problem in the field of the endeavor at the time of the alleged invention(s); and the background knowledge that would have been possessed by a person having ordinary skill in the art.

Summary of Motivations to Combine: Thus, the motivation to combine the teachings of the prior art references disclosed in Appendix D is found in the references themselves and also in:

(1) the nature of the problem being solved; (2) the express, implied and inherent teachings of the prior art; (3) the knowledge of persons of ordinary skill in the art; (4) the predictable results obtained in combining the different elements of the prior art; (5) the predictable results obtained in simple substitution of one known element for another; (6) the use of a known technique to improve similar devices, methods, or products in the same way; (7) the predictable results obtained in applying a known technique to a known device, method, or product ready for improvement; (8) the finite number of identified predictable solutions that had a reasonable expectation of success; and (9) known work in various technological fields that could be applied to the same or different technological fields based on design incentives or other market forces.

Same Area of Technology: Additionally, it would be obvious to one of ordinary skill in the art to consult and/or combine any of the prior art listed in Appendix D because all of these references relate to the same area of technology and/or are from analogous art. The '041 Patent Asserted Claims relate to techniques for "moving image data" (e.g., video) "processing" that purportedly enable "play back [of] moving image data generated at various frame rates at an arbitrary frame rate and playback speed." '041 Patent at 3:19. The patent describes a system that receives "moving image data" as input, and "specifies a frame rate of [the] moving image data." *Id.* at 7:58-59. For example, "if the image capture frame rate information or information of a similar kind, is described in a predetermined data area, or is present as metadata, the input frame rate is specified based on them." *Id.* at 8:3-6. The system also "specifies" an "output frame rate … of output moving image data when the moving image data is to be output." *Id.* at 8:11-13. The patent describes that this output frame rate can be specified based on a "selection by the user, … based on the setting of an external device being an output destination" (*e.g.,* based on a frame rate supported by an output device), or based on other considerations. *Id.* at 8:16-17. The system also

specifies a "playback speed of the moving image data to be output." *Id.* at 8:59. The patent describes that a "user can select/set the playback speed" or "a predetermined playback speed (for example, only the equal speed), for example, only equal-speed playback, may be used," in which case the system "specifies the predetermined playback speed as the playback speed of the moving image data to be output." *Id.* at 9:4-17. The patent further describes that the system "converts the frame rate of the input moving image data based on the specified output frame rate and playback speed." *Id.* at 9:18-20. The '041 Patent states that the "conversion of the frame rate" can be "performed based on a known method such as interpolation in addition to decimation." *Id.* at 9:20-23. The '041 Patent Asserted Claims merely unite old elements and features, well known in the field, with no change in their respective function or result. Given the interrelated teachings of the prior art, the effects of demands known to the design community or present in the marketplace, and the background knowledge possessed by a person having ordinary skill in the art, it would have been obvious for one of ordinary skill in the art to combine these familiar elements, disclosed and/or embodied in the prior art listed above to practice the '041 Patent Asserted Claims.

Same Technical Issues: A person of ordinary skill would have been motivated to combine the above prior art based on his/her knowledge, the nature of the problem to be solved, and the teachings of the prior art. The identified prior art addresses the same or similar technical issues and suggests the same or similar solutions to those issues. Moreover, some of the prior art refer to or discuss other prior art, illustrating the close technical relationship among the prior art. For the '041 Patent, one of ordinary skill in the art would have been motivated to combine known prior art solutions described in these references relating to image and video processing and/or digital camera related features.

Demand and Market Forces: For example, market forces suggested a demand for

increased quality and efficiency in image and video processing, and thus one of skill in the art would have thought to combine or modify references that described known methods that one of skill in the art would have recognized as offering improvements to solutions of that time.

Known Elements; Obvious to Try: Moreover, many of the claim elements were already known as admitted by the applicants in the patent specification. These elements represented design choices available to a person of ordinary skill. When there is a design need or market pressure to solve a problem such as identified previously and/or described in the ’041 Patent, and there are a finite number of identified, predictable solutions, a person of ordinary skill would be motivated to combine the known options that are within his or her technical grasp. For the ’041 Patent, there are a finite number of high-level approaches for combining a plurality of images to reduce distortion and/or provide other image and video improvements or corrections. For example, as of the priority date of the ’041 Patent, a POSITA would have been very familiar with basic elements of the ’041 Patent’s claims such as processors within the moving image data devices that are configured to perform moving image processing functions. Such elements were within the knowledge of a POSITA, whether or not disclosed in any particular reference, and the inclusion of such elements in the ’041 Patent’s claims does not render them novel or non-obvious. Moreover, a POSITA would have found it obvious to perform the moving image data processing functions described in the prior art within a processor, regardless of whether they are described in the prior art functionally or as being performed within a module or other computer logic. The use of video reproduction and the conversion of frame rates was readily known and obvious to a POSITA.

<u>Conversion of Frame Rates:</u> For example, the conversion of moving image data from a first frame rate to a second frame rate has been practiced in the film industry at least since the early

days of television broadcasting. For example, it was and in some cases still is a standard practice to have film provided for display from a projector, in a movie theater, to have a frame rate of 24 frames per second, whereas 30 and 60 frames per second are more common in television broadcasts. The common practice was and still is to convert the film to a format suitable for televisions and other display equipment. This well known process is often referred to as telecine. This practice utilized various machines and techniques at least since the 1980s to convert film from a first frame rate to a second frame rate. Armitano, *Low Cost Telecine Detection for Real-Time Video Coding*, Proceedings Volume 3528, Multimedia Systems and Applications; (1999).

Two Input Rates: It was was well-known at time of the alleged invention that a moving image data processing apparatus could input a moving image data at a first frame rate and input a second image data at a second frame rate. *See* citations for [1pre]–[1a], [6pre]–[6a] in Appx. D. As acknowledged by the '041 Patent, it was well known that users set "different frame rates according to imaging data to capture various scenes and subjects," depending on the needs, such as "scenes of a travel, a birthday party of a user's family, and the like" at frame rates such as 30-60 fps, scenes where "the motion of the subject is quick for example when capturing a sport scene and the like" at frame rates such as 300-600 fps, and scenes where "a subject . . . makes subtle changes over a long time for example, when capturing a plant growing scene" at frame rates such as 1/20-1/80 fps. '041 Patent at 1:32-42, 2:17-29; *e.g.*, Aiba at Fig. 2, [0002], [0019]; Walpole at 270-271; Morikawa at [0009], [0024]-[0025], [0028]; MVE 4 at 47-48.

Specifying Frame Rates: Further, it was well-known at the time of the alleged invention that in order to generate moving image data at different frame rates, it was necessary to have a mechanism to specify a first and second frame rate. *See* citations for [1b]–[1c], [6b]–[6c] in Appx. D. Moreover, in order to play back the inputted video at different rates (e.g., slow motion), it was

well-known to allow a user to specify the output frame rates or modes and playback speeds for inputted video, and to allow a user to output the moving image data. *See* citations for [1d]–[1g], [6d]–[6g] in Appx. D; *e.g.*, Ishii at [0061], Kurita at 3:45-55; Seikiguchi at Abstract.

Input and Output Frame Rates: Further, it was well-known at the time of the alleged invention to operate a device to accept an input to specify a playback speed, or specify an output frame rate based on information of an external device that receives the moving image data. Specifically, the conversion of frame rates, from a first frame rate to a second frame rate was not only known, but commonly practiced in the industry. For example, media such as films are not always captured at the same frame rate on the camera as they are displayed on the television. *See* citations for [2], [4] in Appx. D; *e.g.*, Kurita at 5-17:41; Aiba at Fig. 2, [0002], [0019]; Morikawa at [0009], Suzuki at [0004].

There are significant similarities in subject matter and objectives for each of many references used in these contentions for the ’041 Patent.

Video Reproduction and Playback Technology References: For example, and without limitation, all of Morikawa (D11), Suzuki (D16), Seikiguchi (D15), Walpole (D17), Aiba (D1), Kurita (D8), Hurst (D5), and Magix Video Editor (D9) relate to video reproduction and video playback technology directed to improving the quality of moving image data output based on certain frame rates and/or playback speeds. Thus, to the extent any one of these references includes a feature not expressly disclosed in one or more other references, a POSITA would have naturally looked to, and been motivated to combine, any one of these references with one or more of the other references in order to better achieve their common goals of reducing processing times and improving the user experience when outputting moving image data at different frame rates and/or playback speeds.

One of ordinary skill in the art would have been motivated to combine any of the references in Appendix D at the time of the alleged invention. Common problems with conventional techniques for selecting input frame rates, output frame rates, and playback speeds were well-known solutions to allow for different frame rates and playback speeds for different types of videos. *See, e.g.*, '041 Patent at 1:25-3:12; Appx. D1–D17.

In addition to the specific examples of motivation provided above, Defendants reserve the right to rely on the disclosures of the references listed in Appendix D for additional motivation to combine. The above-identified examples of combinations are given merely to illustrate various motivations to combine and are not intended to provide an exhaustive list of every possible combination to which the motivation may apply. Defendants reserve the right to contend that the above-described motivations to combine apply to other combinations at the appropriate time, *e.g.*, in expert reports regarding invalidity.

b. Combinations

For at least the reasons described above, it would have been obvious to one of ordinary skill in the art to combine each prior art reference listed in Appendix D with any other reference or references listed in Appendix D along with the knowledge of one of ordinary skill in the art to arrive at the inventions claims in the '041 Patent.

For example, and without limitation, the Asserted Claims of the '041 Patent would have been obvious to one of ordinary skill in the art in view of the following combinations:

(i) <u>Output Frame Rate Adjusting References: Hurst (D5), Aiba (D1), Ishii (D7), Morikawa (D11), Suzuki (D16), Kurita (D8), NCH (D13) Seikiguchi (D15), McCutchen (D10), or Walpole (D17) in combination with Gupta (D4), Aiba (D1), Ishii (D7), Morikawa (D11), Suzuki (D16), Kurita (D8), NCH (D13), or Magix Video Editor (D9)</u>

A POSITA would have had reason to combine Hurst (D5), Aiba (D1), Ishii (D7), Morikawa

(D11), Suzuki (D16), Kurita (D8), NCH (D13) Seikiguchi (D15), or Walpole (D17) with any one of Gupta (D4), Aiba (D1), Ishii (D7), Morikawa (D11), Suzuki (D16), Kurita (D8), NCH (D13), Magix Video Editor (D9) or any other reference ACT alleges fails to satisfy the limitation "an output frame rate specification unit configured to specify output frame rate of [first moving image data/second moving image data]" (*see* Claim 1[d], 6[d]), which offered ways to specify the output frame rate of moving image data based on factors such as the supported frame rate of a display device, the network throughput, and/or the currently available network bandwidth. Each of Hurst (D5), Aiba (D1), Ishii (D7), Morikawa (D11), Suzuki (D16), Kurita (D8), NCH (D13) Seikiguchi (D15), or Walpole (D17) concern processes to set and/or adjust the output frame rate of moving image data prior to reproduction or playback. Indeed, such processes were conventional as of the time these references were known. Hurst (D5), Aiba (D1), Ishii (D7), Morikawa (D11), Suzuki (D16), Kurita (D8), NCH (D13), Seikiguchi (D15), and Walpole (D17) provide additional means—not necessarily expressly present in all other references—by which the output frame rate is specified based on input from a user and/or the system. Because such additional means would have resulted in improved moving image data reproduction and avoided playback anomalies, a POSITA would have been motivated to combine these references in the interest of better user experience.

(ii) <u>Playback Speed References: Morikawa (D11), Suzuki (D16), Seikiguchi (D15), Aiba (D1), Kurita (D8), Hurst (D5), Ishii (D7), Magix Video Editor (D9), iMovie (D6), OpenShot (D14), Final Cut Pro (D3), in combination with Gupta (D4), McCutchen (D10), NCH (D13), Camtasia (D2), or Movie Maker (D12)</u>

A POSITA would have had reason to combine Morikawa (D11), Suzuki (D16), Seikiguchi (D15), Aiba (D1), Kurita (D8), Hurst (D5), Ishii (D7), Magix Video Editor (D9), iMovie (D6), OpenShot (D14), Final Cut Pro (D3), with any one of Gupta (D4), McCutchen (D10), NCH (D13),

Camtasia (D2), Movie Maker (D12) or or any other reference ACT alleges fails to satisfy the limitation "to specify a same playback speed for the first moving image data and second moving image data" (*see* Claim 1[e] 6[e]), which offered additional means to specify the playback speed based on information of an external device that receives the moving image data. Each of Morikawa (D11), Suzuki (D16), Seikiguchi (D15), Aiba (D1), Kurita (D8), Hurst (D5), Ishii (D7), Magix Video Editor (D9), iMovie (D6), OpenShot (D14), and Final Cut Pro (D3) concern processes to set and/or adjust the playback speed of moving image data prior to reproduction or playback. Indeed, such processes were conventional as of the time these references were known. Morikawa (D11), Suzuki (D16), Seikiguchi (D15), Aiba (D1), Kurita (D8), Hurst (D5), Ishii (D7), Magix Video Editor (D9), iMovie (D6), OpenShot (D14), and Final Cut Pro (D3) provide additional means—not necessarily expressly present in all other references—by which the playback speed is specified based on input from a user and/or the system. Because such additional means would have resulted in improved moving image data reproduction and avoided playback anomalies, a POSITA would have been motivated to combine these references in the interest of better user experience.

(iii) <u>First and Second Frame Rate References: Morikawa (D11), Suzuki (D16), Seikiguchi (D15), Walpole (D17), Aiba (D1), Kurita (D8), Hurst (D5), Ishii (D7), Magix Video Editor (D9), NCH (D13), or Camtasia (D2), in combination with iMovie (D6), OpenShot (D14), Final Cut Pro (D3), Gupta (D4), McCutchen (D10), NCH (D13), or Movie Maker (D12)</u>

A POSITA would have had reason to combine Morikawa (D11), Suzuki (D16), Seikiguchi (D15), Walpole (D17), Aiba (D1), Kurita (D8), Hurst (D5), Ishii (D7), Magix Video Editor (D9), NCH (D13), or Camtasia (D2), with any one of iMovie (D6), OpenShot (D14), Final Cut Pro (D3), Gupta (D4), McCutchen (D10), NCH (D13), Movie Maker (D12) or any other reference ACT alleges fails to satisfy the limitation "to be input first moving image data generate at a first frame

rate and second moving data image generataed at a second frame rate" (*see* Claim 1[a], 6[a]), which showed that a moving image data processing apparatus could input a moving image data at a first frame rate and input a second image data at a second frame rate was well-known at time of the alleged invention. Each of Morikawa (D11), Suzuki (D16), Seikiguchi (D15), Walpole (D17), Aiba (D1), Kurita (D8), Hurst (D5), Ishii (D7), Magix Video Editor (D9), NCH (D13), and Camtasia (D2) concern processes to set and/or adjust the first and second input frame rates and capture moving image data at different frame rates. Indeed, such processes were conventional as of the time these references were known. Morikawa (D11), Suzuki (D16), Seikiguchi (D15), Walpole (D17), Aiba (D1), Kurita (D8), Hurst (D5), Ishii (D7), Magix Video Editor (D9), NCH (D13), and Camtasia (D2) provide additional means—not necessarily expressly present in all other references—by which the input frame rate is specified based on input from a user and/or the system. Because such additional means would have resulted in improved moving image data reproduction and avoided playback anomalies, a POSITA would have been motivated to combine these references in the interest of better user experience.

c. Additional Combinations

For at least the reasons described above, it would have been obvious to one of ordinary skill in the art to combine each prior art reference listed in Appendix D with any other reference or references listed in Appendix D along with the knowledge of one of ordinary skill in the art to arrive at the inventions claims in the '041 Patent.[24] For example, and without limitation, the Asserted Claims of the '041 Patent would have been obvious to one of ordinary skill in the art in

[24] Further, Defendants are actively searching for information regarding at least the systems, devices, and/or inventions listed above in Table 2-D. It would have been obvious to one of ordinary skill in the art to combine each of the prior art references listed in Appendix D with any of the systems identified in Table 2-D. Defendants reserve the right to supplement or amend these contentions as discovery progresses, to the extent permitted by the Court.

view of the following combinations:

Patent No. or Title (Primary Inventor/Author)	In Combination with One or More of: (Patent No. or Title (Primary Inventor/Author))
Aiba	• Camtasia • Final Cut Pro • Gupta • Hurst • iMovie • Ishii • Kurita • MVE • McCutchen • Morikawa • MM • NCH Software • OpenShot • Sekiguchi • Suzuki • Walpole • The knowledge of a person of ordinary skill in the art.
Camtasia	• Aiba • Final Cut Pro • Gupta • Hurst • iMovie • Ishii • Kurita • MVE • McCutchen • Morikawa • MM • NCH Software • OpenShot • Sekiguchi • Suzuki • Walpole • The knowledge of a person of ordinary skill in the art.
Final Cut Pro	• Aiba • Camtasia • Gupta • Hurst • iMovie

Patent No. or Title (Primary Inventor/Author)	In Combination with One or More of: (Patent No. or Title (Primary Inventor/Author))
	• Ishii • Kurita • MVE • McCutchen • Morikawa • MM • NCH Software • OpenShot • Sekiguchi • Suzuki • Walpole • The knowledge of a person of ordinary skill in the art.
Gupta	• Aiba • Camtasia • Final Cut Pro • Hurst • iMovie • Ishii • Kurita • MVE • McCutchen • Morikawa • MM • NCH Software • OpenShot • Sekiguchi • Suzuki • Walpole • The knowledge of a person of ordinary skill in the art.
Hurst	• Aiba • Camtasia • Final Cut Pro • Gupta • iMovie • Ishii • Kurita • MVE • McCutchen • Morikawa • MM • NCH Software

Patent No. or Title (Primary Inventor/Author)	In Combination with One or More of: (Patent No. or Title (Primary Inventor/Author))
	• OpenShot • Sekiguchi • Suzuki • Walpole • The knowledge of a person of ordinary skill in the art.
iMovie	• Aiba • Camtasia • Final Cut Pro • Gupta • Hurst • Ishii • Kurita • MVE • McCutchen • Morikawa • MM • NCH Software • OpenShot • Sekiguchi • Suzuki • Walpole • The knowledge of a person of ordinary skill in the art.
Ishii	• Aiba • Camtasia • Final Cut Pro • Gupta • Hurst • iMovie • Kurita • MVE • McCutchen • Morikawa • MM • NCH Software • OpenShot • Sekiguchi • Suzuki • Walpole • The knowledge of a person of ordinary skill in the art.
Kurita	• Aiba • Camtasia

Patent No. or Title (Primary Inventor/Author)	In Combination with One or More of: (Patent No. or Title (Primary Inventor/Author))
	• Final Cut Pro • Gupta • Hurst • iMovie • Ishii • MVE • McCutchen • Morikawa • MM • NCH Software • OpenShot • Sekiguchi • Suzuki • Walpole • The knowledge of a person of ordinary skill in the art.
MVE	• Aiba • Camtasia • Final Cut Pro • Gupta • Hurst • iMovie • Ishii • Kurita • McCutchen • Morikawa • MM • NCH Software • OpenShot • Sekiguchi • Suzuki • Walpole • The knowledge of a person of ordinary skill in the art.
McCutchen	• Aiba • Camtasia • Final Cut Pro • Gupta • Hurst • iMovie • Ishii • Kurita • MVE

Patent No. or Title (Primary Inventor/Author)	In Combination with One or More of: (Patent No. or Title (Primary Inventor/Author))
	• Morikawa • MM • NCH Software • OpenShot • Sekiguchi • Suzuki • Walpole • The knowledge of a person of ordinary skill in the art.
Morikawa	• Aiba • Camtasia • Final Cut Pro • Gupta • Hurst • iMovie • Ishii • Kurita • MVE • McCutchen • MM • NCH Software • OpenShot • Sekiguchi • Suzuki • Walpole • The knowledge of a person of ordinary skill in the art.
MM	• Aiba • Camtasia • Final Cut Pro • Gupta • Hurst • iMovie • Ishii • Kurita • MVE • McCutchen • Morikawa • NCH Software • OpenShot • Sekiguchi • Suzuki • Walpole

Patent No. or Title (Primary Inventor/Author)	In Combination with One or More of: (Patent No. or Title (Primary Inventor/Author))
	• The knowledge of a person of ordinary skill in the art.
NCH Software	• Aiba • Camtasia • Final Cut Pro • Gupta • Hurst • iMovie • Ishii • Kurita • MVE • McCutchen • Morikawa • MM • OpenShot • Sekiguchi • Suzuki • Walpole • The knowledge of a person of ordinary skill in the art.
Openshot	• Aiba • Camtasia • Final Cut Pro • Gupta • Hurst • iMovie • Ishii • Kurita • MVE • McCutchen • Morikawa • MM • NCH Software • Sekiguchi • Suzuki • Walpole • The knowledge of a person of ordinary skill in the art.
Sekiguchi	• Aiba • Camtasia • Final Cut Pro • Gupta • Hurst • iMovie

Patent No. or Title (Primary Inventor/Author)	In Combination with One or More of: (Patent No. or Title (Primary Inventor/Author))
	• Ishii • Kurita • MVE • McCutchen • Morikawa • MM • NCH Software • Openshot • Suzuki • Walpole • The knowledge of a person of ordinary skill in the art.
Suzuki	• Aiba • Camtasia • Final Cut Pro • Gupta • Hurst • iMovie • Ishii • Kurita • MVE • McCutchen • Morikawa • MM • NCH Software • Openshot • Sekiguchi • Walpole • The knowledge of a person of ordinary skill in the art.
Walpole	• Aiba • Camtasia • Final Cut Pro • Gupta • Hurst • iMovie • Ishii • Kurita • MVE • McCutchen • Morikawa • MM • NCH Software

Patent No. or Title (Primary Inventor/Author)	In Combination with One or More of: (Patent No. or Title (Primary Inventor/Author))
	• Openshot • Sekiguchi • Suzuki • The knowledge of a person of ordinary skill in the art.

As mentioned above, Defendants have not yet completed their search or discovery concerning additional prior art. Moreover, the exemplary combinations are provided based on Defendants' current understanding of the Asserted Claims and Plaintiff's apparent view of the scope of those claims as shown, for example, in Plaintiff's Infringement Contentions. Further, a *Markman* Order has not yet been issued in this case. As such, Defendants' inclusion of exemplary combinations does not preclude them from identifying other invalidating combinations as appropriate, and Defendants reserve the right to identify additional specific combinations as well as to detail and explain such combinations.

5. U.S. Patent No. 9,986,303

Pursuant to P.R. 3-3(a) and (b), Defendants identify in Appendix E the prior art references that render obvious the Asserted Claims of the '303 Patent and include below exemplary combinations showing the obviousness of the '303 Patent Asserted Claims in view of the prior art. The Court has not yet construed the claims and therefore the meaning of the terms in the '303 Patent Asserted Claims has yet to be resolved by the Court. The support identified herein and in Appendix E may be responsive at least in part to Plaintiff's infringement contentions, with which Defendants disagree. To the extent Plaintiff contends that an element is not disclosed in any one of the anticipatory references described in Appendix E, the limitation would have been obvious in light of the disclosures within the reference and the knowledge of one of ordinary skill in the art

at the time of the ’303 Patent. Moreover, to the extent Plaintiff contends that an element is not disclosed in any one of the anticipatory references described in Appendix E, such reference may be combined with any other references listed in Appendix E for such element, thereby rendering the claims invalid for obviousness.

To the extent a finder of fact determines that a limitation of any of the ’303 Patent Asserted Claims is not disclosed by one of the references identified above pursuant to P.R. 3-3(a), the claim is nevertheless unpatentable as obvious because they contain nothing that constitutes a patentable innovation. To the extent a finder of fact determines that a limitation of the ’303 Patent Asserted Claims is not anticipated, it does not go beyond combining familiar elements according to known methods to achieve predictable results or does more than choose between clear alternatives known to those of ordinary skill in the art.

a. Obviousness Rationale and Motivations to Combine

For at least the reasons described in these contentions, it would have been obvious to one of ordinary skill in the art to combine any of a number of prior art references, including any combination of those prior art references identified in Appendix E along with the knowledge of one of ordinary skill in the art to meet the limitations of the ’303 Patent Asserted Claims. Moreover, as mentioned above, Defendants have not yet completed their search or discovery concerning additional prior art. As such, Defendants’ inclusion of exemplary combinations does not preclude them from identifying other invalidating combinations as appropriate, and Defendants reserve the right to identify additional specific combinations as well as to detail and explain such combinations.

No More Than Ordinary Variations of Prior Art; No Unexpected Results: To the extent not anticipated, the ’303 Patent Asserted Claims represent no more than the result of

ordinary variations of the prior art. Defendants further believe that no showing of a specific motivation to combine prior art is required to combine the references disclosed above and in the attached charts, as each combination of art would have no unexpected results, and at most would simply represent a known alternative to one of ordinary skill in the art. *See KSR Int'l Co. v. Teleflex, Inc.*, 550 U.S. 398, 415-16 (2007) (rejecting the Federal Circuit's "rigid" application of the teaching, suggestion, or motivation to combine test, instead espousing an "expansive and flexible" approach); *Apple Inc. v. Samsung Elecs. Co*., 839 F.3d 1034, 1058 (Fed. Cir. 2016); *Intercontinental Great Brands LLC v. Kellogg N. Am. Co*., 869 F.3d 1336, 1344 (Fed. Cir. 2017). Indeed, the Supreme Court held that a person of ordinary skill in the art is "a person of ordinary creativity, not an automaton" and "in many cases a person of ordinary skill in the art will be able to fit the teachings of multiple patents together like pieces of a puzzle." *Id.* at 420-21. Nevertheless, in addition to the information contained elsewhere in these contentions, Defendants identify motivation and reason to combine the cited art.

Predictable Results; Obvious to Try: One or more combinations of the prior art references identified in Appendix E would have been obvious because these references would have been combined using: known methods to yield predictable results; known techniques in the same way; a simple substitution of one known, equivalent element for another to obtain predictable results; and/or a teaching, suggestion, or motivation in the prior art generally. In addition, it would have been obvious to try combining the prior art references identified above because there were only a finite number of predictable solutions and/or because known work in one field of endeavor prompted variations based on predictable design incentives and/or market forces either in the same field or a different one. Further, the combinations of the prior art references identified in Appendix E would have been obvious because the combinations represent known potential options with a

reasonable expectation of success.

Interrelated Teachings: Additional evidence that there would have been a motivation to combine the prior art references identified above includes the interrelated teachings of multiple prior art references; common authorship; the effects of demands known to the design community or present in the marketplace; the existence of a known problem for which there was an obvious solution encompassed by the '303 Patent Asserted Claims; the existence of a known need or problem in the field of the endeavor at the time of the alleged invention(s); and the background knowledge that would have been possessed by a person having ordinary skill in the art.

Summary of Motivations to Combine: Thus, the motivation to combine the teachings of the prior art references disclosed in Appendix E is found in the references themselves and also in: (1) the nature of the problem being solved; (2) the express, implied and inherent teachings of the prior art; (3) the knowledge of persons of ordinary skill in the art; (4) the predictable results obtained in combining the different elements of the prior art; (5) the predictable results obtained in simple substitution of one known element for another; (6) the use of a known technique to improve similar devices, methods, or products in the same way; (7) the predictable results obtained in applying a known technique to a known device, method, or product ready for improvement; (8) the finite number of identified predictable solutions that had a reasonable expectation of success; and (9) known work in various technological fields that could be applied to the same or different technological fields based on design incentives or other market forces.

Same Area of Technology: Additionally, it would be obvious to one of ordinary skill in the art to consult and/or combine any of the prior art listed in Appendix E because all of these references relate to the same area of technology and/or are from analogous art. The '303 Patent Asserted Claims are directed to receiving both basic video image data and supplemental video

image data in which pictures are out of order and using both the basic video image data and supplemental video image data to decode and reconstruct the video. ’303 Patent at Abstract, 2:15-32. The ’303 Patent Asserted Claims merely unite old elements, well known in the field, with no change in their respective function or result. Given the interrelated teachings of the prior art, the effects of demands known to the design community or present in the marketplace, and the background knowledge possessed by a person having ordinary skill in the art, it would have been obvious for one of ordinary skill in the art to combine these familiar elements, disclosed and/or embodied in the prior art listed above to practice the ’303 Patent Asserted Claims.

Same Technical Issues: A person of ordinary skill would have been motivated to combine the above prior art based on his/her knowledge, the nature of the problem to be solved, and the teachings of the prior art. The identified prior art addresses the same or similar technical issues and suggests the same or similar solutions to those issues. Moreover, some of the prior art refer to or discuss other prior art, illustrating the close technical relationship among the prior art. For the ’303 Patent, one of ordinary skill in the art would have been motivated to combine known prior art solutions described in these references relating to receiving and decoding video image data, including using both supplemental video image data and basic video image data to reconstruct the video.

Demand and Market Forces: For example, market forces suggested a demand for improved decoding and reconstruction of video using both supplemental and basic video image data, and thus one of skill in the art would have thought to combine or modify references that described known methods that one of skill in the art would have recognized as offering improvements to solutions of that time.

Known Elements; Obvious to Try: Moreover, many of the claim elements were already

known as admitted by the applicants in the patent specification. These elements represented design choices available to a person of ordinary skill. When there is a design need or market pressure to solve a problem such as identified previously and/or described in the '303 Patent, and there are a finite number of identified, predictable solutions, a person of ordinary skill would be motivated to combine the known options that are within his or her technical grasp. For the '303 Patent, there are a finite number of approaches for receiving and decoding video image data, including using both supplemental video image data and basic video image data to reconstruct the video. For example, as of the priority date of the '303 Patent, a POSITA would have been very familiar with basic elements of the '303 Patent's claims such as receiving both basic video image data and supplemental video image data in which pictures are out of order and using both the basic video image data and supplemental video image data to decode and reconstruct the video. '303 Patent at Abstract, 2:15-32, Claim 1. Such elements were within the knowledge of a POSITA, whether or not disclosed in any particular reference, and the inclusion of such elements in the '303 Patent's claims does not render them novel or non-obvious.

Additional evidence that there would have been a motivation to combine the prior art references identified above includes the interrelated teachings of multiple prior art references; common authorship; the effects of demands known to the design community or present in the marketplace; the existence of a known problem for which there was an obvious solution encompassed by the '303 Patent Asserted Claims; the existence of a known need or problem in the field of the endeavor at the time of the alleged invention(s); and the background knowledge that would have been possessed by a person having ordinary skill in the art.

Thus, the motivation to combine the teachings of the prior art references disclosed in Appendix E is found in the references themselves and also in: (1) the nature of the problem being

solved; (2) the express, implied and inherent teachings of the prior art; (3) the knowledge of persons of ordinary skill in the art; (4) the predictable results obtained in combining the different elements of the prior art; (5) the predictable results obtained in simple substitution of one known element for another; (6) the use of a known technique to improve similar devices, methods, or products in the same way; (7) the predictable results obtained in applying a known technique to a known device, method, or product ready for improvement; (8) the finite number of identified predictable solutions that had a reasonable expectation of success; and (9) known work in various technological fields that could be applied to the same or different technological fields based on design incentives or other market forces.

Additionally, it would be obvious to one of ordinary skill in the art to consult and/or combine any of the prior art listed in Appendix E because all of these references relate to the same area of technology and/or are from analogous art. The ’303 Patent Asserted Claims are directed to receiving both basic video image data and supplemental video image data in which pictures are out of order and using both the basic video image data and supplemental video image data to decode and reconstruct the video. ’303 Patent at Abstract, 2:15-32; claim 1. The ’303 Patent Asserted Claims merely unite old elements, well known in the field, with no change in their respective function or result. Given the interrelated teachings of the prior art, the effects of demands known to the design community or present in the marketplace, and the background knowledge possessed by a person having ordinary skill in the art, it would have been obvious for one of ordinary skill in the art to combine these familiar elements, disclosed and/or embodied in the prior art listed above to practice the ’303 Patent Asserted Claims.

In addition to the specific examples provided above, Defendants reserve the right to rely on the disclosures of the references listed in Appendix D for additional motivation to combine.

These examples of combinations are given merely to illustrate various motivations to combine and are not intended to provide an exhaustive list of every possible combination to which the motivation may apply. Defendants reserve the right to contend that the motivations to combine provided herein apply to other combinations at the appropriate time, e.g., in expert reports regarding invalidity. To the extent one or more of identified combinations is posed as a combination of only two references, it does not indicate that the two references that are being combined for one purpose could not be joined by a third reference (or more additional references) whose combination serves the same or a different purpose. Indeed, many of the features recited in the asserted claims are componentized features/functions whereby the feature could be implemented using teachings from another source while not interfering with additional features. For that reason, a POSITA may have reasonably looked to and been motivated to combine three or more references in order to achieve a specific outcome.

b. Combinations

For example, and without limitation, in addition to the reasons outlined above, the Asserted Claims of the '303 Patent would have been obvious to one of ordinary skill in the art in view of the following combinations:

(i) Scalable Video References: Demircin (E4), Choi (E2), Cilli (E3), Kesaniemi (E5), Kimoto (E6), Rossato (E7), Ryu (E8), Senbel (E10), Su (E11), Tillman (E14), and Wada (E16) in combination with Chen (E1), Schaar (E9), Sugiyama (E12), Suh (E13), Ugur (E15), Karczewicz (E17), HTC Touch Cruise (E18), HTC Touch Cruise (E19), Adobe FP9 (E20), Qualcomm MSM7200 Chip Solution (E21), Horizon Hz7220 Chip Solution (E22), Honeywell DVR (E23), iPhone (E24), Roku Product (E26), Roku System (E28), Apple TV (E25) , FFmpeg (E27), H.262 (2000), H.263 (2005), and H.264 (2005),

A POSITA would have had reason to combine : Demircin (E4), Choi (E2), Cilli (E3), Kesaniemi (E5), Kimoto (E6), Rossato (E7), Ryu (E8), Senbel (E10), Su (E11), Tillman (E14),

and Wada (E16) with any one of Chen (E1), Schaar (E9), Sugiyama (E12), Suh (E13), Ugur (E15), Karczewicz (E17), HTC Touch Cruise (E18), HTC Touch Cruise (E19), Adobe FP9 (E20), Qualcomm MSM7200 Chip Solution (E21), Horizon Hz7220 Chip Solution (E22), Honeywell DVR (E23), iPhone (E24), Roku Product (E26), Roku System (E28), Apple TV (E25) , FFmpeg (E27), H.262 (2000), H.263 (2005), and H.264 (2005), all of which relate to systems and methods for decoding and reconstruction of scalable video in order to achieve the best-possible tradeoffs between performance, latency and visual quality. Each of Demircin (E4), Choi (E2), Cilli (E3), Kesaniemi (E5), Kimoto (E6), Rossato (E7), Ryu (E8), Senbel (E10) Su (E11), Tillman (E14), Wada (E16) concern receiving, decoding, and reconstructing basic video images representing low-quality video that can be reconstructed into high-quality video by receiving, decoding, and reconstructing ehnhacement video images with the basic video images. Indeed, such processes and systems were conventional as of the time these references were known. Demircin (E4), Choi (E2), Cilli (E3), Kesaniemi (E5), Kimoto (E6), Rossato (E7), Ryu (E8), Senbel (E10) Su (E11), Tillman (E14), Wada (E16) provide means—not necessarily expressly present in all other references—for processing a bitstream, including decoding and reconstructing basic video images; doing the same with both basic and enhancement video images; and increasing or decreasing the visual quality of the output video to achieve the best-possible tradeoff between performance, latency, and visual quality. A POSITA would have understood that the systems and methods for applying decoding and reconstruction of scalable video to achieve the best-possible tradeoff between performance, latency, and visual quality (such as those taught in Demircin (E4), Choi (E2), Cilli (E3), Kesaniemi (E5), Kimoto (E6), Rossato (E7), Ryu (E8), Senbel (E10), Su (E11), Tillman (E14), and Wada (E16)) were intended to be incorporated into additional codecs and systems, which Demircin (E4) acknowledges. Given that Demircin (E4), Choi (E2), Cilli (E3),

Kesaniemi (E5), Kimoto (E6), Rossato (E7), Ryu (E8), Senbel (E10), Su (E11), Tillman (E14), and Wada (E16) describe well-known codec functionality (including processing and decoding of scalable video in response to available performance, latency, and visual quality) used for reconstructing a video stream in various visual qualities, a POSITA would have been motivated to combine the teachings of these references. The combination would apply known techniques to apply applying decoding and reconstruction of scalable video, to codecs, systems, and methods that were ready for improvement, in order to yield predictable results. The combination would further be "obvious to try," because it would involve simple design choices from a finite number of identified, predictable solutions, with a reasonable expectation of success.

(ii) Prioritizing Enhancement Video Data Before Basic Video Data References: Chen (E1), Kimoto (E6), Rossato (E7), Ryu (E8), and Wada (E16) in combination with Karczewicz (E17), HTC Touch Cruise (E18), Roku Product (E26), Roku System (E28), HTC Touch Cruise (E19), Adobe FP9 (E20), Qualcomm MSM7200 Chip Solution (E21), Horizon Hz7220 Chip Solution (E22), Honeywell DVR (E23), iPhone (E24), Apple TV (E25) FFmpeg (E27), H.262 (2000), H.263 (2005), H.264 (2005), Choi (E2), Cilli (E3), Demircin (E4), Kesaniemi (E5), Schaar (E9), Senbel (E10), Su (E11), Sugiyama (E12), Suh (E13), Tillman (E14), and Ugur (E15)

A POSITA would have had reason to combine Chen (E1), Kimoto (E6), Rossato (E7), Ryu (E8), and Wada (E16) with any one of Karczewicz (E17), HTC Touch Cruise (E18), HTC Touch Cruise (E19), Adobe FP9 (E20), Qualcomm MSM7200 Chip Solution (E21), Horizon Hz7220 Chip Solution (E22), Honeywell DVR (E23), iPhone (E24), Apple TV (E25) FFmpeg (E27), H.262 (2000), H.263 (2005), H.264 (2005), Roku Product (E26), Roku System (E28), Choi (E2), Cilli (E3), Demircin (E4), Kesaniemi (E5), Schaar (E9), Senbel (E10), Su (E11), Sugiyama (E12), Suh (E13), Tillman (E14), and Ugur (E15), all of which relate to systems and methods for decoding and reconstructing low- and high-quality video in a bitstream, including the use of. Each of Chen

(E1), Kimoto (E6), Rossato (E7), Ryu (E8), and Wada (E16) concern receiving, decoding, and . Indeed, such processes and systems were conventional as of the time these references were known Chen (E1), Kimoto (E6), Rossato (E7), Ryu (E8), and Wada (E16) provide means—not necessarily expressly present in all other references—for processing a bitstream, including decoding and reconstructing video and images within the stream. A POSITA would have understood that the systems and methods for applying decoding and reconstruction of video streams (such as those taught in Chen (E1), Kimoto (E6), Rossato (E7), Ryu (E8), and Wada (E16)) were intended to be incorporated into additional codecs and systems. Given that Karczewicz (E17), HTC Touch Cruise (E18), HTC Touch Cruise (E19), Adobe FP9 (E20), Qualcomm MSM7200 Chip Solution (E21), Horizon Hz7220 Chip Solution (E22), Honeywell DVR (E23), iPhone (E24), Apple TV (E25) FFmpeg (E27), H.262 (2000), H.263 (2005), H.264 (2005), Roku Product (E26), Roku System (E28), Choi (E2), Cilli (E3), Demircin (E4), Kesaniemi (E5), Schaar (E9), Senbel (E10), Su (E11), Sugiyama (E12), Suh (E13), Tillman (E14), and Ugur (E15) describe well-known codec functionality (including processing and decoding of video within received bitstreams), systems, and methods used for decoding and reconstructing a video stream by prioritizing supplementary video image data over basic video image data, a POSITA would have been motivated to combine the teachings of these references. The combination would apply known techniques to apply applying decoding and reconstruction video bitstreams using basic and supplementary video image data to codecs, systems, and methods that were ready for improvement, in order to yield predictable results. The combination would further be "obvious to try," because it would involve simple design choices from a finite number of identified, predictable solutions, with a reasonable expectation of success.

c. Additional Combinations

For at least the reasons described above, it would have been obvious to one of ordinary skill in the art to combine each prior art reference listed in Appendix E with any other reference or references listed in Appendix E along with the knowledge of one of ordinary skill in the art to arrive at the inventions claims in the '303 Patent.[25] For example, and without limitation, the Asserted Claims of the '303 Patent would have been obvious to one of ordinary skill in the art in view of the following combinations:

Patent No. or Title (Primary Inventor/Author)	**In Combination with One or More of: (Patent No. or Title (Primary Inventor/Author))**
Su	• Tillman • Wada • Chen • Choi • Cilli • Demircin • Kesaniemi • Kimoto • Rossato • Ryu • Van Der Schaar • Senbel • Sugiyama • Suh • Ugur • Karczewicz • HTC Touch Cruiser • HTC Touch Dual • Adobe FP9 • MSM7200 • Hz7220 • HRDPX H.264 DVR • iPhone • Apple TV

[25] Further, Defendants are actively searching for information regarding at least the systems, devices, and/or inventions listed above in Table 2-E. It would have been obvious to one of ordinary skill in the art to combine each of the prior art references listed in Appendix E with any of the systems identified in Table 2-E. Defendants reserve the right to supplement or amend these contentions as discovery progresses, to the extent permitted by the Court.

Patent No. or Title (Primary Inventor/Author)	In Combination with One or More of: (Patent No. or Title (Primary Inventor/Author))
	• Roku Product • Roku System • FFmpeg • The knowledge of a person of ordinary skill in the art.
Tillman	• Su • Wada • Chen • Choi • Cilli • Demircin • Kesaniemi • Kimoto • Rossato • Ryu • Van Der Schaar • Senbel • Sugiyama • Suh • Ugur • Karczewicz • HTC Touch Cruiser • HTC Touch Dual • Adobe FP9 • MSM7200 • Hz7220 • HRDPX H.264 DVR • iPhone • Apple TV • Roku Product • Roku System FFmpeg • The knowledge of a person of ordinary skill in the art.
Wada	• Su • Tillman • Chen • Choi • Cilli • Demircin • Kesaniemi • Kimoto • Rossato • Ryu

Patent No. or Title (Primary Inventor/Author)	In Combination with One or More of: (Patent No. or Title (Primary Inventor/Author))
	• Van Der Schaar • Senbel • Sugiyama • Suh • Ugur • Karczewicz • HTC Touch Cruiser • HTC Touch Dual • Adobe FP9 • MSM7200 • Hz7220 • HRDPX H.264 DVR • iPhone • Apple TV • Roku Product • Roku System FFmpeg • The knowledge of a person of ordinary skill in the art.
Chen	• Su • Tillman • Wada • Choi • Cilli • Demircin • Kesaniemi • Kimoto • Rossato • Ryu • Van Der Schaar • Senbel • Sugiyama • Suh • Ugur • Karczewicz • HTC Touch Cruiser • HTC Touch Dual • Adobe FP9 • MSM7200 • Hz7220 • HRDPX H.264 DVR • iPhone • Apple TV

Patent No. or Title (Primary Inventor/Author)	In Combination with One or More of: (Patent No. or Title (Primary Inventor/Author))
	• Roku Product • Roku System FFmpeg • The knowledge of a person of ordinary skill in the art.
Choi	• Su • Tillman • Wada • Chen • Cilli • Demircin • Kesaniemi • Kimoto • Rossato • Ryu • Van Der Schaar • Senbel • Sugiyama • Suh • Ugur • Karczewicz • HTC Touch Cruiser • HTC Touch Dual • Adobe FP9 • MSM7200 • Hz7220 • HRDPX H.264 DVR • iPhone • Apple TV • Roku Product • Roku System FFmpeg • The knowledge of a person of ordinary skill in the art.
Cilli	• Su • Tillman • Wada • Chen • Choi • Demircin • Kesaniemi • Kimoto • Rossato • Ryu • Van Der Schaar

Patent No. or Title (Primary Inventor/Author)	In Combination with One or More of: (Patent No. or Title (Primary Inventor/Author))
	• Senbel • Sugiyama • Suh • Ugur • Karczewicz • HTC Touch Cruiser • HTC Touch Dual • Adobe FP9 • MSM7200 • Hz7220 • HRDPX H.264 DVR • iPhone • Apple TV • Roku Product • Roku System FFmpeg • The knowledge of a person of ordinary skill in the art.
Demircin[26]	• Su • Tillman • Wada • Chen • Choi • Cilli • Kesaniemi • Kimoto • Rossato • Ryu • Van Der Schaar • Senbel • Sugiyama • Suh • Ugur • Karczewicz • HTC Touch Cruiser • HTC Touch Dual • Adobe FP9 • MSM7200 • Hz7220 • HRDPX H.264 DVR

[26] Defendants are providing notice of their intent to rely on each invalidity ground presented in IPR2024-00327, including Ground 1 that Demircin renders Claims 1-2 obvious.

Patent No. or Title (Primary Inventor/Author)	In Combination with One or More of: (Patent No. or Title (Primary Inventor/Author))
	• iPhone • Apple TV • Roku Product • Roku System FFmpeg • The knowledge of a person of ordinary skill in the art.
Kesaniemi	• Su • Tillman • Wada • Chen • Choi • Cilli • Demircin • Kimoto • Rossato • Ryu • Van Der Schaar • Senbel • Sugiyama • Suh • Ugur • Karczewicz • HTC Touch Cruiser • HTC Touch Dual • Adobe FP9 • MSM7200 • Hz7220 • HRDPX H.264 DVR • iPhone • Apple TV • Roku Product • Roku System FFmpeg • The knowledge of a person of ordinary skill in the art.
Kimoto[27]	• Su • Tillman • Wada • Chen • Choi • Cilli

[27] Defendants are providing notice of their intent to rely on each invalidity ground presented in IPR2024-00327, including Ground 2 that Kimoto in view of Demircin renders Claim 1 obvious.

Patent No. or Title (Primary Inventor/Author)	In Combination with One or More of: (Patent No. or Title (Primary Inventor/Author))
	• Demircin • Kesaniemi • Rossato • Ryu • Van Der Schaar • Senbel • Sugiyama • Suh • Ugur • Karczewicz • HTC Touch Cruiser • HTC Touch Dual • Adobe FP9 • MSM7200 • Hz7220 • HRDPX H.264 DVR • iPhone • Apple TV • Roku Product • Roku System • FFmpeg • The knowledge of a person of ordinary skill in the art.
Rossato	• Su • Tillman • Wada • Chen • Choi • Cilli • Demircin • Kesaniemi • Kimoto • Ryu • Van Der Schaar • Senbel • Sugiyama • Suh • Ugur • Karczewicz • HTC Touch Cruiser • HTC Touch Dual • Adobe FP9

Patent No. or Title (Primary Inventor/Author)	In Combination with One or More of: (Patent No. or Title (Primary Inventor/Author))
	• MSM7200 • Hz7220 • HRDPX H.264 DVR • iPhone • Apple TV • Roku Product • Roku System FFmpeg • The knowledge of a person of ordinary skill in the art.
Ryu	• Su • Tillman • Wada • Chen • Choi • Cilli • Demircin • Kesaniemi • Kimoto • Rossato • Van Der Schaar • Senbel • Sugiyama • Suh • Ugur • Karczewicz • HTC Touch Cruiser • HTC Touch Dual • Adobe FP9 • MSM7200 • Hz7220 • HRDPX H.264 DVR • iPhone • Apple TV • Roku Product • Roku System FFmpeg • The knowledge of a person of ordinary skill in the art.
Van Der Schaar	• Su • Tillman • Wada • Chen • Choi • Cilli

Patent No. or Title (Primary Inventor/Author)	In Combination with One or More of: (Patent No. or Title (Primary Inventor/Author))
	• Demircin • Kesaniemi • Kimoto • Rossato • Ryu • Senbel • Sugiyama • Suh • Ugur • Karczewicz • HTC Touch Cruiser • HTC Touch Dual • Adobe FP9 • MSM7200 • Hz7220 • HRDPX H.264 DVR • iPhone • Apple TV • Roku Product • Roku System FFmpeg • The knowledge of a person of ordinary skill in the art.
Senbel	• Su • Tillman • Wada • Chen • Choi • Cilli • Demircin • Kesaniemi • Kimoto • Rossato • Ryu • Van Der Schaar • Sugiyama • Suh • Ugur • Karczewicz • HTC Touch Cruiser • HTC Touch Dual • Adobe FP9 • MSM7200

Patent No. or Title (Primary Inventor/Author)	In Combination with One or More of: (Patent No. or Title (Primary Inventor/Author))
	• Hz7220 • HRDPX H.264 DVR • iPhone • Apple TV • Roku Product • Roku System FFmpeg • The knowledge of a person of ordinary skill in the art.
Sugiyama	• Su • Tillman • Wada • Chen • Choi • Cilli • Demircin • Kesaniemi • Kimoto • Rossato • Ryu • Van Der Schaar • Senbel • Suh • Ugur • Karczewicz • HTC Touch Cruiser • HTC Touch Dual • Adobe FP9 • MSM7200 • Hz7220 • HRDPX H.264 DVR • iPhone • Apple TV • Roku Product • Roku System FFmpeg • The knowledge of a person of ordinary skill in the art.
Suh	• Su • Tillman • Wada • Chen • Choi • Cilli • Demircin

Patent No. or Title (Primary Inventor/Author)	In Combination with One or More of: (Patent No. or Title (Primary Inventor/Author))
	• Kesaniemi • Kimoto • Rossato • Ryu • Van Der Schaar • Senbel • Sugiyama • Ugur • Karczewicz • HTC Touch Cruiser • HTC Touch Dual • Adobe FP9 • MSM7200 • Hz7220 • HRDPX H.264 DVR • iPhone • Apple TV • Roku Product • Roku System FFmpeg • The knowledge of a person of ordinary skill in the art.
Ugur	• Su • Tillman • Wada • Chen • Choi • Cilli • Demircin • Kesaniemi • Kimoto • Rossato • Ryu • Van Der Schaar • Senbel • Sugiyama • Suh • Karczewicz • HTC Touch Cruiser • HTC Touch Dual • Adobe FP9 • MSM7200 • Hz7220

Patent No. or Title (Primary Inventor/Author)	In Combination with One or More of: (Patent No. or Title (Primary Inventor/Author))
	• HRDPX H.264 DVR • iPhone • Apple TV • Roku Product • Roku System FFmpeg • The knowledge of a person of ordinary skill in the art.
Karczewicz	• Su • Tillman • Wada • Chen • Choi • Cilli • Demircin • Kesaniemi • Kimoto • Rossato • Ryu • Van Der Schaar • Senbel • Sugiyama • Suh • Ugur • HTC Touch Cruiser • HTC Touch Dual • Adobe FP9 • MSM7200 • Hz7220 • HRDPX H.264 DVR • iPhone • Apple TV • Roku Product • Roku System FFmpeg • The knowledge of a person of ordinary skill in the art.
HTC Touch Cruiser	• Su • Tillman • Wada • Chen • Choi • Cilli • Demircin • Kesaniemi

Patent No. or Title (Primary Inventor/Author)	In Combination with One or More of: (Patent No. or Title (Primary Inventor/Author))
	• Kimoto • Rossato • Ryu • Van Der Schaar • Senbel • Sugiyama • Suh • Ugur • Karczewicz • HTC Touch Dual • Adobe FP9 • MSM7200 • Hz7220 • HRDPX H.264 DVR • iPhone • Apple TV • Roku Product • Roku System FFmpeg • The knowledge of a person of ordinary skill in the art.
HTC Touch Dual	• Su • Tillman • Wada • Chen • Choi • Cilli • Demircin • Kesaniemi • Kimoto • Rossato • Ryu • Van Der Schaar • Senbel • Sugiyama • Suh • Ugur • Karczewicz • HTC Touch Cruiser • Adobe FP9 • MSM7200 • Hz7220 • HRDPX H.264 DVR

Patent No. or Title (Primary Inventor/Author)	In Combination with One or More of: (Patent No. or Title (Primary Inventor/Author))
	• iPhone • Apple TV • Roku Product • Roku System FFmpeg • The knowledge of a person of ordinary skill in the art.
Adobe FP9	• Su • Tillman • Wada • Chen • Choi • Cilli • Demircin • Kesaniemi • Kimoto • Rossato • Ryu • Van Der Schaar • Senbel • Sugiyama • Suh • Ugur • Karczewicz • HTC Touch Cruiser • HTC Touch Dual • MSM7200 • Hz7220 • HRDPX H.264 DVR • iPhone • Apple TV • Roku Product • Roku System FFmpeg • The knowledge of a person of ordinary skill in the art.
MSM7200	• Su • Tillman • Wada • Chen • Choi • Cilli • Demircin • Kesaniemi • Kimoto

Patent No. or Title (Primary Inventor/Author)	In Combination with One or More of: (Patent No. or Title (Primary Inventor/Author))
	• Rossato • Ryu • Van Der Schaar • Senbel • Sugiyama • Suh • Ugur • Karczewicz • HTC Touch Cruiser • HTC Touch Dual • Adobe FP9 • Hz7220 • HRDPX H.264 DVR • iPhone • Apple TV • Roku Product • Roku System FFmpeg • The knowledge of a person of ordinary skill in the art.
Hz7220	• Su • Tillman • Wada • Chen • Choi • Cilli • Demircin • Kesaniemi • Kimoto • Rossato • Ryu • Van Der Schaar • Senbel • Sugiyama • Suh • Ugur • Karczewicz • HTC Touch Cruiser • HTC Touch Dual • Adobe FP9 • MSM7200 • HRDPX H.264 DVR • iPhone

Patent No. or Title (Primary Inventor/Author)	In Combination with One or More of: (Patent No. or Title (Primary Inventor/Author))
	• Apple TV • Roku Product • Roku System FFmpeg • The knowledge of a person of ordinary skill in the art.
HRDPX H.264 DVR	• Su • Tillman • Wada • Chen • Choi • Cilli • Demircin • Kesaniemi • Kimoto • Rossato • Ryu • Van Der Schaar • Senbel • Sugiyama • Suh • Ugur • Karczewicz • HTC Touch Cruiser • HTC Touch Dual • Adobe FP9 • MSM7200 • Hz7220 • iPhone • Apple TV • Roku Product • Roku System FFmpeg • The knowledge of a person of ordinary skill in the art.
iPhone	• Su • Tillman • Wada • Chen • Choi • Cilli • Demircin • Kesaniemi • Kimoto • Rossato

Patent No. or Title (Primary Inventor/Author)	In Combination with One or More of: (Patent No. or Title (Primary Inventor/Author))
	• Ryu • Van Der Schaar • Senbel • Sugiyama • Suh • Ugur • Karczewicz • HTC Touch Cruiser • HTC Touch Dual • Adobe FP9 • MSM7200 • Hz7220 • HRDPX H.264 DVR • Apple TV • Roku Product • Roku System FFmpeg • The knowledge of a person of ordinary skill in the art.
Apple TV	• Su • Tillman • Wada • Chen • Choi • Cilli • Demircin • Kesaniemi • Kimoto • Rossato • Ryu • Van Der Schaar • Senbel • Sugiyama • Suh • Ugur • Karczewicz • HTC Touch Cruiser • HTC Touch Dual • Adobe FP9 • MSM7200 • Hz7220 • HRDPX H.264 DVR • iPhone

Patent No. or Title (Primary Inventor/Author)	In Combination with One or More of: (Patent No. or Title (Primary Inventor/Author))
	• Roku Product • Roku System FFmpeg • The knowledge of a person of ordinary skill in the art.
Roku Product	• Su • Tillman • Wada • Chen • Choi • Cilli • Demircin • Kesaniemi • Kimoto • Rossato • Ryu • Van Der Schaar • Senbel • Sugiyama • Suh • Ugur • Karczewicz • HTC Touch Cruiser • HTC Touch Dual • Adobe FP9 • MSM7200 • Hz7220 • HRDPX H.264 DVR • iPhone • Apple TV • Roku System • FFmpeg • The knowledge of a person of ordinary skill in the art.
FFmpeg	• Su • Tillman • Wada • Chen • Choi • Cilli • Demircin • Kesaniemi • Kimoto • Rossato

Patent No. or Title (Primary Inventor/Author)	In Combination with One or More of: (Patent No. or Title (Primary Inventor/Author))
	• Ryu • Van Der Schaar • Senbel • Sugiyama • Suh • Ugur • Karczewicz • HTC Touch Cruiser • HTC Touch Dual • Adobe FP9 • MSM7200 • Hz7220 • HRDPX H.264 DVR • iPhone • Apple TV • Roku Product • Roku System The knowledge of a person of ordinary skill in the art.
Roku System	• Su • Tillman • Wada • Chen • Choi • Cilli • Demircin • Kesaniemi • Kimoto • Rossato • Ryu • Van Der Schaar • Senbel • Sugiyama • Suh • Ugur • Karczewicz • HTC Touch Cruiser • HTC Touch Dual • Adobe FP9 • MSM7200 • Hz7220 • HRDPX H.264 DVR

Patent No. or Title (Primary Inventor/Author)	In Combination with One or More of: (Patent No. or Title (Primary Inventor/Author))
	• iPhone • Apple TV • Roku Product • FFmpeg • The knowledge of a person of ordinary skill in the art.
IPR2024-00327 Petition	• Ground 1: Demircin • Ground 2: Kimoto in view of Demircin

As mentioned above, Defendants have not yet completed their search or discovery concerning additional prior art. Moreover, the exemplary combinations are provided based on Defendants' current understanding of the Asserted Claims and Plaintiff's apparent view of the scope of those claims as shown, for example, in Plaintiff's Infringement Contentions. Further, a *Markman* Order has not yet been issued in this case. As such, Defendants' inclusion of exemplary combinations does not preclude them from identifying other invalidating combinations as appropriate, and Defendants reserve the right to identify additional specific combinations as well as to detail and explain such combinations.

6. U.S. Patent No. 10,218,995

Pursuant to P.R. 3-3(a) and (b), Defendants identify in Appendix F prior art references that render obvious the Asserted Claims of the '995 Patent and include below exemplary combinations showing the obviousness of the '995 Patent Asserted Claims in view of the prior art. To the extent Plaintiff contends that an element is not disclosed in any one of the anticipatory references described in Appendix F, the limitation would have been obvious in light of the disclosures within the reference and the knowledge of one of ordinary skill in the art at the time of the '995 Patent. Moreover, to the extent Plaintiff contends that an element is not disclosed in any one of the anticipatory references described in Appendix F, such reference may be combined with any other references listed in Appendix F for such element, thereby rendering the claims invalid for

obviousness.

To the extent a finder of fact determines that a limitation of any of the ’995 Patent Asserted Claims is not disclosed by one of the references identified above pursuant to P.R. 3-3(a), the claim is nevertheless unpatentable as obvious because they contain nothing that constitutes a patentable innovation. To the extent a finder of fact determines that a limitation of the ’995 Patent Asserted Claims is not anticipated, it does not go beyond combining familiar elements according to known methods to achieve predictable results or does more than choose between clear alternatives known to those of ordinary skill in the art.

a. Obviousness Rationale and Motivations to Combine

Obviousness: For at least the reasons described in these contentions, it would have been obvious to one of ordinary skill in the art to combine any of a number of prior art references, including any combination of those prior art references identified in Appendix F, along with the knowledge of one of ordinary skill in the art, to meet the limitations of the ’995 Patent Asserted Claims. As a result, the references identified herein render one or more Asserted Claims of the ’995 Patent obvious when are read in combination with each other. As an additional example, the references identified herein render render one or more Asserted Claims of the ’995 Patent obvious when are read in combination with the state of the art and/or the knowledge of persons of ordinary skill in the art. As a further example, the references identified herein render render one or more Asserted Claims of the ’995 Patent obvious when are read in combination with each other and with the state of the art and/or the knowledge of persons of ordinary skill in the art. Each and every reference identified herein is also relevant to the state of the art at the time of the alleged invention. Any of the references disclosed above may be combined with one another to render obvious (and therefore invalid) each of ACT’s Asserted Claims. Defendants may rely upon a

subset of the identified references or all of the references identified herein, including all references in Appendix F, for purposes of obviousness depending on the Court's claim construction, positions taken by ACT during this litigation, and further investigation and discovery.

Reservation of Rights: Moreover, as mentioned above, Defendants have not yet completed their search or discovery concerning additional prior art. As such, Defendants' inclusion of exemplary combinations does not preclude them from identifying other invalidating combinations as appropriate, and Defendants reserve the right to identify additional specific combinations as well as to detail and explain such combinations.

No More Than Ordinary Variations of Prior Art; No Unexpected Results: To the extent not anticipated, the '995 Patent Asserted Claims represent no more than the result of ordinary variations of the prior art. Defendants further believe that no showing of a specific motivation to combine prior art is required to combine the references disclosed above and in the attached charts, as each combination of art would have no unexpected results, and at most would simply represent a known alternative to one of ordinary skill in the art. *See KSR Int'l Co. v. Teleflex, Inc.*, 550 U.S. 398, 415-16 (2007) (rejecting the Federal Circuit's "rigid" application of the teaching, suggestion, or motivation to combine test, instead espousing an "expansive and flexible" approach); *Apple Inc. v. Samsung Elecs. Co*., 839 F.3d 1034, 1058 (Fed. Cir. 2016); *Intercontinental Great Brands LLC v. Kellogg N. Am. Co*., 869 F.3d 1336, 1344 (Fed. Cir. 2017). Indeed, the Supreme Court held that a person of ordinary skill in the art is "a person of ordinary creativity, not an automaton" and "in many cases a person of ordinary skill in the art will be able to fit the teachings of multiple patents together like pieces of a puzzle." *Id.* at 420-21. Nevertheless, in addition to the information contained elsewhere in these contentions, Defendants identify motivation and reason to combine the cited art.

Predictable Results; Obvious to Try: One or more combinations of the prior art references identified in Appendix B would have been obvious because these references would have been combined using: known methods to yield predictable results; known techniques in the same way; a simple substitution of one known, equivalent element for another to obtain predictable results; and/or a teaching, suggestion, or motivation in the prior art generally. In addition, it would have been obvious to try combining the prior art references identified above because there were only a finite number of predictable solutions and/or because known work in one field of endeavor prompted variations based on predictable design incentives and/or market forces either in the same field or a different one. Further, the combinations of the prior art references identified in Appendix F would have been obvious because the combinations represent known potential options with a reasonable expectation of success.

Interrelated Teachings: Additional evidence that there would have been a motivation to combine the prior art references identified above includes the interrelated teachings of multiple prior art references; common authorship; the effects of demands known to the design community or present in the marketplace; the existence of a known problem for which there was an obvious solution encompassed by the '995 Patent Asserted Claims; the existence of a known need or problem in the field of the endeavor at the time of the alleged invention(s); and the background knowledge that would have been possessed by a person having ordinary skill in the art.

Summary of Motivations to Combine: Thus, the motivation to combine the teachings of the prior art references disclosed in Appendix F is found in the references themselves and also in: (1) the nature of the problem being solved; (2) the express, implied and inherent teachings of the prior art; (3) the knowledge of persons of ordinary skill in the art; (4) the predictable results obtained in combining the different elements of the prior art; (5) the predictable results obtained

in simple substitution of one known element for another; (6) the use of a known technique to improve similar devices, methods, or products in the same way; (7) the predictable results obtained in applying a known technique to a known device, method, or product ready for improvement; (8) the finite number of identified predictable solutions that had a reasonable expectation of success; and (9) known work in various technological fields that could be applied to the same or different technological fields based on design incentives or other market forces.

Same Area of Technology: Additionally, it would be obvious to one of ordinary skill in the art to consult and/or combine any of the prior art listed in Appendix F because all of these references relate to the same area of technology and/or are from analogous art. The ’995 Patent Asserted Claims are directed to decoding video via super-resolution enlargement whereby the images are enlarged and converted to a higher resolution. *See, e.g.*, ’995 Patent at Abstract. The ’995 Patent Asserted Claims merely unite old elements, well known in the field, with no change in their respective function or result. Given the interrelated teachings of the prior art, the effects of demands known to the design community or present in the marketplace, and the background knowledge possessed by a person having ordinary skill in the art, it would have been obvious for one of ordinary skill in the art to combine these familiar elements, disclosed and/or embodied in the prior art listed above to practice the ’995 Patent Asserted Claims.

Same Technical Issues: A person of ordinary skill would have been motivated to combine the above prior art based on his/her knowledge, the nature of the problem to be solved, and the teachings of the prior art. The identified prior art addresses the same or similar technical issues and suggests the same or similar solutions to those issues. Moreover, some of the prior art refer to or discuss other prior art, illustrating the close technical relationship among the prior art. For the ’995 Patent, one of ordinary skill in the art would have been motivated to combine known prior

art solutions described in these references relating to video encoding and/or decoding techniques and systems and known features related thereto.

Demand and Market Forces: For example, market forces suggested a demand for efficient techniques for encoding and decoding media, and thus one of skill in the art would have thought to combine or modify references that described known methods that one of skill in the art would have recognized as offering improvements to solutions of that time.

Known Elements; Obvious to Try: Moreover, many of the claim elements were already known as admitted by the applicants in the patent specification. These elements represented design choices available to a person of ordinary skill. When there is a design need or market pressure to solve a problem such as identified previously and/or described in the '995 Patent, and there are a finite number of identified, predictable solutions, a person of ordinary skill would be motivated to combine the known options that are within his or her technical grasp. For the '995 Patent, there are a finite number of approaches for decoding media and/or interpolating digital media. For example, as of the priority date of the '995 Patent, a POSITA would have been very familiar with basic elements of the '995 Patent's claims such as demultiplexing, enlarging, resolution converting, decoding, and interpolating digital media. Such elements were within the knowledge of a POSITA, whether or not disclosed in any particular reference, and the inclusion of such elements in the '995 Patent's claims does not render them novel or non-obvious.

As confirmed by the examiner during the prosecution of the '995 Patent, the Asserted Claims of the '995 Patent recite well-known components and techniques such as "the use of super-resolution processors in scalable video coding systems" (*see, e.g.,* 10/25/2016 Non-Final Rejection at 8, 14, 18, 20 (citing Ong)), "the use of resolution converters for multi-resolution encoding and decoding to enhance current and reference frames" (*see, e.g.,* 10/25/2016 Non-Final Rejection at

6, 9, 15 (citing Holcomb); 5/17/2017 Final Rejection at 4, 7, 10-11, 16 (same); 10/4/2017 Non-Final Rejection at 7, 11, 14, 20 (same); 5/23/2017 Final Rejection at 5, 9, 13, 18 (same)) and "to implement resampling of pixels" (*see, e.g.,* 5/23/2017 Final Rejection at 5, 9, 13, 18 (citing Holcomb), "enlarging a set of decoded pictures with a second resolution higher than the standard resolution" (*see, e.g.,* 5/17/2017 Final Rejection at 5, 8, 12, 16-17 (citing Suzuki); 10/4/2017 Non-Final Rejection at 8, 11, 15, 20 (same) and "enlarging a set of decoded pictures with a second resolution higher than the standard resolution and implementing an interpolation of pixels" (*see, e.g.,* 5/23/2017 Final Rejection at 6, 10, 14, 19 (citing Barkley)).

In addition to the specific examples provided above, Defendants reserve the right to rely on the disclosures of the references listed in Appendix F for additional motivation to combine. These examples of combinations are given merely to illustrate various motivations to combine and are not intended to provide an exhaustive list of every possible combination to which the motivation may apply. Defendants reserve the right to contend that the motivations to combine provided herein apply to other combinations at the appropriate time, e.g., in expert reports regarding invalidity. To the extent one or more of identified combinations is posed as a combination of only two references, it does not indicate that the two references that are being combined for one purpose could not be joined by a third reference (or more additional references) whose combination serves the same or a different purpose. Indeed, many of the features recited in the asserted claims are componentized features/functions whereby the feature could be implemented using teachings from another source while not interfering with additional features. For that reason, a POSITA may have reasonably looked to and been motivated to combine three or more references in order to achieve a specific outcome.

b. Combinations

As explained above, the Asserted Claims of the ’995 Patents comprise a combination of well-known elements and techniques, including a “demultiplexer” for demultiplexing two sequences based on a input sequence, a “first decoder” for decoding pictures from an encoded sequence of bits, a “super-resolution enlarger” for creating a sequence of pictures with increased resolution, “resolution converters” for descreasing or increasing the resolution of a sequence of pictures, and a “second decoder” for using “standard resolution” inputs to create a sequence of pictures with increased resolution. All of these elements and techniques were well-known to persons of ordinary skill in the art, and their combination at most reflects the application of ordinary skill, not nonobvious invention.

For example, demultiplexers are well known and conventional components that are routinely used in video decoding systems. *See, e.g.,* Sasai (F1), Wang (F2), Jeon (F2), Martins (F31), Kondo (F29), Hannuksela (F30), Lim-206, (F28); *see also, e.g.,* Sasai at Fig. 15, [0013], [0015]; Wang at Fig. 15, [0083]; Jeon at Fig. 5, [0070]; Fogg ’236 at Fig. 29, 30; Fogg ’300 at 23; Fogg ’926 at 24; Ong at Fig. 2, demuxer 202, pg. 15; Martins at Page 803-805, 806, 807, Fig. 2, 3; Kondo at Fig. 41, [0936]; Hanuksela at Fig. 3, [0048]-[0056]; Lim-206 at Fig. 22, [0288]-[0303]; Park at page 21; H.263-Jan2005 at Fig. 1, Summary, Section 3.2, Annex U; Kramer at Abstract, page 356; Keren at Abstract, page 742; Tsai at page 318; Patti at Abstract, page 1064; Gurturk at Abstract, page 170; Chen at Abstract, page 465; Erickson at Abstract. Similarly, it is axiomatic that video decoding systems would utilize a well-known and conventional component – a decoder – to decode pictures/frames from an encoded sequence of bits. *See, e.g.,* Sasai (F1), Wang (F2), Jeon (F2), Fogg (F10), Nagumo-519 (F11), Martins (F31); Suzuki (F22), Kondo (F29), Hannuksela (F30), Gu (F27), Garrido-868 (F24), Schreiber (F18), Lim-206 (F28), Schwarz (F17); *see also, e.g.,* Sasai at Fig. 1, [0093], [0129]; Wang at Fig. 15, [0083], [0087]; Jeon at Fig. 5,

[0070]; Fogg ’236 at Fig. 4, 29, 11:46-12:9, 39:52-58; Margulis ’994 at Fig. 4, 5, 11:40-12:15; Nagumo-519 at Figs. 3, 4, 7-14, 16-18, 21-22, 25, 30-32, 35-36, 39, ¶¶ [0052]-[0053], [0110]-[0111], [0120]-[0121], [0124]-[0125], [0035], [0143]-[0144], [0149]-[0150], [0153]-[0154]; Ong at Figs. 2, 4a-4b, pgs. 15-17); Martins at Page 803-805, 806, 807, Fig. 2, 3; Suzuki at Fig. 2-7, 13-16, [0064]-[0067]; Kondo at Fig. 41, [0955]; Hannuksela at [0048]-[0056], [0107]; Gu at Fig. 4, 5, [0002]-[0017], [0062]-[0070]; Garrido-868 at Fig. 4a, 4b, 4c, 4d, 4e, 5c, 5d, 5e, 6a, 6b 6c, 6d, 8:23-13-9, 53:1-54:7, 55:7-59:11; Schreiber at page 3-10; Lim-206 at Fig. 26, 28, [0144]-[0148], [0288]-[0303]; Schwarz at page 7-16; Wedi at Fig. 16, [0071], [0142]; Park at page 21; H.263-Jan2005 at Fig. 1, Summary, Section 3.2, Annex U; Kramer at Abstract, page 356; Keren at Abstract, page 742; Tsai at page 318; Patti at Abstract, page 1064; Gurturk at Abstract, page 170; Chen at Abstract, page 465; Erickson at Abstract. Moreover, as recognized by the examiner during the prosecution of the ’995 Patent, components and techniques for changing the resolution of content in order to enhance a video, such as through “the use of super-resolution processors in scalable video coding systems” (*see, e.g.,* 10/25/2016 Non-Final Rejection at 8, 14, 18, 20 (citing Ong)), “enlarging a set of decoded pictures with a second resolution higher than the standard resolution” (*see, e.g.,* 5/17/2017 Final Rejection at 5, 8, 12, 16-17 (citing Suzuki); 10/4/2017 Non-Final Rejection at 8, 11, 15, 20 (same)) and “enlarging a set of decoded pictures with a second resolution higher than the standard resolution and implementing an interpolation of pixels” (*see, e.g.,* 5/23/2017 Final Rejection at 6, 10, 14, 19 (citing Barkley)) and “the use of resolution converters for multi-resolution encoding and decoding to enhance current and reference frames and to implement resampling of pixels” (*see, e.g.,* 10/25/2016 Non-Final Rejection at 6, 9, 15 (citing Holcomb); 5/17/2017 Final Rejection at 4, 7, 10-11, 16 (same); 10/4/2017 Non-Final Rejection at 7, 11, 14, 20 (same); 5/23/2017 Final Rejection at 5, 9, 13, 18 (same)). *See also* Sasai

(F1), Wang (F2), Jeon (F2), Fogg (F10), Nagumo-519 (F11), Martins (F31), Suzuki (F22), Wedi (F21); *see also, e.g.,* Sasai at Fig. 1, 2, 11A, 11B, [0002], [0010], [0014], [0015], [0023], [0026], [0089], [0129], [0149]; Wang at Fig. 17; Fogg '236 at 10:44-56, 13:10-38, 16:57-17:8, 40:22-49, 40:50-41:4; Margulis '994 at Fig. 4, 5, 11:40-12:15, Fogg '300 at 10, 14, 22, 23; Fogg '926 at 11; Nagumo-519 at Figs. 1-4, 8-14, 16-18, 21-22, 25, 30-32, 35-36, 39, ¶¶ [0004]-[0034], [0052]-[0053], [0110]-[0111], [0120]-[0121], [0124]-[0125], [0035], [0143]-[0144], [0149]-[0150], [0153]-[0154]; Ong at Figs. 1a-6b, pgs. 16-18; Holcomb at Figs. 2-3, 1:13-16, 3:3-12, 3:56-64, 6:8-27, 7:23-48; Barkley at ¶¶ [0018]-[0019], [0053]-[0056]; Suzuki at Figs. 1, 8, 11, 18, 28-34, 39, Abstract, 19:40-55, 25:27-38, 27:43-49, 37:3-38:19, 38:53-39:29, 39:59-41:18, 42:20-43:48, 10:46-49; Martins at Page 803-805, 806, 807, Fig. 2, 3; Park at page 21; H.263-Jan2005 at Fig. 1, Summary, Section 3.2, Annex U; Kramer at Abstract, page 356; Keren at Abstract, page 742; Tsai at page 318; Patti at Abstract, page 1064; Gurturk at Abstract, page 170; Chen at Abstract, page 465; Erickson at Abstract; *see generally* Haskell, Katsaggelos, Richardson). Additionally, enhancing a sequence of pictures using a second decoder, such as by "add[ing] decoded difference data created at the standard resolution to predictive pictures with the standard resolution, to create a sequence of super-resolution pictures" ('995 Patent at 53:36-40), is well known in the prior art. *See, e.g.,* Sasai (F1), Wang (F2), Jeon (F2), Fogg (F10), Nagumo-519 (F11), Martins (F31); *see also, e.g.,* Nagumo-519 at Figs. 3, 4, 8-14, 16-18, 21-22, 25, 30-32, 35-36, 39, ¶¶ [0052]-[0053], [0110]-[0111], [0120]-[0121], [0124]-[0125], [0035], [0143]-[0144], [0149]-[0150], [0153]-[0154]; Wang at Fig. 15, [0083]; Jeon at Fig. 5, [0070]; Fogg '236 at Fig. 4, 29, 11:46-12:9, 39:52-58, Sasai at Fig. 1, [0093], [0117], [0129]; Holcomb at Figs. 2, 5, 6:8-27, 7:23-48, 9:14-54; Barkley at Figs. 1, 3, 5-8, ¶ [0005]); Martins at Page 803-805, 806, 807, Fig. 2, 3; Park at page 21; H.263-Jan2005 at Fig. 1, Summary, Section 3.2, Annex U; Kramer at Abstract, page 356; Keren at

Abstract, page 742; Tsai at page 318; Patti at Abstract, page 1064; Gurturk at Abstract, page 170; Chen at Abstract, page 465; Erickson at Abstract.

Additionally, it would have been obvious to combine teachings concerning upsampling and interpolation (as taught in Martins, as well as the other references discussed above) with the well-known practice of selecting between reference pictures (as taught in H.263 Annex U and H.264, as well as the other references discussed above). For example, it would have been an obviously suitable option to apply Martins' teachings in the context of systems practicing H.263 Annex U, H.264, and/or related codecs, such as the Roku HD1000 Product, Roku HD1000 System, Adobe Flash Player, Apple TV, Qualcomm MSM7200, Horizon Hz72220, iPhone, HTC Touch Cruise, HTC Touch Dual, and/or FFmpeg, among other systems identified herein or for which Defendants are actively seeking information and discovery from third parties.

A POSITA would have been motivated to combine these well-known components and techniques to decode a video as such a combination of components and techniques was among many known and suitable ways to enhance the quality of a sequence of pictures during a video decoding process. Such a combination of these elements would be a simple substitution of known elements in order to obtain the predictable result of enhanced picture quality for a video during a video decoding process. Moreover, the addition of the above recited components and techniques to similar video decoding systems would be known to improve the base video decoding system in the same manner described in the prior art. Additionally, the inclusion of the above-recited components and techniques would involve the application of known techniques for improving the video quality of video streams over, for example, resource or bandwidth-limited systems, without increasing the size of the transferred video stream. Furthermore, the combination of these components and techniques would be "obvious to try," because it would involve simple design

choices from a finite number of identified, predictable solutions, with a reasonable expectation of success.

c. Additional Combinations

For at least the reasons described above, it would have been obvious to one of ordinary skill in the art to combine each prior art reference listed in Appendix F with any other reference or references listed in Appendix F along with the knowledge of one of ordinary skill in the art to arrive at the inventions claims in the ’995 Patent.[28] For example, and without limitation, the Asserted Claims of the ’995 Patent would have been obvious to one of ordinary skill in the art in view of the following combinations:

Patent No. or Title (Primary Inventor/Author)	In Combination with One or More of: (Patent No. or Title (Primary Inventor/Author))
Wang	• Jeon • Yagasaki • Sasai • Nakamura • Fogg ’236 • Margulis ’994 • Fogg ’300 • Fogg ’926 • Nagumo-519 • Ong • Holcomb • Suzuki • Barkley • Schwarz • Schreiber • Tsai • Garrido • Wedi

[28] Further, Defendants are actively searching for information regarding at least the systems, devices, and/or inventions listed above in Table 2-F. It would have been obvious to one of ordinary skill in the art to combine each of the prior art references listed in Appendix F with any of the systems identified in Table 2-F. Defendants reserve the right to supplement or amend these contentions as discovery progresses, to the extent permitted by the Court.

Patent No. or Title (Primary Inventor/Author)	In Combination with One or More of: (Patent No. or Title (Primary Inventor/Author))
	• Lim-000 • Garrido-868 • Margulis • Slinger • Gu • Lim-206 • Kondo • Hannuksela • Martins • Adobe Flash Player • Apple TV • Qualcomm MSM7200 • Horizon Hz72220 • iPhone • HTC Touch Cruise • HTC Touch Dual • FFmpeg • Roku HD1000 Product • Roku HD1000 System • The knowledge of a person of ordinary skill in the art.
Jeon	• Wang • Yagasaki • Sasai • Nakamura • Fogg ’236 • Margulis ’994 • Fogg ’300 • Fogg ’926 • Nagumo-519 • Ong • Holcomb • Suzuki • Barkley • Schwarz • Schreiber • Tsai • Garrido • Wedi • Lim-000 • Garrido-868 • Margulis

Patent No. or Title (Primary Inventor/Author)	In Combination with One or More of: (Patent No. or Title (Primary Inventor/Author))
	• Slinger • Gu • Lim-206 • Kondo • Hannuksela • Martins • Adobe Flash Player • Apple TV • Qualcomm MSM7200 • Horizon Hz72220 • iPhone • HTC Touch Cruise • HTC Touch Dual • FFmpeg • Roku HD1000 Product • Roku HD1000 System • The knowledge of a person of ordinary skill in the art.
Yagasaki	• Wang • Jeon • Sasai • Nakamura • Fogg ’236 • Margulis ’994 • Fogg ’300 • Fogg ’926 • Nagumo-519 • Ong • Holcomb • Suzuki • Barkley • Schwarz • Schreiber • Tsai • Garrido • Wedi • Lim-000 • Garrido-868 • Margulis • Slinger • Gu • Lim-206

Patent No. or Title (Primary Inventor/Author)	In Combination with One or More of: (Patent No. or Title (Primary Inventor/Author))
	• Kondo • Hannuksela • Martins • Adobe Flash Player • Apple TV • Qualcomm MSM7200 • Horizon Hz72220 • iPhone • HTC Touch Cruise • HTC Touch Dual • FFmpeg • Roku HD1000 Product • Roku HD1000 System • The knowledge of a person of ordinary skill in the art.
Sasai	• Wang • Jeon • Yagasaki • Nakamura • Fogg ’236 • Margulis ’994 • Fogg ’300 • Fogg ’926 • Nagumo-519 • Ong • Holcomb • Suzuki • Barkley • Schwarz • Schreiber • Tsai • Garrido • Wedi • Lim-000 • Garrido-868 • Margulis • Slinger • Gu • Lim-206 • Kondo • Hannuksela • Martins

Patent No. or Title (Primary Inventor/Author)	In Combination with One or More of: (Patent No. or Title (Primary Inventor/Author))
	• Adobe Flash Player • Apple TV • Qualcomm MSM7200 • Horizon Hz72220 • iPhone • HTC Touch Cruise • HTC Touch Dual • FFmpeg • Roku HD1000 Product • Roku HD1000 System • The knowledge of a person of ordinary skill in the art.
Nakamura	• Wang • Jeon • Yagasaki • Sasai • Fogg ’236 • Margulis ’994 • Fogg ’300 • Fogg ’926 • Nagumo-519 • Ong • Holcomb • Suzuki • Barkley • Schwarz • Schreiber • Tsai • Garrido • Wedi • Lim-000 • Garrido-868 • Margulis • Slinger • Gu • Lim-206 • Kondo • Hannuksela • Martins • Adobe Flash Player • Apple TV • Qualcomm MSM7200

Patent No. or Title (Primary Inventor/Author)	In Combination with One or More of: (Patent No. or Title (Primary Inventor/Author))
	• Horizon Hz72220 • iPhone • HTC Touch Cruise • HTC Touch Dual • FFmpeg • Roku HD1000 Product • Roku HD1000 System • The knowledge of a person of ordinary skill in the art.
Fogg ’236	• Wang • Jeon • Yagasaki • Sasai • Margulis ’994 • Fogg ’300 • Fogg ’926 • Nakamura • Nagumo-519 • Ong • Holcomb • Suzuki • Barkley • Schwarz • Schreiber • Tsai • Garrido • Wedi • Lim-000 • Garrido-868 • Margulis • Slinger • Gu • Lim-206 • Kondo • Hannuksela • Martins • Adobe Flash Player • Apple TV • Qualcomm MSM7200 • Horizon Hz72220 • iPhone • HTC Touch Cruise

Patent No. or Title (Primary Inventor/Author)	In Combination with One or More of: (Patent No. or Title (Primary Inventor/Author))
	• HTC Touch Dual • FFmpeg • Roku HD1000 Product • Roku HD1000 System • The knowledge of a person of ordinary skill in the art.
Margulis ’994	• Wang • Jeon • Yagasaki • Sasai • Fogg ’236 • Fogg ’300 • Fogg ’926 • Nakamura • Schwarz • Schreiber • Tsai • Garrido • Wedi • Lim-000 • Garrido-868 • Margulis • Slinger • Gu • Lim-206 • Kondo • Hannuksela • Martins • Adobe Flash Player • Apple TV • Qualcomm MSM7200 • Horizon Hz72220 • iPhone • HTC Touch Cruise • HTC Touch Dual • FFmpeg • Roku HD1000 Product • Roku HD1000 System • The knowledge of a person of ordinary skill in the art.
Fogg ’300	• Wang • Jeon • Yagasaki

Patent No. or Title (Primary Inventor/Author)	In Combination with One or More of: (Patent No. or Title (Primary Inventor/Author))
	• Sasai • Fogg ’236 • Margulis ’994 • Fogg ’926 • Nakamura • Schwarz • Schreiber • Tsai • Garrido • Wedi • Lim-000 • Garrido-868 • Margulis • Slinger • Gu • Lim-206 • Kondo • Hannuksela • Martins • Adobe Flash Player • Apple TV • Qualcomm MSM7200 • Horizon Hz72220 • iPhone • HTC Touch Cruise • HTC Touch Dual • FFmpeg • Roku HD1000 Product • Roku HD1000 System • The knowledge of a person of ordinary skill in the art.
Fogg ’926	• Wang • Jeon • Yagasaki • Sasai • Fogg ’236 • Margulis ’994 • Fogg ’300 • Nakamura • Schwarz • Schreiber • Tsai

Patent No. or Title (Primary Inventor/Author)	In Combination with One or More of: (Patent No. or Title (Primary Inventor/Author))
	• Garrido • Wedi • Lim-000 • Garrido-868 • Margulis • Slinger • Gu • Lim-206 • Kondo • Hannuksela • Martins • Adobe Flash Player • Apple TV • Qualcomm MSM7200 • Horizon Hz72220 • iPhone • HTC Touch Cruise • HTC Touch Dual • FFmpeg • Roku HD1000 Product • Roku HD1000 System • The knowledge of a person of ordinary skill in the art.
Nagumo-519	• Wang • Jeon • Yagasaki • Sasai • Nakamura • Fog • Ong • Holcomb • Suzuki • Barkley • Schwarz • Schreiber • Tsai • Garrido • Wedi • Lim-000 • Garrido-868 • Margulis • Slinger

Patent No. or Title (Primary Inventor/Author)	In Combination with One or More of: (Patent No. or Title (Primary Inventor/Author))
	• Gu • Lim-206 • Kondo • Hannuksela • Martins • Adobe Flash Player • Apple TV • Qualcomm MSM7200 • Horizon Hz72220 • iPhone • HTC Touch Cruise • HTC Touch Dual • FFmpeg • Roku HD1000 Product • Roku HD1000 System • The knowledge of a person of ordinary skill in the art.
Adobe Flash Player	• Wang • Jeon • Yagasaki • Sasai • Nakamura • Fogg ’236 • Margulis ’994 • Fogg ’300 • Fogg ’926 • Nagumo-519 • Ong • Holcomb • Suzuki • Barkley • Schwarz • Schreiber • Tsai • Garrido • Wedi • Lim-000 • Garrido-868 • Margulis • Slinger • Gu • Lim-206

Patent No. or Title (Primary Inventor/Author)	In Combination with One or More of: (Patent No. or Title (Primary Inventor/Author))
	• Kondo • Hannuksela • Martins • Apple TV • Qualcomm MSM7200 • Horizon Hz72220 • iPhone • HTC Touch Cruise • HTC Touch Dual • FFmpeg • Roku HD1000 Product • Roku HD1000 System • The knowledge of a person of ordinary skill in the art.
Apple TV	• Wang • Jeon • Yagasaki • Sasai • Nakamura • Fogg ’236 • Margulis ’994 • Fogg ’300 • Fogg ’926 • Nagumo-519 • Ong • Holcomb • Suzuki • Barkley • Schwarz • Schreiber • Tsai • Garrido • Wedi • Lim-000 • Garrido-868 • Margulis • Slinger • Gu • Lim-206 • Kondo • Hannuksela • Martins

Patent No. or Title (Primary Inventor/Author)	In Combination with One or More of: (Patent No. or Title (Primary Inventor/Author))
	• Adobe Flash Player • Qualcomm MSM7200 • Horizon Hz72220 • iPhone • HTC Touch Cruise • HTC Touch Dual • FFmpeg • Roku HD1000 Product • Roku HD1000 System • The knowledge of a person of ordinary skill in the art.
Qualcomm MSM7200	• Wang • Jeon • Yagasaki • Sasai • Nakamura • Fogg ’236 • Margulis ’994 • Fogg ’300 • Fogg ’926 • Nagumo-519 • Ong • Holcomb • Suzuki • Barkley • Schwarz • Schreiber • Tsai • Garrido • Wedi • Lim-000 • Garrido-868 • Margulis • Slinger • Gu • Lim-206 • Kondo • Hannuksela • Martins • Adobe Flash Player • Apple TV • Horizon Hz72220

Patent No. or Title (Primary Inventor/Author)	In Combination with One or More of: (Patent No. or Title (Primary Inventor/Author))
	• iPhone • HTC Touch Cruise • HTC Touch Dual • FFmpeg • Roku HD1000 Product • Roku HD1000 System • The knowledge of a person of ordinary skill in the art.
Horizon Hz72220	• Wang • Jeon • Yagasaki • Sasai • Nakamura • Fogg ’236 • Margulis ’994 • Fogg ’300 • Fogg ’926 • Nagumo-519 • Ong • Holcomb • Suzuki • Barkley • Schwarz • Schreiber • Tsai • Garrido • Wedi • Lim-000 • Garrido-868 • Margulis • Slinger • Gu • Lim-206 • Kondo • Hannuksela • Martins • Adobe Flash Player • Apple TV • Qualcomm MSM7200 • iPhone • HTC Touch Cruise • HTC Touch Dual

Patent No. or Title (Primary Inventor/Author)	In Combination with One or More of: (Patent No. or Title (Primary Inventor/Author))
	• FFmpeg • Roku HD1000 Product • Roku HD1000 System • The knowledge of a person of ordinary skill in the art.
iPhone	• Wang • Jeon • Yagasaki • Sasai • Nakamura • Fogg ’236 • Margulis ’994 • Fogg ’300 • Fogg ’926 • Nagumo-519 • Ong • Holcomb • Suzuki • Barkley • Schwarz • Schreiber • Tsai • Garrido • Wedi • Lim-000 • Garrido-868 • Margulis • Slinger • Gu • Lim-206 • Kondo • Hannuksela • Martins • Adobe Flash Player • Apple TV • Qualcomm MSM7200 • Horizon Hz72220 • HTC Touch Cruise • HTC Touch Dual • FFmpeg • Roku HD1000 Product • Roku HD1000 System

Patent No. or Title (Primary Inventor/Author)	In Combination with One or More of: (Patent No. or Title (Primary Inventor/Author))
	• The knowledge of a person of ordinary skill in the art.
HTC Touch Cruise	• Wang • Jeon • Yagasaki • Sasai • Nakamura • Fogg ’236 • Margulis ’994 • Fogg ’300 • Fogg ’926 • Nagumo-519 • Ong • Holcomb • Suzuki • Barkley • Schwarz • Schreiber • Tsai • Garrido • Wedi • Lim-000 • Garrido-868 • Margulis • Slinger • Gu • Lim-206 • Kondo • Hannuksela • Martins • Adobe Flash Player • Apple TV • Qualcomm MSM7200 • Horizon Hz72220 • iPhone • HTC Touch Dual • FFmpeg • Roku HD1000 Product • Roku HD1000 System • The knowledge of a person of ordinary skill in the art.
HTC Touch Dual	• Wang • Jeon

Patent No. or Title (Primary Inventor/Author)	In Combination with One or More of: (Patent No. or Title (Primary Inventor/Author))
	• Yagasaki • Sasai • Nakamura • Fogg ’236 • Margulis ’994 • Fogg ’300 • Fogg ’926 • Nagumo-519 • Ong • Holcomb • Suzuki • Barkley • Schwarz • Schreiber • Tsai • Garrido • Wedi • Lim-000 • Garrido-868 • Margulis • Slinger • Gu • Lim-206 • Kondo • Hannuksela • Martins • Adobe Flash Player • Apple TV • Qualcomm MSM7200 • Horizon Hz72220 • iPhone • HTC Touch Cruise • FFmpeg • Roku HD1000 Product • Roku HD1000 System • The knowledge of a person of ordinary skill in the art.
FFmpeg	• Wang • Jeon • Yagasaki • Sasai • Nakamura

Patent No. or Title (Primary Inventor/Author)	In Combination with One or More of: (Patent No. or Title (Primary Inventor/Author))
	• Fogg ’236 • Margulis ’994 • Fogg ’300 • Fogg ’926 • Nagumo-519 • Ong • Holcomb • Suzuki • Barkley • Schwarz • Schreiber • Tsai • Garrido • Wedi • Lim-000 • Garrido-868 • Margulis • Slinger • Gu • Lim-206 • Kondo • Hannuksela • Martins • Adobe Flash Player • Apple TV • Qualcomm MSM7200 • Horizon Hz72220 • iPhone • HTC Touch Cruise • HTC Touch Dual • Roku HD1000 Product • Roku HD1000 System • The knowledge of a person of ordinary skill in the art.
Schwarz	• Jeon • Yagasaki • Sasai • Nakamura • Fogg ’236 • Margulis ’994 • Fogg ’300 • Fogg ’926

Patent No. or Title (Primary Inventor/Author)	In Combination with One or More of: (Patent No. or Title (Primary Inventor/Author))
	• Nagumo-519 • Ong • Holcomb • Suzuki • Barkley • Schreiber • Tsai • Garrido • Wedi • Lim-000 • Garrido-868 • Margulis • Slinger • Gu • Lim-206 • Kondo • Hannuksela • Martins • Adobe Flash Player • Apple TV • Qualcomm MSM7200 • Horizon Hz72220 • iPhone • HTC Touch Cruise • HTC Touch Dual • FFmpeg • Roku HD1000 Product • Roku HD1000 System • The knowledge of a person of ordinary skill in the art.
Shreiber	• Jeon • Yagasaki • Sasai • Nakamura • Fogg ’236 • Margulis ’994 • Fogg ’300 • Fogg ’926 • Nagumo-519 • Ong • Holcomb • Suzuki

Patent No. or Title (Primary Inventor/Author)	In Combination with One or More of: (Patent No. or Title (Primary Inventor/Author))
	• Barkley • Schwarz • Tsai • Garrido • Wedi • Lim-000 • Garrido-868 • Margulis • Slinger • Gu • Lim-206 • Kondo • Hannuksela • Martins • Adobe Flash Player • Apple TV • Qualcomm MSM7200 • Horizon Hz72220 • iPhone • HTC Touch Cruise • HTC Touch Dual • FFmpeg • Roku HD1000 Product • Roku HD1000 System • The knowledge of a person of ordinary skill in the art.
Tsai	• Jeon • Yagasaki • Sasai • Nakamura • Fogg ’236 • Margulis ’994 • Fogg ’300 • Fogg ’926 • Nagumo-519 • Ong • Holcomb • Suzuki • Barkley • Schwarz • Schreiber • Garrido

Patent No. or Title (Primary Inventor/Author)	In Combination with One or More of: (Patent No. or Title (Primary Inventor/Author))
	• Wedi • Lim-000 • Garrido-868 • Margulis • Slinger • Gu • Lim-206 • Kondo • Hannuksela • Martins • Adobe Flash Player • Apple TV • Qualcomm MSM7200 • Horizon Hz72220 • iPhone • HTC Touch Cruise • HTC Touch Dual • FFmpeg • Roku HD1000 Product • Roku HD1000 System • The knowledge of a person of ordinary skill in the art.
Garrido	• Jeon • Yagasaki • Sasai • Nakamura • Fogg ’236 • Margulis ’994 • Fogg ’300 • Fogg ’926 • Nagumo-519 • Ong • Holcomb • Suzuki • Barkley • Schwarz • Schreiber • Tsai • Wedi • Lim-000 • Garrido-868 • Margulis

Patent No. or Title (Primary Inventor/Author)	In Combination with One or More of: (Patent No. or Title (Primary Inventor/Author))
	• Slinger • Gu • Lim-206 • Kondo • Hannuksela • Martins • Adobe Flash Player • Apple TV • Qualcomm MSM7200 • Horizon Hz72220 • iPhone • HTC Touch Cruise • HTC Touch Dual • FFmpeg • Roku HD1000 Product • Roku HD1000 System • The knowledge of a person of ordinary skill in the art.
Wedi	• Jeon • Yagasaki • Sasai • Nakamura • Fogg ’236 • Margulis ’994 • Fogg ’300 • Fogg ’926 • Nagumo-519 • Ong • Holcomb • Suzuki • Barkley • Schwarz • Schreiber • Tsai • Garrido • Lim-000 • Garrido-868 • Margulis • Slinger • Gu • Lim-206 • Kondo

Patent No. or Title (Primary Inventor/Author)	In Combination with One or More of: (Patent No. or Title (Primary Inventor/Author))
	• Hannuksela • Martins • Adobe Flash Player • Apple TV • Qualcomm MSM7200 • Horizon Hz72220 • iPhone • HTC Touch Cruise • HTC Touch Dual • FFmpeg • Roku HD1000 Product • Roku HD1000 System • The knowledge of a person of ordinary skill in the art.
Lim-000	• Jeon • Yagasaki • Sasai • Nakamura • Fogg ’236 • Margulis ’994 • Fogg ’300 • Fogg ’926 • Nagumo-519 • Ong • Holcomb • Suzuki • Barkley • Schwarz • Schreiber • Tsai • Garrido • Wedi • Garrido-868 • Margulis • Slinger • Gu • Lim-206 • Kondo • Hannuksela • Martins • Adobe Flash Player • Apple TV

Patent No. or Title (Primary Inventor/Author)	In Combination with One or More of: (Patent No. or Title (Primary Inventor/Author))
	• Qualcomm MSM7200 • Horizon Hz72220 • iPhone • HTC Touch Cruise • HTC Touch Dual • FFmpeg • Roku HD1000 Product • Roku HD1000 System • The knowledge of a person of ordinary skill in the art.
Garrido-868	• Jeon • Yagasaki • Sasai • Nakamura • Fogg ’236 • Margulis ’994 • Fogg ’300 • Fogg ’926 • Nagumo-519 • Ong • Holcomb • Suzuki • Barkley • Schwarz • Schreiber • Tsai • Garrido • Wedi • Lim-000 • Margulis • Slinger • Gu • Lim-206 • Kondo • Hannuksela • Martins • Adobe Flash Player • Apple TV • Qualcomm MSM7200 • Horizon Hz72220 • iPhone • HTC Touch Cruise

Patent No. or Title (Primary Inventor/Author)	In Combination with One or More of: (Patent No. or Title (Primary Inventor/Author))
	• HTC Touch Dual • FFmpeg • Roku HD1000 Product • Roku HD1000 System • The knowledge of a person of ordinary skill in the art.
Margulis	• Jeon • Yagasaki • Sasai • Nakamura • Fogg ’236 • Margulis ’994 • Fogg ’300 • Fogg ’926 • Nagumo-519 • Ong • Holcomb • Suzuki • Barkley • Schwarz • Schreiber • Tsai • Garrido • Wedi • Lim-000 • Garrido-868 • Slinger • Gu • Lim-206 • Kondo • Hannuksela • Martins • Adobe Flash Player • Apple TV • Qualcomm MSM7200 • Horizon Hz72220 • iPhone • HTC Touch Cruise • HTC Touch Dual • FFmpeg • Roku HD1000 Product • Roku HD1000 System

Patent No. or Title (Primary Inventor/Author)	In Combination with One or More of: (Patent No. or Title (Primary Inventor/Author))
	• The knowledge of a person of ordinary skill in the art.
Slinger	• Jeon • Yagasaki • Sasai • Nakamura • Fogg ’236 • Margulis ’994 • Fogg ’300 • Fogg ’926 • Nagumo-519 • Ong • Holcomb • Suzuki • Barkley • Schwarz • Schreiber • Tsai • Garrido • Wedi • Lim-000 • Garrido-868 • Margulis • Gu • Lim-206 • Kondo • Hannuksela • Martins • Adobe Flash Player • Apple TV • Qualcomm MSM7200 • Horizon Hz72220 • iPhone • HTC Touch Cruise • HTC Touch Dual • FFmpeg • Roku HD1000 Product • Roku HD1000 System • The knowledge of a person of ordinary skill in the art.
Gu	• Jeon • Yagasaki • Sasai

Patent No. or Title (Primary Inventor/Author)	In Combination with One or More of: (Patent No. or Title (Primary Inventor/Author))
	• Nakamura • Fogg ’236 • Margulis ’994 • Fogg ’300 • Fogg ’926 • Nagumo-519 • Ong • Holcomb • Suzuki • Barkley • Schwarz • Schreiber • Tsai • Garrido • Wedi • Lim-000 • Garrido-868 • Margulis • Slinger • Lim-206 • Kondo • Hannuksela • Martins • Adobe Flash Player • Apple TV • Qualcomm MSM7200 • Horizon Hz72220 • iPhone • HTC Touch Cruise • HTC Touch Dual • FFmpeg • Roku HD1000 Product • Roku HD1000 System • The knowledge of a person of ordinary skill in the art.
Lim-206	• Jeon • Yagasaki • Sasai • Nakamura • Fogg ’236 • Margulis ’994 • Fogg ’300

Patent No. or Title (Primary Inventor/Author)	In Combination with One or More of: (Patent No. or Title (Primary Inventor/Author))
	• Fogg ’926 • Nagumo-519 • Ong • Holcomb • Suzuki • Barkley • Schwarz • Schreiber • Tsai • Garrido • Wedi • Lim-000 • Garrido-868 • Margulis • Slinger • Gu • Kondo • Hannuksela • Martins • Adobe Flash Player • Apple TV • Qualcomm MSM7200 • Horizon Hz72220 • iPhone • HTC Touch Cruise • HTC Touch Dual • FFmpeg • Roku HD1000 Product • Roku HD1000 System • The knowledge of a person of ordinary skill in the art.
Kondo	• Jeon • Yagasaki • Sasai • Nakamura • Fogg ’236 • Margulis ’994 • Fogg ’300 • Fogg ’926 • Nagumo-519 • Ong • Holcomb

Patent No. or Title (Primary Inventor/Author)	In Combination with One or More of: (Patent No. or Title (Primary Inventor/Author))
	• Suzuki • Barkley • Schwarz • Schreiber • Tsai • Garrido • Wedi • Lim-000 • Garrido-868 • Margulis • Slinger • Gu • Lim-206 • Hannuksela • Martins • Adobe Flash Player • Apple TV • Qualcomm MSM7200 • Horizon Hz72220 • iPhone • HTC Touch Cruise • HTC Touch Dual • FFmpeg • Roku HD1000 Product • Roku HD1000 System • The knowledge of a person of ordinary skill in the art.
Hannuksela	• Jeon • Yagasaki • Sasai • Nakamura • Fogg ’236 • Margulis ’994 • Fogg ’300 • Fogg ’926 • Nagumo-519 • Ong • Holcomb • Suzuki • Barkley • Schwarz • Schreiber

Patent No. or Title (Primary Inventor/Author)	In Combination with One or More of: (Patent No. or Title (Primary Inventor/Author))
	• Tsai • Garrido • Wedi • Lim-000 • Garrido-868 • Margulis • Slinger • Gu • Lim-206 • Kondo • Martins • Adobe Flash Player • Apple TV • Qualcomm MSM7200 • Horizon Hz72220 • iPhone • HTC Touch Cruise • HTC Touch Dual • FFmpeg • Roku HD1000 Product • Roku HD1000 System • The knowledge of a person of ordinary skill in the art.
Martins	• Jeon • Yagasaki • Sasai • Nakamura • Fogg ’236 • Margulis ’994 • Fogg ’300 • Fogg ’926 • Nagumo-519 • Ong • Holcomb • Suzuki • Barkley • Schwarz • Schreiber • Tsai • Garrido • Wedi • Lim-000

Patent No. or Title (Primary Inventor/Author)	In Combination with One or More of: (Patent No. or Title (Primary Inventor/Author))
	• Garrido-868 • Margulis • Slinger • Gu • Lim-206 • Kondo • Hannuksela • Adobe Flash Player • Apple TV • Qualcomm MSM7200 • Horizon Hz72220 • iPhone • HTC Touch Cruise • HTC Touch Dual • FFmpeg • Roku HD1000 Product • Roku HD1000 System • The knowledge of a person of ordinary skill in the art.
Roku HD1000 Product	• Jeon • Yagasaki • Sasai • Nakamura • Fogg ’236 • Margulis ’994 • Fogg ’300 • Fogg ’926 • Nagumo-519 • Ong • Holcomb • Suzuki • Barkley • Schwarz • Schreiber • Tsai • Garrido • Wedi • Lim-000 • Garrido-868 • Margulis • Slinger • Gu

Patent No. or Title (Primary Inventor/Author)	In Combination with One or More of: (Patent No. or Title (Primary Inventor/Author))
	• Lim-206 • Kondo • Hannuksela • Martins • Adobe Flash Player • Apple TV • Qualcomm MSM7200 • Horizon Hz72220 • iPhone • HTC Touch Cruise • HTC Touch Dual • FFmpeg • Roku HD1000 System • The knowledge of a person of ordinary skill in the art.
Roku HD1000 System	• Jeon • Yagasaki • Sasai • Nakamura • Fogg ’236 • Margulis ’994 • Fogg ’300 • Fogg ’926 • Nagumo-519 • Ong • Holcomb • Suzuki • Barkley • Schwarz • Schreiber • Tsai • Garrido • Wedi • Lim-000 • Garrido-868 • Margulis • Slinger • Gu • Lim-206 • Kondo • Hannuksela • Martins

Patent No. or Title (Primary Inventor/Author)	In Combination with One or More of: (Patent No. or Title (Primary Inventor/Author))
	• Adobe Flash Player • Apple TV • Qualcomm MSM7200 • Horizon Hz72220 • iPhone • HTC Touch Cruise • HTC Touch Dual • FFmpeg • Roku HD1000 Product • The knowledge of a person of ordinary skill in the art.
Phek[29]	• Segall • Martins • He • The knowledge of a person of ordinary skill in the art
IPR2024-00374 Petition	• Ground 1: Phek in view of Segall, Martins, and He

As mentioned above, Defendants have not yet completed their search or discovery concerning additional prior art. Moreover, the exemplary combinations are provided based on Defendants' current understanding of the Asserted Claims and Plaintiff's apparent view of the scope of those claims as shown, for example, in Plaintiff's Infringement Contentions. Further, a *Markman* Order has not yet been issued in this case. As such, Defendants' inclusion of exemplary combinations does not preclude them from identifying other invalidating combinations as appropriate, and Defendants reserve the right to identify additional specific combinations as well as to detail and explain such combinations.

V. P.R. 3-3(c) – Claim Charts

Pursuant to Rule 3-3(c), Defendants identify invalidity claim charts identifying disclosures

[29] Defendants are providing notice of their intent to rely on each invalidity ground presented in IPR2024-00374, including Ground 1 that Phek in view of Segall, Martins, and He renders Claims 2-4, 11 obvious.

in the references identified in Sections III-IV supra as to the Asserted Claims of the Asserted Patents are provided in attached Appendix A ('128 Patent), Appendix B ('025 Patent), Appendix C ('150 Patent), Appendix D ('041 Patent), Appendix E ('303 Patent), and Appendix F ('995 Patent).

Defendants have identified relevant portions and/or features of the prior art. However, the identified prior art may contain additional descriptions of or alternative support for the claim limitations. Defendants may rely on uncited portions or features of the identified prior art, other documents, and expert testimony, to provide context or to aid in understanding the identified prior art and the state of the art. Citations to a particular figure in a reference include the caption and description of the figure and any text relating to the figure. Similarly, citations to particular text referring to a figure include the figure and caption as well. Portions relevant to dependent claims incorporate by reference the citations to the chain of claims from which that dependent claim derives. Likewise, portions related to subsequent limitations that refer to claim elements identified, described, and/or cited to in earlier limitations may rely on the citations related to those portions of the claim chart that identify and/or describe these elements.

Throughout the invalidity claim charts in Appendices A-F, Defendants provide exemplary citations showing where references disclose subject matter recited in preambles of the Asserted Claims, regardless of whether the preambles limit the claims. Defendants reserve the right to argue that the preambles are or are not limitations. Further, where an entry in a claim chart corresponding to a given limitation refers back to the discussion of another claim, the entry incorporates all evidence cited for the other claim.

As noted above, the asserted claims have not yet been construed. Additional portions of the references may become relevant after claim construction. Further, to the extent that any claim

term is governed by 35 U.S.C. § 112 ¶ 6, the claim charts identify, by the citations provided, the structure(s), act(s), or material(s) in each reference performing the claimed function for each limitation of the asserted claims. Plaintiffs' claim construction positions, expert analysis and testimony, and additional discovery could all inform which portions of the references disclose a limitation, including under 35 U.S.C. § 112 ¶ 6, and whether any particular limitation is governed by 35 U.S.C. § 112 ¶ 6. Defendants' contentions are based on the information presently available, and Defendants reserve all rights to provide their claim construction positions in accordance with the Docket Control Order in this case.

VI. P. R. 3-3(d) – Other Grounds for Invalidity

A. U.S. Patent No. 6,845,128

Pursuant to Rule 3-3(d), Defendants hereby identify grounds of invalidity for the '128 Patent based on lack of written description under 35 U.S.C. § 112, first paragraph; lack of enablement under 35 U.S.C. § 112, first paragraph; indefiniteness under 35 U.S.C. § 112, second paragraph; and indefiniteness under 35 U.S.C. § 112, sixth paragraph. These contentions shall not be construed as an admission that any claim construction advanced by Defendants in this case is in any way inconsistent, flawed, or erroneous. Nor should these contentions prevent Defendants from advancing claim construction and/or non-infringement positions in lieu of, or in addition to, invalidity positions. Further, these contentions shall not be construed as an admission of or acquiescence to Plaintiff's purported construction of the claim language or of other positions advanced by Plaintiff during the course of this litigation. Defendants' invalidity contentions under 35 U.S.C. § 112 may depend, in part, on the Court's claim construction, as well as Plaintiff's alleged scope of the '128 Patent Asserted Claims. Consequently, Defendants only identify the issues under 35 U.S.C. § 112 of which they are presently aware.

1. Lack of Written Description and/or Enablement Under 35 U.S.C. § 112, ¶ 1

The ’128 Patent does not provide sufficient written description to establish that the inventors were in possession of the alleged inventions recited in the ’128 Patent Asserted Claims at the time the ’128 Patent was filed, at least as plaintiff appears to be asserting those limitations. *Ariad Pharms., Inc. v. Eli Lilly & Co.*, 598 F.3d 1336, 1351 (Fed. Cir. 2010). In other words, the applicants did not describe their purported inventions in a manner that “reasonably conveys to those skilled in the art that the inventor had possession of the claimed subject matter as of the filing date.” *Id.* One of ordinary skill in the art would not have understood that the inventors were in possession of the full scope of the claimed apparatus and methods, at least as plaintiff appears to be asserting the claims. For example, the claims of the ’128 Patent do not provide sufficient written description of the limitations listed below. One of ordinary skill in the art would not understand the specification to provide a written description of setting and applying an emphasis level except for increasing the signal amplitude of an input video signal, and/or setting and applying an emphasis level to a video signal other than a signal prior to encoding, including prior to transformation, quantization, and variable length encoding. As another example, one of ordinary skill in the art would not understand the specification to provide a written description of the claimed multiplexor or multiplexing as encompassing including the quantization parameter syntax elements into a bit stream as part of video coding.

The specification of the ’128 Patent also does not enable one of ordinary skill in the art to make and/or use certain recited elements of the ’128 Patent Asserted Claims without undue experimentation, at least as plaintiff appears to be asserting those limitations. For example, the claims of the ’128 Patent fail to sufficiently enable the limtiations listed below. One of ordinary skill in the art would not understand the specification to enable setting and applying an emphasis

level except for increasing the signal amplitude of an input video signal, and/or setting and applying an emphasis level to a video signal other than a signal prior to encoding, including prior to transformation, quantization, and variable length coding. To the extent the following limitations are definite (under 35 U.S.C. § 112, ¶ 2), the application that became the '128 Patent fails to sufficiently describe or enable them as required by 35 U.S.C. § 112, ¶ 1:[30]

Term	Relevant Claim(s)
"an emphasis-level setter for setting an emphasis level to the input video signal in accordance with at least one factor among control data carried by the input video signal, a picture state detected from the input video signal and encoding conditions for the input video signal"	1-3
"an emphasizer for applying the emphasis processing to the input video signal at the emphasis level to obtain an emphasized video signal"	1
"The video-emphasis encoding apparatus according to claim 1 further comprising a detector for detecting a degree of quantization applied to the input video signal, wherein the emphasis-level setter sets the emphasis level in accordance with the detected degree of quantization as the encoding conditions."	2
"The video-emphasis encoding apparatus according to claim 1 further comprising a detector for detecting a degree of enhancement effects already applied to the input video signal, wherein the emphasis-level setter sets the emphasis level in accordance with the detected degree of enhancement effects as the picture state detected from the input video signal."	3
"emphasis level"	1-4
"input video signal"	1-4
"control data carried by the input video signal"	1, 4
"degree of quantization"	2
"degree of enhancement"	3
"emphasized video signal"	1-4
"emphasizer"	1-3
"multiplexer"	1-3

2. Invalidity Under 35 U.S.C. § 112, ¶ 2

"[T]he second paragraph of § 112 contains two requirements: first, the claim must set forth

[30] Listed claims also include all Asserted Claims dependent thereon, even if those claims are not individually listed.

what the applicant regards as his invention, and second, it must do so with sufficient particularity and distinctness, *i.e.*, the claim must be sufficiently definite." *Allen Eng'g Corp. v. Bartell Indus., Inc.*, 299 F.3d 1336, 1348 (Fed. Cir. 2002) (internal quotation marks and alteration omitted). "Where it would be apparent to one of skill in the art, based on the specification, that the invention set forth in a claim is not what the patentee regarded as his invention," the claim is "invalid under § 112, paragraph 2." *Id.* at 1349. Several of the '128 Patent Asserted Claims are invalid because it would be apparent to one of skill in the art, based on the specification, that the invention set forth in these claims are not what the patentee regarded as his invention, at least as the claims are being asserted by the Plaintiff. *Id.* These claims are invalid under the "applicant regards" prong of § 112 at least because they contain elements that differ from and/or conflict with the '128 Patent's written description of the invention, at least as the claim elements are being asserted by Plaintiff, or because they omit elements that one of skill in the art would understand as part of the '128 Patent's invention based on the specification: claims 1 and 4.

Independently, under § 112, ¶ 2, "a patent is invalid for indefiniteness if its claims, read in light of the specification delineating the patent, and the prosecution history, fail to inform, with reasonable certainty, those skilled in the art about the scope of the invention." *Nautilus, Inc. v. Biosig Instruments, Inc.*, 572 U.S. 898, 901 (2014). Several of the '128 Patent Asserted Claims are also invalid as indefinite under § 112, ¶ 2 because they fail to inform those skilled in the art about the scope of the invention with reasonable certainty and are indefinite.

The following limitations recited in the '128 Patent Asserted Claims are indefinite in whole, in part or in combination:[31]

[31] Listed claims also include all Asserted Claims dependent thereon, even if those claims are not individually listed.

Term	Relevant Claim(s)
"an emphasis-level setter for setting an emphasis level to the input video signal in accordance with at least one factor among control data carried by the input video signal, a picture state detected from the input video signal and encoding conditions for the input video signal"	1-3
"an emphasizer for applying the emphasis processing to the input video signal at the emphasis level to obtain an emphasized video signal"	1
"The video-emphasis encoding apparatus according to claim 1 further comprising a detector for detecting a degree of quantization applied to the input video signal, wherein the emphasis-level setter sets the emphasis level in accordance with the detected degree of quantization as the encoding conditions."	2
"The video-emphasis encoding apparatus according to claim 1 further comprising a detector for detecting a degree of enhancement effects already applied to the input video signal, wherein the emphasis-level setter sets the emphasis level in accordance with the detected degree of enhancement effects as the picture state detected from the input video signal."	3
"[an/a] emphasized video signal/the emphasized video signal"	1,4
"emphasis level"	1-4
"control data carried by the input video signal"	1, 4
"degree of quantization"	2
"degree of enhancement"	3

B. U.S. Patent No. 8,090,025

Pursuant to Rule 3-3(d), Defendants hereby identify grounds of invalidity for the '025 Patent based on lack of written description under 35 U.S.C. § 112, first paragraph; lack of enablement under 35 U.S.C. § 112, first paragraph; indefiniteness under 35 U.S.C. § 112, second paragraph; and indefiniteness under 35 U.S.C. § 112, sixth paragraph. These contentions shall not be construed as an admission that any claim construction advanced by Defendants in this case is in any way inconsistent, flawed, or erroneous. Nor should these contentions prevent Defendants from advancing claim construction and/or non-infringement positions in lieu of, or in addition to, invalidity positions. Further, these contentions shall not be construed as an admission of or acquiescence to Plaintiff's purported construction of the claim language or of other positions

advanced by Plaintiff during the course of this litigation. Defendants' invalidity contentions under 35 U.S.C. § 112 may depend, in part, on the Court's claim construction, as well as Plaintiff's alleged scope of the '025 Patent Asserted Claims. Consequently, Defendants only identify the issues under 35 U.S.C. § 112 of which they are presently aware.

1. Lack of Written Description and/or Enablement Under 35 U.S.C. § 112, ¶ 1

The '025 Patent does not provide sufficient written description to establish that the inventors were in possession of the alleged inventions recited in the '025 Patent Asserted Claims at the time the '025 Patent was filed, at least as plaintiff appears to be asserting those limitations. *Ariad Pharms., Inc. v. Eli Lilly & Co.*, 598 F.3d 1336, 1351 (Fed. Cir. 2010). In other words, the applicants did not describe their purported inventions in a manner that "reasonably conveys to those skilled in the art that the inventor had possession of the claimed subject matter as of the filing date." *Id.* One of ordinary skill in the art would not have understood that the inventors were in possession of the full scope of the claimed apparatus and methods, at least as plaintiff appears to be asserting the claims.

For example, the '025 patent does not provide sufficient written description of the limitations listed below. As a further example, one of ordinary skill in the art would not understand the specification to provide a written description of obtaining a boundary condition of each of a plurality of borders between the rectangular zones and another plurality of rectangular zones adjacent to the rectangular zones, finding a border, of the reference picture, having a boundary condition that matches the boundary condition, by motion-vector search in the reference picture, and generating the border motion-vector data that is data on a motion vector from a border of the rectangular zone in the picture to be coded to the border of the reference picture thus found, defining a boundary condition of a border that corresponds to the border motion vector data, from

the reference picture based on the border motion-vector data, and generating an estimated video signal in each rectangular zone in the picture to be coded, that satisfies Poisson's Equation, thus producing the predictive picture. As yet another example, one of ordinary skill in the art would not understand the specification to provide a written description of a zone-border motion compensator to define a boundary condition of a border that corresponds to the border motion vector data, from the reference picture based on the border motion-vector data, and generate an estimated video signal in each rectangular zone in the picture to be coded, that satisfies Poisson's Equation, thus producing a first predictive picture, at least under ACT's implicit interpretation of the limitation as covering conventional OBMC.

The specification of the '025 Patent also does not enable one of ordinary skill in the art to make and/or use certain recited elements of the '025 Patent Asserted Claims without undue experimentation, at least as plaintiff appears to be asserting those limitations. For example, the '025 patent fails to sufficiently enable the limtiations listed below. By way of further example, one of ordinary skill in the art would not understand the specification to enable every possible method of generating an estimated video signal in each rectangular zone in the picture to be coded that satisfies Poisson's Equation, yet the claims purport to cover all possible methods. As yet another example, the '025 patent purports to claim all possible demultiplexers, combiners, memories, selectors, and motion compensators, a person of ordinary skill in the art could not implement all possible combinations of these components without undue experimentation.

To the extent the following limitations are definite (under 35 U.S.C. § 112, ¶ 2), the application that became the '025 Patent fails to sufficiently describe or enable them as required by

35 U.S.C. § 112, ¶ 1:[32]

Term	Relevant Claim(s)
"a combine program code to combine the first predictive picture and the decoded residual picture to generate a decoded moving-picture signal"	7, 8
"a combiner to combine the first predictive picture and the decoded residual picture to generate a decoded moving picture signal"	6
"a decoding controller to receive decoding control data for decoding control from the parameter data and control the selector to switch the predictive picture to be supplied to the combiner between the first and second predictive pictures according to the decoding control data"	6
"a decoding controlling program code to receive decoding control data for decoding control from the parameter data and control the selector to switch the predictive picture to be supplied to the combiner between the first and second predictive pictures according to the decoding control data"	8
"a memory to store the decoded moving-picture signal for at least one picture as a reference picture"	6
"a motion compensation program code to specify a corresponding rectangular zone in the reference picture based on the motion-vector data, thus generating a second predictive picture"	8
"a motion compensator to specify a corresponding rectangular zone in the reference picture based on the motion-vector data, thus generating a second predictive picture"	6
"a non-transitory computer readable device having stored thereon a computer program comprising a set of instructions when executed by a computer to implement a method for moving-picture decoding"	7, 8
"a plurality of rectangular zones, each composed of a specific number of pixels, into which a video area of the moving-picture video signal is divided"	6, 7, 8, 10
"a selector to select either the first predictive picture or the second predictive picture and supply the predictive picture thus selected to the combiner"	6
"a zone-border motion compensation program code to define a boundary condition of a border that corresponds to the border motion vector data, from the reference picture based on the border motion-vector data, and generate an estimated video signal in each rectangular zone in the picture to be coded, that satisfies Poisson's Equation, thus producing a first predictive picture"	7, 8

[32] Listed claims also include all Asserted Claims dependent thereon, even if those claims are not individually listed.

Term	Relevant Claim(s)
"a zone-border motion compensator to define a boundary condition of a border that corresponds to the border motion vector data, from the reference picture based on the border motion-vector data, and generate an estimated video signal in each rectangular zone in the picture to be coded, that satisfies Poisson's Equation, thus producing a first predictive picture"	6
"an entropy decoder to perform entropy decoding to the data thus demultiplexed to generate, at least, motion-vector data, the post-quantization data, the border motion-vector data and parameter data required for constructing a specific syntax structure"	6
"an entropy decoding program code to perform entropy decoding to the data thus demultiplexed to generate, at least, the post-quantization data, the border motion-vector data and parameter data required for constructing a specific syntax structure"	7, 8
"an inverse-orthogonal transform program code to perform inverse-orthogonal transform to the post-quantization orthogonal transform coefficients data to produce a decoded residual picture of one video area"	7, 8
"an inverse-orthogonal transformer to perform inverse-orthogonal transform to the post-quantization orthogonal transform coefficients data to produce a decoded residual picture of one video area"	6
"an inverse-quantization program code to perform inverse-quantization to the post-quantization data to generate post-quantization orthogonal transform coefficients data"	7, 8
"an inverse-quantizer to perform inverse-quantization to the post-quantization data to generate post-quantization orthogonal transform coefficients data"	6
"combining the first predictive picture and the decoded residual picture to generate a decoded moving-picture signal"	10
"defining a boundary condition of a border that corresponds to the border motion vector data, from the reference picture based on the border motion-vector data, and generate an estimated video signal in each rectangular zone in the picture to be coded, that satisfies Poisson's Equation, thus producing a predictive picture"	10
"defining a boundary condition of a border that corresponds to the border motion vector data, from the reference picture based on the border motionvector data"	6, 7, 8, 10
"demultiplex program code to demultiplex coded data from an input signal based on a specific syntax structure"	7, 8
"demultiplexer to demultiplex coded data from an input signal based on a specific syntax structure"	6
"demultipling coded data from an input signal based on a specific syntax structure"	10

Term	Relevant Claim(s)
"finding a border, of the reference picture, having a boundary condition that matches the boundary condition, by motion-vector search in the reference picture"	6, 7, 8, 10
"generating an estimated video signal in each rectangular zone in the picture to be coded, that satisfies Poisson's Equation, thus producing the predictive picture"	6, 7, 8, 10
"generating the border motion-vector data that is data on a motion vector from a border of the rectangular zone in the picture to be coded to the border of the reference picture thus found"	6, 7, 8, 10
"moving-picture decoding apparatus"	6, 10
"obtaining a boundary condition of each of a plurality of borders between the rectangular zones and another plurality of rectangular zones adjacent to the rectangular zones"	6, 7, 8, 10
"performing entropy decoding to the data thus demultiplexed to generate, at least, the post-quantization data, the border motion-vector data and parameter data required for constructing a specific syntax structure"	10
"performing inverse-orthogonal transform to the post-quantization orthogonal transform coefficients data to produce a decoded residual picture of one video area"	10
"performing inverse-quantization to the post-quantization data to generate post-quantization orthogonal transform coefficients data"	10
"selection program code to select either the first predictive picture or the second predictive picture and supply the predictive picture thus selected to the combiner"	8
"storing the decoded moving-picture signal for at least one picture as a reference picture"	10
"the coded bitstream obtained by producing and encoding a residual picture that is a residual signal between a picture to be coded that is an input moving-picture video signal to be subjected to coding and a predictive picture produced from a reference picture that is a local decoded video signal for each of a plurality of rectangular zones"	6, 7, 8, 10
"the decoded moving-picture signal for at least one picture being stored as a reference picture"	7, 8
"the entropy decoding program code further generates motion-vector data"	8
"the input signal being obtained by multiplexing a coded bitstream obtained by predictive coding, border motion-vector data and post-quantization data obtained by quantization in the predictive coding"	6, 7, 8, 10
"zone-border motion compensation program code"	7, 8
"zone-border motion compensator"	6

2. Invalidity Under 35 U.S.C. § 112, ¶ 2

"[T]he second paragraph of § 112 contains two requirements: first, the claim must set forth what the applicant regards as his invention, and second, it must do so with sufficient particularity and distinctness, *i.e.*, the claim must be sufficiently definite." *Allen Eng'g Corp. v. Bartell Indus., Inc.*, 299 F.3d 1336, 1348 (Fed. Cir. 2002) (internal quotation marks and alteration omitted). "Where it would be apparent to one of skill in the art, based on the specification, that the invention set forth in a claim is not what the patentee regarded as his invention," the claim is "invalid under § 112, paragraph 2." *Id.* at 1349. Several of the '025 Patent Asserted Claims are invalid because it would be apparent to one of skill in the art, based on the specification, that the invention set forth in these claims are not what the patentee regarded as his invention, at least as the claims are being asserted by the Plaintiff. *Id.* These claims are invalid under the "applicant regards" prong of § 112 at least because they contain elements that differ from and/or conflict with the '025 Patent's written description of the invention, at least as the claim elements are being asserted by Plaintiff, or because they omit elements that one of skill in the art would understand as part of the '025 Patent's invention based on the specification: 6, 7, 8, and 10.

Independently, under § 112, ¶ 2, "a patent is invalid for indefiniteness if its claims, read in light of the specification delineating the patent, and the prosecution history, fail to inform, with reasonable certainty, those skilled in the art about the scope of the invention." *Nautilus, Inc. v. Biosig Instruments, Inc.*, 572 U.S. 898, 901 (2014). In addition, for claim elements expressed as a means or step for performing a specified function without the recital of specific structure, material, or acts in support thereof, the written description of the patent must disclose with sufficient particularity the corresponding structure for performing the claimed function, and it must clearly link that structure to the claimed function. *Ibormeith IP, LLC v. Mercedes-Benz USA, LLC*, 732 F.3d 1376, 1379 (Fed. Cir. 2013). Otherwise, the claim is indefinite. *Id.* Several of the '025

Patent Asserted Claims are also invalid as indefinite under § 112, ¶ 2 because they fail to inform those skilled in the art about the scope of the invention with reasonable certainty and are indefinite and/or because they recite performing a specific function without reciting specific structure, material, or acts for performing the function, and the specification fails to provide the required disclosure.

The following limitations recited in the '025 Patent Asserted Claims are indefinite in whole, in part or in combination:[33]

Term	Relevant Claim(s)
"a combine program code to combine the first predictive picture and the decoded residual picture to generate a decoded moving-picture signal"	7, 8
"a combiner to combine the first predictive picture and the decoded residual picture to generate a decoded moving picture signal"	6
"a decoding controller to receive decoding control data for decoding control from the parameter data and control the selector to switch the predictive picture to be supplied to the combiner between the first and second predictive pictures according to the decoding control data"	6
"a decoding controlling program code to receive decoding control data for decoding control from the parameter data and control the selector to switch the predictive picture to be supplied to the combiner between the first and second predictive pictures according to the decoding control data"	8
"a memory to store the decoded moving-picture signal for at least one picture as a reference picture"	6
"a motion compensation program code to specify a corresponding rectangular zone in the reference picture based on the motion-vector data, thus generating a second predictive picture"	8
"a motion compensator to specify a corresponding rectangular zone in the reference picture based on the motion-vector data, thus generating a second predictive picture"	6
"a non-transitory computer readable device having stored thereon a computer program comprising a set of instructions when executed by a computer to implement a method for moving-picture decoding"	7, 8

[33] Listed claims also include all Asserted Claims dependent thereon, even if those claims are not individually listed.

Term	Relevant Claim(s)
“a plurality of rectangular zones, each composed of a specific number of pixels, into which a video area of the moving-picture video signal is divided”	6, 7, 8, 10
“a selector to select either the first predictive picture or the second predictive picture and supply the predictive picture thus selected to the combiner”	6
“a zone-border motion compensation program code to define a boundary condition of a border that corresponds to the border motion vector data, from the reference picture based on the border motion-vector data, and generate an estimated video signal in each rectangular zone in the picture to be coded, that satisfies Poisson's Equation, thus producing a first predictive picture”	7, 8
“a zone-border motion compensator to define a boundary condition of a border that corresponds to the border motion vector data, from the reference picture based on the border motion-vector data, and generate an estimated video signal in each rectangular zone in the picture to be coded, that satisfies Poisson's Equation, thus producing a first predictive picture”	6
“an entropy decoder to perform entropy decoding to the data thus demultiplexed to generate, at least, motion-vector data, the post-quantization data, the border motion-vector data and parameter data required for constructing a specific syntax structure”	6
“an entropy decoding program code to perform entropy decoding to the data thus demultiplexed to generate, at least, the post-quantization data, the border motion-vector data and parameter data required for constructing a specific syntax structure”	7, 8
“an inverse-orthogonal transform program code to perform inverse-orthogonal transform to the post-quantization orthogonal transform coefficients data to produce a decoded residual picture of one video area”	7, 8
“an inverse-orthogonal transformer to perform inverse-orthogonal transform to the post-quantization orthogonal transform coefficients data to produce a decoded residual picture of one video area”	6
“an inverse-quantization program code to perform inverse-quantization to the post-quantization data to generate post-quantization orthogonal transform coefficients data”	7, 8
“an inverse-quantizer to perform inverse-quantization to the post-quantization data to generate post-quantization orthogonal transform coefficients data”	6
“combining the first predictive picture and the decoded residual picture to generate a decoded moving-picture signal”	10
“defining a boundary condition of a border that corresponds to the border motion vector data, from the reference picture based on the border motion-vector data, and generate an estimated video signal	10

Term	Relevant Claim(s)
in each rectangular zone in the picture to be coded, that satisfies Poisson's Equation, thus producing a predictive picture”	
“defining a boundary condition of a border that corresponds to the border motion vector data, from the reference picture based on the border motionvector data”	6, 7, 8, 10
“demultiplex program code to demultiplex coded data from an input signal based on a specific syntax structure”	7, 8
“demultiplexer to demultiplex coded data from an input signal based on a specific syntax structure”	6
“demultipling coded data from an input signal based on a specific syntax structure”	10
“finding a border, of the reference picture, having a boundary condition that matches the boundary condition, by motion-vector search in the reference picture”	6, 7, 8, 10
“generating an estimated video signal in each rectangular zone in the picture to be coded, that satisfies Poisson's Equation, thus producing the predictive picture”	6, 7, 8, 10
“generating the border motion-vector data that is data on a motion vector from a border of the rectangular zone in the picture to be coded to the border of the reference picture thus found”	6, 7, 8, 10
“moving-picture decoding apparatus”	6, 10
“obtaining a boundary condition of each of a plurality of borders between the rectangular zones and another plurality of rectangular zones adjacent to the rectangular zones”	6, 7, 8, 10
“performing entropy decoding to the data thus demultiplexed to generate, at least, the post-quantization data, the border motion-vector data and parameter data required for constructing a specific syntax structure”	10
“performing inverse-orthogonal transform to the post-quantization orthogonal transform coefficients data to produce a decoded residual picture of one video area”	10
“performing inverse-quantization to the post-quantization data to generate post-quantization orthogonal transform coefficients data”	10
“selection program code to select either the first predictive picture or the second predictive picture and supply the predictive picture thus selected to the combiner”	8
“storing the decoded moving-picture signal for at least one picture as a reference picture”	10
“the coded bitstream obtained by producing and encoding a residual picture that is a residual signal between a picture to be coded that is an input moving-picture video signal to be subjected to coding and a predictive picture produced from a reference picture that is a local decoded video signal for each of a plurality of rectangular zones”	6, 7, 8, 10

Term	Relevant Claim(s)
"the decoded moving-picture signal for at least one picture being stored as a reference picture"	7, 8
"the entropy decoding program code further generates motion-vector data"	8
"the input signal being obtained by multiplexing a coded bitstream obtained by predictive coding, border motion-vector data and post-quantization data obtained by quantization in the predictive coding"	6, 7, 8, 10
"zone-border motion compensation program code"	7, 8
"zone-border motion compensator"	6

C. U.S. Patent No. 8,139,150

Pursuant to Rule 3-3(d), Defendants hereby identify grounds of invalidity for the '150 Patent based on lack of written description under 35 U.S.C. § 112, first paragraph; lack of enablement under 35 U.S.C. § 112, first paragraph; indefiniteness under 35 U.S.C. § 112, second paragraph; and indefiniteness under 35 U.S.C. § 112, sixth paragraph. These contentions shall not be construed as an admission that any claim construction advanced by Defendants in this case is in any way inconsistent, flawed, or erroneous. Nor should these contentions prevent Defendants from advancing claim construction and/or non-infringement positions in lieu of, or in addition to, invalidity positions. Further, these contentions shall not be construed as an admission of or acquiescence to Plaintiff's purported construction of the claim language or of other positions advanced by Plaintiff during the course of this litigation. Defendants' invalidity contentions under 35 U.S.C. § 112 may depend, in part, on the Court's claim construction, as well as Plaintiff's alleged scope of the '150 Patent Asserted Claims. Consequently, Defendants only identify the issues under 35 U.S.C. § 112 of which they are presently aware.

1. Lack of Written Description and/or Enablement Under 35 U.S.C. § 112, ¶ 1

The '150 Patent does not provide sufficient written description to establish that the inventors were in possession of the alleged inventions recited in the '150 Patent Asserted Claims

at the time the ’150 Patent was filed, at least as plaintiff appears to be asserting those limitations. *Ariad Pharms., Inc. v. Eli Lilly & Co.*, 598 F.3d 1336, 1351 (Fed. Cir. 2010). In other words, the applicants did not describe their purported inventions in a manner that “reasonably conveys to those skilled in the art that the inventor had possession of the claimed subject matter as of the filing date.” *Id.* One of ordinary skill in the art would not have understood that the inventors were in possession of the full scope of the claimed apparatus and methods, at least as plaintiff appears to be asserting the claims. For example, the claims of the ’150 patent do not provide sufficient written description of the limitations listed below. One of ordinary skill in the art would not understand the specification to provide a written description of pictures corresponding to different viewpoints, and/or base viewpoints, including viewpoints encoded without referring to a viewpoint or base viewpoint. As another example, one of ordinary skill in the art would not understand the specification to provide a written description of the claimed computation of desired delay time and/or computation of desired delay time corresponding to viewpoints or base viewpoints.

The specification of the ’150 Patent also does not enable one of ordinary skill in the art to make and/or use certain recited elements of the ’150 Patent Asserted Claims without undue experimentation, at least as plaintiff appears to be asserting those limitations. For example, the claims of the ’150 patent fail to sufficiently enable the limtiations listed below. One of ordinary skill in the art would not understand the specification to enable pictures corresponding to different viewpoints, and/or base viewpoints and/or computation of desired delay time. To the extent the following limitations are definite (under 35 U.S.C. § 112, ¶ 2), the application that became the ’150 Patent fails to sufficiently describe or enable them as required by 35 U.S.C. § 112,:[34]

[34] Listed claims also include all Asserted Claims dependent thereon, even if those claims are not individually listed.

Term	Relevant Claim(s)
"coded signals resulting from encoding picture signals"	1-4
"picture signals corresponding to different viewpoints respectively"	1-4
"a base viewpoint, the base viewpoint corresponding to a picture signal which is encoded without referring to at least one picture signal corresponding to one of the viewpoints except the base viewpoint"	1-4
"picture signals corresponding to the viewpoints except the base viewpoint"	1-4
"non-transitory computer program"	3
"computer readable medium"	3
"computing a desired delay time of the start of decoding a coded signal originating from each of the picture signals corresponding to the viewpoints except the base viewpoint relative to the start of decoding a coded signal originating from the picture signal corresponding to the base viewpoint in response to the recovered view dependencies"	4
"An apparatus for decoding a coded multi-view video signal including coded signals resulting from encoding picture signals corresponding to different viewpoints respectively, wherein at least one among the viewpoints is designated as a base viewpoint, the base viewpoint corresponding to a picture signal which is encoded without referring to at least one picture signal corresponding to one of the viewpoints except the base viewpoint, and wherein the coded multi-view video signal contains coded information representing a desired delay time of the start of decoding a coded signal originating from each of the picture signals corresponding to the viewpoints except the base viewpoint relative to the start of decoding a coded signal originating from the picture signal corresponding to the base viewpoint, the apparatus comprising:"	1
"A method of decoding a coded multi-view video signal including coded signals resulting from encoding picture signals corresponding to different viewpoints respectively, wherein at least one among the viewpoints is designated as a base viewpoint, the base viewpoint corresponding to a picture signal which is encoded without referring to at least one picture signal corresponding to one of the viewpoints except the base viewpoint, and wherein the coded multi-view video signal contains coded information representing a desired delay time of the start of decoding a coded signal originating from each of the picture signals corresponding to the viewpoints except the base viewpoint relative to the start of decoding a coded signal originating from the picture signal corresponding to the base viewpoint, the method comprising the steps of:"	2
"A non-transitory computer program stored in a computer readable medium for decoding a coded multi-view video signal including	3

Term	Relevant Claim(s)
coded signals resulting from encoding picture signals corresponding to different viewpoints respectively, wherein at least one among the viewpoints is designated as a base viewpoint, the base viewpoint corresponding to a picture signal which is encoded without referring to at least one picture signal corresponding to one of the viewpoints except the base viewpoint, and wherein the coded multi-view video signal contains coded information representing a desired delay time of the start of decoding a coded signal originating from each of the picture signals corresponding to the viewpoints except the base viewpoint relative to the start of decoding a coded signal originating from the picture signal corresponding to the base viewpoint, the computer program comprising the steps of:"	
"A method of decoding a coded multi-view video signal including coded signals resulting from encoding picture signals corresponding to different viewpoints respectively, wherein at least one among the viewpoints is designated as a base viewpoint, the base viewpoint corresponding to a picture signal which is encoded without referring to at least one picture signal corresponding to one of the viewpoints except the base viewpoint, and wherein the coded multi-view video signal contains coded information about view dependencies representing which of the picture signals are referred to as reference signals for the encoding of each of the picture signals, the method comprising the steps of:"	4
"first means for decoding the coded information in the coded multi-view video signal to recover the desired delay times for the coded signals originating from the picture signals corresponding to the viewpoints except the base viewpoint;"	1
"third means for decoding the coded signals originating from the picture signals corresponding to the viewpoints except the base viewpoint; and"	1
"decoding the coded information in the coded multi-view video signal to recover the desired delay times for the coded signals originating from the picture signals corresponding to the viewpoints except the base viewpoint;"	2-3
"decoding the coded signals originating from the picture signals corresponding to the viewpoints except the base viewpoint; and"	2-4
"delaying the decoding of the coded signals originating from the picture signals corresponding to the viewpoints except the base viewpoint relative to the decoding of the coded signal originating from the picture signal corresponding to the base viewpoint by time intervals equal to the recovered desired delay times."	2-3
"computing a desired delay time of the start of decoding a coded signal originating from each of the picture signals corresponding to the viewpoints except the base viewpoint relative to the start of	4

Term	Relevant Claim(s)
decoding a coded signal originating from the picture signal corresponding to the base viewpoint in response to the recovered view dependencies;"	
"delaying the decoding of the coded signals originating from the picture signals corresponding to the viewpoints except the base viewpoint relative to the decoding of the coded signal originating from the picture signal corresponding to the base viewpoint by time intervals equal to the computed desired delay times."	4
"the viewpoints except the base viewpoint"	1-4
"reference signals"	4

2. Invalidity Under 35 U.S.C. § 112, ¶ 2

"[T]he second paragraph of § 112 contains two requirements: first, the claim must set forth what the applicant regards as his invention, and second, it must do so with sufficient particularity and distinctness, *i.e.*, the claim must be sufficiently definite." *Allen Eng'g Corp. v. Bartell Indus., Inc.*, 299 F.3d 1336, 1348 (Fed. Cir. 2002) (internal quotation marks and alteration omitted). "Where it would be apparent to one of skill in the art, based on the specification, that the invention set forth in a claim is not what the patentee regarded as his invention," the claim is "invalid under § 112, paragraph 2." *Id.* at 1349. Several of the '150 Patent Asserted Claims are invalid because it would be apparent to one of skill in the art, based on the specification, that the invention set forth in these claims are not what the patentee regarded as his invention, at least as the claims are being asserted by the Plaintiff. *Id.* These claims are invalid under the "applicant regards" prong of § 112 at least because they contain elements that differ from and/or conflict with the '150 Patent's written description of the invention, at least as the claim elements are being asserted by Plaintiff, or because they omit elements that one of skill in the art would understand as part of the '150 Patent's invention based on the specification: 1-4.

Independently, under § 112, ¶ 2, "a patent is invalid for indefiniteness if its claims, read in light of the specification delineating the patent, and the prosecution history, fail to inform, with

reasonable certainty, those skilled in the art about the scope of the invention." *Nautilus, Inc. v. Biosig Instruments, Inc.*, 572 U.S. 898, 901 (2014). Several of the '150 Patent Asserted Claims are also invalid as indefinite under § 112, ¶ 2 because they fail to inform those skilled in the art about the scope of the invention with reasonable certainty and are indefinite.

The following limitations recited in the '150 Patent Asserted Claims are indefinite in whole, in part or in combination:[35]

Term	Relevant Claim(s)
"the viewpoints except the base viewpoint"	1-4
"reference signals"	4
"coded signals resulting from encoding picture signals"	1-4
"picture signals corresponding to different viewpoints respectively"	1-4
"a base viewpoint, the base viewpoint corresponding to a picture signal which is encoded without referring to at least one picture signal corresponding to one of the viewpoints except the base viewpoint"	1-4
"picture signals corresponding to the viewpoints except the base viewpoint"	1-4
"non-transitory computer program"	3
"computer readable medium"	3
"computing a desired delay time of the start of decoding a coded signal originating from each of the picture signals corresponding to the viewpoints except the base viewpoint relative to the start of decoding a coded signal originating from the picture signal corresponding to the base viewpoint in response to the recovered view dependencies"	4
"An apparatus for decoding a coded multi-view video signal including coded signals resulting from encoding picture signals corresponding to different viewpoints respectively, wherein at least one among the viewpoints is designated as a base viewpoint, the base viewpoint corresponding to a picture signal which is encoded without referring to at least one picture signal corresponding to one of the viewpoints except the base viewpoint, and wherein the coded multi-view video signal contains coded information representing a desired delay time of the start of decoding a coded signal originating from each of the picture signals corresponding to the viewpoints except the base viewpoint relative to the start of	1

[35] Listed claims also include all Asserted Claims dependent thereon, even if those claims are not individually listed.

Term	Relevant Claim(s)
decoding a coded signal originating from the picture signal corresponding to the base viewpoint, the apparatus comprising:”	
“A method of decoding a coded multi-view video signal including coded signals resulting from encoding picture signals corresponding to different viewpoints respectively, wherein at least one among the viewpoints is designated as a base viewpoint, the base viewpoint corresponding to a picture signal which is encoded without referring to at least one picture signal corresponding to one of the viewpoints except the base viewpoint, and wherein the coded multi-view video signal contains coded information representing a desired delay time of the start of decoding a coded signal originating from each of the picture signals corresponding to the viewpoints except the base viewpoint relative to the start of decoding a coded signal originating from the picture signal corresponding to the base viewpoint, the method comprising the steps of:”	2
“A non-transitory computer program stored in a computer readable medium for decoding a coded multi-view video signal including coded signals resulting from encoding picture signals corresponding to different viewpoints respectively, wherein at least one among the viewpoints is designated as a base viewpoint, the base viewpoint corresponding to a picture signal which is encoded without referring to at least one picture signal corresponding to one of the viewpoints except the base viewpoint, and wherein the coded multi-view video signal contains coded information representing a desired delay time of the start of decoding a coded signal originating from each of the picture signals corresponding to the viewpoints except the base viewpoint relative to the start of decoding a coded signal originating from the picture signal corresponding to the base viewpoint, the computer program comprising the steps of:”	3
“A method of decoding a coded multi-view video signal including coded signals resulting from encoding picture signals corresponding to different viewpoints respectively, wherein at least one among the viewpoints is designated as a base viewpoint, the base viewpoint corresponding to a picture signal which is encoded without referring to at least one picture signal corresponding to one of the viewpoints except the base viewpoint, and wherein the coded multi-view video signal contains coded information about view dependencies representing which of the picture signals are referred to as reference signals for the encoding of each of the picture signals, the method comprising the steps of:”	4
“first means for decoding the coded information in the coded multi-view video signal to recover the desired delay times for the coded	1

Term	Relevant Claim(s)
signals originating from the picture signals corresponding to the viewpoints except the base viewpoint;"	
"third means for decoding the coded signals originating from the picture signals corresponding to the viewpoints except the base viewpoint; and"	1
"decoding the coded information in the coded multi-view video signal to recover the desired delay times for the coded signals originating from the picture signals corresponding to the viewpoints except the base viewpoint;"	2-3
"decoding the coded signals originating from the picture signals corresponding to the viewpoints except the base viewpoint; and"	2-4
"delaying the decoding of the coded signals originating from the picture signals corresponding to the viewpoints except the base viewpoint relative to the decoding of the coded signal originating from the picture signal corresponding to the base viewpoint by time intervals equal to the recovered desired delay times."	2-3
"computing a desired delay time of the start of decoding a coded signal originating from each of the picture signals corresponding to the viewpoints except the base viewpoint relative to the start of decoding a coded signal originating from the picture signal corresponding to the base viewpoint in response to the recovered view dependencies;"	4
"delaying the decoding of the coded signals originating from the picture signals corresponding to the viewpoints except the base viewpoint relative to the decoding of the coded signal originating from the picture signal corresponding to the base viewpoint by time intervals equal to the computed desired delay times."	4

3. Indefiniteness Under 35 U.S.C. § 112, ¶ 6

Section 112, ¶ 6 allows a patentee to express a claim element "as a means or step for performing a specified function without the recital of structure, material, or acts in support thereof." 35 U.S.C. § 112, ¶ 6. For such claims, the written description of the patent must disclose with sufficient particularity the corresponding structure for performing the claimed function, and it must clearly link that structure to the claimed function. *Ibormeith IP, LLC v. Mercedes-Benz USA, LLC*, 732 F.3d 1376, 1379 (Fed. Cir. 2013).

Several of the '150 Patent Asserted Claims are invalid under § 112, ¶ 6 because they contain means-plus-function terms and the '150 Patent fails to disclose with sufficient particularity

the corresponding structure for performing the claimed function.

The following limitations recited in the '150 Patent Asserted Claims are indefinite in whole, in part or in combination:[36]

Term	Relevant Claim(s)
"An apparatus for decoding a coded multi-view video signal including coded signals resulting from encoding picture signals corresponding to different viewpoints respectively, wherein at least one among the viewpoints is designated as a base viewpoint, the base viewpoint corresponding to a picture signal which is encoded without referring to at least one picture signal corresponding to one of the viewpoints except the base viewpoint, and wherein the coded multi-view video signal contains coded information representing a desired delay time of the start of decoding a coded signal originating from each of the picture signals corresponding to the viewpoints except the base viewpoint relative to the start of decoding a coded signal originating from the picture signal corresponding to the base viewpoint, the apparatus comprising:"	1
"first means for decoding the coded information in the coded multi-view video signal to recover the desired delay times for the coded signals originating from the picture signals corresponding to the viewpoints except the base viewpoint"	1
"second means for decoding the coded signal originating from the picture signal corresponding to the base viewpoint"	1
"third means for decoding the coded signals originating from the picture signals corresponding to the viewpoints except the base viewpoint"	1
"fourth means for delaying the decoding of the coded signals by the third means relative to the decoding of the coded signal by the second means by time intervals equal to the desired delay times recovered by the first means"	1

D. U.S. Patent No. 9,445,041

Pursuant to Rule 3-3(d), Defendants hereby identify grounds of invalidity for the '041 Patent based on lack of written description under 35 U.S.C. § 112, first paragraph; lack of enablement under 35 U.S.C. § 112, first paragraph; indefiniteness under 35 U.S.C. § 112, second

[36] Listed claims also include all Asserted Claims dependent thereon, even if those claims are not individually listed.

paragraph; and indefiniteness under 35 U.S.C. § 112, sixth paragraph. These contentions shall not be construed as an admission that any claim construction advanced by Defendants in this case is in any way inconsistent, flawed, or erroneous. Nor should these contentions prevent Defendants from advancing claim construction and/or non-infringement positions in lieu of, or in addition to, invalidity positions. Further, these contentions shall not be construed as an admission of or acquiescence to Plaintiff's purported construction of the claim language or of other positions advanced by Plaintiff during the course of this litigation. Defendants' invalidity contentions under 35 U.S.C. § 112 may depend, in part, on the Court's claim construction, as well as Plaintiff's alleged scope of the '041 Patent Asserted Claims. Consequently, Defendants only identify the issues under 35 U.S.C. § 112 of which they are presently aware.

1. Lack of Written Description and/or Enablement Under 35 U.S.C. § 112, ¶ 1

The '041 Patent does not provide sufficient written description to establish that the inventors were in possession of the alleged inventions recited in the '041 Patent Asserted Claims at the time the '041 Patent was filed, at least as plaintiff appears to be asserting those limitations. *Ariad Pharms., Inc. v. Eli Lilly & Co.*, 598 F.3d 1336, 1351 (Fed. Cir. 2010). In other words, the applicants did not describe their purported inventions in a manner that "reasonably conveys to those skilled in the art that the inventor had possession of the claimed subject matter as of the filing date." *Id.* One of ordinary skill in the art would not have understood that the inventors were in possession of the full scope of the claimed apparatus and methods, at least as plaintiff appears to be asserting the claims. For example, the claims of the '041 Patent do not provide sufficient written description of the limitations listed below. One of ordinary skill in the art would not understand the specification to provide a written description of specifying and changing each of a first frame rate, an output frame rate, and a playback speed except for the arbitrary setting of a frame rate by

a device and/or setting the recording frame rate, the playback frame rate and the valid frame upon the generation of the image data. As another example, one of ordinary skill in the art would not understand the specification to provide a written description of the claimed output of the first and second image data.

The specification of the ’041 Patent also does not enable one of ordinary skill in the art to make and/or use certain recited elements of the ’041 Patent Asserted Claims without undue experimentation, at least as plaintiff appears to be asserting those limitations. For example, the claims of the ’041 Patent fail to sufficiently enable the limitations listed below. One of ordinary skill in the art would not understand the specification to enable specifying and changing each of a first frame rate, an output frame rate, and a playback speed except for the arbitrary setting of a frame rate by a device and/or setting the recording frame rate, the playback frame rate and the valid frame upon the generation of the image data. To the extent the following limitations are definite (under 35 U.S.C. § 112, ¶ 2), the application that became the ’041 Patent fails to sufficiently describe or enable them as required by 35 U.S.C. § 112, ¶ 1:[37]

Term	Relevant Claim(s)
“[specify/specifying] the first frame rate of the first moving image data and the second frame rate of the second moving image data”	Claims 1, 6
“[specify/specifying] output frame rate of the first moving image data and output frame rate of the second moving image data that have been input into the moving image data input unit”	Claims 1, 6
“[specify/specifying] a same playback speed for the first moving image data and the second moving image data”	Claims 1, 6
“[change/changing] a frame rate of the first moving image data based on the first frame rate, the output frame rate, and the playback speed”	Claims 1, 6
“[change/changing] a frame rate of the second moving image data based on the second frame rate, the output frame rate, and the playback speed”	Claims 1, 6

[37] Listed claims also include all Asserted Claims dependent thereon, even if those claims are not individually listed.

Term	Relevant Claim(s)
"[outputs/outputting] the first and second moving image data whose frame rates have been converted by the frame rate conversion unit."	Claims 1, 6

2. Invalidity Under 35 U.S.C. § 112, ¶ 2

"[T]he second paragraph of § 112 contains two requirements: first, the claim must set forth what the applicant regards as his invention, and second, it must do so with sufficient particularity and distinctness, *i.e.*, the claim must be sufficiently definite." *Allen Eng'g Corp. v. Bartell Indus., Inc.*, 299 F.3d 1336, 1348 (Fed. Cir. 2002) (internal quotation marks and alteration omitted). "Where it would be apparent to one of skill in the art, based on the specification, that the invention set forth in a claim is not what the patentee regarded as his invention," the claim is "invalid under § 112, paragraph 2." *Id.* at 1349. Several of the '041 Patent Asserted Claims are invalid because it would be apparent to one of skill in the art, based on the specification, that the invention set forth in these claims are not what the patentee regarded as his invention, at least as the claims are being asserted by the Plaintiff. *Id.* These claims are invalid under the "applicant regards" prong of § 112 at least because they contain elements that differ from and/or conflict with the '041 Patent's written description of the invention, at least as the claim elements are being asserted by Plaintiff, or because they omit elements that one of skill in the art would understand as part of the '041 Patent's invention based on the specification: Claims 1 and 6.

Independently, under § 112, ¶ 2, "a patent is invalid for indefiniteness if its claims, read in light of the specification delineating the patent, and the prosecution history, fail to inform, with reasonable certainty, those skilled in the art about the scope of the invention." *Nautilus, Inc. v. Biosig Instruments, Inc.*, 572 U.S. 898, 901 (2014). Several of the '041 Patent Asserted Claims are also invalid as indefinite under § 112, ¶ 2 because they fail to inform those skilled in the art about the scope of the invention with reasonable certainty and are indefinite.

The following limitations recited in the '041 Patent Asserted Claims are indefinite in whole, in part or in combination:[38]

Term	Relevant Claim(s)
"[specify/specifying] the first frame rate of the first moving image data and the second frame rate of the second moving image data"	Claims 1, 6
"[specify/specifying] output frame rate of the first moving image data and output frame rate of the second moving image data that have been input into the moving image data input unit"	Claims 1, 6
"[specify/specifying] a same playback speed for the first moving image data and the second moving image data"	Claims 1, 6
"[change/changing] a frame rate of the first moving image data based on the first frame rate, the output frame rate, and the playback speed"	Claims 1, 6
"[change/changing] a frame rate of the second moving image data based on the second frame rate, the output frame rate, and the playback speed"	Claims 1, 6
"[outputs/outputting] the first and second moving image data whose frame rates have been converted by the frame rate conversion unit."	Claims 1, 6
"second image data" / "second moving image data"	Claims 1, 6

3. Indefiniteness Under 35 U.S.C. § 112, ¶ 6

Section 112, ¶ 6 allows a patentee to express a claim element "as a means or step for performing a specified function without the recital of structure, material, or acts in support thereof." 35 U.S.C. § 112, ¶ 6. For such claims, the written description of the patent must disclose with sufficient particularity the corresponding structure for performing the claimed function, and it must clearly link that structure to the claimed function. *Ibormeith IP, LLC v. Mercedes-Benz USA, LLC*, 732 F.3d 1376, 1379 (Fed. Cir. 2013).

Several of the '041 Patent Asserted Claims are invalid under § 112, ¶ 6 because they contain means-plus-function terms and the '041 Patent fails to disclose with sufficient particularity the corresponding structure for performing the claimed function.

[38] Listed claims also include all Asserted Claims dependent thereon, even if those claims are not individually listed.

The following limitations recited in the ’041 Patent Asserted Claims are indefinite in whole, in part or in combination:[39]

Term	Relevant Claim(s)
“moving image data input unit”	Claim 1
“input frame rate specification unit”	Claim 1
“output frame rate specification unit”	Claim 1
“playback speed specification unit”	Claim 1
“frame rate conversion unit”	Claim 1
“moving image data output unit”	Claim 1
“operating unit”	Claim 2

E. U.S. Patent No. 9,986,303

Pursuant to Rule 3-3(d), Defendants hereby identify grounds of invalidity for the ’303 Patent based on lack of written description under 35 U.S.C. § 112, first paragraph; lack of enablement under 35 U.S.C. § 112, first paragraph; indefiniteness under 35 U.S.C. § 112, second paragraph; and indefiniteness under 35 U.S.C. § 112, sixth paragraph. These contentions shall not be construed as an admission that any claim construction advanced by Defendants in this case is in any way inconsistent, flawed, or erroneous. Nor should these contentions prevent Defendants from advancing claim construction and/or non-infringement positions in lieu of, or in addition to, invalidity positions. Further, these contentions shall not be construed as an admission of or acquiescence to Plaintiff’s purported construction of the claim language or of other positions advanced by Plaintiff during the course of this litigation. Defendants’ invalidity contentions under 35 U.S.C. § 112 may depend, in part, on the Court’s claim construction, as well as Plaintiff’s alleged scope of the ’303 Patent Asserted Claims. Consequently, Defendants only identify the issues under 35 U.S.C. § 112 of which they are presently aware.

1. Lack of Written Description and/or Enablement Under 35 U.S.C.

[39] Listed claims also include all Asserted Claims dependent thereon, even if those claims are not individually listed.

§ 112, ¶ 1

The ’303 Patent does not provide sufficient written description to establish that the inventors were in possession of the alleged inventions recited in the ’303 Patent Asserted Claims at the time the ’303 Patent was filed, at least as plaintiff appears to be asserting those limitations. *Ariad Pharms., Inc. v. Eli Lilly & Co.*, 598 F.3d 1336, 1351 (Fed. Cir. 2010). In other words, the applicants did not describe their purported inventions in a manner that “reasonably conveys to those skilled in the art that the inventor had possession of the claimed subject matter as of the filing date.” *Id.* One of ordinary skill in the art would not have understood that the inventors were in possession of the full scope of the claimed apparatus and methods, at least as plaintiff appears to be asserting the claims. For example, the claims of the ’303 patent do not provide sufficient written description of the limitations listed below. One of ordinary skill in the art would not understand the specification to provide a written description of receiving basic and supplemental picture data and using both types of data to decode and reconstruct a video stream.

The specification of the ’303 Patent also does not enable one of ordinary skill in the art to make and/or use certain recited elements of the ’303 Patent Asserted Claims without undue experimentation, at least as plaintiff appears to be asserting those limitations. For example, the claims of the ’303 patent fail to sufficiently enable the limtiations listed below. One of ordinary skill in the art would not understand the specification to enable receiving basic and supplemental picture data and using both types of data to decode and reconstruct a video stream. To the extent the following limitations are definite (under 35 U.S.C. § 112, ¶ 2), the application that became the ’303 Patent fails to sufficiently describe or enable them as required by 35 U.S.C. § 112, ¶ 1:[40]

[40] Listed claims also include all Asserted Claims dependent thereon, even if those claims are not individually listed.

Term	Relevant Claim(s)
"a processor"	1
"a memory unit having instructions stored which, when executed by the processor, cause the processor to perform operations"	1
"receiving basic video image coding data"	1
"a supplementary hierarchical picture"	1
"a basic hierarchical picture"	1
"a supplementary hierarchical picture whose coding order and display order are earlier by a factor of a group of pictures including an intra coded picture and a plurality of inter prediction coded pictures than those of a basic hierarchical picture"	1
"acquiring basic video image coding data"	1
"acquiring basic video image coding data received before supplementary video image coding data that has been received at the moment"	1

2. Invalidity Under 35 U.S.C. § 112, ¶ 2

"[T]he second paragraph of § 112 contains two requirements: first, the claim must set forth what the applicant regards as his invention, and second, it must do so with sufficient particularity and distinctness, *i.e.*, the claim must be sufficiently definite." *Allen Eng'g Corp. v. Bartell Indus., Inc.*, 299 F.3d 1336, 1348 (Fed. Cir. 2002) (internal quotation marks and alteration omitted). "Where it would be apparent to one of skill in the art, based on the specification, that the invention set forth in a claim is not what the patentee regarded as his invention," the claim is "invalid under § 112, paragraph 2." *Id.* at 1349. Several of the '303 Patent Asserted Claims are invalid because it would be apparent to one of skill in the art, based on the specification, that the invention set forth in these claims are not what the patentee regarded as his invention, at least as the claims are being asserted by the Plaintiff. *Id.* These claims are invalid under the "applicant regards" prong of § 112 at least because they contain elements that differ from and/or conflict with the '303 Patent's written description of the invention, at least as the claim elements are being asserted by Plaintiff, or because they omit elements that one of skill in the art would understand as part of the '303 Patent's invention based on the specification: 1.

Independently, under § 112, ¶ 2, "a patent is invalid for indefiniteness if its claims, read in light of the specification delineating the patent, and the prosecution history, fail to inform, with reasonable certainty, those skilled in the art about the scope of the invention." *Nautilus, Inc. v. Biosig Instruments, Inc.*, 572 U.S. 898, 901 (2014). Several of the '303 Patent Asserted Claims are also invalid as indefinite under § 112, ¶ 2 because they fail to inform those skilled in the art about the scope of the invention with reasonable certainty and are indefinite.

The following limitations recited in the '303 Patent Asserted Claims are indefinite in whole, in part or in combination:[41]

Term	Relevant Claim(s)
"basic video image coding data"	1
"receiving basic video image coding data"	1
"a supplementary hierarchical picture"	1
"a basic hierarchical picture"	1
"acquiring basic video image coding data received before supplementary video image coding data that has been received at the moment"	1
"reconstructing video image coding data from the basic video image coding data and the supplementary video image coding data"	1
"receiving supplementary video image coding data including a supplementary hierarchical picture whose coding order and display order are earlier by a factor of a group of pictures including an intra coded picture and a plurality of inter prediction coded pictures than those of a basic hierarchical picture included in the basic video image coding data, a basic hierarchy and a supplementary hierarchy being set in units of the group of pictures;"	1

F. U.S. Patent No. 10,218,995

Pursuant to Rule 3-3(d), Defendants hereby identify grounds of invalidity for the '995 Patent based on lack of written description under 35 U.S.C. § 112, first paragraph; lack of enablement under 35 U.S.C. § 112, first paragraph; indefiniteness under 35 U.S.C. § 112, second

[41] Listed claims also include all Asserted Claims dependent thereon, even if those claims are not individually listed.

paragraph; and indefiniteness under 35 U.S.C. § 112, sixth paragraph. These contentions shall not be construed as an admission that any claim construction advanced by Defendants in this case is in any way inconsistent, flawed, or erroneous. Nor should these contentions prevent Defendants from advancing claim construction and/or non-infringement positions in lieu of, or in addition to, invalidity positions. Further, these contentions shall not be construed as an admission of or acquiescence to Plaintiff's purported construction of the claim language or of other positions advanced by Plaintiff during the course of this litigation. Defendants' invalidity contentions under 35 U.S.C. § 112 may depend, in part, on the Court's claim construction, as well as Plaintiff's alleged scope of the '995 Patent Asserted Claims. Consequently, Defendants only identify the issues under 35 U.S.C. § 112 of which they are presently aware.

1. Lack of Written Description and/or Enablement Under 35 U.S.C. § 112, ¶ 1

The '995 Patent does not provide sufficient written description to establish that the inventors were in possession of the alleged inventions recited in the '995 Patent Asserted Claims at the time the '995 Patent was filed, at least as plaintiff appears to be asserting those limitations. *Ariad Pharms., Inc. v. Eli Lilly & Co.*, 598 F.3d 1336, 1351 (Fed. Cir. 2010). In other words, the applicants did not describe their purported inventions in a manner that "reasonably conveys to those skilled in the art that the inventor had possession of the claimed subject matter as of the filing date." *Id.* One of ordinary skill in the art would not have understood that the inventors were in possession of the full scope of the claimed apparatus and methods, at least as plaintiff appears to be asserting the claims.

For example, the '995 patent does not provide sufficient written description of the limitations listed below. As a further example, one of ordinary skill in the art would not understand the specification to provide a written description of a moving picture decoding system comprising

a demultiplexer configured to work on a sequence of input encoded bits to implement a process for a prescribed demultiplexing to output at least a first and a second sequence of encoded bits; a first decoder configured to acquire the first sequence of encoded bits obtained with a standard resolution at the demultiplexer to implement thereon a process for a prescribed first decoding to create a sequence of decoded pictures with a standard resolution; a first super-resolution enlarger configured to acquire the sequence of decoded pictures created with a standard resolution at the first decoder to work on the sequence of decoded pictures to implement an interpolation of pixels with a first enlargement to create a sequence of super-resolution enlarged decoded pictures with a first resolution higher than a standard resolution; a first resolution converter configured to acquire the sequence of super-resolution enlarged decoded pictures created at the first super-resolution enlarger to work on the sequence of super-resolution enlarged decoded pictures to implement a process for a prescribed resolution conversion to create a sequence of super-resolution decoded pictures with a standard resolution; a second decoder configured to acquire the second sequence of encoded bits obtained with a standard resolution at the demultiplexer as a set of decoding targets, the sequence of decoded pictures created with the standard resolution at the first decoder as a set of first reference pictures, and the sequence of super-resolution decoded pictures created with the standard resolution at the first resolution converter as a set of second reference pictures, and select one of the set of first reference pictures and the set of second reference pictures based on reference picture selection information to implement a combination of processes for a prescribed prediction and a prescribed second decoding being a decoding with an extension of the standard resolution, to create a sequence of super-resolution pictures decoded with the standard resolution based on the set of decoding targets and the set of selected reference pictures; and a second resolution converter configured to acquire the sequence of decoded pictures with the standard resolution from the first

decoder to work on the sequence of decoded pictures to implement an interpolation of pixels with the second enlargement to create a sequence of enlarged decoded pictures with a high resolution as a second resolution higher than the standard resolution, wherein the set of decoding targets, the set of first reference pictures, and the set of second reference pictures have the same value in spatial resolution. The specification does not disclose any embodiment corresponding to this configuration and thus fails to show that the inventors had possession of the claimed subject matter. As yet another example, one of ordinary skill in the art would not understand the specification to describe a second resolution converter configured to acquire the sequence of decoded pictures with the standard resolution from the first decoder.

The specification of the ’995 Patent also does not enable one of ordinary skill in the art to make and/or use certain recited elements of the ’995 Patent Asserted Claims without undue experimentation, at least as plaintiff appears to be asserting those limitations. For example, the ’995 patent fails to sufficiently enable the limtiations listed below. By way of further example, one of ordinary skill in the art would not understand the specification to enable implementing an interpolation of pixels with a first enlargement to create a set of super-resolution enlarged pictures with a first resolution higher than the standard resolution. As yet another example, one of ordinary skill in the art would not understand the specification to enable a second decoder configured to acquire the second sequence of encoded bits obtained with a standard resolution at the demultiplexer as a set of decoding targets, the sequence of decoded pictures created with the standard resolution at the first decoder as a set of first reference pictures, and the sequence of super-resolution decoded pictures created with the standard resolution at the first resolution converter as a set of second reference pictures, and select one of the set of first reference pictures and the set of second reference pictures based on reference picture selection information to

implement a combination of processes for a prescribed prediction and a prescribed second decoding being a decoding with an extension of the standard resolution, to create a sequence of super-resolution pictures decoded with the standard resolution based on the set of decoding targets and the set of selected reference pictures.

To the extent the following limitations are definite (under 35 U.S.C. § 112, ¶ 2), the application that became the '995 Patent fails to sufficiently describe or enable them as required by 35 U.S.C. § 112, ¶ 1:[42]

Term	Relevant Claim(s)
"a demultiplexer configured to work on a sequence of input encoded bits to implement a process for a prescribed demultiplexing to output at least a first and a second sequence of encoded bits"	2, 11
"a demultiplexer configured to work on a sequence of input encoded bits to implement a process for a prescribed demultiplexing to output at least a first and a second sequence of encoded bits"	2, 3, 4, 11
"a high resolution as a second resolution higher than the standard resolution"	2, 3, 4, 11
"acquiring the first sequence of encoded bits obtained with a standard resolution through the process for the prescribed demultiplexing, implementing thereon a process for a prescribed first decoding, creating a sequence of decoded pictures with the standard resolution"	3, 4
"acquiring the second sequence of encoded bits obtained with a standard resolution through the process for the prescribed demultiplexing as a set of decoding targets, the sequence of decoded pictures created with the standard resolution through the process for the prescribed first decoding as a set of first reference pictures, and the sequence of super-resolution decoded pictures created with the standard resolution through the process for the prescribed resolution conversion as a set of second reference pictures"	3, 4
"acquiring the sequence of decoded pictures created with the standard resolution through the process for the prescribed first decoding, working on the sequence of decoded pictures to implement an interpolation of pixels with a first enlargement,	3, 4

[42] Listed claims also include all Asserted Claims dependent thereon, even if those claims are not individually listed.

Term	Relevant Claim(s)
creating a sequence of super-resolution enlarged decoded pictures with a first resolution higher than the standard resolution”	
“acquiring the sequence of decoded pictures created with the standard resolution through the process for the prescribed first decoding[,] working on the sequence of decoded pictures to implement an interpolation of pixels with the second enlargement[,] creating a sequence of enlarged decoded pictures with a high resolution as a second resolution higher than the standard resolution”	3, 4
“acquiring the sequence of super-resolution enlarged decoded pictures created through the process for the prescribed super-resolution enlargement working on the sequence of super-resolution enlarged decoded pictures to implement a process for a first resolution conversion, creating a sequence of super-resolution decoded pictures with a standard resolution”	3, 4
“an extension of the standard resolution”	2, 3, 4, 11
“first decoder configured to acquire the first sequence of encoded bits obtained with a standard resolution at the demultiplexer to implement thereon a process for a prescribed first decoding to create a sequence of decoded pictures with a standard resolution”	2, 11
“first resolution converter configured to acquire the sequence of super-resolution enlarged decoded pictures created at the first super-resolution enlarger to work on the sequence of super-resolution enlarged decoded pictures to implement a process for a prescribed resolution conversion to create a sequence of super-resolution decoded pictures with a standard resolution”	2
“first super-resolution enlarger configured to acquire the sequence of decoded pictures created with a standard resolution at the first decoder to work on the sequence of decoded pictures to implement an interpolation of pixels with a first enlargement to create a sequence of super-resolution enlarged decoded pictures with a first resolution higher than a standard resolution”	2, 11
“high resolution”	2, 3, 4, 11
“implementing a process for a prescribed demultiplexing on a sequence of input encoded bits”	3, 4
“recording medium storing a moving picture decoding program comprising a non-transitory computer-readable medium configured to have a computer execute”	4
“second decoder configured to acquire the second sequence of encoded bits obtained with a standard resolution at the demultiplexer as a set of decoding targets”	2, 11
“second resolution converter configured to acquire the sequence of decoded pictures with the standard resolution from the first decoder to work on the sequence of decoded pictures to implement an interpolation of pixels with the second enlargement to create a	2, 11

Term	Relevant Claim(s)
sequence of enlarged decoded pictures with a high resolution as a second resolution higher than the standard resolution"	
"select one of the set of first reference pictures and the set of second reference pictures based on reference picture selection information to implement a combination of processes for a prescribed prediction and a prescribed second decoding being a decoding with an extension of the standard resolution, to create a sequence of super-resolution pictures decoded with the standard resolution based on the set of decoding targets and the set of selected reference pictures"	2, 11
"selecting one of the set of first reference pictures and the set of second reference pictures based on reference picture selection information to implement a combination of processes for a prescribed prediction and a prescribed second decoding being a decoding with an extension of the standard resolution, based on the set of decoding targets and the set of selected reference pictures to create a sequence of super-resolution pictures decoded with the standard resolution"	3, 4
"standard resolution"	2, 3, 4, 11
"super-resolution decoded pictures with a standard resolution"	2, 3, 4, 11
"super-resolution enlarged decoded pictures"	2, 3, 4, 11
"super-resolution enlarger"	2, 11
"super-resolution"	2, 3, 4, 11
"resolution"	2, 3, 4, 11
"wherein the set of decoding targets, the set of first reference pictures, and the set of second reference pictures have the same value in spatial resolution"	2, 3, 4, 11

2. Invalidity Under 35 U.S.C. § 112, ¶ 2

"[T]he second paragraph of § 112 contains two requirements: first, the claim must set forth what the applicant regards as his invention, and second, it must do so with sufficient particularity and distinctness, *i.e.*, the claim must be sufficiently definite." *Allen Eng'g Corp. v. Bartell Indus., Inc.*, 299 F.3d 1336, 1348 (Fed. Cir. 2002) (internal quotation marks and alteration omitted). "Where it would be apparent to one of skill in the art, based on the specification, that the invention set forth in a claim is not what the patentee regarded as his invention," the claim is "invalid under § 112, paragraph 2." *Id.* at 1349. Several of the '995 Patent Asserted Claims are invalid because it would be apparent to one of skill in the art, based on the specification, that the invention set forth

in these claims are not what the patentee regarded as his invention, at least as the claims are being asserted by the Plaintiff. *Id.* These claims are invalid under the "applicant regards" prong of § 112 at least because they contain elements that differ from and/or conflict with the '995 Patent's written description of the invention, at least as the claim elements are being asserted by Plaintiff, or because they omit elements that one of skill in the art would understand as part of the '995 Patent's invention based on the specification: 2, 3, 4, and 11.

Independently, under § 112, ¶ 2, "a patent is invalid for indefiniteness if its claims, read in light of the specification delineating the patent, and the prosecution history, fail to inform, with reasonable certainty, those skilled in the art about the scope of the invention." *Nautilus, Inc. v. Biosig Instruments, Inc*., 572 U.S. 898, 901 (2014). In addition, for claim elements expressed as a means or step for performing a specified function without the recital of specific structure, material, or acts in support thereof, the written description of the patent must disclose with sufficient particularity the corresponding structure for performing the claimed function, and it must clearly link that structure to the claimed function. *Ibormeith IP, LLC v. Mercedes-Benz USA, LLC*, 732 F.3d 1376, 1379 (Fed. Cir. 2013). Otherwise, the claim is indefinite. *Id.* Several of the '995 Patent Asserted Claims are also invalid as indefinite under § 112, ¶ 2 because they fail to inform those skilled in the art about the scope of the invention with reasonable certainty and are indefinite and/or because they recite performing a specific function without reciting specific structure, material, or acts for performing the function, and the specification fails to provide the required disclosure.

The following limitations recited in the '995 Patent Asserted Claims are indefinite in

whole, in part or in combination:[43]

Term	Relevant Claim(s)
"a demultiplexer configured to work on a sequence of input encoded bits to implement a process for a prescribed demultiplexing to output at least a first and a second sequence of encoded bits"	2, 11
"a first resolution higher than a standard resolution"	2, 3, 4, 11
"a high resolution as a second resolution higher than the standard resolution"	2, 3, 4, 11
"acquiring the first sequence of encoded bits obtained with a standard resolution through the process for the prescribed demultiplexing, implementing thereon a process for a prescribed first decoding, creating a sequence of decoded pictures with the standard resolution"	3, 4
"acquiring the second sequence of encoded bits obtained with a standard resolution through the process for the prescribed demultiplexing as a set of decoding targets, the sequence of decoded pictures created with the standard resolution through the process for the prescribed first decoding as a set of first reference pictures, and the sequence of super-resolution decoded pictures created with the standard resolution through the process for the prescribed resolution conversion as a set of second reference pictures"	3, 4
"acquiring the sequence of decoded pictures created with the standard resolution through the process for the prescribed first decoding, working on the sequence of decoded pictures to implement an interpolation of pixels with a first enlargement, creating a sequence of super-resolution enlarged decoded pictures with a first resolution higher than the standard resolution"	3, 4
"acquiring the sequence of decoded pictures created with the standard resolution through the process for the prescribed first decoding[,] working on the sequence of decoded pictures to implement an interpolation of pixels with the second enlargement[,] creating a sequence of enlarged decoded pictures with a high resolution as a second resolution higher than the standard resolution"	3, 4
"acquiring the sequence of super-resolution enlarged decoded pictures created through the process for the prescribed super-resolution enlargement working on the sequence of super-resolution enlarged decoded pictures to implement a process for a first resolution conversion, creating a sequence of super-resolution decoded pictures with a standard resolution"	3, 4

[43] Listed claims also include all Asserted Claims dependent thereon, even if those claims are not individually listed.

Term	Relevant Claim(s)
"an extension of the standard resolution"	2, 3, 4, 11
"first decoder configured to acquire the first sequence of encoded bits obtained with a standard resolution at the demultiplexer to implement thereon a process for a prescribed first decoding to create a sequence of decoded pictures with a standard resolution"	2, 11
"first resolution converter configured to acquire the sequence of super-resolution enlarged decoded pictures created at the first super-resolution enlarger to work on the sequence of super-resolution enlarged decoded pictures to implement a process for a prescribed resolution conversion to create a sequence of super-resolution decoded pictures with a standard resolution"	2
"first super-resolution enlarger configured to acquire the sequence of decoded pictures created with a standard resolution at the first decoder to work on the sequence of decoded pictures to implement an interpolation of pixels with a first enlargement to create a sequence of super-resolution enlarged decoded pictures with a first resolution higher than a standard resolution"	2, 11
"high resolution"	2, 3, 4, 11
"implementing a process for a prescribed demultiplexing on a sequence of input encoded bits"	3, 4
"recording medium storing a moving picture decoding program comprising a non-transitory computer-readable medium configured to have a computer execute"	4
"second decoder configured to acquire the second sequence of encoded bits obtained with a standard resolution at the demultiplexer as a set of decoding targets"	2, 11
"second resolution converter configured to acquire the sequence of decoded pictures with the standard resolution from the first decoder to work on the sequence of decoded pictures to implement an interpolation of pixels with the second enlargement to create a sequence of enlarged decoded pictures with a high resolution as a second resolution higher than the standard resolution"	2, 11
"select one of the set of first reference pictures and the set of second reference pictures based on reference picture selection information to implement a combination of processes for a prescribed prediction and a prescribed second decoding being a decoding with an extension of the standard resolution, to create a sequence of super-resolution pictures decoded with the standard resolution based on the set of decoding targets and the set of selected reference pictures"	2, 11
"selecting one of the set of first reference pictures and the set of second reference pictures based on reference picture selection information to implement a combination of processes for a prescribed prediction and a prescribed second decoding being a decoding with an extension of the standard resolution, based on the	3, 4

Term	Relevant Claim(s)
set of decoding targets and the set of selected reference pictures to create a sequence of super-resolution pictures decoded with the standard resolution"	
"standard resolution"	2, 3, 4, 11
"super-resolution decoded pictures with a standard resolution"	2, 3, 4, 11
"super-resolution enlarged decoded pictures"	2, 3, 4, 11
"super-resolution enlarger"	2, 11
"super-resolution"	2, 3, 4, 11
"resolution"	2, 3, 4, 11
"the sequence of decoded pictures created with the standard resolution at the first decoder as a set of first reference pictures, and the sequence of super-resolution decoded pictures created with the standard resolution at the first resolution converter as a set of second reference pictures"	2, 11
"the standard resolution of the second sequence of encoded bits is the same as the standard resolution of the super-resolution decoded pictures"	4
"wherein the set of decoding targets, the set of first reference pictures, and the set of second reference pictures have the same value in spatial resolution"	2, 3, 4, 11

VII. Subject Matter Eligibility

Pursuant to the court's Standing Order Regarding Subject Matter Eligibility Contentions Applicable to All Patent Infringement Cases Assigned to Chief District Judge Rodney Gilstrap ("Order Regarding Eligibility"), Samsung provides the following Eligibility Contentions.

As described below, in Appendices A-F, and in Exhibits G1 through G6 (collectively "Appendix G"), which are hereby incorporated by reference as if fully set forth herein, Defendants contend that the Asserted Claims of the Asserted Patents are drawn to subject matter that is not patentable under 35 U.S.C. § 101. Pursuant to section (a)(1) of the Order Regarding Eligibility, Appendix G contains a chart for each Asserted Patent identifying each exception to eligibility to which each Challenged Claim is directed and the factual and legal basis therefor. Pursuant to section (a)(2)(A) of the Order Regarding Eligibility the charts of Appendix G, read in conjunction with the discussion herein and in Appendices A-F, and together with the material described,

referenced, or cited in the charts, further provide a description of the indsutry, at the relevant time, in which the Challenged Claims are alleged to be well understood, routine, and conventional, and the factual and legal basis therefor. Further, pursuant to sections (a)(2)(B) and (a)(3) of the Order Regarding Eligibility the charts of Appendix G, read in conjunction with the discussion herein, and together with the material described, referenced, or cited in the charts, further provides: (i) a description of how each element of each Challenged Claim, both individually and in combination with the other elements of that claim, was well understood, routine, and/or conventional in the relevant industry at the relevant time and (ii) an identification of the factual or legal basis for how the Challenged Claims are otherwise ineligible for patent protection.

Additionally, pursuant to section (b) of the Order Regarding Eligibility, Defendants are concurrently producing or making available for inspection and copying the materials on which Defendants presently seek to rely for subject-matter eligibility purposes. These prior art references and other materials are cited herein or in Appendices A-G. For the avoidance of doubt, Defendants may rely on the materials identified in Section III, above. Without concession that expert testimony is necessary to resolve the subject matter eligibility of the Asserted Claims, Defendants reserve the right to further rely on expert testimony to be disclosed in accordance with the Docket Control Order. Defendants' search for prior art references, additional documentation, and/or corroborating evidence concerning prior art systems and devices is ongoing. Accordingly, Defendants reserve the right to supplement their production as Defendants obtain additional prior art references, documentation, and/or corroborating evidence concerning subject matter eligibility during the course of discovery.

Defendants reserve the right to supplement their document production pursuant to section (b) of the Order Regarding Eligibility as authorized by the Patent Local Rules, the Order Regarding

Eligibility, or any other order of the Court.

A. U.S. Patent No. 6,845,128

Each of the Asserted Claims of the '128 Patent is drawn to subject matter that is not patentable under 35 U.S.C. § 101. The '128 Patent Asserted Claims are unpatentable for failure to recite patent eligible subject matter.

The '128 Patent Asserted Claims are directed to abstract ideas and therefore not eligible subject matter under 35 U.S.C. § 101. *E.g.*, *Alice Corp. Pty. Ltd. v. CLS Bank Intern.*, 573 U.S. 208, 216 (2014). By way of example, the Asserted Claims of the '128 Patent are generally directed to the abstract ideas of setting an emphasis level. By way of further example, the asserted claims are directed to the abstract idea of encoding and combining video data. The '128 Patent further explains that emphasis encoding was well known and conventional. For example, the patent provides that "emphasis processing is a known technique widely used in storage and transfer of video and audio signals," and concedes that known video-emphasis encoding techniques were used in "known predictive-encoding processing to produce a variable-length bitstream." '128 Patent, 1:16-50;1:65-2:10. These admissions further show that the Asserted Claims are directed to a mere abstract concept, because the claimed advance over the prior art is the mere concept of applying an "emphasis level" in an encoding apparatus. Thus, under *Alice* Step 1, the '128 Patent Asserted Claims are directed to one or more ineligible concepts.

Under *Alice* Step 2, the '128 Patent does not add an inventive step to the general abstract idea. The use of an "emphasis-level" where "the higher the emphasis level [is used] for less generation of block distortion and mosquito noises" and "the lower the emphasis level for less generation of codes and [] less occurrence of an overrange condition," or providing "emphasis-level control" and transferring data to the video deemphasis decoding apparatus that indicates the

emphasis level is not patent-eligible. *Id.* at 2:27-31, 4:1-9. This purported advance over the prior art is not a technological advancement over the prior art, as the patent admits that emphasis encoding was known in the art. The patent simply uses different nomenclature to refer to the amount of emphasis used, without offering any improvements or technological advancements to the prior art. Further, the Asserted Claims recite purely functional terms that fail to transform the claimed abstract idea beyond the conventional computer tasks. *Bot M8 LLC v. Sony Corp. of Am.*, 465 F. Supp. 3d 1013, 1025 (N.D. Cal. 2020) ("Though given special names, each part remains a generic computer part invoked to effect the conventional computer task of gathering, manipulating, transmitting, and using data.").

Pursuant to section (a)(1) of the Order Regarding Eligibility, Exhibit G-1 contains a chart identifying each exception to eligibility to which each Challenged Claim is directed and the factual and legal basis therefor. For avoidance of doubt, and as set forth above and in Exhibit G-1 each Challenged Claim of the '128 Patent is directed to one or more abstract ideas and therefore is not directed to patent eligible subject matter. Exhibit G-1 also identifies claim 1 as representative of the other Challenged Claims for purposes of the eligibility inquiry. Also, pursuant to section (a)(2)(B) and (a)(3) of the Order regarding Eligibility, Exhibit G-1, read in conjunction with the preceding paragraphs herein provides: (i) a description of how each element of each Challenged Claim, both individually and in combination with the other elements of that claim, was well understood, routine, and/or conventional in the relevant industry at the relevant time and (ii) an identification of the factual or legal basis for how the Challenged Claims are otherwise ineligible for patent protection.

Finally, pursuant to section (a)(2)(A) of the Order Regarding Eligibility, Defendants provide the following description of the relevant industry at the relevant time. As of the alleged

priority date for the ’128 Patent, the relevant industry was well-developed. Video coding in general had been around for nearly a century, and all individual elements disclosed and recited in the ’128 Patent were conventional, routine, and well known in the video coding industry. *See generally* Appendix A. The ’128 Patent further explains that emphasis encoding was well known and conventional. For example, the patent provides that “emphasis processing is a known technique widely used in storage and transfer of video and audio signals,” and concedes that known video-emphasis encoding” techniques were used in “known predictive-encoding processing to produce a variable-length bitstream.” ’128 Patent at 1:16-50; 1:65-2:10. These admissions further show that the Asserted Claims are directed to a mere abstract concept, because the claimed advance over the prior art is the mere concept of applying an “emphasis level” in an encoding apparatus . Indeed, none of these concepts was new or merely on the verge of development as of the alleged priority date of the ’128 Patent. Instead, these concepts had been known for years and were the subject of many published articles and/or patents from around the world. The ’128 Patent contributed nothing beyond what was already conventional, routine, well-known technology as of the relevant time period.

Further detail regarding Defendants’ contentions that the Asserted Claims of the ’128 Patent do not qualify as patent-eligible subject matter are contained in Exhibit G-1.

B. U.S. Patent No. 8,090,025

Each of the Asserted Claims of the ’025 Patent is drawn to subject matter that is not patentable under 35 U.S.C. § 101. Specifically, the Asserted Claims of the ’025 Patent are generally directed to the abstract idea of, for example, encoding, decoding, storing, processing, and selecting data. *RecogniCorp, LLC v. Nintendo Co.*, 855 F.3d 1322, 1327-28 (Fed. Cir. 2017). At a more granular level, the claims recite well-known elements that had been used for many years

in conventional and standardized encoding/decoding technologies, with the purported advance over the prior art being motion compensation that "satisfies Poisson's Equation." This, too, is not patent eligible because the claims are directed to prior art encoding/decoding elements and an instruction to apply a mathematical formula ("Poisson's Equation"). *Parker v. Flook*, 437 U.S. 584, 590-95 (1978); *Affinity Labs of Texas, LLC v. DirecTV, LLC*, 838 F.3d 1253, 1257-58 (Fed. Cir. 2016) ("The 'abstract idea' step of the inquiry calls upon us to look at the 'focus of the claimed advance over the prior art' to determine if the claim's 'character as a whole' is directed to excluded subject matter.") Thus, under *Alice* Step 1, the '025 Patent Asserted Claims are directed to one or more ineligible concepts.

Under *Alice* Step 2, the '025 Patent does not add an inventive step to the general abstract concept of encoding, decoding, storing, processing, and selecting data or to the instruction apply a mathematical formula (Poisson's Equation) to encoding/decoding technology. The '025 Patent employs well-known components (e.g., a "demultiplexer," an "entropy decoder," a "combiner," a "memory," a "selector," and "a decoding controller") and conventional functionality (e.g., "predictive coding," "quantization," using a "reference picture," "inverse-quantization," "inverse-orthogonal transform," etc.) as shown in Defendants' invalidity contentions involving anticipation and/or obviousness. Indeed, these elements were the conventional building blocks for conventional encoding/decoding standards that predate the '025 Patent by many years. For example, the "Background of the Invention" section in the '025 Patent concedes that "MPEG-4 AVC (which will be referred to as AVC or H.264, hereinafter)," as well as motion compensation, discrete cosince transforms, and smoothing features were commonly used in conjunction with known standards. '025 Patent at 1:23-63. As shown in these Contentions, MPEG-4 and AVC were well-known by the early 2000s, and indeed H.261, H.263, MPEG-1, MPEG-2, MEPG-4

Visual and H.264 were all conventional and well-known for years before the earliest possible priority date of the ’025 Patent. Likewise, prior art texts and patents in the field of the invention recognized that conventional “coding standards released since the early 1990s have been based on the same generic design (or model) of a video CODEC that incorporates a motion estimation and compensation front end (sometimes described as DPCM), a transform stage and an entropy encoder.” Iain E. Richardson, H.264 and MPEG-4 Video Compression: Video Coding for Next-generation Multimedia 72 (2004) (“Richardson”). “Any CODEC that is compatible with H.261, H.263, MPEG-1, MPEG-2, MPEG-4 Visual and H.264 [(also known as Advanced Video Coding (AVC) and MPEG-4 Part 10)] has to implement a similar set of basic coding and decoding functions. *Id.* at 72, 87. The prior art is replete with examples showing that conventional encoding/decoding standards used the basic building blocks of the Asserted Claims. For example, Richardson noted that Conventional Video/Moving-Picture Decoders used memory, motion compensation, a combiner, inverse orthogonal transforms, inverse quantizers, and entropy decoders:

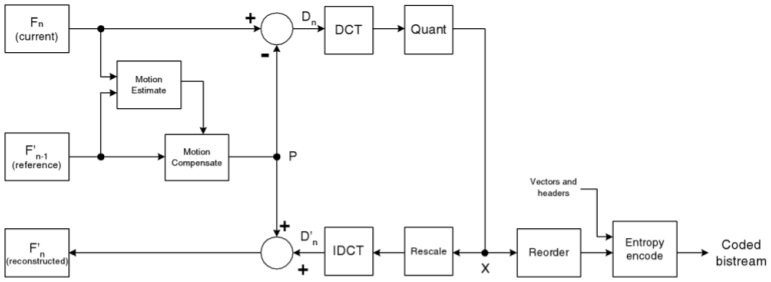

Figure 3.50 DPCM/DCT video encoder

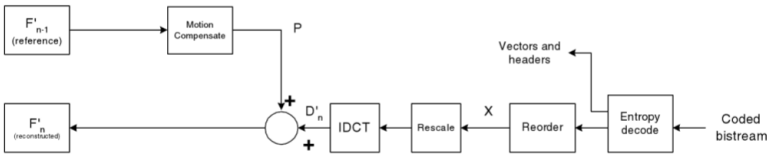

Figure 3.51 DPCM/DCT video decoder

Likewise, Dr. Cliff Reader showed in his “History of MPEG Video Compression” (2002)

that typical MPEG video decoders demultiplexed incoming data and, again, used entropy decoding, inverse quantization, inverse orthogonal transforms, a combiner, motion compensation, and memory (coloring in original):

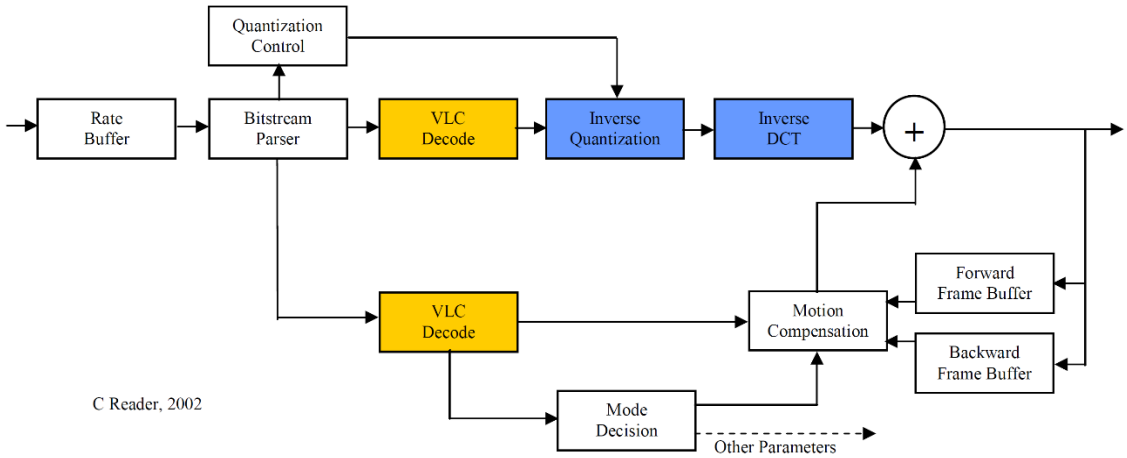

Figure 2b MPEG Video Decoder

As yet another example, the Kim reference (U.S. Patent No. 6,144,700) was filed May 14, 1997 and issued November 7, 2000. Kim noted that even by that early date conventional prior art included the conventional quantization, transform, motion compensation, memory, and combiner elements recited in the Asserted Claims:

FIG.1(PRIOR ART)

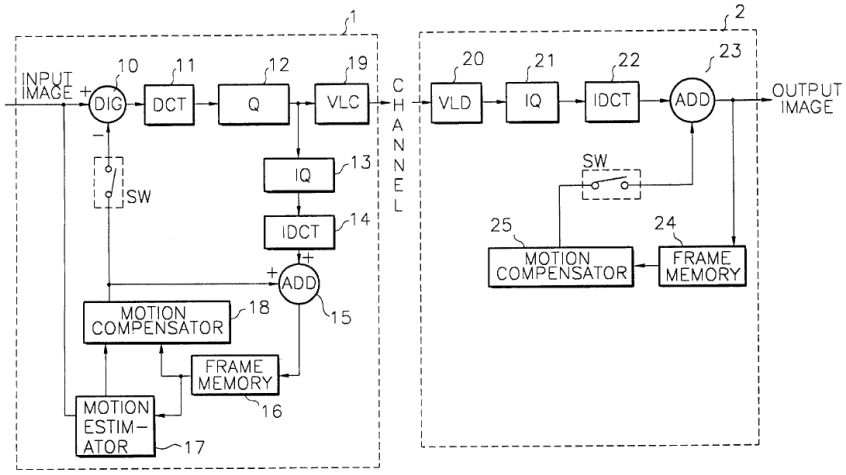

Kim at FIG. 1; *see id.* at 1:37-2:52. And, by 1997, Kim had also disclosed controlling and selecting

the use of motion compensation where appropriate, namely where portions of an encoded/decoded block are on an edge or boundary of the block. *See id.* at 3:28-56, 4:46-67, 7:1-8:17, FIGS. 3-4.

Plaintiff's infringement theory also maps aspects of its claims—particularly those relating to border motion vector data and satisfying Poisson's Equation—to Overlapped Border Motion Compensation (OBMC). But OBMC was also well-understood, routine, and conventional for "[reducing blocking artifacts in motion-compensated prediction." See Markus Flierl and Bernd and Girod, Video coding with superimposed motion-compensated signals: applications to H.264 and beyond 1 (2004). In fact, OBMC was published at least by 1991 by Watanabe and Singhal and was included as an optional mode in H.263, MPEG-4 Visual, and H.264, all of which were standard long before the '025 Patent's priority date. See, e.g., Hiroshi Watanabe & Sharad Singhal, Windowed motion compensation, Proc. SPIE 1605, Visual Commun. and Image Proc., 582-589 (1 November 1991), see also ITU-T Draft Recommendation H.263, Video coding for low bitrate communication, 2 (1996).

The remaining elements of the claims are directed to using the conventional elements described above in such a way "that satisfies Poisson's equation." The use of Poisson's equation—a patent-ineligible equation—cannot supply an inventive step, nor can the conventional elements themselves. *See, e.g., Alice*, 134 S. Ct. at 2359 (holding that limitations describing "'well-understood, routine, conventional activit[ies]' previously known to the industry" were insufficient to supply an inventive concept (quoting *Mayo*, 132 S. Ct. at 1294)). Further detail regarding Defendants' contentions that the Asserted Claims of the '025 Patent do not qualify as patent-eligible subject matter are contained in Exhibit G-2.

Specifically, pursuant to section (a)(1) of the Order Regarding Eligibility, Exhibit G-2 contains a chart identifying each exception to eligibility to which each Challenged Claim is

directed and the factual and legal basis therefor. For avoidance of doubt, and as set forth above and in Exhibit G-2 each Challenged Claim of the ’025 Patent is directed to one or more abstract ideas and/or mathematical formulae and therefore is not directed to patent eligible subject matter. Exhibit G-2 also identifies claim 6 as representative of the other Challenged Claims for purposes of the eligibility inquiry. Also, pursuant to section (a)(2)(B) and (a)(3) of the Order regarding Eligibility, Exhibig G-2, read in conjunction with the preceding paragraphs herein provides: (i) a description of how each element of each Challenged Claim, both individually and in combination with the other elements of that claim, was well understood, routine, and/or conventional in the relevant industry at the relevant time and (ii) an identification of the factual or legal basis for how the Challenged Claims are otherwise ineligible for patent protection.

Finally, pursuant to section (a)(2)(A) of the Order Regarding Eligibility, Defendants provide the following description of the relevant industry at the relevant time. As of the alleged priority date for the ’025 Patent, the relevant industry was well-developed. Video coding in general had been around for nearly a century, predictive interframe video coding had been well-known for decades, digital video algorithms had been implemented for decades and standardized since the 1980s, and all individual elements disclosed and recited in the ’025 Patent were conventional, routine, and well known in the video coding industry. *See generally* Appendix B. By way of example, decoding devices were well-known. *See, e.g.*, Appendix B at 6pre. Video coding systems commonly implemented demultiplexers and used well-known techniques like entropy coding, inverse-quantization, inverse-orthogonal transformation, motion compensation, and block border motion vectors. *See, e.g.*, Appendix B at 6a, 6b, 6c, 6d, 6e, 6h. These systems also commonly incorporated memory and the ability to combine or select between data streams. *See, e.g.*, Appendix B at 6f, 6g, 6i, 6j. Indeed, none of these concepts was new or merely on the

verge of development as of the alleged priority date of the ’025 Patent. Furthermore, the use of Poisson’s equation in video coding was known prior to the alleged invention. *See, e.g.*, Appendix B at 6b, 6e. Instead, these concepts had been known for years and were the subject of many published articles and/or patents from around the world. The ’025 Patent contributed nothing beyond what was already conventional, routine, well-known technology as of the relevant time period.

C. U.S. Patent No. 8,139,150

Each of the Asserted Claims of the ’150 Patent is drawn to subject matter that is not patentable under 35 U.S.C. § 101. The ’150 Patent Asserted Claims are unpatentable for failure to recite patent eligible subject matter.

The ’150 Patent Asserted Claims are directed to abstract ideas and therefore not eligible subject matter under 35 U.S.C. § 101. *E.g.*, *Alice Corp. Pty. Ltd. v. CLS Bank Intern.*, 573 U.S. 208, 216 (2014). Specifically, all asserted claims of the ’150 Patent are directed to the abstract idea of video signal processing—specifically receiving and decoding video streams containing different viewpoints and calculating a delay time—none of which is patent-eligible. *Parker v. Flook*, 437 U.S. 584, 590-95 (1978); *RecogniCorp, LLC v. Nintendo Co.*, 855 F.3d 1322, 1327-28 (Fed. Cir. 2017). Thus, under *Alice* Step 1, the ’150 Patent Asserted Claims are directed to one or more ineligible concepts. Further, limiting the invention to a particular technological environment “do[es] not render an otherwise abstract concept any less abstract.” *Intellectual Ventures I LLC v. Capital One Fin. Corp.*, 850 F.3d 1332, 1340 (Fed Cir. 2017). Every preamble for each of the ’150 Patent Asserted Claims describes “decoding a coded multi-view video signal including coded signals resulting from encoding picture signals corresponding to different viewpoints respectively,” and “wherein at least one among the viewpoints is designated as a base viewpoint,

the base viewpoint corresponding to a picture signal which is encoded without referring to at least one picture signal corresponding to one of the viewpoints except the base viewpoint." '150 Patent at 44:45-52 (Claim 1), 45:9-16 (Claim 2), 45:39-47 (Claim 3), 46:19-26 (Claim 4). To the extent the preambles are limiting, this language recites the abstract ideas of: multi-view video, video signal processing (decoding coded signals resulting from previously encoding signals), and naming conventions (designating a base viewpoint). The preambles claim neither to invent nor to add to these ideas. For example, merely reciting the act of naming a signal "base viewpoint" for use later is tantamount to creating a variable name to refer to later; it is an act best understood as a "basic tool[] of scientific and technological work" and therefore not patent-eligible. *Alice Corp.*, 573 U.S. at 216 (citing *Mayo*, 566 US at 71).

The preambles further require that the coded multi-view signals contain "coded information representing a desired delay time of the start of decoding a coded signal originating from each of the picture signals corresponding to the viewpoints except the base viewpoint relative to the start of decoding a coded signal originating from the picture signal corresponding to the base viewpoint," or that delay times may be decoded from "view dependencies representing which of the picture signals are referred to as reference signals for the encoding of each of the picture signals." '150 Patent at Claims 1, 2, 3 4. To the extent the preambles are limiting, these recite the abstract idea of waiting some amount of time between finishing decoding one signal and beginning decoding the next. There is nothing inventive about adding the act of deliberately waiting to complete one set of instructions before turning to the next set in the context of video signal processing. Similarly, nothing contained in these preambles, to the extent the preambles are limiting, are patent-eligible.

Finally, each of the claims in the '150 Patent requires the following steps: 1) decoding or

computing one or more "desired delay times"; 2) "decoding the coded signal originating from the picture signal corresponding to the base viewpoint"; "decoding the coded signals originating from the picture signals corresponding to the viewpoints except the base viewpoint"; and delaying the decoding of the coded signals originating from the picture signals corresponding to the viewpoints except the base viewpoint relative to the decoding of the coded signal originating from the picture signal corresponding to the base viewpoint by time intervals equal to the [recovered/computed] desired delay times. '150 Patent at Claims 1, 2, 3 4.[44] These further recite the abstract ideas of video signal processing and waiting for an amount of time before completing the next task, add nothing inventive to these concepts, and therefore are further patent-ineligible.

Although the '150 Patent purports to claim the above limitations in the context of an apparatus, two methods, and a non-transitory computer program, the claims themselves make clear the inventors consider their invention not the particular embodiment it takes, but rather the steps they implement. The beginnings of the claims are always drafted in the form of "a [noun] [for/of] decoding…" and proceeds to recite nearly identical steps of acquiring desired delay times, decoding base viewpoints, decoding non-base viewpoints, and delaying the decoding of the non-base viewpoints relative to the decoding the base viewpoint relative to the acquired delay times. *Id.* There is little variation in the language of the claims because they all describe the same abstract idea: decoding multi-view signals, naming signals with certain qualities "base view," and waiting for an amount of time between decoding those base views and non-base views. In other words,

[44] Claim 4 also includes "view dependencies," but these are ultimately used to recover the delay times; it is an extra step to accomplish the same result. *See id.* at 46:33-39 ("computing a desired delay time of the start of decoding a coded signal originating from each of the picture signals corresponding to the viewpoints except the base viewpoint relative to the start of decoding a coded signal originating from the picture signal corresponding to the base viewpoint *in response to the recovered view dependencies*." (emphasis added)).

the ’150 Patent claims abstract ideas in the form of video signal processing and the mental processes/algorithms necessary to complete them without adding anything inventive.

The text of *Alice* describes the ’150 Patent Asserted claims best: The apparatus and computer program claims “are no different from the method claims in substance. The method claims recite the abstract idea implemented on a generic computer; the [other] claims recite a handful of generic computer components configured to implement the same idea.” *Alice*, 573 U.S. at 226. That is exactly the case with ’150 Patent: 4 claims reciting one abstract idea. All are ineligible under 35 U.S.C. § 101.

Pursuant to section (a)(1) of the Order Regarding Eligibility, Exhibit G-3 contains a chart identifying each exception to eligibility to which each Challenged Claim is directed and the factual and legal basis therefor. For avoidance of doubt, and as set forth above and in Exhibit G-3 each Challenged Claim of the ’150 Patent is directed to one or more abstract ideas and/or mathematical formulae and therefore is not directed to patent eligible subject matter. Exhibit G-3 also identifies claim 1 as representative of the other Challenged Claims for purposes of the eligibility inquiry. Also, pursuant to section (a)(2)(B) and (a)(3) of the Order regarding Eligibility, Exhibit G-3, read in conjunction with the preceding paragraphs herein provides: (i) a description of how each element of each Challenged Claim, both individually and in combination with the other elements of that claim, was well understood, routine, and/or conventional in the relevant industry at the relevant time and (ii) an identification of the factual or legal basis for how the Challenged Claims are otherwise ineligible for patent protection.

Finally, pursuant to section (a)(2)(A) of the Order Regarding Eligibility, Defendants provide the following description of the relevant industry at the relevant time. As of the alleged priority date for the ’150 Patent, the relevant industry was well-developed. Video coding in

general had been around for nearly a century, predictive interframe video coding had been well-known for decades, digital video algorithms had been implemented for decades and standardized since the 1980s, Multiview coding and decoding dates to the 1980s, and all individual elements disclosed and recited in the '150 Patent were conventional, routine, and well known in the video coding industry. *See generally* Appendix C. By way of example, decoding devices were well-known. *See, e.g.*, Appendix C at 1pre. Video coding systems commonly implemented multi-view decoders and used well-known techniques to calculate delay times. *See, e.g.*, Appendix C at 1[a]-1[d]. These systems also commonly incorporated means to decode streams with different viewpoints, including base viewpoints. *See, e.g.*, *id.* Indeed, none of these concepts was new or merely on the verge of development as of the alleged priority date of the '150 Patent. Instead, these concepts had been known for years and were the subject of many published articles and/or patents from around the world. The '150 Patent contributed nothing beyond what was already conventional, routine, well-known technology as of the relevant time period.

Further detail regarding Defendants' contentions that the Asserted Claims of the '150 Patent do not qualify as patent-eligible subject matter are contained in Exhibit G-3.

D. U.S. Patent No. 9,445,041

Each of the Asserted Claims of the '041 Patent is drawn to subject matter that is not patentable under 35 U.S.C. § 101. The '041 Patent Asserted Claims are unpatentable for failure to recite patent eligible subject matter.

The '041 Patent Asserted Claims are directed to abstract ideas and therefore not eligible subject matter under 35 U.S.C. § 101. *E.g.*, *Alice Corp. Pty. Ltd. v. CLS Bank Intern.*, 573 U.S. 208, 216 (2014). Specifically, the '041 Patent is directed to the abstract idea of synchronizing data. The '041 Patent states that in the prior art, "when a plurality of imaging data with different

frame rates [were] to be sequentially or continuously played back" and the user wanted to set the value of the frame rates and playback speeds, "there [could] be a problem that user need[ed] to set a frame rate at the time of image capture considering into the playback speed." *See* '041 Patent at 3:1–12. The patent further explained that the user "must consider and set the three kinds of frame rates, the recording frame rate, the playback framerate, and the valid frame rate," which would be "troublesome for the user" and "may give a load to the imaging apparatus." *Id.*

The main purported advance of the '041 Patent over the prior art is to address the aforementioned problem by taking as input two videos, changing the frame rates of the two videos, and displaying them at a common frame rate. *See, e.g.*, '041 Patent at 3:14–67. In fact, the purported advance is not an advance at all, but merely a statement of the problem to be solved, where the problem is how to combine two videos having different frame rates and displaying them using a common frame rate. But the patent does not purport to have invented or improved the functions of inputting videos, changing frame rates, or outputting videos. Further, the Asserted Claims recite purely functional terms that fail to transform the claimed abstract idea beyond the conventional computer tasks. *Bot M8 LLC v. Sony Corp. of Am.*, 465 F. Supp. 3d 1013, 1025 (N.D. Cal. 2020) ("Though given special names, each part remains a generic computer part invoked to effect the conventional computer task of gathering, manipulating, transmitting, and using data.").

Pursuant to section (a)(1) of the Order Regarding Eligibility, Exhibit G-4 contains a chart identifying each exception to eligibility to which each Challenged Claim is directed and the factual and legal basis therefor. For avoidance of doubt, and as set forth above and in Exhibit G-4 each Challenged Claim of the '041 Patent is directed to one or more abstract ideas and therefore is not directed to patent eligible subject matter. Exhibit G-4 also identifies claim 1 as representative of the other Challenged Claims for purposes of the eligibility inquiry. Also, pursuant to section

(a)(2)(B) and (a)(3) of the Order regarding Eligibility, Exhibit G-4, read in conjunction with the preceding paragraphs herein provides: (i) a description of how each element of each Challenged Claim, both individually and in combination with the other elements of that claim, was well understood, routine, and/or conventional in the relevant industry at the relevant time and (ii) an identification of the factual or legal basis for how the Challenged Claims are otherwise ineligible for patent protection.

Finally, pursuant to section (a)(2)(A) of the Order Regarding Eligibility, Defendants provide the following description of the relevant industry at the relevant time. As of the alleged priority date for the '041 Patent, the relevant industry was well-developed. Video coding in general had been around for nearly a century, and all individual elements disclosed and recited in the '041 Patent were conventional, routine, and well known in the video coding industry. *See generally* Appendix D. The '041 Patent states that in the prior art, "when a plurality of imaging data with different frame rates [were] to be sequentially or continuously played back" and the user wanted to set the value of the frame rates and playback speeds, "there [could] be a problem that user need[ed] to set a frame rate at the time of image capture considering into the playback speed." *See* '041 Patent at 3:1–12. The patent further explained that the user "must consider and set the three kinds of frame rates, the recording frame rate, the playback framerate, and the valid frame rate," which would be "troublesome for the user" and "may give a load to the imaging apparatus." *Id.* The main purported advance of the '041 Patent over the prior art is to address the aforementioned problem by taking as input two videos, changing the frame rates of the two videos, and displaying them at a common frame rate. *See, e.g.*, '041 Patent at 3:14–67. In fact, the purported advance is not an advance at all, but merely a statement of the problem to be solved, where the problem is how to combine two videos having different frame rates and displaying them using a common frame rate. But the patent does not purport to have invented or improved the functions of inputting videos, changing

frame rates, or outputting videos. Further, the Asserted Claims recite purely functional terms that fail to transform the claimed abstract idea beyond the conventional computer tasks. *Bot M8 LLC v. Sony Corp. of Am.*, 465 F. Supp. 3d 1013, 1025 (N.D. Cal. 2020) ("Though given special names, each part remains a generic computer part invoked to effect the conventional computer task of gathering, manipulating, transmitting, and using data."). Indeed, none of these concepts was new or merely on the verge of development as of the alleged priority date of the '041 Patent. Instead, these concepts had been known for years and were the subject of many published articles and/or patents from around the world. The '041 Patent contributed nothing beyond what was already conventional, routine, well-known technology as of the relevant time period.

Further detail regarding Defendants' contentions that the Asserted Claims of the '041 Patent do not qualify as patent-eligible subject matter are contained in Exhibit G-4.

E. U.S. Patent No. 9,986,303

Each of the Asserted Claims of the '303 Patent is drawn to subject matter that is not patentable under 35 U.S.C. § 101. The '303 Patent Asserted Claim is unpatentable for failure to recite patent eligible subject matter.

The '303 Patent Asserted Claim is directed to abstract ideas and therefore not eligible subject matter under 35 U.S.C. § 101. *E.g.*, *Alice Corp. Pty. Ltd. v. CLS Bank Intern.*, 573 U.S. 208, 216 (2014). Specifically, the asserted claim of the '150 Patent is directed to the abstract idea of video signal processing—specifically receiving and decoding video streams using both basic and supplemental video image data —none of which is patent-eligible. *Parker v. Flook*, 437 U.S. 584, 590-95 (1978); *RecogniCorp, LLC v. Nintendo Co.*, 855 F.3d 1322, 1327-28 (Fed. Cir. 2017). The preamble to claim 1 of the '303 Patent, the only Asserted Claim, recites "a video image coding data receiver comprising: a processor; and a memory unit having instructions stored which, when executed by the processor, cause the processor to perform operations." To the extent the preamble

is limiting, this is wholly drawn to the abstract idea of receiving video image coding data "that merely require[es] generic computer implementation" and "fails to transform that abstract idea into a patent-eligible invention." *Alice*, 573 U.S. at 212.

The operations to be performed by the claimed generic processor comprises five steps: "[1] receiving basic video image coding data; [2] decoding the received basic video image coding data so as to reproduce a video image; [3] receiving supplementary video image coding data including a supplementary hierarchical picture whose coding order and display order are earlier by a factor of a group of pictures including an intra coded picture and a plurality of inter prediction coded pictures than those of a basic hierarchical picture included in the basic video image coding data, a basic hierarchy and a supplementary hierarchy being set in units of the group of pictures; [4] acquiring basic video image coding data received before supplementary video image coding data that has been received at the moment; and [5] reconstructing video image coding data from the basic video image coding data and the supplementary video image coding data." Steps [1], [2], and [4] recite basic abstract ideas of signal processing: receiving and decoding signals and waiting for a particular time or event before doing so. Step [4] further recites receiving and decoding videos with extra gloss, adding the known algorithms of inter- and intra-prediction picture coding. Step [5] recites the abstract idea of low and high quality video displays. However, there is nothing *inventive* added when reciting these abstract ideas in the context of a processor and a memory unit: "In short, each step does no more than require a generic computer to perform generic computer functions." *Alice*, 573 U.S. at 225.

At their core, each of these limitations recite an abstract idea—such as receiving data—or an algorithm—such as inter-prediction coding. The operations described by claim 1 add nothing inventive to the concepts disclosed, and adding the use of a processor or memory unit does not

save the claim. *Alice*, 573 U.S. at 223 ("[T]he mere recitation of a generic computer cannot transform a patent-ineligible abstract idea into a patent-eligible invention."). The Asserted Claim of the '303 Patent is patent-ineligible.

Pursuant to section (a)(1) of the Order Regarding Eligibility, Exhibit G-5 contains a chart identifying each exception to eligibility to which each Challenged Claim is directed and the factual and legal basis therefor. For avoidance of doubt, and as set forth above and in Exhibit G-5 each Challenged Claim of the '303 Patent is directed to one or more abstract ideas and/or mathematical formulae and therefore is not directed to patent eligible subject matter. Exhibit G-5 also identifies claim 1 as representative of the 303 patent claims for purposes of the eligibility inquiry. Also, pursuant to section (a)(2)(B) and (a)(3) of the Order regarding Eligibility, Exhibit G-5, read in conjunction with the preceding paragraphs herein provides: (i) a description of how each element of each Challenged Claim, both individually and in combination with the other elements of that claim, was well understood, routine, and/or conventional in the relevant industry at the relevant time and (ii) an identification of the factual or legal basis for how the Challenged Claims are otherwise ineligible for patent protection.

Finally, pursuant to section (a)(2)(A) of the Order Regarding Eligibility, Defendants provide the following description of the relevant industry at the relevant time. As of the alleged priority date for the '303 Patent, the relevant industry was well-developed. Video coding in general had been around for nearly a century, predictive interframe video coding had been well-known for decades, digital video algorithms had been implemented for decades and standardized since the 1980s, receiving, decoding, and reconstructing streams using both basic and supplemental video image data dated to at least the 1980s, and all individual elements disclosed and recited in the '303 Patent were conventional, routine, and well known in the video coding

industry. *See generally* Appendix E. By way of example, decoding devices were well-known. *See, e.g.*, Appendix E at 1pre. Video coding systems commonly implemented processors and used well-known techniques to decode and reconstruct video streams. *See, e.g.*, Appendix E at 1[a]-1[f]. These systems also commonly incorporated memory and the ability to reconstruct the video streams using supplemental and basic video image data. *See, e.g.*, *id*. Indeed, none of these concepts was new or merely on the verge of development as of the alleged priority date of the '303 Patent. Instead, these concepts had been known for years and were the subject of many published articles and/or patents from around the world. The '303 Patent contributed nothing beyond what was already conventional, routine, well-known technology as of the relevant time period.

Further detail regarding Defendants' contentions that the Asserted Claim of the '303 Patent do not qualify as patent-eligible subject matter are contained in Exhibit G-5.

F. U.S. Patent No. 10,218,995

Each of the Asserted Claims of the '995 Patent is drawn to subject matter that is not patentable under 35 U.S.C. § 101. Specifically, all claims of the '995 Patent are fatally abstract under the U.S. Supreme Court's decision in *Alice Corp. v. CLS Bank Int'l*, 134 S. Ct. 2345 (2014) and progeny. The abstract ideas presented in the claims are generally directed to creating different representations of images and choosing between them. Under *Alice* Step 1, those ideas are abstract, as they relate to a fundamental long prevalent practice of improving image quality. *See Digitech Image Techs.*, *LLC v. Elecs. For Imaging, Inc.*, 758 F.3d 1344, 1351 (Fed. Cir. 2014). Further, limiting the invention to a particular technological environment "do[es] not render an otherwise abstract concept any less abstract." *Intellectual Ventures I LLC v. Capital One Fin. Corp.*, 850 F.3d 1332, 1340 (Fed Cir. 2017). Under *Alice* Step 2, the '995 Patent does not contain any inventive concept. The '995 Patent employs well-known components and conventional

functionality (*e.g.*, a "demultiplexer," one or more "decoder[s]", a "resolution-enlarger," and one or more "resolution converter[s]") as shown in Defendants' invalidity contentions involving anticipation and/or obviousness. Further detail regarding Defendants' contentions that the Asserted Claims of the '995 Patent do not qualify as patent-eligible subject matter are contained in Exhibit G-6.

Specifically, pursuant to section (a)(1) of the Order Regarding Eligibility, Exhibit G-6 contains a chart identifying each exception to eligibility to which each Challenged Claim is directed and the factual and legal basis therefor. For avoidance of doubt, and as set forth above and in Exhibit G-6 each Challenged Claim of the '995 Patent is directed to one or more abstract ideas and/or mathematical formulae and therefore is not directed to patent eligible subject matter. Exhibit G-6 also identifies claim 3 as representative of the other Challenged Claims for purposes of the eligibility inquiry. Also, pursuant to section (a)(2)(B) and (a)(3) of the Order regarding Eligibility, Exhibig G-6, read in conjunction with the preceding paragraphs herein provides: (i) a description of how each element of each Challenged Claim, both individually and in combination with the other elements of that claim, was well understood, routine, and/or conventional in the relevant industry at the relevant time and (ii) an identification of the factual or legal basis for how the Challenged Claims are otherwise ineligible for patent protection.

Finally, pursuant to section (a)(2)(A) of the Order Regarding Eligibility, Defendants provide the following description of the relevant industry at the relevant time. As of the alleged priority date for the '995 Patent, the relevant industry was well-developed. Video coding in general had been around for nearly a century, resolution conversion had been well-known for decades, digital video algorithms had been implemented for decades and standardized since the 1980s, and all individual elements disclosed and recited in the '995 Patent were conventional,

routine, and well known in the video coding industry. *See generally* Appendix F. By way of example, decoding systems were well-known. *See*, *e.g.*, Appendix F at 2pre. Video coding systems commonly implemented demultiplexers and used well-known techniques like resolution conversion and enlargement. *See*, *e.g.*, Appendix F at 2b-2f. These systems also commonly incorporated memory and the ability to combine or select between data streams. *See*, *e.g.*, Appendix F at 2f-2h. Indeed, none of these concepts was new or merely on the verge of development as of the alleged priority date of the '995 Patent. Instead, these concepts had been known for years and were the subject of many published articles and/or patents from around the world. The '995 Patent contributed nothing beyond what was already conventional, routine, well-known technology as of the relevant time period.

VIII. Priority Dates

A. U.S. Patent No. 6,845,128

In its Infringement Contentions, ACT argues that the asserted claims of the '128 Patent are entitled to a priority date of at least the filing date of its earliest foreign application, Japan Patent Application Nos. 2001-0033401 and 2001-033403, which was filed February 9, 2001.

Defendants do not agree, and therefore dispute, that the '128 Patent asserted claims are entitled to the priority date asserted by ACT. For example, the Japan Patent Application Nos. 2001-033403 and 2001-033401 does not include written description of the alleged invention sufficient to enable any person skilled in the art to make a video-emphasis encoding apparatus comprising "an emphasis-level setter for setting an emphasis level to the input video signal in accordance with at least one factor among control data carried by the input video signal, a picture state detected from the input video signal and encoding conditions for the input video signal;", "an emphasizer for applying the emphasis processing to the input video signal at the emphasis level to

obtain an emphasized video signal;", "an encoder for encoding the emphasized video signal to obtain a video bitstream; and", and "a multiplexer for multiplexing the video bitstream and data on the emphasis level." as set forth at claim 1 of the '128 Patent. These limitations are simply not present, and ACT has not identified any bases for these limitations being found in the earlier application. Further, ACT failed to produce the Japan Patent Application Nos. 2001-0033401 and 2001-033403 to which it claims priority.

The '128 Patent is therefore not entitled to the claimed priority date of February 9, 2001. The correct and legally-applicable priority date of the '128 Patent is instead its filing date, February 8, 2002.

B. U.S. Patent No. 8,090,025

In its Infringement Contentions, ACT argues that the asserted claims of the '025 Patent are entitled to a priority date of at least the filing date of its earliest foreign application, Japan Patent Application No. 2006-112995, which was filed April 17, 2006.

Defendants do not agree, and therefore dispute, that the '025 Patent asserted claims are entitled to the priority date asserted by ACT. For example, the Japan Patent Application Nos. 2006-112995 and 2007-093162 do not include written description of the alleged invention sufficient to enable any person skilled in the art to make a moving-picture decoding apparatus comprising, e.g.: "a combiner to combine the first predictive picture and the decoded residual picture to generate a decoded moving picture signal," "a decoding controller to receive decoding control data for decoding control from the parameter data and control the selector to switch the predictive picture to be supplied to the combiner between the first and second predictive pictures according to the decoding control data," "a memory to store the decoded moving-picture signal for at least one picture as a reference picture," "a motion compensator to specify a corresponding

rectangular zone in the reference picture based on the motion-vector data, thus generating a second predictive picture," "a plurality of rectangular zones, each composed of a specific number of pixels, into which a video area of the moving-picture video signal is divided," and "a selector to select either the first predictive picture or the second predictive picture and supply the predictive picture thus selected to the combiner," as set forth in at least claim 6 of the '025 Patent. These limitations are simply not present, and ACT has not identified any bases for these limitations being found in the earlier application. Further, ACT failed to produce the Japan Patent Application Nos. 2006-112995 and 2007-093162 to which it claims priority.

The '025 Patent is therefore not entitled to the claimed priority date of April 17, 2006. The correct and legally-applicable priority date of the '025 Patent is instead its filing date, April 17, 2007.

C. U.S. Patent No. 8,139,150

In its Infringement Contentions, ACT argues that the asserted claims of the '150 Patent are entitled to a priority date of at least the filing date of its earliest foreign application, Japan Patent Application No. 2006-279364, which was filed March 31, 2014.

Defendants do not agree, and therefore dispute, that the '150 Patent asserted claims are entitled to the priority date asserted by ACT. For example, the Japan Patent Application No. 2006-279364 does not include written description of the alleged invention sufficient to enable any person skilled in the art to make a video image coding data receiver comprising "and wherein the coded multi-view video signal contains coded information representing a desired delay time of the start of decoding a coded signal originating from each of the picture signals corresponding to the viewpoints except the base viewpoint relative to the start of decoding a coded signal originating from the picture signal corresponding to the base viewpoint, the apparatus comprising", "first

means for decoding the coded information in the coded multi-view video signal to recover the desired delay times for the coded signals originating from the picture signals corresponding to the viewpoints except the base viewpoint", "third means for decoding the coded signals originating from the picture signals corresponding to the viewpoints except the base viewpoint; and", and "fourth means for delaying the decoding of the coded signals by the third means relative to the decoding of the coded signal by the second means by time intervals equal to the desired delay times recovered by the first means" as set forth at claim 1 of the '150 Patent. Asserted Claims 2-4 of the '150 Patent recite similar limitations that also lack written description support. *See* '150 Patent at claims 2-4. These limitations are simply not present, and ACT has not identified any bases for these limitations being found in the earlier application. Further, ACT failed to produce the Japan Patent Application No. 2006-279364 to which it claims priority.

The '150 Patent is therefore not entitled to the claimed priority date of October 13, 2006. The correct and legally-applicable priority date of the '150 Patent is instead its filing date, October 10, 2007.

D. U.S. Patent No. 9,986,303

In its Infringement Contentions, ACT asserts the the asserted claims of the '303 Patent are entitled to a priority date of at least the filing date of its earliest foreign application, Japan Patent Application No. 2014-071975, which was filed March 31, 2014.

Defendants do not agree, and therefore dispute, that the '303 Patent asserted claims are entitled to the priority date asserted by ACT. The Japan Patent Application No. 2014-071975 does not include written description of the alleged invention sufficient to enable any person skilled in the art to make a video image coding data receiver comprising "receiving supplementary video image coding data including a supplementary hierarchical picture whose coding order and display

order are earlier by a factor of a group of pictures including an intra coded picture and a plurality of inter prediction coded pictures than those of a basic hierarchical picture included in the basic video image coding data, a basic hierarchy and a supplementary hierarchy being set in units of the group of pictures", "acquiring basic video image coding data received before supplementary video image coding data that has been received at the moment; and", "reconstructing video image coding data from the basic video image coding data and the supplementary video image coding data," as set forth at claim 1 of the '303 Patent. These limitations are simply not present and ACT has not identified any bases for these limitations being found in the earlier application. Further, ACT failed to produce the Japan Patent Application No. 2014-071975 to which it claims priority.

The '303 Patent is therefore not entitled to the claimed priority date of March 31, 2014. The correct and legally-applicable priority date of the '303 Patent is instead its filing date, March 13, 2015.

E. U.S. Patent No. 9,445,041

In its Infringement Contentions, ACT argues that the asserted claims of the '041 Patent are entitled to a priority date of at least the filing date of its earliest foreign application, Japan Patent Application No. 2012-288402, which was filed December 28, 2012.

Defendants do not agree, and therefore dispute, that the '041 Patent asserted claims are entitled to the priority date asserted by ACT. For example, the Japan Patent Application No. 2012-288402 does not include written description of the alleged invention sufficient to enable any person skilled in the art to make a moving image data processing apparatus comprising "a moving image data input unit configured to be input of first moving image data generated at a first frame rate and second image data generated at a second frame rate that is different from the first frame rate;", "an input frame rate specification unit configured to specify the first frame rate of the first moving

image data and the second frame rate of the second moving image data;", "the first and second moving image data having been input into the moving image data input unit;" "an output frame rate specification unit configured to specify output frame rate of the first moving image data and output frame rate of the second moving image data that have been input into the moving image data input unit;" "a playback speed specification unit configured to specify a same playback speed for the first moving image data and the second moving image data;" "a frame rate conversion unit configured to change a frame rate of the first moving image data based on the first frame rate, the output frame rate, and the playback speed, and change a frame rate of the second moving image data based on the second frame rate, the output frame rate, and the playback speed; and", and "a moving image data output unit that outputs the first and second moving image data whose frame rates have been converted by the frame rate conversion unit." as set forth at claim 1 of the '041 Patent. ACT has not identified any bases for these limitations being found in the earlier application. Further, ACT failed to produce the Japan Patent Application No. 2012-288402 to which it claims priority.

The '041 Patent is therefore not entitled to the claimed priority date of December 28, 2012. The correct and legally-applicable priority date of the '041 Patent is instead its filing date, December 26, 2012.

F. U.S. Patent No. 10,218,995

In its Infringement Contentions, ACT argues that the asserted claims of the '995 Patent are entitled to a priority date of at least the filing date of its earliest foreign application, Japan Patent Application No. P2008-142433, which was filed May 30, 2008.

Defendants do not agree, and therefore dispute, that the '995 Patent asserted claims are entitled to the priority date asserted by ACT. For example, the Japan Patent Application Nos.

P2009-123960 and P2008-142433 do not include written description of the alleged invention sufficient to enable any person skilled in the art to make a moving-picture decoding system comprising, e.g: "a demultiplexer configured to work on a sequence of input encoded bits to implement a process for a prescribed demultiplexing to output at least a first and a second sequence of encoded bits," "a demultiplexer configured to work on a sequence of input encoded bits to implement a process for a prescribed demultiplexing to output at least a first and a second sequence of encoded bits," and "a high resolution as a second resolution higher than the standard resolution" as set forth in at least claim 2 of the '995 Patent. These limitations are simply not present, and ACT has not identified any bases for these limitations being found in the earlier application. Further, ACT failed to produce the Japan Patent Application Nos. P2009-123960 and P2008-142433 to which it claims priority.

The '995 Patent is therefore not entitled to the claimed priority date of May 30, 2008. The correct and legally-applicable priority date of the '995 Patent is instead its filing date, April 21, 2015.

IX. P. R. 3-4 – Productions

Pursuant to P.R. 3-4(a), each Defendant has produced and/or made available for inspection documents and other materials sufficient to show the operation of any aspects or elements of the Accused Products identified by Plaintiff in its P.R. 3-1(c) charts.

Additionally, and pursuant to P.R. 3-4(b), Defendants are concurrently producing a copy of each item of prior art identified herein, except to the extent that such prior art had already been produced or made available in connection with Defendants initial Invalidity Contentions. These prior art references and corroborating evidence are cited in attached invalidity claim charts in Appendices A-F. Defendants will also make available for inspection any prior art systems or

devices upon request to the extent Defendants acquire such systems or devices. References that were cited during prosecution of the Asserted Patents may not be contained in Defendants' production as they are not required to be under the local patent rules. Defendants' search for prior art references, additional documentation, and/or corroborating evidence concerning prior art systems and devices is ongoing. Accordingly, Defendants reserve the right to supplement their production as Defendants obtain additional prior art references, documentation, and/or corroborating evidence concerning invalidity during the course of discovery.

Defendants reserve the right to supplement their P. R. 3-4 document production pursuant to the Patent Local Rules and the orders of the Court.

Date: February 21, 2024

/s/ Daniel A. Tishman

Ruffin B. Cordell
TX Bar No. 04820550
cordell@fr.com
Michael J. McKeon
DC Bar No. 459780
mckeon@fr.com
Ralph A. Philips
DC Bar No. 475571
rphilips@fr.com
Daniel A. Tishman
DC Bar No. 1013923
tishman@fr.com
FISH & RICHARDSON P.C.
1000 Maine Avenue, S.W., Suite 1000
Washington, DC 20024
Telephone: 202-783-5070
Facsimile: 202-783-2331

Noah C. Graubart
GA Bar No. 141862
graubart@fr.com
Lawrence R. Jarvis

Date: February 21, 2024

/s/ Stephen M. Ullmer

Melissa R. Smith
TX Bar No. 24001351
melissa@gillamsmithlaw.com
GILLAM & SMITH, LLP
303 South Washington Ave.
Marshall, Texas 75670
Telephone: (903) 934-8450
Facsimile: (903) 934-9257

Richard A. Edlin
Thomas D. Pease
Rose Cordero Prey
Vimal Kapadia
Jonathan Presvelis
Danielle Zapata Mills
GREENBERG TRAURIG, LLP
One Vanderbilt Avenue
New York, NY 10017
Telephone: (212) 801-9200
Facsimile: (212) 801-6400
Email: edlinr@gtlaw.com
Email: Thomas.Pease@gtlaw.com

GA Bar No. 102116
jarvis@fr.com
FISH & RICHARDSON P.C.
1180 Peachtree St NE
Atlanta, GA 30309
Telephone: 404-892-5005
Facsimile: 404-892-5002

Melissa Richards Smith
melissa@gillamsmith.com
GILLAM & SMITH, LLP
303 South Washington Ave.
Marshall, Texas 75670
Telephone: 903-934-8450
Facsimile: 903-934-9257

Attorneys for Defendants Samsung Electronics Co., Ltd.; and Samsung Electronics America, Inc.

Email: preyr@gtlaw.com
Email: kapadiav@gtlaw.com
Email: presvelisj@gtlaw.com
Email: zapatad@gtlaw.com

Stephen M. Ullmer
GREENBERG TRAURIG, LLP
1144 15th Street, Suite 3300
Denver, CO 80202
Telephone: (303) 572-6579
Facsimile: (303) 572-6500
Email: ullmers@gtlaw.com

Jared Lee
GREENBERG TRAURIG, LLP
222 South Main St., Suite 1730
Salt Lake City, UT 84101
Telephone: (801) 478-6900
Facsimile: (801) 994-9041
Email: jared.lee@gtlaw.com

Attorneys for Defendants LG Electronics Inc. and LG Electronics U.S.A., Inc.

CERTIFICATE OF SERVICE

I certify that on February 21, 2024, a true and correct copy of the foregoing was served on counsel of record for Plaintiff via electronic mail.

/s/ Danielle Zapata Mills
Danielle Zapata Mills