US007814332B2

(12) **United States Patent**
Beenau et al.

(10) **Patent No.: US 7,814,332 B2**
(45) **Date of Patent: Oct. 12, 2010**

(54) **VOICEPRINT BIOMETRICS ON A PAYMENT DEVICE**

(76) Inventors: **Blayn W Beenau**, 15306 N. 89th Ave., Peoria, AZ (US) 85381; **David S Bonalle**, 77 Rose Hill Ave., New Rochelle, NY (US) 10804; **Seth W Fields**, 2982 W. 4745 South, Taylorsville, UT (US) 84118; **William J Gray**, 10835 S. 900 East, Salt Lake City, UT (US) 84105; **Carl Larkin**, Vine Cottage Yapron Road, Bamham, Bognore Regis, West Sussex (GB) P022 0AY; **Joshua L Montgomery**, 1656 N. 980 West, Orem, UT (US) 84057; **Peter D Saunders**, 3710 E. Palisade Dr., Salt Lake City, UT (US) 84109

(*) Notice: Subject to any disclaimer, the term of this patent is extended or adjusted under 35 U.S.C. 154(b) by 576 days.

(21) Appl. No.: **11/850,834**

(22) Filed: **Sep. 6, 2007**

(65) **Prior Publication Data**

US 2010/0030693 A1 Feb. 4, 2010

Related U.S. Application Data

(60) Division of application No. 10/708,831, filed on Mar. 26, 2004, now abandoned, which is a continuation-in-part of application No. 10/340,352, filed on Jan. 10, 2003, which is a continuation-in-part of application No. 10/192,488, filed on Jul. 9, 2002, now Pat. No. 7,239,226, said application No. 10/340,352 is a continuation-in-part of application No. 10/318,432, filed on Dec. 13, 2002, said application No. 10/340,352 is a continuation-in-part of application No. 10/318,480, filed on Dec. 13, 2002, now Pat. No. 7,249,112.

(60) Provisional application No. 60/396,577, filed on Jul. 16, 2002, provisional application No. 60/304,216, filed on Jul. 10, 2001, provisional application No. 60/396,577, filed on Jul. 16, 2002.

(51) **Int. Cl.**
H04L 9/00 (2006.01)
G06F 7/04 (2006.01)
G06F 11/00 (2006.01)

(52) **U.S. Cl.** **713/186**; 713/185; 713/169; 713/170; 713/171; 713/172; 726/27; 726/28; 726/29; 726/30; 380/227; 380/228; 380/229; 380/230

(58) **Field of Classification Search** 713/186
See application file for complete search history.

(56) **References Cited**

U.S. PATENT DOCUMENTS

3,376,661 A 4/1968 Hulett

(Continued)

FOREIGN PATENT DOCUMENTS

CH 689070 8/1997

(Continued)

OTHER PUBLICATIONS

"What's New: Timex Watch Features Speedpass System", http://www.speedpass.com/news/article.jsp?id=51 (1 page).

(Continued)

Primary Examiner—Longbit Chai
(74) *Attorney, Agent, or Firm*—Snell & Wilmer L.L.P.

(57) **ABSTRACT**

The present invention discloses a system and methods for biometric security using hand geometry recognition biometrics in a transponder-reader system. The biometric security system also includes a hand geometry scan sensor that detects biometric samples and a device for verifying biometric samples. In one embodiment, the biometric security system includes a transponder configured with a hand geometry scan sensor. In another embodiment, the system includes a reader configured with a hand geometry scan sensor. In yet another embodiment, the present invention discloses methods for proffering and processing hand geometry scan samples to facilitate authorization of transactions.

20 Claims, 19 Drawing Sheets

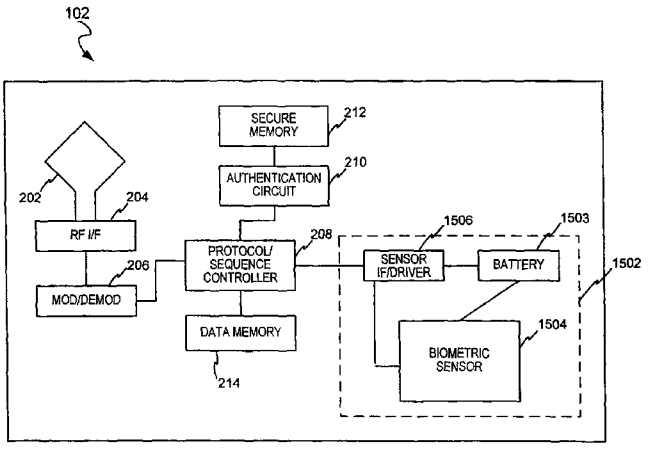

U.S. PATENT DOCUMENTS

3,914,762	A	10/1975	Klensch
4,066,873	A	1/1978	Schatz
4,206,965	A	6/1980	McGrew
4,303,904	A	12/1981	Chasek
4,318,554	A	3/1982	Anderson et al.
4,421,380	A	12/1983	McGrew
4,443,027	A	4/1984	McNeely et al.
4,453,074	A	6/1984	Weinstein
4,475,308	A	10/1984	Heise et al.
4,558,211	A	12/1985	Berstein
4,582,985	A	4/1986	Lofberg
4,583,766	A	4/1986	Wessel
4,589,686	A	5/1986	McGrew
4,593,936	A	6/1986	Opel
4,639,765	A	1/1987	d'Hont
4,656,463	A	4/1987	Anders et al.
4,663,518	A	5/1987	Borror et al.
4,672,021	A	6/1987	Blumel et al.
4,700,055	A	10/1987	Kashkashian, Jr.
4,717,221	A	1/1988	McGrew
4,725,719	A	2/1988	Oncken et al.
4,736,094	A	4/1988	Yoshida
4,739,328	A	4/1988	Koelle et al.
4,744,497	A	5/1988	O'Neal
4,747,147	A	5/1988	Sparrow
4,795,894	A	1/1989	Sugimoto et al.
4,829,690	A	5/1989	Andros
4,837,422	A	6/1989	Dethloff et al.
4,839,504	A	6/1989	Nakano
4,849,617	A	7/1989	Ueda
4,868,849	A	9/1989	Tamaoki
4,884,507	A	12/1989	Levy
4,910,521	A	3/1990	Mellon
4,918,432	A	4/1990	Pauley et al.
4,961,142	A	10/1990	Elliott et al.
4,984,270	A	1/1991	LaBounty
4,993,068	A	2/1991	Piosenka et al.
4,998,753	A	3/1991	Wichael
5,023,782	A	6/1991	Lutz et al.
5,053,774	A	10/1991	Schuermann et al.
5,068,894	A	11/1991	Hoppe
5,099,226	A	3/1992	Andrews
5,101,200	A	3/1992	Swett
5,125,356	A	6/1992	Galante
5,175,416	A	12/1992	Mansvelt et al.
5,180,902	A	1/1993	Schick et al.
5,193,114	A	3/1993	Moseley
5,197,140	A	3/1993	Balmer
5,198,647	A	3/1993	Mizuta
5,206,488	A	4/1993	Teicher
5,208,110	A	5/1993	Smith et al.
5,212,777	A	5/1993	Gove et al.
5,221,838	A	6/1993	Gutman et al.
5,222,282	A	6/1993	Sukonnik et al.
5,226,989	A	7/1993	Sukonnik
5,234,624	A	8/1993	Bauer et al.
5,239,654	A	8/1993	Ing-Simmons et al.
5,245,329	A	9/1993	Gokcebay
5,247,304	A	9/1993	d'Hont
5,257,656	A	11/1993	McLeroy
5,259,649	A	11/1993	Shomron
5,274,392	A	12/1993	d'Hont et al.
5,276,311	A	1/1994	Hennige
5,285,100	A	2/1994	Byatt
5,288,978	A	2/1994	Iijima
5,304,789	A	4/1994	Lob et al.
5,305,002	A	4/1994	Holodak et al.
5,308,121	A	5/1994	Gunn
5,321,751	A	6/1994	Ray et al.
5,326,964	A	7/1994	Risser
5,329,617	A	7/1994	Asal
5,331,138	A	7/1994	Saroya
5,339,447	A	8/1994	Balmer
5,349,357	A	9/1994	Schurmann et al.
5,351,052	A	9/1994	d'Hont et al.
5,359,522	A	10/1994	Ryan
5,365,551	A	11/1994	Snodgrass et al.
5,371,896	A	12/1994	Gove et al.
5,373,303	A	12/1994	d'Hont
5,397,881	A	3/1995	Mannik
5,407,893	A	4/1995	Kozhizuka et al.
5,408,243	A	4/1995	d'Hont
5,410,649	A	4/1995	Gove
5,412,192	A	5/1995	Hoss
5,428,363	A	6/1995	d'Hont
5,438,184	A	8/1995	Roberts et al.
5,453,747	A	9/1995	d'Hont et al.
5,461,217	A	10/1995	Claus
5,471,592	A	11/1995	Gove et al.
5,477,040	A	12/1995	Lalonde
5,479,494	A	12/1995	Clitherow
5,485,510	A	1/1996	Colbert
5,488,376	A	1/1996	Hurta et al.
5,489,411	A	2/1996	Jha et al.
5,489,908	A	2/1996	Orthmann et al.
5,490,079	A	2/1996	Sharpe et al.
5,491,483	A	2/1996	d'Hont
5,491,484	A	2/1996	Schuermann
5,491,715	A	2/1996	Flaxl
5,493,312	A	2/1996	Knebelkamp
5,497,121	A	3/1996	d'Hont
5,500,651	A	3/1996	Schuermann
5,503,434	A	4/1996	Gunn
5,513,272	A	4/1996	Bogosian, Jr.
5,513,525	A	5/1996	Schurmann
5,519,381	A	5/1996	Marsh et al.
5,521,966	A	5/1996	Friedes et al.
5,522,083	A	5/1996	Gove et al.
5,525,992	A	6/1996	Froschermeier
5,525,994	A	6/1996	Hurta et al.
5,528,222	A	6/1996	Moskowitz et al.
5,530,232	A	6/1996	Taylor
5,533,656	A	7/1996	Bonaldi
5,534,857	A	7/1996	Laing et al.
5,539,825	A	7/1996	Akiyama
5,541,604	A	7/1996	Meier
5,543,798	A	8/1996	Schuermann
5,544,246	A	8/1996	Mandelbaum et al.
5,548,291	A	8/1996	Meier et al.
5,550,536	A	8/1996	Flaxl
5,550,548	A	8/1996	Schuermann
5,552,789	A	9/1996	Schuermann
5,555,877	A	9/1996	Lockwood et al.
5,557,279	A	9/1996	d'Hont
5,557,516	A	9/1996	Hogan
5,559,504	A	9/1996	Itsumi et al.
5,559,887	A	9/1996	Davis et al.
5,561,430	A	10/1996	Knebelkamp
5,563,582	A	10/1996	d'Hont
5,569,187	A	10/1996	Kaiser
5,569,897	A	10/1996	Masuda
5,572,226	A	11/1996	Tuttle
5,577,109	A	11/1996	Stimson et al.
5,577,121	A	11/1996	Davis et al.
5,578,808	A	11/1996	Taylor
5,581,630	A	12/1996	Bonneau, Jr.
5,585,787	A	12/1996	Wallerstein
5,590,038	A	12/1996	Pitroda
5,590,197	A	12/1996	Chen et al.
5,592,150	A	1/1997	d'Hont
5,592,405	A	1/1997	Gove et al.
5,592,767	A	1/1997	Treske
5,594,233	A	1/1997	Kenneth et al.
5,594,448	A	1/1997	d'Hont

5,597,534 A 1/1997 Kaiser
5,600,175 A 2/1997 Orthmann
5,602,538 A 2/1997 Orthmann et al.
5,602,918 A 2/1997 Chen et al.
5,602,919 A 2/1997 Hurta et al.
5,604,342 A 2/1997 Fujioka
5,604,801 A 2/1997 Dolan et al.
5,606,520 A 2/1997 Gove et al.
5,606,594 A 2/1997 Register et al.
5,607,522 A 3/1997 McDonnell
5,608,406 A 3/1997 Eberth et al.
5,608,778 A 3/1997 Partridge, III
5,613,001 A 3/1997 Bakhoum
5,613,146 A 3/1997 Gove et al.
5,619,207 A 4/1997 d'Hont
5,621,396 A 4/1997 Flaxl
5,621,411 A 4/1997 Hagl et al.
5,621,412 A 4/1997 Sharpe et al.
5,625,366 A 4/1997 d'Hont
5,625,370 A 4/1997 d'Hont
5,625,695 A 4/1997 M'Raihi et al.
5,629,981 A 5/1997 Nerlikar
5,638,080 A 6/1997 Orthmann et al.
5,640,002 A 6/1997 Ruppert et al.
5,646,607 A 7/1997 Schurmann et al.
5,649,118 A 7/1997 Carlisle et al.
5,657,388 A 8/1997 Weiss
5,660,319 A 8/1997 Falcone et al.
5,673,106 A 9/1997 Thompson
5,675,342 A 10/1997 Sharpe
5,677,953 A 10/1997 Dolphin
5,686,920 A 11/1997 Hurta et al.
5,691,731 A 11/1997 van Erven
5,692,132 A 11/1997 Hogan
5,694,596 A 12/1997 Campbell
5,696,913 A 12/1997 Gove et al.
5,698,837 A 12/1997 Furuta
5,699,528 A 12/1997 Hogan
5,700,037 A 12/1997 Keller
5,701,127 A 12/1997 Sharpe
5,704,046 A 12/1997 Hogan
5,705,798 A 1/1998 Tarbox
5,705,852 A 1/1998 Orihara et al.
5,710,421 A 1/1998 Kokubu
5,715,399 A 2/1998 Bezos
5,721,781 A 2/1998 Deo et al.
5,725,098 A 3/1998 Seifert et al.
5,729,053 A 3/1998 Orthmann
5,729,236 A 3/1998 Flaxl
5,731,957 A 3/1998 Brennan
5,732,579 A 3/1998 d'Hont et al.
5,737,439 A 4/1998 Lapsley et al.
5,739,512 A 4/1998 Toganazzini
5,742,756 A 4/1998 Dillaway et al.
5,742,845 A 4/1998 Wagner
5,745,571 A 4/1998 Zuk
5,748,137 A 5/1998 d'Hont
5,748,737 A 5/1998 Daggar
5,757,917 A 5/1998 Rose et al.
5,758,195 A 5/1998 Balmer
5,761,306 A 6/1998 Lewis
5,761,493 A 6/1998 Blakeley et al.
5,764,789 A 6/1998 Pare, Jr. et al.
5,768,609 A 6/1998 Gove et al.
5,769,457 A 6/1998 Warther
5,770,843 A 6/1998 Rose et al.
5,773,812 A 6/1998 Kreft
5,774,882 A 6/1998 Keen et al.
5,777,903 A 7/1998 Piosenka
5,778,067 A 7/1998 Jones et al.
5,778,173 A 7/1998 Apte
5,785,680 A 7/1998 Niezink et al.
5,789,733 A 8/1998 Jachimowicz et al.
5,792,337 A 8/1998 Padovani et al.
5,793,324 A 8/1998 Aslanidis et al.
5,794,095 A 8/1998 Thompson
5,796,831 A 8/1998 Paradinas et al.
5,797,060 A 8/1998 Thompson
5,797,085 A 8/1998 Buek et al.
5,797,133 A 8/1998 Jones et al.
5,798,709 A 8/1998 Flaxl
5,799,087 A 8/1998 Rosen
5,806,045 A 9/1998 Biorge et al.
5,809,142 A 9/1998 Hurta et al.
5,809,288 A 9/1998 Balmer
5,809,633 A 9/1998 Mundigl et al.
5,815,252 A 9/1998 Price-Francis
5,815,657 A 9/1998 Williams et al.
5,825,007 A 10/1998 Jesadanont
5,825,302 A 10/1998 Stafford
5,826,077 A 10/1998 Blakeley et al.
5,826,241 A 10/1998 Stein et al.
5,826,243 A 10/1998 Musmanno et al.
5,828,044 A 10/1998 Jun et al.
5,834,756 A 11/1998 Gutman et al.
5,835,894 A 11/1998 Adcock et al.
5,838,257 A 11/1998 Lambropoulos
5,838,720 A 11/1998 Morelli
5,838,812 A 11/1998 Pare, Jr. et al.
5,841,364 A 11/1998 Hagl et al.
5,842,088 A 11/1998 Thompson
5,844,218 A 12/1998 Kawan et al.
5,844,230 A 12/1998 Lalonde
5,845,267 A 12/1998 Ronen
5,851,149 A 12/1998 Xidos et al.
5,852,812 A 12/1998 Reeder
5,854,891 A 12/1998 Postlewaite et al.
5,857,079 A 1/1999 Claus et al.
5,857,152 A 1/1999 Everett
5,858,006 A 1/1999 Van der AA et al.
5,859,419 A 1/1999 Wynn
5,859,779 A 1/1999 Giordano et al.
5,864,306 A 1/1999 Dwyer et al.
5,864,323 A 1/1999 Berthon
5,867,100 A 2/1999 d'Hont
5,869,822 A 2/1999 Meadows et al.
5,870,031 A 2/1999 Kaiser et al.
5,870,915 A 2/1999 d'Hont
5,875,432 A 2/1999 Sehr
5,878,215 A 3/1999 Kling et al.
5,878,337 A 3/1999 Joao et al.
5,878,403 A 3/1999 DeFrancesco et al.
5,880,675 A 3/1999 Trautner
5,881,272 A 3/1999 Balmer
5,883,377 A 3/1999 Chapin, Jr.
5,883,810 A 3/1999 Franklin et al.
5,884,271 A 3/1999 Pitroda
5,884,292 A 3/1999 Baker et al.
5,887,266 A 3/1999 Heinonen et al.
5,889,941 A 3/1999 Tushie et al.
5,890,137 A 3/1999 Koreeda
5,892,211 A 4/1999 Davis et al.
5,898,783 A 4/1999 Rohrbach
5,898,838 A 4/1999 Wagner
5,901,239 A 5/1999 Kamei
5,903,830 A 5/1999 Joao et al.
5,905,798 A 5/1999 Nerlikar et al.
5,905,908 A 5/1999 Wagner
5,907,620 A 5/1999 Klemba et al.
5,912,446 A 6/1999 Wong et al.
5,912,678 A 6/1999 Saxena et al.
5,914,472 A 6/1999 Foladare et al.
5,915,973 A 6/1999 Hoehn-Saric et al.
5,917,168 A 6/1999 Nakamura et al.
5,917,913 A 6/1999 Wang
5,917,925 A 6/1999 Moore

5,920,058 A 7/1999 Weber et al.
5,920,628 A 7/1999 Indeck et al.
5,920,629 A 7/1999 Rosen
5,920,847 A 7/1999 Kolling et al.
5,923,734 A 7/1999 Taskett
5,923,884 A 7/1999 Peyret et al.
5,924,080 A 7/1999 Johnson
5,929,801 A 7/1999 Aslanidis et al.
5,930,767 A 7/1999 Reber et al.
5,931,917 A 8/1999 Nguyen et al.
5,933,624 A 8/1999 Balmer
5,936,226 A 8/1999 Aucsmith
5,942,761 A 8/1999 Tuli
5,943,624 A 8/1999 Fox et al.
5,948,116 A 9/1999 Aslanidis et al.
5,950,174 A 9/1999 Brendzel
5,950,179 A 9/1999 Buchanan
5,953,512 A 9/1999 Cai et al.
5,953,710 A 9/1999 Fleming
5,955,717 A 9/1999 Vanstone
5,955,951 A 9/1999 Wischerop et al.
5,955,969 A 9/1999 d'Hont
5,956,024 A 9/1999 Strickland et al.
5,956,693 A 9/1999 Geerlings
5,956,699 A 9/1999 Wong et al.
5,960,416 A 9/1999 Block
5,963,924 A 10/1999 Williams et al.
5,969,318 A 10/1999 Mackenthun
5,970,148 A 10/1999 Meier
5,970,470 A 10/1999 Walker
5,974,238 A 10/1999 Chase, Jr.
RE36,365 E 11/1999 Levine et al.
5,978,840 A 11/1999 Nguyen et al.
5,979,757 A 11/1999 Tracy et al.
5,982,293 A 11/1999 Everett et al.
5,983,200 A 11/1999 Slotznick
5,983,208 A 11/1999 Haller
5,987,140 A 11/1999 Rowney et al.
5,987,155 A 11/1999 Dunn et al.
5,987,498 A 11/1999 Athing et al.
5,988,497 A 11/1999 Wallace
5,988,510 A 11/1999 Tuttle
5,989,950 A 11/1999 Wu
5,991,608 A 11/1999 Leyten
5,991,748 A 11/1999 Taskett
5,991,750 A 11/1999 Watson
5,995,014 A 11/1999 DiMaria
5,996,076 A 11/1999 Rowney et al.
6,002,438 A 12/1999 Hocevar et al.
6,002,767 A 12/1999 Kramer
6,003,014 A 12/1999 Lee et al.
6,005,942 A 12/1999 Chan et al.
6,006,216 A 12/1999 Griffin et al.
6,011,487 A 1/2000 Plocher
6,012,039 A 1/2000 Hoffman et al.
6,012,049 A 1/2000 Kawan
6,012,636 A 1/2000 Smith
6,014,645 A 1/2000 Cunningham
6,016,476 A 1/2000 Maes et al.
6,018,717 A 1/2000 Lee et al.
RE36,580 E 2/2000 Bogosian, Jr.
6,021,943 A 2/2000 Chastain
6,024,286 A 2/2000 Bradley et al.
6,029,149 A 2/2000 Dykstra et al.
6,029,175 A 2/2000 Chow
6,029,892 A 2/2000 Miyake
6,032,136 A 2/2000 Brake, Jr. et al.
6,036,100 A 3/2000 Asami
6,038,292 A 3/2000 Thomas
6,038,584 A 3/2000 Balmer
6,041,410 A 3/2000 Hsu et al.
6,044,360 A 3/2000 Picciallo
6,047,888 A 4/2000 Dethloff
6,050,494 A 4/2000 Song et al.
6,052,675 A 4/2000 Checchio
6,058,476 A 5/2000 Matsuzaki et al.
6,060,815 A 5/2000 Nysen
6,061,344 A 5/2000 Wood, Jr.
6,064,320 A 5/2000 d'Hont et al.
6,065,675 A 5/2000 Teicher
6,068,184 A 5/2000 Barnett
6,068,193 A 5/2000 Kreft
6,070,003 A 5/2000 Gove et al.
6,072,870 A 6/2000 Nguyen et al.
6,073,112 A 6/2000 Geerlings
6,073,236 A 6/2000 Kusakabe et al.
6,073,840 A 6/2000 Marion
6,076,296 A 6/2000 Schaeffer
6,078,888 A 6/2000 Johnson, Jr.
6,078,908 A 6/2000 Schmitz
RE36,788 E 7/2000 Mansvelt et al.
6,085,976 A 7/2000 Sehr
6,088,683 A 7/2000 Jalili
6,088,686 A 7/2000 Walker et al.
6,089,611 A 7/2000 Blank
6,091,835 A 7/2000 Smithies et al.
6,092,057 A 7/2000 Zimmerman et al.
6,095,413 A 8/2000 Tetro et al.
6,095,567 A 8/2000 Buell
6,098,879 A 8/2000 Terranova
6,099,043 A 8/2000 Story
6,101,174 A 8/2000 Langston
6,101,477 A 8/2000 Hohle et al.
6,102,162 A 8/2000 Teicher
6,102,672 A 8/2000 Woollenweber
6,104,281 A 8/2000 Heinrich et al.
6,104,311 A 8/2000 Lastinger
6,104,922 A 8/2000 Baumann
6,105,008 A 8/2000 Davis et al.
6,105,013 A 8/2000 Curry et al.
6,105,865 A 8/2000 Hardesty
6,107,920 A 8/2000 Eberhardt et al.
6,108,641 A 8/2000 Kenna et al.
6,109,525 A 8/2000 Blomqvist et al.
6,112,152 A 8/2000 Tuttle
6,112,984 A 9/2000 Snavely
6,115,360 A 9/2000 Quay et al.
6,116,423 A 9/2000 Troxtell, Jr. et al.
6,116,505 A 9/2000 Withrow
6,116,736 A 9/2000 Stark et al.
6,118,189 A 9/2000 Flaxl
6,120,461 A 9/2000 Smyth
6,121,544 A 9/2000 Petsinger
6,123,223 A 9/2000 Watkins
6,129,274 A 10/2000 Suzuki
6,130,623 A 10/2000 MacLellan et al.
6,133,834 A 10/2000 Eberth et al.
6,138,913 A 10/2000 Cyr et al.
6,138,917 A 10/2000 Chapin, Jr.
6,141,651 A 10/2000 Riley et al.
6,144,916 A 11/2000 Wood et al.
6,144,948 A 11/2000 Walker et al.
6,148,093 A 11/2000 McConnell et al.
6,154,879 A 11/2000 Pare et al.
6,157,824 A 12/2000 Bailey
6,163,771 A 12/2000 Walker et al.
6,167,236 A 12/2000 Kaiser et al.
6,168,083 B1 1/2001 Berger et al.
6,173,269 B1 1/2001 Solokl et al.
6,173,897 B1 1/2001 Halpern
6,173,898 B1 1/2001 Mande
6,173,899 B1 1/2001 Rozin
6,177,859 B1 1/2001 Tuttle et al.
6,177,860 B1 1/2001 Cromer et al.
6,179,205 B1 1/2001 Sloan
6,179,206 B1 1/2001 Matsumori

6,185,307 B1 2/2001 Johnson, Jr.
6,188,994 B1 2/2001 Egendorf
6,189,787 B1 2/2001 Dorf
6,192,255 B1 2/2001 Lewis et al.
6,195,006 B1 2/2001 Bowers et al.
6,198,728 B1 3/2001 Hulyalkar et al.
6,198,875 B1 3/2001 Edenson et al.
6,199,079 B1 3/2001 Gupta et al.
6,199,762 B1 3/2001 Hohle
6,202,927 B1 3/2001 Bashan et al.
6,205,151 B1 3/2001 Quay et al.
6,206,293 B1 3/2001 Gutman et al.
6,213,390 B1 4/2001 Oneda
6,213,391 B1 4/2001 Lewis
6,215,437 B1 4/2001 Schurmann et al.
6,216,219 B1 4/2001 Cai et al.
6,219,439 B1 4/2001 Burger
6,219,639 B1 4/2001 Bakis et al.
6,220,510 B1 4/2001 Everett et al.
D442,627 S 5/2001 Webb et al.
D442,629 S 5/2001 Webb et al.
6,223,984 B1 5/2001 Renner et al.
6,224,109 B1 5/2001 Yang
6,226,382 B1 5/2001 M'Raihi et al.
6,227,447 B1 5/2001 Campisano
6,230,270 B1 5/2001 Laczko, Sr.
6,232,917 B1 5/2001 Baumer et al.
6,233,348 B1 5/2001 Fujii et al.
6,233,683 B1 5/2001 Chan et al.
6,237,848 B1 5/2001 Everett
6,239,675 B1 5/2001 Flaxl
6,240,187 B1 5/2001 Lewis
6,240,989 B1 6/2001 Masoud
6,250,554 B1 6/2001 Leo et al.
6,250,557 B1 6/2001 Forslund et al.
6,257,486 B1 7/2001 Teicher et al.
6,257,620 B1 7/2001 Kenney
6,259,769 B1 7/2001 Page
6,260,026 B1 7/2001 Tomida et al.
6,260,088 B1 7/2001 Gove et al.
6,263,316 B1 7/2001 Khan et al.
6,263,446 B1 7/2001 Kausik et al.
6,264,106 B1 7/2001 Bridgelall
6,265,977 B1 7/2001 Vega et al.
6,266,754 B1 7/2001 Laczko, Sr. et al.
6,267,292 B1 7/2001 Walker et al.
6,268,788 B1 7/2001 Gray
6,269,348 B1 7/2001 Pare, Jr. et al.
6,273,335 B1 8/2001 Sloan
6,282,522 B1 8/2001 Davis et al.
D447,515 S 9/2001 Faenza, Jr. et al.
6,286,763 B1 9/2001 Reynolds et al.
6,289,324 B1 9/2001 Kawan
6,290,137 B1 9/2001 Kiekhaefer
6,293,462 B1 9/2001 Gangi
6,295,522 B1 9/2001 Boesch
6,297,727 B1 10/2001 Nelson, Jr.
6,304,223 B1 10/2001 Hilton et al.
6,307,956 B1 10/2001 Black
6,309,098 B1 10/2001 Wong
6,315,193 B1 11/2001 Hogan
6,315,195 B1 11/2001 Ramacchandran
6,317,721 B1 11/2001 Hurta et al.
6,317,755 B1 11/2001 Rakers et al.
6,318,636 B1 11/2001 Reynolds et al.
6,323,566 B1 11/2001 Meier
6,325,285 B1 12/2001 Baratelli
6,325,293 B1 12/2001 Moreno
6,326,934 B1 12/2001 Kinzie
6,327,573 B1 12/2001 Walker et al.
6,327,578 B1 12/2001 Linehan
6,329,920 B1 12/2001 Morrison et al.
6,331,972 B1 12/2001 Harris et al.
6,332,134 B1 12/2001 Foster
6,332,193 B1 12/2001 Glass et al.
6,338,048 B1 1/2002 Mori
6,339,384 B1 1/2002 Valdes-Rodriguez
6,342,844 B1 1/2002 Rozin
6,353,420 B1 3/2002 Chung
6,353,811 B1 3/2002 Weissman
6,360,953 B1 3/2002 Lin et al.
6,364,208 B1 4/2002 Stanford et al.
6,367,011 B1 4/2002 Lee et al.
6,374,245 B1 4/2002 Park
6,377,034 B1 4/2002 Ivanov
6,378,073 B1 4/2002 Davis et al.
6,386,444 B1 5/2002 Sullivan
6,388,533 B2 5/2002 Swoboda
6,390,375 B2 5/2002 Kayanakis
6,400,272 B1 6/2002 Holtzman et al.
6,402,026 B1 6/2002 Schwier
6,402,028 B1 6/2002 Graham, Jr. et al.
6,406,935 B2 6/2002 Kayanakis et al.
6,411,611 B1 6/2002 Van der Tuijn
6,415,978 B1 7/2002 McAllister
6,421,650 B1 7/2002 Goetz et al.
6,422,462 B1 7/2002 Cohen
6,422,464 B1 7/2002 Terranova
6,422,472 B1 7/2002 Thevenot et al.
6,424,029 B1 7/2002 Giesler
6,424,249 B1 7/2002 Houvener
RE37,822 E 8/2002 Anthonyson
6,427,910 B1 8/2002 Barnes et al.
6,435,415 B1 8/2002 Catte
6,439,455 B1 8/2002 Everett et al.
6,442,532 B1 8/2002 Kawan
6,446,862 B1 9/2002 Mann
6,457,996 B1 10/2002 Shih
6,466,804 B1 10/2002 Pecen et al.
6,471,127 B2 10/2002 Pentz et al.
6,473,500 B1 10/2002 Risafi et al.
6,480,100 B1 11/2002 Frieden et al.
6,480,101 B1 11/2002 Kelly et al.
6,480,825 B1 11/2002 Sharma et al.
6,481,621 B1 11/2002 Herrendoerfer et al.
6,481,632 B2 11/2002 Wentker et al.
6,483,427 B1 11/2002 Werb
6,483,477 B1 11/2002 Plonka
6,483,929 B1 11/2002 Murakami et al.
6,484,937 B1 11/2002 Devaux et al.
6,490,443 B1 12/2002 Freeny, Jr.
6,491,229 B1 12/2002 Berney
6,491,639 B1 12/2002 Turcott
6,494,367 B1 12/2002 Zacharias
6,494,380 B2 12/2002 Jarosz
6,496,594 B1 12/2002 Prokoski
6,505,772 B1 1/2003 Mollett et al.
6,507,662 B1 1/2003 Brooks
6,507,762 B1 1/2003 Amro et al.
6,510,983 B2 1/2003 Horowitz et al.
6,510,998 B1 1/2003 Stanford et al.
6,513,015 B2 1/2003 Ogasawara
6,519,565 B1 2/2003 Clements et al.
6,529,880 B1 3/2003 McKeen et al.
6,535,726 B1 3/2003 Johnson
6,539,101 B1 3/2003 Black
6,546,373 B1 4/2003 Cerra
6,547,133 B1 4/2003 DeVries, Jr. et al.
6,549,912 B1 4/2003 Chen
6,560,581 B1 5/2003 Fox et al.
6,575,361 B1 6/2003 Graves et al.
6,577,229 B1 6/2003 Bonneau et al.
6,578,768 B1 6/2003 Binder et al.
6,581,839 B1 6/2003 Lasch et al.
6,587,835 B1 7/2003 Treyz et al.
6,588,660 B1 7/2003 Buescher et al.

6,588,673 B1 7/2003 Chan et al.
6,589,119 B1 7/2003 Orus et al.
6,591,249 B2 7/2003 Zoka
6,598,024 B1 7/2003 Walker et al.
6,601,759 B2 8/2003 Fife et al.
6,601,762 B2 8/2003 Piotrowski
6,608,995 B1 8/2003 Kawasaki et al.
6,609,655 B1 8/2003 Harrell
6,609,656 B1 8/2003 Elledge
6,609,658 B1 8/2003 Sehr
6,626,356 B2 9/2003 Davenport et al.
6,628,961 B1 9/2003 Ho et al.
6,629,591 B1 10/2003 Griswold et al.
6,631,849 B2 10/2003 Blossom
6,636,620 B1 10/2003 Hoshino
6,636,833 B1 10/2003 Flitcroft et al.
6,650,887 B2 11/2003 McGregor et al.
6,657,614 B1 12/2003 Ito et al.
6,662,166 B2 12/2003 Pare, Jr. et al.
6,665,405 B1 12/2003 Lenstra
6,669,086 B2 12/2003 Abdi et al.
6,671,358 B1 12/2003 Seidman et al.
6,674,786 B1 1/2004 Nakamura et al.
6,679,427 B1 1/2004 Kuroiwa
6,681,328 B1 1/2004 Harris et al.
6,684,269 B2 1/2004 Wagner
6,685,089 B2 2/2004 Terranova et al.
6,686,847 B1 2/2004 Mittler
6,687,714 B1 2/2004 Kogen et al.
6,690,930 B1 2/2004 Dupre
6,693,513 B2 2/2004 Tuttle
6,697,947 B1 2/2004 Matyas, Jr. et al.
6,703,918 B1 3/2004 Kita
6,704,608 B1 3/2004 Azuma
6,705,530 B2 3/2004 Kiekhaefer
6,708,375 B1 3/2004 Johnson
6,711,262 B1 3/2004 Vatanen
6,725,202 B1 4/2004 Hurta et al.
6,732,919 B2 5/2004 Macklin et al.
6,732,936 B1 5/2004 Kiekhaefer
6,742,120 B1 5/2004 Markakis et al.
6,747,546 B1 6/2004 Hikita et al.
6,749,123 B2 6/2004 Lasch et al.
6,760,581 B2 7/2004 Dutta
6,764,014 B2 7/2004 Lasch et al.
6,765,470 B2 7/2004 Shinzaki
6,771,981 B1 8/2004 Zalewski et al.
6,786,400 B1 9/2004 Bucci
6,789,012 B1 9/2004 Childs et al.
6,789,733 B2 9/2004 Terranova et al.
6,793,141 B1 9/2004 Graham
6,799,726 B2 10/2004 Stockhammer
6,816,058 B2 11/2004 McGregor et al.
6,819,219 B1 11/2004 Bolle et al.
6,830,193 B2 12/2004 Tanaka
6,834,795 B1 12/2004 Rasmussen et al.
6,853,894 B1 2/2005 Kolls
6,857,566 B2 2/2005 Wankmueller
6,859,672 B2 2/2005 Roberts et al.
6,873,974 B1 3/2005 Schutzer
6,877,097 B2 4/2005 Hamid et al.
6,895,310 B1 5/2005 Kolls
6,898,299 B1 5/2005 Brooks
H2120 H 7/2005 Cudlitz
6,914,517 B2 7/2005 Kinsella
6,915,277 B1 7/2005 Manchester et al.
6,924,729 B1 8/2005 Aschauer et al.
6,925,439 B1 8/2005 Pitroda
6,925,565 B2 8/2005 Black
6,928,181 B2 8/2005 Brooks
6,931,538 B1 8/2005 Sawaguchi
6,934,861 B2 8/2005 Haala
D509,243 S 9/2005 Hunter, Jr. et al.
6,940,461 B2 9/2005 Nantz et al.
6,944,768 B2 9/2005 Siegel et al.
6,978,369 B2 12/2005 Wheeler et al.
6,978,933 B2 12/2005 Yap et al.
7,004,385 B1 2/2006 Douglass
7,006,993 B1 2/2006 Cheong et al.
7,049,962 B2 5/2006 Atherton et al.
7,051,925 B2 5/2006 Schwarz, Jr.
7,059,159 B2 6/2006 Lanigan et al.
7,069,444 B2 6/2006 Lowensohn et al.
7,070,112 B2 7/2006 Beenau et al.
7,093,767 B2 8/2006 Faenza et al.
7,102,523 B2 9/2006 Shanks et al.
7,119,659 B2 10/2006 Bonalle et al.
7,132,946 B2 11/2006 Waldner et al.
7,136,835 B1 11/2006 Flitcroft et al.
7,171,662 B1 1/2007 Misara et al.
7,172,112 B2 2/2007 Bonalle et al.
7,184,747 B2 2/2007 Bogat
7,287,695 B2 10/2007 Wankmueller
7,363,505 B2 4/2008 Black
7,419,093 B1 9/2008 Blackson, et al.
2001/0013542 A1 8/2001 Horowitz et al.
2001/0013546 A1 8/2001 Ross
2001/0013551 A1 8/2001 Ramachandran
2001/0017584 A1 8/2001 Shinzaki
2001/0018660 A1 8/2001 Sehr
2001/0024157 A1 9/2001 Hansmann et al.
2001/0029493 A1 10/2001 Pare et al.
2001/0030238 A1 10/2001 Arisawa
2001/0034565 A1 10/2001 Leatherman
2001/0034623 A1 10/2001 Chung
2001/0034720 A1 10/2001 Armes et al.
2001/0036301 A1 11/2001 Yamaguchi et al.
2001/0036835 A1 11/2001 Leedom, Jr.
2001/0039617 A1 11/2001 Buhrlen et al.
2001/0040507 A1 11/2001 Eckstein et al.
2001/0053239 A1 12/2001 Takhar
2002/0005774 A1 1/2002 Rudolph et al.
2002/0011519 A1 1/2002 Shults
2002/0014952 A1 2/2002 Terranova
2002/0019807 A1 2/2002 Halpern
2002/0026575 A1 2/2002 Wheeler et al.
2002/0028704 A1 3/2002 Bloomfield et al.
2002/0030581 A1 3/2002 Janiak et al.
2002/0035548 A1 3/2002 Hogan et al.
2002/0036237 A1 3/2002 Atherton et al.
2002/0040935 A1 4/2002 Weyant
2002/0040936 A1 4/2002 Wentker et al.
2002/0043566 A1 4/2002 Goodman et al.
2002/0052839 A1 5/2002 Takatori
2002/0062249 A1 5/2002 Iannacci
2002/0062284 A1 5/2002 Kawan
2002/0062291 A1 5/2002 Zoka
2002/0066784 A1 6/2002 Segal et al.
2002/0072349 A1 6/2002 Geiselman et al.
2002/0073025 A1 6/2002 Tanner et al.
2002/0074398 A1 6/2002 Lancos et al.
2002/0077837 A1 6/2002 Krueger et al.
2002/0077895 A1 6/2002 Howell
2002/0077992 A1 6/2002 Tobin
2002/0079367 A1 6/2002 Montani
2002/0083320 A1 6/2002 Vatanen
2002/0087869 A1 7/2002 Kim
2002/0092914 A1 7/2002 Pentz et al.
2002/0095343 A1 7/2002 Barton et al.
2002/0095389 A1 7/2002 Gaines
2002/0095587 A1 7/2002 Doyle et al.
2002/0095588 A1 7/2002 Shigematsu et al.
2002/0097142 A1 7/2002 Janiak et al.
2002/0097144 A1 7/2002 Collins et al.
2002/0107007 A1 8/2002 Gerson
2002/0107742 A1 8/2002 Magill

2002/0108062 A1 8/2002 Nakajima et al.
2002/0109580 A1 8/2002 Shreve et al.
2002/0111210 A1 8/2002 Luciano, Jr. et al.
2002/0111917 A1 8/2002 Hoffman et al.
2002/0113082 A1 8/2002 Leatherman et al.
2002/0116274 A1 8/2002 Hind et al.
2002/0120584 A1 8/2002 Hogan et al.
2002/0126010 A1 9/2002 Trimble et al.
2002/0128977 A1 9/2002 Nambiar et al.
2002/0131567 A1 9/2002 Maginas
2002/0133725 A1 9/2002 Roy et al.
2002/0138351 A1 9/2002 Houvener et al.
2002/0138438 A1 9/2002 Bardwell
2002/0139839 A1 10/2002 Catan
2002/0140542 A1 10/2002 Prokoski et al.
2002/0145043 A1 10/2002 Challa et al.
2002/0147002 A1 10/2002 Trop et al.
2002/0147600 A1 10/2002 Waters et al.
2002/0147913 A1 10/2002 Lun Yip
2002/0148892 A1 10/2002 Bardwell
2002/0152123 A1 10/2002 Giordano et al.
2002/0153424 A1 10/2002 Li
2002/0154795 A1 10/2002 Lee et al.
2002/0158747 A1 10/2002 McGregor et al.
2002/0163421 A1 11/2002 Wang et al.
2002/0166891 A1 11/2002 Stoutenburg et al.
2002/0169673 A1 11/2002 Prorock et al.
2002/0174067 A1 11/2002 Hoffman et al.
2002/0175805 A9 11/2002 Armstrong et al.
2002/0176522 A1 11/2002 Fan
2002/0178063 A1 11/2002 Gravelle et al.
2002/0178124 A1 11/2002 Lewis
2002/0178369 A1 11/2002 Black
2002/0179704 A1 12/2002 Deaton
2002/0185543 A1 12/2002 Pentz et al.
2002/0186133 A1 12/2002 Loof
2002/0186838 A1 12/2002 Brandys
2002/0188501 A1 12/2002 Lefkowith
2002/0188855 A1 12/2002 Nakayama et al.
2002/0190124 A1 12/2002 Piotrowski
2002/0190125 A1 12/2002 Stockhammer
2002/0191816 A1 12/2002 Maritzen et al.
2002/0192856 A1 12/2002 Halope et al.
2002/0193102 A1 12/2002 Hyyppa et al.
2002/0194303 A1 12/2002 Suila et al.
2002/0194503 A1 12/2002 Faith et al.
2002/0196963 A1 12/2002 Bardwell
2003/0001006 A1 1/2003 Lee
2003/0004866 A1 1/2003 Huennekens et al.
2003/0004881 A1 1/2003 Shinzaki et al.
2003/0005310 A1 1/2003 Shinzaki
2003/0006901 A1 1/2003 Kim et al.
2003/0009382 A1 1/2003 D'Arbeloff et al.
2003/0014307 A1 1/2003 Heng
2003/0014357 A1 1/2003 Chrisekos et al.
2003/0014891 A1 1/2003 Nelms et al.
2003/0018532 A1 1/2003 Dudek et al.
2003/0018893 A1 1/2003 Hess
2003/0025600 A1 2/2003 Blanchard
2003/0028481 A1 2/2003 Flitcroft et al.
2003/0033697 A1 2/2003 Hicks et al.
2003/0037264 A1 2/2003 Ezaki et al.
2003/0037851 A1 2/2003 Hogganvik
2003/0046228 A1 3/2003 Berney
2003/0046237 A1 3/2003 Uberti
2003/0046540 A1 3/2003 Nakamura et al.
2003/0054836 A1 3/2003 Michot
2003/0055727 A1 3/2003 Walker et al.
2003/0057226 A1 3/2003 Long
2003/0057278 A1 3/2003 Wong
2003/0061172 A1 3/2003 Robinson
2003/0069828 A1 4/2003 Blazey et al.
2003/0069846 A1 4/2003 Marcon
2003/0074317 A1 4/2003 Hofi
2003/0086591 A1 5/2003 Simon
2003/0093187 A1 5/2003 Walker
2003/0097344 A1 5/2003 Chaum et al.
2003/0106935 A1 6/2003 Burchette, Jr.
2003/0112120 A1 6/2003 K.
2003/0112972 A1 6/2003 Hattick et al.
2003/0120554 A1 6/2003 Hogan et al.
2003/0120626 A1 6/2003 Piotrowski
2003/0121969 A1 7/2003 Wankmueller
2003/0122120 A1 7/2003 Brazis et al.
2003/0123714 A1 7/2003 O'Gorman et al.
2003/0125054 A1 7/2003 Garcia
2003/0130820 A1 7/2003 Lane, III
2003/0132284 A1 7/2003 Reynolds et al.
2003/0132297 A1 7/2003 McCall et al.
2003/0140228 A1 7/2003 Binder
2003/0149661 A1 8/2003 Mitchell et al.
2003/0149662 A1 8/2003 Shore
2003/0150911 A1 8/2003 Joseph
2003/0152252 A1 8/2003 Kondo et al.
2003/0155416 A1 8/2003 Macklin et al.
2003/0159044 A1 8/2003 Doyle et al.
2003/0160074 A1 8/2003 Pineda
2003/0163699 A1 8/2003 Pailles et al.
2003/0167207 A1 9/2003 Berardi et al.
2003/0173408 A1 9/2003 Mosher, Jr. et al.
2003/0177102 A1 9/2003 Robinson
2003/0177347 A1 9/2003 Schneier et al.
2003/0183689 A1 10/2003 Swift et al.
2003/0183695 A1 10/2003 Lebrec et al.
2003/0183699 A1 10/2003 Masui
2003/0187786 A1 10/2003 Swift et al.
2003/0187787 A1 10/2003 Freund
2003/0187790 A1 10/2003 Swift et al.
2003/0187796 A1 10/2003 Swift et al.
2003/0191949 A1 10/2003 Odagawa
2003/0195842 A1 10/2003 Reece
2003/0195843 A1 10/2003 Matsuda et al.
2003/0200184 A1 10/2003 Dominguez et al.
2003/0208439 A1 11/2003 Rast
2003/0218066 A1 11/2003 Fernandes et al.
2003/0220876 A1 11/2003 Burger et al.
2003/0222153 A1 12/2003 Pentz et al.
2003/0223625 A1 12/2003 Hillhouse et al.
2003/0225623 A1 12/2003 Wankmueller
2003/0225713 A1 12/2003 Atkinson et al.
2003/0226041 A1 12/2003 Palmer et al.
2003/0227550 A1 12/2003 Manico et al.
2003/0229793 A1 12/2003 McCall et al.
2003/0230514 A1 12/2003 Baker
2003/0233334 A1 12/2003 Smith
2003/0236704 A1 12/2003 Antonucci
2004/0006497 A1 1/2004 Nestor et al.
2004/0010462 A1 1/2004 Moon et al.
2004/0011877 A1 1/2004 Reppermund
2004/0014457 A1 1/2004 Stevens
2004/0015451 A1 1/2004 Sahota et al.
2004/0016796 A1 1/2004 Hanna et al.
2004/0017934 A1 1/2004 Kocher
2004/0020982 A1 2/2004 Hoffman et al.
2004/0021552 A1 2/2004 Koo
2004/0024694 A1 2/2004 Lawrence et al.
2004/0026518 A1 2/2004 Kudo et al.
2004/0029569 A1 2/2004 Khan et al.
2004/0030601 A1 2/2004 Pond et al.
2004/0031856 A1 2/2004 Atsmon et al.
2004/0039814 A1 2/2004 Crabtree et al.
2004/0039860 A1 2/2004 Mills et al.
2004/0041021 A1 3/2004 Nugent, Jr.
2004/0041690 A1 3/2004 Yamagishi
2004/0044627 A1 3/2004 Russell et al.
2004/0046034 A1 3/2004 Ey Yamani et al.

2004/0049687	A1	3/2004	Orsini
2004/0050930	A1	3/2004	Rowe
2004/0052406	A1	3/2004	Brooks
2004/0059923	A1	3/2004	ShamRao
2004/0061593	A1	4/2004	Lane
2004/0062423	A1	4/2004	Doi
2004/0083380	A1	4/2004	Janke
2004/0084524	A1	5/2004	Ramachandran
2004/0084542	A1	5/2004	DeYoe et al.
2004/0098336	A1	5/2004	Flink
2004/0118930	A1	6/2004	Berardi et al.
2004/0127256	A1	7/2004	Goldthwaite et al.
2004/0129787	A1	7/2004	Saito et al.
2004/0131237	A1	7/2004	Machida
2004/0133787	A1	7/2004	Doughty et al.
2004/0136573	A1	7/2004	Sato
2004/0139021	A1	7/2004	Reed et al.
2004/0144841	A1	7/2004	Tsukamoto et al.
2004/0149820	A1	8/2004	Zuili
2004/0155101	A1	8/2004	Royer et al.
2004/0158723	A1	8/2004	Root
2004/0160310	A1	8/2004	Chen et al.
2004/0161135	A1	8/2004	Sano et al.
2004/0165753	A1	8/2004	Takhiri et al.
2004/0172541	A1	9/2004	Ando et al.
2004/0176071	A1	9/2004	Gehrmann et al.
2004/0177045	A1	9/2004	Brown
2004/0178063	A1	9/2004	Mirchi et al.
2004/0180657	A1	9/2004	Yaqub et al.
2004/0188519	A1	9/2004	Cassone
2004/0195314	A1	10/2004	Lee
2004/0199469	A1	10/2004	Barillova et al.
2004/0202354	A1	10/2004	Togino
2004/0208343	A1	10/2004	Golden et al.
2004/0215575	A1	10/2004	Garrity
2004/0222803	A1	11/2004	Tartagni
2004/0230488	A1	11/2004	Beenau et al.
2004/0232220	A1	11/2004	Beenau et al.
2004/0232224	A1	11/2004	Beenau et al.
2004/0233039	A1	11/2004	Beenau et al.
2004/0235450	A1	11/2004	Rosenberg
2004/0236680	A1	11/2004	Luoffo et al.
2004/0236701	A1	11/2004	Beenau et al.
2004/0239480	A1	12/2004	Beenau et al.
2004/0240711	A1	12/2004	Hamza et al.
2004/0255168	A1	12/2004	Murashita et al.
2004/0257196	A1	12/2004	Kotzin
2004/0258282	A1	12/2004	Bjorn et al.
2005/0001711	A1	1/2005	Doughty et al.
2005/0004921	A1	1/2005	Beenau et al.
2005/0005172	A1	1/2005	Haala
2005/0017068	A1	1/2005	Zalewski et al.
2005/0018658	A1	1/2005	Ikeda et al.
2005/0020304	A1	1/2005	Shinzaki
2005/0021457	A1	1/2005	Johnson et al.
2005/0023157	A1	2/2005	Logan
2005/0033686	A1	2/2005	Peart et al.
2005/0033687	A1	2/2005	Beenau et al.
2005/0033688	A1	2/2005	Peart et al.
2005/0033992	A1	2/2005	Inabe
2005/0035192	A1	2/2005	Bonalle et al.
2005/0035847	A1	2/2005	Bonalle et al.
2005/0036665	A1	2/2005	Higuchi
2005/0038718	A1	2/2005	Barnes et al.
2005/0040221	A1	2/2005	Schwarz, Jr.
2005/0040272	A1	2/2005	Argumedo et al.
2005/0045718	A1	3/2005	Bortolin et al.
2005/0054438	A1	3/2005	Rothschild et al.
2005/0058262	A1	3/2005	Timmins et al.
2005/0065842	A1	3/2005	Summers
2005/0065872	A1	3/2005	Moebs et al.
2005/0087597	A1	4/2005	Gotfried et al.
2005/0091325	A1	4/2005	Kuwana et al.
2005/0097038	A1	5/2005	Yu et al.
2005/0098621	A1	5/2005	deSylva
2005/0100199	A1	5/2005	Boshra
2005/0102524	A1	5/2005	Haala
2005/0103839	A1	5/2005	Hewel
2005/0113137	A1	5/2005	Rodriguez et al.
2005/0116024	A1	6/2005	Beenau et al.
2005/0121512	A1	6/2005	Wankmueller
2005/0122209	A1	6/2005	Black
2005/0123137	A1	6/2005	McCallum
2005/0125312	A1	6/2005	Dearing et al.
2005/0125343	A1	6/2005	Mendelovich
2005/0127164	A1	6/2005	Wankmueller
2005/0137977	A1	6/2005	Wankmueller
2005/0139669	A1	6/2005	Arnouse
2005/0149926	A1	7/2005	Saltz
2005/0160271	A9	7/2005	Brundage et al.
2005/0160790	A1	7/2005	Tanaka et al.
2005/0165684	A1	7/2005	Jensen et al.
2005/0166062	A1	7/2005	Sanchez-Cifuentes
2005/0169504	A1	8/2005	Black
2005/0171787	A1	8/2005	Zagami
2005/0171905	A1	8/2005	Wankmueller
2005/0180618	A1	8/2005	Black
2005/0187883	A1	8/2005	Bishop et al.
2005/0197923	A1	9/2005	Kilner et al.
2005/0207002	A1	9/2005	Liu et al.
2005/0211784	A1	9/2005	Justin
2005/0212657	A1	9/2005	Simon
2005/0216424	A1	9/2005	Gandre et al.
2005/0221853	A1	10/2005	Silvester
2005/0232471	A1	10/2005	Baer
2005/0240778	A1	10/2005	Saito
2005/0251688	A1	11/2005	Nanavati et al.
2005/0261972	A1	11/2005	Black
2005/0275505	A1	12/2005	Himmelstein
2006/0005022	A1	1/2006	Wakamori et al.
2006/0005042	A1	1/2006	Black
2006/0033609	A1	2/2006	Bridgelall
2006/0034492	A1	2/2006	Siegel et al.
2006/0066444	A1	3/2006	Steeves
2006/0071756	A1	4/2006	Steeves
2006/0080552	A1	4/2006	Lauper
2006/0104485	A1	5/2006	Miller et al.
2006/0158434	A1	7/2006	Zank et al.
2006/0173291	A1	8/2006	Glossop
2006/0173791	A1	8/2006	Mann et al.
2006/0177061	A1	8/2006	Orsini et al.
2006/0190419	A1	8/2006	Bunn et al.
2006/0202835	A1	9/2006	Thibault
2006/0229988	A1	10/2006	Oshima et al.
2007/0008131	A1	1/2007	Doan et al.
2007/0046468	A1	3/2007	Davis
2007/0057797	A1	3/2007	Waldner et al.
2007/0075841	A1	4/2007	Matlsev et al.

FOREIGN PATENT DOCUMENTS

CH	689680	8/1999
DE	2847756	5/1980
DE	4339460	11/1993
DE	29702538	4/1997
EP	0181770	5/1986
EP	0343829	11/1989
EP	0354817	2/1990
EP	0358525	3/1990
EP	0368570	5/1990
EP	0388090	9/1990
EP	0424726	10/1990
EP	0403134	12/1990
EP	0411602	2/1991
EP	0473998	3/1992
EP	0481388	4/1992

EP	0531605	3/1993
EP	0552047	7/1993
EP	0560318	9/1993
EP	0568185	11/1993
EP	0721850	7/1996
EP	0780839	6/1997
EP	0789316	8/1997
EP	0866420	9/1998
EP	0894620	2/1999
EP	0916519	5/1999
EP	0917120	5/1999
EP	0927945	7/1999
EP	0933717	8/1999
EP	0949595	10/1999
EP	0956818	11/1999
EP	0959440	11/1999
EP	0984404	3/2000
EP	1016947	7/2000
EP	1017030	7/2000
EP	1039403	9/2000
EP	1104909	6/2001
EP	1113387	7/2001
EP	1199684	4/2002
EP	1251450	10/2002
EP	1345146	9/2003
EP	0657297	10/2007
GB	1371254	10/1974
GB	2108906	5/1985
GB	2240948	8/1991
GB	2347537	9/2000
JP	62-043774	3/1987
JP	62-264999	11/1987
JP	63-071794	4/1988
JP	63-098689	4/1988
JP	63-072721	5/1988
JP	63-175987	7/1988
JP	64-004934	1/1989
JP	64-087395	3/1989
JP	64-087396	3/1989
JP	64-087397	3/1989
JP	02-130737	5/1990
JP	02-252149	10/1990
JP	03-290780	12/1991
JP	04-303692	10/1992
JP	05-069689	3/1993
JP	05-254283	10/1993
JP	06-183187	7/1994
JP	06-191137	7/1994
JP	06-234287	8/1994
JP	07-173358	7/1995
JP	07-205569	8/1995
JP	08-244385	9/1996
JP	08-324163	12/1996
JP	09-052240	2/1997
JP	09-274640	10/1997
JP	10-129161	5/1998
JP	10302160	11/1998
JP	11-227367	8/1999
JP	2000-11109	1/2000
JP	2000-15288	1/2000
JP	2000-40181	2/2000
JP	2000-67312	3/2000
JP	2000-177229	6/2000
JP	2000-207641	7/2000
JP	2001-5931	1/2001
JP	2001-504406	4/2001
JP	2001-283122	10/2001
JP	2001-315475	11/2001
JP	2002-274087	9/2002
JP	2003-288646	10/2003
JP	2004-164347	6/2004
JP	2004-348478	12/2004
WO	WO 81/00776	3/1981
WO	WO 89/03760	5/1989
WO	WO 90/08661	8/1990
WO	WO 92/16913	10/1992
WO	WO 95/32919	12/1995
WO	WO 95/35546	12/1995
WO	WO 96/06409	2/1996
WO	WO 96/18972	6/1996
WO	WO 97/40459	10/1997
WO	WO 98/21683	5/1998
WO	WO 98/45778	10/1998
WO	WO 99/03057	1/1999
WO	WO 99/12136	3/1999
WO	WO 99/14055	3/1999
WO	WO 99/21321	4/1999
WO	WO 99/27492	6/1999
WO	WO 99/40548	8/1999
WO	WO 99/47983	9/1999
WO	WO 00/10144	2/2000
WO	WO 00/38088	6/2000
WO	WO 01/04825	1/2001
WO	WO 01/15098	3/2001
WO	WO 01/43095	6/2001
WO	WO 01/55955	8/2001
WO	WO 01/72224	10/2001
WO	WO 01/77856	10/2001
WO	WO 01/80473	10/2001
WO	WO 01/86535	11/2001
WO	WO 01/90962	11/2001
WO	WO 01/95243	12/2001
WO	WO 02/01485	1/2002
WO	WO 02/13134	2/2002
WO	WO 02/21903	3/2002
WO	WO 02/063545	8/2002
WO	WO 02/065246	8/2002
WO	WO 02/065404	8/2002
WO	WO 02/069221	9/2002
WO	WO 02/073512	9/2002
WO	WO 02/086665	10/2002
WO	WO 02/091281	11/2002
WO	WO 02/097575	12/2002
WO	WO 02/101670	12/2002
WO	WO 03/007623	1/2003

OTHER PUBLICATIONS

"Physical Reality: A Second Look", Ken Sharp, Senior Technical Editor, http://www.idsystems.com/reader/1999_03/phys0399_pt2/phys0399_pt2.htm (6 pages).

"'Magic Wands' to Speed Mobile Sales", BobBrewin, Jan. 15, 2001, http://www.computerworld.com/mobiletopics/mobile/story/1,10801,563300.html (4 pages).

"Mobile Speedpass Goes Global as Mobil Singapore Rolls Out Asia's First RFID-Based Pay-At-The-Pump System", Press Release, Apr. 5, 1999, http://www.ti.com/tiris/docs/news_releases/rel12.htm (3 pages).

"Speedpass Unleashed", Jun. 4, 2002 http://www.cardweb.com/cardtrak/news/cf2_20a_97.html (2 pages).

Prophecy Central Update #9, Oct. 10, 1997, http://www.bible-prophecy.com/pcu9.htm (5 pages).

International Newsletter of the TI RFID Group, Issue 20, 2000 (12 pages).

"CES: Microsoft's SPOT Technology has Humble Origins", by James Niccolai, Jan. 10, 2003, http://archive.inforworld.com/articles/hn/xml/03/01/10/030110hnspot.xml?s=IDGNS (3 pages).

"Microsoft: See SPOT Run On Your Wrist", by Richard Shim, Jun. 5, 2003, http://news.com.com/2100-1041_3-1013442.html?tag=fd_top (1 page).

"Networking: Microsoft SPOT", by Jeremy A. Kaplan, Jul. 1, 2003, http://www.pcmag.com/print_article/0,3048,a=43561,00.asp (2 pages).

"Microsoft Launches Smart Personal Object Technology Initiative", Press Release from COMDEX Fall 2002, Nov. 17, 2002, http://www.Microsoft.com/presspass/features/2002/nov02/11-17SPOT.asp (4 pages).
"Bank Extends RFID Payment Pilot: Bank of America will continue to test its QuickWave RFID payment card for another three months", RFID Journal, Jan. 23, 2003.
"MasterCard to Test RFID Card: Pilot will test whether consumers, merchants and credit card issuers value "contactless" payments", RFID Journal, Dec. 20, 2002.
"Vendors Target Amusement Parks: Protecting children and enabling cashless payments make RFID an appealing option for the entertainment industry", RFID Journal, Nov. 27, 2002.
"Inside's Next-Gen Smart Card: The French company plans to introduce an RFID card that uses a 16-bit microprocessor and new encryption technology", RFID Journal, Oct. 29, 2002.
"Sony, Philips Creating RFID Link: Consumer electronics giants are jointly developing a new RFID standard for payments and for communication between devices", RFID Journal, Sep. 17, 2002.
"Japan Gets Digital Ticket System: A national ticket seller and phone company are teaming up to create an electronic ticket", RFID Journal, Aug. 31, 2002.
"Security for Wireless Java: NTRU, a startup that offers security software, has released of Java version of its NTRU encryption algorithm", RFID Journal, Jun. 27, 2002.
"Making RFID Payments Ubiquitous: Philips and Visa want people to be able to pay for goods and services anywhere by using RFID chips embedded in the phones and other devices", RFID Journal, Jun. 2, 2003.
"RFID Smart Cards Gain Ground: The convenience of contactless transactions is driving widespread adoption of contactless smart cards", RFID Journal, Apr. 9, 2003.
"TI Embraces Prox Card Standard: Texas Instruments ISO 14443 payment platform promises faster data transfer rates and more security", RFID Journal, Mar. 6, 2003.
"Multiple Frequency Transponders: Volume production of dual-band RFID chips begins", Frontline Solutions, Jul. 16, 2003.
Functional Specification, Standard Card IC MF1 IC S50, Philips Semiconductors, Product Specification Rev. 5.1 May 2001.
http://www.semiconductors.phillips.com/news/content/file_878.html, Apr. 7, 2003.
http://www.palowireless.com/infotooth/whatis.asp, Apr. 28, 2003.
http://www.palowireless.com/infotooth/tutorial.asp, Apr. 28, 2003.
http://www.palowireless.com/infotooth/tutorial/profiles.asp, Apr. 28, 2003.
http://www.palowireless.com/infotooth/tutorial/radio.asp, Apr. 28, 2003.
http://www.polowireless.com/infotooth/tutorial/baseband.asp, Apr. 28, 2003.
http://www.palowireless.com/infotooth/tutorial/lmp.asp, Apr. 28, 2003.
http://www.palowireless.com/infotooth/tutorial/hci.asp, Apr. 28, 2003.
http://www.palowireless.com/infotooth/tutorial/12cap.asp, Apr. 28, 2003.
http://www.palowireless.com/infotooth/tutorial/rfcomm.asp, Apr. 28, 2003.
http://www.palowireless.com/infotooth/tutorial/sdp.asp, Apr. 28, 2003.
http://www.palowireless.com/infotooth/tutorialk1_gap.asp, Apr. 28, 2003.
"Sony, Phillips to Test RFID Platform", RFID Journal, May 8, 2003.
USBanker, Article 5, 1995, http://www.banking.com/us-banker/art5.
Financial Technology International Bulletin, V14, n1, p. 4, Sep. 1996.
Green, Thomas C., "American Express Offers temporary CC numbers for the web," Sep. 9, 2000, The Register, www.theregister.c.uk/c.
CNN.com, U.S. News, "American Express to offer disposable credit card numbers," Sep. 8, 2000, Associated Press, www.cnn.c.
American Express, "Private PaymentsSM ; A New Level of Security from American Express," American Express Website, Cards.
Martin, Zack, "One-Time Numbers Stop Web Hackers From Pilfering Data," Jan. 2001, Card Marketing, Thomson Financial, www.c rdf rum.c.
The Dollar Stretcher, "Disposable Credit Card Numbers," Jan. 2001, CardRatings.org, www.stretcher.c.
"Biometrics: Speaker Verification", by Kulkami, et al., http://biometrics.cse.msu.edu/speaker.html, Mar. 8, 2004, 5 pages.
"Judge Dismisses FTC Suit Against Rambus", Evers, IDG New Service, http://www.infoworld.com/article/04/02/18/HNjudgedismisses_1.html, Feb. 18, 2004, 3 pages.
"Credit on Your Key Ring, Buy Gas at Mobil, Exxon and Soon Burgers at McDonald's", by Krakow, MSNBC, http://www.msnbc.msn.com/id/3072638, Feb. 17, 2004, 4 pages.
"The Evolution of Mobile Payment", by McPherson, Financial Insights, Feb. 2, 2004, http://www.banktech.com./story/mews/showArticle/jhtml?article ID=17601432, 2 pages.
"RFID Take Priority With Wal-Mart", by DocMemory, http://www.simmtester.com/page/news/shownews.asp?num=6550, Feb. 9, 2004, 2 pages.
"Microsoft, IBM and Phillips Test RFID Technology", by Rohde, IDG New Service, http:www.computerweekly.com/Article127889.htm, Feb. 9, 2004, 3 pages.
"Pay By Touch Press Releases", http://www.paybytouch.com/press.html, Feb. 10, 2004, 3 pages.
"PowerPay RFID Payment and Marketing Solution Speeds Purchases at Seahawks Stadium with Technology from Texas Instruments", http://www.powerpayit.com/news/Seahawks_pr.html, Feb. 9, 2004, 2 pages.
"Putting Their Finger on It", by Wilson, http://sanfrancisco.bizjournals.com/sanfrancisco/stories/2003/10/20/story6.html?t=printable, Feb. 9, 2004, 2 pages.
"TI Embraces Prox Card Standard", by Roberti, Mar. 6, 2003, http://www.ti.com/tiris/docs/in-the-news/2003/3-6-03.shtml, 2 pages.
"Paying It By Ear", The Guardian, Jan. 18, 2003, http://money.guardian.co.uk/creditanddebt/creditcards/story/0,1456,876908,00.html, 3 pages.
Pay By Touch—Company, http://www.paybytouch.com/company.html.
"Identix Inc.—Empowering Identification™—Understanding Biometrics", http://www.identix.com/newsroom/news_biometrics_face.html, 1 page.
"International Biometric Group—Signature Biometrics: How It Works", http://www.ibgweb.com/reports/public/reports/signature-scan_tech.html, Feb. 18, 2004, 1 page.
"International Biometric Group—Voice Recognition Technology: How It Works", http://www.ibgweb.com/reports/public/reports/voice-scan_tech.html, Feb. 18, 2004, 1 page.
"The Henry Classification System", International Biometric Group, 7 pages.
"Individual Biometrics—Hand Geometry", http://ctl.ncsc.dni.us/biomet%20web/BMHand.html, Feb. 18 2004, 2 pages.
"Individual Biometrics—Retinal Scan", http:ctl.ncsc.dni.us/biomet%20web/BMRetinal.html, Feb. 18, 2004, 2 pages.
"Individual Biometrics—Iris Scan", http:ctl.ncsc.dni.us/biomet%20web/BMIris.html, Feb. 18, 2004, 2 pages.
"Individual Biometrics—Vascular Patterns", http:ctl.ncsc.dni.us/biomet%20web/BMVascular.html, Feb. 18, 2004, 1 page.
"Individual Biometrics—Fingerprint", http:ctl.ncsc.dni.us/biomet%20web/BMFingerprint.html, Feb. 18, 2004, 3 pages.
"Fingerprint Technology—Indentix Inc.—Empowering Identification™—Understanding Biometrics", http://www.identix.com/newsroom/news_biometrics_finger.html, Feb. 18, 2004, 1 page.
"Individual Biometrics—Facial Recognition", http:ctl.ncsc.dni.us/biomet%20web/BMfacial.html, Feb. 18, 2004, 2 pages.
"Fingerprint Analysis—The Basics", http://www.crimtrac.gov.au/fingerprintanalysis.htm, Feb. 18, 2004, 3 pages.
"Visual Speech and Speaker Recognition", by Luettin, Jun. 30, 2000, http://herens.idiap.ch/~luettin/luettin-thesis.bib.abs.html, 1 page.
"Automatic Ear Recognition by Force Field Transformations", by Hurley, et al., The Institution of Electrical Engineers, 2000, pp. 7/1-7/5.

"Everything You Need to Know About Biometrics", by Bowman, Identix Croproation, Jan. 2000, 8 pages.
"How Fingerprint Scanners Work", by Harris, http:computer.howstuffworks.com/fingerprint-scanner.htm/printable, Feb. 18, 2004, 6 pages.
"How Facial Recognition Systems Work", by Bonsor, http://computer.howstuffworks.com/facial-recognition.htm/printable, Feb. 18, 2004, 6 pages.
"Biometrics: Hand Geometry", by Ross, et al., http://biometrics.cse.msu.edu/hand_geometry.html, Feb. 26, 2004, 2 pages.
"Biometric Person Authentication: Odor", by Korotkaya, Department of Information Technology, Laboratory of Applied Mathematics, Lappeenranta University of Technology, 18 pages.
"ISO Magnetic Stripe Card Standards", http://www.cyberd.co.uk/support./technotes/ioscards.htm, Feb. 9, 2004, 4 pages.
"Smart Card Developer's Kit: Some Basic Standards for Smart Cards", http:unix.be.eu.org/docs/smart-card-developer-kit/ch03/033-035.html, Feb. 9, 2004, 2 pages.
"Smart Card Technology and Applications"; http://disc.cba.uh.edu/~rhirsch/fall96/lara.htm (8 pages).
Goldman, J., "Internet Security, The Next Generation, When Software Encryption is not Enough," Web Techniques, Nov. 1997, pp. 43-46.
Simmons, J., "Smart Cards Hold the Key to Secure Internet Commerce," EC World, Dec. 1998, pp. 36-38.
Wayner, P., "Digital Cash," AP Professional, 1996, pp. 76-83, 85-100.
"ISO Standards," available from http://www.iso.ch/projects/loading.html.
Turban, et al., "Using Smartcards in Electronic Commerce," Proc. 31st Annual Hawaii Inter. Conf. on System Sciences, vol. 4, 1998, pp. 62-69.
Dhem, et al., "SCALPS: Smart Card for Limited Payment Systems," IEEE Micro, Jun. 1996, pp. 42-51.
Smith, M.T., "Smart Cards: Integrating for Portable Complexity," Computer-Integrated Engineering, Aug. 1998, pp. 110-115.
Geer, et al., "Token-Mediated Certification and Electronic Commerce," Proc. 2nd USENIX Workshop on Electronic Commerce, Nov. 18-21, 1996, pp. 13-22.
Gobioff, et al., "Smart Cards in Hostile Environments," Proc. 2nd USENIX Workshop in Electronic Commerce, Nov. 18-21, 1996, pp. 23-28.
Fancher, C.H., "In Your Pocket Smartcards," IEEE Spectrum, Feb. 1997, pp. 47-53.
Blythe, I., "Smarter, More Secure Smartcards," BYTE, Jun. 1997, pp. 63-64.
Leach, Dr. J., "Dynamic Authentication for Smartcards," Computers and Security, vol. 14, No. 5, 1995, pp. 385-389.
Wu, et al., "Authenticating Passwords Over an Insecure Channel," Computers and Security, vol. 15, No. 5, 1996, pp. 431-439.
Manninger, et al., "Adapting an Electronic Purse for Internet Payments," ACISP '98 Proceedings, Jul. 13-15, 1998, pp. 205-214.
Yan, et al., "Banking on the Internet and Its Applications," Proc. 13th Annual Hawaii International Conference on System Sciences, vol. 4, 1997, pp. 275-284.
Transport Layer Security Working Group, "The SSL Protocol, Version 3.0," Nov. 18, 1996 (also available at http://home.netscape.com/eng/ssl3/draft302.txt).
Business Wire (press release), "Master Card E-Wallet," Jul. 11, 2000.
Obongo.com Website, "Obongo," Aug. 8, 2000 (Description of wallet toolbar also available at http://www.obongo. com/chabi/website/index.htm).
PR Newswire (press release), "Providian Launches Nation's First Clear Chip Card," Sep. 12, 2000. The press release may be related to the art of the invention, but based upon the information in the press release, it is unclear if the press release is prior art. However, in an abundance of caution the Applicant desires to put the press release into the file wrapper.

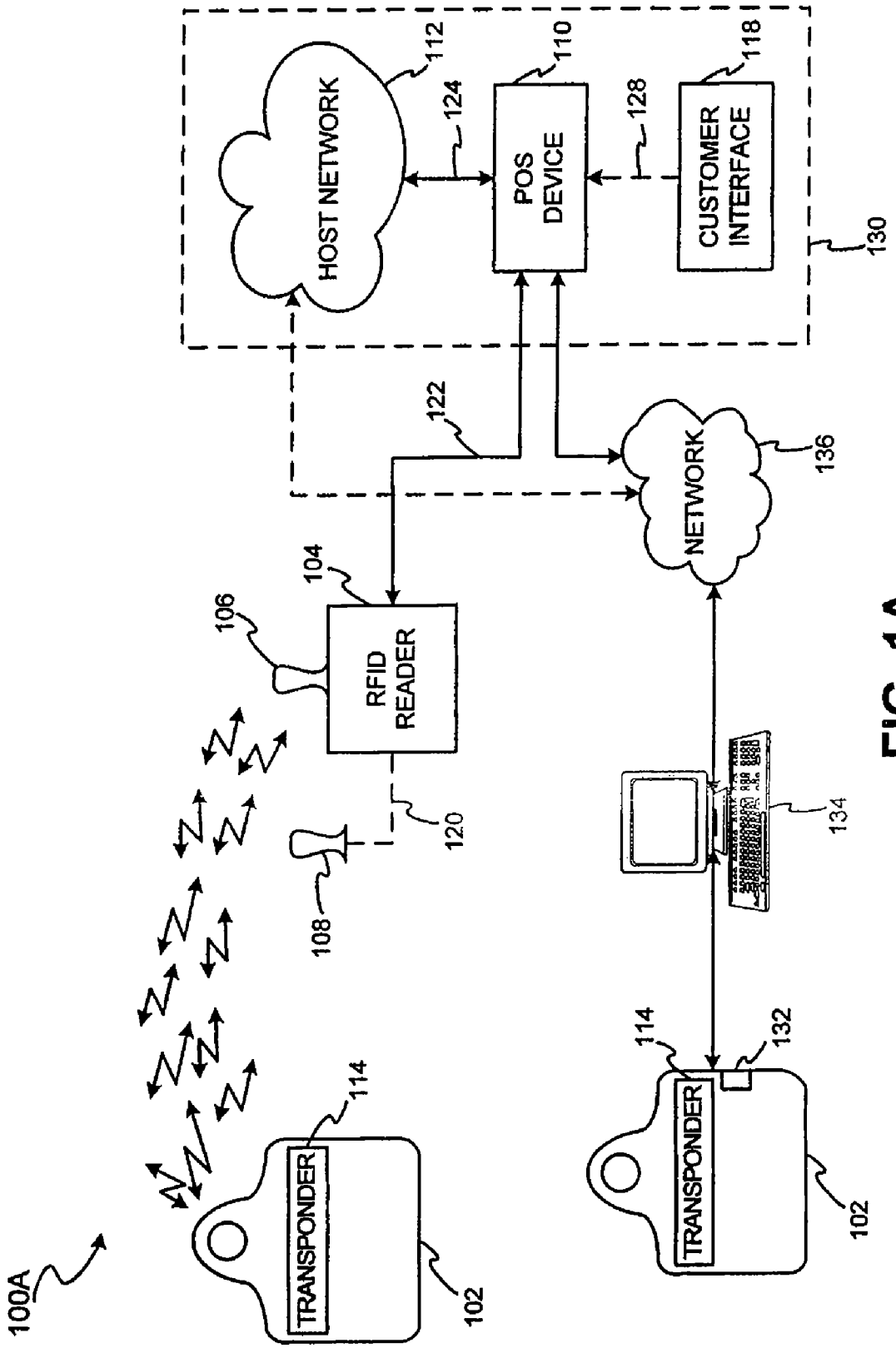
HOST NETWORK
112
124
POS DEVICE
110
128
CUSTOMER INTERFACE
118
130
122
NETWORK
136
104
106
RFID READER
120
108
134
114
TRANSPONDER
102
114
132
TRANSPONDER
102
100A

FIG. 1A

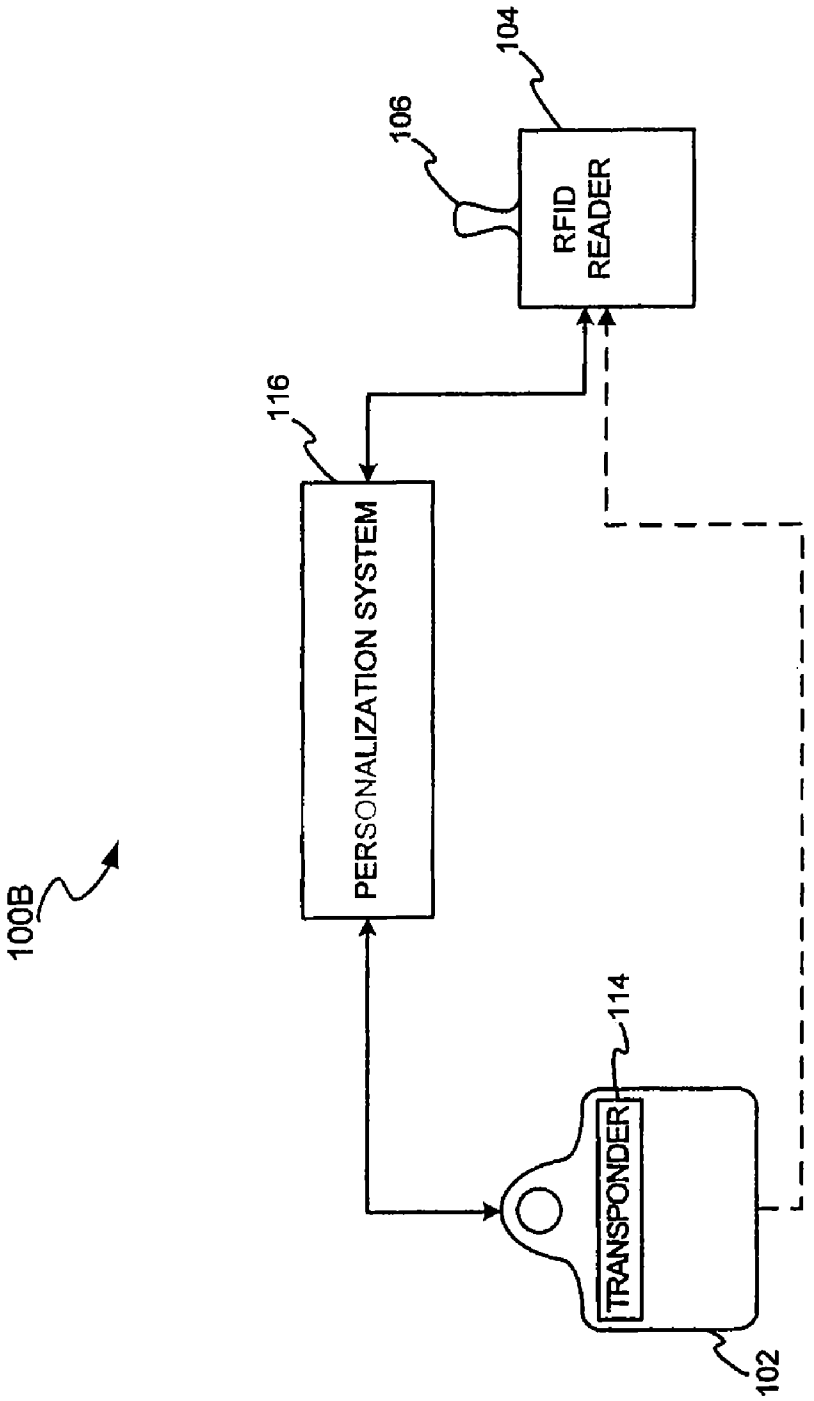
100B
PERSONALIZATION SYSTEM
116
RFID READER
106
104
TRANSPONDER
114
102

FIG. 1B

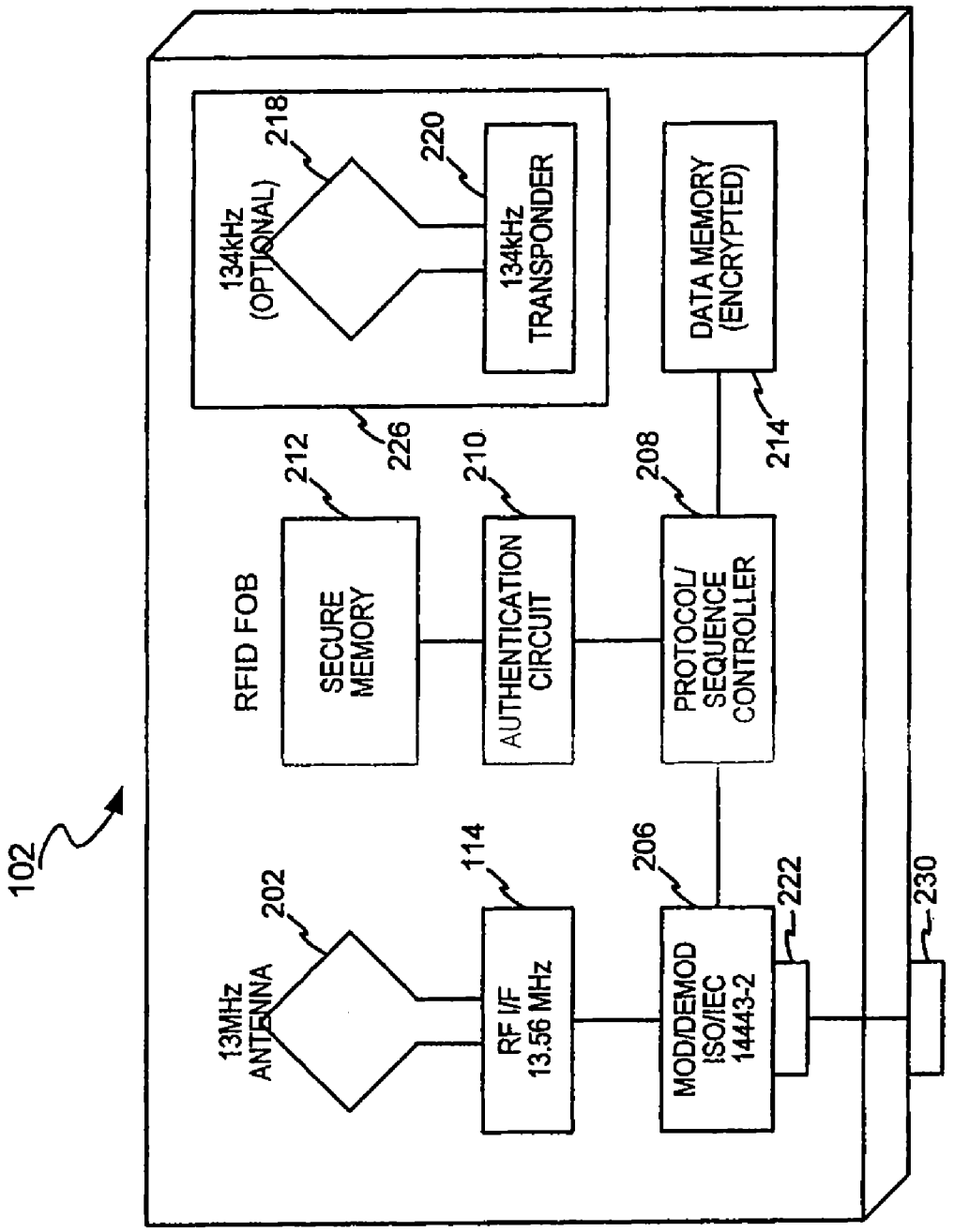
102
RFID FOB
13MHz ANTENNA
202
RF I/F 13.56 MHz
114
MOD/DEMOD ISO/IEC 14443-2
206
222
230
SECURE MEMORY
212
AUTHENTICATION CIRCUIT
210
PROTOCOL/ SEQUENCE CONTROLLER
208
134kHz (OPTIONAL)
218
134kHz TRANSPONDER
220
226
DATA MEMORY (ENCRYPTED)
214

FIG. 2

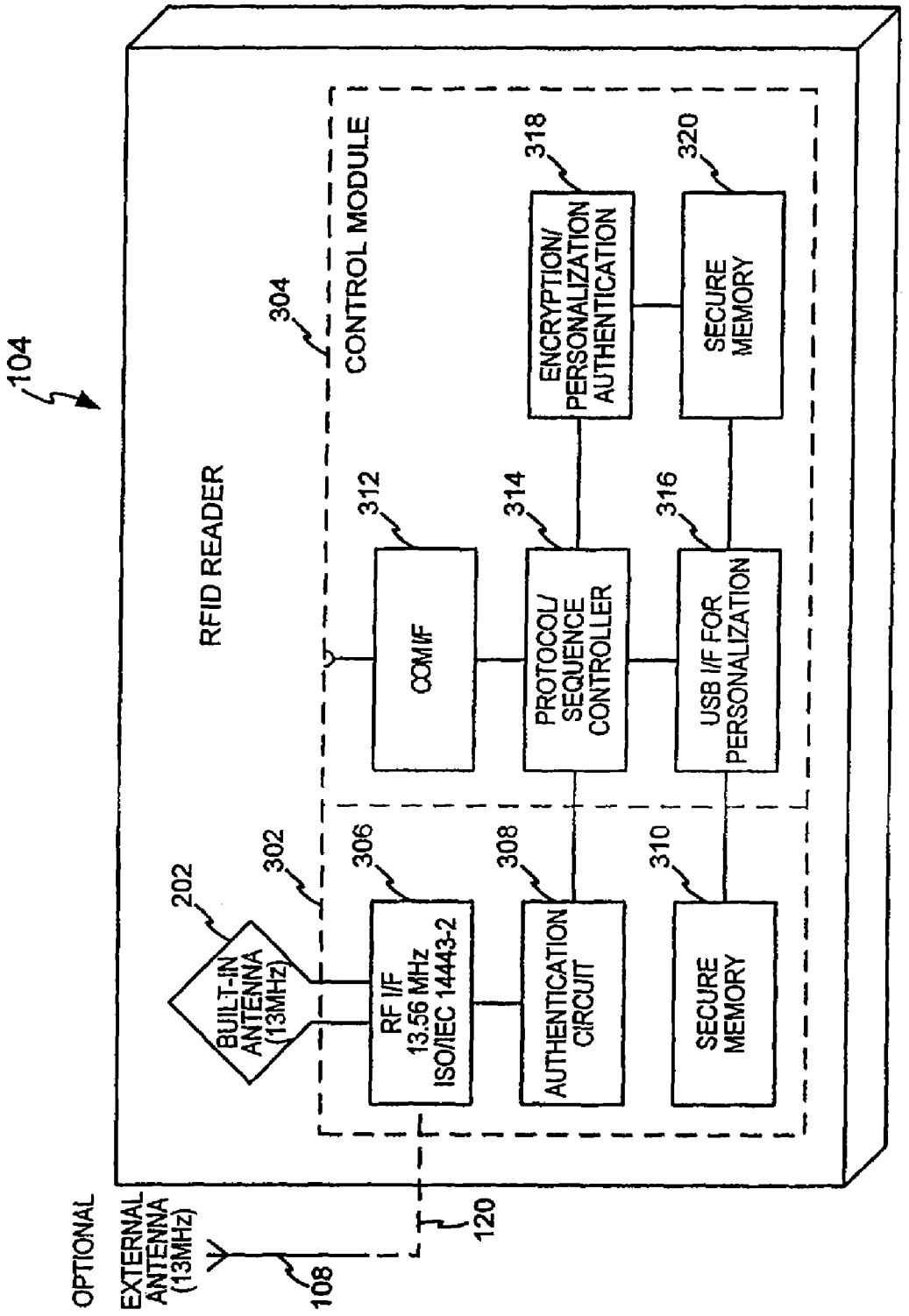
104
RFID READER
304
CONTROL MODULE
318
ENCRYPTION/
PERSONALIZATION
AUTHENTICATION
320
SECURE
MEMORY
312
COM I/F
314
PROTOCOL/
SEQUENCE
CONTROLLER
316
USB I/F FOR
PERSONALIZATION
202
BUILT-IN
ANTENNA
(13MHz)
302
306
RF I/F
13.56 MHz
ISO/IEC 14443-2
308
AUTHENTICATION
CIRCUIT
310
SECURE
MEMORY
OPTIONAL
EXTERNAL
ANTENNA
(13MHz)
108
120

FIG. 3

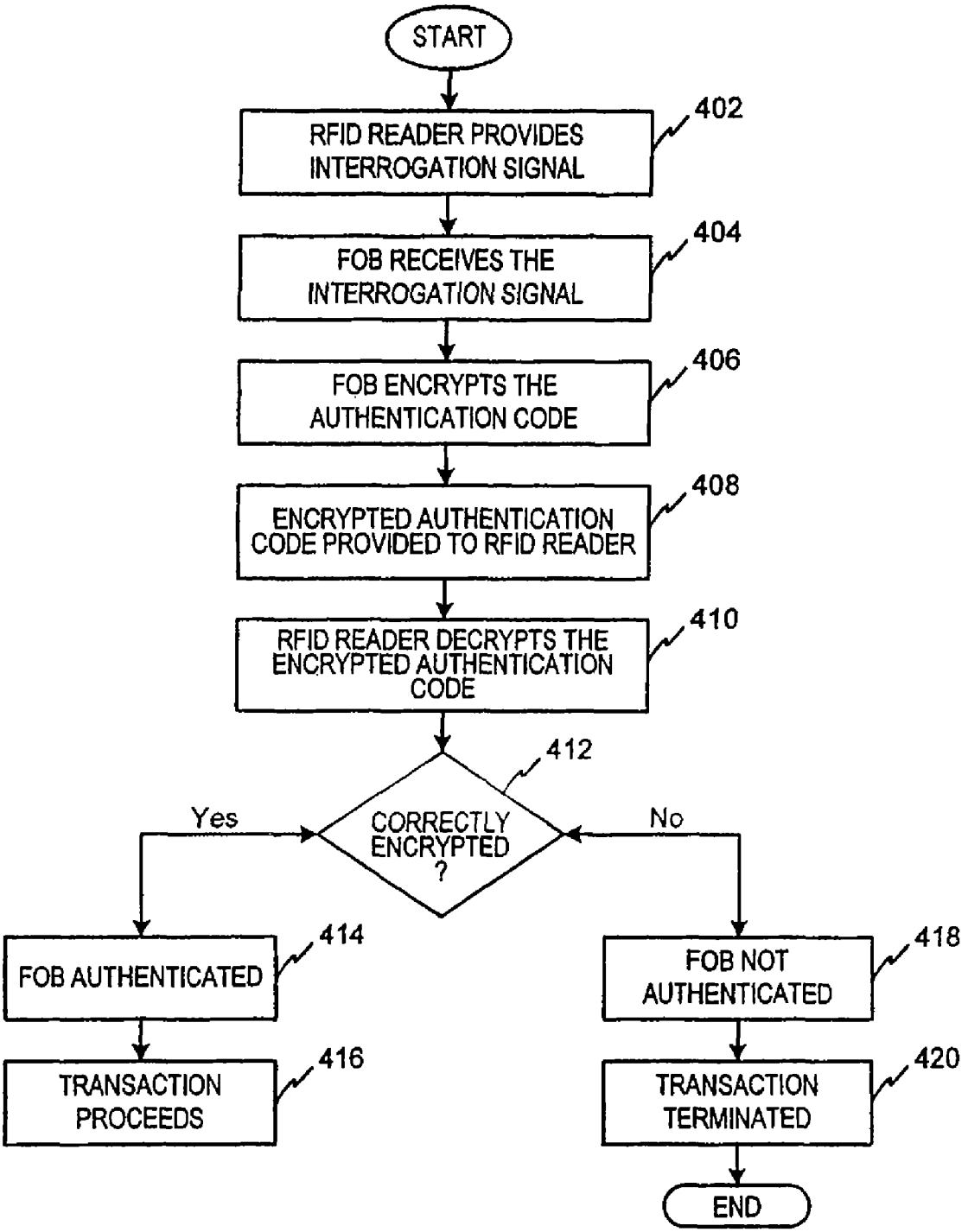
START
RFID READER PROVIDES INTERROGATION SIGNAL
402
FOB RECEIVES THE INTERROGATION SIGNAL
404
FOB ENCRYPTS THE AUTHENTICATION CODE
406
ENCRYPTED AUTHENTICATION CODE PROVIDED TO RFID READER
408
RFID READER DECRYPTS THE ENCRYPTED AUTHENTICATION CODE
410
412
CORRECTLY ENCRYPTED ?
Yes
No
FOB AUTHENTICATED
414
TRANSACTION PROCEEDS
416
FOB NOT AUTHENTICATED
418
TRANSACTION TERMINATED
420
END

FIG. 4

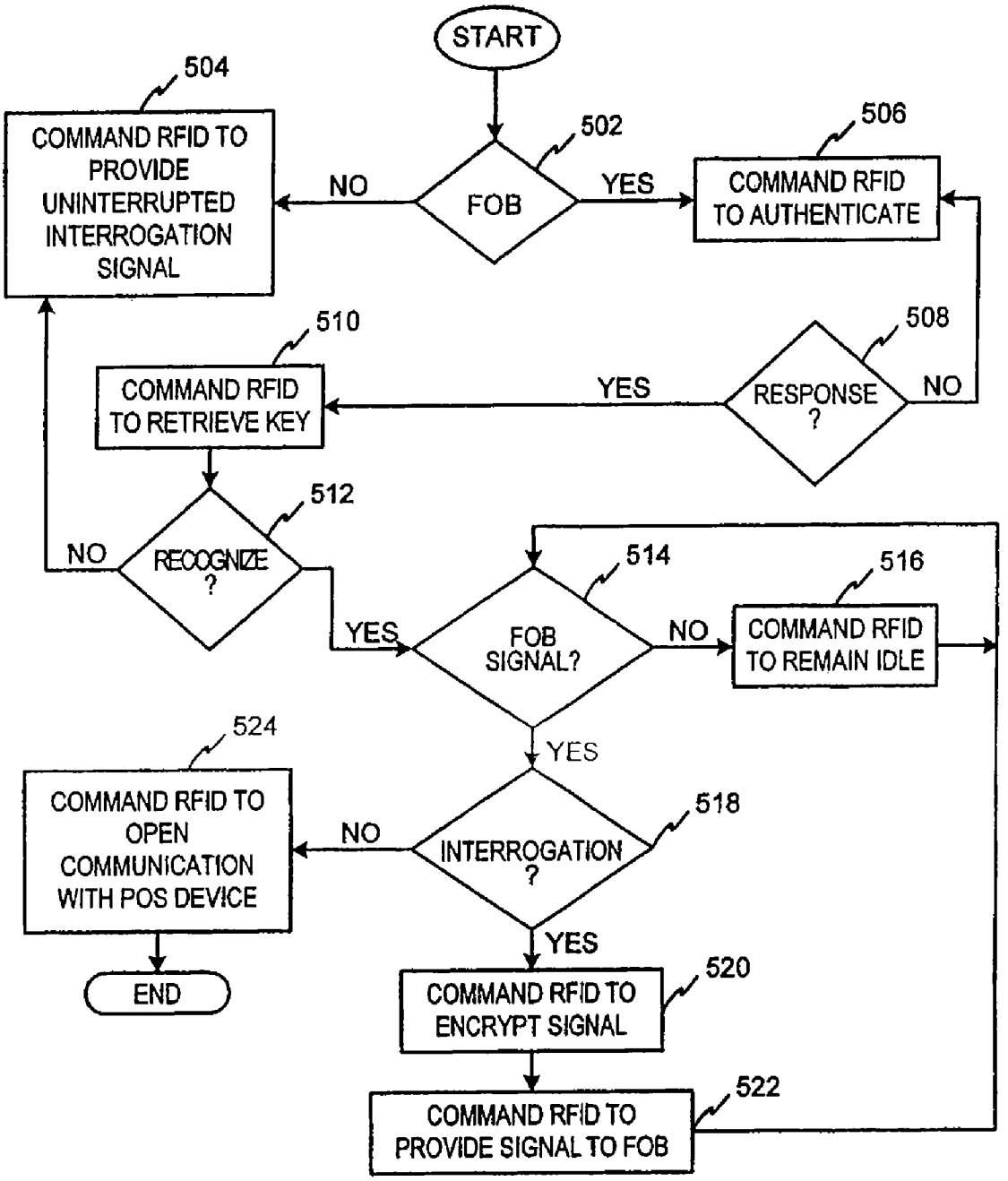
START
502
FOB
NO
YES
504
COMMAND RFID TO PROVIDE UNINTERRUPTED INTERROGATION SIGNAL
506
COMMAND RFID TO AUTHENTICATE
508
RESPONSE ?
YES
NO
510
COMMAND RFID TO RETRIEVE KEY
512
RECOGNIZE ?
NO
YES
514
FOB SIGNAL?
NO
516
COMMAND RFID TO REMAIN IDLE
YES
518
INTERROGATION ?
NO
524
COMMAND RFID TO OPEN COMMUNICATION WITH POS DEVICE
END
YES
520
COMMAND RFID TO ENCRYPT SIGNAL
522
COMMAND RFID TO PROVIDE SIGNAL TO FOB

FIG. 5

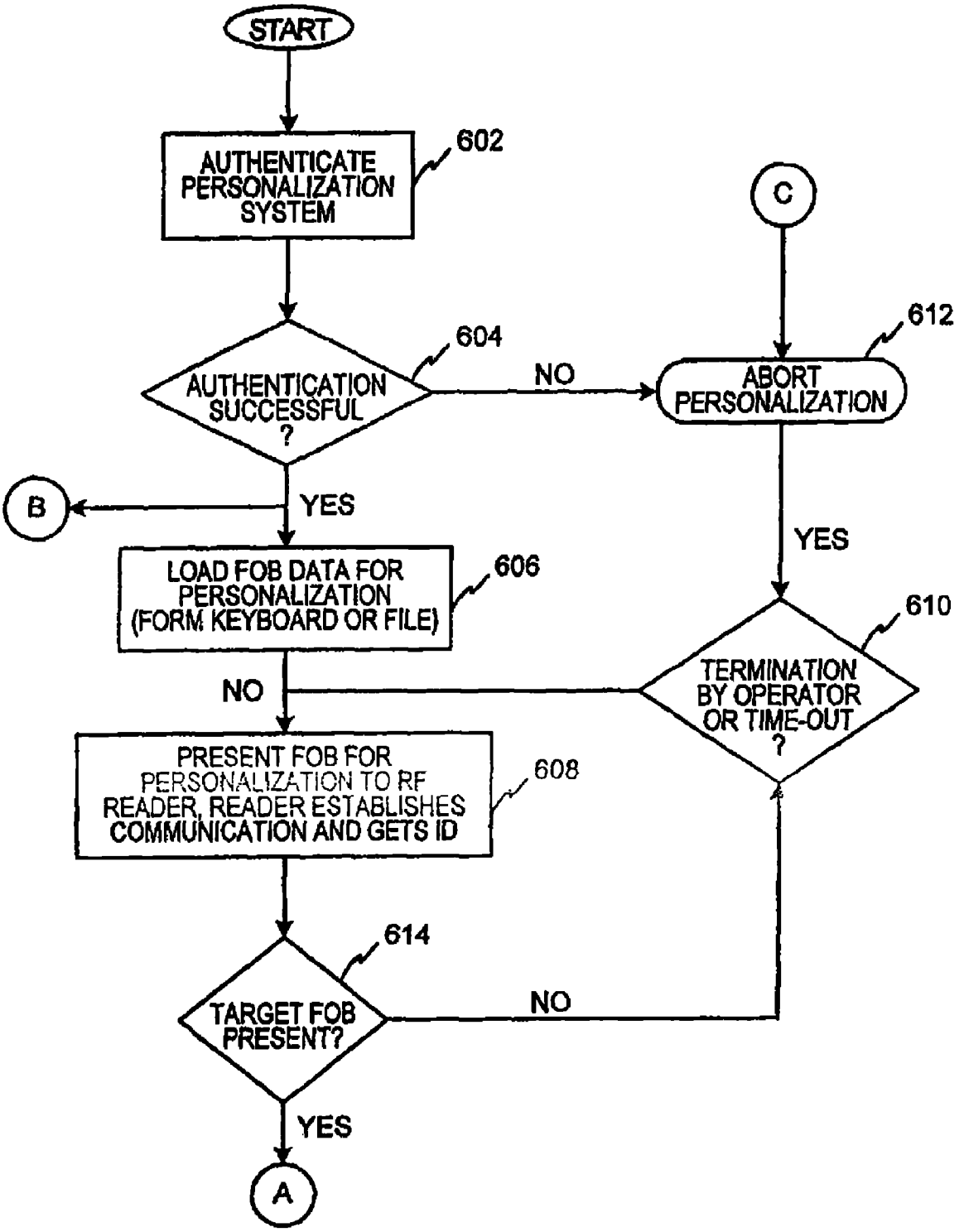
START
AUTHENTICATE PERSONALIZATION SYSTEM
602
C
612
604
AUTHENTICATION SUCCESSFUL ?
NO
ABORT PERSONALIZATION
B
YES
YES
LOAD FOB DATA FOR PERSONALIZATION (FORM KEYBOARD OR FILE)
606
610
TERMINATION BY OPERATOR OR TIME-OUT ?
NO
PRESENT FOB FOR PERSONALIZATION TO RF READER, READER ESTABLISHES COMMUNICATION AND GETS ID
608
614
TARGET FOB PRESENT?
NO
YES
A

FIG. 6A

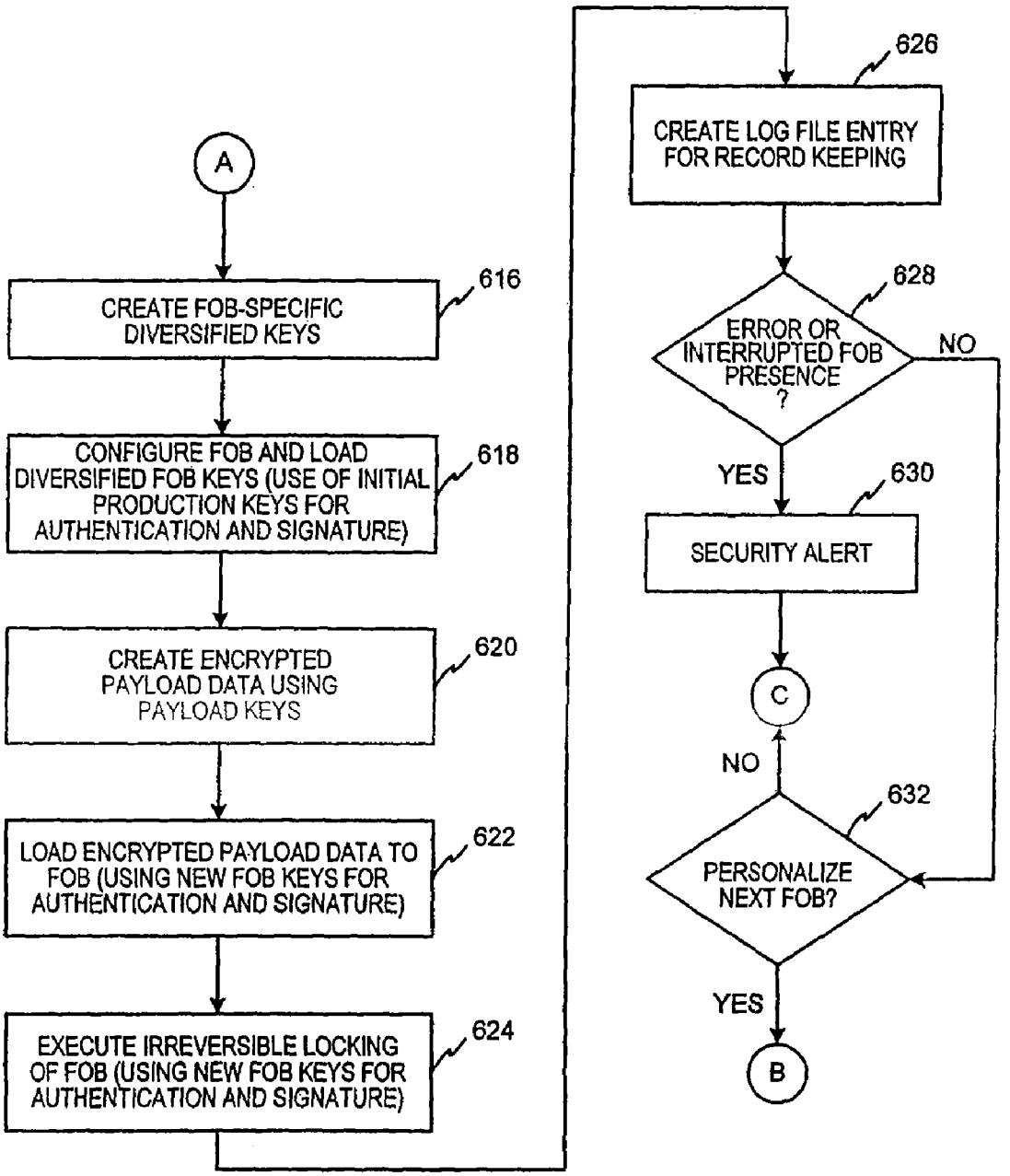
A
CREATE FOB-SPECIFIC DIVERSIFIED KEYS
616
CONFIGURE FOB AND LOAD DIVERSIFIED FOB KEYS (USE OF INITIAL PRODUCTION KEYS FOR AUTHENTICATION AND SIGNATURE)
618
CREATE ENCRYPTED PAYLOAD DATA USING PAYLOAD KEYS
620
LOAD ENCRYPTED PAYLOAD DATA TO FOB (USING NEW FOB KEYS FOR AUTHENTICATION AND SIGNATURE)
622
EXECUTE IRREVERSIBLE LOCKING OF FOB (USING NEW FOB KEYS FOR AUTHENTICATION AND SIGNATURE)
624
CREATE LOG FILE ENTRY FOR RECORD KEEPING
626
ERROR OR INTERRUPTED FOB PRESENCE ?
628
NO
YES
SECURITY ALERT
630
C
NO
PERSONALIZE NEXT FOB?
632
YES
B

FIG. 6B

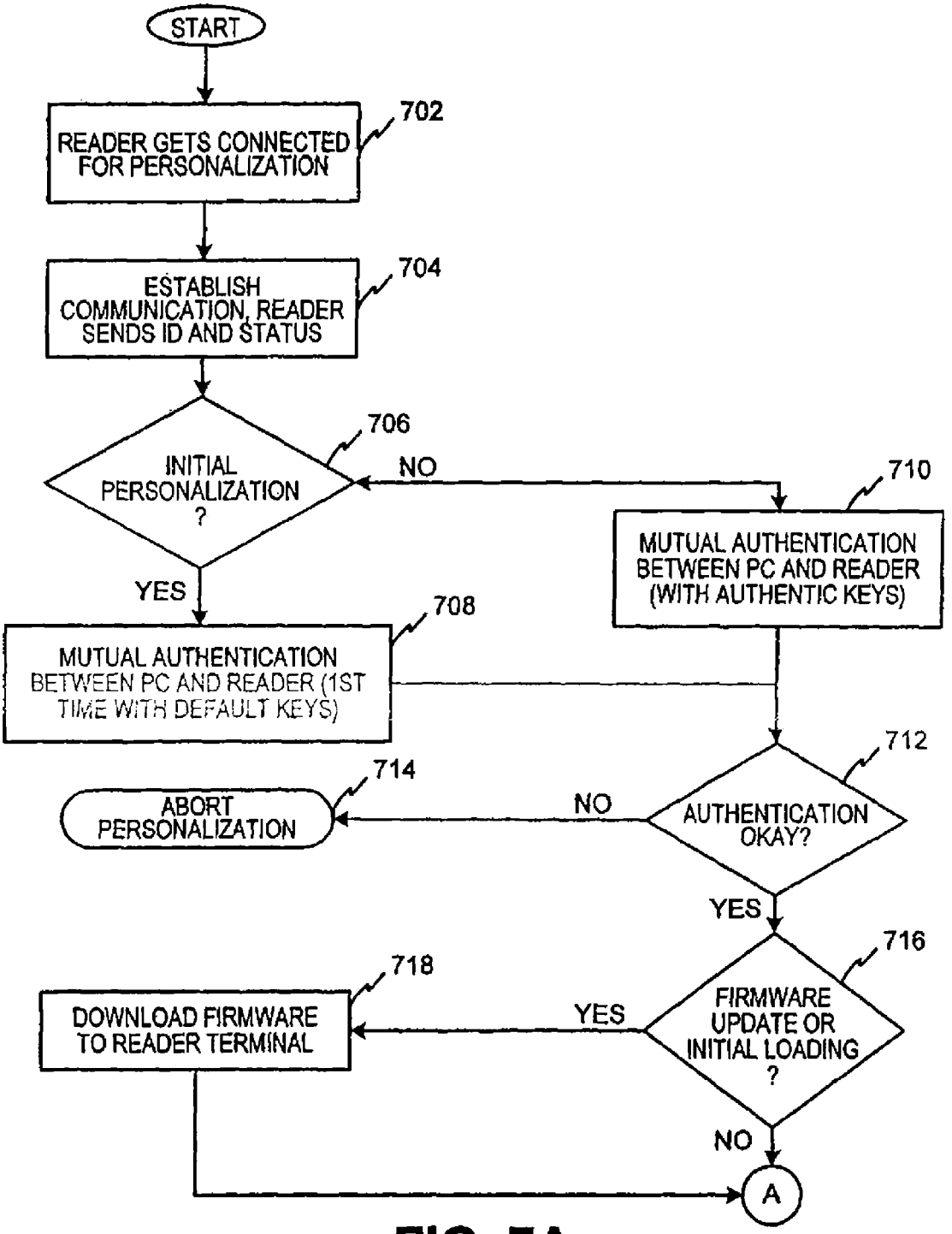
START
READER GETS CONNECTED FOR PERSONALIZATION
702
ESTABLISH COMMUNICATION, READER SENDS ID AND STATUS
704
INITIAL PERSONALIZATION ?
706
NO
YES
MUTUAL AUTHENTICATION BETWEEN PC AND READER (WITH AUTHENTIC KEYS)
710
MUTUAL AUTHENTICATION BETWEEN PC AND READER (1ST TIME WITH DEFAULT KEYS)
708
AUTHENTICATION OKAY?
712
NO
ABORT PERSONALIZATION
714
YES
FIRMWARE UPDATE OR INITIAL LOADING ?
716
YES
DOWNLOAD FIRMWARE TO READER TERMINAL
718
NO
A

FIG. 7A

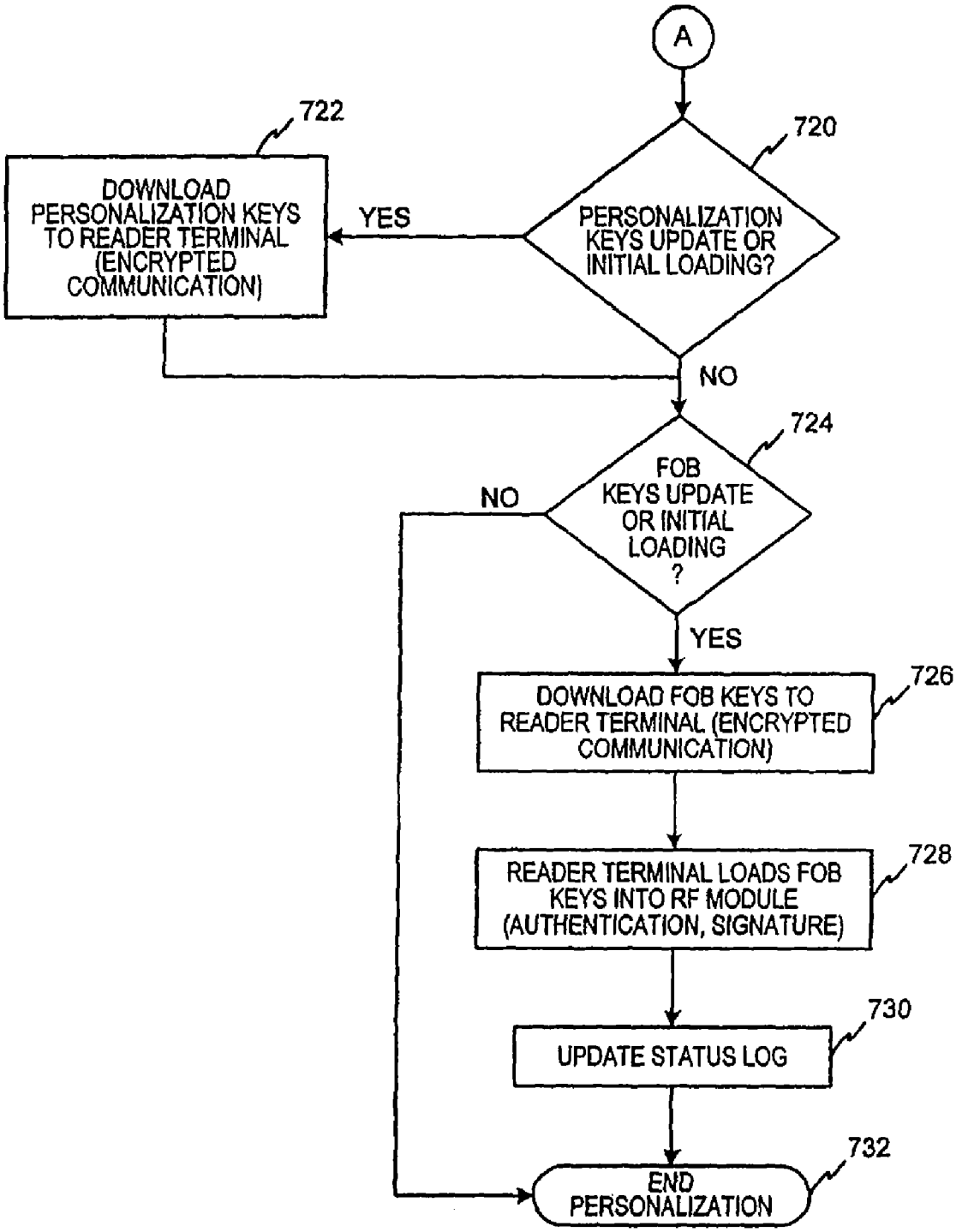
A
720
PERSONALIZATION KEYS UPDATE OR INITIAL LOADING?
YES
722
DOWNLOAD PERSONALIZATION KEYS TO READER TERMINAL (ENCRYPTED COMMUNICATION)
NO
724
FOB KEYS UPDATE OR INITIAL LOADING ?
NO
YES
726
DOWNLOAD FOB KEYS TO READER TERMINAL (ENCRYPTED COMMUNICATION)
728
READER TERMINAL LOADS FOB KEYS INTO RF MODULE (AUTHENTICATION, SIGNATURE)
730
UPDATE STATUS LOG
732
END PERSONALIZATION

FIG. 7B

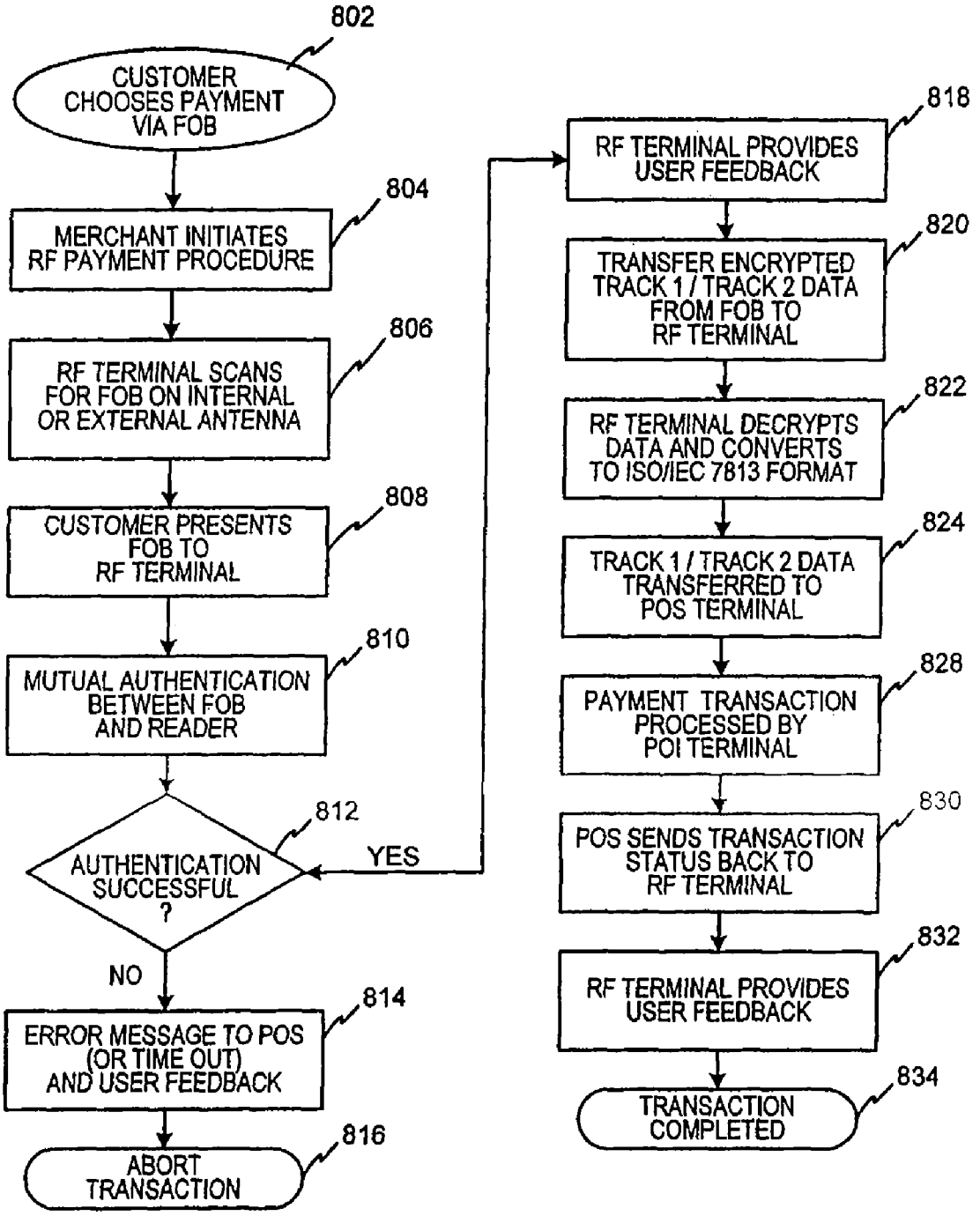
802
CUSTOMER CHOOSES PAYMENT VIA FOB
804
MERCHANT INITIATES RF PAYMENT PROCEDURE
806
RF TERMINAL SCANS FOR FOB ON INTERNAL OR EXTERNAL ANTENNA
808
CUSTOMER PRESENTS FOB TO RF TERMINAL
810
MUTUAL AUTHENTICATION BETWEEN FOB AND READER
812
AUTHENTICATION SUCCESSFUL ?
YES
NO
814
ERROR MESSAGE TO POS (OR TIME OUT) AND USER FEEDBACK
816
ABORT TRANSACTION
818
RF TERMINAL PROVIDES USER FEEDBACK
820
TRANSFER ENCRYPTED TRACK 1 / TRACK 2 DATA FROM FOB TO RF TERMINAL
822
RF TERMINAL DECRYPTS DATA AND CONVERTS TO ISO/IEC 7813 FORMAT
824
TRACK 1 / TRACK 2 DATA TRANSFERRED TO POS TERMINAL
828
PAYMENT TRANSACTION PROCESSED BY POI TERMINAL
830
POS SENDS TRANSACTION STATUS BACK TO RF TERMINAL
832
RF TERMINAL PROVIDES USER FEEDBACK
834
TRANSACTION COMPLETED

FIG. 8

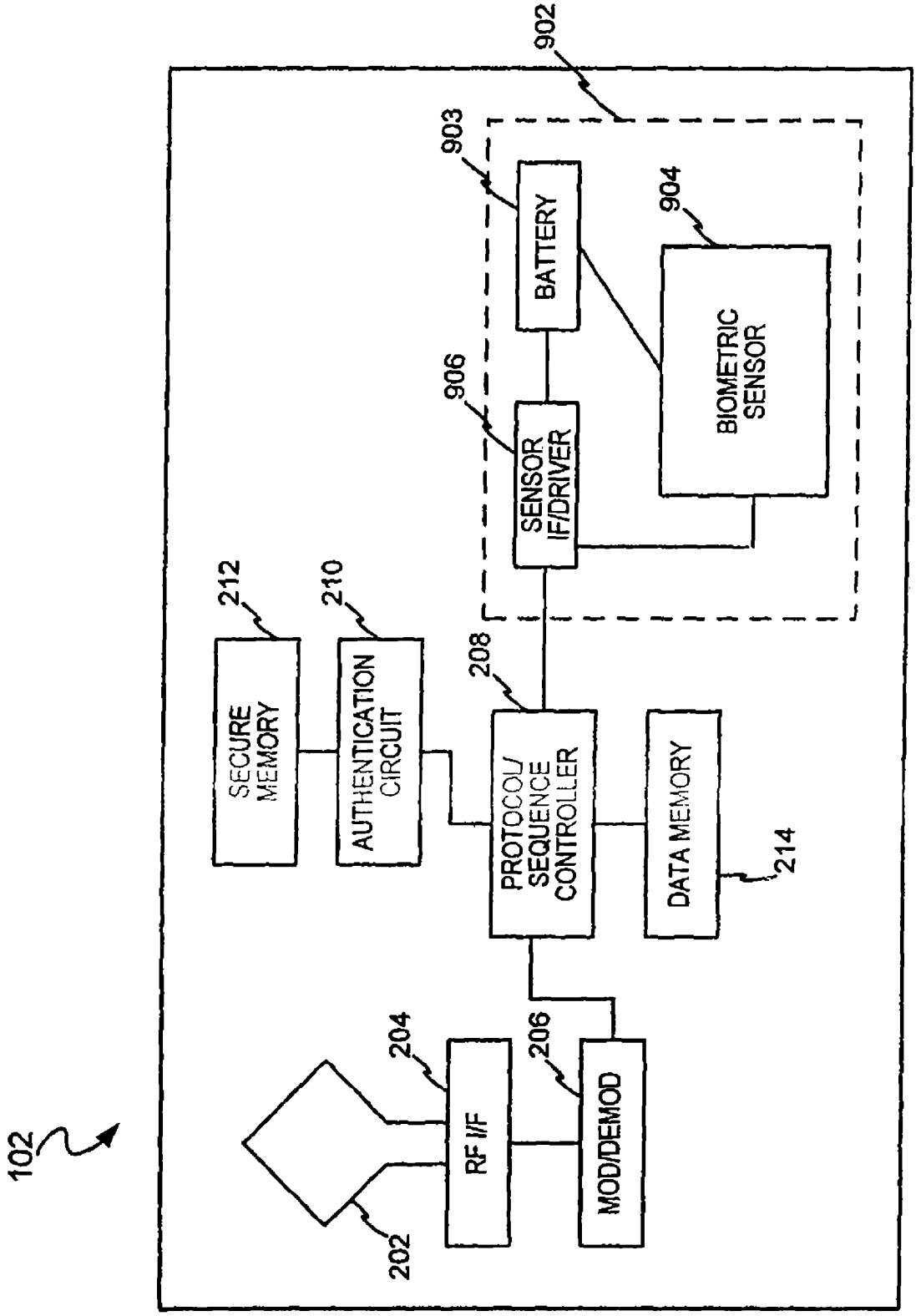
102
202
204
RF I/F
206
MOD/DEMOD
212
SECURE MEMORY
210
AUTHENTICATION CIRCUIT
208
PROTOCOL/ SEQUENCE CONTROLLER
DATA MEMORY
214
903
BATTERY
906
SENSOR IF/DRIVER
904
BIOMETRIC SENSOR
902

FIG. 9

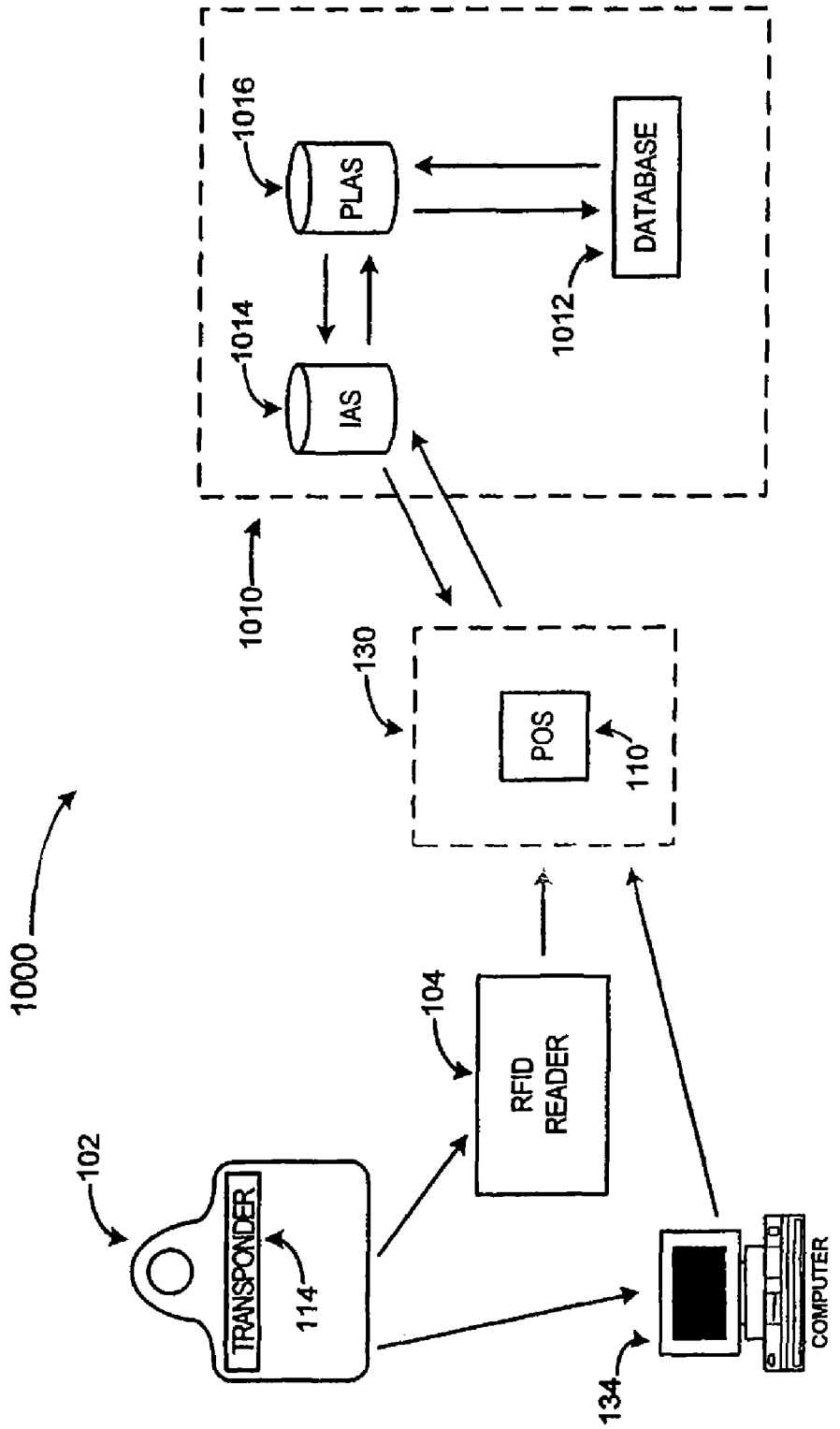
1000
102
TRANSPONDER
114
104
RFID READER
130
POS
110
1010
1014
IAS
1016
PLAS
DATABASE
1012
134
COMPUTER

FIG. 10

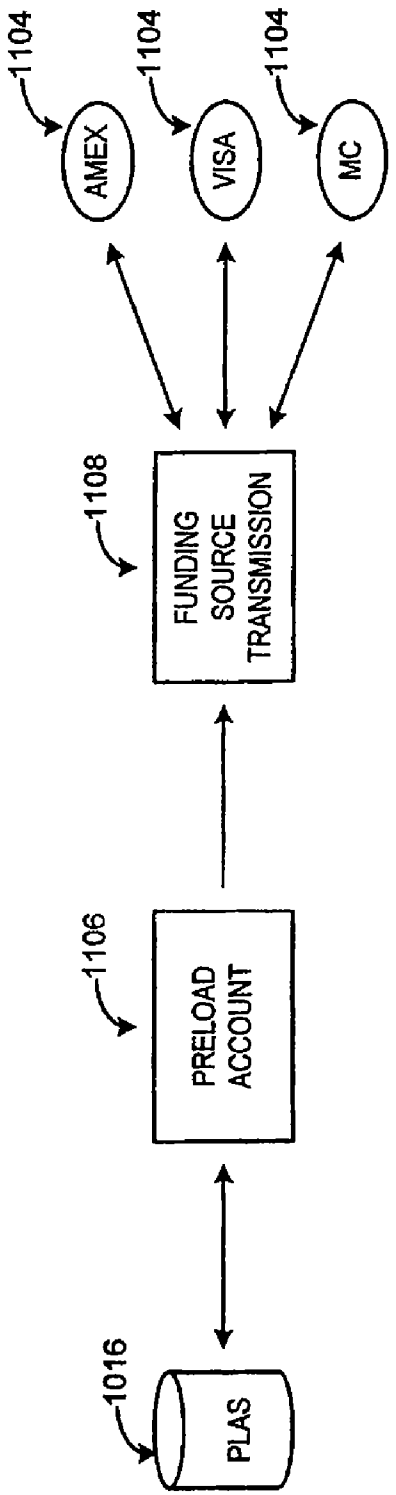

FIG. 11A

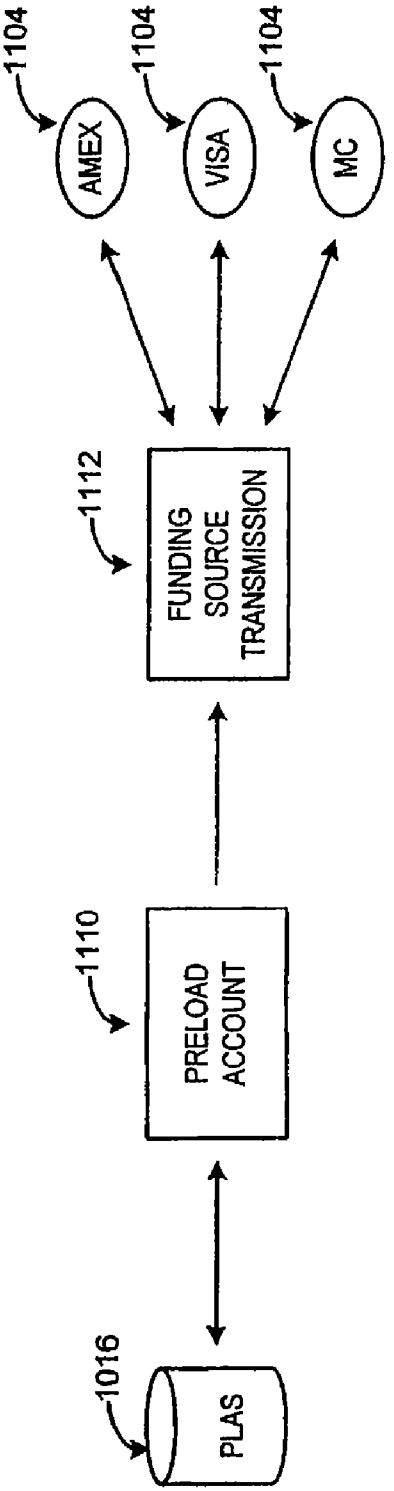

FIG. 11B

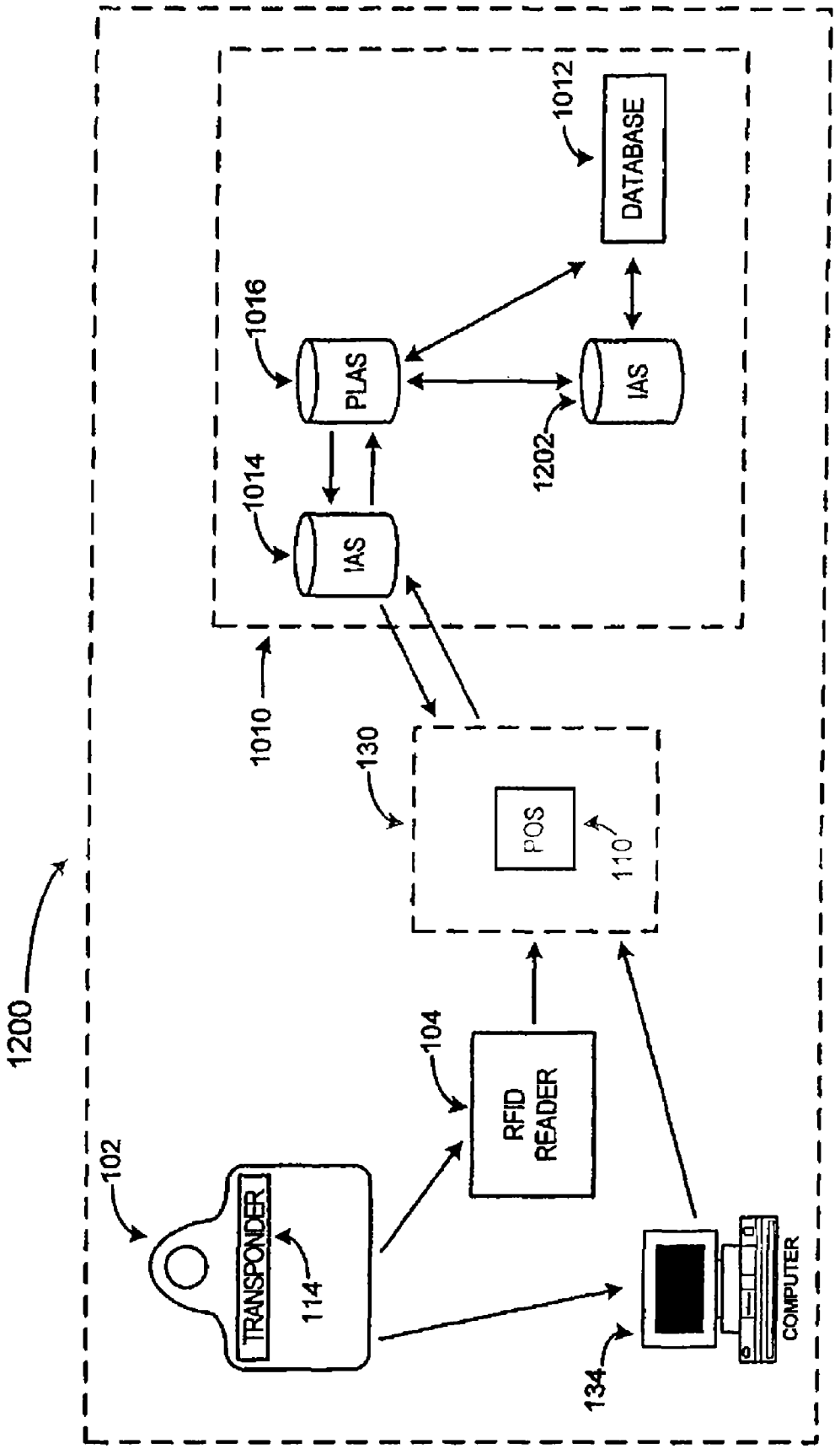
1200
102
TRANSPONDER
114
104
RFID READER
130
POS
110
1010
1014
IAS
1016
PLAS
1202
IAS
1012
DATABASE
134
COMPUTER

FIG. 12

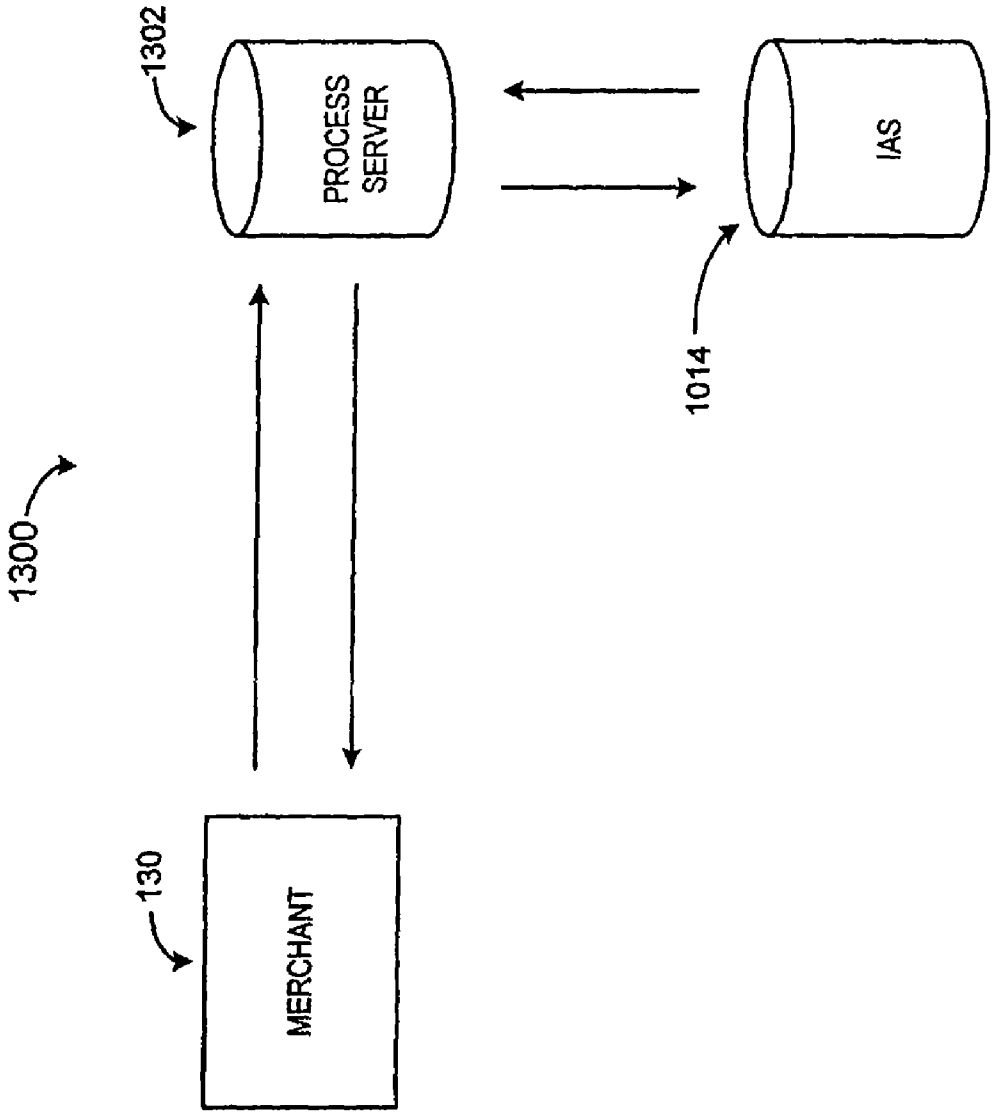

FIG. 13

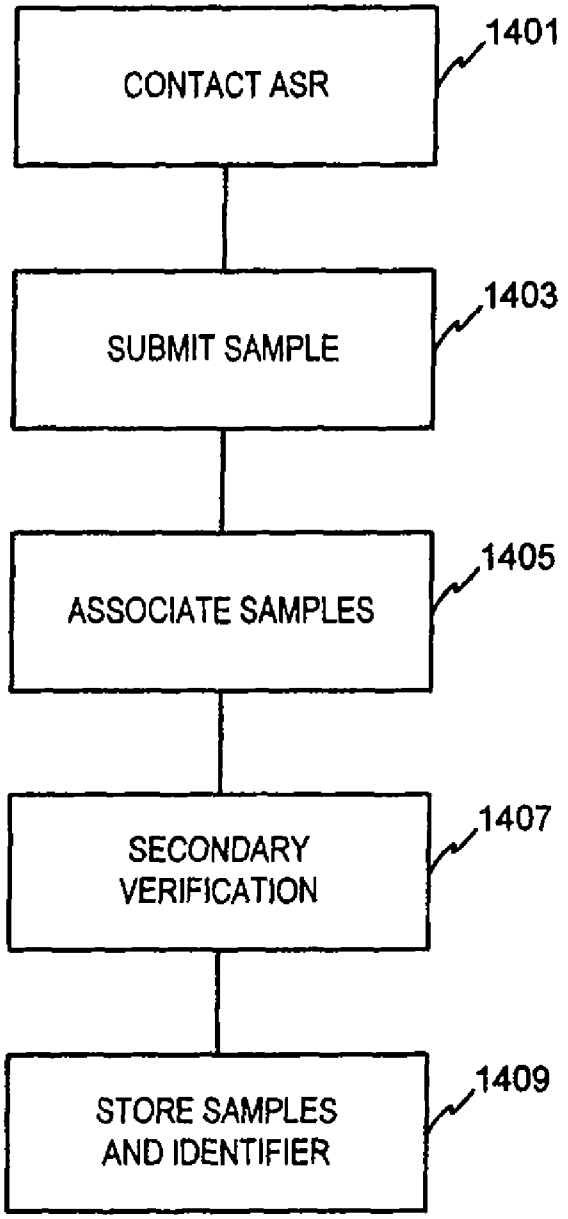
CONTACT ASR
1401
SUBMIT SAMPLE
1403
ASSOCIATE SAMPLES
1405
SECONDARY VERIFICATION
1407
STORE SAMPLES AND IDENTIFIER
1409

FIG. 14

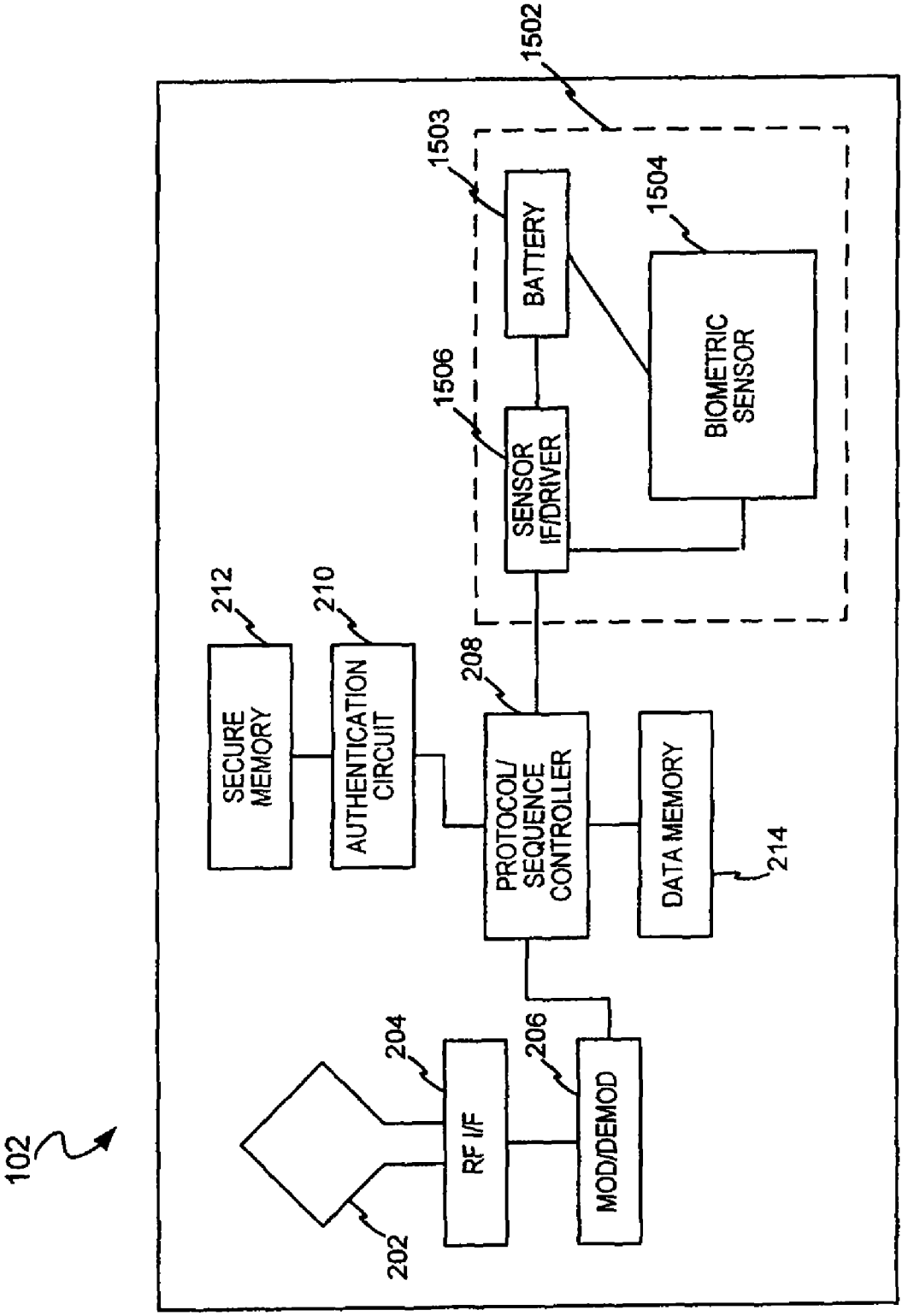
102
202
RF I/F
204
MOD/DEMOD
206
PROTOCOL/
SEQUENCE
CONTROLLER
208
DATA MEMORY
214
SECURE
MEMORY
212
AUTHENTICATION
CIRCUIT
210
SENSOR
IF/DRIVER
1506
BATTERY
1503
BIOMETRIC
SENSOR
1504
1502

FIG. 15

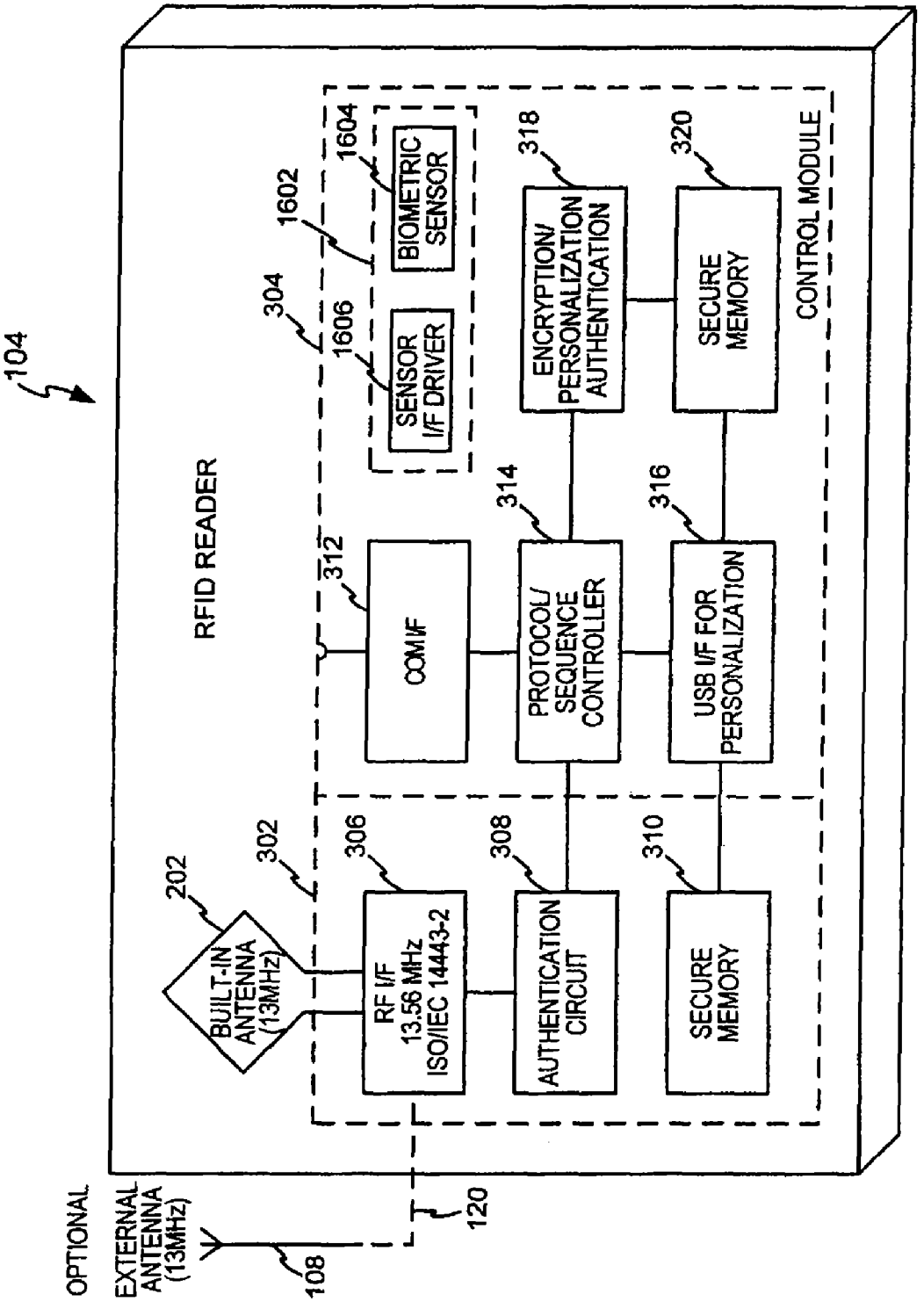
104
RFID READER
304
1602
1604
BIOMETRIC SENSOR
1606
SENSOR I/F DRIVER
318
ENCRYPTION/ PERSONALIZATION AUTHENTICATION
320
SECURE MEMORY
CONTROL MODULE
312
COM I/F
314
PROTOCOL/ SEQUENCE CONTROLLER
316
USB I/F FOR PERSONALIZATION
202
BUILT-IN ANTENNA (13MHz)
302
306
RF I/F 13.56 MHz ISO/IEC 14443-2
308
AUTHENTICATION CIRCUIT
310
SECURE MEMORY
OPTIONAL
EXTERNAL ANTENNA (13MHz)
108
120

FIG. 16

VOICEPRINT BIOMETRICS ON A PAYMENT DEVICE

RELATED APPLICATIONS

This application is a divisional of U.S. Ser. No. 10/708,831, filed on Mar. 26, 2004 now abandoned, and entitled "METHOD AND SYSTEM FOR HAND GEOMETRY RECOGNITION BIOMETRICS ON A FOB". The '831 application is a continuation in part of U.S. Ser. No. 10/340,352, filed on Jan. 10, 2003, and entitled "SYSTEM AND METHOD FOR INCENTING PAYMENT USING RADIO FREQUENCY IDENTIFICATION IN CONTACT AND CONTACTLESS TRANSACTIONS." The '352 application is a non-provisional of U.S. Provisional No. 60/396,577 filed Jul. 16, 2002. The '352 application is also a continuation in part of U.S. patent application Ser. No. 10/192,488, entitled "SYSTEM AND METHOD FOR PAYMENT USING RADIO FREQUENCY IDENTIFICATION IN CONTACT AND CONTACTLESS TRANSACTIONS," filed on Jul. 9, 2002, which has now issued as U.S. Pat. No. 7,239,226 on Jul. 3, 2007. The '488 application is a non-provisional of U.S. Provisional No. 60/304,216, filed on Jul. 10, 2001. The '352 application is also a continuation in part of U.S. patent application Ser. No. 10/318,432, entitled "SYSTEM AND METHOD FOR SELECTING LOAD OPTIONS FOR USE IN RADIO FREQUENCY IDENTIFICATION IN CONTACT AND CONTACTLESS TRANSACTIONS," filed Dec. 13, 2002. The '432 application is a non-provisional of U.S. Provisional No. 60/396,577 filed Jul. 16, 2002. The '352 application is also a continuation in part of U.S. patent application Ser. No. 10/318,480, entitled "SYSTEM AND METHOD FOR PAYMENT USING RADIO FREQUENCY IDENTIFICATION IN CONTACT AND CONTACTLESS TRANSACTIONS," filed Dec. 13, 2002, which has issued as U.S. Pat. No. 7,249,112 on Jul. 24, 2007. The '480 application is also a non-provisional of U.S. Provisional Patent Application No. 60/396,577, filed Jul. 16, 2002. All of the above applications are hereby incorporated by reference.

FIELD OF INVENTION

This invention generally relates to a system and method for using voiceprint biometrics with a transponder-reader system, and more particularly, to configuring a transponder and transponder-reader for biometric security.

BACKGROUND OF THE INVENTION

Like barcode and voice data entry, RFID is a contactless information acquisition technology. RFID systems are wireless, and are usually extremely effective in hostile environments where conventional acquisition methods fail. RFID has established itself in a wide range of markets, such as, for example, the high-speed reading of railway containers, tracking moving objects such as livestock or automobiles, and retail inventory applications. As such, RFID technology has become a primary focus in automated data collection, identification and analysis systems worldwide.

Of late, companies are increasingly embodying RFID data acquisition technology in a fob or tag for use in completing financial transactions. A typical fob includes a transponder and is ordinarily a self-contained device which may be contained on any portable form factor. In some instances, a battery may be included with the fob to power the transponder. In which case the internal circuitry of the fob (including the transponder) may draw its operating power from the battery

power source. Alternatively, the fob may exist independent of an internal power source. In this instance the internal circuitry of the fob (including the transponder) may gain its operating power directly from an RF interrogation signal. U.S. Pat. No. 5,053,774, issued to Schuermann, describes a typical transponder RF interrogation system which may be found in the prior art. The Schuermann patent describes in general the powering technology surrounding conventional transponder structures. U.S. Pat. No. 4,739,328, discusses a method by which a conventional transponder may respond to a RF interrogation signal. Other typical modulation techniques which may be used include, for example, ISO/IEC 14443 and the like.

In the conventional fob powering technologies used, the fob is typically activated upon presenting the fob in an interrogation signal. In this regard, the fob may be activated irrespective of whether the user desires such activation. Inadvertent presentation of the fob may result in initiation and completion of an unwanted transaction. Thus, a fob system is needed which allows the fob user to control activation of the fob to limit transactions being undesirably completed.

One of the more visible uses of the RFID technology is found in the introduction of Exxon/Mobil's Speedpass® and Shell's EasyPay® products. These products use transponders placed in a fob or tag which enables automatic identification of the user when the fob is presented at a Point of Sale (POS) device. Fob identification data is typically passed to a third-party server database, where the identification data is referenced to a customer (e.g., user) credit or debit account. In an exemplary processing method, the server seeks authorization for the transaction by passing the transaction and account data to an authorizing entity. Once authorization is received by the server, clearance is sent to the point of sale device for completion of the transaction. In this way, the conventional transaction processing method involves an indirect path which causes undue overhead due to the use of the third-party server.

A need exists for a transaction authorization system which allows fob transactions to be authorized while eliminating the cost associated with using third-party servers.

In addition, conventional fobs are limited in that they must be used in proximity to the Point of Sale device. That is, for fob activation, conventional fobs must be positioned within the area of transmission cast by the RF interrogation signal. More particularly, conventional fobs are not effective for use in situations where the user wishes to conduct a transaction at a point of interaction such as a computer interface.

Therefore, a need exists for a fob embodying RFID acquisition technology, which is capable of use at a point of interaction device and which is additionally capable of facilitating transactions via a computer interface connected to a network (e.g., the Internet).

Existing transponder-reader payment systems are also limited in that the conventional fob used in the systems is only responsive to one interrogation signal. Where multiple interrogation signals are used, the fob is only responsive to the interrogation signal to which it is configured. Thus, if the RFID reader of the system provides only an interrogation signal to which the fob is incompatible, the fob will not be properly activated.

Therefore, a need exists for a fob which is responsive to more than one interrogation signal.

Existing transponder-reader payment systems are additionally limited in that the payment systems are typically linked to a funding source associated with the transponder which includes a predetermined spending limit. Thus no flexibility is provided in instances where the payment is requested which exceeds the predetermined spending limit. This is typi-

cally true in that traditional methods for processing a requested transaction involve comparing the transaction to the spending limit or to an amount stored in a preloaded value data file prior to providing transaction authorization to a merchant.

Thus, a system is needed which processes transponder-reader payment requests irrespective of the spending limit assigned to an associated transponder-reader payment system funding source.

Further, traditional transponder-reader systems do not permit the user to manage the system user account data. This is extremely problematic where the user wishes to change a transponder-reader system funding source to a source which provides more available spending room, or where changes are made to the user's status (e.g., change in address, phone number, email, etc.) for which the transponder-reader account provider wishes to readily update the user's account.

Thus a need exists for a transponder-reader system which will allow the user limited access to the transponder-reader account for managing account data.

Further still, existing transponder-reader systems do not usually permit means for automatically incenting the use of the fob associated with the system as opposed to the credit or charge card associated with the fob. That is, conventional transponder-reader systems do not provide a means for encouraging usage of the transponder reader system by encouraging use of the fob product since the present systems do not sufficiently distinguish between usage of a system transponder and a charge or credit card account associated with the transponder.

Consequently, a need exists for a transponder-reader system which is capable of determining when a system transponder is used, and providing an incentive for such usage.

Still further, present systems are limited in that the systems are unable to track credit or charge card usage and fob usage for a single funding source. For example, in typical prior art systems, a fob may be linked to a specified funding source (e.g., American Express, MasterCard, Visa, etc.) which may be used to provide funds for satisfaction of a transaction request. The funding source may additionally have a consumer credit or charge card which may be associated with the fob and which may be used for contact transactions. Where the credit or charge card is used, a statement reporting the card usage is provided to the card user. However, the reporting statement does not include a reporting of the fob product usage. Thus, a fob user is unable to adequately chart, analyze or compare fob usage to the usage of the associated card. This is especially problematic where the funding source is used by more than one entity (e.g., spouses, multiple company personnel, etc.) or where one entity may use the fob and a separate entity may use the card associated with the fob.

Thus, a need exists for a transponder-reader payment system which would permit reporting of the fob usage and the credit card usage in a single file.

SUMMARY OF THE INVENTION

Described herein is a system and method for using RFID technology to initiate and complete financial transactions. The transponder-reader payment system described herein may include a RFID reader operable to provide a RF interrogation signal for powering a transponder system, receiving a transponder system RF signal, and providing transponder system account data relative to the transponder system RF signal. The transponder-reader payment system may include a RFID protocol/sequence controller in electrical communication with one or more interrogators for providing an interrogation signal to a transponder, a RFID authentication circuit for authenticating the signal received from the transponder, a serial or parallel interface for interfacing with a point of interaction device, and an USB or serial interface, for use in personalizing the RFID reader and/or the transponder. The transponder-reader payment system may further include a fob including one or more transponders (e.g., modules) responsive to one or more interrogation signals and for providing an authentication signal for verifying that the transponder and/or the RFID reader are authorized to operate within the transponder-reader payment system. In this way, the fob may be responsive to multiple interrogation signals provided at different frequencies. Further, the fob may include a USB or serial interface for use with a computer network or with the RFID reader.

The RFID system and method according to the present invention may include a transponder which may be embodied in a fob, tag, card or any other form factor (e.g., wristwatch, keychain, cell phone, etc.), which may be capable of being presented for interrogation. In that regard, although the transponder is described herein as embodied in a fob, the invention is not so limited.

The system may further include a RFID reader configured to send a standing RFID recognition signal which may be transmitted from the RFID reader via radio frequency (or electromagnetic) propagation. The fob may be placed within proximity to the RFID reader such that the RFID signal may interrogate the fob and initialize fob identification procedures.

In one exemplary embodiment, as a part of the identification process, the fob and the RFID reader may engage in mutual authentication. The RFID reader may identify the fob as including an authorized system transponder for receiving encrypted information and storing the information on the fob memory. Similarly, the fob, upon interrogation by the RFID reader, may identify the RFID reader as authorized to receive the encrypted and stored information. Where the RFID reader and the fob successfully mutually authenticate, the fob may transmit to the RFID reader certain information identifying the transaction account or accounts to which the fob is associated. The RFID reader may receive the information and forward the information to facilitate the completion of a transaction. In one exemplary embodiment, the RFID reader may forward the information to a point of interaction device (e.g., POS or computer interface) for transaction completion. The mutual authorization process disclosed herein aids in ensuring fob transponder-reader payment system security.

In another exemplary embodiment, the fob according to the present invention, includes means for completing transactions via a computer interface. The fob may be connected to the computer using a USB or serial interface fob account information may be transferred to the computer for use in completing a transaction via a network (e.g., the Internet).

In yet another exemplary embodiment of the present invention, a system is provided which incents usage of the transponder-reader system transponder (e.g., fob). The system distinguishes between the usage of a fob and the usage of a charge or credit card sharing the same funding source as the fob. Where the fob is used, the system may provide incentives to the user based on criteria predetermined by the fob issuer. Additionally, where a preloaded fob system is used, the present invention recognizes when the associated fob preloaded value data file is loaded or reloaded with funds. The invention then may provide reward points based on the criteria associated with the loading or reloading action. Further, the system according to this invention may incent patronage of a merchant. In this case, the system may receive a fob

transaction request and incent the fob user based on a marker or other identifier correlated with the merchant. The marker may be included in the transaction identification, in a merchant identification provided with the transaction, or a combination of both.

In still another exemplary embodiment of the invention, a system is disclosed which enables the fob user/owner to manage the account associated with the fob. The user is provided limited access to all or a portion of the fob account information stored on the account provider database for updating, for example, demographic information, account funding source, and/or account restrictions (e.g., spending limits, personal identification number, etc.). Access to all or a portion of the account may be provided to the user telephonically, via a network (e.g., online) or via offline communications. For example, the fob user may be provided access to a system which has delayed communications with the account provider database wherein such a system may include, for example, a kiosk which provides batch transmissions to the account provider system. In this way, the fob user/owner may update his account information in real-time (e.g., telephonically or online) or at the time the account provider receives the updated information (e.g., offline).

In a further exemplary embodiment, the present invention provides methods for processing a transaction request whereby the amount of the transaction request may be approved prior to requesting funding from the funding source and/or verifying that the amount for completing the transaction is available. In this way, the transaction may be approved provided the transaction and/or account meets certain predetermined authorization criteria. Once the criteria is met, the transaction is authorized and authorization is provided to the requesting agent (e.g., merchant). In one instance the payment for the transaction is requested from the funding source simultaneously to, or immediately following, the providing of the authorization to the merchant. In another instance, the payment for transactions is requested at a time period later than when the authorization is provided to the merchant.

In yet another embodiment, the transponder, transponder-reader, and/or transponder-reader system are configured with a biometric security system. The biometric security system includes a transponder and a reader communicating with the system. The biometric security system also includes a voiceprint sensor that detects biometric sample data and a device for verifying biometric sample data.

In yet another embodiment, the present invention discloses methods for proffering and processing voiceprint sample data to facilitate authorization of transactions.

These features and other advantages of the system and method, as well as the structure and operation of various exemplary embodiments of the system and method, are described below.

BRIEF DESCRIPTION OF THE DRAWINGS

The accompanying drawings, wherein like numerals depict like elements, illustrate exemplary embodiments of the present invention, and together with the description, serve to explain the principles of the invention. In the drawings:

FIG. **1**A illustrates an exemplary RFID-based system in accordance with the present invention, wherein exemplary components used for fob transaction completion are depicted;

FIG. **1**B illustrates an exemplary personalization system in accordance with the present invention;

FIG. **2** is a schematic illustration of an exemplary fob in accordance with the present invention;

FIG. **3** is a schematic illustration of an exemplary RFID reader in accordance with the present invention;

FIG. **4** is an exemplary flow diagram of an exemplary authentication process in accordance with the present invention;

FIG. **5** is an exemplary flow diagram of an exemplary decision process for a protocol/sequence controller in accordance with the present invention;

FIGS. **6**A-B are an exemplary flow diagram of a fob personalization process in accordance with the present invention;

FIGS. **7**A-B are an exemplary flow diagram of a RFID reader personalization process in accordance with the present invention;

FIG. **8** is a flow diagram of an exemplary payment/transaction process in accordance with the present invention;

FIG. **9** is another schematic illustration of an exemplary fob in accordance with the present invention;

FIG. **10** is a depiction of an exemplary preloaded fob payment/transaction process in accordance with the present invention;

FIGS. **11**A-B are a depiction of an exemplary preloaded fob account reload process in accordance with the present invention;

FIG. **12** is a depiction of an exemplary Direct Link payment/transaction process in accordance with the present invention;

FIG. **13** is a depiction of another exemplary payment/transaction process in accordance with the present invention;

FIG. **14** is a depiction of an exemplary biometrics process in accordance with the present invention;

FIG. **15** is another schematic illustration of an exemplary fob in accordance with the present invention; and

FIG. **16** another schematic illustration of an exemplary fob in accordance with the present invention.

DETAILED DESCRIPTION

The present invention may be described herein in terms of functional block components, screen shots, optional selections and various processing steps. Such functional blocks may be realized by any number of hardware and/or software components configured to perform to specified functions. For example, the present invention may employ various integrated circuit components, (e.g., memory elements, processing elements, logic elements, look-up tables, and the like), which may carry out a variety of functions under the control of one or more microprocessors or other control devices. Similarly, the software elements of the present invention may be implemented with any programming or scripting language such as C, C++, Java, COBOL, assembler, PERL, extensible markup language (XML), JavaCard and MULTOS with the various algorithms being implemented with any combination of data structures, objects, processes, routines or other programming elements. Further, it should be noted that the present invention may employ any number of conventional techniques for data transmission, signaling, data processing, network control, and the like. For a basic introduction on cryptography, review a text written by Bruce Schneier entitled "Applied Cryptography: Protocols, Algorithms, and Source Code in C," published by John Wiley & Sons (second edition, 1996), herein incorporated by reference.

In addition, many applications of the present invention could be formulated. The exemplary network disclosed herein may include any system for exchanging data or transacting business, such as the Internet, an intranet, an extranet, WAN, LAN, satellite communications, and/or the like. It is

noted that the network may be implemented as other types of networks, such as an interactive television network (ITN).

Where required, the system user may interact with the system via any input device such as, a keypad, keyboard, mouse, kiosk, personal digital assistant, handheld computer (e.g., Palm Pilot®, Blackberry®, cellular phone and/or the like). Similarly, the invention could be used in conjunction with any type of personal computer, network computer, work station, minicomputer, mainframe, or the like running any operating system such as any version of Windows, Windows NT, Windows 2000, Windows 98, Windows 95, MacOS, OS/2, BeOS, Linux, UNIX, Solaris or the like. Moreover, although the invention may frequently be described as being implemented with TCP/IP communications protocol, it should be understood that the invention could also be implemented using SNA, IPX, Appletalk, IPte, NetBIOS, OSI or any number of communications protocols. Moreover, the system contemplates, the use, sale, or distribution of any goods, services or information over any network having similar functionality described herein.

FIG. **1**A illustrates an exemplary RFID transaction system **100**A in accordance with the present invention, wherein exemplary components for use in completing a fob transaction are depicted. In general, the operation of system **100**A may begin when a fob **102** is presented for payment, and is interrogated by a RFID reader **104** or, alternatively, interface **134**. Fob **102** and RFID reader **104** may then engage in mutual authentication after which the transponder **114** may provide the transponder identification and/or account identifier to RFID reader **104** which may further provide the information to the merchant system **130** POS device **110**.

System **100**A may include fob **102** having a transponder **114** and RFID reader **104** in RF communication with fob **102**. Although the present invention is described with respect to fob **102**, the invention is not to be so limited. Indeed, system **100** may include any device having a transponder which is configured to communicate with RFID reader **104** via RF communication. Typical devices may include, for example, a key ring, tag, card, cell phone, wristwatch or any such form capable of being presented for interrogation.

RFID reader **104** may be configured to communicate using a RFID internal antenna **106**. Alternatively, RFID reader **104** may include an external antenna **108** for communications with fob **102**, where the external antenna may be made remote to RFID reader **104** using a suitable cable and/or data link **120**. RFID reader **104** may be further in communication with a merchant system **130** via a data link **122**. System **100**A may include a transaction completion system including a point of interaction device such as, for example, a merchant point of sale (POS) device **110** or a computer interface (e.g., user interface) **134**. In one exemplary embodiment the transaction completion system may include a merchant system **130** including POS device **110** in communication with RFID reader **104** (via data link **122**). As described more fully below, the transaction completion system may include user interface **134** connected to a network **136** and to the transponder via a USB connector **132**.

Although the point of interaction device is described herein with respect to a merchant point of sale (POS) device, the invention is not to be so limited. Indeed, a merchant POS device is used herein by way of example, and the point of interaction device may be any device capable of receiving fob account data. In this regard, the POS may be any point of interaction device enabling the user to complete a transaction using fob **102**. POS device **110** may be in further communication with a customer interface **118** (via data link **128**) for entering at least a customer identity verification information. In addition, POS device **110** may be in communication with a merchant host network **112** (via data link **124**) for processing any transaction request. In this arrangement, information provided by RFID reader **104** is provided to POS device **110** of merchant system **130** via data link **122**. POS device **110** may receive the information (and alternatively may receive any identity verifying information from customer interface **118** via data link **128**) and provide the information to host system **112** for processing.

A variety of conventional communications media and protocols may be used for data links **120**, **122**, **124**, and **128**. For example, data links **120**, **122**, **124**, and **128** may be an Internet Service Provider (ISP) configured to facilitate communications over a local loop as is typically used in connection with standard modem communication, cable modem, dish networks, ISDN, Digital Subscriber Lines (DSL), or any wireless communication media. In addition, merchant system **130** including POS device **110** and host network **112** may reside on a local area network which interfaces to a remote network (not shown) for remote authorization of an intended transaction. Merchant system **130** may communicate with the remote network via a leased line, such as a T1, D3 line, or the like. Such communications lines are described in a variety of texts, such as, "Understanding Data Communications," by Gilbert Held, which is incorporated herein by reference.

An account number, as used herein, may include any identifier for an account (e.g., credit, charge debit, checking, savings, reward, loyalty, or the like) which may be maintained by a transaction account provider (e.g., payment authorization center) and which may be used to complete a financial transaction. A typical account number (e.g., account data) may be correlated to a credit or debit account, loyalty account, or rewards account maintained and serviced by such entities as American Express®, Visa® and/or MasterCard® or the like. For ease in understanding, the present invention may be described with respect to a credit account. However, it should be noted that the invention is not so limited and other accounts permitting an exchange of goods and services for an account data value is contemplated to be within the scope of the present invention.

In addition, the account number (e.g., account data) may be associated with any device, code, or other identifier/indicia suitably configured to allow the consumer to interact or communicate with the system, such as, for example, authorization/access code, personal identification number (PIN), Internet code, digital certificate, biometric data, and/or other identification indicia. The account number may be optionally located on a rewards card, charge card, credit card, debit card, prepaid card, telephone card, smart card, magnetic stripe card, bar code card, and/or the like. The account number may be distributed and stored in any form of plastic, electronic, magnetic, and/or optical device capable of transmitting or downloading data to a second device. A customer account number may be, for example, a sixteen-digit credit card number, although each credit provider has its own numbering system, such as the fifteen-digit numbering system used by American Express®. Each company's credit card numbers comply with that company's standardized format such that the company using a sixteen-digit format will generally use four spaced sets of numbers, as represented by the number "0000 0000 0000 0000". In a typical example, the first five to seven digits are reserved for processing purposes and identify the issuing bank, card type and, etc. In this example, the last sixteenth digit is used as a sum check for the sixteen-digit number. The intermediary eight-to-ten digits are used to uniquely identify the customer. The account number stored as Track 1 and Track 2 data as defined in ISO/IEC 7813, and

further may be made unique to fob **102**. In one exemplary embodiment, the account number may include a unique fob serial number and user identification number, as well as specific application applets. The account number may be stored in fob **102** inside a database **214**, as described more fully below. Database **214** may be configured to store multiple account numbers issued to fob **102** user by the same or different account providing institutions. Where the account data corresponds to a loyalty or rewards account, database **214** may be configured to store the attendant loyalty or rewards points data.

FIG. **2** illustrates a block diagram of the many functional blocks of an exemplary fob **102** in accordance with the present invention. Fob **102** may be a RFID fob **102** which may be presented by the user to facilitate an exchange of funds or points, etc., for receipt of goods or services. As described herein, by way of example, fob **102** may be a RFID fob which may be presented for facilitating payment for goods and/or services.

Fob **102** may include an antenna **202** for receiving an interrogation signal from RFID reader **104** via antenna **106** (or alternatively, via external antenna **108**). Fob antenna **202** may be in communication with a transponder **114**. In one exemplary embodiment, transponder **114** may be a 13.56 MHz transponder compliant with the ISO/IEC 14443 standard, and antenna **202** may be of the 13 MHz variety. Transponder **114** may be in communication with a transponder compatible modulator/demodulator **206** configured to receive the signal from transponder **114** and configured to modulate the signal into a format readable by any later connected circuitry. Further, modulator/demodulator **206** may be configured to format (e.g., demodulate) a signal received from the later connected circuitry in a format compatible with transponder **114** for transmitting to RFID reader **104** via antenna **202**. For example, where transponder **114** is of the 13.56 MHz variety, modulator/demodulator **206** may be ISO/IEC 14443-2 compliant.

Modulator/demodulator **206** may be coupled to a protocol/sequence controller **208** for facilitating control of the authentication of the signal provided by RFID reader **104**, and for facilitating control of the sending of fob **102** account number. In this regard, protocol/sequence controller **208** may be any suitable digital or logic driven circuitry capable of facilitating determination of the sequence of operation for fob **102** inner-circuitry. For example, protocol/sequence controller **208** may be configured to determine whether the signal provided by RFID reader **104** is authenticated, and thereby providing to RFID reader **104** the account number stored on fob **102**.

Protocol/sequence controller **208** may be further in communication with authentication circuitry **210** for facilitating authentication of the signal provided by RFID reader **104**. Authentication circuitry may be further in communication with a non-volatile secure memory database **212**. Secure memory database **212** may be any suitable elementary file system such as that defined by ISO/IEC 7816-4 or any other elementary file system allowing a lookup of data to be interpreted by the application on the chip. Database **212** may be any type of database, such as relational, hierarchical, object-oriented, and/or the like. Common database products that may be used to implement the databases include DB2 by IBM (White Plains, N.Y.), any of the database products available from Oracle Corporation (Redwood Shores, Calif.), Microsoft Access or MSSQL by Microsoft Corporation (Redmond, Wash.), or any other database product. Database **212** may be organized in any suitable manner, including as data tables or lookup tables. Association of certain data may be accomplished through any data association technique known and practiced in the art. For example, the association may be accomplished either manually or automatically. Automatic association techniques may include, for example, a database search, a database merge, GREP, AGREP, SQL, and/or the like. The association step may be accomplished by a database merge function, for example, using a "key field" in each of the manufacturer and retailer data tables. A "key field" partitions the database according to the high-level class of objects defined by the key field. For example, a certain class may be designated as a key field in both the first data table and the second data table, and the two data tables may then be merged on the basis of the class data in the key field. In this embodiment, the data corresponding to the key field in each of the merged data tables is preferably the same. However, data tables having similar, though not identical, data in the key fields may also be merged by using AGREP, for example.

The data may be used by protocol/sequence controller **208** for data analysis and used for management and control purposes, as well as security purposes. Authentication circuitry may authenticate the signal provided by RFID reader **104** by association of the RFID signal to authentication keys stored on database **212**. Encryption circuitry may use keys stored on database **212** to perform encryption and/or decryption of signals sent to or from RFID reader **104**.

In addition, protocol/sequence controller **208** may be in communication with a database **214** for storing at least fob **102** account data, and a unique fob **102** identification code. Protocol/sequence controller **208** may be configured to retrieve the account number from database **214** as desired. Database **214** may be of the same configuration as database **212** described above. The fob account data and/or unique fob identification code stored on database **214** may be encrypted prior to storage. Thus, where protocol/sequence controller **208** retrieves the account data, and or unique fob identification code from database **214**, the account number may be encrypted when being provided to RFID reader **104**. Further, the data stored on database **214** may include, for example, an unencrypted unique fob **102** identification code, a user identification, Track 1 and 2 data, as well as specific application applets.

Fob **102** may be configured to respond to multiple interrogation frequency transmissions provided by RFID reader **104**. That is, as described more fully below, RFID reader **104** may provide more than one RF interrogation signal. In this case, fob **102** may be configured to respond to the multiple frequencies by including in fob **102** one or more additional RF signal receiving/transmitting units **226**. RF signal receiving/transmitting unit **226** may include an antenna **218** and transponder **220** where antenna **218** and transponder **220** are compatible with at least one of the additional RF signals provided by RFID reader **104**. For example, in one exemplary embodiment, fob **102** may include a 134 KHz antenna **218** configured to communicate with a 134 KHz transponder **220**. In this exemplary configuration, an ISO/IEC 14443-2 compliant modulator/demodulator may not be required. Instead, the 134 KHz transponder may be configured to communicate directly with protocol/sequence controller **208** for transmission and receipt of authentication and account number signals as described above.

In another embodiment, fob **102** may further include a universal serial bus (USB) connector **132** for interfacing fob **102** to a user interface **134**. User interface **134** may be further in communication with POS device **110** via network **136**. Network **136** may be the Internet, an intranet, or the like as is described above with respect to network **112**. Further, user interface **134** may be similar in construction to any conventional input devices and/or computing systems aforemen-

tioned for permitting the system user to interact with the system. In one exemplary embodiment, fob **102** may be configured to facilitate online Internet payments. A USB converter **222** may be in communication with a USB connector **132** for facilitating the transfer of information between the modulator/demodulator **206** and USB connector **132**. Alternatively, USB converter **222** may be in communication with protocol/sequence controller **208** to facilitate the transfer of information between protocol/sequence controller **208** and USB connector **132**.

Where fob **102** includes a USB connector **132**, fob **102** may be in communication with, for example, a USB port on user interface **134**. The information retrieved from fob **102** may be compatible with credit card and/or smart card technology enabling usage of interactive applications on the Internet. No RFID reader may be required in this embodiment since the connection to POS device **110** may be made using a USB port on user interface **134** and network **136**.

Fob **102** may include means for enabling activation of the fob by the user. In one exemplary embodiment, a switch **230** which may be operated by the user of fob **102**. Switch **230** on fob **102** may be used to selectively or inclusively activate fob **102** for particular uses. In this context, the term "selectively" may mean that switch **230** enables the user to place fob **102** in a particular operational mode. For example, the user may place fob **102** in a mode for enabling purchase of a good or of a service using a selected account number. Alternatively, the fob may be placed in a mode as such that the fob account number is provided by USB port **132** (or serial port) only and the fob transponder **114** is disabled. In addition, the term "inclusively" may mean that fob **102** is placed in an operational mode permitting fob **102** to be responsive to the RF interrogation and interrogation via USB connector **132**. In one particular embodiment, switch **230** may remain in an OFF position ensuring that one or more applications or accounts associated with fob **102** are non-reactive to any commands issued by RFID reader **104**. As used herein, the OFF position may be termed the "normal" position of activation switch **230**, although other normal positions are contemplated.

In another exemplary embodiment, when switch **230** is moved from the OFF position, fob **102** may be deemed activated by the user. That is, switch **230** may activate internal circuitry in fob **102** for permitting the fob to be responsive to RF signals (e.g., commands from RFID reader **104**). In this way, switch **230** may facilitate control of the active and inactive states of fob **102**. Such control increases the system security by preventing inadvertent or illegal use of fob **102**.

In one exemplary embodiment, switch **230** may be a simple mechanical device in communication with circuitry which may electrically prevent the fob from being powered by a RFID reader. That is, when switch **230** is in its normal position, switch **230** may provide a short to fob **102** internal circuitry, preventing fob **102** from being responsive to interrogation by RF or via the USB connector **230**. In this arrangement, switch **230** may be, for example, a "normally closed" (NC) configured switch, which may be electrically connected to the antenna **202** at the interface of the antenna **202** and transponder **114**. Switch **230** may be depressed, which may open switch **230** fully activating the antenna **202**.

In yet another exemplary embodiment, fob **102** may include a biometric sensor and biometric membrane configured to operate as switch **230** and activate fob **102** when provided biometric signal from fob **102** user. Such biometric signal may be the digital reading of a fingerprint, thumbprint, or the like. Typically, where biometric circuitry is used, the biometric circuitry may be powered by an internal voltage source (e.g., battery). In this case, the switch may not be a simple mechanical device, but a switch which is powered. In yet another exemplary embodiment, switch **230** may be battery powered though no biometric circuitry is present in fob **102**.

In yet another embodiment, switch **230** may be a logic switch. Where switch **230** is a logic switch, switch **230** control software may be read from the sequence controller **208** to selectively control the activation of the various fob **102** components.

FIG. **3** illustrates an exemplary block diagram of RFID reader **104** in accordance with an exemplary embodiment of the present invention. RFID reader **104** includes, for example, an antenna **106** coupled to a RF module **302**, which is further coupled to a control module **304**. In addition, RFID reader **104** may include an antenna **108** positioned remotely from RFID reader **104** and coupled to RFID reader **104** via a suitable cable **120**, or other wire or wireless connection.

RF module **302** and antenna **106** may be suitably configured to facilitate communication with fob **102**. Where fob **102** is formatted to receive a signal at a particular RF frequency, RF module **302** may be configured to provide an interrogation signal at that same frequency. For example, in one exemplary embodiment, fob **102** may be configured to respond to an interrogation signal of about 13.56 MHz. In this case, RFID antenna **106** may be 13 MHz and may be configured to transmit an interrogation signal of about 13.56 MHz. That is, fob **102** may be configured to include a first and second RF module (e.g., transponder) where the first module may operate using a 134 kHz frequency and the second RF module may operate using a 13.56 MHz frequency. RFID reader **104** may include two receivers which may operate using the 134 kHz frequency, the 13.56 MHz frequency or both. When the reader **104** is operating at 134 kHz frequency, only operation with the 134 kHz module on fob **102** may be possible. When the reader **104** is operating at the 13.56 MHz frequency, only operation with the 13.56 MHz module on fob **102** may be possible. Where the reader **104** supports both a 134 kHz frequency and a 13.56 MHz RF module, fob **102** may receive both signals from the reader **104**. In this case, fob **102** may be configured to prioritize selection of the one or the other frequency and reject the remaining frequency. Alternatively, the reader **104** may receive signals at both frequencies from the fob upon interrogation. In this case, the reader **104** may be configured to prioritize selection of one or the other frequency and reject the remaining frequency.

Further, protocol/sequence controller **314** may include an optional feedback function for notifying the user of the status of a particular transaction. For example, the optional feedback may be in the form of an LED, LED screen and/or other visual display which is configured to light up or display a static, scrolling, flashing and/or other message and/or signal to inform fob **102** user that the transaction is initiated (e.g., fob is being interrogated), the fob is valid (e.g., fob is authenticated), transaction is being processed, (e.g., fob account number is being read by RFID reader) and/or the transaction is accepted or denied (e.g., transaction approved or disapproved). Such an optional feedback may or may not be accompanied by an audible indicator (or may present the audible indicator singly) for informing fob **102** user of the transaction status. The audible feedback may be a simple tone, multiple tones, musical indicator, and/or voice indicator configured to signify when the fob **102** is being interrogated, the transaction status, or the like.

RFID antenna **106** may be in communication with a transponder **306** for transmitting an interrogation signal and receiving at least one of an authentication request signal

and/or an account data from fob **102**. Transponder **306** may be of similar description as transponder **114** of FIG. **2**. In particular, transponder **306** may be configured to send and/or receive RF signals in a format compatible with antenna **202** in similar manner as was described with respect to fob transponder **114**. For example, where transponder **306** is 13.56 MHz RF rated antenna **202** may be 13.56 MHz compatible. Similarly, where transponder **306** is ISO/IEC 14443 rated, antenna **106** may be ISO/IEC 14443 compatible.

RF module **302** may include, for example, transponder **306** in communication with authentication circuitry **308** which may be in communication with a secure database **310**. Authentication circuitry **308** and database **310** may be of similar description and operation as described with respect to authentication circuitry **210** and secure memory database **212** of FIG. **2**. For example, database **310** may store data corresponding to fob **102** which are authorized to transact business over system **100**. Database **310** may additionally store RFID reader **104** identifying information for providing to fob **102** for use in authenticating whether RFID reader **104** is authorized to be provided the fob account number stored on fob database **214**.

Authentication circuitry **308** may be of similar description and operation as authentication circuitry **210**. That is, authentication circuitry **308** may be configured to authenticate the signal provided by fob **102** in similar manner that authentication circuitry **210** may be configured to authenticate the signal provided by RFID reader **104**. As is described more fully below, fob **102** and RFID reader **104** engage in mutual authentication. In this context, "mutual authentication" may mean that operation of the system **100** may not take place until fob **102** authenticates the signal from RFID reader **104**, and RFID reader **104** authenticates the signal from fob **102**.

FIG. **4** is a flowchart of an exemplary authentication process in accordance with the present invention. The authentication process is depicted as one-sided. That is, the flowchart depicts the process of RFID reader **104** authenticating fob **102**, although similar steps may be followed in the instance that fob **102** authenticates RFID reader **104**.

As noted, database **212** may store security keys for encrypting or decrypting signals received from RFID reader **104**. In an exemplary authentication process, where RFID reader **104** is authenticating fob **102**, RFID reader **104** may provide an interrogation signal to fob **102** (step **402**). The interrogation signal may include a random code generated by the RFID reader authentication circuit **210**, which is provided to fob **102** and which is encrypted using an unique encryption key corresponding to fob **102** unique identification code. For example, protocol/sequence controller **314** may provide a command to activate the authentication circuitry **308**. Authentication circuitry **308** may provide from database **310** a fob interrogation signal including a random number as a part of the authentication code generated for each authentication signal. The authentication code may be an alphanumeric code which is recognizable (e.g., readable) by RFID reader **104** and fob **102**. The authentication code may be provided to fob **102** via the RFID RF interface **306** and antenna **106** (or alternatively antenna **108**).

Fob **102** receives the interrogation signal (step **404**). The interrogation signal including the authorization code may be received at the RF interface **114** via antenna **202**. Once fob **102** is activated, the interrogation signal including the authorization code may be provided to the modulator/demodulator circuit **206** where the signal may be demodulated prior to providing the signal to protocol/sequence controller **208**. Protocol/sequence controller **208** may recognize the interrogation signal as a request for authentication of fob **102**, and provide the authentication code to authentication circuit **210**. Fob **102** may then encrypt the authentication code (step **406**). In particular, encryption may be done by authentication circuit **210**, which may receive the authentication code and encrypt the code prior to providing the encrypted authentication code to protocol/sequence controller **208**. Fob **102** may then provide the encrypted authentication code to RFID reader **104** (step **408**). That is, the encrypted authentication code may be provided to RFID reader **104** via modulator/demodulator circuit **206**, RF interface **114** (e.g., transponder **114**) and antenna **202**.

RFID reader **104** may then receive the encrypted authentication code and decrypt it (step **410**). That is, the encrypted authentication code may be received at antenna **106** and RF interface **306** and may be provided to authentication circuit **308**. Authentication circuit **308** may be provided a security authentication key (e.g., transponder system decryption key) from database **310**. The authentication circuit may use the authentication key to decrypt (e.g., unlock) the encrypted authorization code. The authentication key may be provided to the authentication circuit based on fob **102** unique identification code. For example, the encrypted authentication code may be provided along with the unique fob **102** identification code. The authentication circuit may receive fob **102** unique identification code and retrieve from the database **310** a transponder system decryption key correlative to the unique fob **102** identification code for use in decrypting the encrypted authentication code.

Once the authentication code is decrypted, the decrypted authentication code is compared to the authentication code provided by RFID reader **104** at step **402** (step **412**) to verify its authenticity. If the decrypted authorization code is not readable (e.g., recognizable) by the authentication circuit **308**, fob **102** is deemed to be unauthorized (e.g., unverified) (step **418**) and the operation of system **100** is terminated (step **420**). Contrarily, if the decrypted authorization code is recognizable (e.g., verified) by fob **102**, the decrypted authorization code is deemed to be authenticated (step **414**), and the transaction is allowed to proceed (step **416**). In one particular embodiment, the proceeding transaction may mean that fob **102** may authenticate RFID reader **104** prior to RFID reader **104** authenticating fob **102**, although, it should be apparent that RFID reader **104** may authenticate fob **102** prior to fob **102** authenticating RFID reader **104**.

It should be noted that in an exemplary verification process, the authorization circuit **308** may determine whether the unlocked authorization code is identical to the authorization code provided in step **402**. If the codes are not identical then fob **102** is not authorized to access system **100**. Although, the verification process is described with respect to identicality, identicality is not required. For example, authentication circuit **308** may verify the decrypted code through any protocol, steps, or process for determining whether the decrypted code corresponds to an authorized fob **102**.

Authentication circuitry **308** may additionally be in communication with a protocol/sequence controller **314** of similar operation and description as protocol/sequence controller **208** of FIG. **2**. That is, protocol/sequence device controller **314** may be configured to determine the order of operation of RFID reader **104** components. For example, FIG. **5** illustrates and exemplary decision process under which protocol/sequence controller **314** may operate. Protocol/sequence controller **314** may command the different components of RFID reader **104** based on whether fob **102** is present (step **502**). For example, if fob **102** is not present, then protocol/sequence controller **314** may command RFID reader **104** to provide an uninterrupted interrogation signal (step **504**). That is, the

protocol/sequence controller may command the authentication circuit **308** to provide an uninterrupted interrogation signal until the presence of fob **102** is realized. If fob **102** is present, protocol/sequence controller **314** may command RFID reader **104** to authenticate fob **102** (step **506**).

As noted above, authentication may mean that protocol/sequence controller **314** may command the authentication circuit **308** to provide fob **102** with an authorization code. If a response is received from fob **102**, protocol/sequence controller may determine if the response is a response to RFID reader **104** provided authentication code, or if the response is a signal requiring authentication (step **508**). If the signal requires authentication, then protocol/sequence controller **314** may activate the authentication circuit as described above (step **506**). On the other hand, if fob **102** signal is a response to the provided authentication code, then protocol/sequence controller **314** may command RFID reader **104** to retrieve the appropriate security key for enabling recognition of the signal (step **510**). That is, protocol/sequence controller **314** may command the authentication circuit **308** to retrieve from database **310** a security key (e.g., transponder system decryption key), unlock the signal, and compare the signal to the signal provided by RFID reader **104** in the authentication process (e.g., step **506**). If the signal is recognized, protocol/sequence controller **314** may determine that fob **102** is authorized to access the system **100**. If the signal is not recognized, then fob **102** is considered not authorized. In which case, protocol/sequence controller **314** may command the RFID controller to interrogate for authorized fobs (step **504**).

Once the protocol/sequence controller determines that fob **102** is authorized, protocol/sequence controller **314** may seek to determine if additional signals are being sent by fob **102** (step **514**). If no additional signal is provided by fob **102**, then protocol/sequence controller **314** may provide all the components of RFID reader **104** to remain idle until such time as a signal is provided (step **516**). Contrarily, where an additional fob **102** signal is provided, protocol/sequence controller **314** may determine if fob **102** is requesting access to the merchant point of sale terminal **110** (e.g., POS device) or if fob **102** is attempting to interrogate RFID reader **104** for return (e.g., mutual) authorization (step **518**). Where fob **102** is requesting access to a merchant point of sale terminal **110**, protocol/sequence controller **314** may command RFID reader **104** to open communications with point of sale terminal **110** (step **524**). In particular, protocol/sequence controller **314** may command the point of sale terminal communications interface **312** to become active, permitting transfer of data between RFID reader **104** and the merchant point of sale terminal **110**.

On the other hand, if the protocol/sequence controller determines that fob **102** signal is a mutual interrogation signal, then the protocol/sequence controller may command RFID reader **104** to encrypt the signal (step **520**). Protocol/sequence controller **314** may command the encryption authentication circuit **318** to retrieve from database **320** the appropriate encryption key in response to fob **102** mutual interrogation signal. Protocol/sequence controller **314** may then command RFID reader **104** to provide the encrypted mutual interrogation signal to fob **102**. Protocol/sequence controller **314** may command the authentication circuit **318** to provide an encrypted mutual interrogation signal for fob **102** to mutually authenticate. Fob **102** may then receive the encrypted mutual interrogation signal and retrieve from authentication circuitry **212** a RFID reader decryption key.

Although an exemplary decision process of protocol/sequence controller **314** is described, it should be understood that a similar decision process may be undertaken by protocol/sequence controller **208** in controlling the components of fob **102**. Indeed, as described above, protocol/sequence controller **314** may have similar operation and design as protocol/sequence controller **208**. In addition, to the above, protocol/sequence controllers **208** and **314** may incorporate in the decision process appropriate commands for enabling USB interfaces **222** and **316**, when the corresponding device is so connected.

Encryption/decryption component **318** may be further in communication with a secure account number database **320** which stores the security keys necessary for decrypting the encrypted fob account number. Upon appropriate request from protocol/sequence controller **314**, encryption/decryption component (e.g., circuitry **318**) may retrieve the appropriate security key, decrypt the fob account number and forward the decrypted account number to protocol sequence controller **314** in any format readable by any later connected POS device **110**. In one exemplary embodiment, the account number may be forwarded in a conventional magnetic stripe format compatible with the ISO/IEC 7813 standard. That is, in accordance with the invention, there is no need to translate or correlate the account number to traditional magnetic stripe format as is done with the prior art. The invention processes the transaction request directly, as if the card associated with the account has been presented for payment.

Upon receiving the account number in magnetic stripe format, protocol/sequence controller **314** may forward the account number to POS device **110** via a communications interface **312** and data link **122**, as best shown in FIG. **1**. POS device **110** may receive the decrypted account number and forward the magnetic stripe formatted account number to a merchant network **112** for processing under the merchant's business as usual standard. In this way, the present invention eliminates the need of a third-party server. Further, where POS device **110** receives a response from network **112** (e.g., transaction authorized or denied), protocol/sequence controller **314** may provide the network response to the RF module **302** for optically and/or audibly communicating the response to fob **102** user.

RFID reader **104** may additionally include a USB interface **316**, in communication with the protocol/sequence controller **314**. In one embodiment, the USB interface may be a RS22 serial data interface. Alternatively, RFID reader **104** may include a serial interface such as, for example, a RS232 interface in communication with the protocol/sequence controller **314**. The USB connector **316** may be in communication with a personalization system **116** (shown in FIG. **1**B) for initializing RFID reader **104** to system **100** application parameters. That is, prior to operation of system **100**, RFID reader **104** may be in communication with personalization system **116** for populating database **310** with a listing of security keys belonging to authorized fobs **102**, and for populating database **320** with the security keys to decrypt fob **102** account numbers placing the account numbers in ISO/IEC 7813 format. In this way, RFID reader **104** may be populated with a unique identifier (e.g., serial number) which may be used by fob authentication circuitry **210** to determine if RFID reader **104** is authorized to receive fob **102** encrypted account number.

FIG. **1**B illustrates an exemplary personalization system **100**B, in accordance with the present invention. In general, typical personalization system **100**B may be any system for initializing RFID reader **104** and fob **102** for use in system **100**A. With reference to FIG. **1**B, the similar personalization process for fob **102** may be illustrated. For example, personalization system **116** may be in communication with fob **102** via RF ISO 14443 interface **114** for populating fob database **212** with the security keys for facilitating authentication of

the unique RFID reader **104** identifier. In addition, personalization system **116** may populate on database **212** a unique fob **102** identifier for use by RFID reader **104** in determining whether fob **102** is authorized to access system **100**. Personalization system **116** may populate (e.g., inject) the encrypted fob **102** account number into fob database **214** for later providing to an authenticated RFID reader **104**.

In one exemplary embodiment, personalization system **116** may include any standard computing system as described above. For example, personalization system **116** may include a standard personal computer containing a hardware security module operable using any conventional graphic user interface. Prior to populating the security key information account number and unique identifying information into fob **102** or RFID reader **104**, the hardware security module may authenticate fob **102** and RFID reader **104** to verify that the components are authorized to receive the secure information.

FIGS. **6**A-B illustrate an exemplary flowchart of a personalization procedure which may be used to personalize fob **102** and/or RFID reader **104**. Although the following description discusses mainly personalization of fob **102**, RFID reader **104** may be personalized using a similar process. The personalization process, which occurs between the personalization system **116** and the device to be personalized (e.g., fob **102** or RFID reader **104**), may begin, for example at step **602**. Mutual authentication may occur between the personalization system **116** and the device to be authenticated in much the same manner as was described above with regard to fob **102** mutually authenticating with RFID reader **104**. That is, personalization system **116** may transmit a personalization system **116** identifier to the device to be authenticated which is compared by the device authentication circuitry **210**, **308** against personalization system identifiers stored in the device database **212**, **310**. Where a match does not occur (step **604**), the personalization process may be aborted (step **612**). Where a match occurs (step **604**), the personalization system may prepare a personalization file to be provided to the device to be personalized (step **606**). If the personalization system is operated manually, the personalization file may be entered into the personalization system **116** using any suitable system interface such as, for example, a keyboard (step **606**). Where the personalization system **116** operator elects to delay the preparation of the personalization files, the system **116** may abort the personalization process (step **610**). In this context, the personalization file may include the unique fob **102** or RFID reader **104** identifier, security key for loading into database **212** and **310**, and/or security keys for decrypting a fob account number which may be loaded in database **320**.

Fob **102** may be personalized by direct connection to the personalization system **116** via RF ISO/IEC 14443 interface **114**, or fob **102** may be personalized using RFID reader **104**. Personalization system **116** and RFID reader **104** may engage in mutual authentication and RFID reader **104** may be configured to transmit the fob personalization file to fob **102** via RF. Once fob **102** is presented to RFID reader **104** (steps **608**, **614**) for personalization, fob **102** and RFID reader **104** may engage in mutual authentication (step **614**). Where fob **102** is not presented to RFID reader **104** for personalization, the personalization process may be aborted (step **610**).

If fob **102** is detected, the personalization system **116** may create as a part of the personalization file, a unique identifier for providing to fob **102** (step **616**). The identifier is unique in that one identifier may be given only to a single fob. That is, no other fob may have that same identifier. The fob may then be configured and loaded with that identifier (step **618**).

The encrypted fob **102** account number may be populated into fob **102** in the same manner as is described with respect to fob **102** unique identifier. That is, personalization system **116** may pre-encrypt the account data (step **620**) and inject the encrypted account into fob database **214** (step **622**). The encrypted account data may be loaded (e.g., injected) into fob **102** using RFID reader **104** as discussed above.

Once the personalization file is populated into fob **102**, the populated information is irreversibly locked to prevent alteration, unauthorized reading and/or unauthorized access (step **624**). Personalization system **116** may then create a log of the personalization file information for later access and analysis by the personalization system **116** user (step **626**).

It should be noted that in the event the personalization process is compromised or interrupted (step **628**), personalization system **116** may send a security alert to the user (step **630**) and the personalization process may be aborted (step **612**). On the other hand, where no such compromising or interruption exists, personalization system **116** may be prepared to begin initialization on a second device to be personalized (step **632**).

FIGS. **7**A-B illustrate another exemplary embodiment of a personalization process which may be used to personalize RFID reader **104**. RFID reader **104** may be in communication with a personalization system **116** via RFID reader USB connection **316** (step **702**). Once connected, personalization system **116** may establish communications with RFID reader **104** and RFID reader **104** may provide personalization system **116** any RFID reader **104** identification data presently stored on RFID reader **104** (step **704**). In accordance with step **708**, where RFID reader **104** is being personalized for the first time (step **706**) RFID reader **104** and personalization system **116** may engage in mutual authentication as described above with respect to FIGS. **6**A-B. After the mutual authentication is complete, personalization system **116** may verify that RFID reader **104** is properly manufactured or configured to operate within system **100**. The verification may include evaluating the operation of RFID reader **104** by determining if the RFID reader will accept predetermined default settings. That is, personalization system **116** may then provide RFID reader **104** a set of default settings (step **708**) and determine if RFID reader **104** accepts those settings (step **712**). If RFID reader **104** does not accept the default settings, personalization system **116** may abort the personalization process (step **714**).

If personalization system **116** determines that the personalization process is not the first personalization process undertaken by RFID reader **104** (step **706**), personalization system **116** and RFID reader **104** may engage in a mutual authentication process using the existing security keys already stored on RFID reader **104** (step **710**). If authentication is unsuccessful (step **712**), personalization system **116** may abort the personalization process (step **714**).

Where personalization system **116** and RFID reader **104** successfully mutually authenticate, personalization system **116** may update RFID reader **104** security keys (step **716**). Updating the security keys may take place at any time as determined by a system **100** manager. The updating may take place as part of a routine maintenance or merely to install current security key data. The updating may be performed by downloading firmware into RFID reader **104** (step **718**). In the event that personalization system **116** determines in step **706** that RFID reader **104** is undergoing an initial personalization, the firmware may be loaded into RFID reader **104** for the first time. In this context, "firmware" may include any file which enables the RFID reader **102** to operate under system **100** guidelines. For example, such guidelines may be directed toward the operation of RFID reader protocol/sequence controller **314**.

Personalization system **116** may then determine if the personalization keys (e.g., security keys, decryption keys, RFID identifier) need to be updated or if RFID reader **104** needs to have an initial installation of the personalization keys (step **720**). If so, then personalization system **116** may download the personalization keys as appropriate (step **722**).

Personalization system **116** may then check RFID reader **104** to determine if fob **102** identifiers and corresponding security keys should be updated or initially loaded (step **724**). If no updating is necessary personalization system **116** may end the personalization procedure (step **732**). Contrarily, if personalization system **116** determines that fob **102** identifiers and corresponding keys need to be updated or installed, personalization system **116** may download the information onto RFID reader **104** (step **726**). The information (e.g., fob security keys and identifiers) may be downloaded in an encrypted format and RFID reader **104** may store the information in the RFID reader database **310** as appropriate (step **728**). Personalization system **116** may then create or update a status log cataloging for later use and analysis by personalization system **116** user (step **730**). Upon updating the status log, the personalization process may be terminated (step **732**).

It should be noted that, in some instances it may be necessary to repersonalize the RFID reader in similar manner as described above. In that instance, the personalization process described in FIGS. **7**A and **7**B may be repeated.

FIG. **8** illustrates an exemplary flow diagram for the operation of system **100**A. The operation may be understood with reference to FIG. **1**A, which depicts the elements of system **100**A which may be used in an exemplary transaction. The process is initiated when a customer desires to present fob **102** for payment (step **802**). Upon presentation of fob **102**, the merchant initiates the RF payment procedure via an RFID reader **104** (step **804**). In particular, the RFID reader sends out an interrogation signal to scan for the presence of fob **102** (step **806**). The RF signal may be provided via the RFID reader antenna **106** or optionally via external antenna **108**. The customer then may present fob **102** for payment (step **808**) and fob **102** is activated by the RF interrogation signal provided.

Fob **102** and RFID reader **104** may then engage in mutual authentication (step **810**). Where the mutual authentication is unsuccessful, an error message may be provided to the customer via the RFID optical and/or audible indicator (step **814**) and the transaction may be aborted (step **816**). Where the mutual authentication is successful (step **812**), RFID reader **104** may provide the customer with an appropriate optical and/or audible message (e.g., "transaction processing" or "wait") (step **818**). The fob protocol/sequence controller **208** may then retrieve from database **214** an encrypted fob account number and provide the encrypted account number to RFID reader **104** (step **820**).

RFID reader **104** may then decrypt the account number and convert the account number into magnetic stripe (ISO/IEC 7813) format (step **822**) and provide the unencrypted account number to merchant system **130** (step **828**). In particular, the account number may be provided to POS **110** device for transmission to merchant network **112** for processing. Exemplary processing methods according to the present invention are discussed with respect to FIGS. **10-13**, shown below. Upon processing, POS device **110** may then send an optical and/or audible transaction status message to RFID reader **104** (step **830**) for communication to the customer (step **832**).

The methods for processing the transactions may include one of several formats as required by the fob issuer. For example, one processing method may include processing the transaction under a preloaded fob format wherein a payment value (e.g., monetary value, reward points value, barter points value, etc.) may be preloaded into a preloaded value account or data file prior to permitting usage of the fob. In this way, the user may be permitted to set aside a payment amount for transactions for goods and services using the fob. During processing of the transaction, approval of the transaction may involve comparing the transaction amount to the amount stored (or remaining) in the preloaded value data file. Comparison may be made by a preloaded value processing system wherein the preloaded value processing system may compare the transaction amount to be processed to the preload value data file. Where the transaction amount exceeds the amount stored in the preloaded value account, the preloaded value processing system may deny authorization for completion of the transaction, request that the user increase the value in the data file, request another form of payment to satisfy all or a portion of the transaction amount, and/or any other means to satisfy the associated financial institution of payment. Where the transaction amount does not exceed the amount stored in the preloaded value data file account, the preloaded value processing system may provide for authorization of the transaction.

An exemplary preloaded value processing system **1000** is shown with respect to FIG. **10**. Preloaded value processing system **1000** may include fob **102** including transponder **114**, which is in communication with a merchant system **130** via RFID reader **104** or computer interface **134** as is described with respect to FIG. **1**A. The merchant system may be in communication with an issuer system **1010**, where issuer system **1010** may be maintained by any entity (e.g., non-financial or financial institution, American Express®, Visa® and/or MasterCard®, etc.) which permits fob **102** user to store a preload value amount in a preloaded value account (e.g., data file) maintained on an issuer database **1012** of similar construction as database **212**. Issuer system **1010** may further include one or more process servers for processing a fob transaction. As shown, POS device **110** (included in merchant system **130**) may be in communication with an issuer account server (IAS) **1014** for receiving the fob account information from POS device **110**. IAS **1014** may be in further communication with a preloaded value authorization server (PLAS) **1016** for processing transactions involving a preloaded value fob. PLAS **1016** may be in further communication with issuer database **1012** for retrieving funds from the preloaded value data file (not shown) which are used for satisfying the preloaded fob or merchant transaction request. In this instance, the preloaded value data file may be included on database **1012** as, for example, one or more sub-files.

As used herein, the term "issuer" or "account provider" may refer to any entity facilitating payment of a transaction using a fob, and may include systems permitting payment using at least one of a preloaded and non-preloaded fob. Typical issuers may be, for example, American Express®, MasterCard®, Visa, Discover®, and the like. In the preloaded value processing context, an exchange value (e.g., money, rewards points, barter points, etc.) may be stored in a preloaded value data file for use in completing a requested transaction. In one embodiment, the exchange value is not be stored on the fob itself. Further, the preloaded value data file may be debited the amount of the transaction, so the preloaded value account may be replenished. As described more fully below, the preloaded value system platform may be used to complete "direct link" transactions. In which case, the preloaded value account may function as a place holder and may store a zero value.

The preloaded value data file may be any conventional data file configuration for storing a value (e.g., monetary, rewards points, barter points, etc.) which may be exchanged for goods or services. In that regard, the preloaded value data file may have any configuration as determined or desired by the issuer system **1010**.

In exemplary operation, fob identifying information (e.g., account number or fob marker) may be provided to POS device **110** in similar manner as was discussed with respect to FIG. **1**A. That is, fob **102** may be presented to merchant system **130** via RFID reader **104** or a computer interface **134**, which may provide the fob identifying information in Track 1 or Track 2 format, or any format recognizable by POS device **110** and/or issuer system **1010**. POS device **110** included in merchant system **130** may receive fob **102** identifying information and provide fob **102** identifying information along with the transaction identifying information (e.g., amount, quantity, merchant identification, etc.) to issuer system **1010** for authorization. Merchant system **130** may additionally include a merchant system marker or identifier for indicating a merchant system identity. Merchant system **130** may combine fob **102** identifying information, the merchant identifying information, and/or the transaction identifying information, into a merchant transaction request for providing to the issuer system **1010**.

IAS **1014** may receive the transaction and fob identifying information (or merchant transaction request) and suitably recognize that the transaction is being requested relative to a preloaded value account associated with a preloaded fob. That is, IAS **1014** may recognize that the user has presented a preloaded fob **102** for payment. Recognition of fob **102** as a preloaded fob may mean that the fob identifying information includes a marker or identifier indicating that the fob is associated with a preloaded value data file. Upon recognition of the marker, IAS **1014** may forward transaction and fob identifying information to PLAS **1016** for processing. PLAS **1016** may compare the transaction amount to the value stored or remaining in the preloaded value to determine if authorization should be granted or denied. Where the transaction amount exceeds the value stored in the preloaded value data file, PLAS **1016** may forward a transaction denied message to IAS **1014** for providing to the merchant system **130**, or the PLAS may facilitate a request that the user increase the value in the data file, request another form of payment to satisfy all or a portion of the transaction amount, and/or any other means to satisfy the associated financial institution of current or future payment. Alternatively, where the transaction amount is less than or equal to the value stored in the preload value data file PLAS **1016** may deduct from the preloaded value data file the necessary amount for satisfaction of the transaction.

As noted above, in one exemplary embodiment of the present invention, PLAS **1016** may provide a transaction denied message to IAS **1014** for various financial security reasons, such as where the amount stored in the preloaded value account is less than required for satisfying the merchant or fob transaction request. In this instance, where the preloaded value falls below a predetermined minimum level (e.g., minimum depletion level), it may be necessary for the fob user to reload the preloaded value data file. Reloading of the preloaded value account may take place manually (e.g., by the fob user telephonically or online) or may take place automatically when the value stored in the preloaded value data file is depleted to a predefined level. Where the reloading is done automatically, reloading may occur under rules established by the fob issuer or owner. For example, reloading may occur at preselected time intervals, when the value stored is below a predetermined amount, until a maximum number of reloads in a predetermined time period has occurred or until a maximum reload amount is reached in a predetermined time period.

In another exemplary operation, processing system **1000** may be operated offline. For example, merchant system **130** may be offline with respect to issuer system **1010**. That is, transactions may be approved at merchant system **130**, prior to the transaction identifying information being transferred to the issuer system. Instead, merchant system **130** may be provided an approval protocol for use in evaluating the merchant transaction request. For example, the approval protocol may provide for transaction approval where the transaction is below a certain amount, includes a particular merchant or goods or service, or is requested from a particular location or the like. Once the offline transaction is completed, the merchant may seek satisfaction of the transaction at a later time-period by submitting the transaction to the issuer individually, in batch, or under any submission processing determined by the merchant.

For offline transactions, fob **102** may include a counter (not shown) which may track the number of offline transactions. Once a predetermined number of transactions are attempted, the counter may be used to facilitate disenabling fob **102** usage. At which point fob **102** user may be required to perform an online transaction whereby the counter may be reset, again permitting offline usage of the fob. As can be understood, requiring online usage following a predetermined number of offline usages may function as an additional security measure.

FIGS. **11**A and **11**B depict exemplary preloading and reloading processes which may be performed in accordance with the present invention. The preloading and reloading processes may be preformed using one or more servers (e.g., PLAS **1016**) in communication with a funding source **1104**. Although the processes are demonstrated using a PLAS **1016**, it is contemplated that any server configured for establishing and managing data files may be used. However, to facilitate further understanding of the invention, the preloading and reloading aspects of the invention are described with reference to PLAS **1016**.

PLAS **1016** may be used to establish on the server or on a database (e.g., database **1012**) a preloaded value account (e.g., data file) (**1106**). The preload value account may be funded or maintained by a fob issuer/account provider which may establish a credit, charge, debit, rewards value account, loyalty account, or the like, in connection with a charge or credit card (e.g., Visa, MasterCard, American Express, Discover, etc.), debit or direct debit authorization (DDA) system.

The preloaded value account may be established to at least a predetermined minimum preload amount or value (e.g., minimum preload level) as determined by the account provider and/or the fob user or owner. In this context, the predetermined minimum value (e.g., minimum preload value) required to establish the preloaded value account may vary with respect to a particular fob user. The preloaded value account may be loaded (e.g., preloaded or reloaded) from funds received from one of a funding source **1104** (American Express, Visa, MasterCard, Discover, fuel cards, or the like). Further, the preloaded value account may be loaded with value received from loyalty or rewards points provider. To facilitate the understanding of the invention, the loyalty or rewards point provider may be referred to herein as a funding source. Thus, PLAS **1016** may communicate with the funding source **1104** to obtain funds or value for loading and/or reloading the preloaded value account (**1108**).

FIG. **11**B shows an exemplary reloading process in accordance with the invention. During operation, a consumer may

present to merchant system **130** the prepaid fob **102** for purchasing goods or services (**1110**). The preloaded value account is then depleted the value amount paid to merchant system **130**. The process for purchasing goods may be repeated until the value stored in the preloaded value account equals or is less than a minimum level balance (e.g., minimum depletion level). The minimum depletion level may be predetermined by the fob user or fob issuer, and may be the minimum value permitted to be stored in the preloaded value account before the file is to be reloaded.

Once the preloaded value data is depleted such that the minimum depletion level is reached, PLAS **1016** may trigger an automatic reload to reload the preloaded value account from funds retrieved from the funding source **1104** (**1112**). The amount of funds retrieved may be sufficient for loading the preloaded value account to the minimum amount described above or to some other predetermined reload value. In one exemplary embodiment, PLAS **1016** may trigger automatic reloading where a predetermined minimum depletion level (e.g., "minimum level balance") is reached. That is, the preloaded value account may not be entirely depleted to zero value before automatic reloading occurs. In this instance, PLAS **1016** may charge the funding necessary for automatic reloading against the available funds at funding source **1104**. In another exemplary embodiment, the automatic reloading may occur where the transaction exceeds the amount stored in or remaining in the preloaded value account. In this way, the preloaded value account may be restored to an amount necessary for completion of the transaction. For example, where automatic reloading restores the preloaded value account to a value suitable for transaction completion, the preloaded value account may be automatically reloaded prior to processing the transaction.

In another exemplary embodiment, automatic reloading may occur based on different user or issuer automatic reload criteria. Other automatic reload criteria may include, but are not limited to, reloading until a defined maximum load amount in a defined time period is reached, reloading at a selected reoccurring time interval (e.g., once a month), reloading as permitted until a defined maximum number of reloads in a specified time period is reached, or reloading until a defined maximum reload amount is reached in a specified time period. In some instances, reloading may be accomplished manually, such as, for example, when the fob user contacts the issuer telephonically or via user interface to provide a specified funding criteria and funding source for use in reloading the preloaded value account.

In yet another exemplary embodiment, the preloaded value transaction processing system may permit approval of a transaction where the transaction value exceeds the preloaded value amount stored in the preloaded value account. That is, the preloaded fob may be used for purchases exceeding the preloaded value amount provided that the charge submitted by the merchant is less than or equal to the maximum reload amount permitted plus the amount stored on the card at the time the charge is submitted.

In another exemplary embodiment, the preloaded value system may approve transactions based on a particular merchant's transaction processing protocol. Where the issuer has reviewed and/or approved a merchant's transaction processing method, the system may take the method in consideration in determining whether to approve a merchant's transaction request. For example, a merchant's transaction processing method may include the merchant submitting transaction requests which exceed the preloaded value amount, but the actual charge may be less than or equal to the preloaded value amount. Under this transaction processing method a merchant, such as, for example, a gasoline merchant, may seek pre-approval of an anticipated gasoline fueling amount. Neither the consumer nor the merchant may know the exact final value of the purchase, especially, for example, where the consumer decides to fill his automobile gas tank or purchase non-fuel items. Thus, the merchant may submit a transaction request which may be higher than the final amount of the transaction. The merchant may submit the transaction request in real-time or at a later time period in a similar manner as is described above with respect to offline transaction request processing. In either on line or off line processing, the preloaded value transaction processing system may still be configured to approve the transaction request. The processing system may recognize that a transaction came from a particular merchant and institute a predetermined approval protocol correlative to that merchant, since the approval protocol may include information that the merchant is sending a transaction request exceeding the actual charge.

The transaction processing system may use any one of the acceptable techniques for identifying merchants, such as recognition of the merchant ID, or a marker appended to the transaction, or the like. The processing system may correlate the merchant ID with a merchant protocol for requesting a transaction approval of an amount greater than the preloaded value (or reload value), and approve the merchant request accordingly.

In accordance with an alternate exemplary embodiment of a preloaded value processing system **1000**, upon receiving the transaction request from the IAS **1014**, PLAS **1016** may evaluate the transaction request based upon several risk criteria established by the issuer for either online or offline transactions. If all the criteria are successfully met, then PLAS **1016** may send authorization of the transaction (e.g., "transaction granted") to IAS **1014** for providing to merchant system **130**. Simultaneous with or subsequent to, providing the transaction authorization to the IAS **1014**, PLAS **1016** may seek satisfaction of the transaction from the fob value account maintained on the account provider database **1012**. The transaction request may be provided to IAS **1014** for processing. That is, IAS **1014** may seek to deduct the transaction value from the balance of the amount stored in the preloaded value account.

FIG. **12** depicts an exemplary embodiment of another transaction processing system ("direct link" system) **1200** in accordance with the present invention. More particularly, FIG. **12** depicts a direct link system **1200** which may be used to process a merchant transaction request. In this context, a direct link system may be any system which facilitates satisfaction of a transaction request using a fob or other presentable medium (credit card, charge card, debit card, or the like) directly linked to an account which stores an exchange value (e.g., money, credit or charge, or rewards points, etc.). In this instance, the preloaded value account may not be preloaded as described above. Further, the preloaded value account may be linked to a contact financial product such as a credit, debit, and/or DDA card, and the like, which may be presented for payment of goods and services. In this regard, the fob (here called "direct link fob") and the card are associated with the same funding source and the user or merchant may seek satisfaction of a transaction from the funding source independent of whether the direct link fob or card is used. In the exemplary direct link system **1200**, the direct link fob **102** user may not establish a preloaded value account with value. Instead, the preloaded value account may perpetually store a zero value or fob **102** may be associated with a fob transaction account which may be used to provide payment to the mer-

chant for goods and services where the account may be a credit, debit, loyalty account or the like.

In accordance with an exemplary embodiment of the invention, a transaction request associated with a direct link fob **102** may be processed using the preloaded value transaction system processing described above. However, as noted, in this instance the preloaded value account is used as a place holder storing a zero value. A transaction account containing a transaction account value which is associated with the direct link fob is treated as the funding source for satisfying direct link transactions. In this instance, the transaction may be satisfied according to a fob user or issuer predefined protocol or criteria.

As shown, merchant system **130** may be in communication with an issuer system **1010** for receiving a merchant transaction request. More particularly, POS device **110** may be in communication with an issuer server, such as, for example, an issuer account server (IAS) **1014** for receiving the merchant and/or transaction identifying information. IAS **1014** may be in further communication with a PLAS **1016** for processing the merchant transaction request. In some instances PLAS **1016** may be in further communication with a second IAS **1202**, although a second IAS **1202** may not be required where one or more of the existing servers may perform the functions of IAS **1202** described below. However, the IAS **1202** is included herein to simplify the understanding the operation of this exemplary embodiment.

In exemplary operation of system **1200**, the direct link fob identifying information (e.g., fob identifier or account number) may be provided to POS device **110** in similar manner as was discussed with respect to FIG. **1**A. That is, the direct link fob **102** may be presented to merchant system **130** via RFID reader **104** or computer interface **134**, which may provide the direct link fob **102** identifying information in Track 1 or Track 2 format. POS device **110** included in merchant system **130** may receive the direct link fob **102** identifying information and provide the direct link fob **102** identifying information along with the transaction identifying information (e.g., amount, quantity, merchant identification, etc.) to issuer system **1010** for authorization.

IAS **1014** may receive the transaction and fob identifying information and recognize that the transaction as being requested relative to a direct link fob **102**. Recognition of the direct link fob **102** in this instance may mean that the direct link fob **102** identifying information includes a marker or identifier indicating that the fob is associated with a zero value preloaded value account. Upon recognition of the marker, IAS **1014** may forward the transaction and fob identifying information to PLAS **1016** for processing.

In similar manner as was described with respect to the operation of the preloaded value processing system of FIG. **10**, PLAS **1016** may evaluate the transaction request based upon several risk criteria established by the issuer. Exemplary risk criteria may include, but are not limited to, consideration of transaction amount limits for a specified time period, fob user usage history, fund or reserve limits, pre-determined re-funding rules, user defined limits, or any similar evaluative criteria. If all the criteria are successfully met, then PLAS **1016** may send authorization of the transaction (e.g., "transaction granted") to IAS **1014** for providing to merchant system **130**. The transaction authorization may be provided to merchant system **130** based on evaluation of the risk criteria and not upon the value present in preloaded value account or direct link transaction account storing value relative to the direct link fob.

After providing the transaction authorization to the IAS **1014**, PLAS **1016** may seek authorization of the transaction against the direct link fob account (e.g., transaction account) which is maintained on issuer database **1012**, and which is funded by value received from funding source **1104**. The authorization request may be provided to IAS **1202** for approval which may retrieve the necessary value from the direct link fob account. For example, where the direct link fob account is a charge or credit account, PLAS **1016** may request authorization from the second IAS **1202** and IAS **1202** may assess the transaction amount against the direct link fob account on database **1012**. IAS **1202** may seek to record the amount of the transaction in the direct link fob usage history data file for payment at the end of a billing cycle (e.g., charge account), or the amount may be recorded on the fob direct link fob usage data file for payment at a date later than the end of the billing cycle (e.g., credit account).

In an alternative operation PLAS **1016** may assess the transaction amount against the direct link fob account, without use of a second IAS **1202**. Whether the transaction is processed using a second IAS **1202**, it is to be understood that value may not be immediately transferred to the merchant system from the direct link fob account for satisfying the transaction. Instead, the direct link fob issuer may guarantee satisfaction of the merchant transaction by, for example, request until a certain value is retrieved from the direct link fob account at the end of the billing cycle or later. That is, PLAS **1016** may provide authorization of the transaction, but may not retrieve the necessary value for satisfying the transaction until after the merchant provides a request for settlement to the issuer system.

In yet another exemplary transaction processing system **1300** depicted in FIG. **13**, merchant system **130** may provide a batch file containing multiple fob transaction requests to be processed to a process server **1302** where the multiple fob transactions may include both preloaded value and direct link transaction request. The system **1300** may include a process server **1302** which distinguished between preloaded value and direct link transaction requests. That is, process server **1302** may be used for separating the fob transactions which are associated with a preloaded fob account and those that are not associated with a preloaded fob account, as discussed more fully below. Process server **1302** may further be in communication with IAS **1014** for seeking settlement of the transaction. IAS **1014** may process the transaction request in accordance with the direct link transaction process or the preloaded value transaction platform described above.

In exemplary operation of system **1300**, process server **1302** may receive the settlement file and identify the files according to the nature of the transaction request. For example, process server **1302** may place markers on the files received and create sub-files of transaction requests relative to the type of fob used in the transaction (e.g., preloaded fob, and direct link fob associated with a charge or credit account). The process server may create the sub-files relative to the file markers. Process server **1302** may create a first fob transaction file for merchant payables and a second fob transaction file for accounts receivable to be forwarded to IAS **1014** for processing. Where the sub-file includes merchant payable, process server **1302** may provide funds to the merchant for payment of the transaction, where the funds provided may be equivalent to the transaction amount minus discount revenues. The funds may be retrieved from the funding source for providing to the merchant. Alternatively, process server **1302** may create a second fob transaction file for accounts receivable payments and forwarded the second fob transaction file to IAS **1014**. IAS **1014** may then process the transaction request according to the processes described in FIGS. **10** and **12**. That is, IAS **1014** may distinguish the preloaded

fob transaction requests from those associated with the direct link fob and process the transactions accordingly.

Considering the operation of the various transaction processing systems described above, it can be seen that the transaction processing systems described may distinguish when a preloaded fob is used, when a card associated with a fob is used, or when an account associated with a preloaded fob is reloaded. In that regard, the present invention may be used to reward points depending on the nature of the fob usage. The points (e.g., loyalty points) may be stored in a points or rewards account maintained on the issuer database (e.g., database **1012**). The rewards points may then later be redeemed from the rewards account for exchange for goods and services as desired by the fob user. For more information on loyalty systems and transaction systems, see, for example, U.S. patent application Ser. No. 09/836,213, filed on Apr. 17, 2001, by inventors Voltmer, et al., and entitled "System And Method For Networked Loyalty Program"; U.S. Continuation-In-Part patent application Ser. No. 10/027,984, filed on Dec. 20, 2001, by inventors Ariff, et al., and entitled "System And Method For Networked Loyalty Program"; U.S. Continuation-In-Part patent application Ser. No. 10/010,947, filed on Nov. 6, 2001, by inventors Haines, et al., and entitled "System And Method For Networked Loyalty Program"; the Shop AMEX™ system as disclosed in Ser. No. 60/230,190, filed Sep. 5, 2000; the MR as Currency™ and Loyalty Rewards Systems disclosed in Ser. No. 60/197,296, filed on Apr. 14, 2000, Ser. No. 60/200,492, filed Apr. 28, 2000, Ser. No. 60/201,114, filed May 2, 2000; a stored value card as disclosed in Ser. No. 09/241,188, filed on Feb. 1, 1999; a system for facilitating transactions using secondary transaction numbers disclosed in Ser. No. 09/800,461, filed on Mar. 7, 2001, and also in related provisional application Ser. No. 60/187,620, filed Mar. 7, 2000, Ser. No. 60/200,625, filed Apr. 28, 2000, and Ser. No. 60/213,323, filed May 22, 2000, all of which are herein incorporated by reference. Other examples of online membership reward systems are disclosed in Netcentives U.S. Pat. No. 5,774,870, issued on Jun. 30, 1998, and U.S. Pat. No. 6,009,412, issued on Dec. 29, 1999, both of which are hereby incorporated by reference.

As noted, in one instance, points may be provided when the fob is used in addition to when the card associated with the fob is used. For example, IAS **1014** may recognize that a fob is being used and award points (e.g., loyalty points) to the rewards account assigned to the fob user or associated with the fob. The loyalty points may be awarded based on any criteria as determined by the fob issuer. Exemplary rewarding criteria may include rewarding points for, for example, frequency of fob usage, amount of individual purchase using the fob, the total amount of purchases in a given time period, location of merchant, type of merchant, or any such criteria for incenting fob usage.

Where the fob is associated with a preloaded value account such as that described with respect to FIG. **10**, points may be awarded for account reloading. That is, IAS **1014** may place award points in the rewards account relative to the amount loaded or reloaded as required. Further IAS **1014** may place reward points in the rewards account relative to usage of the fob at a particular merchant or for a particular transaction.

It should be noted that the transaction account associated with fob **102** may include a usage restriction, such as, for example, a per purchase spending limit, a time of day use, a day of week use, certain merchant use and/or the like, wherein an additional verification is required when using the fob outside of the restriction. The restrictions may be personally assigned by fob **102** user, or the account provider. For example, in one exemplary embodiment, the account may be established such that purchases above $X (i.e., the spending limit) must be verified by the customer. Such verification may be provided using a suitable personal identification number (PIN) which may be recognized by fob **102** or a payment authorization center (not shown) as being unique to fob **102** holder (e.g., customer) and the correlative fob **102** transaction account number. Where the requested purchase is above the established per purchase spending limit, the customer may be required to provide, for example, a PIN, biometric sample and/or similar secondary verification to complete the transaction. That is, for example, fob **102** may enter the unique PIN in a conventional keypad at merchant system **130** or RFID reader **104**. The PIN may be provided to the authorization center for comparison with a correlative PIN stored on the issuer system. Alternatively, the PIN may be provided to fob **102** via RFID reader **104**. Fob **102** may verify the PIN by comparing the PIN to a correlative PIN stored on, for example, secure memory **212**.

Where a verification PIN is used as secondary verification the verification PIN may be checked for accuracy against a corroborating PIN which correlates to fob **102** transaction account number. The corroborating PIN may be stored locally (e.g., on fob **102**), or may be stored on a database (**1012**) at the payment authorization center. The payment authorization center database may be any database **1012** maintained and operated by fob **102** transaction account provider.

The verification PIN may be provided to POS device **110** using a conventional merchant (e.g., POS) PIN key pad **118** in communication with POS device **110** as shown in FIG. **1**A, or a RFID keypad in communication with RFID reader **104**. PIN keypad may be in communication with POS device **110** (or alternatively, RFID reader **104**) using any conventional data link described above. Upon receiving the verification PIN, RFID reader **104** may seek to match the PIN to the corroborating PIN stored on RFID reader **104** at database **310** or **320**. Alternatively, the verification PIN may be provided to a payment authorization center to determine whether the PIN matches the PIN stored on the payment authorization center database which correlates to fob **102** account. If a match is made, the purchase may no longer be restricted, and the transaction may be allowed to be completed.

In an alternate embodiment, verification of purchases exceeding the established spending limit may involve biometrics circuitry included in fob **102**. FIG. **9** is a schematic block diagram of an exemplary fob **102** wherein fob **102** includes a biometric security system **902**. Biometric security system **902** may include a biometric sensor **904** for sensing the fingerprint of fob **102** user. Biometric sensor **904** may be in communication with a sensor interface/driver **906** for receiving the sensor fingerprint and activating the operation of fob **102**. In communication with biometric sensor **904** and sensor interface **906** may be a battery **903** for providing the necessary power for operation of the biometric security system components.

In one exemplary application of fob **102** including biometric security system **902**, the customer may place his finger on the biometric sensor to initiate the mutual authentication process between fob **102** and RFID reader **104**, or to provide secondary verification of the user's identity. The sensor fingerprint may be digitized and compared against a digitized fingerprint stored in a database (e.g., security database **212**) included on fob **102**. Such comparison step may be controlled by protocol/sequence controller **208** and may be validated by authentication circuit **210**. Where such verification is made, the mutual authentication between fob **102** and RFID reader **104** may begin, and the transaction may proceed accordingly. Alternatively, the comparison may be made with a digitized

fingerprint stored on a database maintained by fob **102** transaction account provider system (not shown). The digitized fingerprint may be verified in much the same way as is described above with respect to the PIN.

In one exemplary application of fob **102** including biometric security system **902**, system **902** may be used to authorize a purchase exceeding the established per purchase spending limit. In this case, where the customer's intended purchase exceeds the spending limit, the customer may be asked to provide assurance that the purchase is authorized. Accordingly, the customer may provide such verification by placing his finger over biometric sensor **904**. Biometric sensor **904** may then digitize the fingerprint and provide the digitized fingerprint for verification as described above. Once verified, fob **102** may provide a transaction authorized signal to RF transponder **202** (or alternatively to transponder **220**) for forwarding to RFID reader **104**. RFID reader **104** may then provide the transaction authorized signal to POS device **110** in similar manner as is done with conventional PIN driven systems and POS device **110** may process the transaction under the merchant's business as usual standard.

Additional methods and systems for biometric security for system **100** will be discussed further herein.

In accordance with another exemplary embodiment of the invention, the fob user is provided limited access to a fob user data file maintained on an issuer system for managing the fob usage and fob user information. User may have access over the phone, online, or offline. The fob user may access the fob user data file to change, for example, demographic information (e.g., fob user address, phone number, email address, or the like), the funding source (e.g., credit account, charge account, rewards account, barter account, etc.) associated with the fob, view the transaction history, etc. In addition, the fob user may be permitted to load or reload the account or alter automatic reload parameters (e.g., amount to reload, period for reloading, etc.). Where more than one fob **102** is correlated to a transaction account, the user may be provided similar access to the data files corresponding to the additional fobs.

With reference to FIG. **1**A, the fob user may connect fob **102** to computer interface **134** via the USB interface **132**. The fob user may then use computer interface **134** to access the fob user data file via network **136**. In particular, network **136** may be in communication with an issuer system (e.g. system **1010** of FIG. **10**) and may be provided limited access to an issuer server (e.g., server **1014**) for managing the fob. Issuer server **1014** may be in communication with an issuer system database (e.g., **1012**) which stores the information to be managed relative to the user fob user data file. The changes made to the fob user data file by the fob user may be made in real-time, after a brief delay, or after an extended delay. In one instance, changes may be stored in a batch changes file on the issuer database for later batch processing.

In another exemplary embodiment of the present invention, system **100** may be configured with one or more biometric scanners, processors and/or systems. A biometric system may include one or more technologies, or any portion thereof, such as, for example, recognition of a biometric. As used herein, a biometric may include a user's voice, fingerprint, facial, ear, signature, vascular patterns, DNA sampling, hand geometry, sound, olfactory, keystroke/typing, iris, retinal or any other biometric relating to recognition based upon any body part, function, system, attribute and/or other characteristic, or any portion thereof. Certain of these technologies will be described in greater detail herein. Moreover, while some of the examples discussed herein may include a particular biometric system or sample, the invention contemplates any of the biometrics discussed herein in any of the embodiments.

The biometric system may be configured as a security system and may include a registration procedure in which a user of transaction instrument (e.g., fob **102**) proffers a sample of his fingerprints, DNA, retinal scan, voice, and/or other biometric sample to an authorized sample receiver (ASR). An ASR may include a local database, a remote database, a portable storage device, a host system, an issuer system, a merchant system, a fob issuer system, an employer, a financial institution, a non-financial institution, a loyalty point provider, a company, the military, the government, a school, a travel entity, a transportation authority, a security company, and/or any other system or entity that is authorized to receive and store biometric samples and associate the samples with specific biometric databases and/or transaction instruments (e.g., fobs **102**). As used herein, a user of a fob, fob user, or any similar phrase may include the person or device holding or in possession of the fob, or it may include any person or device that accompanies or authorizes the fob owner to use the fob.

FIG. **14** illustrates an exemplary registration procedure in accordance with the present invention. In one embodiment, a fob user may contact an ASR to submit one or more biometric samples to an ASR (step **1401**). The fob user may contact the ASR and submit a sample in person, through a computer and/or Internet, through software and/or hardware, through a third-party biometric authorization entity, through a kiosk and/or biometric registration terminal, and/or by any other direct or indirect means, communication device or interface for a person to contact an ASR.

A fob user may then proffer a biometric sample to the ASR (step **1403**). As used herein, a biometric sample may be any one or more of the biometric samples or technologies, or portion thereof, described herein or known in the art. By proffering one or more biometric samples, a biometric may be scanned by at least one of a retinal scan, iris scan, fingerprint scan, hand print scan, hand geometry scan, voice print scan, vascular scan, facial and/or ear scan, signature scan, keystroke scan, olfactory scan, auditory emissions scan, DNA scan, and/or any other type of scan to obtain a biometric sample. Upon scanning the sample, the system may submit the scanned sample to the ASR in portions during the scan, upon completing the scan or in batch mode after a certain time period. The scanned sample may include a hardcopy (e.g., photograph), digital representation, an analog version or any other configuration for transmitting the sample. The ASR receives the sample and the ASR may also receive copies of a fob user's biometric data along with the sample or at a different time (or within a different data packet) from receiving the sample.

The ASR and/or fob user **102** may correlate and/or register the sample with fob user information to create a data packet for the sample and store the data packet in digital and/or any storage medium known in the art. As used herein, a data packet may include the digitized information relating to at least one of a biometric sample, a registered biometric sample, a stored biometric sample, a proffered biometric, a proffered biometric sample, user information, transponder information, and/or any other information. The terms "data packet," "biometric sample," and "sample" may be used interchangeably. As used herein, registered samples may include samples that have been proffered, stored and associated with user information. By storing the data packet in digital format, the ASR may digitize any information contained in one of the biometric scans described herein. By storing the data packet in any storage medium, the ASR may print and/or store any

biometric sample. Hardcopy storage may be desirable for back-up and archival purposes.

The biometric sample may also be associated with user information to create a data packet (step **1405**). The sample may be associated with user information at any step in the process such as, for example, prior to submission, during submission and/or after submission. In one embodiment, the user may input a PIN number or zip code into the POS terminal, then scan the biometric to create the biometric sample. The local POS system may associate the biometric sample data with the PIN and zip code, then transmit the entire packet of information to the ASR. In another embodiment, the POS may facilitate transmitting the sample to an ASR, and during the transmission, the sample may be transmitted through a third system which adds personal information to the sample.

The information associated with the biometric sample may include any information such as, for example, fob user information, fob **102** information, fob **102** identifier information, fob **102** vender information, fob **102** operability information, and/or fob **102** manufacturing information. Fob **102** information is not limited to transponder information and may include information related to any transaction instrument such as smart cards, credit cards, debit cards, merchant-specific cards, loyalty point cards, cash accounts and any other transaction instruments and/or accounts. The fob user information may also contain information about the user including personal information—such as name, address, and contact details; financial information—such as one or more financial accounts associated with the fob user; loyalty point information—such as one or more loyalty point accounts (e.g., airline miles, charge card loyalty points, frequent diner points) associated with the fob user; and/or non-financial information—such as employee information, employer information, medical information, family information, and/or other information that may be used in accordance with a fob user.

For example, fob user may have previously associated a credit card account, a debit card account, and a frequent flier account with his biometric sample which is stored at an ASR. Later, when fob user desires to purchase groceries, fob user may submit his biometric sample while using fob **102** for the purchase at a POS. The POS may facilitate sending the biometric sample to the ASR such that the ASR authorizes the biometric sample and checks a look-up table in the ASR database to determine if any information is associated with the sample. If information (e.g., financial accounts) is associated with the sample, the ASR may transmit the information to the POS terminal. The POS terminal may then present fob user with a list of the three accounts associated with the biometric sample. Fob user and/or a merchant may then chose one of the accounts in order to continue and finalize the transaction.

In another embodiment, fob user may associate each account with a different biometric sample. For example, during registration, fob user may submit a sample of his right index fingerprint, and request that the system primarily associate this sample with a particular credit card account. Fob user may additionally submit a sample of his left index fingerprint and request that the system primarily associate the sample with a particular debit account. Additionally, fob user may submit his right thumbprint and request that the system primarily associate that sample with a particular frequent flier account. By "primarily" associating a sample with an account, the system initially associates the sample with that account. For example, fob user submitting his right index fingerprint for a financial transaction may have money for the transaction taken from his credit card account. Fob user may additionally specify which accounts should be secondarily associated with a sample. For example, fob user may have a debit card account secondarily associated with his right index fingerprint. As a result, if fob user submits his right index fingerprint for a transaction, and the primary account associated with the sample is overdrawn or unavailable, the secondary account may be accessed in order to further the transaction.

While primary and secondary account association is described herein, any number of accounts may be associated with a sample. Moreover, any hierarchy or rules may be implemented with respect to the association. For example, the fob user may instruct the system to access a debit card account when it receives a right index fingerprint sample, the purchase qualifies for loyalty points with a certain airline and the purchase amount is less than $50. The fob user may additionally instruct the system to access a credit card account if it receives a right index fingerprint sample, the purchase does not qualify for airline miles and the purchase amount is greater than $50. Further, while fingerprint samples are discussed herein, any biometric sample may have one or more accounts associated with it and may be used to facilitate a transaction using any of the routines discussed herein.

The ASR and/or fob user may associate a specific fob **102** identifier with the biometric sample by any method known in the art for associating an identifier (e.g., through the use of software, hardware and/or manual entry.) The ASR may additionally verify the fob user and/or fob **102** by using one or more forms of the user's secondary identification (step **1407**). For example, the ASR may verify the fob user by matching the fob information to information retrieved from scanning information from a fob user's driver's license. The ASR may verify fob **102** by contacting the vendor of fob **102** to confirm that fob **102** was issued to a specific fob user. In another embodiment, the ASR may activate fob **102** during the registration procedure to confirm that the fob **102** transponder identifier and other information is properly associated with the fob user and the fob user's specific biometric samples. The ASR may additionally employ one or more verification methods to confirm that the biometric sample belongs to the user, such as, for example, the ASR may request from the user demographic information, further biometric samples and/or any other information. As used herein, "confirm," "confirmation" or any similar term includes verifying or substantially verifying the accuracy, existence, non-existence, corroboration, and/or the like of the information, component, or any portion thereof. The ASR may additionally employ one or more additional processing methods in order to facilitate association of a biometric sample. As used herein, the term processing may include scanning, detecting, associating, digitizing, printing, comparing, storing, encrypting, decrypting, and/or verifying a biometric and/or a biometric sample, or any portion thereof.

Upon association, authentication and/or verification of the biometric sample and fob **102**, the system may create a data packet and for the sample store the data packet and fob **102** identifier (step **1409**) in one or more databases on and/or in communication with system **100** via a network, server, computer, or any other means of communicating as described herein. The database(s) may be any type of database described herein. For example, a biometric sample stored on fob **102** may be stored in database **212**. The database(s) may be located at or operated by any of the entities discussed herein such as, for example, the ASR and/or by a third-party biometric database operator.

The information stored in the database may be sorted or stored according to one or more characteristics associated

with the sample in order to facilitate faster access to the stored sample. For example, fingerprint samples may be stored in a separate database than voice prints. As another example, all fingerprints with certain whirl patterns may be stored in a separate sub-database and/or database from fingerprints with arch patterns.

The biometric samples may also be stored and/or associated with a personal identification number (PIN) and/or other identifier to facilitate access to the sample. The PIN may be fob user selected or randomly assigned to the biometric sample. The PIN may consist of any characters such as, for example, alphanumeric characters and/or foreign language characters.

The system may further protect the samples by providing additional security with the sample. The security may include, for example, encryption, decryption, security keys, digital certificates, firewalls and/or any other security methods known in the art and discussed herein. One or more security vendors may utilize the security methods to store and/or access the biometric samples. The present invention anticipates that storage of the biometric samples may be such that a sample is first encrypted and/or stored under a security procedure, such that the sample may only be accessed by a vendor with the proper level of access or security which corresponds to or provides access to the stored sample. The samples may be accessible by certain vendors such as, for example, fob **102** transaction account provider system, an issuer system, a merchant system, a fob issuer system, an employer, a financial institution, a non-financial institution, a loyalty-point provider, a company, the military, the government, a school, a travel entity, a transportation authority, and/or a security company.

The fob of the invention may include a particular security system wherein the security system incorporates a particular biometric system. As shown in FIG. **15**, fob **102** includes a biometric security system **1502** configured for facilitating biometric security using, for example, fingerprint samples. As used herein, fingerprint samples may include samples of one or more fingerprints, thumbprints, palmprints, footprints, and/or any portion thereof. Biometric security system **1502** may include a biometric sensor **1504** which may be configured with a sensor and/or other hardware and/or software for acquiring and/or processing the biometric data from the person such as, for example, optical scanning, capacitance scanning, or otherwise sensing the portion of fob user. In one embodiment, biometric sensor **1504** of the security system **1502** may scan a finger of a fob user in order to acquire his fingerprint characteristics into fob **102**. Biometric sensor **1504** may be in communication with a sensor interface/driver **1506** such that sensor interface **1506** receives the fingerprint information and transmits a signal to controller **208** to facilitate activating the operation of fob **102**. A power source (e.g., battery **1503**) may be in communication with biometric sensor **1504** and sensor interface **1506** to provide the desired power for operation of the biometric security system components.

In one exemplary application of fob **102** incorporating biometric security system **1502**, the user may place his finger on the biometric sensor to initiate the mutual authentication process between fob **102** and RFID reader **104**, and/or to provide verification of the user's identity. Fob **102** may digitize the fingerprint and compare it against a digitized fingerprint stored in a database (e.g., security database **212**) included on fob **102**. The fingerprint information may additionally be compared with information from one or more third-party databases communicating with fob **102** through any communication software and/or hardware, including for example, RFID reader **104**, a USB connection, a wireless connection, a computer, a network and/or any other means for communicating. This transfer of information may include use of encryption, decryption, security keys, digital certificates and/or other security devices to confirm the security of the sample. Fob **102** may additionally communicate with third-party databases to facilitate a comparison between fob **102** identifier and other fob identifiers stored with the biometric samples. As used herein, compare, comparison and similar terms may include determining similarities, differences, existence of elements, non-existence of elements and/or the like.

Protocol/sequence controller **208** may facilitate the local comparison to authenticate the biometric and authentication circuit **210** may validate the information. Any of the embodiments may alternatively or additionally include remote comparisons performed or controlled by one or more third-party security vendors. One or more comparison techniques and/or technologies may be used for comparisons. For example, for fingerprint comparisons, protocol/sequence controller **208** may utilize an existing database to compare fingerprint minutia such as, for example, ridge endings, bifurcation, lakes or enclosures, short ridges, dots, spurs and crossovers, pore size and location, Henry System categories such as loops, whorls, and arches, and/or any other method known in the art for fingerprint comparisons.

Fob **102** may additionally be configured with secondary security procedures to confirm that fake biometric samples are not being used. For example, to detect the use of fake fingers, fob **102** may be further configured to measure blood flow, to check for correctly aligned ridges at the edges of the fingers, and/or any other secondary procedure to reduce biometric security fraud. Other security procedures for ensuring the authenticity of biometric samples may include monitoring pupil dilation for retinal and/or iris scans, pressure sensors, blinking sensors, human motion sensors, body heat sensors and/or any other procedures known in the art for authenticating the authenticity of biometric samples.

After verifying the biometric information, fob **102** and RFID reader **104** may begin mutual authentication, and the transaction may proceed accordingly. However, the invention contemplates that the verification of biometric information may occur at any point in the transaction such as, for example, after the mutual authentication. At any point in the transaction, the system may additionally request fob user to enter a PIN and/or other identifier associated with the transaction account and/or biometric sample to provide further verification of fob user's identification. As part of the transaction, fob user payor may be requested to select from one of the financial accounts, loyalty accounts, credit accounts, debit account, and/or other accounts associated with the biometric sample. The user may be presented with a list of account options on a display associated with RFID reader **104**, fob **102**, a third-party security device and/or any other financial or transaction device association with a transaction. In another embodiment, a payee may select one of the accounts. For example, a department store payee may manually and/or automatically select a department store issued account, if available, for a transaction.

In another exemplary embodiment, biometric security system **1502** may be configured for facilitating biometric security using facial recognition or recognition of any other body part or object. As discussed herein, facial recognition may include recognition of any facial features obtained through a facial scan such as, for example, the eyes, nose, cheeks, jaw line, forehead, chin, ear features, head shape, hairline, neck features, shoulder height and/or any portion thereof. Biomet-

ric security system **1502** may include a biometric sensor **1504** which may be configured with a video camera, optical scanner, and/or other hardware and/or software for acquiring the biometric data from the person such as, for example video scanning, optical scanning or otherwise sensing any portion of fob user. In one embodiment, biometric sensor **1504** of the security system **1502** may scan the face of a fob user in order to acquire his facial characteristics into fob **102**. Biometric sensor **1504** may be in communication with a sensor/interface/driver **1506** such that sensor **1504** receives the facial information and transmits a signal to controller **208** to facilitate activating the operation of fob **102**. A power source (e.g., battery **1503**) may be in communication with biometric sensor **1504** and sensor interface **1506** to provide the desired power for operation of the biometric security system components.

In one exemplary application of fob **102** incorporating biometric security system **1502**, system **1502** may scan the facial features of the fob user to initiate the mutual authentication process between fob **102** and RFID reader **104**, and/or to provide verification of the user's identity. Security system **1502** may be configured such that fob user may stand at least two-feet away from sensor **1504**. Additionally, sensor **1504** may be configured to detect facial features of a user turned at least 30 degrees toward the camera.

Fob **102** may digitize the facial scan and compare it against a digitized facial scan stored in a database (e.g., security database **212**) included on fob **102**. The facial scan information may additionally be compared with information from one or more third-party databases communicating with fob **102** through any communication software and/or hardware, including for example, RFID reader **104**, a USB connection, a wireless connection, a computer, a network and/or any other means for communicating. This transfer of information may include use of encryption, decryption, security keys, digital certificates and/or other security devices to confirm the security of the sample. Fob **102** may additionally communicate with third-party databases to facilitate a comparison between fob **102** identifier and other fob identifiers stored with the biometric samples.

Protocol/sequence controller **208** may facilitate the local comparison to authenticate the biometric, and authentication circuit **210** may validate the information. Any of the embodiments may alternatively or additionally include remote comparisons performed or controlled by one or more third-party security vendors. One or more comparison techniques and/or technologies may be used for comparisons. For example, for facial recognition, protocol/sequence controller **208** may utilize an existing database to compare nodal points such as the distance between the eyes, the width of the nose, the jaw line, and the depth of the user's eye sockets. While only some types of nodal points are listed, the present invention recognizes that it is known that there are over 80 different nodal points on a human face that may be used for comparison in the present invention. Additionally, third-party devices such as facial recognition software and/or hardware systems may be used to facilitate facial recognition, such as the systems developed by Viisage, Imagis, and Identix which employ complex algorithms that facilitate both searching facial and/or ear scans and adjusting stored data based on eyewear, facial hair, and other changes in outward facial and/or ear appearance.

Fob **102** may additionally be configured with secondary security procedures to confirm that fake biometric samples are not being used. For example, to detect the use of fake facial features, fob **102** may be further configured to measure blood flow, to detect a thermal pattern associated with facial features, and/or any other secondary procedure to reduce biometric security fraud. Other security procedures for ensuring the authenticity of biometric samples may include monitoring pupil dilation for retinal and/or iris scans, pressure sensors, blinking sensors, human motion sensors, body heat sensors and/or any other procedures known in the art for authenticating the authenticity of biometric samples. After verifying the biometric information, fob **102** and RFID reader **104** may begin mutual authentication by any of the methods described herein.

In another exemplary embodiment, biometric security system **1502** may be configured for facilitating biometric security using voice recognition. As discussed herein, voice recognition may include recognition of voice and/or speaker features such as, phonated excitation, whispered excitation, frication excitation, compression, vibration, parametric waveforms, tone, pitch, dialect, annunciation, and/or any portion thereof. As discussed herein, these voice recognition features may be collectively referred to as a "voice print." Biometric security system **1502** may include a biometric sensor **1504** which may be configured with an audio capture device such as a microphone, telephone, cellular phone, speaker and/or other hardware and/or software for acquiring the biometric data from the person such as, for example auditory scanning, recording or otherwise sensing the portion of fob user.

In one exemplary application of fob **102** incorporating biometric security system **1502**, system **1502** may capture the voice print of the fob user to initiate the mutual authentication process between fob **102** and RFID reader **104**, and/or to provide verification of the user's identity. In one embodiment, biometric sensor **1504** of the security system **1502** may capture a voice print, when a user recites, for example, a pass phrase or audible PIN. Biometric sensor **1504** may be in communication with a sensor/interface/driver **1506** such that sensor **1504** receives the voice print and transmits a signal to controller **208** to facilitate activating the operation of fob **102**. A power source (e.g., battery **1503**) may be in communication with biometric sensor **1504** and sensor interface **1506** to provide the desired power for operation of the biometric security system components.

Fob **102** may digitize the voice print and compare it against a digitized voice print stored in a database (e.g., security database **212**) included on fob **102**. The voice print information may additionally be compared with information from one or more third-party databases communicating with fob **102** through any communication software and/or hardware, including for example, RFID reader **104**, a USB connection, a wireless connection, a computer, a network and/or any other means for communicating. Protocol/sequence controller **208** may facilitate the local comparison to authenticate the biometric and authentication circuit **210** may validate the information. Any of the embodiments may alternatively or additionally include remote comparisons performed or controlled by one or more third-party security vendors.

One or more comparison techniques and/or technologies may be used for comparisons. For example, for voice recognition, protocol/sequence controller **208** may utilize an existing database to compare the voice print by comparing voice print waveforms in the time domain, by comparing energy content in the voice prints across the frequency domain, by the use of stochastic models and/or template models, and/or by any other voice recognition method known in the art. This transfer of information may include use of encryption, decryption, security keys, digital certificates and/or other security devices to confirm the security of the sample. Fob **102** may additionally communicate with third-party databases to facilitate a comparison between fob **102** identifier

and other fob identifiers stored with the biometric samples. Further, the present invention anticipates use of one or more third-party devices such as voice recognition software and/or hardware systems to facilitate voice print comparisons, such as, for example SAFLINK and Voice Security Systems.

Fob **102** and/or any other third-party security vendor system used in connection with fob **102** may additionally be configured with secondary security procedures to confirm that fake biometric samples are not being used. For example, to detect the use of a recorded voice, system **1502** may be further configured to detect audio noise associated with an electronic device and/or any other secondary procedure to thwart biometric security fraud. After verifying the biometric information, fob **102** and RFID reader **104** may begin mutual authentication by the methods described herein.

In another exemplary embodiment of the present invention, biometric security system **1502** may be configured for facilitating biometric security using signature recognition. As discussed herein, signature recognition may include recognition of the shape, speed, stroke, stylus pressure, timing information and/or other signature information and/or any portion thereof during the act of signing. As discussed herein, these signature recognition features may be collectively referred to as a "signature scan." Biometric security system **1502** may include a biometric sensor **1504** which may be configured with an LCD screen, digitizing tablet and/or other hardware and/or software that facilitates digitization of biometric data from the person such as, for example signature scanning, recording or otherwise sensing the signature of fob user.

In one exemplary application of fob **102** incorporating biometric security system **1502**, system **1502** may capture the signature scan of the fob user to initiate the mutual authentication process between fob **102** and RFID reader **104**, and/or to provide verification of the user's identity. In one embodiment, biometric sensor **1504** of the security system **1502** may capture a signature scan, when a user signs, for example, his name or a specified word or phrase. Biometric sensor **1504** may be in communication with a sensor/interface/driver **1506** such that sensor **1504** receives the signature scan and transmits a signal to controller **208** to facilitate activating the operation of fob **102**. A power source (e.g., battery **1503**) may be in communication with biometric sensor **1504** and sensor interface **1506** to provide the desired power for operation of the biometric security system components.

Fob **102** may digitize the signature scan and compare it against a digitized signature scan stored in a database (e.g., security database **212**) included on fob **102**. The signature scan information may additionally be compared with information from one or more third-party databases communicating with fob **102** through any communication software and/or hardware, including for example, RFID reader **104**, a USB connection, a wireless connection, a computer, a network and/or any other means for communicating. Protocol/sequence controller **208** may facilitate the local comparison to authenticate the biometric and authentication circuit **210** may validate the information. Any of the embodiments may alternatively or additionally include remote comparisons performed or controlled by one or more third-party security vendors.

For example, for voice recognition, protocol/sequence controller **208** may utilize an existing database to compare the features of a signature scan by comparing graphs, charts, and or other data relating to shape, speed, stroke, stylus pressure, timing information and/or by any other signature recognition data. This transfer of information may include use of encryption, decryption, security keys, digital certificates and/or other security devices to confirm the security of the sample.

Fob **102** may additionally communicate with third-party databases to facilitate a comparison between fob **102** identifier and other fob identifiers stored with the biometric samples. Further, the present invention anticipates use of one or more third-party devices such as signature recognition software and/or hardware systems to facilitate signature scan comparisons, such as, for example CyberSIGN, LCI Computer Group, and Xenetek.

Fob **102** and/or any other third-party security vendor system used in connection with fob **102** may additionally be configured with secondary security procedures to confirm that fake biometric samples are not being used. For example, to detect the use of a false signature device, system **1502** may be further configured to detect a thermal pattern associated with a human hand and/or any other secondary procedure to thwart biometric security fraud. After verifying the biometric information, fob **102** and RFID reader **104** may begin mutual authentication by the methods described herein.

In another exemplary embodiment, biometric security system **1502** may be configured for facilitating biometric security using vascular pattern recognition. As discussed herein, vascular pattern may include recognition of structures, depths, and other biometric reference points of arterial tissues, vein tissues, capillary tissues, epithelial tissues, connective tissues, muscle tissues, nervous and/or other inner tissues and/or any portion thereof. As discussed herein, these vascular pattern features may be collectively referred to as a "vascular scan." Biometric security system **1502** may include a biometric sensor **1504** which may be configured with an optical scanner, thermal scanner and/or other hardware and/or software that facilitates capture of biometric data from the person such as, for example scanning, detecting or otherwise sensing a vascular pattern of fob user.

In one exemplary application of fob **102** incorporating biometric security system **1502**, system **1502** may capture the vascular scan of the fob user to initiate the mutual authentication process between fob **102** and RFID reader **104**, and/or to provide verification of the user's identity. In one embodiment, biometric sensor **1504** of the security system **1502** may capture a vascular scan, when a user places his hand in front of an optical scanner. Biometric sensor **1504** may be in communication with a sensor/interface/driver **1506** such that sensor **1504** receives the vascular scan and transmits a signal to controller **208** to facilitate activating the operation of fob **102**. A power source (e.g., battery **1503**) may be in communication with biometric sensor **1504** and sensor interface **1506** to provide the desired power for operation of the biometric security system components.

Fob **102** may digitize the vascular scan based on biometric reference points and compare it against a digitized vascular scan stored in a database (e.g., security database **212**) included on fob **102**. The vascular scan information may additionally be compared with information from one or more third-party databases communicating with fob **102** through any communication software and/or hardware, including for example, RFID reader **104**, a USB connection, a wireless connection, a computer, a network and/or any other means for communicating. Protocol/sequence controller **208** may facilitate the local comparison to authenticate the biometric and authentication circuit **210** may validate the information. Any of the embodiments may alternatively or additionally include remote comparisons performed or controlled by one or more third-party security vendors.

For example, for vascular pattern recognition, protocol/sequence controller **208** may utilize an existing database to compare the vascular scan by comparing biometric reference points, vascular coordinates, vascular and/or tissue lengths,

widths and depths; blood pressure including waveforms, dicrotic notches, diastolic pressure, systolic pressure, anacrotic notches and pulse pressure, and/or any other characteristic of vascular and/or tissue patterns. This transfer of information may include use of encryption, decryption, security keys, digital certificates and/or other security devices to confirm the security of the sample. Fob **102** may additionally communicate with third-party databases to facilitate a comparison between fob **102** identifier and other fob identifiers stored with the biometric samples. Further, the present invention anticipates use of one or more third-party devices such as vascular pattern recognition software and/or hardware systems to facilitate vascular scan comparisons, such as, for example VEID International, Identica and ABT Advanced Biometric Technologies.

Fob **102** and/or any other third-party security vendor system used in connection with fob **102** may additionally be configured with secondary security procedures to confirm that fake biometric samples are not being used. For example, to detect the use of a false vascular patterns, system **1502** may be further configured to detect a thermal pattern associated with vascular patterns and/or any other secondary procedure to thwart biometric security fraud. After verifying the biometric information, fob **102** and RFID reader **104** may begin mutual authentication by the methods described herein.

In another exemplary embodiment, biometric security system **1502** may be configured for facilitating biometric security using DNA biometrics. As discussed herein, DNA biometrics may include recognition of structures, gene sequences, and other genetic characteristics of skin tissue, hair tissue, and/or any other human tissue and/or any portion thereof containing genetic information. As discussed herein, these genetic features may be collectively referred to as a "DNA scan." Biometric security system **1502** may include a biometric sensor **1504** which may be configured with an infrared optical sensor, a chemical sensor and/or other hardware and/or software that facilitates capture of biometric data from the person such as, for example scanning, detecting or otherwise sensing a DNA scan of fob user.

In one exemplary application of fob **102** incorporating biometric security system **1502**, system **1502** may capture the DNA scan of the fob user to initiate the mutual authentication process between fob **102** and RFID reader **104**, and/or to provide verification of the user's identity. In one embodiment, biometric sensor **1504** of the security system **1502** may capture a DNA scan, when a user submits genetic material to sensor **1504**. Biometric sensor **1504** may be in communication with a sensor/interface/driver **1506** such that sensor **1504** receives the DNA scan and transmits a signal to controller **208** to facilitate activating the operation of fob **102**. A power source (e.g., battery **1503**) may be in communication with biometric sensor **1504** and sensor interface **1506** to provide the desired power for operation of the biometric security system components.

Fob **102** may digitize the DNA scan based on genetic information reference points and compare it against a digitized DNA scan stored in a database (e.g., security database **212**) included on fob **102**. The DNA scan information may additionally be compared with information from one or more third-party databases communicating with fob **102** through any communication software and/or hardware, including for example, RFID reader **104**, a USB connection, a wireless connection, a computer, a network and/or any other means for communicating. Protocol/sequence controller **208** may facilitate the local comparison to authenticate the biometric and authentication circuit **210** may validate the information. Any of the embodiments may alternatively or additionally include remote comparisons performed or controlled by one or more third-party security vendors.

For example, for DNA recognition, protocol/sequence controller **208** may utilize an existing database to compare the DNA scan by comparing nucleotides, code sequences, regulatory regions, initiation and stop codons, exon/intron borders, and/or any other characteristics of DNA. This transfer of information may include use of encryption, decryption, security keys, digital certificates and/or other security devices to confirm the security of the sample. Fob **102** may additionally communicate with third-party databases to facilitate a comparison between fob **102** identifier and other fob identifiers stored with the biometric samples. Further, the present invention anticipates use of one or more third-party devices such as DNA recognition software and/or hardware systems to facilitate DNA scan comparisons, such as, for example Applied DNA Sciences.

Fob **102** and/or any other third-party security vendor system used in connection with fob **102** may additionally be configured with secondary security procedures to confirm that fake biometric samples are not being used. For example, to detect the use false DNA, system **1502** may be further configured to take a DNA sample directly off a user and/or any other secondary procedure to thwart biometric security fraud. After verifying the biometric information, fob **102** and RFID reader **104** may begin mutual authentication by the methods described herein.

In another exemplary embodiment, biometric security system **1502** may be configured for facilitating biometric security using hand geometry biometrics. As discussed herein, hand geometry biometrics may include recognition of hand geometry parameters, such as, for example, hand shape, finger length, finger thickness, finger curvature and/or any portion thereof. As discussed herein, these hand geometry features may be collectively referred to as a "hand geometry scan." Biometric security system **1502** may include a biometric sensor **1504** which may be configured with an infrared optical sensor, a three-dimensional imaging system and/or other hardware and/or software that facilitates capture of biometric data from the person such as, for example scanning, detecting or otherwise sensing a hand geometry scan of fob user.

In one exemplary application of fob **102** incorporating biometric security system **1502**, system **1502** may capture the hand geometry scan of the fob user to initiate the mutual authentication process between fob **102** and RFID reader **104**, and/or to provide verification of the user's identity. In one embodiment, biometric sensor **1504** of the security system **1502** may capture a hand geometry scan, when a user places his hand in front of an optical scanner. Biometric sensor **1504** may be in communication with a sensor/interface/driver **1506** such that sensor **1504** receives the hand geometry scan and transmits a signal to controller **208** to facilitate activating the operation of fob **102**. A power source (e.g., battery **1503**) may be in communication with biometric sensor **1504** and sensor interface **1506** to provide the desired power for operation of the biometric security system components.

Fob **102** may digitize the hand geometry scan based on hand geometry parameters and compare it against a digitized hand geometry scan stored in a database (e.g., security database **212**) included on fob **102**. The hand geometry scan information may additionally be compared with information from one or more third-party databases communicating with fob **102** through any communication software and/or hardware, including for example, RFID reader **104**, a USB connection, a wireless connection, a computer, a network and/or any other means for communicating. Protocol/sequence con-

troller **208** may facilitate the local comparison to authenticate the biometric and authentication circuit **210** may validate the information. Any of the embodiments may alternatively or additionally include remote comparisons performed or controlled by one or more third-party security vendors.

For example, for hand geometry recognition, protocol/sequence controller **208** may utilize an existing database to compare hand shape, finger length, finger thickness, finger curvature and/or any other of the 90 different hand geometry parameters known in the art. This transfer of information may include use of encryption, decryption, security keys, digital certificates and/or other security devices to confirm the security of the sample. Fob **102** may additionally communicate with third-party databases to facilitate a comparison between fob **102** identifier and other fob identifiers stored with the biometric samples. Further, the present invention anticipates use of one or more third-party devices such as hand geometry recognition software and/or hardware systems to facilitate hand geometry scan comparisons, such as, for example IR Recognition Services and Human Recognition Services.

Fob **102** and/or any other third-party security vendor system used in connection with fob **102** may additionally be configured with secondary security procedures to confirm that fake biometric samples are not being used. For example, to detect the use of false hands, system **1502** may be further configured to measure blood flow, to detect body heat and/or any other secondary procedure to thwart biometric security fraud. After verifying the biometric information, fob **102** and RFID reader **104** may begin mutual authentication by the methods described herein.

In another exemplary embodiment, biometric security system **1502** may be configured for facilitating biometric security using auditory emissions biometrics. As discussed herein, auditory emissions biometrics may include emissions that an ear generates when stimulated by sound, such as vibrations and reverberated sound waves and/or any portion thereof. As discussed herein, these auditory emissions features may be collectively referred to as an "auditory emissions scan." Biometric security system **1502** may include a biometric sensor **1504** which may be configured with an infrared optical sensor, an auditory sensor, an auditory generator and/or other hardware and/or software that facilitates the capture of biometric data from the person such as, for example sound generating, scanning, detecting or otherwise sensing an auditory emissions scan of fob user.

In one exemplary application of fob **102** incorporating biometric security system **1502**, system **1502** may capture the auditory emissions scan of the fob user to initiate the mutual authentication process between fob **102** and RFID reader **104**, and/or to provide verification of the user's identity. In one embodiment, biometric sensor **1504** of the security system **1502** may capture an auditory emissions scan, when a user hears an auditory stimulant and the user's auditory emissions are detected by biometric sensor **1504**. Biometric sensor **1504** may be in communication with a sensor/interface/driver **1506** such that sensor **1504** receives the auditory emissions scan and transmits a signal to controller **208** to facilitate activating the operation of fob **102**. A power source (e.g., battery **1503**) may be in communication with biometric sensor **1504** and sensor interface **1506** to provide the desired power for operation of the biometric security system components.

Fob **102** may digitize the auditory emissions scan based on emissions waveforms and compare it against a digitized auditory emissions scan stored in a database (e.g., security database **212**) included on fob **102**. The auditory emissions scan information may additionally be compared with information from one or more third-party databases communicating with fob **102** through any communication software and/or hardware, including for example, RFID reader **104**, a USB connection, a wireless connection, a computer, a network and/or any other means for communicating. Protocol/sequence controller **208** may facilitate the local comparison to authenticate the biometric and authentication circuit **210** may validate the information. Any of the embodiments may alternatively or additionally include remote comparisons performed or controlled by one or more third-party security vendors.

For example, for auditory emissions recognition, protocol/sequence controller **208** may utilize an existing database to compare emissions difference in frequency, wavelength, and/or other characteristics between the transmitted and reverberated sound waves. This transfer of information may include use of encryption, decryption, security keys, digital certificates and/or other security devices to confirm the security of the sample. Fob **102** may additionally communicate with third-party databases to facilitate a comparison between fob **102** identifier and other fob identifiers stored with the biometric samples. Further, the present invention anticipates use of one or more third-party devices such as auditory emissions recognition software and/or hardware systems to facilitate auditory emissions scan comparisons, such as, for example those developed by the University of Southampton.

Fob **102** and/or any other third-party security vendor system used in connection with fob **102** may additionally be configured with secondary security procedures to confirm that fake biometric samples are not being used. For example, to detect the use of false auditory emissions scans, system **1502** may be further configured to detect electronic noise associated with a device producing electronic auditory emissions and/or any other secondary procedure to thwart biometric security fraud. After verifying the biometric information, fob **102** and RFID reader **104** may begin mutual authentication by the methods described herein.

In another exemplary embodiment, biometric security system **1502** may be configured for facilitating biometric security using olfactory biometrics. As discussed herein, olfactory biometrics may include odorants that a body generates when odor evaporates from and/or any portion thereof. As discussed herein, these odorants may be collectively referred to as a "smellprint." Biometric security system **1502** may include a biometric sensor **1504** which may be configured with an electronic sensor, a chemical sensor, and/or an electronic or chemical sensor configured as an array of chemical sensors, wherein each chemical sensor may detect a specific odorant, or smell. In another embodiment, biometric sensor **1504** may be configured as a gas chromatograph, spectrometer, conductivity sensor, piezoelectric sensor and/or other hardware and/or software that facilitates the capture of biometric data from the person such as, for example, scanning, detecting or otherwise sensing a smellprint of fob user.

In one exemplary application of fob **102** incorporating biometric security system **1502**, system **1502** may capture the smellprint of the fob user to initiate the mutual authentication process between fob **102** and RFID reader **104**, and/or to provide verification of the user's identity. In one embodiment, biometric sensor **1504** of the security system **1502** may capture a smellprint, when a user stands within at least two feet of sensor **1504**. Biometric sensor **1504** may be in communication with a sensor/interface/driver **1506** such that sensor **1504** receives the smellprint and transmits a signal to controller **208** to facilitate activating the operation of fob **102**. A power source (e.g., battery **1503**) may be in communication with biometric sensor **1504** and sensor interface **1506** to provide the desired power for operation of the biometric security system components.

Fob **102** may digitize the smellprint and compare it against a digitized smellprint stored in a database (e.g., security database **212**) included on fob **102**. The smellprint information may additionally be compared with information from one or more third-party databases communicating with fob **102** through any communication software and/or hardware, including for example, RFID reader **104**, a USB connection, a wireless connection, a computer, a network and/or any other means for communicating. Protocol/sequence controller **208** may facilitate the local comparison to authenticate the biometric and authentication circuit **210** may validate the information. Any of the embodiments may alternatively or additionally include remote comparisons performed or controlled by one or more third-party security vendors.

For example, for smellprints, protocol/sequence controller **208** may utilize an existing database to compare the difference in molecular structures, chemical compounds, temperature, mass differences, pressure, force, and odorants by using statistical, ANN and neuromorphic techniques. This transfer of information may include use of encryption, decryption, security keys, digital certificates and/or other security devices to confirm the security of the sample. Fob **102** may additionally communicate with third-party databases to facilitate a comparison between fob **102** identifier and other fob identifiers stored with the biometric samples. Further, the present invention anticipates use of one or more third-party devices such as smellprint recognition software and/or hardware systems to facilitate smellprint comparisons, such as, for example those developed by Company Mastiff Electronic Systems.

Fob **102** and/or any other third-party security vendor system used in connection with fob **102** may additionally be configured with secondary security procedures to confirm that fake biometric samples are not being used. For example, to detect the use of a false odorant, system **1502** may be further configured to detect man-made smells, abnormal odorants, body heat and/or any other secondary procedure to thwart biometric security fraud. After verifying the biometric information, fob **102** and RFID reader **104** may begin mutual authentication by the methods described herein.

In another exemplary embodiment, biometric security system **1502** may be configured for facilitating biometric security using keystroke/typing recognition biometrics. As discussed herein, keystroke/typing recognition biometrics may include recognition of the duration of keystrokes, latencies between keystrokes, inter-keystroke times, typing error frequency, force keystrokes and/or any portion thereof. As discussed herein, these features may be collectively referred to as a "keystroke scan." Biometric security system **1502** may include a biometric sensor **1504** which may be configured with an electronic sensor, an optical sensor, a keyboard, and/or other hardware and/or software that facilitates the capture of biometric data from the person such as, for example, scanning, detecting or otherwise sensing a keystroke scan of fob user.

In one exemplary application of fob **102** incorporating biometric security system **1502**, system **1502** may capture the keystroke scan of the fob user to initiate the mutual authentication process between fob **102** and RFID reader **104**, and/or to provide verification of the user's identity. In one embodiment, biometric sensor **1504** of the security system **1502** may capture a keystroke scan, when a user types, for example, a PIN or pass phrase into a keyboard configured with sensor **1504**. Biometric sensor **1504** may be in communication with a sensor/interface/driver **1506** such that sensor **1504** receives the keystroke scan and transmits a signal to controller **208** to facilitate activating the operation of fob **102**. A power source (e.g., battery **1503**) may be in communication with biometric sensor **1504** and sensor interface **1506** to provide the desired power for operation of the biometric security system components.

Fob **102** may digitize the keystroke scan based on keystroke characteristics and compare the scan against a digitized keystroke scan stored in a database (e.g., security database **212**) included on fob **102**. The keystroke scan information may additionally be compared with information from one or more third-party databases communicating with fob **102** through any communication software and/or hardware, including for example, RFID reader **104**, a USB connection, a wireless connection, a computer, a network and/or any other means for communicating. Protocol/sequence controller **208** may facilitate the local comparison to authenticate the biometric and authentication circuit **210** may validate the information. Any of the embodiments may alternatively or additionally include remote comparisons performed or controlled by one or more third-party security vendors.

For example, for keystroke scans, protocol/sequence controller **208** may utilize an existing database to compare the behavioral, temporal and physical characteristics associated with keystrokes. This transfer of information may include use of encryption, decryption, security keys, digital certificates and/or other security devices to confirm the security of the sample. Fob **102** may additionally communicate with third-party databases to facilitate a comparison between fob **102** identifier and other fob identifiers stored with the biometric samples. Further, the present invention anticipates use of one or more third-party devices such as keystroke scan recognition software and/or hardware systems to facilitate keystroke scan comparisons, such as, for example those developed by BioPassword® by BioNet Systems, LLC.

Fob **102** and/or any other third-party security vendor system used in connection with fob **102** may additionally be configured with secondary security procedures to confirm that fake biometric samples are not being used. For example, to detect the use of a false keystroke, system **1502** may be further configured to detect body heat and/or any other secondary procedure to thwart biometric security fraud. After verifying the biometric information, fob **102** and RFID reader **104** may begin mutual authentication by the methods described herein.

In another exemplary embodiment, biometric security system **1502** may be configured for facilitating biometric security using iris scan biometrics. As discussed herein, iris scan biometrics may include recognition of characteristics of the colored tissues surrounding the pupil, such as the rings, furrows and freckles and/or any portion thereof. As discussed herein, these characteristics may be collectively referred to as an "iris scan." Biometric security system **1502** may include a biometric sensor **1504** which may be configured with a video camera, an optical scanner, a digital camera, a charge coupled device and/or other hardware and/or software that facilitates the capture of biometric data from the person such as, for example, scanning, detecting or otherwise sensing an iris scan of fob user.

In one exemplary application of fob **102** incorporating biometric security system **1502**, system **1502** may capture the iris scan of the fob user to initiate the mutual authentication process between fob **102** and RFID reader **104**, and/or to provide verification of the user's identity. In one embodiment, biometric sensor **1504** of the security system **1502** may capture an iris scan, when a user uses sensor **1504** to scan his iris while he is up to five feet away from sensor **1504**. Sensor **1504** may scan the user's iris through contacts, sunglasses, and/or any other type of eye glasses. Biometric sensor **1504** may be

in communication with a sensor interface/driver **1506** such that sensor **1504** receives the iris scan and transmits a signal to controller **208** to facilitate activating the operation of fob **102**. A power source (e.g., battery **1503**) may be in communication with biometric sensor **1504** and sensor interface **1506** to provide the desired power for operation of the biometric security system components.

Fob **102** may digitize the iris scan based on iris characteristics and compare the scan against a digitized iris scan stored in a database (e.g., security database **212**) included on fob **102**. The iris scan information may additionally be compared with information from one or more third-party databases communicating with fob **102** through any communication software and/or hardware, including for example, RFID reader **104**, a USB connection, a wireless connection, a computer, a network and/or any other means for communicating. Protocol/sequence controller **208** may facilitate the local comparison to authenticate the biometric and authentication circuit **210** may validate the information. Any of the embodiments may alternatively or additionally include remote comparisons performed or controlled by one or more third-party security vendors.

For example, for iris scans, protocol/sequence controller **208** may utilize an existing database to compare the surface patterns of the iris by localizing the boundaries and the eyelid contours of the iris and creating a phase code for the texture sequence in the iris. This transfer of information may include use of encryption, decryption, security keys, digital certificates and/or other security devices to confirm the security of the sample. Fob **102** may additionally communicate with third-party databases to facilitate a comparison between fob **102** identifier and other fob identifiers stored with the biometric samples. Further, the present invention anticipates use of one or more third-party devices such as iris scan recognition software and/or hardware systems to facilitate iris scan comparisons, such as, for example those developed by Iridian, LG Electronics and BioCom.

Fob **102** and/or any other third-party security vendor system used in connection with fob **102** may additionally be configured with secondary security procedures to confirm that fake biometric samples are not being used. For example, to detect the use of a false iris, system **1502** may be further configured to vary the light shone into the eye to watch for pupil dilation, to detect body heat and/or any other secondary procedure to thwart biometric security fraud. After verifying the biometric information, fob **102** and RFID reader **104** may begin mutual authentication by the methods described herein.

In another exemplary embodiment, biometric security system **1502** may be configured for facilitating biometric security using retinal scanning biometrics. As discussed herein, retinal scanning biometrics may include recognition of characteristics of the reflected retinal pattern of the eye, such as the location, structure, size, and shape of blood vessels and/or any portion thereof. As discussed herein, these characteristics may be collectively referred to as a "retinal scan." Biometric security system **1502** may include a biometric sensor **1504** which may be configured with low-intensity light source, such as an infrared source, an optical coupler and/or other hardware and/or software that facilitates the capture of biometric data from the person such as, for example, scanning, detecting or otherwise sensing a retinal scan of fob user.

In one exemplary application of fob **102** incorporating biometric security system **1502**, system **1502** may capture the iris scan of the fob user to initiate the mutual authentication process between fob **102** and RFID reader **104**, and/or to provide verification of the user's identity. In one embodiment, biometric sensor **1504** of the security system **1502** may capture a retinal scan, when a sensor **1504** shines a light source into the user's retina and detects the reflected retina pattern. Sensor **1504** may detect a user's retinal pattern when the user is up to five feet away from sensor **1504**. Biometric sensor **1504** may be in communication with a sensor interface/driver **1506** such that sensor **1504** receives the retinal scan and transmits a signal to controller **208** to facilitate activating the operation of fob **102**. A power source (e.g., battery **1503**) may be in communication with biometric sensor **1504** and sensor interface **1506** to provide the desired power for operation of the biometric security system components.

Fob **102** may digitize the retinal scan based on retinal characteristics and compare the scan against a digitized iris scan stored in a database (e.g., security database **212**) included on fob **102**. The retinal scan information may additionally be compared with information from one or more third-party databases communicating with fob **102** through any communication software and/or hardware, including for example, RFID reader **104**, a USB connection, a wireless connection, a computer, a network and/or any other means for communicating. Protocol/sequence controller **208** may facilitate the local comparison to authenticate the biometric and authentication circuit **210** may validate the information. Any of the embodiments may alternatively or additionally include remote comparisons performed or controlled by one or more third-party security vendors.

For example, for retinal scans, protocol/sequence controller **208** may utilize an existing database to compare the blood vessel patterns of the retina by comparing stored and detected retinal patterns. This transfer of information may include use of encryption, decryption, security keys, digital certificates and/or other security devices to confirm the security of the sample. Fob **102** may additionally communicate with third-party databases to facilitate a comparison between fob **102** identifier and other fob identifiers stored with the biometric samples. Further, the present invention anticipates use of one or more third-party devices such as retinal scan recognition software and/or hardware systems to facilitate keystroke scan comparisons, such as, for example those developed by Eye-Key and Retinal Technologies.

Fob **102** and/or any other third-party security vendor system used in connection with fob **102** may additionally be configured with secondary security procedures to confirm that fake biometric samples are not being used. For example, to detect the use of a false retina, system **1502** may be further configured to vary the light shone into the eye to watch for pupil dilation, to detect body heat and/or any other secondary procedure to thwart biometric security fraud. After verifying the biometric information, fob **102** and RFID reader **104** may begin mutual authentication by the methods described herein.

In an additional or alternate embodiment, RFID reader **104** may include one or more security system, wherein the security system incorporates one or more biometric system. As shown in FIG. **16**, RFID reader **104** includes a biometric security system **1602** configured for facilitating biometric security using a biometric sample. Biometric security system **1602** may include a biometric sensor **1604** which may be configured with a sensor, video camera, digital camera, optical scanner, light source and/or other hardware and/or software for acquiring biometric data form the person such as, for example, optical scanning, chemical sensing, or otherwise detecting the portion of fob user. Biometric sensor **1604** may be in communication with a sensor interface/driver **1606** such that sensor interface **1606** receives biometric information and transmits a signal to controller **208** to facilitate activating the operation of fob **102**.

In one exemplary application of RFID reader **104** including biometric security system **1602**, the user may submit a biometric sample to the biometric sensor to initiate the mutual authentication process between fob **102** and RFID reader **104**, and/or to provide verification of the user's identity. RFID reader **104** may digitize the sample and compare it against a digitized biometric sample stored in a database (e.g., database **310**) included on RFID reader **104**. The biometric sample information may additionally be compared with information from one or more third-party databases communicating with fob **102** through any communication software and/or hardware, including for example, fob **102**, a USB connection, a wireless connection, a computer, a network and/or any other means for communicating. The transfer of information may include use of encryption decryption, security keys, digital certificates and/or other security devices to confirm the security of the sample. RFID reader **104** may additionally communicate with third-party databases to facilitate a comparison between fob **102** identifier and other fob identifiers stored with the biometric samples.

Protocol/sequence controller **314** may facilitate the local comparison to authenticate the biometric sample and authentication circuit **308** may validate the information. Any of the embodiments may alternatively or additionally include remote comparisons performed or controlled by third-party security vendors in any way known in the art for comparing biometric data.

RFID reader **104** may also be configured with secondary security procedures biometric to confirm that fake biometric samples are not being used. For example, RFID reader **104** may be further configured to measure blood flow, body heat and/or any other secondary procedure to reduce biometric security fraud. Other security procedures for ensuring the authenticity of biometric samples may include monitoring pupil dilation for retinal and/or iris scans, pressure sensors, blinking sensors, human motion sensors, and/or any other procedures known in the art for authenticating the authenticity of biometric samples. After verifying the biometric information, fob **102** and RFID reader **104** may begin mutual authentication, and the transaction may proceed accordingly.

While the biometric safeguard mechanisms describe fob **102** and/or RFID reader **104** configured with a biometric safeguard mechanism, any part of system **100** may be equipped with a biometric safeguard system. For example, the invention contemplates receiving a biometric sample only at the reader, only at the fob, at both the fob and the reader, or at any other combination of location or device. As such, any scanner or database discussed herein may be located within or associated with another device. For example, the fob may scan a user biometric, but the database used for comparison may be located within the reader or merchant server. In other embodiments, the biometric security device may be located away from the point of sale device and/or provide other functions. For example, the biometric security device may be located near the item to be purchased or located in any other location within or outside of the merchant. In one embodiment, the biometric security device may be located outside of a jewelry display to allow a user to not only start the authentication process before check-out, but also to allow access to the product within the display case. In this regard, the biometric security device may communicate the information to the point of sale device so the POS may verify that the person that entered the jewelry box is the same person that is now buying the jewelry. In another embodiment, any portion of system **100** may be configured with a biometric security device. The biometric security device may be attached and/or free-standing. Biometric security devices may be configured for local and/or third-party operation. For example, the present invention contemplates the use of third-party fingerprint scanning and security devices such as those made by Interlink Electronics, Keytronic, Identix Biotouch, BIOmetricID, onClick, and/or other third-party vendors.

In yet another embodiment, the database used for comparison may contain terrorist and/or criminal information. As used herein, terrorists and/or criminals may include terrorists, felons, criminals, convicts, indicted persons, insurgents, revolutionaries and/or other offenders. The information may include biometric information, personal information as described herein, arrest records, aliases used, country of residence, affiliations with gangs and terrorist groups, and/or any other terrorist and/or criminal information.

As an example of a secondary security procedure in accordance with the present invention, the biometric sensor **1504**, **1604** may be configured to allow a finite number of scans. For example, biometric sensor **1504**, **1604** may be configured to only accept data from a single scan. As a result, biometric sensor **1504**, **1604** may turn off or deactivate fob **102** and/or RFID reader **104** if more than one scan is needed to obtain a biometric sample. Biometric sensor **1504**, **1604** may also be configured to accept a preset limit of scans. For example, biometric sensor **1504**, **1604** may receive three invalid biometric samples before it turns off and/or deactivates fob **102** and/or RFID reader **104**.

The sensor or any other part of system **100** may also activate upon sensing a particular type or group of biometric samples. The activation may include sending a signal, blinking, audible sound, visual display and/or the like. For example, if the sensor detects information from a gold card member, the system may display a special offer on the POS terminal. If the sensor detects a repeat customer, the sensor may signal or notify a manager to approach the customer and thank them for their repeat business. In another embodiment, the system may send a signal to a primary account holder or any other person or device to notify them that the fob is being used or that a condition or rule is being violated (e.g., charge above $1000).

Any of the biometric security systems described herein may additionally be configured with a fraud protection log. That is, a biometric security system, such as biometric security system **1502**, **1602** may be configured to log all biometric samples submitted on fob **102** and/or RFID reader **104** and store the log information on databases on and/or communicating with system **1502**, **1602**. If a new and/or different biometric sample is submitted that differs from the log data, biometric security system **1502**, **1602** may employ a security procedure such as deactivation, warning authorities, requesting a secondary scan, and/or any other security procedure.

Biometric security system **1502**, **1602** and/or the biometric security system configured with system **100** may also be configured to obtain a plurality of biometric samples for verification and/or other security purposes. For example, after biometric security system **1502**, receives a first biometric sample (e.g., scans one finger,) it may be configured to receive a second biometric sample (e.g., scans a second finger). The first and second biometric samples may be compared with stored biometric samples by any of the methods disclosed herein. The second biometric sample may be the only sample compared with stored biometric samples if the first sample is unreadable or inadequate.

In yet another exemplary embodiment of the present invention, fob **102** may be equipped with a biometric safeguard mechanism. For example, in one exemplary application of fob **102**, fob **102** may use biometric security system **1502** to authorize a transaction that violates an established rule, such

as, for example, a purchase exceeding an established per purchase spending limit, a purchase exceeding a preset number of transactions, any portion of a purchase and/or transaction involving non-monetary funds (e.g., paying a portion of the transaction with loyalty points, coupons, airline miles, etc.) and/or any other purchase and/or transaction exceeding a preset or established limit. Fob user, a third-party issuer system a third-party financial system, a company and/or any other entity or system may establish the preset limits. The limits may be used to prevent fraud, theft, overdrafts, and/or other non-desirable situations associated with financial and non-financial accounts. For example, if fob **102** is stolen and the thief tries to make a large purchase with the card, the biometric safeguard mechanism may prevent the purchase until fob user's identity is verified by biometric means.

For example, fob **102** may activate biometric security system **1502** to notify a user who is attempting to make a large purchase that the user must provide a biometric sample to verify the user's identity. By notifying, fob **102** may be configured to provide an audible signal, visual signal, optical signal, mechanical signal, vibration, blinking, signaling and beeping, and/or provide any other notification to a user. Accordingly, fob user may provide such verification by submitting a biometric sample, for example placing his finger over biometric sensor **1504** and/or any other biometric security devices used in association with fob **102**. Biometric sensor **1504** may then digitize the biometric sample (e.g. fingerprint) and use the digitized sample for verification by any of the methods described herein. Once fob user's identity and/or fob **102** transponder identifier are verified, fob **102** may provide a transaction authorized signal to RF transponder **202** (and/or to transponder **220**) for forwarding to RFID reader **104**. RFID reader **104** may then provide the transaction authorized signal to POS device **110** in similar manner as is done with conventional PIN driven systems and POS device **110** may process the transaction under the merchant's business as usual standard. If fob **102** has been stolen, then fob user's identity may not be verified and the transaction may be cancelled. Additionally, one or more further security procedures may be triggered, such as, for example, fob **102** may deactivate, fob **102** may send a notification to a security vendor, fob **102** may be confiscated by the merchant and/or any other security procedures may be used.

In another exemplary embodiment, RFID reader **104** may be equipped with a biometric safeguard mechanism. For example, in one exemplary application of RFID reader **104**, RFID reader **104** may use biometric security system **1602** to authorize a transaction that violates an established rule, such as, for example, a purchase exceeding an established per purchase spending limit, a purchase exceeding a preset number of transactions and/or any other purchase exceeding a preset or established limit. Fob user, a third-party issuer system a third-party financial system, a company and/or any other entity or system may establish the preset limits. The limits may be used to prevent fraud, theft, overdrafts, and/or other non-desirable situations associated with financial and non-financial accounts. For example, if fob **102** is stolen and the thief tries to make a large purchase with the card, the biometric safeguard mechanism may prevent the purchase until fob user's identity is verified by biometric means.

In one example, where fob user is using a company-issued fob **102**, fob **102** may the have a pre-set limit of transactions that may be completed before biometric verification is required. If the user exceeds the transaction limit, RFID reader **104** may be configured to scan a biometric sample in order to verify the user's identity. Accordingly, the user may provide such verification by submitting a biometric sample, for example submitting a retinal scan to biometric sensor **1604**. RFID reader **104** may then digitize the biometric sample (e.g., retinal pattern) and use the digitized sample for verification by any of the methods described herein. Once fob user's identity and/or fob **102** transponder identifier are verified, RFID reader **104** may receive a transaction authorized signal from a security vendor authorized to give such a signal. RFID reader **104** may then provide the transaction authorized signal to POS device **110** in similar manner as is done with convention PIN driven systems and POS device **110** may process the transaction under the merchant's business as usual standard.

While the biometric safeguard mechanisms described herein use fingerprint scanning and retinal scanning for biometric sample verification for exemplification, any biometric sample may be submitted for verification, authorization and/or any other safeguard purpose. For example the present invention contemplates the use of voice recognition, facial and/or ear recognition, signature recognition, vascular patterns, DNA sampling, hand geometry, auditory emissions recognition, olfactory recognition, keystroke/typing recognition, iris scans, and/or any other biometric known in the art.

The preceding detailed description of exemplary embodiments of the invention makes reference to the accompanying drawings, which show the exemplary embodiment by way of illustration. While these exemplary embodiments are described in sufficient detail to enable those skilled in the art to practice the invention, it should be understood that other embodiments may be realized and that logical and mechanical changes may be made without departing from the spirit and scope of the invention. For example, the steps recited in any of the method or process claims may be executed in any order and are not limited to the order presented. Further, the present invention may be practiced using one or more servers, as necessary. Thus, the preceding detailed description is presented for purposes of illustration only and not of limitation, and the scope of the invention is defined by the preceding description, and with respect to the attached claims.

Benefits, other advantages, and solutions to problems have been described above with regard to specific embodiments. However, the benefits, advantages, solutions to problems, and any element(s) that may cause any benefit, advantage, or solution to occur or become more pronounced are not to be construed as critical, required, or essential features or elements of any or all the claims. As used herein, the terms "comprises," "comprising," or any other variations thereof, are intended to cover a non-exclusive inclusion, such that a process, method, article, or apparatus that comprises a list of elements does not include only those elements but may include other elements not expressly listed or inherent to such process, method, article, or apparatus. Further, no element described herein is required for the practice of the invention unless expressly described as "essential" or "critical."

What is claimed:

1. A Radio Frequency (RF) payment device comprising:

an RF transponder configured to receive a device authentication code from an RF Identification (RFID) reader, wherein the device authentication code is configured to facilitate authentication of the RF payment device;

a unique device encryption key corresponding to a device identification code associated with the RF payment device;

a voiceprint sensor configured to detect a proffered voiceprint sample to create proffered voiceprint sample data; and

a device authentication circuit configured to use the unique device encryption key to encrypt the device authentica-

tion code and a device account code associated with the RF payment device to create an encrypted device authentication code and an encrypted device account code;

wherein the RF transponder of the RF payment device is configured to transmit a transaction request comprising: the proffered voiceprint sample data, the device identification code associated with the RF payment device, the encrypted device authentication code associated with the RF payment device, and the encrypted device account code to the RFID reader.

2. The RF payment device of claim **1**, further comprising a verification device configured to enable the device authentication circuit in response to the proffered voiceprint sample data matching authenticated voiceprint sample data.

3. The RF payment device of claim **2**, further comprising a second RF transponder, wherein at least one of the RF transponder or the second RF transponder is configured to transmit an RFID reader authentication code to the RFID reader and receive an encrypted RFID reader authentication code from the RFID reader in response to the proffered voiceprint sample data matching the authenticated voiceprint sample data.

4. The RF payment device of claim **3**, further comprising an RFID reader decryption key, wherein the device authentication circuit is configured to use the RFID reader decryption key to decrypt the encrypted RFID reader authentication code received from the RFID reader in order to authenticate the RFID reader.

5. The RF payment device of claim **3**, wherein the voiceprint sensor comprises a switch configured to place the first and second RF transponders in at least one of a selectivity mode or an inclusivity mode, wherein the selectivity mode includes enabling purchase of an item using a selected account number and the inclusivity mode includes the first and second RF transponders in an operational mode permitting the first and second RF transponders to be responsive to RF interrogation and interrogation via a USB connector.

6. The RF payment device of claim **3**, wherein the voiceprint sensor is configured to store log data within the RF payment device, the log data comprising at least one of detected voiceprint sample data, processed voiceprint sample data or stored voiceprint sample data, and wherein the voiceprint sensor is further configured to employ a security procedure in response to the proffered voiceprint sample data differing from the log data.

7. The RF payment device of claim **1**, wherein the voiceprint sensor comprises at least one of an audio capture device, a microphone, a telephone, a cellular phone, or a voice recorder, wherein the voiceprint sensor is configured to detect and verify voiceprint characteristics comprising at least one of voice print waveforms in the time domain, energy content in the voice prints across the frequency domain, stochastic models of the voice print, or template models of the voice print.

8. A method comprising:

detecting a proffered voiceprint sample at a voiceprint sensor to create proffered voiceprint sample data using a processor, wherein the proffered voiceprint sample data is registered and used to facilitate a Radio Frequency (RF) transaction;

associating the proffered voiceprint sample data with at least one of an RF device, a user identifier, or a transaction account;

verifying the proffered voiceprint sample data to activate the RF device and to confirm the proffered voiceprint sample data to create registered voiceprint sample data;

receiving a transaction request from the RF device, wherein the transaction request comprises: transaction voiceprint sample data, a device identification code associated with the RF device, an encrypted device authentication code associated with the RF device, and an encrypted device account code associated with the RF device; and

authorizing the transaction request to facilitate the RF transaction.

9. The method of claim **8**, further comprising associating the registered voiceprint sample data with at least one of personal information, credit card information, debit card information, savings account information, or loyalty point information.

10. The method of claim **9**, further comprising associating the registered voiceprint sample data with second user information comprising at least one of personal information, credit card information, debit card information, savings account information, or loyalty point information.

11. The method of claim **8**, further comprising facilitating at least one of authorized access, activation of a second device, a financial transaction, or a non-financial transaction in response to the transaction voiceprint sample data matching the registered voiceprint sample data.

12. The method of claim **8**, further comprising:

transmitting a device authentication code from a sample receiver to the RF device;

receiving the encrypted device authentication code, second proffered voiceprint sample data, and the device identification code from the RF device;

decrypting the encrypted device authentication code using a unique device decryption key corresponding to the device identification code to create a decrypted device authentication code; and

authenticating the RF device in response to the second proffered voiceprint sample data matching the registered voiceprint sample data and in response to the decrypted device authentication code matching the device authentication code.

13. The method of claim **12**, further comprising:

receiving a reader authentication code from the RF device;

encrypting the reader authentication code using a reader encryption key to create an encrypted reader authentication code;

transmitting the encrypted reader authentication code to the RF device for authentication of the sample receiver;

receiving an encrypted device account code from the RF device upon the authentication of the sample receiver;

decrypting the encrypted device account code using the unique device decryption key to create a decrypted device account code; and

transmitting the decrypted device account code for processing of the transaction.

14. The method of claim **8**, further comprising:

receiving an RF device update request comprising at least one of a preloaded value update request or a reload protocol update request;

updating, in response to the RF device update request, at least one of a preloaded value data file or a reload protocol data file, wherein the preloaded value data file comprises a stored value;

requesting a funding source value from a first funding source and the preloaded value data file, wherein the requesting of the funding source value is in response to an instruction from the reload protocol data file;

updating the stored value with the funding source value; and

authorizing the merchant transaction request to facilitate the RF transaction, in response to the stored value being greater than the transaction value.

15. The method of claim **14**, wherein the reload protocol update request comprises at least one of a minimum depletion value update request, a time period update request, a number of occurrences update request, or a maximum value update request.

16. The method of claim **15**, further comprising determining if the RF transaction complies with a preset transaction limitation comprising at least one of a maximum transaction amount, a minimum transaction amount, a maximum number of transactions within a time period value, a maximum number of transactions value, a use by certain merchants criterion, a temporal limitation, or a use of non-monetary funds criterion.

17. The method of claim **16**, further comprising requiring second proffered voiceprint sample data to override the preset transaction limitation.

18. An authorized sample receiver (ASR) comprising:

a biometric sensor configured to receive a first proffered voiceprint sample to create first proffered voiceprint sample data, wherein the ASR is configured to register voiceprint sample data to facilitate a Radio Frequency (RF) transaction;

means for creating registered voiceprint sample data from the first proffered voiceprint sample data in response to second proffered voiceprint sample data associated with an RF device matching the first proffered voiceprint sample data;

an RF Identification (RFID) reader configured to receive a transaction request from the RF device, wherein the transaction request comprises: transaction voiceprint sample data, an encrypted device account code, an encrypted device authentication code associated with the RF device, and a device identification code associated with the RF device; and

an authentication circuit configured to decrypt the encrypted device account code and the encrypted device authentication code using a unique RF device decryption key corresponding to the device identification code, wherein the authentication circuit is further configured to authenticate the transaction request to facilitate the RF transaction.

19. The ASR of claim **18**, further configured to transmit a device authentication code to the RF device, receive the encrypted device authentication code from the RF device, and decrypt the encrypted device authentication code using the unique RF device decryption key to authenticate the RF device.

20. The ASR of claim **19**, further configured to receive an ASR authentication code from the RF device, encrypt the ASR authentication code, and transmit the encrypted ASR authentication code to the RF device to facilitate authentication of the ASR.

* * * * *