Ex. A

Comparison of U.S. Patent No. 10,791,808 and Kickstarter 2.0 ("Kane")

Prior Art Publication

As described in the following claim chart, all asserted claims of U.S. Patent No. 10,791,808 ("'808 Patent") are invalid in view of Kickstarter The Ridge Wallet 2.0 ("Kane") in view of the knowledge of a person of ordinary skill in the art and the references as detailed below.

The Ridge Wallet is described at https://www.kickstarter.com/projects/124039987/the-bridge-front-pocket-wallet (last updated June 11, 2014, last accessed July 16, 2023).

The Ridge Wallet 2.0 is described at https://www.kickstarter.com/projects/124039987/the-ridge-wallet-20 (last updated January 27, 2014, last accessed July 16, 2023) and was also captured by wayback machine at:

https://web.archive.org/web/20130903204002/https://www.kickstarter.com/projects/124039987/the-ridge-wallet-20.

Kane is prior art under 102(a)(1) because it is a printed publication available before the earliest claimed priority date for the Asserted Claims.

The other prior art references used in the various combinations below include U.S. Patent Application Publication 2006/0010661 ("Murphy"), U.S. Patent 5,103,884 ("Roman"), and U.S. Patent 9,125,465 ("Beckley").

Ex. A
Comparison of U.S. Patent No. 10,791,808 and Kickstarter 2.0 ("Kane")

CL. NO.	'808 CLAIM ELEMENT	EXEMPLARY PRIOR ART DISCLOSURE
1pre	A compact wallet, comprising:	Kane is a compact wallet. https://www.kickstarter.com/projects/124039987/the-ridge-wallet-20 "More than a minimalist wallet. With an integrated elastic track, The Ridge 2.0 can accommodate various numbers of cards without losing elasticity; providing an extremely thin wallet that isn't limited in its capacity."
1a	at least two rigid plates interposed to sandwich cardlike contents there between, each rigid plate having a longitudinal extent;	This limitation is present in Kane. 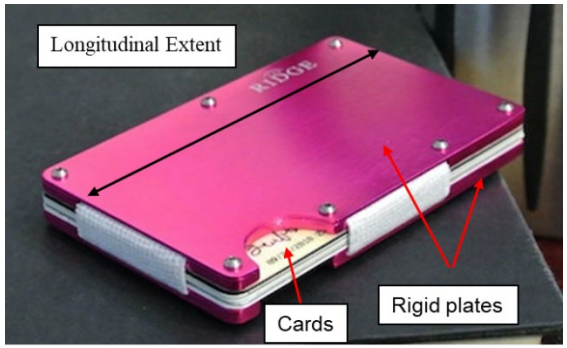

CL. NO.	'808 CLAIM ELEMENT	EXEMPLARY PRIOR ART DISCLOSURE
1b	at least one encircling elastic band interposed with the at least two rigid plates along longitudinal extents thereof to bias them inwardly and securely hold the card-like contents while providing elastic volume there between for adding or removing contents;	Kane contains this limitation. The elastic band stretches to accommodate cards. 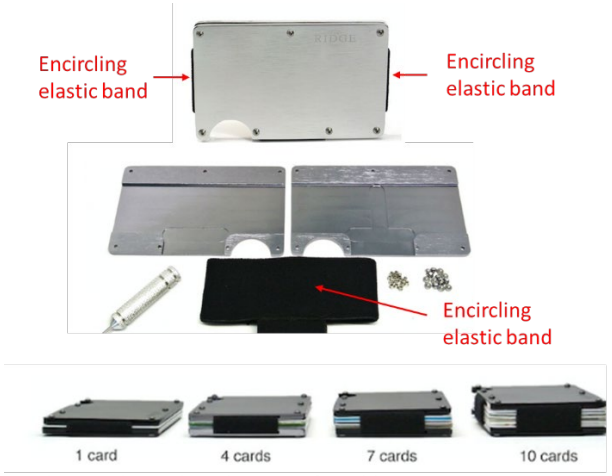 elastic volume there between for adding or removing contents;
1c	a channeling means configured to minimize the profile of the wallet and hold position of the at least one encircling elastic band with respect to each rigid plate while allowing freedom for the dynamic extension and contraction of the band over the entire running length thereof; and,	Kane contains this limitation. A groove in the rigid plate running along the length captures the elastic band. The band can stretch and contract and slide within the groove over the length of the band. 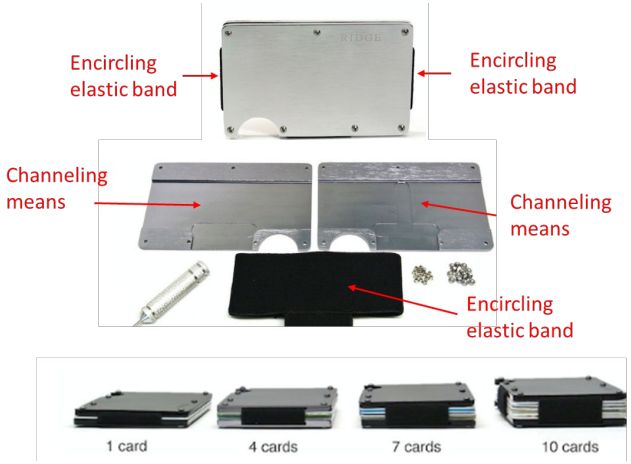

CL. NO.	'808 CLAIM ELEMENT	EXEMPLARY PRIOR ART DISCLOSURE
1d	an auxiliary feature removably attached to at least one of the at least two rigid plates, the auxiliary feature having a tang insertable into a recess formed inside the at least two rigid plates, the tang having a hook, the hook extending at an angle to the tang, the hook engaging an undercut of the recess to prevent inadvertent dislodgement of the auxiliary feature from the recess,	Kane combined with Murphy, Beckley or Roman contains this limitation. It would be obvious to use the removably attached money clip of Beckley or clip of Murphy with the compact wallet of Kane. It was well known in the art to use a removable clip in conjunction with a compact wallet for added flexibility and functionality. For example, Beckley teaches a removable clip 3 that is used with a compact wallet as shown in Figure 1 and 6B below. FIG.1 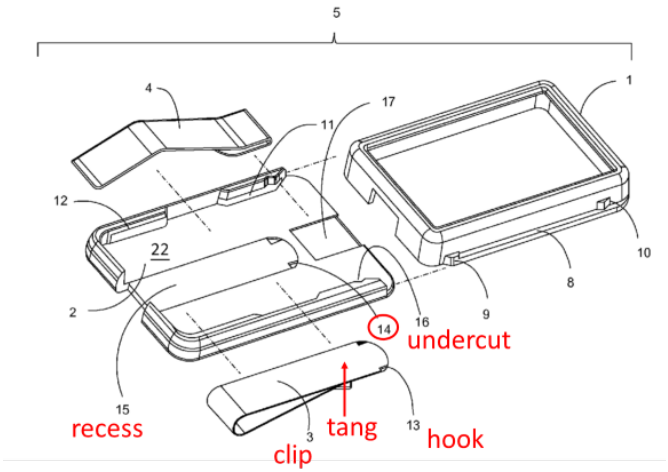 FIG. 6B 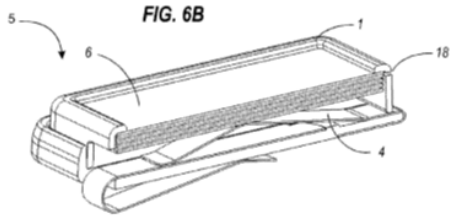

CL. NO.	'808 CLAIM ELEMENT	EXEMPLARY PRIOR ART DISCLOSURE
		"The clip 3 is assembled to the base 2 by inserting the clip 3 into a depression 15. It is held in place by a pair of barbs seen at 13 mated into a set of cavities 14 on the base 2." Beckley, 4:30-40. Depression 15 is the recess. The hook 13 that extends at an angle to the tang engages the undercut (14 or wall of 14) to hold the clip in place and prevent inadvertent dislodgement of the clip 3 (auxiliary feature) from the recess. A POSITA knew of the desirability of removable clips on a compact wallet and would be motivated to incorporate the removable clip of Beckley into the compact wallet of Kane and could easily do so. The recess would be between the lamina of the rigid plate of Kane and the undercut would be in one of the lamina. Another example of a removable clip used with a compact wallet in the prior art is shown in Roman Fig. 9. 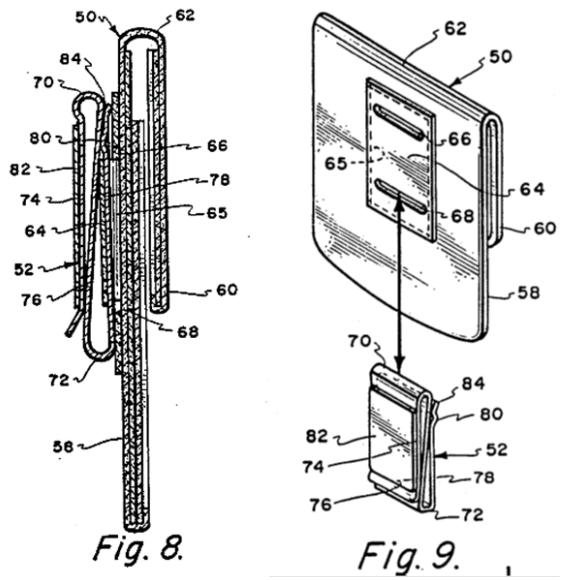 As explained in Roman, an "object of the present invention is to provide a wallet, or device for carrying money and other valuables which has a removable clip which can be

CL. NO.	'808 CLAIM ELEMENT	EXEMPLARY PRIOR ART DISCLOSURE
		used in a normal fashion as a money clip, but also can be used to attach to the wallet to carry it in a concealed fashion. Still another object of the present invention is to provide a unique wallet having a removable clip which is small and compact for carrying money and credit cards which and is easily accessible without removal from the clipped position." Roman 1:54-64. In particular, "backplate 78 [tang] has a dimpled rib 80 providing a bight [hook] against middleplate 76 to help retain the clip [auxiliary feature] in the pocket 65 [recess] formed by slot 66 [undercut] and 68." Roman 4:14-17. A POSITA knew of the desirability of removable clips on a compact wallet as taught by Roman and would be motivated to incorporate the removable clip of Roman into the compact wallet of Kane and could easily do so. The recess would be between the two lamina of the rigid plate of Kane and the undercut would be in one of the lamina. Another example of a removable clip that uses a tang with a hook at an angle to engage an undercut of a recess is shown in Figure 5 of Murphy. The tang is inserted into the recess 9 and the clip is prevented from inadvertently being removed by the hook that engages the undercut of the recess. 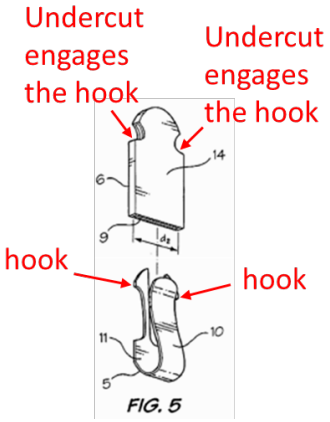 While the clip of Murphy is shown as clipping to the cuff of a pant leg (that can have variable thickness), the clip 10 is similar to that used for a money clip or a clip that could attach a wallet to a belt for example. A POSITA would also be motivated to use the tang

CL. NO.	'808 CLAIM ELEMENT	EXEMPLARY PRIOR ART DISCLOSURE
		and hook arrangement to secure a removable clip or accessory to the wallet (the combination described above). In addition, the abstract describes the invention as "[a] device purposed to adjust the size or shape of a garment or other item, or to be worn itself as an accessory." Abstract, Murphy. A POSITA would be motivated to incorporate a removable clip such as that of Murphy into the compact wallet of Kane. The recess would be between the two lamina and the undercut would be placed in one of the lamina. In Kane, a POSITA wanting to add a removable clip could incorporate the removable clips or their combinations discussed above that utilize a tang with a hook that extends at an angle and engages the undercut of a recess.
1e	whereby, card-like contents may be carried with minimal silhouette on or with a person while allowing expandable capacity and ready access to individual contents from between the at least two rigid plates.	This limitation is shown in Kane. The expandable capacity is shown with the increasing number of cards. 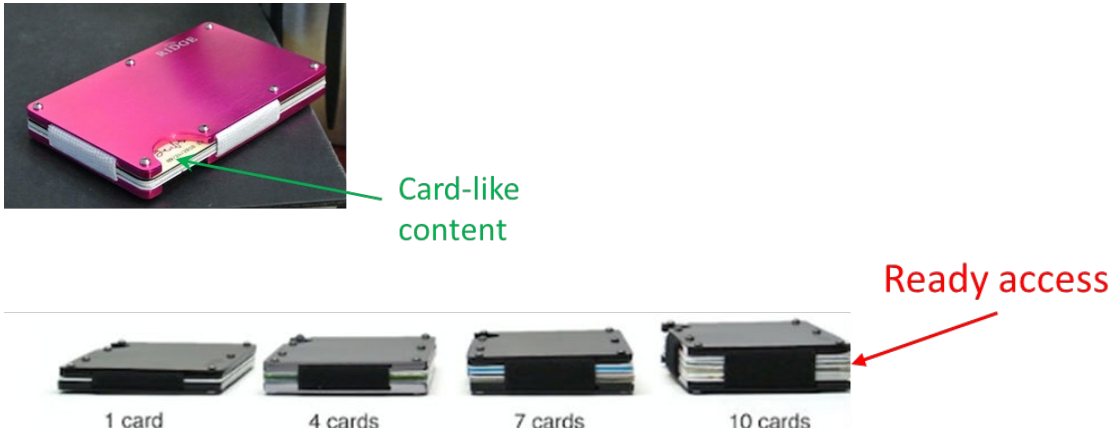
2	The compact wallet of claim 1, wherein the channeling means is a longitudinal groove in a first	This limitation is present in Kane. The channeling means is a groove along the length of the rigid plate, in the first lamina of two laminae that are screwed together in a laminate construction of the rigid plate. The two rigid plates have the same construction with the same longitudinal groove for slidingly receiving the encircling elastic band.

CL. NO.	'808 CLAIM ELEMENT	EXEMPLARY PRIOR ART DISCLOSURE
	lamina of a laminate construction of each rigid plate, the groove slidingly receiving one part of the at least one encircling elastic band.	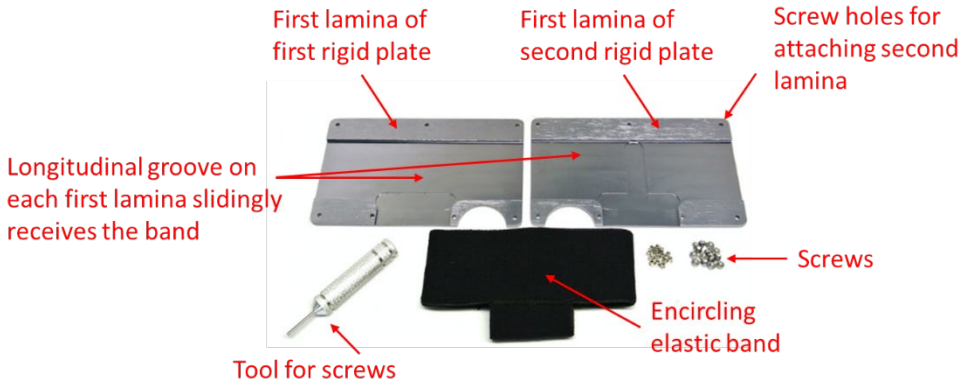 "The Ridge 2 is available with two different types of money clips or without a clip." 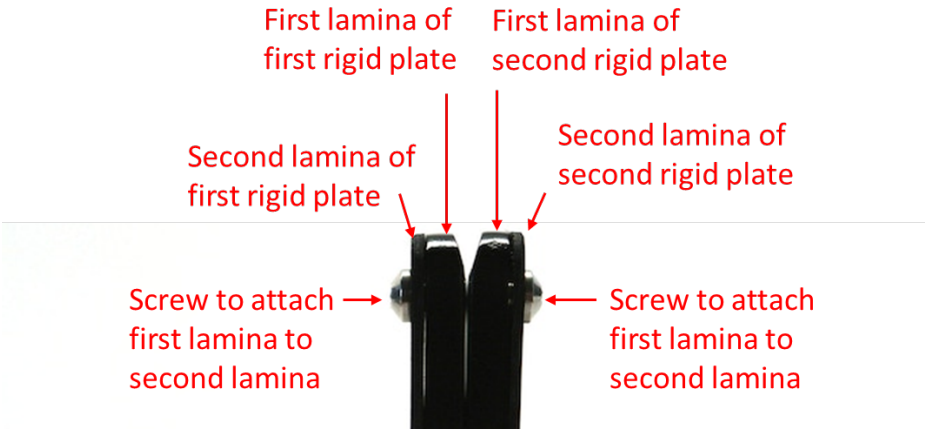
3	The compact wallet of claim 2, wherein a second lamina of the laminate construction of each rigid plate is removably attached to the first lamina to	This limitation is present in Kane. Faceplates are the second lamina and are removably attached to the first lamina with the groove (track) for the elastic band. The band is held between the lamina with the groove and the faceplate. The track is made from anodized aircraft grade aluminum which is a smooth surface allowing the band to glide.

CL. NO.	'808 CLAIM ELEMENT	EXEMPLARY PRIOR ART DISCLOSURE
	hold the at least one elastic band in capture and provide a smooth surface for glide purposes	<u>From 'what's new' section of Kane:</u> Interchangeable faceplates (swap materials and money clips) Custom hex screws instead of rivets <u>From 'Construction' section of Kane:</u> "The track runs along two hollow interior plates machined from anodized aircraft grade aluminum." "The interior plates have been tapered at the edge to allow easier access to the middle cards, and re-machined with threads for seven hex screws on either side that turn the wallet into a "system" that can be completely disassembled by the user to replace the elastic and exchange outer plates for greater personalization." Kane 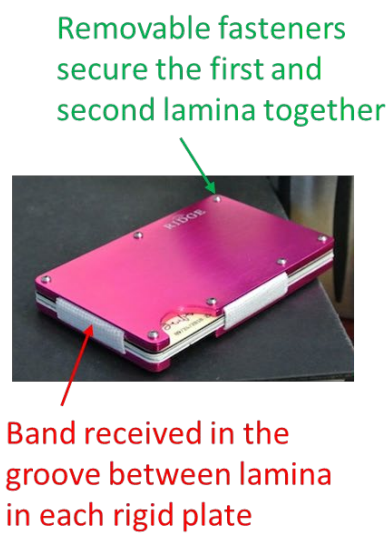 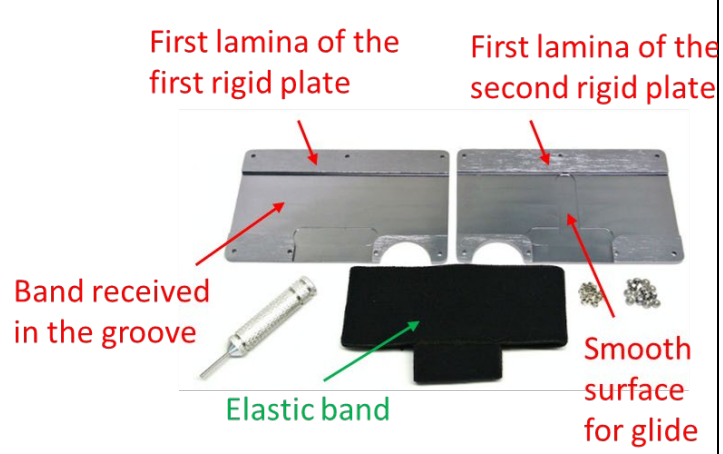
4	The compact wallet of claim 3, wherein the second lamina is	This limitation is present in Kane.

CL. NO.	'808 CLAIM ELEMENT	EXEMPLARY PRIOR ART DISCLOSURE
	attached to the first lamina by screws.	From 'what's new' section: • Interchangeable faceplates (swap materials and money clips) • Custom hex screws instead of rivets 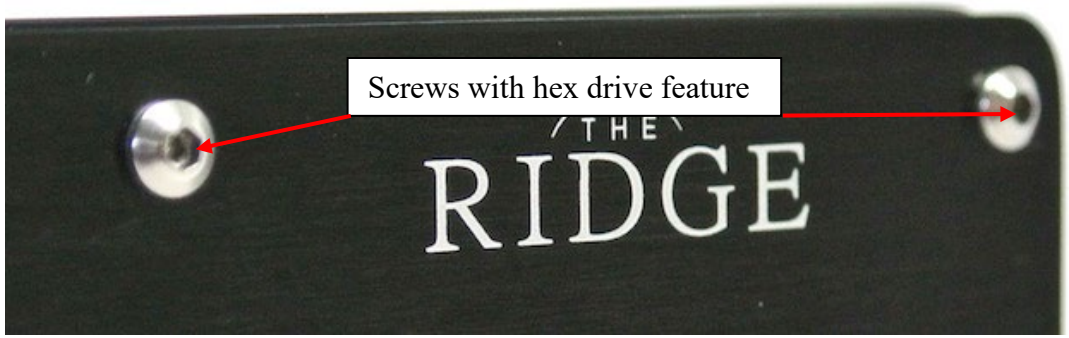
5	The compact wallet of claim 3, wherein the second lamina is attached to the first lamina by pressure sensitive adhesive mean	It would have been obvious to use pressure sensitive adhesive rather than screws as one of a limited number of options a POSITA would choose from to fasten the lamina of Kane together.
6	The compact wallet of claim 1, wherein each rigid plate is comprised of metal for RFID protection.	This limitation is present in Kane. The plates of Kane are made of metal (aluminum) and provide RFID protection. "RFID blocking (wireless identity theft): Radio Frequency Identification is becoming an increasingly common feature on credit cards that allows the user to wirelessly "swipe" their card. However, the technology is inherently vulnerable as it lends itself to wireless identity theft. The Ridge's aluminum interior plates block RFID, keeping your information safe." Kane.

CL. NO.	'808 CLAIM ELEMENT	EXEMPLARY PRIOR ART DISCLOSURE
		"You can then choose between Titanium, Aluminum, or Carbon Fiber for the outer faceplates." Kane.
7	The compact wallet of claim 1, wherein each rigid plate is metalized for RFID protection.	It would have been obvious to use metalized plates instead of the metal plates of Kane as one of the well-known ways to provide RFID protection in a wallet. Beckley also teaches using metalized plates for RFID protection: "Examples of suitable RFID shielding materials include metal-coated elastomers such as aluminized Mylar and copper-coated plastic sheets and films." Beckley 6:6-10. A POSITA would know that a metallized plate also is rigid and protects against RFID signals and would be interchangeable with the plates of Kane. This could have the benefit of weight, fabricating and material cost savings.
8	The compact wallet of claim 3, wherein at least one of the first or second lamina of each rigid plate is comprised of metal.	This limitation is present in Kane. "The track runs along two hollow interior plates machined from anodized aircraft grade aluminum."
9	The compact wallet of claim 1, further comprising a first elastic strap positioned over the ends of the at least two rigid plates	This limitation is present in Kane.

CL. NO.	'808 CLAIM ELEMENT	EXEMPLARY PRIOR ART DISCLOSURE
	transverse to the longitudinal extents, the positioning functioning to retain the cardlike contents from that end.	It is unclear if "transverse to the longitudinal extents" modifies "ends" or "strap." However, either way, this limitation is met. An elastic strap is positioned over both a short end and long end to retain cards. 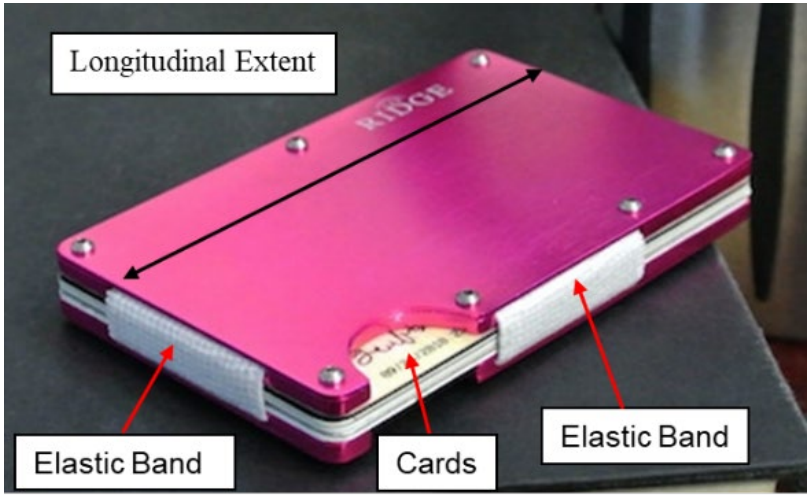
10	The compact wallet of claim 1, further comprising a second elastic strap positioned over an outside surface of one of the at least two rigid plates to hold additional contents on the outside surface.	Adding a second elastic strap outside of the plates of Kane as done in Minn would have been obvious. As explained in Minn: "Personal items, such as paper money 22, credit cards 24, driver's license, identification cards, membership cards, business cards, or the like, or any combination thereof may be compressively held in-between plates 12 and 14 or may be held outside of either plate 12 or 14." Minn 2:21-25. This would allow a desirable second compartment for personal items and the existing groove could secure the band.

CL. NO.	'808 CLAIM ELEMENT	EXEMPLARY PRIOR ART DISCLOSURE
		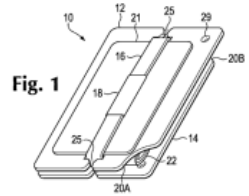 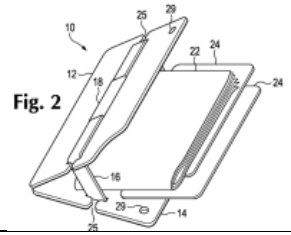
11	The compact wallet of claim 1, wherein the card-like contents comprise one or more of a credit card, a driver's license, an ID card, a business card, an affiliation card, a currency bill, a loyalty card, a coupon, a receipt or a personal paper.	This limitation is met in Kane. It would be obvious to put any one of those similarly sized items in the wallet. Driver's license or other ID card, etc.
12	The compact wallet of claim 1, further comprising aligned finger notches through proximal ends of the rigid plates to expose an edge of the card-like contents for the purpose of pushing the edge to elevate the	This limitation is present in Kane. Finger notches through the proximal ends of the rigid plates expose an edge of cards for the purpose of pushing the edge to elevate contents into view and provide a fulcrum to lever the proximal ends. "The Thumb indentation at the lower left of the wallet allows you to easily push your cards up and select the correct one." Kane Kane:

CL. NO.	'808 CLAIM ELEMENT	EXEMPLARY PRIOR ART DISCLOSURE
	contents into view through distal ends of the rigid plates, said edge providing a fulcrum to lever the proximal ends together for the purpose of fanning the distal ends apart in display of the contents.	1:44 still frame from video Aligned finger notches 1:45 still frame from video 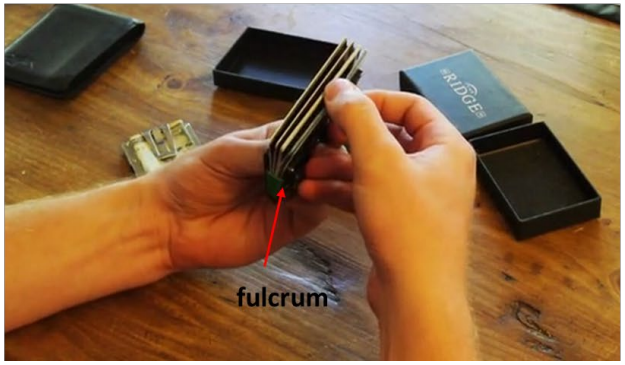 Fanning distal ends apart to display contents
13	The compact wallet of claim 1, wherein the encircling elastic band is comprised of woven elastic fabric	This limitation is present in Kane. The images show a woven elastic band:

CL. NO.	'808 CLAIM ELEMENT	EXEMPLARY PRIOR ART DISCLOSURE
		  From 'Construction' section: "The Integrated Elastic Track can expand to hold up to 12 cards and then immediately contract to hold a single card securely. And should the elastic ever wear out, you can easily replace it." Even if the woven elastic band were not visible in the images, it would have been obvious to make the elastic band from woven elastic fabric as known by a person of ordinary skill in the art or as shown in Preston Hall.

CL. NO.	'808 CLAIM ELEMENT	EXEMPLARY PRIOR ART DISCLOSURE
14pre	A compact wallet, comprising:	Kane shows a compact wallet. https://www.kickstarter.com/projects/124039987/the-ridge-wallet-20 "More than a minimalist wallet." Kane "Designed to be an encompassing alternative to a bulky traditional leather wallet and a dedicated minimalist wallet that can only hold a few cards. With an integrated elastic track, The Ridge 2.0 can accommodate various numbers of cards without losing elasticity; providing an extremely thin wallet that isn't limited in it's capacity." Kane.

CL. NO.	'808 CLAIM ELEMENT	EXEMPLARY PRIOR ART DISCLOSURE
14a	at least two rigid plates interposed to sandwich cardlike contents there between, each rigid plate having a groove along a longitudinal extent thereof,	Kane contains this limitation. 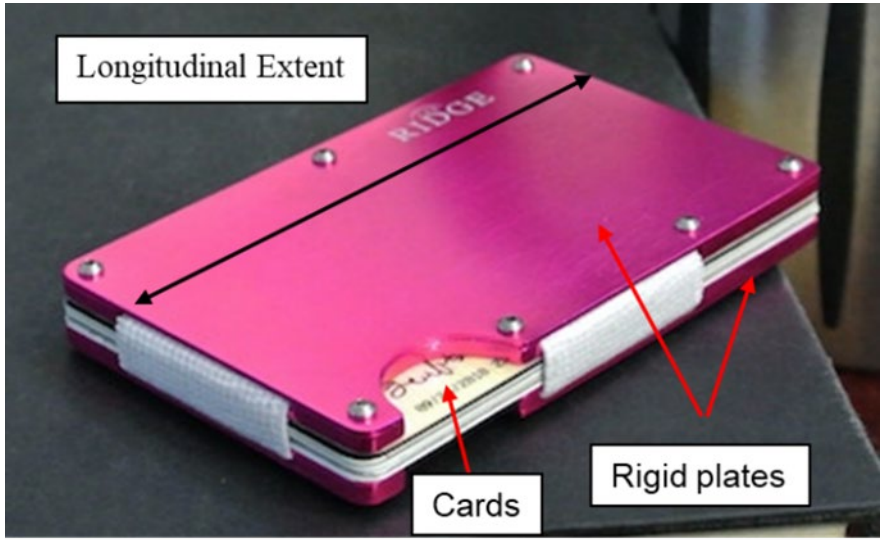 Kane contains two rigid plates, each with the structure below. 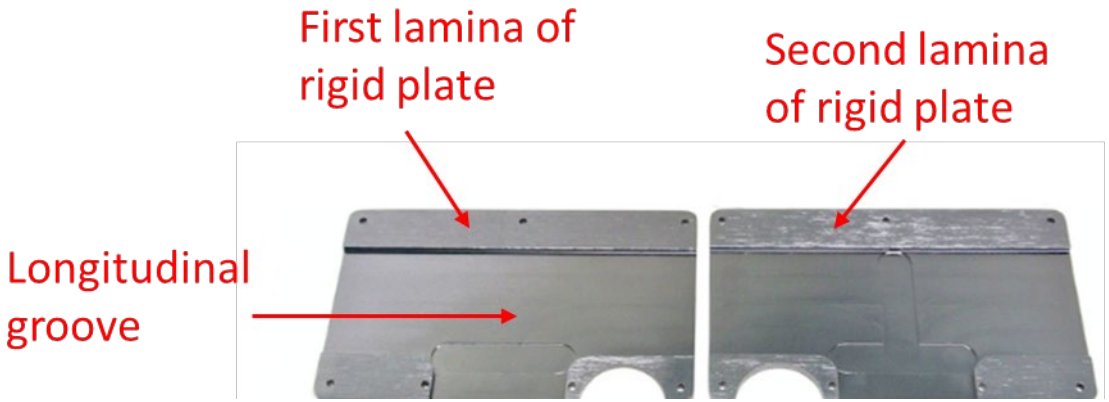

CL. NO.	'808 CLAIM ELEMENT	EXEMPLARY PRIOR ART DISCLOSURE
14b	at least one encircling elastic band slidingly interposed in the grooves to bias the at least two rigid plates inwardly and securely hold the card-like contents while providing elastic volume there between for adding or removing contents, the grooves configured to hold position of the at least one encircling elastic band with respect to each rigid plate while allowing freedom for the dynamic extension and contraction of the band over the entire running length thereof; and	Kane contains this limitation. A elastic band is captured in the groove of each rigid plate and biases the rigid plates inwardly. The band can stretch and contract over its length to accommodate more or less cards. 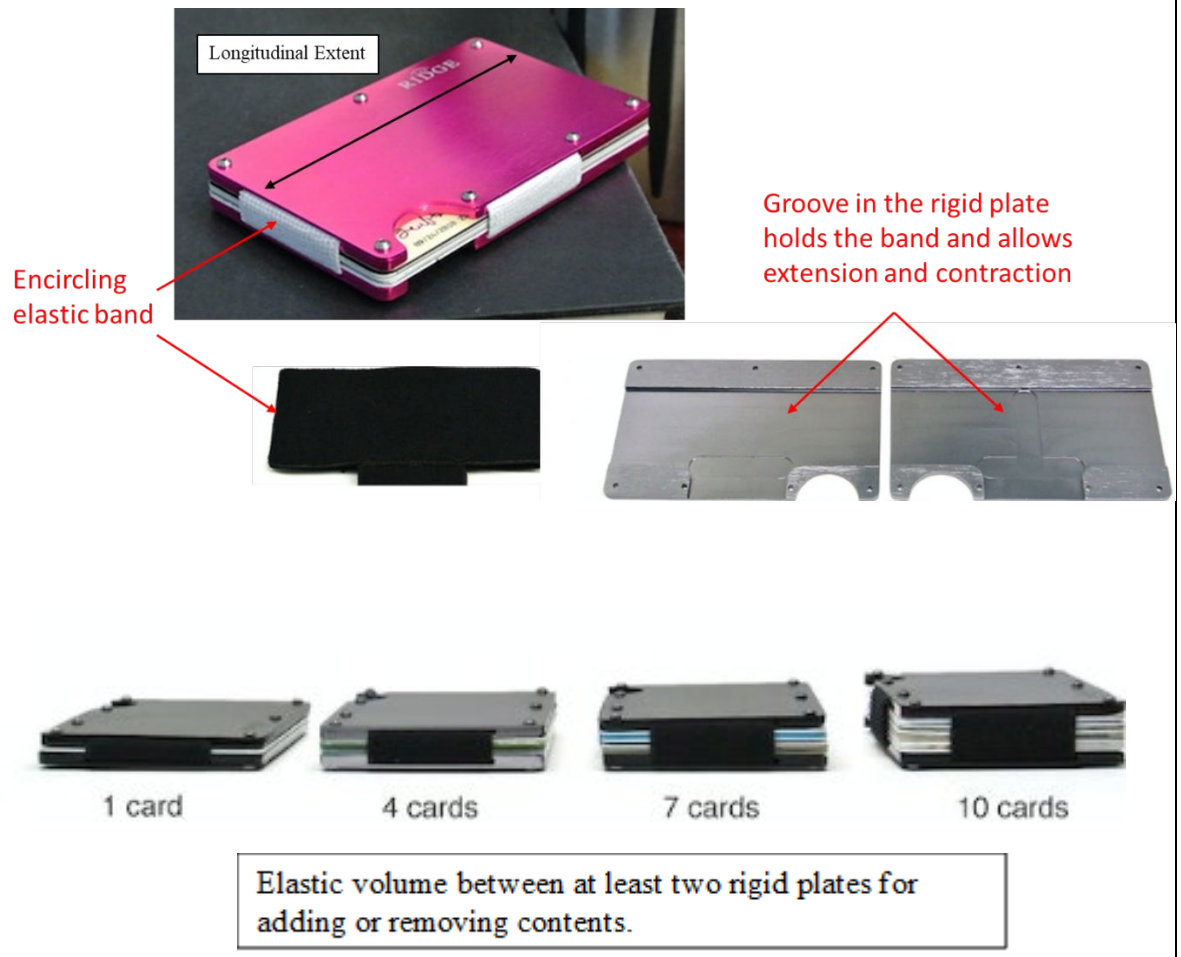

CL. NO.	'808 CLAIM ELEMENT	EXEMPLARY PRIOR ART DISCLOSURE
14c	a recess formed inside at least one of the at least two rigid plates, the recess operable to receive a tang of an auxiliary feature, the recess having an undercut operable to engage a hook of the tang to prevent inadvertent dislodgement of the auxiliary feature from the recess when the auxiliary feature is removably positioned in at least one of the at least two rigid plates, the hook extending at an angle to the tang,	Kane combined with Murphy, Beckley or Roman contains this limitation. It would be obvious to use the removably attached money clip of Beckley or clip of Murphy with the compact wallet of Kane. It was well known in the art to use a removable clip in conjunction with a compact wallet for added flexibility and functionality. For example, Beckley teaches a removable clip 3 that is used with a compact wallet as shown in Figure 1 and 6B below. FIG.1 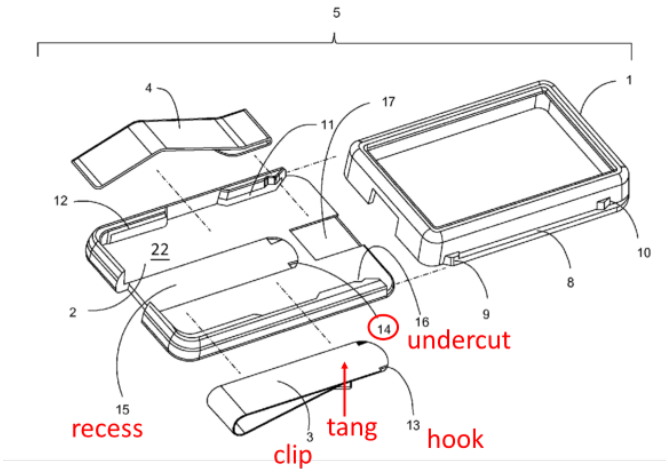 FIG. 6B 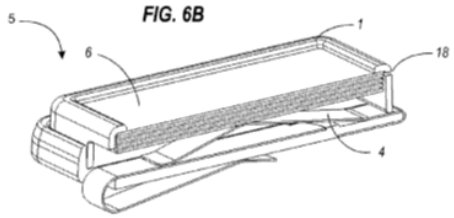

CL. NO.	'808 CLAIM ELEMENT	EXEMPLARY PRIOR ART DISCLOSURE
		"The clip 3 is assembled to the base 2 by inserting the clip 3 into a depression 15. It is held in place by a pair of barbs seen at 13 mated into a set of cavities 14 on the base 2." Beckley, 4:30-40. Depression 15 is the recess. The hook 13 that extends at an angle to the tang engages the undercut (14 or wall of 14) to hold the clip in place and prevent inadvertent dislodgement of the clip 3 (auxiliary feature) from the recess. A POSITA knew of the desirability of removable clips on a compact wallet and would be motivated to incorporate the removable clip of Beckley into the compact wallet of Kane and could easily do so. The recess would be between the lamina of the rigid plate of Kane and the undercut would be in one of the lamina. Another example of a removable clip used with a compact wallet in the prior art is shown in Roman Fig. 9. 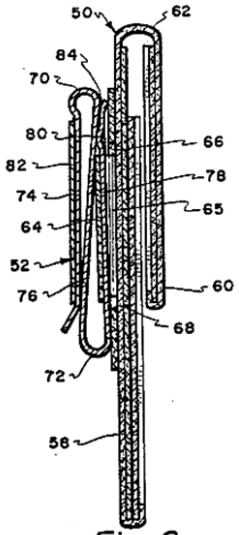 Fig. 8. 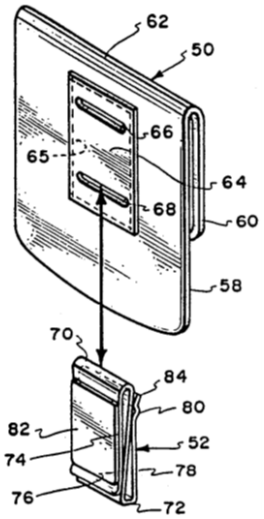 Fig. 9. As explained in Roman, an "object of the present invention is to provide a wallet, or device for carrying money and other valuables which has a removable clip which can be

CL. NO.	'808 CLAIM ELEMENT	EXEMPLARY PRIOR ART DISCLOSURE
		used in a normal fashion as a money clip, but also can be used to attach to the wallet to carry it in a concealed fashion. Still another object of the present invention is to provide a unique wallet having a removable clip which is small and compact for carrying money and credit cards which and is easily accessible without removal from the clipped position." Roman 1:54-64. In particular, "backplate 78 [tang] has a dimpled rib 80 providing a bight [hook] against middleplate 76 to help retain the clip [auxiliary feature] in the pocket 65 [recess] formed by slot 66 [undercut] and 68." Roman 4:14-17. A POSITA knew of the desirability of removable clips on a compact wallet as taught by Roman and would be motivated to incorporate the removable clip of Roman into the compact wallet of Kane and could easily do so. The recess would be between the two lamina of the rigid plate of Kane and the undercut would be in one of the lamina. Another example of a removable clip that uses a tang with a hook at an angle to engage an undercut of a recess is shown in Figure 5 of Murphy. The tang is inserted into the recess 9 and the clip is prevented from inadvertently being removed by the hook that engages the undercut of the recess. 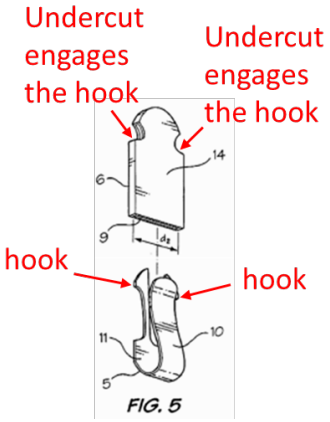 While the clip of Murphy is shown as clipping to the cuff of a pant leg (that can have variable thickness), the clip 10 is similar to that used for a money clip or a clip that could attach a wallet to a belt for example. A POSITA would also be motivated to use the tang

CL. NO.	'808 CLAIM ELEMENT	EXEMPLARY PRIOR ART DISCLOSURE
		and hook arrangement to secure a removable clip or accessory to the wallet (the combination described above). In addition, the abstract describes the invention as "[a] device purposed to adjust the size or shape of a garment or other item, or to be worn itself as an accessory." Abstract, Murphy. A POSITA would be motivated to incorporate a removable clip such as that of Murphy into the compact wallet of Kane. The recess would be between the two lamina and the undercut would be placed in one of the lamina. In Kane, a POSITA wanting to add a removable clip could incorporate the removable clips or their combinations discussed above that utilize a tang with a hook that extends at an angle and engages the undercut of a recess.
14d	whereby, card-like contents may be carried with minimal silhouette on or with a person while allowing expandable capacity and ready access to individual contents from between the at least two rigid plates.	Kane teaches this limitation. Images show the walled being carried with a minimal silhoutte. The second image is a still image from the video at 37 seconds. The expandable capacity and ready access can be seen from the sequence of images with increasingly larger numbers of cards between the rigid plates.

CL. NO.	'808 CLAIM ELEMENT	EXEMPLARY PRIOR ART DISCLOSURE
		0:37 still frame from video
15	The compact wallet of claim 14, wherein the groove is in a first lamina of a laminate construction of each rigid plate, the groove slidingly receiving one part of the at least one encircling elastic band	This limitation is present in Kane. Kane refers to the groove as a track. From 'Construction' section: "The track runs along two hollow interior plates machined from anodized aircraft grade aluminum." Kane

CL. NO.	'808 CLAIM ELEMENT	EXEMPLARY PRIOR ART DISCLOSURE
		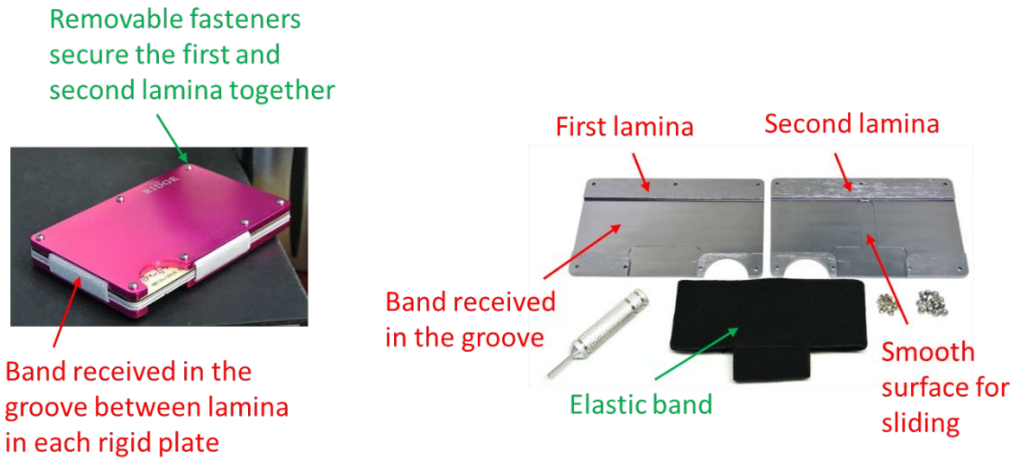
16	The compact wallet of claim 15, wherein a second lamina of the laminate construction of each rigid plate is removably attached to the first lamina to capture the at least one elastic band and provide a smooth surface for glide	This limitation is present in Kane. Faceplates are the second lamina and are removably attached to the first lamina with the groove (track) for the elastic band. The screws and tool to remove the faceplate is also pictured below. The band is held between the lamina with the groove and the faceplate. The track is made from anodized aircraft grade aluminum which is a smooth surface allowing the band to glide. <u>From 'what's new' section of Kane:</u> • Interchangeable faceplates (swap materials and money clips) • Custom hex screws instead of rivets <u>From 'Construction' section of Kane:</u> "The track runs along two hollow interior plates machined from anodized aircraft grade aluminum." "The interior plates have been tapered at the edge to allow easier access to the middle cards, and re-machined with threads for seven hex screws on either side that turn the wallet into a "system" that can be completely disassembled by the user to replace the elastic and exchange outer plates for greater personalization." Kane

CL. NO.	'808 CLAIM ELEMENT	EXEMPLARY PRIOR ART DISCLOSURE
		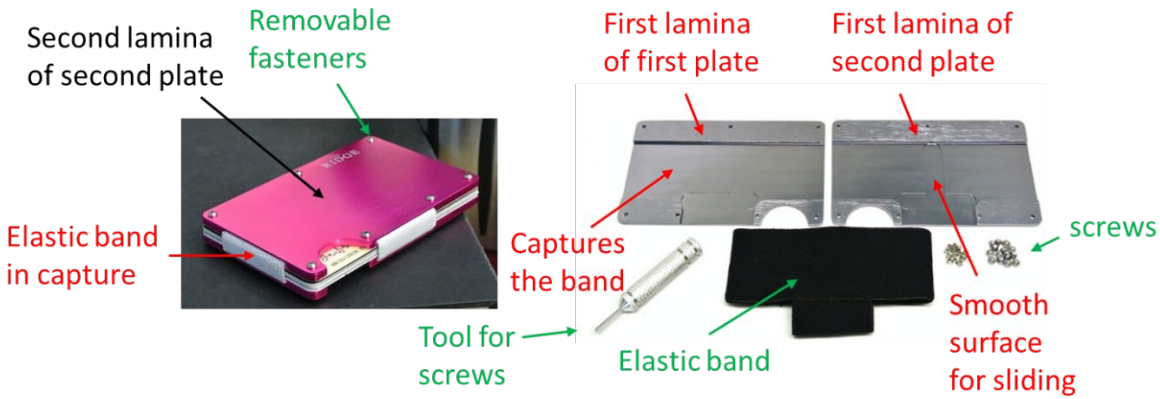
17	The compact wallet of claim 16, wherein the second lamina is attached to the first lamina by screws	This limitation is present in Kane. For both rigid plates the first lamina with the groove is attached to the second lamina (faceplate) with screws. From 'what's new' section: Custom hex screws instead of rivets 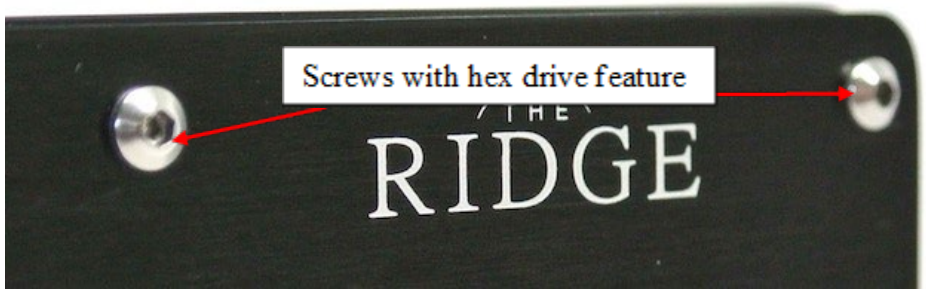
18	The compact wallet of claim 1, wherein each rigid plate is comprised of metal for RFID protection.	See identical claim 6.

CL. NO.	'808 CLAIM ELEMENT	EXEMPLARY PRIOR ART DISCLOSURE
19pre	A method of making a modular compact wallet, comprising the steps:	See Claim 1 pre, 14 pre
19a	providing at least two rigid plates interposed to sandwich card-like contents there between, each rigid plate having a groove along a longitudinal extent thereof;	See Claim 14a
19b	at least one encircling elastic band slidingly interposed in the grooves to bias the at least two rigid plates inwardly and securely hold the card-like contents while providing elastic volume there between for adding or removing contents, the grooves configured to hold position of the at least one encircling elastic band with respect to each rigid plate while allowing freedom for the dynamic extension and contraction of the band over the entire running length thereof,	See Claim 14b
19c	at least one groove additionally having at least one recess positioned outbound of the elastic band;	While the term outbound is not used in the specification, to the extent outbound means outside of the elastic band, this limitation is present in the obviousness combination discussed with the clip of Murphy incorporated. The recess to receive the hook of the tang of Murphy is positioned outbound of the elastic band as the width of the tang minus the hook of Murphy matches the width of the groove (which prevents side to side motion of the clip).

CL. NO.	'808 CLAIM ELEMENT	EXEMPLARY PRIOR ART DISCLOSURE
		This limitation is obvious over the discussed combination with the clip of Beckley as it would be obvious to position the barbs of Beckley outbound of the elastic band to reduce the depth of the groove and improve the structural rigidity of the plate. This limitation is obvious over the discussed combination with the clip of Roman as it would be desirable to place the hook/dimpled rib of Roman outbound of the elastic band as is common to reduce the overall depth.
19d	providing a first auxiliary feature having at least one tang;	See Claim 1d ,14c
19e	inserting, removably, the at least one tang of the first auxiliary feature into the at least one recess to make the first auxiliary feature available at an outside face of at least one of the two rigid plates;	See Claim 1d, 14c. In the combinations discussed (with either Beckley, Roman or Murphy) the clip is available at an outside face of one of the rigid plates. 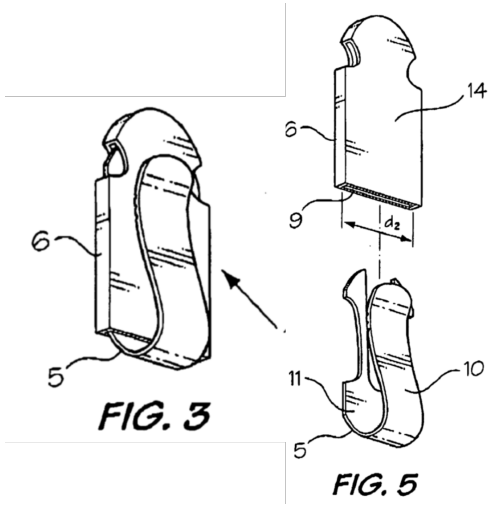 FIG. 3 and FIG. 5 of Murphy showing the clip on the outside face

CL. NO.	'808 CLAIM ELEMENT	EXEMPLARY PRIOR ART DISCLOSURE
		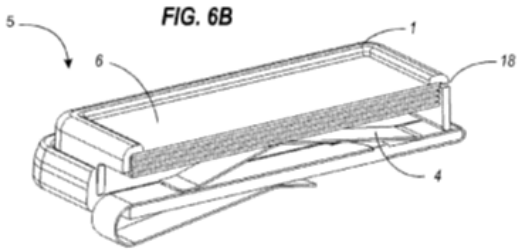 FIG. 6b of Beckley showing the clip in cross section on the outside face. 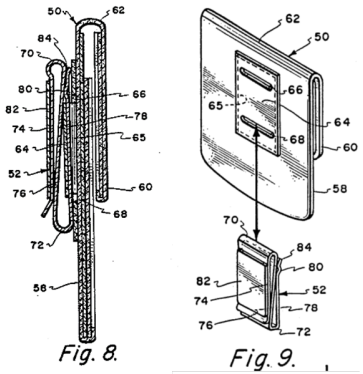 Fig. 8 and Fig. 9 of Roman showing the clip on the outside face.
19f	removing, selectively, the first auxiliary feature;	See Claim 1d, 14c
19g	providing, selectively, at least a second auxiliary feature having at least one tang; and inserting, removably, the at least one tang of the second auxiliary feature into the at least one recess to make the second auxiliary feature available at	See Claim 1d, 14c. For each of the combinations discussed, it would be obvious to include a second clip arranged the same way as the first but on the opposite rigid plate.

CL. NO.	'808 CLAIM ELEMENT	EXEMPLARY PRIOR ART DISCLOSURE
	an outside face of at least one of the two rigid plates, the at least one recess having an undercut operable to engage a hook of the tang to prevent inadvertent dislodgement of the second auxiliary feature from the at least one recess, the hook extending at an angle to the tang, the at least one recess receiving the tang being disposed inside at least one of the two rigid plates;	
19h	whereby, card-like contents may be carried with minimal silhouette on or with a person while allowing expandable capacity and ready access to individual contents positioned interiorly to the at least two rigid plates and proving additional functionality from at least one auxiliary feature positioned exteriorly thereto.	See Claim 1e, 14d
20	The method of claim 19, wherein the at least one recess has an undercut and the at least one tang has a hook, the hook and undercut interpositioned to secure the at least one auxiliary feature against inadvertent dislodgement.	See Claim 1d, 14c. In each combination the hook and undercut are interpositioned to secure the tang.
21	The method of claim 20, wherein at least one of the auxiliary features is a money clip.	In each of the combinations, it was obvious to implement the auxiliary feature as a money clip. For Beckley and Roman the clip is already a money clip and as discussed, it would have been obvious to a POSITA to implement the clip of Murphy onto the modified

CL. NO.	'808 CLAIM ELEMENT	EXEMPLARY PRIOR ART DISCLOSURE
		wallet of Minn as a money clip because a money clip was a desirable often implemented feature of a compact wallet.
22	The method of claim 19, wherein the groove is in a first lamina of a laminate construction of each rigid plate and the at least one recess is in at least one of the first lamina.	This limitation is present in each of the combinations discussed. See Claim 1d, 14c, 15 where the groove of Claim 22 is the recess of Claim 1d/14c/15 and the recess of Claim 22 is the undercut of Claim 1d/14c/15. As a reminder the laminate structure from Coates has been incorporated into the wallet of Minn modified by Podwika with an undercut as taught in Murphy/Roman/Beckley. 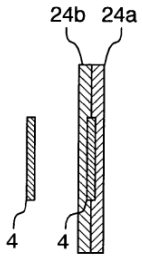 FIG.13 FIG. 13 of Coates
23	The method of claim 22, wherein a second lamina of the laminate construction of each rigid plate captures the at least one elastic band and the at least one tang when removably attached to the first lamina and facilitates placement and removal of the at least one elastic band and the at least one tang when removed from the first lamina.	As discussed, for all the combinations, a second lamina captures the band. The tang is placed similar to shown in Figure 1 and 6B of Beckley.

CL. NO.	'808 CLAIM ELEMENT	EXEMPLARY PRIOR ART DISCLOSURE
		FIG.1 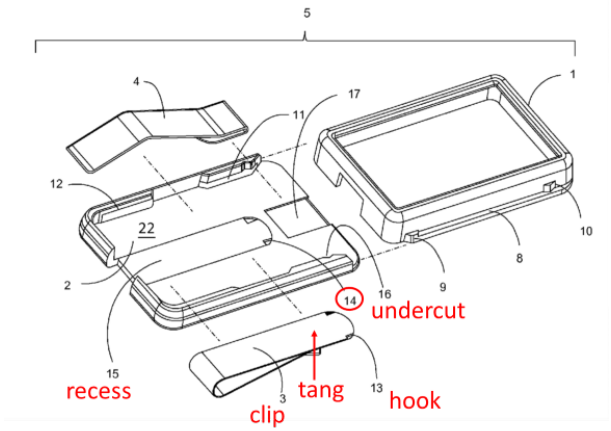 FIG. 6B 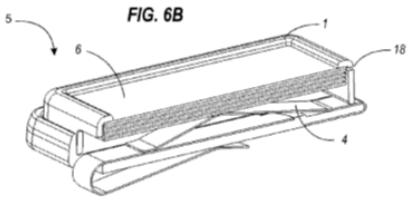 The band is lined up and placed on top of the tang in the groove and then the second lamina is attached.
24	The method of claim 23, wherein the second lamina is attached to the first lamina by screws.	See Claim 4, 17, 1c