Ex. B
Ground 2: Minn in view of Podwika, Coates and Buckley or Murphy or Minn in view of Podwida, Coates, Preston-Hall and Buckley or Murphy

Prior Art Publication

As described in the following claim chart, all asserted claims of U.S. Patent No. 10,791,808 ("the '808 Patent") are obvious over U.S. 9,125,464 ("Minn") in combination with the knowledge of a person of ordinary skill in the art and/or other prior art references as detailed in the following chart, for the reasons explained in the chart.

The other prior art references used in the various combinations below include U.S. Patent No. 5,944,080 ("Podwika"), U.S. Patent 7,527,081 ("Coates"), U.S. Patent Application Publication 2006/0010661 ("Murphy"), U.S. Patent 8,381,360 ("Preston-Hall"), and U.S. Patent 9,125,465 ("Beckley").

A POSITA would be motivated to and be easily able to incorporate the teachings of Podwika and Coates into the compact wallet of Minn. Coates teaches using a groove to secure an elastic band that can extend and contract dynamically over the entire running length of the band like that shown in Minn; and Coates teaches that the groove can be enclosed. A POSITA would also be motivated to incorporate a removable clip into the modified wallet of Minn. Beckley and Murphy both teach removable clips that can be incorporated into the modified wallet of Minn. The resulting combination contains all the limitations of the challenged claims.

In particular, the challenged claims of the '808 Patent are obvious in view of Minn in view of Podwika and Coates in further view of Beckley or Murphy.

To the extent that a woven elastic band is not specifically taught in Minn, Challenged Claim 13 of the '808 Patent is obvious in view of Minn in view of Podwika and Coates in further view of Beckley or Murphy in further view of Preston-Hall.

CL. NO.	'808 CLAIM ELEMENT	EXEMPLARY PRIOR ART DISCLOSURE
1pre	A compact wallet, comprising:	Minn discloses a compact wallet as in Figure 1 and Figure 2: 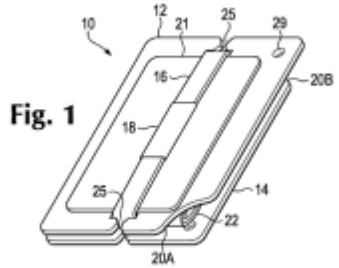 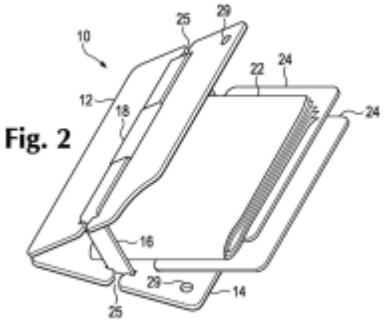

		Coates also discloses a compact wallet as in Figures 1 and 2: 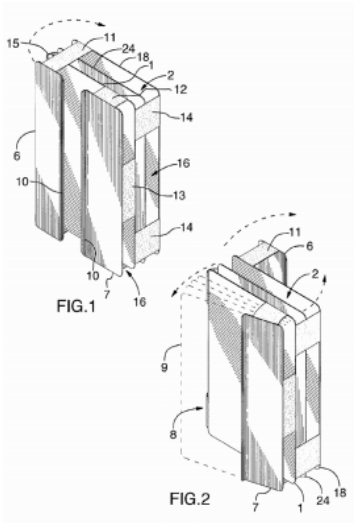 Podwika also discloses a compact wallet as in Figure 1: 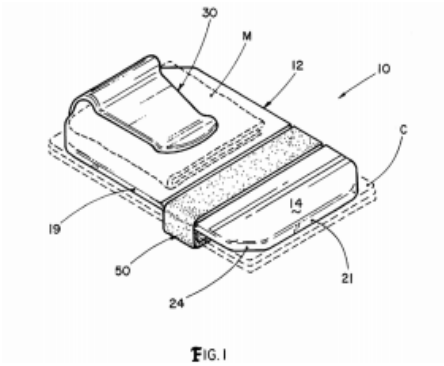 As explained in Podwika, "[t]he present invention relates generally to money clips and the like, and more specifically the present invention relates to devices for holding money and cards." Podwika 1:9- 11. "It is another object of the invention to provide a holder for cards and paper money which is compact when filled with varying amounts of cards and money." Podwika 2:27-29. Beckley also discloses a compact wallet.

CL. NO.	'808 CLAIM ELEMENT	EXEMPLARY PRIOR ART DISCLOSURE
1a	at least two rigid plates interposed to sandwich cardlike contents there between, each rigid plate having a longitudinal extent;	Minn discloses two rigid plates with longitudinal extents to sandwich cardlike contents: 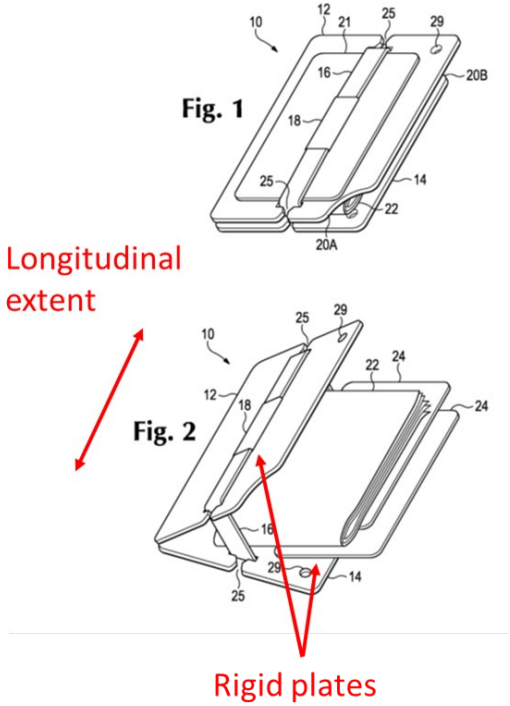 "Referring to FIGS. 1-4, a low profile wallet 10 comprises two metal and/or carbon fiber plates 12 and 14 held together with an elastic strap 16. Personal items, such as paper money 22, credit cards 24, driver's license, identification cards, membership cards, business cards, or the like, or any combination thereof maybe compressively held in-between plates 12 and 14." Minn 2:19-25. The modification to Minn based on Podwika and Coates (and either Beckley or Murphy) as discussed above also meets this limitation.

CL. NO.	'808 CLAIM ELEMENT	EXEMPLARY PRIOR ART DISCLOSURE
1b	at least one encircling elastic band interposed with the at least two rigid plates along longitudinal extents thereof to bias them inwardly and securely hold the card-like contents while providing elastic volume there between for adding or removing contents;	Minn discloses this element as seen in Fig.1 and Fig. 2 and the associated description. 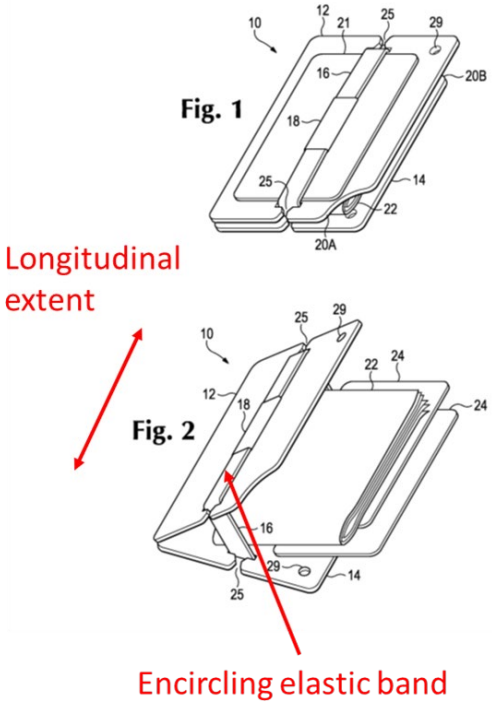 "Referring to FIGS. 1-4, a low profile wallet 10 comprises two metal and/or carbon fiber plates 12 and 14 held together with an elastic strap 16. Personal items, such as paper money 22, credit cards 24, driver's license, identification cards, membership cards, business cards, or the like, or any combination thereof maybe compressively held in-between plates 12 and 14." Minn 2:19-25. The modification to Minn based on Podwika and Coates (and either Beckley or Murphy) as discussed above also meets this limitation.

CL. NO.	'808 CLAIM ELEMENT	EXEMPLARY PRIOR ART DISCLOSURE
1c	a channeling means configured to minimize the profile of the wallet and hold position of the at least one encircling elastic band with respect to each rigid plate while allowing freedom for the dynamic extension and contraction of the band over the entire running length thereof; and,	Minn modified with the groove of Podwika discloses a channeling means. FIG. 1 of Podwika illustrates that the longitudinal elastic band of Minn can be captured by a longitudinal groove in each plate instead of by slots 25 and notches 28 taught in Minn. This would be desirable to minimize the profile of the wallet. Like Minn and Podwika, the combination of Minn and Podwika also allows freedom for the dynamic extension and contraction of the band over the entire running length. The groove of Podwika is shown below in FIG. 1 of Podwika. 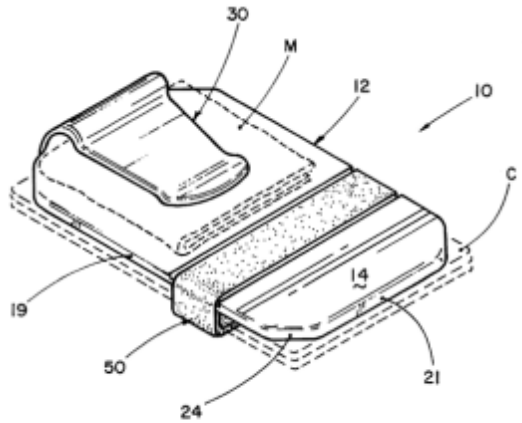 FIG. 1 As explained in Podwika, the recess 26 is sized and configured to receive a portion of an elastic retaining band 50. The elastic retaining band 50 is formed into a continuous loop that encircles the base 12. A POSITA would be motivated to utilize this over the longitudinal extent of the rigid plates of Minn in place of slots 25 and notches 28 of Minn.

CL. NO.	'808 CLAIM ELEMENT	EXEMPLARY PRIOR ART DISCLOSURE
		Furthermore, based on Coates, instead of being exposed, the groove could be made between two lamina to protect the band as seen in Figure 13 where 24a and 24b are the lamina of the rigid plate and 4 is the elastic band: 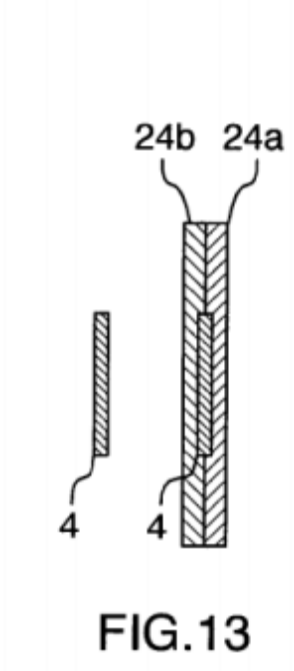 FIG.13 While Coates teaches that the lamina can be attached by adhesive, a POSITA would be motivated to instead attach the laminas by screws to preserve the operation of the band of Minn (and Podwika). Furthermore, it would have been desirable to use screws so as to allow replacement of the elastic band or the outer lamina (additionally for changing the visual appearance as described in Minn 2:51-56). As also noted by the Patent Office, "Coates teaches other fasteners, it would have been obvious to one of ordinary skill in the art to provide screws or adhesive attaching the two plates." September 19, 2018 Office Action, '596 Prosecution History.

CL. NO.	'808 CLAIM ELEMENT	EXEMPLARY PRIOR ART DISCLOSURE
1d	an auxiliary feature removably attached to at least one of the at least two rigid plates, the auxiliary feature having a tang insertable into a recess formed inside the at least two rigid plates, the tang having a hook, the hook extending at an angle to the tang, the hook engaging an undercut of the recess to prevent inadvertent dislodgement of the auxiliary feature from the recess,	The clip of Beckley or Murphy discloses this element. It was well known in the art to use a removable clip in conjunction with a compact wallet. For example, Beckley teaches a removable clip 3 that is used with a compact wallet as shown in Figure 1 and 6B below. FIG.1 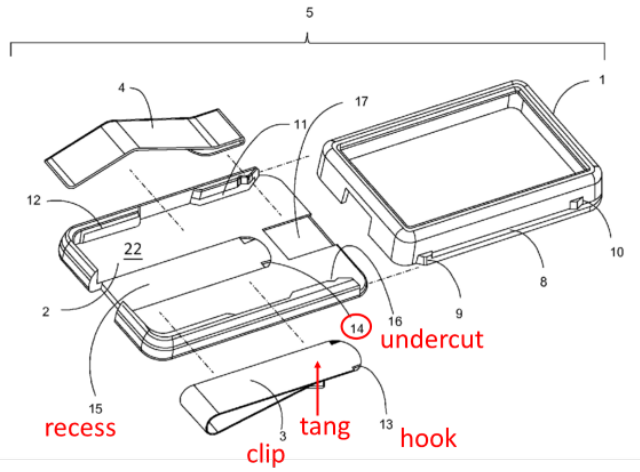 FIG. 6B 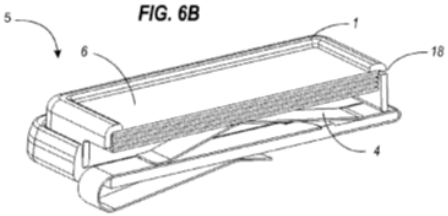 "The clip 3 is assembled to the base 2 by inserting the clip 3 into a depression 15. It is held in place by a pair of barbs seen at 13 mated into a set of cavities 14 on the base 2." Beckley, 4:30-40. Depression 15 is the recess. The hook 13 that extends at an angle to the tang engages the undercut (14 or wall of 14) to hold the clip in place and prevent inadvertent dislodgement of the clip 3 (auxiliary feature) from the recess. A POSITA knew of the desirability of removable clips on a compact wallet and would be motivated to incorporate the removable clip of Beckley into the compact wallet (and this would be an additional reason to use screws rather than glue or welding to attach the lamina together in addition to being able to replace the outer lamina and or band) and could easily do so. The recess would be between the lamina of the rigid plate of the modified wallet of Minn and the undercut would be in one of the lamina.

Another example of a removable clip that uses a tang with a hook at an angle to engage an undercut of a recess is shown in Figure 5 of Murphy. The tang is inserted into the recess 9 and the clip is prevented from inadvertently being removed by the hook that engages the undercut of the recess.

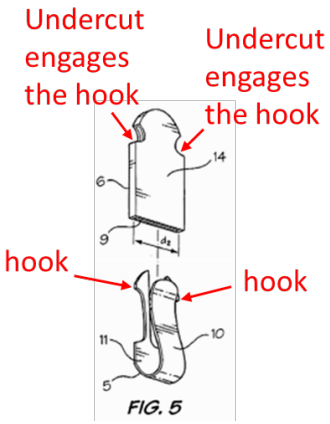

While the clip of Murphy is shown as clipping to the cuff of a pant leg (that can have variable thickness), the clip 10 is similar to that used for a money clip or a clip that could attach a wallet to a belt for example. A POSITA would also be motivated to use the tang and hook arrangement to secure a removable clip or accessory to the wallet (the combination described above). In addition, the abstract describes the invention as "[a] device purposed to adjust the size or shape of a garment or other item, or to be worn itself as an accessory." Abstract, Murphy.

A POSITA would be motivated to incorporate a removable clip such as that of Murphy into the compact wallet (and this would be an additional reason to use screws rather than glue or welding to attach the lamina together in addition to being able to replace the outer lamina and or band). The recess would be between the two lamina and the undercut would be placed in one of the lamina.

In the wallet of Minn that has the groove of Podwika in the laminate structure of Coates, a POSITA wanting to add a removable clip could incorporate any of the clips or their combinations as discussed above.

Ex. B

Comparison of U.S. Patent No. 10,791,808 and US 9,125,464 ("Minn")

CL. NO.	'808 CLAIM ELEMENT	EXEMPLARY PRIOR ART DISCLOSURE
1e	whereby, card-like contents may be carried with minimal silhouette on or with a person while allowing expandable capacity and ready access to individual contents from between the at least two rigid plates.	The combination discussed results in this limitation. The groove of Podwika minimized the silhouette and does not adversely affect the already present expandable capacity and ready access of Minn. "It is another object of the invention to provide a holder for cards and paper money which is compact when filled with varying amounts of cards and money. It is a further object of the invention to provide a holder for cards which can retain a plurality of cards equally as well as it can retain a single card." Podwika 2:27-33
2	The compact wallet of claim 1, wherein the channeling means is a longitudinal groove in a first lamina of a laminate construction of each rigid plate, the groove slidingly receiving one part of the at least one encircling elastic band.	As discussed, the combination that utilizes the groove of Pokwika with the laminate construction of Coates (attached with screws rather than adhesive) contains this element. The elastic band is shown in FIG. 13 and FIG. 4 as 4 and the lamina are 24a and 24b. 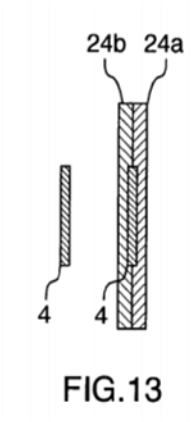 FIG.13 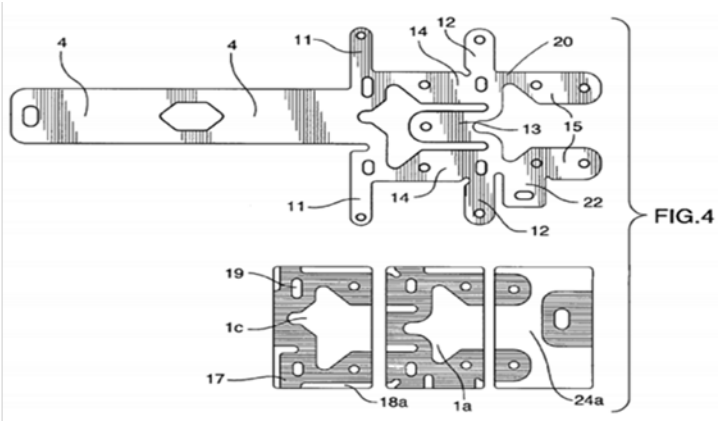 FIG.4

CL. NO.	'808 CLAIM ELEMENT	EXEMPLARY PRIOR ART DISCLOSURE
3	The compact wallet of claim 2, wherein a second lamina of the laminate construction of each rigid plate is removably attached to the first lamina to hold the at least one elastic band in capture and provide a smooth surface for glide purposes	As discussed, a POSITA would use screws in the combination discussed to attach the lamina in order to allow replacement of the elastic band or outer lamina (for example for damage or simply for changing the appearance). The second lamina holds the band in place and provides a smooth glide surface. 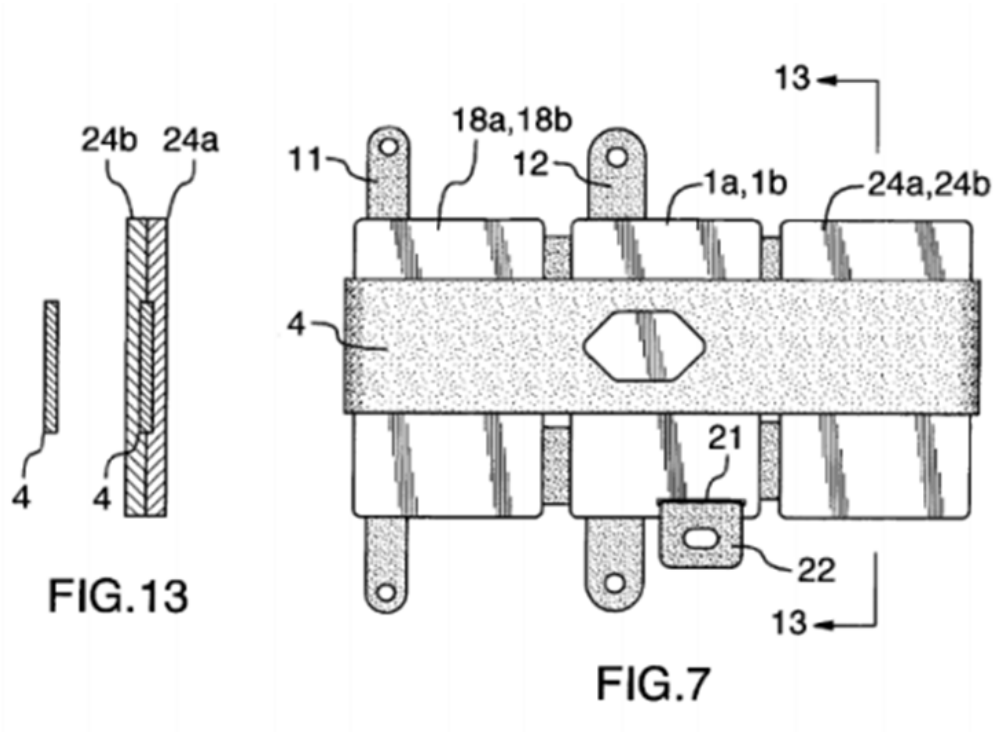

Ex. B
Comparison of U.S. Patent No. 10,791,808 and US 9,125,464 ("Minn")

CL. NO.	'808 CLAIM ELEMENT	EXEMPLARY PRIOR ART DISCLOSURE
4	The compact wallet of claim 3, wherein the second lamina is attached to the first lamina by screws.	As discussed, a POSITA would use screws in the combination discussed to attach the lamina in order to preserve the operation of the band and allow replacement of the elastic band or outer lamina (for example for damage or simply for changing the appearance). As also noted by the Patent Office, "Coates teaches other fasteners, it would have been obvious to one of ordinary skill in the art to provide screws or adhesive attaching the two plates." September 19, 2018 Office Action, '596 Prosecution History.
5	The compact wallet of claim 3, wherein the second lamina is attached to the first lamina by pressure sensitive adhesive mean	As discussed, Coates teaches this option of attaching the lamina.
6	The compact wallet of claim 1, wherein each rigid plate is comprised of metal for RFID protection.	This limitation is disclosed in Minn and in the modification of Minn discussed. "Referring to FIGS. 1-4 a low profile wallet 10 comprises two metal and/or carbon fiber plates 12." Minn, 2:19-20. "Wallet 10 may use a metal material for plates 12 and 14, such as aluminum or steel. The metal material may block RFID signals and prevent unauthorized access to the information contained on credit cards 24. In one example, wallet 10 may use an aircraft grade aluminum 6061 with an anodized or powder coat paint finish for plates 12 and 14." Minn, 4:46-51. Minn also discusses the benefit of using metal plates for RFID blocking: "Known metal wallets can retain personal items such as credit cards and money within a relatively low profile and provide RFID blocking." Minn 1: 26-30.

7	The compact wallet of claim 1, wherein each rigid plate is metalized for RFID protection.	This limitation is obvious based on Minn and in the modification of Minn discussed. "Referring to FIGS. 1-4 a low profile wallet 10 comprises two metal and/or carbon fiber plates 12." Minn, 2:19-20. "Wallet 10 may use a metal material for plates 12 and 14, such as aluminum or steel. The metal material may block RFID signals and prevent unauthorized access to the information contained on credit cards 24. In one example, wallet 10 may use an aircraft grade aluminum 6061 with an anodized or powder coat paint finish for plates 12 and 14." Minn, 4:46-51. Minn also discusses the benefit of using metal plates for RFID blocking: "Known metal wallets can retain personal items such as credit cards and money within a relatively low profile and provide RFID blocking." Minn 1: 26-30. Referring to FIG. 5, wallet 10 also may use carbon fiber sheets 44A-44D for plates 12 and 14. A center metal fabric layer 46 may sandwich in-between carbon fiber sheets 44A 44D to provide anti-RFID blocking. In one example, metal layer 46 may comprise an aluminum foil or any other material that provides shielding against electro-magnetic interference (EMI), radio frequency interference (RFI) microwave, and electro-static discharge (ESD). Beckley also teaches using metalized plates for RFID protection: "Examples of suitable RFID shielding materials include metal-coated elastomers such as aluminized Mylar and copper-coated plastic sheets and films." Beckley 6:6-10. A POSITA would know that a metallized plate also is rigid and protects against RFID signals.

8	The compact wallet of claim 3, wherein at least one of the first or second lamina of each rigid plate is comprised of metal.	As discussed, this limitation is obvious and present in the combination of Minn described. Coates discusses using metal for the lamina of the rigid plate: "In the embodiment illustrated relatively thin panels 1, 3, 6, 7, 18 and 24 are made of two panel laminations 1a-b,3a-b,6a-b,7a-b, 18a-band 24a–b of sheet metal such as titanium where the recesses 17 and protrusions 19 are etched in the titanium sheet metal. Minn also discusses using metal for the rigid plates: "Referring to FIGS. 1-4 a low profile wallet 10 comprises two metal and/or carbon fiber plates 12." Minn, 2:19-20. "Wallet 10 may use a metal material for plates 12 and 14, such as aluminum or steel. The metal material may block RFID signals and prevent unauthorized access to the information contained on credit cards 24. In one example, wallet 10 may use an aircraft grade aluminum 6061 with an anodized or powder coat paint finish for plates 12 and 14." Minn, 4:46-51. Minn also discusses the benefit of using metal plates for RFID blocking: "Known metal wallets can retain personal items such as credit cards and money within a relatively low profile and provide RFID blocking." Minn 1: 26-30.
9	The compact wallet of claim 1, further comprising a first elastic strap positioned over the ends of the at least two rigid plates transverse to the longitudinal extents, the positioning functioning to retain the cardlike contents from that end.	It is unlcear if "transverse to the longitudinal extents" modifies "ends" or "strap." However, either way, this limitation is met. Modifies ends: As can be seen in Minn and Coates, the location and width of the elastic strap serves to retain the cardlike contents from the short end. The combination described where the strap of Minn is enclosed in a groove between laminates also contains this limitation. FIG. 1 Coates:

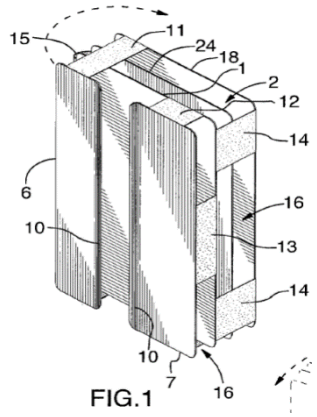

FIG.1

FIG. 1 and FIG. 2 of Minn:

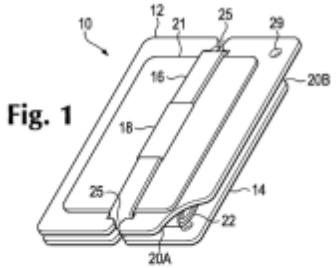

Fig. 1

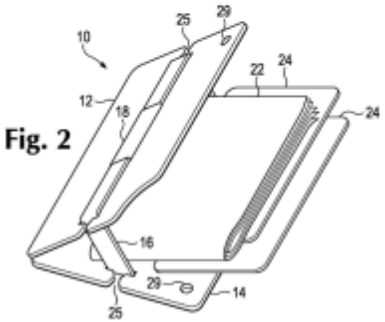

Fig. 2

Modifies strap:

		It would have been obvious to utilize an additional elastic strap over a long end of the plates to prevent cards from escaping in that direction. This can be seen in Coates and Podwika and would be easy to implement in the wallet of Minn. Podwika FIG 1. 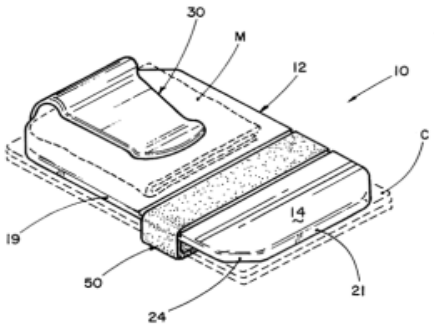 FIG. 1 Coates FIG. 1: 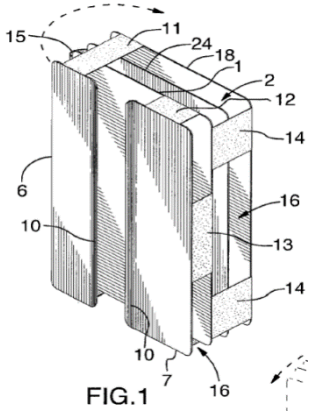 FIG.1

10	The compact wallet of claim 1, further comprising a second elastic strap positioned over an outside surface of one of the at least two rigid plates to hold additional contents on the outside surface.	A POSITA would have found it obvious to incorporate a second elastic strap over the outside of one of the rigid plates to hold additional contents as shown in Fig. 1 and Fig. 2 of Minn and in Podwika. The strap could simply be fixed to the outside of the rigid plate. "Personal items, such as paper money 22, credit cards 24, driver's license, identification cards, membership cards, business cards, or the like, or any combination thereof may be compressively held in-between plates 12 and 14 or may be held outside of either plate 12 or 14." Minn 2:21-25. 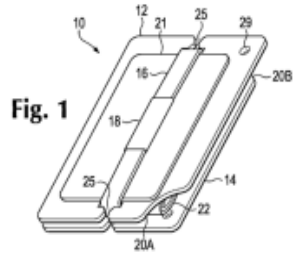 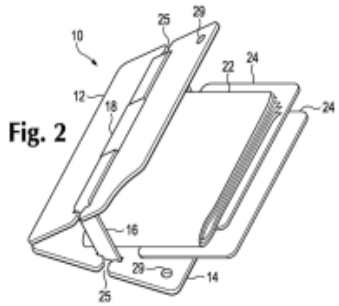 Minn Fig. 1 and Fig. 2
11	The compact wallet of claim 1, wherein the card-like contents comprise one or more of a credit card, a driver's license, an ID card, a business card, an affiliation card, a currency bill, a loyalty card, a coupon, a receipt or a personal paper.	Minn and the modification to Minn based on Podwika and Coates (and either Beckley, Roman or Murphy) as discussed above also meets this limitation. Minn explains that: "Personal items, such as paper money 22, credit cards 24, driver's license, identification cards, membership cards, business cards, or the like, or any combination thereof may be compressively held in-between plates 12 and 14" Minn 2:21-25.

12	The compact wallet of claim 1, further comprising aligned finger notches through proximal ends of the rigid plates to expose an edge of the card-like contents for the purpose of pushing the edge to elevate the contents into view through distal ends of the rigid plates, said edge providing a fulcrum to lever the proximal ends together for the purpose of fanning the distal ends apart in display of the contents.	Minn has aligned notches. The other part of the claim is an intended use and is not limiting. In addition, it was known that aligned notches can be used in this manner. See e.g. Kane and Beckley. Beckley shows aligned finger notches as well. 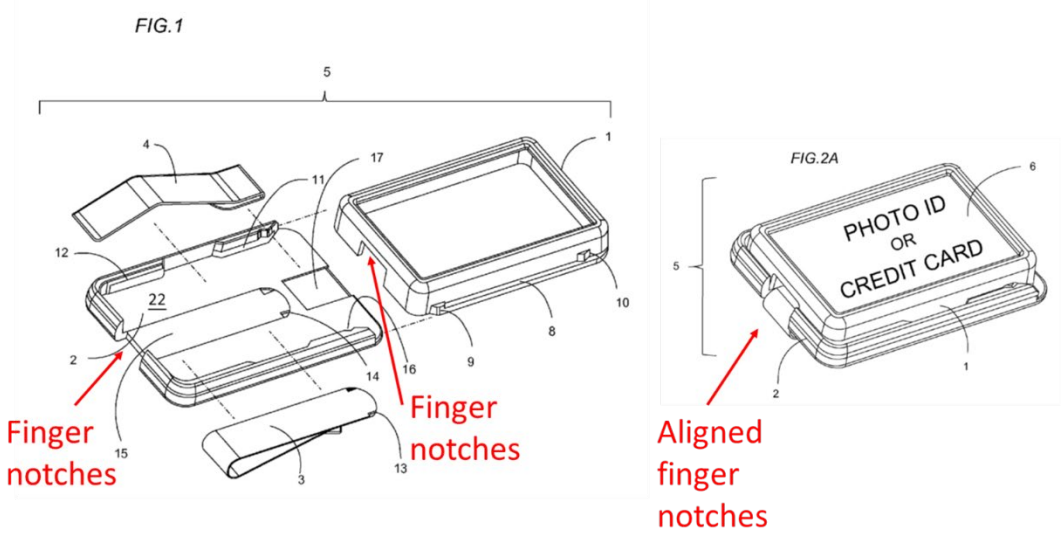

CL. NO.	'808 CLAIM ELEMENT	EXEMPLARY PRIOR ART DISCLOSURE
13	The compact wallet of claim 1, wherein the encircling elastic band is comprised of woven elastic fabric	A POSITA would have known that the elastic band of Minn could be woven elastic fabric and would be an obvious choice. In addition, it would have been obvious to make the band of woven elastic as taught by Preston-Hall. "FIG. 13 is a cross-sectional view of yet another embodiment of the a card and currency carrying device having a pair of spaced, deflectable spring members each having an undeflected position and a deflected position responsive to a compression deflection force applied concurrently thereto, a first pair and a second pair of planar Support members operatively connected on to each side of and enclosing the other of said pair of spaced, deflectable spring members and endless loop of a woven, longitudinally extendable, elastic fabric material having a predetermined length located between each of the inner planar support member and its adjacent deflectable spring forming an operative arrangement there between." Preston-Hall 8:4-16. 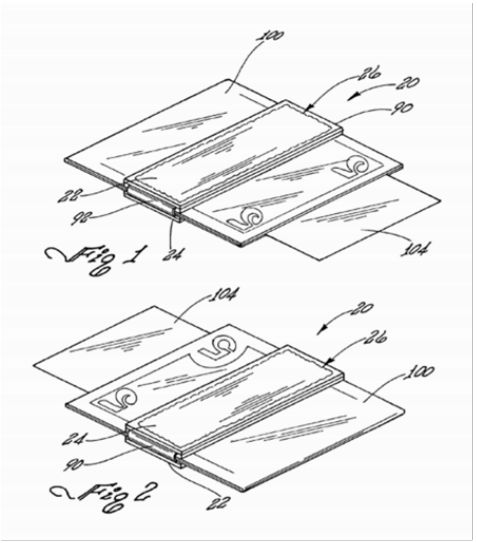 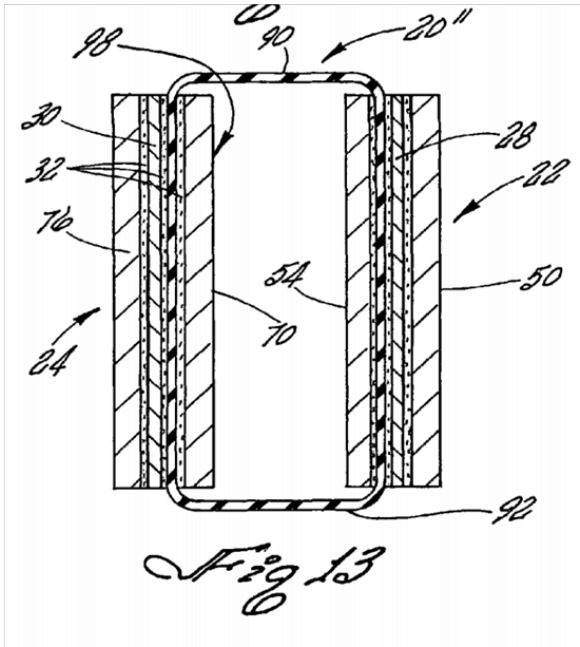

CL. NO.	'808 CLAIM ELEMENT	EXEMPLARY PRIOR ART DISCLOSURE
14pre	A compact wallet, comprising:	Minn, Podwika & Coates are all compact wallets
14a	at least two rigid plates interposed to sandwich cardlike contents there between, each rigid plate having a groove along a longitudinal extent thereof,	Minn discloses two rigid plates with longitudinal extents interposed to sandwich cardlike contents: 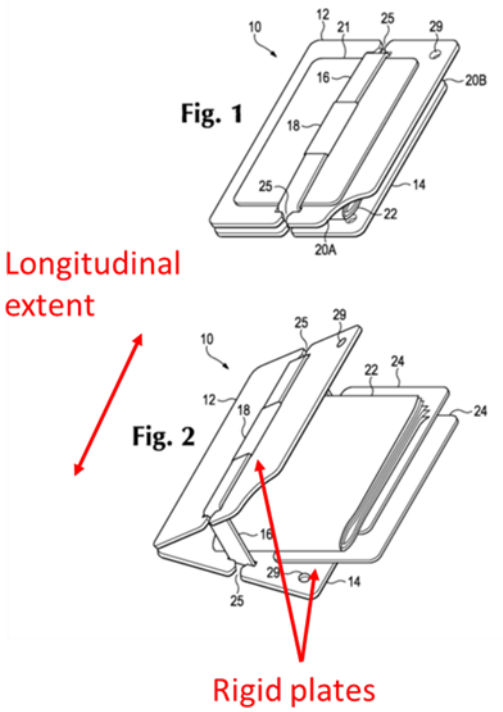 "Referring to FIGS. 1-4, a low profile wallet 10 comprises two metal and/or carbon fiber plates 12 and 14 held together with an elastic strap 16. Personal items, such as paper money 22, credit cards 24, driver's license, identification cards, membership cards, business cards, or the like, or any combination thereof maybe compressively held in-between plates 12 and 14." Minn 2:19-25.

CL. NO.	'808 CLAIM ELEMENT	EXEMPLARY PRIOR ART DISCLOSURE
		Minn modified with the groove of Podwika discloses this limitation. FIG. 1 of Podwika illustrates that the longitudinal elastic band can be captured by a longitudinal groove in each plate instead of by slots 25 and notches 28 taught in Minn. This would be desirable to minimize the profile of the wallet. Like Minn and Podwika, the combination of Minn and Podwika (and Coates) also allows freedom for the dynamic extension and contraction of the band over the entire running length. The groove of Podwika is shown below in FIG. 1 of Podwika. 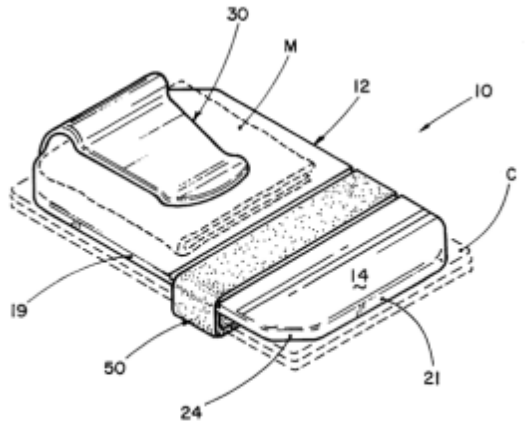 FIG. 1 As explained in Podwika, the recess 26 is sized and configured to receive a portion of an elastic retaining band 50. The elastic retaining band 50 is formed into a continuous loop that encircles the base 12. A POSITA would be motivated to utilize this over the longitudinal extent of the rigid plates of Minn in place of slots 25 and notches 28 of Minn.

CL. NO.	'808 CLAIM ELEMENT	EXEMPLARY PRIOR ART DISCLOSURE
		Furthermore, based on Coates, instead of being exposed, the groove could be made between two lamina to protect the band as seen in Figure 13 where 24a and 24b are the lamina of the rigid plate and 4 is the elastic band: 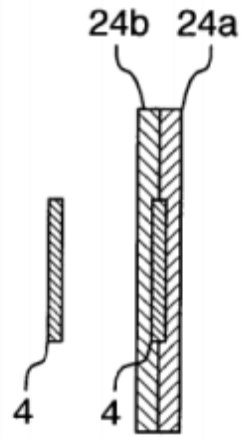 FIG.13 While Coates teaches that the lamina can be attached by adhesive, a POSITA would be motivated to instead attach the laminas by screws to allow replacement of the elastic band or the outer lamina (additionally for changing the visual appearance as described in Minn 2:51-56). As also noted by the Patent Office, "Coates teaches other fasteners, it would have been obvious to one of ordinary skill in the art to provide screws or adhesive attaching the two plates." September 19, 2018 Office Action, '596 Prosecution History.

CL. NO.	'808 CLAIM ELEMENT	EXEMPLARY PRIOR ART DISCLOSURE
14b	at least one encircling elastic band slidingly interposed in the grooves to bias the at least two rigid plates inwardly and securely hold the card-like contents while providing elastic volume there between for adding or removing contents, the grooves configured to hold position of the at least one encircling elastic band with respect to each rigid plate while allowing freedom for the dynamic extension and contraction of the band over the entire running length thereof; and	Minn modified with the groove of Podwika discloses this limitation. FIG. 1 of Podwika illustrates that the elastic band can be captured by a longitudinal groove in each plate instead of by slots 25 and notches 28 taught in Minn. This would be desirable to minimize the profile of the wallet. Like Minn and Podwika, the combination of Minn and Podwika also allow freedom for the dynamic extension and contraction of the band over the entire running length. The groove of Podwika is shown below in FIG. 1 of Podwika. 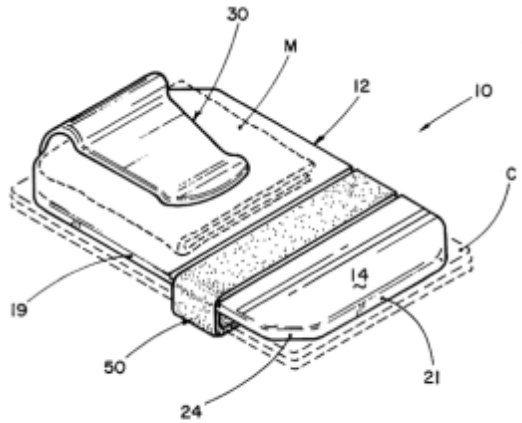 FIG. 1 As explained in Podwika, the recess 26 is sized and configured to receive a portion of an elastic retaining band 50. The elastic retaining band 50 is formed into a continuous loop that encircles the base 12. A POSITA would be motivated to utilize this over the longitudinal extent of the rigid plates of Minn in place of slots 25 and notches 28 of Minn.

CL. NO.	'808 CLAIM ELEMENT	EXEMPLARY PRIOR ART DISCLOSURE
		Furthermore, based on Coates, instead of being exposed, the groove could be made between two lamina to protect the band as seen in Figure 13 where 24a and 24b are the lamina of the rigid plate and 4 is the elastic band: 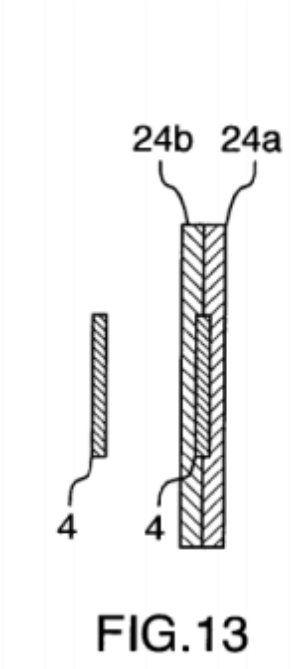 FIG.13 While Coates teaches that the lamina can be attached by adhesive, a POSITA would be motivated to instead attach the laminas by screws to preserve the operation of the band and allow replacement of the elastic band or the outer lamina (additionally for changing the visual appearance as described in Minn 2:51-56).

CL. NO.	'808 CLAIM ELEMENT	EXEMPLARY PRIOR ART DISCLOSURE
14c	a recess formed inside at least one of the at least two rigid plates, the recess operable to receive a tang of an auxiliary feature, the recess having an undercut operable to engage a hook of the tang to prevent inadvertent dislodgement of the auxiliary feature from the recess when the auxiliary feature is removably positioned in at least one of the at least two rigid plates, the hook extending at an angle to the tang,	The clip of Beckley or Murphy discloses this element and it would be obvious to use either the clip of Beckley or Murphy in the modified wallet of Minn. It was well known in the art to use a removable clip in conjunction with a compact wallet. For example, Beckley teaches a removable clip 3 that is used with a compact wallet as shown in Figure 1 and 6B of Beckley below. 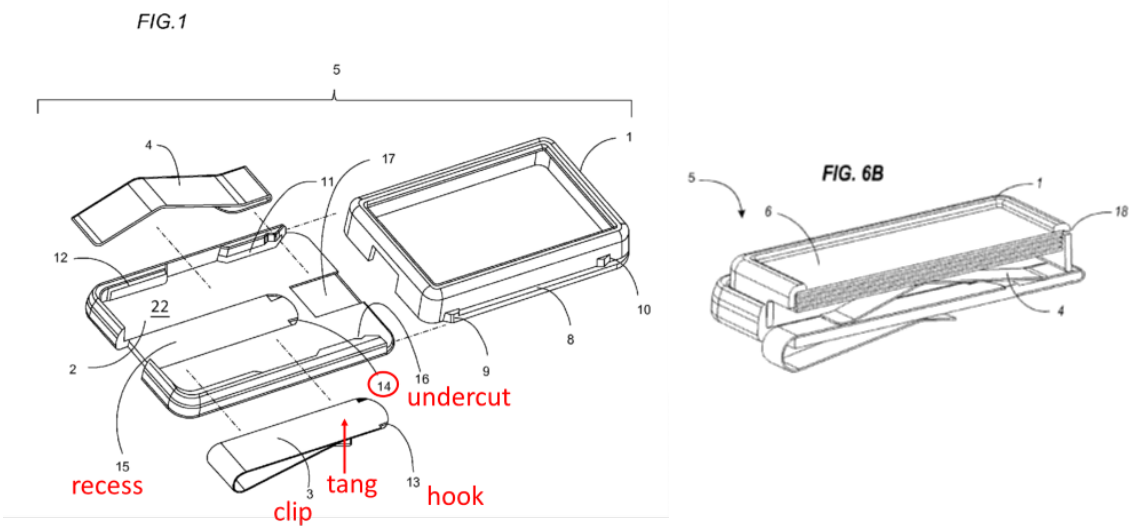 "The clip 3 is assembled to the base 2 by inserting the clip 3 into a depression 15. It is held in place by a pair of barbs seen at 13 mated into a set of cavities 14 on the base 2." Beckley, 4:30-40. Depression 15 is the recess. The hook 13 that extends at an angle to the tang engages the undercut (14 or wall of 14) to hold the clip in place and prevent inadvertent dislodgement of the clip 3 (auxiliary feature) from the recess. A POSITA knew of the desirability of removable clips on a compact wallet and would be motivated to incorporate the removable clip of Beckley into the compact wallet (and this would be an additional reason to use screws rather than glue or welding to attach the lamina together in addition to being able to replace the outer lamina and or band) and could easily do so. The recess would be between the lamina of the rigid plate of the modified wallet of Minn and the undercut would be in one of the lamina.

		Another example of a removable clip that uses a tang with a hook at an angle to engage an undercut of a recess is shown in Figure 5 of Murphy. The tang is inserted into the recess 9 and the clip is prevented from inadvertently being removed by the hook that engages the undercut of the recess. 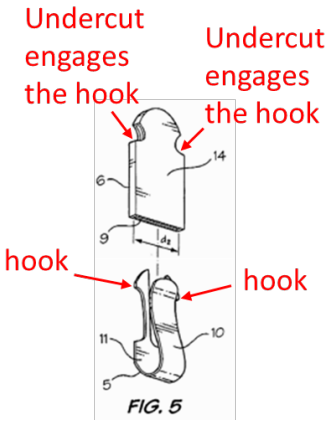 While the clip of Murphy is shown as clipping to the cuff of a pant leg (that can have variable thickness), the clip 10 is similar to that used for a money clip or a clip that could attach a wallet to a belt for example. A POSITA would also be motivated to use the tang and hook arrangement to secure a removable clip or accessory to the wallet (the combination described above). In addition, the abstract describes the invention as "[a] device purposed to adjust the size or shape of a garment or other item, or to be worn itself as an accessory." Abstract, Murphy. A POSITA would be motivated to incorporate a removable clip such as that of Murphy into the compact wallet (and this would be an additional reason to use screws rather than glue or welding to attach the lamina together in addition to being able to replace the outer lamina and or band). The recess would be between the two lamina and the undercut would be placed in one of the lamina.

		In the wallet of Minn that has the groove of Podwika in the laminate structure of Coates, a POSITA wanting to add a removable clip could incorporate any of the clips or their combinations as discussed above.

CL. NO.	'808 CLAIM ELEMENT	EXEMPLARY PRIOR ART DISCLOSURE

14d	whereby, card-like contents may be carried with minimal silhouette on or with a person while allowing expandable capacity and ready access to individual contents from between the at least two rigid plates.	The combination discussed results in this limitation. The groove of Podwika minimized the silhouette and does not adversely affect the already present expandable capacity and ready access of Minn. "It is another object of the invention to provide a holder for cards and paper money which is compact when filled with varying amounts of cards and money. It is a further object of the invention to provide a holder for cards which can retain a plurality of cards equally as well as it can retain a single card." Podwika 2:27-33
15	The compact wallet of claim 14, wherein the groove is in a first lamina of a laminate construction of each rigid plate, the groove slidingly receiving one part of the at least one encircling elastic band	As discussed, the combination that utilizes the groove of Pokwika with the laminate construction of Coates (attached with screws rather than adhesive) contains this element. The elastic band is shown in FIG. 13 and FIG. 4 as 4 and the lamina are 24a and 24b.

CL. NO.	'808 CLAIM ELEMENT	EXEMPLARY PRIOR ART DISCLOSURE
		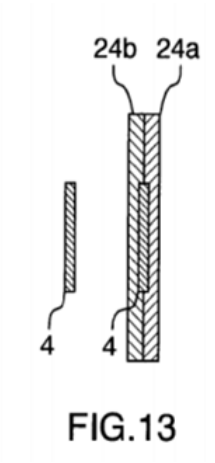 FIG.13 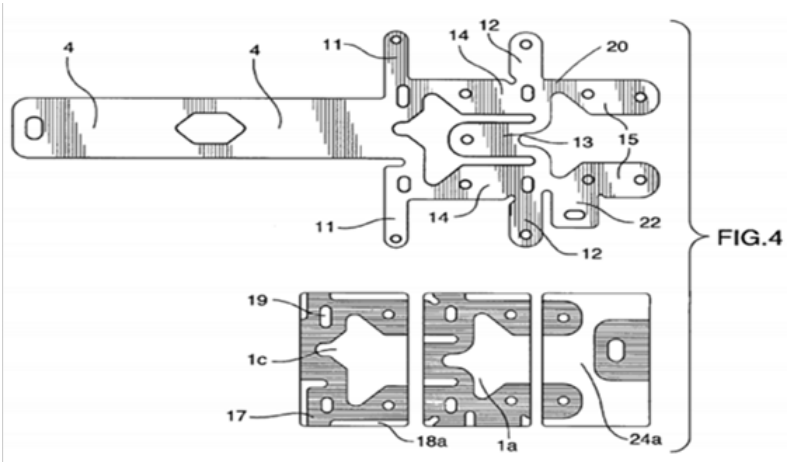 FIG.4 As also noted by the Patent Office, "Coates teaches other fasteners, it would have been obvious to one of ordinary skill in the art to provide screws or adhesive attaching the two plates." September 19, 2018 Office Action, '596 Prosecution History.

CL. NO.	'808 CLAIM ELEMENT	EXEMPLARY PRIOR ART DISCLOSURE
16	The compact wallet of claim 15, wherein a second lamina of the laminate construction of each rigid plate is removably attached to the first lamina to capture the at least one elastic band and provide a smooth surface for glide.	As discussed, a POSITA would use screws in the combination discussed to attach the lamina in order to allow replacement of the elastic band or outer lamina (for example for damage or simply for changing the appearance). The second lamina holds the band in place and provides a smooth glide surface. This can be see n in Figure 13 and 7 of Coates. 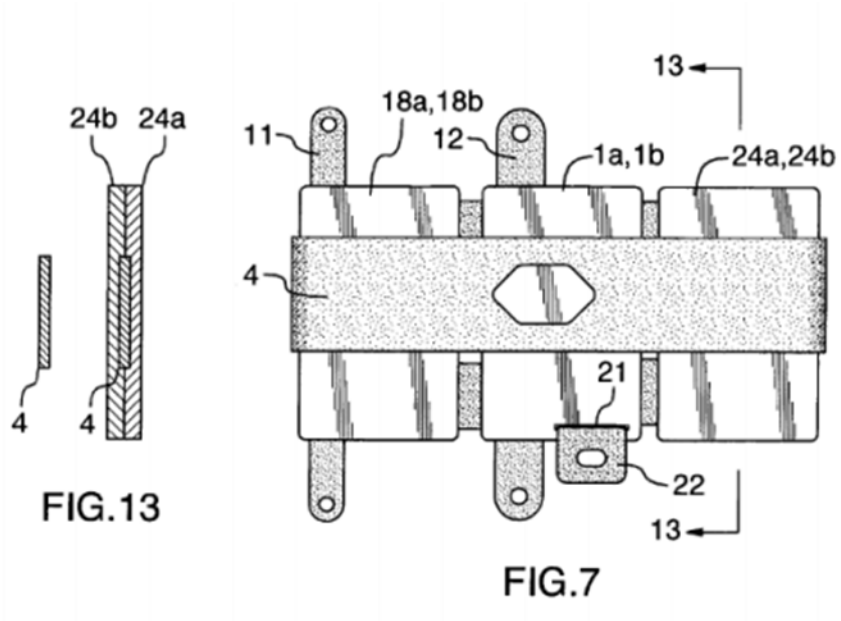 Coates FIG. 13 and FIG. 7

CL. NO.	'808 CLAIM ELEMENT	EXEMPLARY PRIOR ART DISCLOSURE
17	The compact wallet of claim 16, wherein the second lamina is attached to the first lamina by screws	As discussed, a POSITA would use screws in the combination discussed to attach the lamina in order to allow replacement of the elastic band or outer lamina (for example for damage or simply for changing the appearance). As also noted by the Patent Office, "Coates teaches other fasteners, it would have been obvious to one of ordinary skill in the art to provide screws or adhesive attaching the two plates." September 19, 2018 Office Action, '596 Prosecution History.
18	The compact wallet of claim 1, wherein each rigid plate is comprised of metal for RFID protection	This limitation is disclosed in Minn and in the modification of Minn discussed. "Referring to FIGS. 1-4 a low profile wallet 10 comprises two metal and/or carbon fiber plates 12." Minn, 2:19-20. "Wallet 10 may use a metal material for plates 12 and 14, such as aluminum or steel. The metal material may block RFID signals and prevent unauthorized access to the information contained on credit cards 24. In one example, wallet 10 may use an aircraft grade aluminum 6061 with an anodized or powder coat paint finish for plates 12 and 14." Minn, 4:46-51. Minn also discusses the benefit of using metal plates for RFID blocking: "Known metal wallets can retain personal items such as credit cards and money within a relatively low profile and provide RFID blocking." Minn 1: 26-30.
19 pre	A method of making a modular compact wallet, comprising the steps:	See Claim 1 pre, 14 pre

19a	providing at least two rigid plates interposed to sandwich card-like contents there between, each rigid plate having a groove along a longitudinal extent thereof;	See Claim 14a
19b	at least one encircling elastic band slidingly interposed in the grooves to bias the at least two rigid plates inwardly and securely hold the card-like contents while providing elastic volume there between for adding or removing contents, the grooves configured to hold position of the at least one encircling elastic band with respect to each rigid plate while allowing freedom for the dynamic extension and contraction of the band over the entire running length thereof,	See Claim 14b
19c	at least one groove additionally having at least one recess positioned outbound of the elastic band;	While the term outbound is not used in the specification, to the extent outbound means outside of the elastic band, this limitation is present in the obviousness combination discussed with the clip of Murphy incorporated. The recess to receive the hook of the tang of Murphy is positioned outbound of the elastic band as the width of the tang minus the hook of Murphy matches the width of the groove (which prevents side to side motion of the clip). This limitation is obvious over the discussed combination with the clip of Beckley as it would be obvious to position the barbs of Beckley outbound of the elastic band to reduce the depth of the groove and improve the structural rigidity of the plate.
19d	providing a first auxiliary feature having at least one tang;	See Claim 14c, 1d

19e	inserting, removably, the at least one tang of the first auxiliary feature into the at least one recess to make the first auxiliary feature available at an outside face of at least one of the two rigid plates;	See claim 1d, Claim 14c. In the combinations discussed (with either Beckley, Roman or Murphy) the clip is available at an outside face of one of the rigid plates. 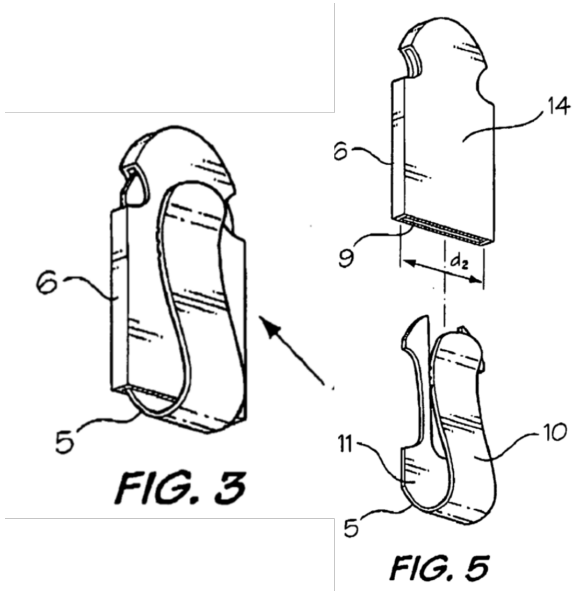 FIG. 3 and FIG. 5 of Murphy showing the clip on the outside face 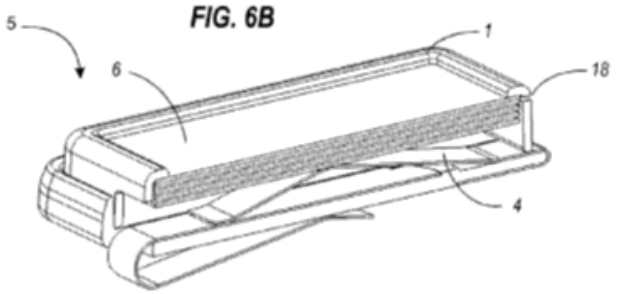 FIG. 6b of Beckley showing the clip in cross section on the outside face.

19f	removing, selectively, the first auxiliary feature;	See Claim 1d, 14c
19g	providing, selectively, at least a second auxiliary feature having at least one tang; and inserting, removably, the at least one tang of the second auxiliary feature into the at least one recess to make the second auxiliary feature available at an outside face of at least one of the two rigid plates, the at least one recess having an undercut operable to engage a hook of the tang to prevent inadvertent dislodgement of the second auxiliary feature from the at least one recess, the hook extending at an angle to the tang, the at least one recess receiving the tang being disposed inside at least one of the two rigid plates;	See Claim 1d, 14c. For each of the combinations discussed, it would be obvious to include a second accessory arranged the same way as the first but on the opposite rigid plate.
19h	whereby, card-like contents may be carried with minimal silhouette on or with a person while allowing expandable capacity and ready access to individual contents positioned interiorly to the at least two rigid plates and proving additional functionality from at least one auxiliary feature positioned exteriorly thereto.	See Claim 1e, 14d

CL. NO.	'808 CLAIM ELEMENT	EXEMPLARY PRIOR ART DISCLOSURE
20	The method of claim 19, wherein the at least one recess has an undercut and the at least one tang has a hook, the hook and undercut interpositioned to secure the at least one auxiliary feature against inadvertent dislodgement.	See Claim 1d, 14c. In each combination the hook and undercut are interpositioned to secure the tang.
21	The method of claim 20, wherein at least one of the auxiliary features is a money clip.	In each of the combinations, it was obvious to implement the auxiliary feature as a money clip. For Beckley, the clip is already a money clip and as discussed, it would have been obvious to a POSITA to implement the clip of Murphy onto the modified wallet of Minn as a money clip because a money clip was a desirable often implemented feature of a compact wallet.
22	The method of claim 19, wherein the groove is in a first lamina of a laminate construction of each rigid plate and the at least one recess is in at least one of the first lamina.	This limitation is present in each of the combinations discussed. See Claim 1d, 14c, 15 where the groove of Claim 22 is the recess of Claim 1d/14c/15 and the recess of Claim 22 is the undercut of Claim 1d/14c/15. As a reminder the laminate structure from Coates has been incorporated into the wallet of Minn modified by Podwika with an undercut as taught in Murphy/ Beckley. 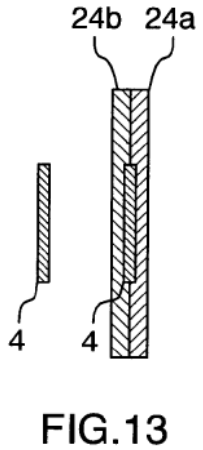 FIG. 13 of Coates

23	The method of claim 22, wherein a second lamina of the laminate construction of each rigid plate captures the at least one elastic band and the at least one tang when removably attached to the first lamina and facilitates placement and removal of the at least one elastic band and the at least one tang when removed from the first lamina.	As discussed, for all the combinations, a second lamina captures the band as shown in Figure 13 of Coates. 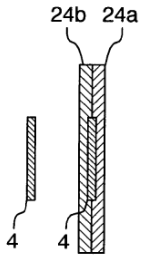 FIG.13 FIG. 13 of Coates The tang is placed similar to shown in Figure 1 and 6B of Beckley but as discussed in connection with the modified wallet of Minn for Claim 19: 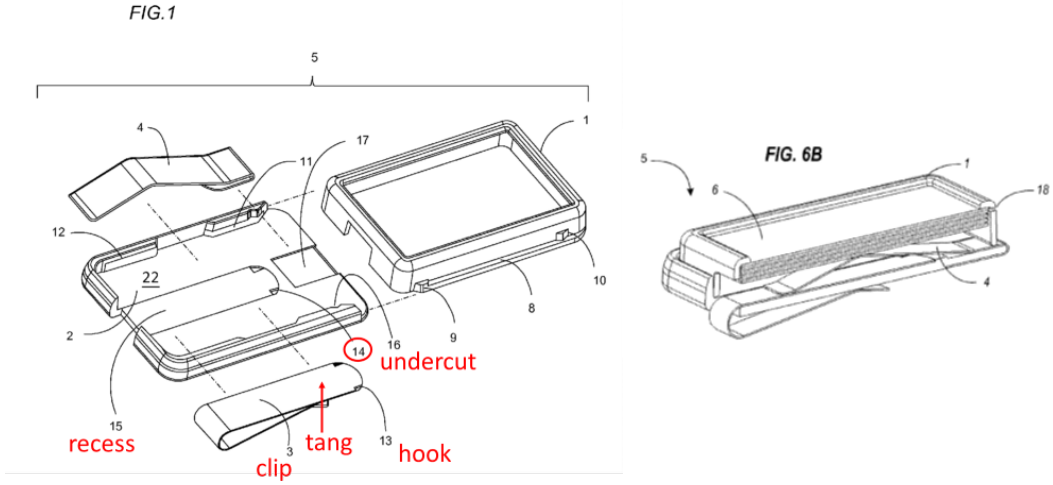 The band is lined up and placed on top of the tang in the groove and then the second lamina is attached.

24	The method of claim 23, wherein the second lamina is attached to the first lamina by screws.	See Claim 4, 17, 1c