ABSTRACT OF THE INVENTION

The present invention is a compact wallet designed to present a minimal silhouette in a shirt, pants or purse pocket. Novel features hold the silhouette to the minimal dimensions of a credit card while affording maximal expandability for content storage and accessibility.

SHENZHEN PINCAN Exhibit 1017
SHENZHEN PINCAN v. Ridge Wallet
IPR2024-00340

SHENZHEN PINCAN Exhibit 1017 Page 1

Under the Paperwork Reduction Act of 1995, no persons are required to respond to a collection of information unless it contains a valid OMB control number.

Application Data Sheet 37 CFR 1.76	Attorney Docket Number	15050 XP
	Application Number	
Title of Invention	COMPACT WALLET	

The application data sheet is part of the provisional or nonprovisional application for which it is being submitted. The following form contains the bibliographic data arranged in a format specified by the United States Patent and Trademark Office as outlined in 37 CFR 1.76.
This document may be completed electronically and submitted to the Office in electronic format using the Electronic Filing System (EFS) or the document may be printed and included in a paper filed application.

Secrecy Order 37 CFR 5.2

☐ Portions or all of the application associated with this Application Data Sheet may fall under a Secrecy Order pursuant to 37 CFR 5.2 (Paper filers only. Applications that fall under Secrecy Order may not be filed electronically.)

Inventor Information:

Inventor 1 Remove

Legal Name

Prefix	Given Name	Middle Name	Family Name	Suffix
	Daniel		Kane	

Residence Information (Select One) ◉ US Residency ◯ Non US Residency ◯ Active US Military Service

City	Agoura Hills	State/Province	CA	Country of Residence i	US

Mailing Address of Inventor:

Address 1	30426 Rainbow View Drive		
Address 2			
City	Agoura Hills	**State/Province**	CA
Postal Code	91301	**Country** i	US

All Inventors Must Be Listed - Additional Inventor Information blocks may be generated within this form by selecting the **Add** button. Add

Correspondence Information:

Enter either Customer Number or complete the Correspondence Information section below.
For further information see 37 CFR 1.33(a).

☐ **An Address is being provided for the correspondence Information of this application.**

Customer Number	25957		
Email Address	agent@xpertpatents.com	Add Email	Remove Email

Application Information:

Title of the Invention	COMPACT WALLET		
Attorney Docket Number	15050 XP	**Small Entity Status Claimed**	☒
Application Type	Nonprovisional		
Subject Matter	Utility		
Total Number of Drawing Sheets (if any)	5	**Suggested Figure for Publication (if any)**	1

Filing By Reference :

Under the Paperwork Reduction Act of 1995, no persons are required to respond to a collection of information unless it contains a valid OMB control number.

Application Data Sheet 37 CFR 1.76	Attorney Docket Number	15050 XP
	Application Number	
Title of Invention	COMPACT WALLET	

Only complete this section when filing an application by reference under 35 U.S.C. 111(c) and 37 CFR 1.57(a). Do not complete this section if application papers including a specification and any drawings are being filed. Any domestic benefit or foreign priority information must be provided in the appropriate section(s) below (i.e., "Domestic Benefit/National Stage Information" and "Foreign Priority Information").

For the purposes of a filing date under 37 CFR 1.53(b), the description and any drawings of the present application are replaced by this reference to the previously filed application, subject to conditions and requirements of 37 CFR 1.57(a).

Application number of the previously filed application	Filing date (YYYY-MM-DD)	Intellectual Property Authority or Country

Publication Information:

☐ Request Early Publication (Fee required at time of Request 37 CFR 1.219)

☐ **Request Not to Publish.** I hereby request that the attached application not be published under 35 U.S.C. 122(b) and certify that the invention disclosed in the attached application **has not and will not** be the subject of an application filed in another country, or under a multilateral international agreement, that requires publication at eighteen months after filing.

Representative Information:

Representative information should be provided for all practitioners having a power of attorney in the application. Providing this information in the Application Data Sheet does not constitute a power of attorney in the application (see 37 CFR 1.32).
Either enter Customer Number or complete the Representative Name section below. If both sections are completed the customer Number will be used for the Representative Information during processing.

Please Select One:	◉ Customer Number	○ US Patent Practitioner	○ Limited Recognition (37 CFR 11.9)
Customer Number	25957		

Domestic Benefit/National Stage Information:

This section allows for the applicant to either claim benefit under 35 U.S.C. 119(e), 120, 121, or 365(c) or indicate National Stage entry from a PCT application. Providing this information in the application data sheet constitutes the specific reference required by 35 U.S.C. 119(e) or 120, and 37 CFR 1.78.
When referring to the current application, please leave the application number blank.

Prior Application Status			Remove
Application Number	Continuity Type	Prior Application Number	Filing Date (YYYY-MM-DD)

Additional Domestic Benefit/National Stage Data may be generated within this form by selecting the **Add** button. Add

Foreign Priority Information:

Under the Paperwork Reduction Act of 1995, no persons are required to respond to a collection of information unless it contains a valid OMB control number.

Application Data Sheet 37 CFR 1.76	Attorney Docket Number	15050 XP
	Application Number	
Title of Invention	COMPACT WALLET	

This section allows for the applicant to claim priority to a foreign application. Providing this information in the application data sheet constitutes the claim for priority as required by 35 U.S.C. 119(b) and 37 CFR 1.55(d). When priority is claimed to a foreign application that is eligible for retrieval under the priority document exchange program (PDX) [i] the information will be used by the Office to automatically attempt retrieval pursuant to 37 CFR 1.55(h)(1) and (2). Under the PDX program, applicant bears the ultimate responsibility for ensuring that a copy of the foreign application is received by the Office from the participating foreign intellectual property office, or a certified copy of the foreign priority application is filed, within the time period specified in 37 CFR 1.55(g)(1).

Remove

Application Number	Country [i]	Filing Date (YYYY-MM-DD)	Access Code [i] (if applicable)

Additional Foreign Priority Data may be generated within this form by selecting the **Add** button. Add

Statement under 37 CFR 1.55 or 1.78 for AIA (First Inventor to File) Transition Applications

☐ This application (1) claims priority to or the benefit of an application filed before March 16, 2013 and (2) also contains, or contained at any time, a claim to a claimed invention that has an effective filing date on or after March 16, 2013.
NOTE: By providing this statement under 37 CFR 1.55 or 1.78, this application, with a filing date on or after March 16, 2013, will be examined under the first inventor to file provisions of the AIA.

Authorization to Permit Access:

☐ Authorization to Permit Access to the Instant Application by the Participating Offices

Under the Paperwork Reduction Act of 1995, no persons are required to respond to a collection of information unless it contains a valid OMB control number.

Application Data Sheet 37 CFR 1.76	Attorney Docket Number	15050 XP
	Application Number	
Title of Invention	COMPACT WALLET	

If checked, the undersigned hereby grants the USPTO authority to provide the European Patent Office (EPO), the Japan Patent Office (JPO), the Korean Intellectual Property Office (KIPO), the World Intellectual Property Office (WIPO), and any other intellectual property offices in which a foreign application claiming priority to the instant patent application is filed access to the instant patent application. See 37 CFR 1.14(c) and (h). This box should not be checked if the applicant does not wish the EPO, JPO, KIPO, WIPO, or other intellectual property office in which a foreign application claiming priority to the instant patent application is filed to have access to the instant patent application.

In accordance with 37 CFR 1.14(h)(3), access will be provided to a copy of the instant patent application with respect to: 1) the instant patent application-as-filed; 2) any foreign application to which the instant patent application claims priority under 35 U.S.C. 119(a)-(d) if a copy of the foreign application that satisfies the certified copy requirement of 37 CFR 1.55 has been filed in the instant patent application; and 3) any U.S. application-as-filed from which benefit is sought in the instant patent application.

In accordance with 37 CFR 1.14(c), access may be provided to information concerning the date of filing this Authorization.

Applicant Information:

Providing assignment information in this section does not substitute for compliance with any requirement of part 3 of Title 37 of CFR to have an assignment recorded by the Office.

Applicant 1 Remove

If the applicant is the inventor (or the remaining joint inventor or inventors under 37 CFR 1.45), this section should not be completed. The information to be provided in this section is the name and address of the legal representative who is the applicant under 37 CFR 1.43; or the name and address of the assignee, person to whom the inventor is under an obligation to assign the invention, or person who otherwise shows sufficient proprietary interest in the matter who is the applicant under 37 CFR 1.46. If the applicant is an applicant under 37 CFR 1.46 (assignee, person to whom the inventor is obligated to assign, or person who otherwise shows sufficient proprietary interest) together with one or more joint inventors, then the joint inventor or inventors who are also the applicant should be identified in this section.

Clear

◯ Assignee	◯ Legal Representative under 35 U.S.C. 117	◯ Joint Inventor
◯ Person to whom the inventor is obligated to assign.	◯ Person who shows sufficient proprietary interest	

If applicant is the legal representative, indicate the authority to file the patent application, the inventor is:

Name of the Deceased or Legally Incapacitated Inventor :

If the Applicant is an Organization check here. ☐

Prefix	**Given Name**	Middle Name	**Family Name**	Suffix

Under the Paperwork Reduction Act of 1995, no persons are required to respond to a collection of information unless it contains a valid OMB control number.

Application Data Sheet 37 CFR 1.76	Attorney Docket Number	15050 XP
	Application Number	
Title of Invention	COMPACT WALLET	

Mailing Address Information:			
Address 1			
Address 2			
City		**State/Province**	
Country i		Postal Code	
Phone Number		Fax Number	
Email Address			

Additional Applicant Data may be generated within this form by selecting the Add button. Add

Assignee Information including Non-Applicant Assignee Information:

Providing assignment information in this section does not subsitute for compliance with any requirement of part 3 of Title 37 of CFR to have an assignment recorded by the Office.

Assignee 1

Complete this section if assignee information, including non-applicant assignee information, is desired to be included on the patent application publication . An assignee-applicant identified in the "Applicant Information" section will appear on the patent application publication as an applicant. For an assignee-applicant, complete this section only if identification as an assignee is also desired on the patent application publication.

Remove

If the Assignee or Non-Applicant Assignee is an Organization check here. ☐

Prefix	**Given Name**	Middle Name	**Family Name**	Suffix

Mailing Address Information For Assignee including Non-Applicant Assignee:			
Address 1			
Address 2			
City		**State/Province**	
Country i		Postal Code	
Phone Number		Fax Number	
Email Address			

Additional Assignee or Non-Applicant Assignee Data may be generated within this form by selecting the Add button. Add

Under the Paperwork Reduction Act of 1995, no persons are required to respond to a collection of information unless it contains a valid OMB control number.

Application Data Sheet 37 CFR 1.76	Attorney Docket Number	15050 XP
	Application Number	
Title of Invention	COMPACT WALLET	

Signature:

Remove

NOTE: This form must be signed in accordance with 37 CFR 1.33. See 37 CFR 1.4 for signature requirements and certifications					
Signature	/Lawrence Lambelet/			Date (YYYY-MM-DD)	2015-05-06
First Name	Lawrence	Last Name	Lambelet	Registration Number	38530
Additional Signature may be generated within this form by selecting the Add button.					Add

This collection of information is required by 37 CFR 1.76. The information is required to obtain or retain a benefit by the public which is to file (and by the USPTO to process) an application. Confidentiality is governed by 35 U.S.C. 122 and 37 CFR 1.14. This collection is estimated to take 23 minutes to complete, including gathering, preparing, and submitting the completed application data sheet form to the USPTO. Time will vary depending upon the individual case. Any comments on the amount of time you require to complete this form and/or suggestions for reducing this burden, should be sent to the Chief Information Officer, U.S. Patent and Trademark Office, U.S. Department of Commerce, P.O. Box 1450, Alexandria, VA 22313-1450. DO NOT SEND FEES OR COMPLETED FORMS TO THIS ADDRESS. **SEND TO: Commissioner for Patents, P.O. Box 1450, Alexandria, VA 22313-1450.**

Privacy Act Statement

The Privacy Act of 1974 (P.L. 93-579) requires that you be given certain information in connection with your submission of the attached form related to a patent application or patent. Accordingly, pursuant to the requirements of the Act, please be advised that: (1) the general authority for the collection of this information is 35 U.S.C. 2(b)(2); (2) furnishing of the information solicited is voluntary; and (3) the principal purpose for which the information is used by the U.S. Patent and Trademark Office is to process and/or examine your submission related to a patent application or patent. If you do not furnish the requested information, the U.S. Patent and Trademark Office may not be able to process and/or examine your submission, which may result in termination of proceedings or abandonment of the application or expiration of the patent.

The information provided by you in this form will be subject to the following routine uses:

1. The information on this form will be treated confidentially to the extent allowed under the Freedom of Information Act (5 U.S.C. 552) and the Privacy Act (5 U.S.C. 552a). Records from this system of records may be disclosed to the Department of Justice to determine whether the Freedom of Information Act requires disclosure of these records.

2. A record from this system of records may be disclosed, as a routine use, in the course of presenting evidence to a court, magistrate, or administrative tribunal, including disclosures to opposing counsel in the course of settlement negotiations.

3. A record in this system of records may be disclosed, as a routine use, to a Member of Congress submitting a request involving an individual, to whom the record pertains, when the individual has requested assistance from the Member with respect to the subject matter of the record.

4. A record in this system of records may be disclosed, as a routine use, to a contractor of the Agency having need for the information in order to perform a contract. Recipients of information shall be required to comply with the requirements of the Privacy Act of 1974, as amended, pursuant to 5 U.S.C. 552a(m).

5. A record related to an International Application filed under the Patent Cooperation Treaty in this system of records may be disclosed, as a routine use, to the International Bureau of the World Intellectual Property Organization, pursuant to the Patent Cooperation Treaty.

6. A record in this system of records may be disclosed, as a routine use, to another federal agency for purposes of National Security review (35 U.S.C. 181) and for review pursuant to the Atomic Energy Act (42 U.S.C. 218(c)).

7. A record from this system of records may be disclosed, as a routine use, to the Administrator, General Services, or his/her designee, during an inspection of records conducted by GSA as part of that agency's responsibility to recommend improvements in records management practices and programs, under authority of 44 U.S.C. 2904 and 2906. Such disclosure shall be made in accordance with the GSA regulations governing inspection of records for this purpose, and any other relevant (i.e., GSA or Commerce) directive. Such disclosure shall not be used to make determinations about individuals.

8. A record from this system of records may be disclosed, as a routine use, to the public after either publication of the application pursuant to 35 U.S.C. 122(b) or issuance of a patent pursuant to 35 U.S.C. 151. Further, a record may be disclosed, subject to the limitations of 37 CFR 1.14, as a routine use, to the public if the record was filed in an application which became abandoned or in which the proceedings were terminated and which application is referenced by either a published application, an application open to public inspections or an issued patent.

9. A record from this system of records may be disclosed, as a routine use, to a Federal, State, or local law enforcement agency, if the USPTO becomes aware of a violation or potential violation of law or regulation.

CLAIMS

What is claimed is:

1. A compact wallet, comprising:

at least two rigid plates interposed to sandwich card-like contents there between, each rigid plate having a longitudinal extent;

at least one encircling elastic band interposed with the at least two rigid plates along longitudinal extents thereof to bias them inwardly and securely hold the card-like contents while providing elastic volume there between for adding or removing contents; and

a channeling means configured to minimize the profile of the wallet and hold position of the at least one encircling elastic band with respect to each rigid plate while allowing freedom for the dynamic extension and contraction of the band over the entire running length thereof;

whereby, card-like contents may be carried with minimal silhouette on or with a person while allowing expandable capacity and ready access to individual contents from between the at least two rigid plates.

2. The compact wallet of claim 1, wherein the channeling means is a longitudinal groove in a first lamina of a laminate construction of each rigid plate, the groove slidingly receiving one part of the at least one encircling elastic band.

SHENZHEN PINCAN Exhibit 1017 Page 9

3. The compact wallet of claim 2, wherein a second lamina of the laminate construction of each rigid plate is removably attached to the first lamina to hold the at least one elastic band in capture and provide a smooth surface for glide purposes.

4. The compact wallet of claim 3, wherein the second lamina is attached to the first lamina by screws.

5. The compact wallet of claim 3, wherein the second lamina is attached to the first lamina by pressure sensitive adhesive means.

6. The compact wallet of claim 1, wherein each rigid plate is comprised of metal for RFID protection.

7. The compact wallet of claim 1, wherein each rigid plate is metalized for RFID protection.

8. The compact wallet of claim 3, wherein at least one of the first or second lamina of each rigid plate is comprised of metal.

9. The compact wallet of claim 1, further comprising a first elastic strap positioned over the ends of the at least two rigid plates transverse to the longitudinal extents, the positioning functioning to retain the card-like contents from that end.

SHENZHEN PINCAN Exhibit 1017 Page 10

10. The compact wallet of claim 1, further comprising a second elastic strap positioned over an outside surface of one of the at least two rigid plates to hold additional contents on the outside surface.

11. The compact wallet of claim 1, wherein the card-like contents comprise one or more of a credit card, a driver's license, an ID card, a business card, an affiliation card, a currency bill, a loyalty card, a coupon, a receipt or a personal paper.

12. The compact wallet of claim 1, further comprising aligned finger notches through proximal ends of the rigid plates to expose an edge of the card-like contents for the purpose of pushing the edge to elevate the contents into view through distal ends of the rigid plates, said edge providing a fulcrum to lever the proximal ends together for the purpose of fanning the distal ends apart in display of the contents.

13. The compact wallet of claim 1, wherein the encircling elastic band is comprised of woven elastic fabric.

14. A compact wallet, comprising:

at least two rigid plates interposed to sandwich card-like contents there between, each rigid plate having a groove along a longitudinal extent thereof;

at least one encircling elastic band slidingly interposed in the grooves to bias the at least two rigid plates inwardly and securely hold the card-like contents while providing elastic volume there between for adding or removing contents, the grooves configured to

SHENZHEN PINCAN Exhibit 1017 Page 11

hold position of the at least one encircling elastic band with respect to each rigid plate while allowing freedom for the dynamic extension and contraction of the band over the entire running length thereof;

whereby, card-like contents may be carried with minimal silhouette on or with a person while allowing expandable capacity and ready access to individual contents from between the at least two rigid plates.

15. The compact wallet of claim 14, wherein the groove is in a first lamina of a laminate construction of each rigid plate, the groove slidingly receiving one part of the at least one encircling elastic band.

16. The compact wallet of claim 15, wherein a second lamina of the laminate construction of each rigid plate is removably attached to the first lamina to capture the at least one elastic band and provide a smooth surface for glide.

17. The compact wallet of claim 16, wherein the second lamina is attached to the first lamina by screws.

18. The compact wallet of claim 1, wherein each rigid plate is comprised of metal for RFID protection.

SHENZHEN PINCAN Exhibit 1017 Page 12

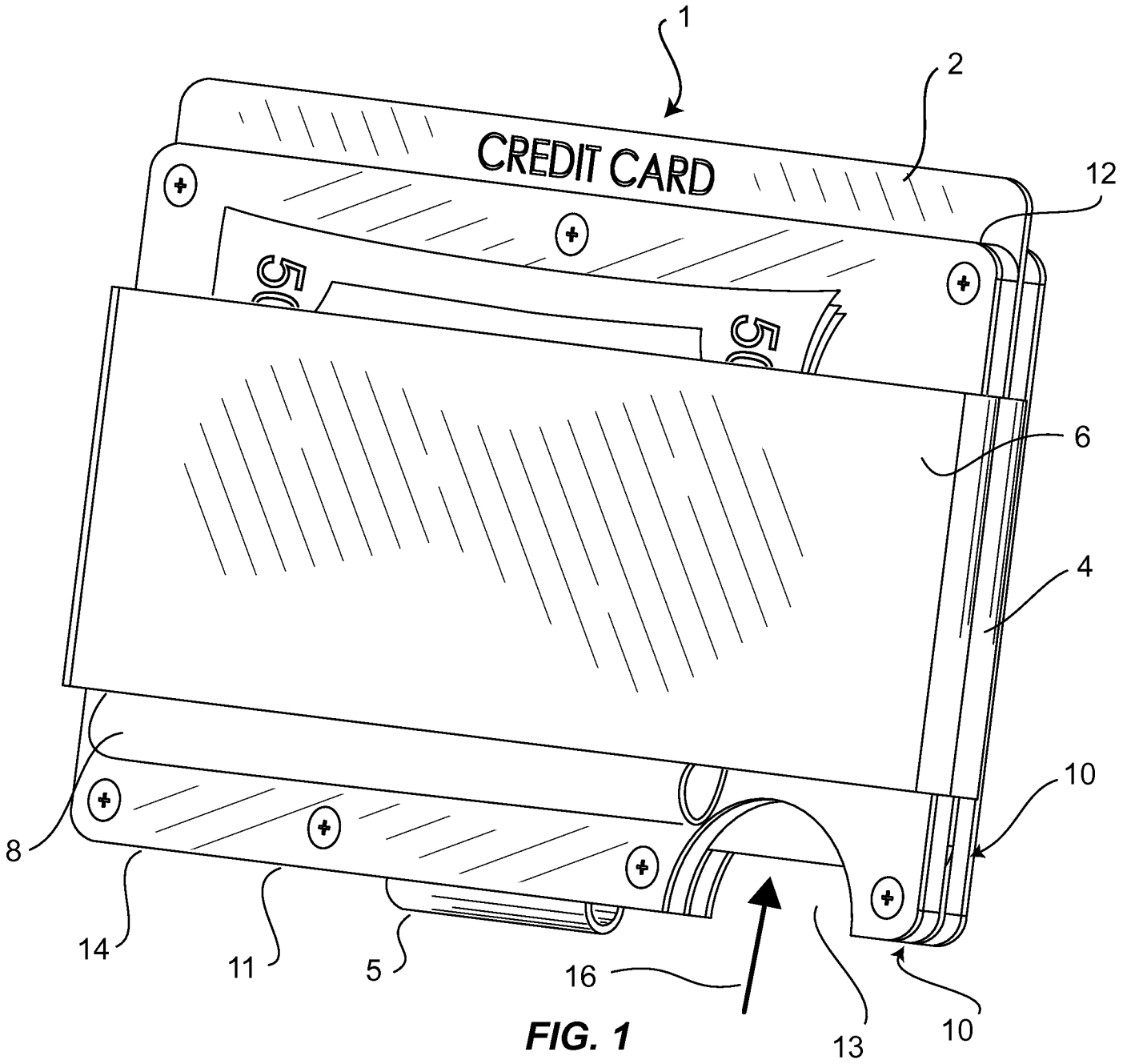

FIG. 1

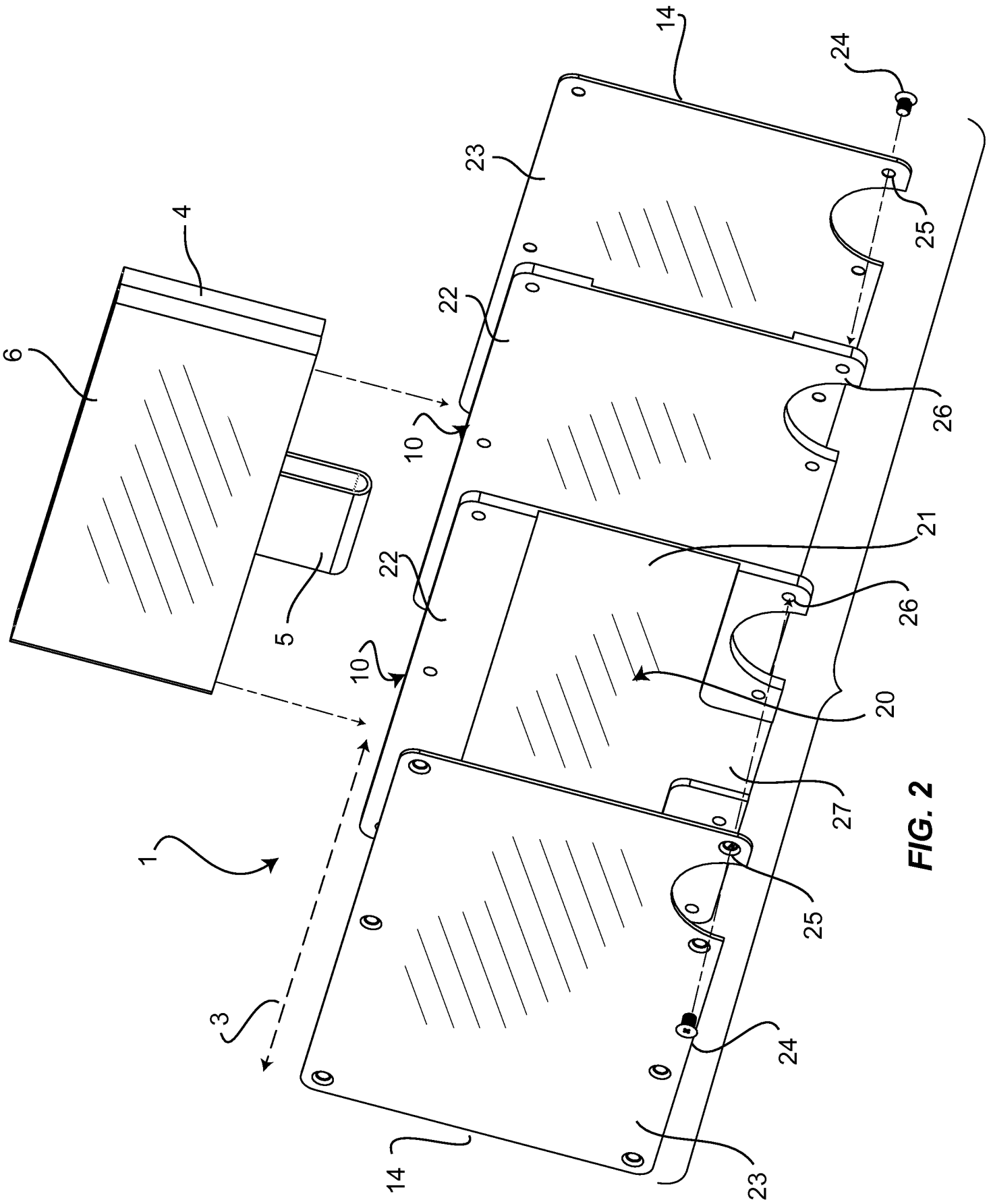

FIG. 2

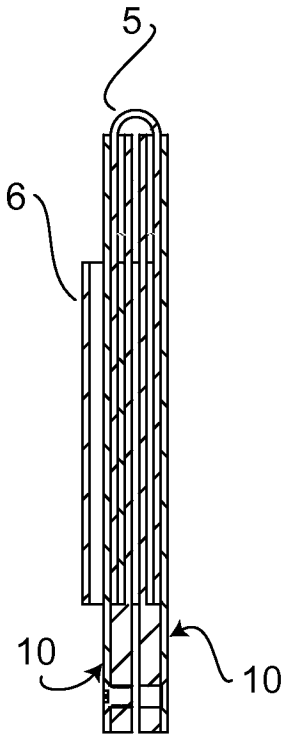

FIG. 4

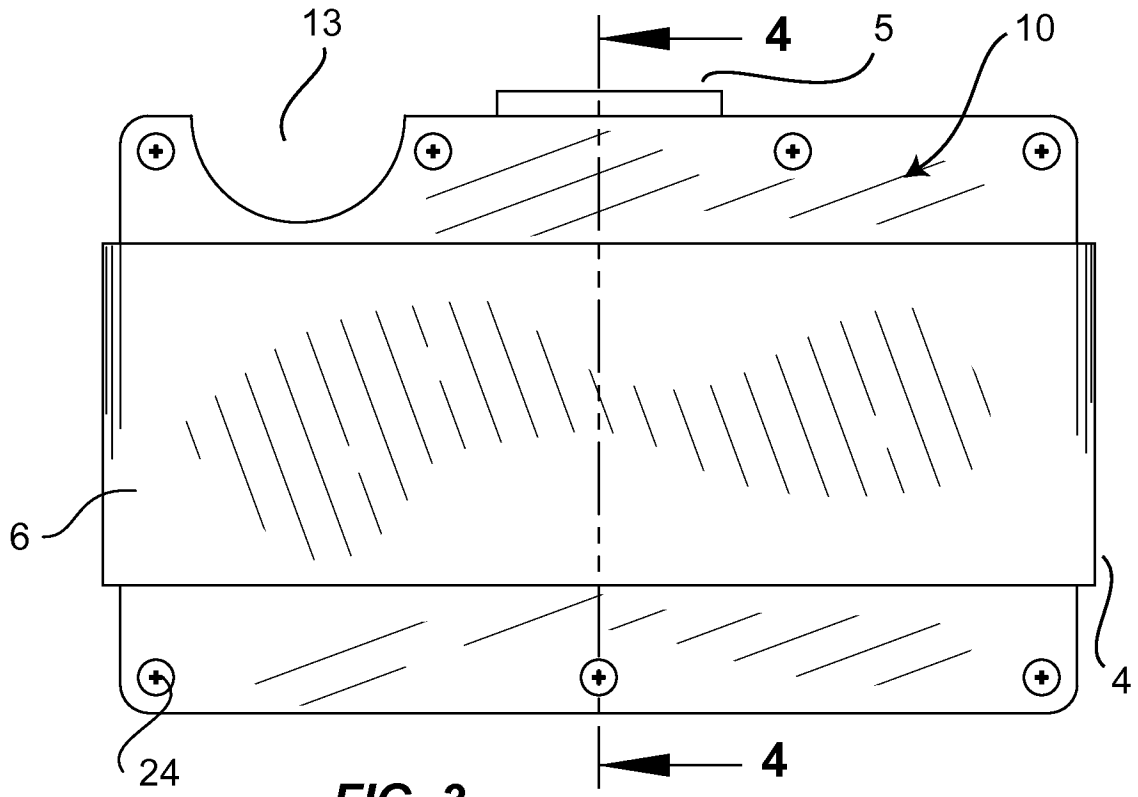

FIG. 3

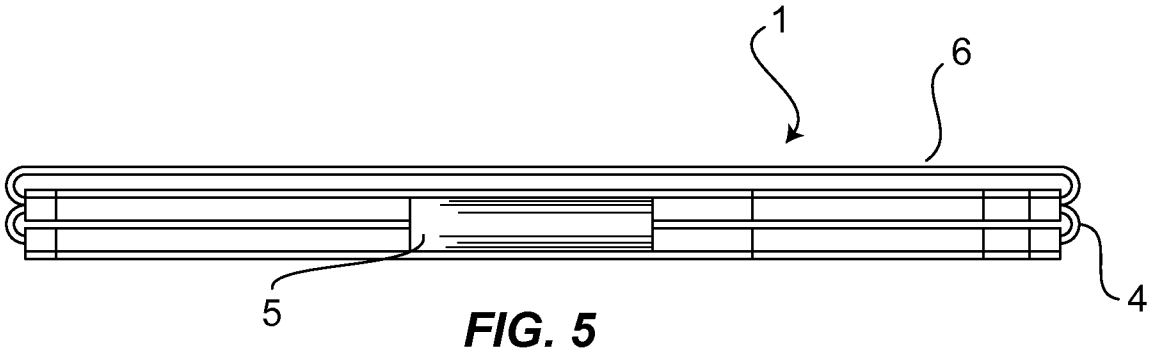

FIG. 5

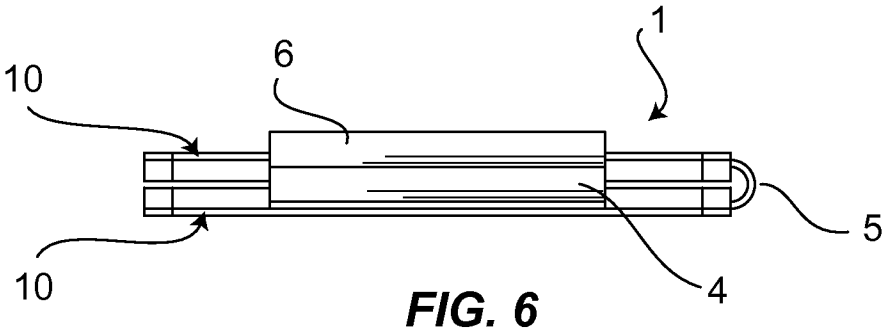

FIG. 6

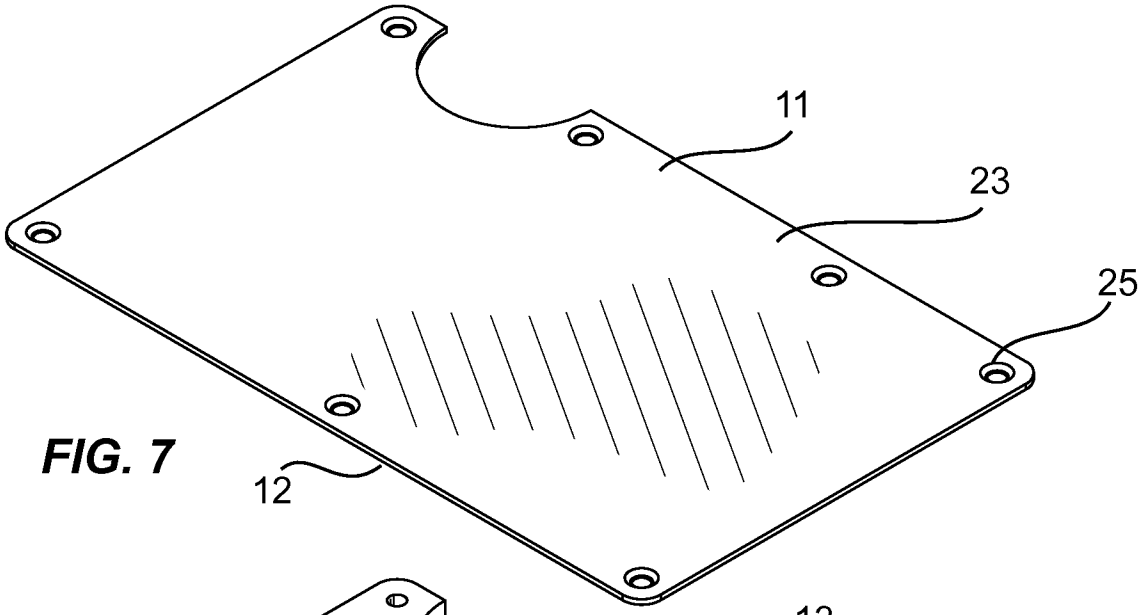

FIG. 7

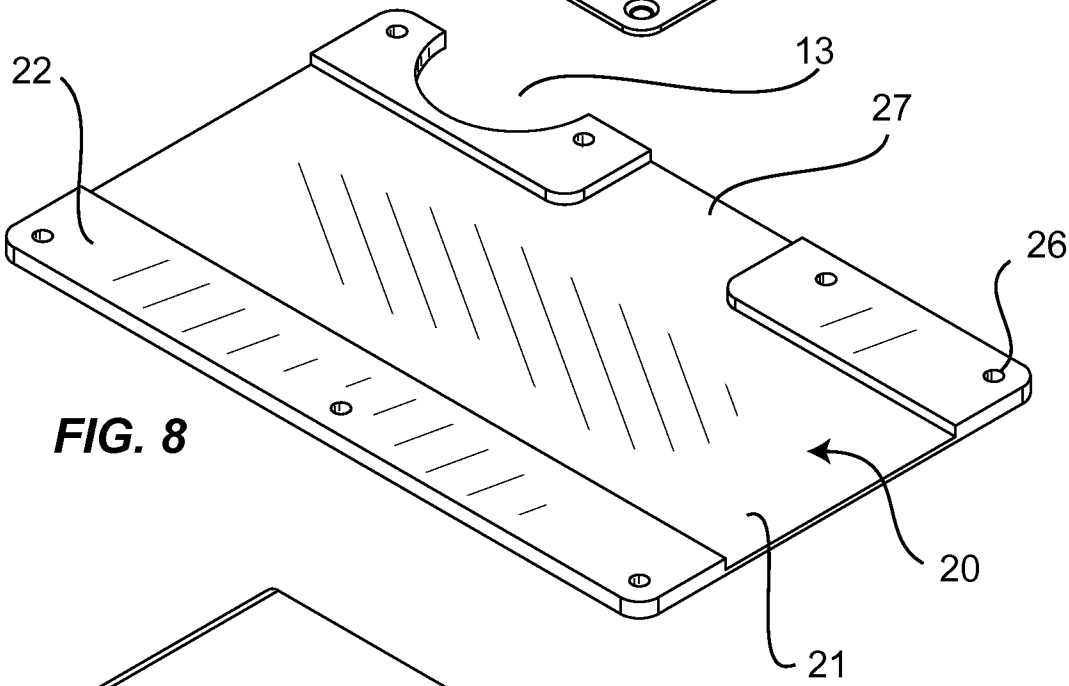

FIG. 8

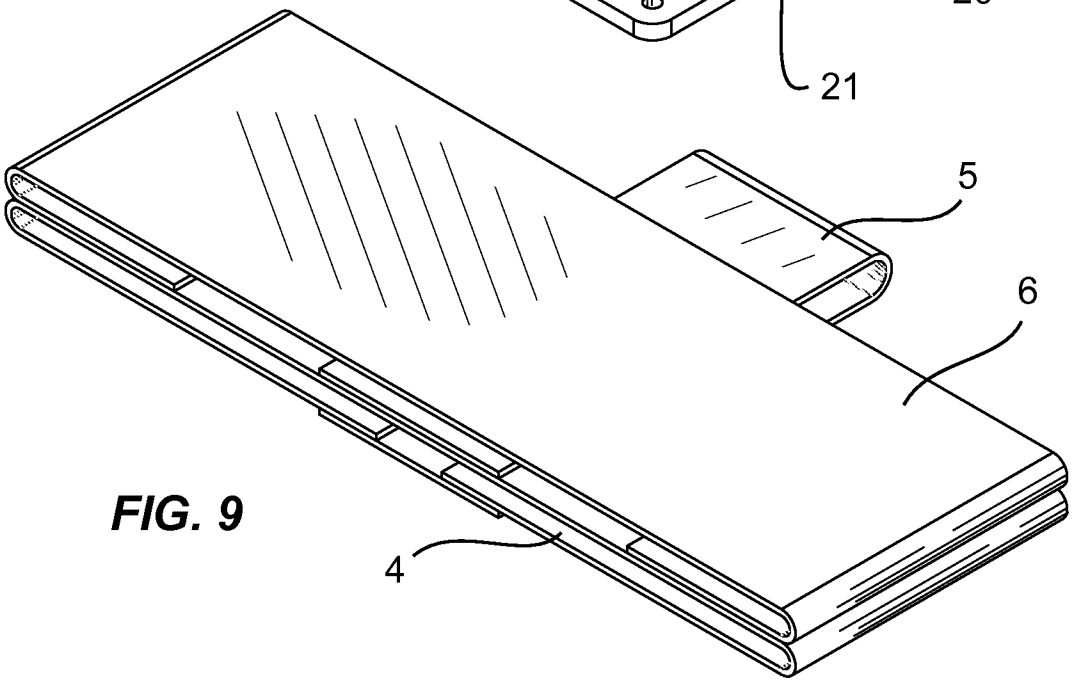

FIG. 9

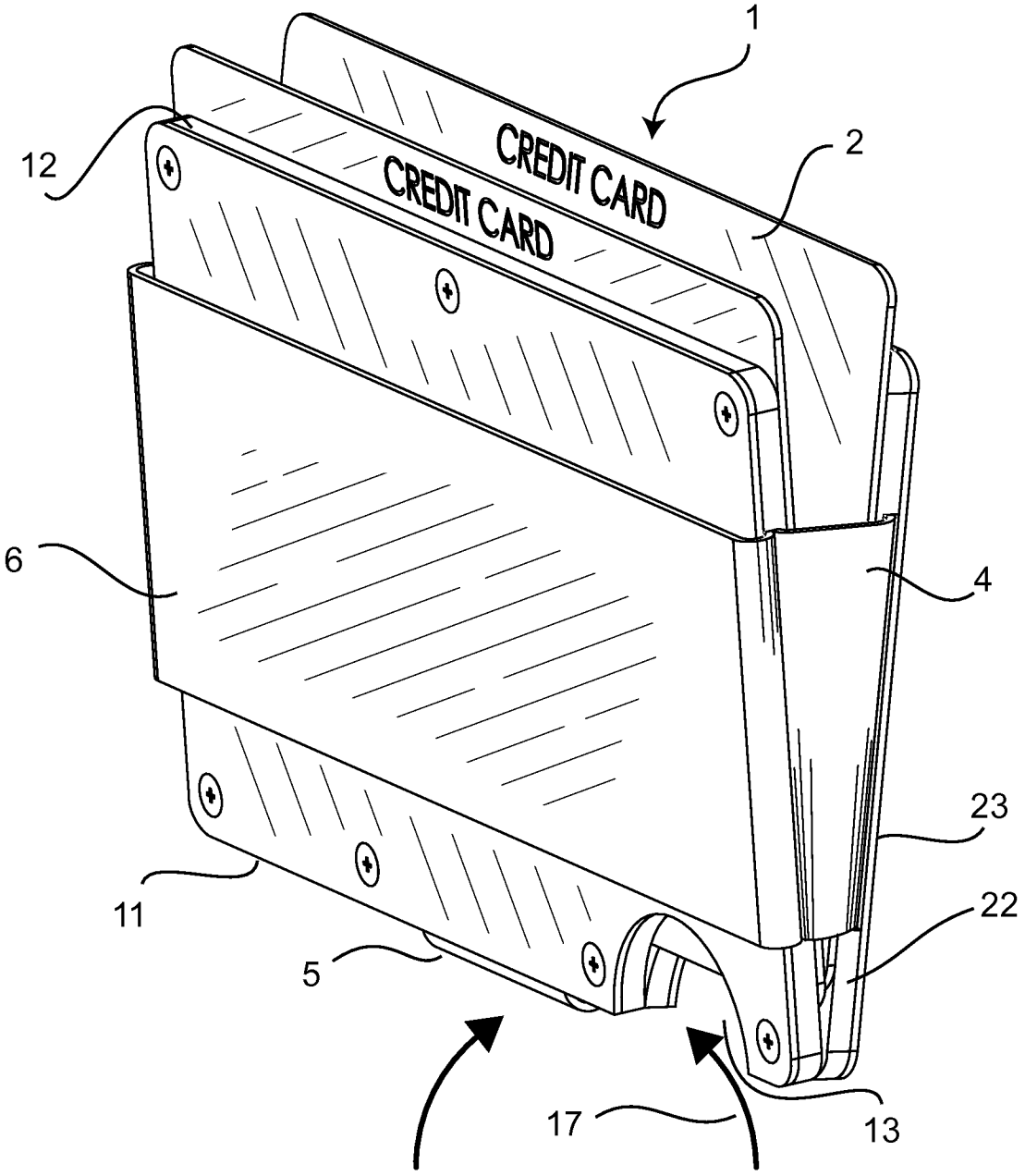

FIG. 10

PTO/SB/08a (01-10)
Approved for use through 07/31/2012. OMB 0651-0031
U.S. Patent and Trademark Office; U.S. DEPARTMENT OF COMMERCE

Under the Paperwork Reduction Act of 1995, no persons are required to respond to a collection of information unless it contains a valid OMB control number.

INFORMATION DISCLOSURE STATEMENT BY APPLICANT (**Not for submission under 37 CFR 1.99)**	Application Number	
	Filing Date	
	First Named Inventor	Kane
	Art Unit	
	Examiner Name	
	Attorney Docket Number	15050 XP

U.S.PATENTS						Remove
Examiner Initial*	Cite No	Patent Number	Kind Code[1]	Issue Date	Name of Patentee or Applicant of cited Document	Pages,Columns,Lines where Relevant Passages or Relevant Figures Appear
	1	7810683	B2	2010-10-12	Chan	
	2	5077869		1992-01-07	Haase	
If you wish to add additional U.S. Patent citation information please click the Add button.						Add

U.S.PATENT APPLICATION PUBLICATIONS						Remove
Examiner Initial*	Cite No	Publication Number	Kind Code[1]	Publication Date	Name of Patentee or Applicant of cited Document	Pages,Columns,Lines where Relevant Passages or Relevant Figures Appear
	1	20140233181	A1	2014-08-21	Harms	
	2	20130276943	A1	2013-10-24	Minn	
	3	20090094795	A1	2009-04-16	Lazarus	
	4	20100139049	A1	2010-06-10	Glickfield	

INFORMATION DISCLOSURE STATEMENT BY APPLICANT (Not for submission under 37 CFR 1.99)	Application Number	
	Filing Date	
	First Named Inventor	Kane
	Art Unit	
	Examiner Name	
	Attorney Docket Number	15050 XP

	5	20050023157	A1	2005-02-03	Logan		

If you wish to add additional U.S. Published Application citation information please click the Add button. Add

FOREIGN PATENT DOCUMENTS Remove

Examiner Initial*	Cite No	Foreign Document Number[3]	Country Code[2] ¡	Kind Code[4]	Publication Date	Name of Patentee or Applicant of cited Document	Pages,Columns,Lines where Relevant Passages or Relevant Figures Appear	T[5]
	1							☐

If you wish to add additional Foreign Patent Document citation information please click the Add button Add

NON-PATENT LITERATURE DOCUMENTS Remove

Examiner Initials*	Cite No	Include name of the author (in CAPITAL LETTERS), title of the article (when appropriate), title of the item (book, magazine, journal, serial, symposium, catalog, etc), date, pages(s), volume-issue number(s), publisher, city and/or country where published.	T[5]
	1		☐

If you wish to add additional non-patent literature document citation information please click the Add button Add

EXAMINER SIGNATURE

Examiner Signature		Date Considered	

*EXAMINER: Initial if reference considered, whether or not citation is in conformance with MPEP 609. Draw line through a citation if not in conformance and not considered. Include copy of this form with next communication to applicant.

[1] See Kind Codes of USPTO Patent Documents at www.USPTO.GOV or MPEP 901.04. [2] Enter office that issued the document, by the two-letter code (WIPO Standard ST.3). [3] For Japanese patent documents, the indication of the year of the reign of the Emperor must precede the serial number of the patent document. [4] Kind of document by the appropriate symbols as indicated on the document under WIPO Standard ST.16 if possible. [5] Applicant is to place a check mark here if English language translation is attached.

INFORMATION DISCLOSURE STATEMENT BY APPLICANT (Not for submission under 37 CFR 1.99)	Application Number	
	Filing Date	
	First Named Inventor	Kane
	Art Unit	
	Examiner Name	
	Attorney Docket Number	15050 XP

CERTIFICATION STATEMENT

Please see 37 CFR 1.97 and 1.98 to make the appropriate selection(s):

☐ That each item of information contained in the information disclosure statement was first cited in any communication from a foreign patent office in a counterpart foreign application not more than three months prior to the filing of the information disclosure statement. See 37 CFR 1.97(e)(1).

OR

☐ That no item of information contained in the information disclosure statement was cited in a communication from a foreign patent office in a counterpart foreign application, and, to the knowledge of the person signing the certification after making reasonable inquiry, no item of information contained in the information disclosure statement was known to any individual designated in 37 CFR 1.56(c) more than three months prior to the filing of the information disclosure statement. See 37 CFR 1.97(e)(2).

☐ See attached certification statement.

☐ The fee set forth in 37 CFR 1.17 (p) has been submitted herewith.

☒ A certification statement is not submitted herewith.

SIGNATURE

A signature of the applicant or representative is required in accordance with CFR 1.33, 10.18. Please see CFR 1.4(d) for the form of the signature.

Signature	/Lawrence Lambelet/	Date (YYYY-MM-DD)	2015-05-06
Name/Print	Lawrence Lambelet	Registration Number	38530

This collection of information is required by 37 CFR 1.97 and 1.98. The information is required to obtain or retain a benefit by the public which is to file (and by the USPTO to process) an application. Confidentiality is governed by 35 U.S.C. 122 and 37 CFR 1.14. This collection is estimated to take 1 hour to complete, including gathering, preparing and submitting the completed application form to the USPTO. Time will vary depending upon the individual case. Any comments on the amount of time you require to complete this form and/or suggestions for reducing this burden, should be sent to the Chief Information Officer, U.S. Patent and Trademark Office, U.S. Department of Commerce, P.O. Box 1450, Alexandria, VA 22313-1450. DO NOT SEND FEES OR COMPLETED FORMS TO THIS ADDRESS. **SEND TO: Commissioner for Patents, P.O. Box 1450, Alexandria, VA 22313-1450.**

Privacy Act Statement

The Privacy Act of 1974 (P.L. 93-579) requires that you be given certain information in connection with your submission of the attached form related to a patent application or patent. Accordingly, pursuant to the requirements of the Act, please be advised that: (1) the general authority for the collection of this information is 35 U.S.C. 2(b)(2); (2) furnishing of the information solicited is voluntary; and (3) the principal purpose for which the information is used by the U.S. Patent and Trademark Office is to process and/or examine your submission related to a patent application or patent. If you do not furnish the requested information, the U.S. Patent and Trademark Office may not be able to process and/or examine your submission, which may result in termination of proceedings or abandonment of the application or expiration of the patent.

The information provided by you in this form will be subject to the following routine uses:

1. The information on this form will be treated confidentially to the extent allowed under the Freedom of Information Act (5 U.S.C. 552) and the Privacy Act (5 U.S.C. 552a). Records from this system of records may be disclosed to the Department of Justice to determine whether the Freedom of Information Act requires disclosure of these record s.

2. A record from this system of records may be disclosed, as a routine use, in the course of presenting evidence to a court, magistrate, or administrative tribunal, including disclosures to opposing counsel in the course of settlement negotiations.

3. A record in this system of records may be disclosed, as a routine use, to a Member of Congress submitting a request involving an individual, to whom the record pertains, when the individual has requested assistance from the Member with respect to the subject matter of the record.

4. A record in this system of records may be disclosed, as a routine use, to a contractor of the Agency having need for the information in order to perform a contract. Recipients of information shall be required to comply with the requirements of the Privacy Act of 1974, as amended, pursuant to 5 U.S.C. 552a(m).

5. A record related to an International Application filed under the Patent Cooperation Treaty in this system of records may be disclosed, as a routine use, to the International Bureau of the World Intellectual Property Organization, pursuant to the Patent Cooperation Treaty.

6. A record in this system of records may be disclosed, as a routine use, to another federal agency for purposes of National Security review (35 U.S.C. 181) and for review pursuant to the Atomic Energy Act (42 U.S.C. 218(c)).

7. A record from this system of records may be disclosed, as a routine use, to the Administrator, General Services, or his/her designee, during an inspection of records conducted by GSA as part of that agency's responsibility to recommend improvements in records management practices and programs, under authority of 44 U.S.C. 2904 and 2906. Such disclosure shall be made in accordance with the GSA regulations governing inspection of records for this purpose, and any other relevant (i.e., GSA or Commerce) directive. Such disclosure shall not be used to make determinations about individuals.

8. A record from this system of records may be disclosed, as a routine use, to the public after either publication of the application pursuant to 35 U.S.C. 122(b) or issuance of a patent pursuant to 35 U.S.C. 151. Further, a record may be disclosed, subject to the limitations of 37 CFR 1.14, as a routine use, to the public if the record was filed in an application which became abandoned or in which the proceedings were terminated and which application is referenced by either a published application, an application open to public inspections or an issued patent.

9. A record from this system of records may be disclosed, as a routine use, to a Federal, State, or local law enforcement agency, if the USPTO becomes aware of a violation or potential violation of law or regulation.

Electronic Acknowledgement Receipt

EFS ID:	22275419
Application Number:	14706019
International Application Number:	
Confirmation Number:	1677
Title of Invention:	COMPACT WALLET
First Named Inventor/Applicant Name:	Daniel Kane
Customer Number:	25957
Filer:	Lawrence Lambelet
Filer Authorized By:	
Attorney Docket Number:	15050 XP
Receipt Date:	07-MAY-2015
Filing Date:	
Time Stamp:	09:02:30
Application Type:	Utility under 35 USC 111(a)

Payment information:

Submitted with Payment	yes
Payment Type	Credit Card
Payment was successfully received in RAM	$730
RAM confirmation Number	18136
Deposit Account	
Authorized User	

The Director of the USPTO is hereby authorized to charge indicated fees and credit any overpayment as follows:

File Listing:

Document Number	Document Description	File Name	File Size(Bytes)/ Message Digest	Multi Part /.zip	Pages (if appl.)
1		AppInNonProv_15050.pdf	182702 d9dbc1785820d2060c8bc8b2e36050b6c694570f	yes	15
	Multipart Description/PDF files in .zip description				
	Document Description		**Start**	**End**	
	Specification		1	10	
	Claims		11	14	
	Abstract		15	15	
Warnings:					
Information:					
2	Drawings-only black and white line drawings	dwgs_wallet_15050.pdf	226376 b6514853361735546a48c12d56ece53b437a4781	no	5
Warnings:					
Information:					
3	Application Data Sheet	aia0014_signed.pdf	1560764 61085d25dd5bfec01ba21b9fc3a68a8fbb7a29e9	no	7
Warnings:					
Information:					
4	Oath or Declaration filed	aia0001.pdf	169624 96b36e66e435db9546d179b0efbb34c2bb18834c	no	2
Warnings:					
Information:					
5	Information Disclosure Statement (IDS) Form (SB08)	updated_IDS_signed.pdf	612317 ad85e4272100ea355b32da1cd9635aa0d0f9f614	no	4
Warnings:					
Information:					
6	Fee Worksheet (SB06)	fee-info.pdf	34816 e782c372761bc2d733de1faa0466358cd045c3b8	no	2

Warnings:	
Information:	
Total Files Size (in bytes):	2786599

This Acknowledgement Receipt evidences receipt on the noted date by the USPTO of the indicated documents, characterized by the applicant, and including page counts, where applicable. It serves as evidence of receipt similar to a Post Card, as described in MPEP 503.

New Applications Under 35 U.S.C. 111
If a new application is being filed and the application includes the necessary components for a filing date (see 37 CFR 1.53(b)-(d) and MPEP 506), a Filing Receipt (37 CFR 1.54) will be issued in due course and the date shown on this Acknowledgement Receipt will establish the filing date of the application.

National Stage of an International Application under 35 U.S.C. 371
If a timely submission to enter the national stage of an international application is compliant with the conditions of 35 U.S.C. 371 and other applicable requirements a Form PCT/DO/EO/903 indicating acceptance of the application as a national stage submission under 35 U.S.C. 371 will be issued in addition to the Filing Receipt, in due course.

New International Application Filed with the USPTO as a Receiving Office
If a new international application is being filed and the international application includes the necessary components for an international filing date (see PCT Article 11 and MPEP 1810), a Notification of the International Application Number and of the International Filing Date (Form PCT/RO/105) will be issued in due course, subject to prescriptions concerning national security, and the date shown on this Acknowledgement Receipt will establish the international filing date of the application.

PTO/AIA/01 (06-12)
Approved for use through 01/31/2014. OMB 0651-0032
U.S. Patent and Trademark Office; U.S. DEPARTMENT OF COMMERCE
Under the Paperwork Reduction Act of 1995, no persons are required to respond to a collection of information unless it displays a valid OMB control number.

DECLARATION (37 CFR 1.63) FOR UTILITY OR DESIGN APPLICATION USING AN APPLICATION DATA SHEET (37 CFR 1.76)

Title of Invention	COMPACT WALLET

As the below named inventor, I hereby declare that:

This declaration is directed to:

- [x] The attached application, or
- [ ] United States application or PCT international application number _____

filed on _____.

The above-identified application was made or authorized to be made by me.

I believe that I am the original inventor or an original joint inventor of a claimed invention in the application.

I hereby acknowledge that any willful false statement made in this declaration is punishable under 18 U.S.C. 1001 by fine or imprisonment of not more than five (5) years, or both.

WARNING:

Petitioner/applicant is cautioned to avoid submitting personal information in documents filed in a patent application that may contribute to identity theft. Personal information such as social security numbers, bank account numbers, or credit card numbers (other than a check or credit card authorization form PTO-2038 submitted for payment purposes) is never required by the USPTO to support a petition or an application. If this type of personal information is included in documents submitted to the USPTO, petitioners/applicants should consider redacting such personal information from the documents before submitting them to the USPTO. Petitioner/applicant is advised that the record of a patent application is available to the public after publication of the application (unless a non-publication request in compliance with 37 CFR 1.213(a) is made in the application) or issuance of a patent. Furthermore, the record from an abandoned application may also be available to the public if the application is referenced in a published application or an issued patent (see 37 CFR 1.14). Checks and credit card authorization forms PTO-2038 submitted for payment purposes are not retained in the application file and therefore are not publicly available.

LEGAL NAME OF INVENTOR

Inventor: Daniel Kane Date (Optional) : May 6, 2015

Signature: /Daniel Kane/

Note: An application data sheet (PTO/SB/14 or equivalent), including naming the entire inventive entity, must accompany this form or must have been previously filed. Use an additional PTO/AIA/01 form for each additional inventor.

This collection of information is required by 35 U.S.C. 115 and 37 CFR 1.63. The information is required to obtain or retain a benefit by the public which is to file (and by the USPTO to process) an application. Confidentiality is governed by 35 U.S.C. 122 and 37 CFR 1.11 and 1.14. This collection is estimated to take 1 minute to complete, including gathering, preparing, and submitting the completed application form to the USPTO. Time will vary depending upon the individual case. Any comments on the amount of time you require to complete this form and/or suggestions for reducing this burden, should be sent to the Chief Information Officer, U.S. Patent and Trademark Office, U.S. Department of Commerce, P.O. Box 1450, Alexandria, VA 22313-1450. DO NOT SEND FEES OR COMPLETED FORMS TO THIS ADDRESS. **SEND TO: Commissioner for Patents, P.O. Box 1450, Alexandria, VA 22313-1450.**

If you need assistance in completing the form, call 1-800-PTO-9199 and select option 2.

Privacy Act Statement

The **Privacy Act of 1974 (P.L. 93-579)** requires that you be given certain information in connection with your submission of the attached form related to a patent application or patent. Accordingly, pursuant to the requirements of the Act, please be advised that: (1) the general authority for the collection of this information is 35 U.S.C. 2(b)(2); (2) furnishing of the information solicited is voluntary; and (3) the principal purpose for which the information is used by the U.S. Patent and Trademark Office is to process and/or examine your submission related to a patent application or patent. If you do not furnish the requested information, the U.S. Patent and Trademark Office may not be able to process and/or examine your submission, which may result in termination of proceedings or abandonment of the application or expiration of the patent.

The information provided by you in this form will be subject to the following routine uses:

1. The information on this form will be treated confidentially to the extent allowed under the Freedom of Information Act (5 U.S.C. 552) and the Privacy Act (5 U.S.C 552a). Records from this system of records may be disclosed to the Department of Justice to determine whether disclosure of these records is required by the Freedom of Information Act.
2. A record from this system of records may be disclosed, as a routine use, in the course of presenting evidence to a court, magistrate, or administrative tribunal, including disclosures to opposing counsel in the course of settlement negotiations.
3. A record in this system of records may be disclosed, as a routine use, to a Member of Congress submitting a request involving an individual, to whom the record pertains, when the individual has requested assistance from the Member with respect to the subject matter of the record.
4. A record in this system of records may be disclosed, as a routine use, to a contractor of the Agency having need for the information in order to perform a contract. Recipients of information shall be required to comply with the requirements of the Privacy Act of 1974, as amended, pursuant to 5 U.S.C. 552a(m).
5. A record related to an International Application filed under the Patent Cooperation Treaty in this system of records may be disclosed, as a routine use, to the International Bureau of the World Intellectual Property Organization, pursuant to the Patent Cooperation Treaty.
6. A record in this system of records may be disclosed, as a routine use, to another federal agency for purposes of National Security review (35 U.S.C. 181) and for review pursuant to the Atomic Energy Act (42 U.S.C. 218(c)).
7. A record from this system of records may be disclosed, as a routine use, to the Administrator, General Services, or his/her designee, during an inspection of records conducted by GSA as part of that agency's responsibility to recommend improvements in records management practices and programs, under authority of 44 U.S.C. 2904 and 2906. Such disclosure shall be made in accordance with the GSA regulations governing inspection of records for this purpose, and any other relevant (*i.e.*, GSA or Commerce) directive. Such disclosure shall not be used to make determinations about individuals.
8. A record from this system of records may be disclosed, as a routine use, to the public after either publication of the application pursuant to 35 U.S.C. 122(b) or issuance of a patent pursuant to 35 U.S.C. 151. Further, a record may be disclosed, subject to the limitations of 37 CFR 1.14, as a routine use, to the public if the record was filed in an application which became abandoned or in which the proceedings were terminated and which application is referenced by either a published application, an application open to public inspection or an issued patent.
9. A record from this system of records may be disclosed, as a routine use, to a Federal, State, or local law enforcement agency, if the USPTO becomes aware of a violation or potential violation of law or regulation.

TITLE: COMPACT WALLET

This is a U.S. Non-Provisional Patent Application.

FIELD OF THE INVENTION

This invention relates to billfold wallets, and more particularly to low-profile wallets for credit cards.

BACKGROUND OF THE INVENTION

Who among us would not prefer a wallet minimally-sized to just the stack of credit cards carried in the typical bi- or tri-fold leather wallet? Such a minimalist wallet could be easily slipped into a shirt pocket, or present a slim profile in a pants pocket or purse. Even with money clipped to it, the bulk of such a wallet would be less than that of the fold-over-envelope-type-wallet traditionally used to carry cards, money and identification. Such a traditional wallet, with its internal sleeves, compartments, and windows, not to mention contents, can bulge uncomfortably or telltale-like from clothing, or inconveniently in a handbag, while giving little protection from moisture, bending or electronic snooping.

In the lifestyle of today, purchases are made more and more with credit or debit cards or through electronic wallets, such as Apple Pay™ or Google Wallet™. Carrying cash,

SHENZHEN PINCAN Exhibit 1017 Page 27

except for an emergency bill or two, has increasingly become both unnecessary and inconvenient in consideration of the nuisance in making change and risk of loss through theft or carelessness. The traditional wallet, initially designed to carry cash in bills, and sometimes coins and checks also, is correspondingly evolving into obsolescence in view of the convenience and record-keeping benefit of credit/debit cards. The bare essentials today are a charge card of some type and an item of identification, both, serendipitously, of generally the same size.

Money clips are common in the art and some money clips also made accommodation for credit cards. The clip, typically of hairpin-like configuration, has protrusion which can snag in a pocket of clothing or purse. Other known devices sandwich cards and/or money between bookend plates bound with elastic strapping. The strapping allows for an expandable interior volume while providing compression to grip the contents. The profile of the plates is generally larger than that of the contents, the out-sizing necessary to provide structure for either guiding the strapping or for fixtures to terminate the strapping. In most cases, the running length of the strapping is limited by the distance between fixture locations on the plates, which limits the expansion capability and, therefore, the capacity for contents. In other cases, it becomes difficult to view the stored contents without moving them all. In other cases, selectively withdrawing of just one of the contents, particularly with a presentation of the shorter edge, is frustrated by the compaction applied. In other cases, replacement of the straps when worn or stretched out is discouraged by assembly design. In other cases, the plates are of insufficient rigidity to protect the contents from bending.

SHENZHEN PINCAN Exhibit 1017 Page 28

The unfulfilled need is for a compact wallet which would be minimally dimensioned to the prototypical credit card profile. Such a compact wallet would be void of any potentially snagging structural appendages while optimizing volume expansion and view-ability of contents.

SUMMARY OF THE INVENTION

The present invention utilizes bookend plates resiliently bound with an encircling elastic band to contain one or more credit card-sized objects in a wallet configuration. A novel feature maximizes the expansion of interior volume by allowing the strap to expand along a maximum length afforded by a longitudinal dimension of the wallet while avoiding anchor points which would effectively shorten the length. Another novel feature achieves minimal sizing of the plates by channeling the strap with interior means rather than by means of profile extensions. Yet another novel feature achieves easy access to, and viewing of, the contents through a cut-away feature which allows the contents to be partially pushed up where a fulcrum is provided for pinching the plates together and fanning out the contents.

It is, therefore, an object of the invention to provide a compact wallet substantially no larger than a credit card. It is a further object to maximize expandability of the wallet to accommodate multiple objects of substantially the same size. It is a further object to protect the contents of the wallet from damage or loss by open-ended drop through. It is

SHENZHEN PINCAN Exhibit 1017 Page 29

a further object to facilitate selection of any one object from the bound group. It is a further object to accommodate folded currency handily on the outside of the wallet. It is a further object to present essentially smooth contours for snag-free passage into and out of pockets of clothing or bags. It is a further object to provide means and method for changing out elastic bounding bands.

These objects, and others to become hereinafter apparent, are embodied in a compact wallet comprising, in a first element, at least two rigid plates interposed to sandwich card-like contents there between, each rigid plate having a longitudinal extent. A second element is at least one encircling elastic band interposed with the at least two rigid plates, over the longitudinal extents thereof, to bias them inwardly and securely hold the card-like contents while providing elastic volume between the plates for adding additional contents. A third element is a channeling means configured to minimize the profile of the wallet and hold position of the at least one encircling elastic band with respect to each rigid plate. The channeling means additionally allows freedom for the dynamic extension and contraction of the band over the entire running length of the band. With such means and in such manner, card-like contents may be carried with minimal silhouette on or with a person while allowing expandable capacity and ready access to individual contents from between the at least two rigid plates.

In a preferred embodiment, the channeling means is a longitudinal groove in a first lamina of a laminate construction of each rigid plate. The groove slidingly receives one part of the at least one encircling elastic band. In one instance of the preferred

SHENZHEN PINCAN Exhibit 1017 Page 30

embodiment, a second lamina of the laminate construction of each rigid plate is removably attached to the first lamina to hold the at least one elastic band in capture and provide a smooth surface for glide purposes. In another instance, the second lamina is attached to the first lamina by screws.

As this is not intended to be an exhaustive recitation, other embodiments may be learned from practicing the invention or may otherwise become apparent to those skilled in the art.

DESCRIPTION OF THE DRAWINGS

Various other objects, features and attendant advantages of the present invention will become fully appreciated as the same becomes better understood through the accompanying drawings and the following detailed description, in which like reference characters designate the same or similar parts throughout the several views, and wherein:

FIG. 1 is a perspective view of the compact wallet of the present invention showing currency banded to the outside thereof and a credit card extended into view by means of a finger notch;

FIG. 2 is an exploded view of the compact wallet;

FIG. 3 is a plan view of the compact wallet;

FIG. 4 is a section view taken along the lines 4-4 of FIG. 3;

FIG. 5 is a top view of the compact wallet;

SHENZHEN PINCAN Exhibit 1017 Page 31

FIG. 6 is a right-side view of the compact wallet;

FIG. 7 is a perspective view of a second lamina of a laminate construction of one of the rigid plates;

FIG. 8 is a perspective view of a first lamina of the laminate construction showing a groove for channeling an encircling elastic band;

FIG. 9 is a perspective view of the elastic band showing first and second appendant straps; and

FIG. 10 is a perspective view of a fanned open compact wallet.

DETAILED DESCRIPTION OF THE PREFERRED EMBODIMENT

Referring to Fig's 1 and 2, a compact wallet **1** is comprised of at least two rigid plates **10**, serving as "bookends" as it were, with one or more card-like contents **2** sandwiched between them. The sandwiched composite is bound by at least one encircling elastic band **4**. The encircling elastic band **4** holds the card-like contents **2** securely by means of compression, while also expanding elastically to open space between the rigid plates **10**. The added volume of the space provides capacity for additional contents. The rigid plates **10** are sized to the dimensions of a standard credit card and the resulting perimeter defines a profile **14**. A channeling means **20** prevents the encircling elastic band **4** from adding more than negligible breadth to profile **14**. This profile minimization is accomplished by locating the channeling means **20** internally to the rigid plates **10**. In other words, no structures projecting from the profile **14** are needed to fixture the encircling band **4**, as in the case of prior art.

SHENZHEN PINCAN Exhibit 1017 Page 32

Referring to Fig's 2 to 9, the channeling means **20** of the preferred embodiment is a longitudinal groove **21** spanning a longitudinal extent **3** of each rigid plate **10**. The longitudinal groove **21** is of such ample dimension as to receive a corresponding part of the encircling elastic band **4** and allow it to slidingly expand and contract freely while holding position there within. In this way, the full running length of the band can be exercised for expansion while contraction is rendered responsive. The result is a maximally achievable opening between the plates whereby filling volume is optimized.

In one preferred embodiment, the longitudinal groove **21** traverses a first lamina **22** of a laminate construction of each rigid plate **10**. The first lamina **22** is capped with a second lamina **23** to capture on portion of the encircling elastic band **4** and complete the channeling means **20**. The second lamina **23** is preferably attached removably to the first lamina **22** to enable the encircling elastic band **4** to be changed out at the end of its service life. In a particular preferred embodiment, the attachment is made by flat-headed screws **24** threaded into threaded holes **26** in the first lamina **22** through countersunk holes **25** in the second lamina. The flat-heading and counter-sinking of the screws provide a smooth outer surface to the compact wallet **1**, thereby permitting snag-free glide into pockets or other containment vessels. In an alternate embodiment, the attachment mechanism may include appropriately placed pressure sensitive adhesive strips (not shown). Other attachment means, known in the art, are also contemplated as within scope.

SHENZHEN PINCAN Exhibit 1017 Page 33

In one preferred embodiment shown in Fig's 1 and 10, a finger notch **13** is provided in the periphery at a proximal end **11** of each rigid plate **10** such that the notches of facing plates are aligned. To accomplish the alignment, each plate must be configured in a mirror image of the other. The finger notches **13** expose an edge of the card like contents **2**. Using a finger in the finger notch, the card-like contents **2** can be urged upwardly in a lifting maneuver **16** by pressing against the exposed edge to elevate the card-like contents above distal ends **12** of the rigid plates **10**. The lifting maneuver **16** makes the card-line contents **2** available for inspection and selection, which would otherwise be difficult tasks when masked by the plates. The display of contents can be further enhanced by a pinching maneuver **17,** which is accomplished by pinching the proximal ends **11** together about the fulcrum of the exposed edge of the contents rendered offset from the proximal ends **11** by the preceding maneuver. The pinching maneuver **17** fans open the distal ends **12** and facilitates separation of the card-like contents for further inspection and ease of selection.

In one preferred embodiment, as shown in Fig's 3-6 and 9, a first elastic strap **5** is positioned over the proximal ends **11** of the rigid plates **10**. The first elastic strap **5** registers the card like contents to the proximal ends **11** and prevents them from slipping beyond the ends when expansion takes place. Preferably, the first elastic strap **5** is attached to the encircling elastic band **4** by sewing, or bonding, by access through the transverse groove **27** (Fig's 2 and 8). Alternatively, the first elastic strap **5** is attached to each rigid plate **10** by any known means. In one preferred embodiment, a second elastic strap **6** is positioned over the outside surface of one of the rigid plates **10** to strap thereon

SHENZHEN PINCAN Exhibit 1017 Page 34

currency **8** (Fig. 1), or additional card-like contents **2**. Preferably, the second elastic strap **6** is attached to the encircling elastic band **4** by sewing, or bonding, by access through the longitudinal groove **21**. Alternatively, the second elastic strap **6** is attached to the rigid plate **10** of its intimacy by any known means. In an alternate embodiment, a prior art money clip (not shown) attached to one of the rigid plates **10** may be used to serve this functionality.

In the preferred embodiment, the card-like contents include, but are not limited to, credit cards, a driver's license, ID cards, business cards, affiliation/membership cards, currency bills, loyalty cards, coupons, a calendar, receipts or any paper or card-stock item of a personal or business nature. The rigid plates **10** are either comprised of metal, or otherwise integrate a metalized surface, for radio-frequency identification (RFID) theft protection purposes, as credit cards are increasingly using RFID chips. A substrate can be metalized by electric deposition, by casting, or otherwise by bonding on or taping on a foil. In the preferred embodiment, the first lamina **22** is fabricated from aluminum plate of 2 mm gauge by machining. Alternatively, the first lamina **22** may be 316 stainless steel (SS), or may otherwise be injection molded with high-impact polystyrene (HIPS), acrylonitrile butadiene styrene (ABS) or any resin with stiffness property. The second lamina **23** may be fabricated from similar materials and methods as the first lamina **22**, although not necessarily matched thereto. For example, the second lamina **23** may be die-cut from polystyrene sheet stock of 0.7 mm gauge and mated with machined SS from plate stock used for the first lamina **22**. The rigid plates **10**, and the profile **14** by definition, preferably measure approximately 8.5 cm by 5.4 cm. In the preferred

SHENZHEN PINCAN Exhibit 1017 Page 35

embodiment, the flat-headed screws **24** are comprised of 316 SS; but may also, in the alternative, be made of aluminum or any other metal alloy. The encircling elastic band **4**, the first elastic strap **5** and second elastic strap **6** may be any rubber, or rubberized, material configured in a web. In the preferred embodiment, the band and straps are of 3 cm woven elastic fabric, such as that found at the John Howard Company. Alternatively, the bands and straps may differ from each other in materials and sizes.

The compact wallet **1** may be provided at retail in a system configuration with a tool, such as a driver (not shown), to assist with assembly or disassembly. The system may also include an instruction card (not shown), or pamphlet, a spare encircling elastic band **4** or one or more spare flat-headed screws **24**. The compact wallet **1** may supplied either assembled or disassembled in the system configuration.

It is to be understood that the invention is not limited in its application to the details of construction and to the arrangements of the components set forth in the preceding description or illustrated in the drawings. For example, the channeling means **20** might be a longitudinal bore through each rigid plate **10**. Also, it is to be understood that the phraseology and terminology employed herein are for the purpose of the description and should not be regarded as limiting.

SHENZHEN PINCAN Exhibit 1017 Page 36

Electronic Patent Application Fee Transmittal

Application Number:	
Filing Date:	
Title of Invention:	COMPACT WALLET
First Named Inventor/Applicant Name:	Daniel Kane
Filer:	Lawrence Lambelet/Patrick Walsh
Attorney Docket Number:	15050 XP

Filed as Small Entity

Filing Fees for Utility under 35 USC 111(a)

Description	Fee Code	Quantity	Amount	Sub-Total in USD($)
Basic Filing:				
Utility filing Fee (Electronic filing)	4011	1	70	70
Utility Search Fee	2111	1	300	300
Utility Examination Fee	2311	1	360	360
Pages:				
Claims:				
Miscellaneous-Filing:				
Petition:				
Patent-Appeals-and-Interference:				

Description	Fee Code	Quantity	Amount	Sub-Total in USD($)
Post-Allowance-and-Post-Issuance:				
Extension-of-Time:				
Miscellaneous:				
			Total in USD ($)	**730**

UNITED STATES PATENT AND TRADEMARK OFFICE

UNITED STATES DEPARTMENT OF COMMERCE
United States Patent and Trademark Office
Address: COMMISSIONER FOR PATENTS
P.O. Box 1450
Alexandria, Virginia 22313-1450
www.uspto.gov

APPLICATION NUMBER	FILING or 371(c) DATE	GRP ART UNIT	FIL FEE REC'D	ATTY.DOCKET.NO	TOT CLAIMS	IND CLAIMS
14/706,019	05/07/2015	3728	730	15050 XP	18	2

CONFIRMATION NO. 1677

FILING RECEIPT

OC000000075187923

25957
LAWRENCE E. LAMBELET JR.
2 Stout Court
FLEMINGTON, NJ 08822

Date Mailed: 05/15/2015

Receipt is acknowledged of this non-provisional patent application. The application will be taken up for examination in due course. Applicant will be notified as to the results of the examination. Any correspondence concerning the application must include the following identification information: the U.S. APPLICATION NUMBER, FILING DATE, NAME OF APPLICANT, and TITLE OF INVENTION. Fees transmitted by check or draft are subject to collection. Please verify the accuracy of the data presented on this receipt. **If an error is noted on this Filing Receipt, please submit a written request for a Filing Receipt Correction. Please provide a copy of this Filing Receipt with the changes noted thereon. If you received a "Notice to File Missing Parts" for this application, please submit any corrections to this Filing Receipt with your reply to the Notice. When the USPTO processes the reply to the Notice, the USPTO will generate another Filing Receipt incorporating the requested corrections**

Inventor(s)

Daniel Kane, Agoura Hills, CA;

Applicant(s)

Daniel Kane, Agoura Hills, CA;

Power of Attorney: None

Domestic Applications for which benefit is claimed - None.
A proper domestic benefit claim must be provided in an Application Data Sheet in order to constitute a claim for domestic benefit. See 37 CFR 1.76 and 1.78.

Foreign Applications for which priority is claimed (You may be eligible to benefit from the **Patent Prosecution Highway** program at the USPTO. Please see http://www.uspto.gov for more information.) - None.
Foreign application information must be provided in an Application Data Sheet in order to constitute a claim to foreign priority. See 37 CFR 1.55 and 1.76.

If Required, Foreign Filing License Granted: 05/14/2015

The country code and number of your priority application, to be used for filing abroad under the Paris Convention, is **US 14/706,019**

Projected Publication Date: 11/10/2016

Non-Publication Request: No

Early Publication Request: No
**** SMALL ENTITY ****

SHENZHEN PINCAN Exhibit 1017 Page 39

Title

COMPACT WALLET

Preliminary Class

206

Statement under 37 CFR 1.55 or 1.78 for AIA (First Inventor to File) Transition Applications: No

PROTECTING YOUR INVENTION OUTSIDE THE UNITED STATES

Since the rights granted by a U.S. patent extend only throughout the territory of the United States and have no effect in a foreign country, an inventor who wishes patent protection in another country must apply for a patent in a specific country or in regional patent offices. Applicants may wish to consider the filing of an international application under the Patent Cooperation Treaty (PCT). An international (PCT) application generally has the same effect as a regular national patent application in each PCT-member country. The PCT process **simplifies** the filing of patent applications on the same invention in member countries, but **does not result** in a grant of "an international patent" and does not eliminate the need of applicants to file additional documents and fees in countries where patent protection is desired.

Almost every country has its own patent law, and a person desiring a patent in a particular country must make an application for patent in that country in accordance with its particular laws. Since the laws of many countries differ in various respects from the patent law of the United States, applicants are advised to seek guidance from specific foreign countries to ensure that patent rights are not lost prematurely.

Applicants also are advised that in the case of inventions made in the United States, the Director of the USPTO must issue a license before applicants can apply for a patent in a foreign country. The filing of a U.S. patent application serves as a request for a foreign filing license. The application's filing receipt contains further information and guidance as to the status of applicant's license for foreign filing.

Applicants may wish to consult the USPTO booklet, "General Information Concerning Patents" (specifically, the section entitled "Treaties and Foreign Patents") for more information on timeframes and deadlines for filing foreign patent applications. The guide is available either by contacting the USPTO Contact Center at 800-786-9199, or it can be viewed on the USPTO website at http://www.uspto.gov/web/offices/pac/doc/general/index.html.

For information on preventing theft of your intellectual property (patents, trademarks and copyrights), you may wish to consult the U.S. Government website, http://www.stopfakes.gov. Part of a Department of Commerce initiative, this website includes self-help "toolkits" giving innovators guidance on how to protect intellectual property in specific countries such as China, Korea and Mexico. For questions regarding patent enforcement issues, applicants may call the U.S. Government hotline at 1-866-999-HALT (1-866-999-4258).

LICENSE FOR FOREIGN FILING UNDER

Title 35, United States Code, Section 184

Title 37, Code of Federal Regulations, 5.11 & 5.15

GRANTED

The applicant has been granted a license under 35 U.S.C. 184, if the phrase "IF REQUIRED, FOREIGN FILING LICENSE GRANTED" followed by a date appears on this form. Such licenses are issued in all applications where the conditions for issuance of a license have been met, regardless of whether or not a license may be required as set forth in 37 CFR 5.15. The scope and limitations of this license are set forth in 37 CFR 5.15(a) unless an earlier license has been issued under 37 CFR 5.15(b). The license is subject to revocation upon written notification. The date indicated is the effective date of the license, unless an earlier license of similar scope has been granted under 37 CFR 5.13 or 5.14.

This license is to be retained by the licensee and may be used at any time on or after the effective date thereof unless it is revoked. This license is automatically transferred to any related applications(s) filed under 37 CFR 1.53(d). This license is not retroactive.

The grant of a license does not in any way lessen the responsibility of a licensee for the security of the subject matter as imposed by any Government contract or the provisions of existing laws relating to espionage and the national security or the export of technical data. Licensees should apprise themselves of current regulations especially with respect to certain countries, of other agencies, particularly the Office of Defense Trade Controls, Department of State (with respect to Arms, Munitions and Implements of War (22 CFR 121-128)); the Bureau of Industry and Security, Department of Commerce (15 CFR parts 730-774); the Office of Foreign AssetsControl, Department of Treasury (31 CFR Parts 500+) and the Department of Energy.

NOT GRANTED

No license under 35 U.S.C. 184 has been granted at this time, if the phrase "IF REQUIRED, FOREIGN FILING LICENSE GRANTED" DOES NOT appear on this form. Applicant may still petition for a license under 37 CFR 5.12, if a license is desired before the expiration of 6 months from the filing date of the application. If 6 months has lapsed from the filing date of this application and the licensee has not received any indication of a secrecy order under 35 U.S.C. 181, the licensee may foreign file the application pursuant to 37 CFR 5.15(b).

SelectUSA

The United States represents the largest, most dynamic marketplace in the world and is an unparalleled location for business investment, innovation, and commercialization of new technologies. The U.S. offers tremendous resources and advantages for those who invest and manufacture goods here. Through SelectUSA, our nation works to promote and facilitate business investment. SelectUSA provides information assistance to the international investor community; serves as an ombudsman for existing and potential investors; advocates on behalf of U.S. cities, states, and regions competing for global investment; and counsels U.S. economic development organizations on investment attraction best practices. To learn more about why the United States is the best country in the world to develop technology, manufacture products, deliver services, and grow your business, visit http://www.SelectUSA.gov or call +1-202-482-6800.

PATENT APPLICATION FEE DETERMINATION RECORD

Substitute for Form PTO-875

Application or Docket Number
14/706,019

APPLICATION AS FILED - PART I

FOR	(Column 1) NUMBER FILED	(Column 2) NUMBER EXTRA	SMALL ENTITY RATE($)	SMALL ENTITY FEE($)	OR	OTHER THAN SMALL ENTITY RATE($)	OTHER THAN SMALL ENTITY FEE($)
BASIC FEE (37 CFR 1.16(a), (b), or (c))	N/A	N/A	N/A	70		N/A	
SEARCH FEE (37 CFR 1.16(k), (i), or (m))	N/A	N/A	N/A	300		N/A	
EXAMINATION FEE (37 CFR 1.16(o), (p), or (q))	N/A	N/A	N/A	360		N/A	
TOTAL CLAIMS (37 CFR 1.16(i))	18 minus 20 =	*	x 40 =	0.00	OR		
INDEPENDENT CLAIMS (37 CFR 1.16(h))	2 minus 3 =	*	x 210 =	0.00			
APPLICATION SIZE FEE (37 CFR 1.16(s))	If the specification and drawings exceed 100 sheets of paper, the application size fee due is $310 ($155 for small entity) for each additional 50 sheets or fraction thereof. See 35 U.S.C. 41(a)(1)(G) and 37 CFR 1.16(s).			0.00			
MULTIPLE DEPENDENT CLAIM PRESENT (37 CFR 1.16(j))				0.00			
* If the difference in column 1 is less than zero, enter "0" in column 2.			TOTAL	730		TOTAL	

APPLICATION AS AMENDED - PART II

		(Column 1) CLAIMS REMAINING AFTER AMENDMENT		(Column 2) HIGHEST NUMBER PREVIOUSLY PAID FOR	(Column 3) PRESENT EXTRA	SMALL ENTITY RATE($)	SMALL ENTITY ADDITIONAL FEE($)	OR	OTHER THAN SMALL ENTITY RATE($)	OTHER THAN SMALL ENTITY ADDITIONAL FEE($)
AMENDMENT A	Total (37 CFR 1.16(i))	*	Minus	**	=	x =		OR	x =	
AMENDMENT A	Independent (37 CFR 1.16(h))	*	Minus	***	=	x =		OR	x =	
AMENDMENT A	Application Size Fee (37 CFR 1.16(s))									
AMENDMENT A	FIRST PRESENTATION OF MULTIPLE DEPENDENT CLAIM (37 CFR 1.16(j))							OR		
						TOTAL ADD'L FEE		OR	TOTAL ADD'L FEE	

		(Column 1) CLAIMS REMAINING AFTER AMENDMENT		(Column 2) HIGHEST NUMBER PREVIOUSLY PAID FOR	(Column 3) PRESENT EXTRA	RATE($)	ADDITIONAL FEE($)		RATE($)	ADDITIONAL FEE($)
AMENDMENT B	Total (37 CFR 1.16(i))	*	Minus	**	=	x =		OR	x =	
AMENDMENT B	Independent (37 CFR 1.16(h))	*	Minus	***	=	x =		OR	x =	
AMENDMENT B	Application Size Fee (37 CFR 1.16(s))									
AMENDMENT B	FIRST PRESENTATION OF MULTIPLE DEPENDENT CLAIM (37 CFR 1.16(j))							OR		
						TOTAL ADD'L FEE		OR	TOTAL ADD'L FEE	

* If the entry in column 1 is less than the entry in column 2, write "0" in column 3.
** If the "Highest Number Previously Paid For" IN THIS SPACE is less than 20, enter "20".
*** If the "Highest Number Previously Paid For" IN THIS SPACE is less than 3, enter "3".
The "Highest Number Previously Paid For" (Total or Independent) is the highest found in the appropriate box in column 1.

UNITED STATES PATENT AND TRADEMARK OFFICE

UNITED STATES DEPARTMENT OF COMMERCE
United States Patent and Trademark Office
Address: COMMISSIONER FOR PATENTS
P.O. Box 1450
Alexandria, Virginia 22313-1450
www.uspto.gov

APPLICATION NUMBER	FILING OR 371(C) DATE	FIRST NAMED APPLICANT	ATTY. DOCKET NO./TITLE
14/706,019	05/07/2015	Daniel Kane	15050 XP

CONFIRMATION NO. 1677

PUBLICATION NOTICE

OC000000087127751

25957
LAWRENCE E. LAMBELET JR.
7548 Caprio Dr
Boynton Beach, FL 33472

Title:COMPACT WALLET

Publication No.US-2016-0324283-A1
Publication Date:11/10/2016

NOTICE OF PUBLICATION OF APPLICATION

The above-identified application will be electronically published as a patent application publication pursuant to 37 CFR 1.211, et seq. The patent application publication number and publication date are set forth above.

The publication may be accessed through the USPTO's publically available Searchable Databases via the Internet at www.uspto.gov. The direct link to access the publication is currently http://www.uspto.gov/patft/.

The publication process established by the Office does not provide for mailing a copy of the publication to applicant. A copy of the publication may be obtained from the Office upon payment of the appropriate fee set forth in 37 CFR 1.19(a)(1). Orders for copies of patent application publications are handled by the USPTO's Office of Public Records. The Office of Public Records can be reached by telephone at (703) 308-9726 or (800) 972-6382, by facsimile at (703) 305-8759, by mail addressed to the United States Patent and Trademark Office, Office of Public Records, Alexandria, VA 22313-1450 or via the Internet.

In addition, information on the status of the application, including the mailing date of Office actions and the dates of receipt of correspondence filed in the Office, may also be accessed via the Internet through the Patent Electronic Business Center at www.uspto.gov using the public side of the Patent Application Information and Retrieval (PAIR) system. The direct link to access this status information is currently http://pair.uspto.gov/. Prior to publication, such status information is confidential and may only be obtained by applicant using the private side of PAIR.

Further assistance in electronically accessing the publication, or about PAIR, is available by calling the Patent Electronic Business Center at 1-866-217-9197.

Office of Data Managment, Application Assistance Unit (571) 272-4000, or (571) 272-4200, or 1-888-786-0101

PTO/SB/08a (03-15)
Approved for use through 07/31/2016. OMB 0651-0031
U.S. Patent and Trademark Office; U.S. DEPARTMENT OF COMMERCE

Under the Paperwork Reduction Act of 1995, no persons are required to respond to a collection of information unless it contains a valid OMB control number.

INFORMATION DISCLOSURE STATEMENT BY APPLICANT

(Not for submission under 37 CFR 1.99)

Application Number	14706019
Filing Date	2015-05-07
First Named Inventor	Kane
Art Unit	1677
Examiner Name	REYNOLDS
Attorney Docket Number	15050 XP

U.S.PATENTS Remove

Examiner Initial*	Cite No	Patent Number	Kind Code[1]	Issue Date	Name of Patentee or Applicant of cited Document	Pages,Columns,Lines where Relevant Passages or Relevant Figures Appear
	1					

If you wish to add additional U.S. Patent citation information please click the Add button. Add

U.S.PATENT APPLICATION PUBLICATIONS Remove

Examiner Initial*	Cite No	Publication Number	Kind Code[1]	Publication Date	Name of Patentee or Applicant of cited Document	Pages,Columns,Lines where Relevant Passages or Relevant Figures Appear
	1	20150083289	A1	2015-03-26	Johnson	
	2	20090211062	A1	2009-08-27	Preston-Hall	
	3	20120180917	A1	2012-07-19	Armstrong	

If you wish to add additional U.S. Published Application citation information please click the Add button. Add

FOREIGN PATENT DOCUMENTS Remove

Examiner Initial*	Cite No	Foreign Document Number[3]	Country Code[2] i	Kind Code[4]	Publication Date	Name of Patentee or Applicant of cited Document	Pages,Columns,Lines where Relevant Passages or Relevant Figures Appear	T[5]
	1							

INFORMATION DISCLOSURE STATEMENT BY APPLICANT (Not for submission under 37 CFR 1.99)		
	Application Number	14706019
	Filing Date	2015-05-07
	First Named Inventor	Kane
	Art Unit	1677
	Examiner Name	REYNOLDS
	Attorney Docket Number	15050 XP

If you wish to add additional Foreign Patent Document citation information please click the Add button Add

NON-PATENT LITERATURE DOCUMENTS Remove

Examiner Initials*	Cite No	Include name of the author (in CAPITAL LETTERS), title of the article (when appropriate), title of the item (book, magazine, journal, serial, symposium, catalog, etc), date, pages(s), volume-issue number(s), publisher, city and/or country where published.	T[5]
	1	Ridge Wallet Review' (KICKSTARTER) July 21, 2014, Retrieved from the Internet on July 8, 2016, URL: <http://kickstarter.reviews/ridge-wallet-2/>	
	2	3m Bonding Tapes' (3M) October 30, 2014. Retrieved from the Internet on July 11,2016, URL:<https://web.archive.org/web/20141030183241/http://www.ameyagroup.co.in/pdf/product%	

If you wish to add additional non-patent literature document citation information please click the Add button Add

EXAMINER SIGNATURE

Examiner Signature		Date Considered	

*EXAMINER: Initial if reference considered, whether or not citation is in conformance with MPEP 609. Draw line through a citation if not in conformance and not considered. Include copy of this form with next communication to applicant.

[1] See Kind Codes of USPTO Patent Documents at www.USPTO.GOV or MPEP 901.04. [2] Enter office that issued the document, by the two-letter code (WIPO Standard ST.3). [3] For Japanese patent documents, the indication of the year of the reign of the Emperor must precede the serial number of the patent document. [4] Kind of document by the appropriate symbols as indicated on the document under WIPO Standard ST.16 if possible. [5] Applicant is to place a check mark here if English language translation is attached.

INFORMATION DISCLOSURE STATEMENT BY APPLICANT (Not for submission under 37 CFR 1.99)		
	Application Number	14706019
	Filing Date	2015-05-07
	First Named Inventor	Kane
	Art Unit	1677
	Examiner Name	REYNOLDS
	Attorney Docket Number	15050 XP

CERTIFICATION STATEMENT

Please see 37 CFR 1.97 and 1.98 to make the appropriate selection(s):

That each item of information contained in the information disclosure statement was first cited in any communication from a foreign patent office in a counterpart foreign application not more than three months prior to the filing of the information disclosure statement. See 37 CFR 1.97(e)(1).

OR

☐ That no item of information contained in the information disclosure statement was cited in a communication from a foreign patent office in a counterpart foreign application, and, to the knowledge of the person signing the certification after making reasonable inquiry, no item of information contained in the information disclosure statement was known to any individual designated in 37 CFR 1.56(c) more than three months prior to the filing of the information disclosure statement. See 37 CFR 1.97(e)(2).

See attached certification statement.

☒ The fee set forth in 37 CFR 1.17 (p) has been submitted herewith.

A certification statement is not submitted herewith.

SIGNATURE

A signature of the applicant or representative is required in accordance with CFR 1.33, 10.18. Please see CFR 1.4(d) for the form of the signature.

Signature	/Lawrence Lambelet/	Date (YYYY-MM-DD)	2016-12-08
Name/Print	Lawrence Lambelet	Registration Number	25957

This collection of information is required by 37 CFR 1.97 and 1.98. The information is required to obtain or retain a benefit by the public which is to file (and by the USPTO to process) an application. Confidentiality is governed by 35 U.S.C. 122 and 37 CFR 1.14. This collection is estimated to take 1 hour to complete, including gathering, preparing and submitting the completed application form to the USPTO. Time will vary depending upon the individual case. Any comments on the amount of time you require to complete this form and/or suggestions for reducing this burden, should be sent to the Chief Information Officer, U.S. Patent and Trademark Office, U.S. Department of Commerce, P.O. Box 1450, Alexandria, VA 22313-1450. DO NOT SEND FEES OR COMPLETED FORMS TO THIS ADDRESS. **SEND TO: Commissioner for Patents, P.O. Box 1450, Alexandria, VA 22313-1450.**

Privacy Act Statement

The Privacy Act of 1974 (P.L. 93-579) requires that you be given certain information in connection with your submission of the attached form related to a patent application or patent. Accordingly, pursuant to the requirements of the Act, please be advised that: (1) the general authority for the collection of this information is 35 U.S.C. 2(b)(2); (2) furnishing of the information solicited is voluntary; and (3) the principal purpose for which the information is used by the U.S. Patent and Trademark Office is to process and/or examine your submission related to a patent application or patent. If you do not furnish the requested information, the U.S. Patent and Trademark Office may not be able to process and/or examine your submission, which may result in termination of proceedings or abandonment of the application or expiration of the patent.

The information provided by you in this form will be subject to the following routine uses:

1. The information on this form will be treated confidentially to the extent allowed under the Freedom of Information Act (5 U.S.C. 552) and the Privacy Act (5 U.S.C. 552a). Records from this system of records may be disclosed to the Department of Justice to determine whether the Freedom of Information Act requires disclosure of these record s.

2. A record from this system of records may be disclosed, as a routine use, in the course of presenting evidence to a court, magistrate, or administrative tribunal, including disclosures to opposing counsel in the course of settlement negotiations.

3. A record in this system of records may be disclosed, as a routine use, to a Member of Congress submitting a request involving an individual, to whom the record pertains, when the individual has requested assistance from the Member with respect to the subject matter of the record.

4. A record in this system of records may be disclosed, as a routine use, to a contractor of the Agency having need for the information in order to perform a contract. Recipients of information shall be required to comply with the requirements of the Privacy Act of 1974, as amended, pursuant to 5 U.S.C. 552a(m).

5. A record related to an International Application filed under the Patent Cooperation Treaty in this system of records may be disclosed, as a routine use, to the International Bureau of the World Intellectual Property Organization, pursuant to the Patent Cooperation Treaty.

6. A record in this system of records may be disclosed, as a routine use, to another federal agency for purposes of National Security review (35 U.S.C. 181) and for review pursuant to the Atomic Energy Act (42 U.S.C. 218(c)).

7. A record from this system of records may be disclosed, as a routine use, to the Administrator, General Services, or his/her designee, during an inspection of records conducted by GSA as part of that agency's responsibility to recommend improvements in records management practices and programs, under authority of 44 U.S.C. 2904 and 2906. Such disclosure shall be made in accordance with the GSA regulations governing inspection of records for this purpose, and any other relevant (i.e., GSA or Commerce) directive. Such disclosure shall not be used to make determinations about individuals.

8. A record from this system of records may be disclosed, as a routine use, to the public after either publication of the application pursuant to 35 U.S.C. 122(b) or issuance of a patent pursuant to 35 U.S.C. 151. Further, a record may be disclosed, subject to the limitations of 37 CFR 1.14, as a routine use, to the public if the record was filed in an application which became abandoned or in which the proceedings were terminated and which application is referenced by either a published application, an application open to public inspections or an issued patent.

9. A record from this system of records may be disclosed, as a routine use, to a Federal, State, or local law enforcement agency, if the USPTO becomes aware of a violation or potential violation of law or regulation.

Electronic Acknowledgement Receipt

EFS ID:	27738205
Application Number:	14706019
International Application Number:	
Confirmation Number:	1677
Title of Invention:	COMPACT WALLET
First Named Inventor/Applicant Name:	Daniel Kane
Customer Number:	25957
Filer:	Lawrence Lambelet/Patrick Walsh
Filer Authorized By:	Lawrence Lambelet
Attorney Docket Number:	15050 XP
Receipt Date:	08-DEC-2016
Filing Date:	07-MAY-2015
Time Stamp:	16:10:12
Application Type:	Utility under 35 USC 111(a)

Payment information:

Submitted with Payment	yes
Payment Type	CARD
Payment was successfully received in RAM	$90
RAM confirmation Number	120916INTEFSW16131300
Deposit Account	
Authorized User	

The Director of the USPTO is hereby authorized to charge indicated fees and credit any overpayment as follows:

File Listing:

Document Number	Document Description	File Name	File Size(Bytes)/ Message Digest	Multi Part /.zip	Pages (if appl.)
1	Other Reference-Patent/App/Search documents	ISR_15050-PCT_081916.pdf	1246038 0c438657374ca377bfebc3ef9f2ec1fa9b5d12fc	no	3
Warnings:					
Information:					
2	Other Reference-Patent/App/Search documents	WOISA_15050-PCT_081916.pdf	2461157 a4906286ff869c73393a5b5414235150ef589f2f	no	5
Warnings:					
Information:					
3	Information Disclosure Statement (IDS) Form (SB08)	updated_IDS_15050_signed.pdf	1035255 2cf7eb21ecc86d120115dc925364eec06a6c4cba	no	4
Warnings:					
Information:					
4	Fee Worksheet (SB06)	fee-info.pdf	30388 62bb38dda1f48aeb8197c6c2f73f685ed38f5faa	no	2
Warnings:					
Information:					
		Total Files Size (in bytes):	4772838		

This Acknowledgement Receipt evidences receipt on the noted date by the USPTO of the indicated documents, characterized by the applicant, and including page counts, where applicable. It serves as evidence of receipt similar to a Post Card, as described in MPEP 503.

New Applications Under 35 U.S.C. 111
If a new application is being filed and the application includes the necessary components for a filing date (see 37 CFR 1.53(b)-(d) and MPEP 506), a Filing Receipt (37 CFR 1.54) will be issued in due course and the date shown on this Acknowledgement Receipt will establish the filing date of the application.

National Stage of an International Application under 35 U.S.C. 371
If a timely submission to enter the national stage of an international application is compliant with the conditions of 35 U.S.C. 371 and other applicable requirements a Form PCT/DO/EO/903 indicating acceptance of the application as a national stage submission under 35 U.S.C. 371 will be issued in addition to the Filing Receipt, in due course.

New International Application Filed with the USPTO as a Receiving Office
If a new international application is being filed and the international application includes the necessary components for an international filing date (see PCT Article 11 and MPEP 1810), a Notification of the International Application Number and of the International Filing Date (Form PCT/RO/105) will be issued in due course, subject to prescriptions concerning national security, and the date shown on this Acknowledgement Receipt will establish the international filing date of the application.

PATENT COOPERATION TREATY

From the INTERNATIONAL SEARCHING AUTHORITY

To: Lawrence Lambelet
7548 Caprio Dr.
Boynton Beach, Florida 33472
United States of America

PCT

NOTIFICATION OF TRANSMITTAL OF THE INTERNATIONAL SEARCH REPORT AND THE WRITTEN OPINION OF THE INTERNATIONAL SEARCHING AUTHORITY, OR THE DECLARATION

(PCT Rule 44.1)

	Date of mailing *(day/month/year)* 19 AUG 2016
Applicant's or agent's file reference 15050-PCT-XP	**FOR FURTHER ACTION** See paragraphs 1 and 4 below
International application No. PCT/US16/31472	International filing date *(day/month/year)* 09 May 2016 (09.05.2016)
Applicant Daniel Kane	

1. ☒ The applicant is hereby notified that the international search report and the written opinion of the International Searching Authority have been established and are transmitted herewith.

   Filing of amendments and statement under Article 19:
   The applicant is entitled, if he so wishes, to amend the claims of the international application (see Rule 46):

   When? The time limit for filing such amendments is normally two months from the date of transmittal of the international search report.

   How? Directly to the International Bureau of WIPO preferably through ePCT or on paper to, 34 chemin des Colombettes 1211 Geneva 20, Switzerland, Facsimile No.: +41 22 338 82 70

   For more detailed instructions, see *PCT Applicant's Guide*, International Phase, paragraphs 9.004 – 9.011.

2. ☐ The applicant is hereby notified that no international search report will be established and that the declaration under Article 17(2)(a) to that effect and the written opinion of the International Searching Authority are transmitted herewith.

3. ☐ **With regard to any protest** against payment of (an) additional fee(s) under Rule 40.2, the applicant is notified that:

   ☐ the protest together with the decision thereon has been transmitted to the International Bureau together with any request to forward the texts of both the protest and the decision thereon to the designated Offices.

   ☐ no decision has been made yet on the protest; the applicant will be notified as soon as a decision is made.

4. **Reminders**

   The applicant may **submit comments on an informal basis on the written opinion of the International Searching Authority** to the International Bureau. These comments will be made available to the public after international publication. The International Bureau will send a copy of such comments to all designated Offices unless an international preliminary examination report has been or is to be established.

   Shortly after the expiration of **18 months from the priority date, the international application will be published** by the International Bureau. If the applicant wishes to avoid or postpone publication, a notice of withdrawal of the international application, or of the priority claim, must reach the International Bureau before the completion of the technical preparations for international publication (Rules 90*bis*.1 and 90*bis*.3).

   Within **19 months** from the priority date, but only in respect of some designated Offices, a demand for international preliminary examination must be filed if the applicant wishes to postpone the entry into the national phase **until 30 months** from the priority date (in some Offices even later); otherwise, the applicant must, **within 20 months** from the priority date, perform the prescribed acts for **entry into the national phase** before those designated Offices. In respect of other designated Offices, the time limit of **30 months** (or later) will apply even if no demand is filed within 19 months. For details about the applicable time limits, Office by Office, see www.wipo.int/pct/en/texts/time_limits.html and the *PCT Applicant's Guide*, National Chapters.

   Within **19 months from the priority date, the applicant may request that a supplementary international search be carried out** by a different International Searching Authority that offers this service (Rule 45*bis*.1). The procedure for requesting supplementary international search is described in the *PCT Applicant's Guide*, International Phase, paragraphs 8.006-8.032.

Name and mailing address of the ISA/ Mail Stop PCT, Attn: ISA/US Commissioner for Patents P.O. Box 1450, Alexandria, Virginia 22313-1450 Facsimile No. 571-273-8300	Authorized officer Shane Thomas Telephone No. PCT Helpdesk: 571-272-4300 PCT OSP: 571-272-7774

Form PCT/ISA/220 (July 2014)

PATENT COOPERATION TREATY

PCT

INTERNATIONAL SEARCH REPORT

(PCT Article 18 and Rules 43 and 44)

Applicant's or agent's file reference 15050-PCT-XP	**FOR FURTHER ACTION**	see Form PCT/ISA/220 as well as, where applicable, item 5 below.
International application No. PCT/US16/31472	International filing date *(day/month/year)* 09 May 2016 (09.05.2016)	(Earliest) Priority Date *(day/month/year)* 07 May 2015 (07.05.2015)
Applicant Daniel Kane		

This international search report has been prepared by this International Searching Authority and is transmitted to the applicant according to Article 18. A copy is being transmitted to the International Bureau.

This international search report consists of a total of 2 sheets.

☐ It is also accompanied by a copy of each prior art document cited in this report.

1. **Basis of the report**
   a. With regard to the **language**, the international search was carried out on the basis of:
      ☒ the international application in the language in which it was filed.
      ☐ a translation of the international application into _____ which is the language of a translation furnished for the purposes of international search (Rules 12.3(a) and 23.1(b)).
   b. ☐ This international search report has been established taking into account the **rectification of an obvious mistake** authorized by or notified to this Authority under Rule 91 (Rule 43.6*bis*(a)).
   c. ☐ With regard to any **nucleotide and/or amino acid sequence** disclosed in the international application, see Box No. I.

2. ☐ **Certain claims were found unsearchable** (see Box No. II).

3. ☐ **Unity of invention is lacking** (see Box No. III).

4. With regard to the **title**,
   ☒ the text is approved as submitted by the applicant.
   ☐ the text has been established by this Authority to read as follows:

5. With regard to the **abstract**,
   ☒ the text is approved as submitted by the applicant.
   ☐ the text has been established, according to Rule 38.2, by this Authority as it appears in Box No. IV. The applicant may, within one month from the date of mailing of this international search report, submit comments to this Authority.

6. With regard to the **drawings**,
   a. the figure of the **drawings** to be published with the abstract is Figure No. 1
      ☒ as suggested by the applicant.
      ☐ as selected by this Authority, because the applicant failed to suggest a figure.
      ☐ as selected by this Authority, because this figure better characterizes the invention.
   b. ☐ none of the figures is to be published with the abstract.

INTERNATIONAL SEARCH REPORT

International application No.
PCT/US16/31472

A. CLASSIFICATION OF SUBJECT MATTER
IPC(8) - A45C 1/06 (2016.01)
CPC - A45C 1/06
According to International Patent Classification (IPC) or to both national classification and IPC

B. FIELDS SEARCHED

Minimum documentation searched (classification system followed by classification symbols)
IPC(8) Classifications: A45C 1/00, 1/06 (2016.01)
CPC Classifications: A45C 1/00, 1/06, 2001/028, 2001/067

Documentation searched other than minimum documentation to the extent that such documents are included in the fields searched

Electronic data base consulted during the international search (name of data base and, where practicable, search terms used)
PatSeer (US, EP, WO, JP, DE, GB, CN, FR, KR, ES, AU, IN, CA, INPADOC Data); wallet, low profile, minimalist, compact, rigid, hard, metal, carbon fiber, plate, layer, sheet, screw, fastener, bolt, band, elastic, rubber, elastomer, flex, stretch, adhesive, glue, RFID, protect, shield, pressure sensitive adhesive, woven, fabric

C. DOCUMENTS CONSIDERED TO BE RELEVANT

Category*	Citation of document, with indication, where appropriate, of the relevant passages	Relevant to claim No.
X --- Y	'Ridge Wallet Review' (KICKSTARTER) July 21, 2014. Retrieved from the internet on July 8, 2016. URL: <http://kickstarter.reviews/ridge-wallet-2/>	1-4, 6-9, 11, 12, 14-18 --- 5, 13
X	US 2013/0276943 A1 (HUMN DESIGN LLC) October 24, 2013; figures 1, 2; paragraphs [0033], [0034], [0041]	1, 2
X	US 2015/0083289 A1 (OBSTRUCTURES LLC) March 26, 2015; figures 3, 4; paragraphs [0041], [0042], [0050]	1, 10
Y	'3M Bonding Tapes' (3M) October 30, 2014. Retrieved from the Internet on July 11, 2016. URL: <https://web.archive.org/web/20141030183241/http://www.ameyagroup.co.in/pdf/product%201-2.pdf>	5
Y	US 2009/0211062 A1 (PRESTON-HALL R.) August 27, 2009; figures 12, 13; paragraphs [0019], [0080]	13
A	US 2012/0180917 A1 (ARMSTRONG M. et al.) July 19, 2012; entire document	1-18

☐ Further documents are listed in the continuation of Box C. ☐ See patent family annex.

* Special categories of cited documents:
"A" document defining the general state of the art which is not considered to be of particular relevance
"E" earlier application or patent but published on or after the international filing date
"L" document which may throw doubts on priority claim(s) or which is cited to establish the publication date of another citation or other special reason (as specified)
"O" document referring to an oral disclosure, use, exhibition or other means
"P" document published prior to the international filing date but later than the priority date claimed
"T" later document published after the international filing date or priority date and not in conflict with the application but cited to understand the principle or theory underlying the invention
"X" document of particular relevance; the claimed invention cannot be considered novel or cannot be considered to involve an inventive step when the document is taken alone
"Y" document of particular relevance; the claimed invention cannot be considered to involve an inventive step when the document is combined with one or more other such documents, such combination being obvious to a person skilled in the art
"&" document member of the same patent family

Date of the actual completion of the international search
11 July 2016 (11.07.2016)

Date of mailing of the international search report
19 AUG 2016

Name and mailing address of the ISA/
Mail Stop PCT, Attn: ISA/US, Commissioner for Patents
P.O. Box 1450, Alexandria, Virginia 22313-1450
Facsimile No. 571-273-8300

Authorized officer
Shane Thomas
PCT Helpdesk: 571-272-4300
PCT OSP: 571-272-7774

PATENT COOPERATION TREATY

From the
INTERNATIONAL SEARCHING AUTHORITY

To: Lawrence Lambelet
7548 Caprio Dr.
Boynton Beach, Florida 33472
United States of America

PCT

WRITTEN OPINION OF THE
INTERNATIONAL SEARCHING AUTHORITY

(PCT Rule 43*bis*.1)

Date of mailing *(day/month/year)* 19 AUG 2016

Applicant's or agent's file reference
15050-PCT-XP

FOR FURTHER ACTION
See paragraph 2 below

International application No.	International filing date *(day/month/year)*	Priority date *(day/month/year)*
PCT/US16/31472	09 May 2016 (09.05.2016)	07 May 2015 (07.05.2015)

International Patent Classification (IPC) or both national classification and IPC
IPC(8) - A45C 1/06 (2016.01)
CPC - A45C 1/06

Applicant Daniel Kane

1. This opinion contains indications relating to the following items:

- [x] Box No. I Basis of the opinion
- [ ] Box No. II Priority
- [ ] Box No. III Non-establishment of opinion with regard to novelty, inventive step and industrial applicability
- [ ] Box No. IV Lack of unity of invention
- [x] Box No. V Reasoned statement under Rule 43*bis*.1(a)(i) with regard to novelty, inventive step and industrial applicability; citations and explanations supporting such statement
- [ ] Box No. VI Certain documents cited
- [ ] Box No. VII Certain defects in the international application
- [ ] Box No. VIII Certain observations on the international application

2. **FURTHER ACTION**

If a demand for international preliminary examination is made, this opinion will be considered to be a written opinion of the International Preliminary Examining Authority ("IPEA") except that this does not apply where the applicant chooses an Authority other than this one to be the IPEA and the chosen IPEA has notified the International Bureau under Rule 66.1*bis*(b) that written opinions of this International Searching Authority will not be so considered.

If this opinion is, as provided above, considered to be a written opinion of the IPEA, the applicant is invited to submit to the IPEA a written reply together, where appropriate, with amendments, before the expiration of 3 months from the date of mailing of Form PCT/ISA/220 or before the expiration of 22 months from the priority date, whichever expires later.

For further options, see Form PCT/ISA/220.

Name and mailing address of the ISA/	Date of completion of this opinion	Authorized officer
Mail Stop PCT, Attn: ISA/US Commissioner for Patents P.O. Box 1450, Alexandria, Virginia 22313-1450 Facsimile No. 571-273-8300	11 July 2016 (11.07.2016)	Shane Thomas PCT Helpdesk: 571-272-4300 PCT OSP: 571-272-7774

WRITTEN OPINION OF THE INTERNATIONAL SEARCHING AUTHORITY

International application No.
PCT/US16/31472

Box No. I Basis of this opinion

1. With regard to the **language**, this opinion has been established on the basis of:

   [X] the international application in the language in which it was filed.

   [ ] a translation of the international application into _____ which is the language of a translation furnished for the purposes of international search (Rules 12.3(a) and 23.1(b)).

2. [ ] This opinion has been established taking into account the **rectification of an obvious mistake** authorized by or notified to this Authority under Rule 91 (Rule 43*bis*.1(a)).

3. [ ] With regard to any **nucleotide and/or amino acid sequence** disclosed in the international application, this opinion has been established on the basis of a sequence listing:

   a. [ ] forming part of the international application as filed:

      [ ] in the form of an Annex C/ST.25 text file.

      [ ] on paper or in the form of an image file.

   b. [ ] furnished together with the international application under PCT Rule 13*ter*.1(a) for the purposes of international search only in the form of an Annex C/ST.25 text file.

   c. [ ] furnished subsequent to the international filing date for the purposes of international search only:

      [ ] in the form of an Annex C/ST.25 text file (Rule 13*ter*.1(a)).

      [ ] on paper or in the form of an image file (Rule 13*ter*.1(b) and Administrative Instructions, Section 713).

4. [ ] In addition, in the case that more than one version or copy of a sequence listing has been filed or furnished, the required statements that the information in the subsequent or additional copies is identical to that forming part of the application as filed or does not go beyond the application as filed, as appropriate, were furnished.

5. Additional comments:

WRITTEN OPINION OF THE
INTERNATIONAL SEARCHING AUTHORITY

International application No.
PCT/US16/31472

Box No. V **Reasoned statement under Rule 43*bis*.1(a)(i) with regard to novelty, inventive step and industrial applicability; citations and explanations supporting such statement**

1. Statement

Novelty (N)	Claims	5, 13	YES
	Claims	1-4, 6-12, 14-18	NO
Inventive step (IS)	Claims	NONE	YES
	Claims	1-18	NO
Industrial applicability (IA)	Claims	1-18	YES
	Claims	NONE	NO

2. Citations and explanations:

Claims 1-4, 6-9, 11, 12, and 14-18 lack novelty under PCT Article 33(2) as being anticipated by the online review 'Ridge Wallet Review' (KICKSTARTER).

As to claim 1, Kickstarter discloses a compact wallet, comprising: at least two rigid plates (top plate and bottom plates, each plate include an inner machined plate and an outer plate including the screws as shown; figure 1 of page 1; paragraph 1 of page 2) interposed to sandwich card-like contents there between (for holding cards as shown; figure 3 of page 3; paragraph 2 of page 1; paragraph 1 of page 2), each rigid plate having a longitudinal extent (length of plates shown; figure 1 of page 1; figure 2 of page 3); at least one encircling elastic band (black band shown; figure 2 of page 3; page 3, paragraph 1) interposed with the at least two rigid plates along longitudinal extents thereof (the band is received in the channel of the plates; figure 1 of page 1; figures 2 and 3 of page 3; paragraph 1 of page 2) to bias them inwardly and securely hold the card-like contents (the elastic provides a force to hold the plates together with the cards inside as shown; figure 3 of page 3; paragraph 1 of page 2) while providing elastic volume there between for adding or removing contents (space between that holds cards as shown; figure 3 of page 3; paragraph 1 of page 2); and a channeling means (channel machined into the plates as shown; figure 2 of page 3; paragraph 1 of page 2) configured to minimize the profile of the wallet (by hiding the elastic when assembled as shown; figure 1 of page 1; figures 2 and 3 of page 3) and hold position of the at least one encircling elastic band with respect to each rigid plate (configured to hold the elastic; figures 2 and 3 of page 3; paragraph 1 of page 2) while allowing freedom for the dynamic extension and contraction of the band over the entire running length thereof (the elastic permits the cards to be removed and inserted as shown; figure 3 of page 3; paragraph 1 of page 2; paragraph 1 of page 3); whereby, card-like contents (credit card, bank card, and other valuable cards as shown; figure 3 of page 3; paragraph 1 of page 3) may be carried with minimal silhouette on or with a person (to provide a wallet that is not bulky; paragraph 1 of page 1) while allowing expandable capacity (can hold up to 10 cards; paragraph 3 of page 3) and ready access to individual contents from between the at least two rigid plates (cards are readily accessed as shown; figure 3 of page 3).

As to claim 2, Kickstarter discloses the compact wallet of claim 1, and further discloses wherein the channeling means is a longitudinal groove in a first lamina of a laminate construction of each rigid plate (each inner machined plate (first lamina) of the top and bottom plates (rigid plates) includes a channel as shown; figure 1 of page 2; figure 2 of page 3), the groove slidingly receiving one part of the at least one encircling elastic band (the channel receives the elastic; figure 1 of page 2; figure 2 of page 3; paragraph 1 of page 2).

As to claim 3, Kickstarter discloses the compact wallet of claim 2, and further discloses wherein a second lamina of the laminate construction of each rigid plate (the outer plate (second lamina) of the top and bottom plates (rigid plates); figure 1 of page 1; figure 1 of page 2) is removably attached to the first lamina (via the hex screws; figure 2 of page 3; paragraph 1 of page 2) to hold the at least one elastic band in capture (the elastic can be removed when the outer plate (second lamina) is removed; figures 2-3 of page 3; paragraph 1 of page 2) and provide a smooth surface for glide purposes (the outer plate (second lamina) is shown to provide a smooth surface; figure 1 of page 1).

As to claim 4, Kickstarter discloses the compact wallet of claim 3, and further discloses wherein the second lamina is attached to the first lamina by screws (the outer plates (second lamina) are attached to the inner machined plate (first lamina) using hex screws; figure 1 of page 1; figure 1 of page 2; figures 2-3 of page 3; paragraph 1 of page 2).

As to claim 6, Kickstarter discloses the compact wallet of claim 1, and further discloses wherein each rigid plate is comprised of metal (the inner machined plates (first lamina) of the top and bottom plates (rigid plates) come in aluminum or titanium; paragraph 1 of page 2) for RFID protection (to provide RFID protection; final paragraph of page 3).

As to claim 7, Kickstarter discloses the compact wallet of claim 1, and further discloses wherein each rigid plate is metalized (the inner machined plates (first lamina) of the top and bottom plates (rigid plates) come in aluminum or titanium; paragraph 1 of page 2) for RFID protection (to provide RFID protection; final paragraph of page 3).

As to claim 8, Kickstarter discloses the compact wallet of claim 3, and further discloses wherein at least one of the first or second lamina of each rigid plate is comprised of metal (the inner machined plates (first lamina) of the top and bottom plates (rigid plates) come in aluminum or titanium; paragraph 1 of page 2).

-***-Continued Within the Next Supplemental Box-***-

Supplemental Box

In case the space in any of the preceding boxes is not sufficient.
Continuation of:

-***-Continued from Box V: Citations and Explanations:***-

As to claim 9, Kickstarter discloses the compact wallet of claim 1, and further discloses further comprising a first elastic strap (vertical portion of the black elastic band shown; figure 2 of page 3) positioned over the ends of the at least two rigid plates transverse to the longitudinal extents (positioned at the lower ends of the machined plates of the top and bottom plates (rigid plates); figure 2 of page 3), the positioning functioning to retain the card-like contents from that end (the elastic at the lower end would prevent cards from being removed from that end; figure 1 of page 1; figures 2-3 of page 3).

As to claim 11, Kickstarter discloses the compact wallet of claim 1, and further discloses wherein the card-like contents comprise one or more of a credit card, a driver's license, an ID card, a business card, an affiliation card, a currency bill, a loyalty card, a coupon, a receipt or a personal paper (credit card, bank card, and other valuable cards; figure 3 of page 3; paragraph 1 of page 3).

As to claim 12, Kickstarter discloses the compact wallet of claim 1, and further discloses further comprising aligned finger notches (finger shaped notches in both inner machined plates and the outer plates; figures 2-3 of page 3) through proximal ends of the rigid plates (at the lower end; figures 2-3 of page 3) to expose an edge of the card-like contents for the purpose of pushing the edge to elevate the contents into view through distal ends of the rigid plates (the finger shaped notch is shown to be used to push up the card to view the card at the top end of the top and bottom plates; figure 3 of page 3), said edge providing a fulcrum to lever the proximal ends together for the purpose of fanning the distal ends apart in display of the contents (as the card projects from the top end, the plates at the top end would be fanned apart, and the bottom end would be compressed together by the force of the elastic; figure 3 of page 3; paragraph 1 of page 2).

As to claim 14, Kickstarter discloses a compact wallet, comprising: at least two rigid plates (top plate and bottom plates, each plate include an inner machined plate and an outer plate including the screws as shown; figure 1 of page 1; paragraph 1 of page 2) interposed to sandwich card-like contents there between (for holding cards as shown; figure 3 of page 3; paragraph 2 of page 1; paragraph 1 of page 2), each rigid plate having a groove along a longitudinal extent thereof (longitudinal channels in the machined plates of the top and bottom plates; figure 2 of page 3); at least one encircling elastic band slidingly interposed in the grooves (the black elastic band is received in the channels; figure 1 of page 1; figure 1 of page 2; figures 2-3 of page 3; paragraph 1 of page 2) to bias the at least two rigid plates inwardly and securely hold the card-like contents (the elastic provides a force to hold the plates together with the cards inside as shown; figure 3 of page 3; paragraph 1 of page 2) while providing elastic volume there between for adding or removing contents (space between that holds cards as shown; figure 3 of page 3; paragraph 1 of page 2), the grooves configured to hold position of the at least one encircling elastic band with respect to each rigid plate (the elastic is configured to hold the machined plates of the top and bottom plates; figure 2 of page 3) while allowing freedom for the dynamic extension and contraction of the band over the entire running length thereof (the elastic permits the cards to be removed and inserted as shown; figure 3 of page 3; paragraph 1 of page 2; paragraph 1 of page 3); whereby, card-like contents (credit card, bank card, and other valuable cards as shown; figure 3 of page 3; paragraph 1 of page 3) may be carried with minimal silhouette on or with a person (to provide a wallet that is not bulky; paragraph 1 of page 1) while allowing expandable capacity (can hold up to 10 cards; paragraph 3 of page 3) and ready access to individual contents from between the at least two rigid plates (cards are readily accessed as shown; figure 3 of page 3).

As to claim 15, Kickstarter discloses the compact wallet of claim 14, and further discloses wherein the groove is in a first lamina of a laminate construction of each rigid plate (the channel is in the inner machined plate (first lamina) of the top and bottom plates (rigid plates); figure 1 of page 2; figure 2 of page 3; paragraph 1 of page 2), the groove slidingly receiving one part of the at least one encircling elastic band (the channel receives the elastic; figure 1 of page 2; figure 2 of page 3; paragraph 1 of page 2).

As to claim 16, Kickstarter discloses the compact wallet of claim 15, and further discloses wherein a second lamina of the laminate construction of each rigid plate (the outer plate (second lamina) of the top and bottom plates (rigid plates); figure 1 of page 1; figure 1 of page 2) is removably attached to the first lamina (via the hex screws; figure 2 of page 3; paragraph 1 of page 2) to capture the at least one elastic band (the elastic can be removed when the outer plate (second lamina) is removed; figures 2-3 of page 3; paragraph 1 of page 2) provide a smooth surface for glide (the outer plate (second lamina) is shown to provide a smooth surface; figure 1 of page 1).

As to claim 17, Kickstarter discloses the compact wallet of claim 16, and further discloses wherein the second lamina is attached to the first lamina by screws (the outer plates (second lamina) are attached to the inner machined plate (first lamina) using hex screws; figure 1 of page 1; figure 1 of page 2; figures 2-3 of page 3; paragraph 1 of page 2).

As to claim 18, Kickstarter discloses the compact wallet of claim 1, and further discloses wherein each rigid plate is comprised of metal (the inner machined plates (first lamina) of the top and bottom plates (rigid plates) come in aluminum or titanium; paragraph 1 of page 2) for RFID protection (to provide RFID protection; final paragraph of page 3).

-***-Continued Within the Next Supplemental Box:***-

Supplemental Box

In case the space in any of the preceding boxes is not sufficient.
Continuation of:

-***-Continued from Previous Supplemental Box-***-

Claims 1 and 2 lack novelty under PCT Article 33(2) as being anticipated by US 2013/0276943 A1 (HUMN).

As to claim 1, Humn discloses a compact wallet, comprising: at least two rigid plates (metal plates 12, 14; figures 1, 2; paragraph [0033]) interposed to sandwich card-like contents there between (for holding paper money 22, credit cards 24, driver's license, ID cards between the plates 12 and 14; figures 1, 2; paragraph [0033]), each rigid plate having a longitudinal extent (length as shown page 7 figure); at least one encircling elastic band (16) interposed with the at least two rigid plates along longitudinal extents thereof (as shown; figures 1, 2) to bias them inwardly and securely hold the card-like contents (strap 16 holes the plates 12, 14 together to hold the money 22 and cards 24 there between; figures 1, 2; paragraphs [0033], [0035]) while providing elastic volume there between for adding or removing contents (the strap 16 provides resistance to rotational, vertical and horizontal movement between plates 12 and 14 while allowing easy separation of plates 12 and 14 as shown in figure 2, which would permit insertion and removal of money 22 and cards 24 as shown; figures 1, 2; paragraph [0041]); and a channeling means (25) configured to minimize the profile of the wallet (the straps 16 are received in openings 25, which is shown to minimize the longitudinal profile of the wallet 10; figures 1, 2) and hold position of the at least one encircling elastic band with respect to each rigid plate (openings 25 formed in plates 12 and 14 receive the strap 16; figures 1, 2; paragraph [0034]) while allowing freedom for the dynamic extension and contraction of the band over the entire running length thereof (while the strap 16 is received in the openings 25, the wallet 10 may be pivoted to the open position as shown in figure 2; figures 1, 2; paragraph [0041]); whereby, card-like contents (22, 24; figures 1, 2) may be carried with minimal silhouette on or with a person (money 22 and cards 24 are compressively held between the plates 12, 14, i.e., provides minimal silhouette; figure 1; paragraph [0033]) while allowing expandable capacity and ready access to individual contents from between the at least two rigid plates (the wallet 10, which holds the money 22 and cards 24, can be opened (allowing access) by easy separation of plates 12 and 14 while the strap 16 still provides resistance; figures 1, 2; paragraph [0041]).

As to claim 2, Humn discloses the compact wallet of claim 1, and further discloses wherein the channeling means (25; figures 1, 2) is a longitudinal groove (includes a longitudinal extent as shown) in a first lamina of a laminate construction of each rigid plate (plates 12 and 14 may be made up of multiple carbon fiber sheets 44A-44D; figure 5; paragraph [0055]), the groove slidingly receiving one part of the at least one encircling elastic band (receiving the band 16 in a flexible manner as shown; figures 1, 2).

Claims 1 and 10 lack novelty under PCT Article 33(2) as being anticipated by US 2015/0083289 A1 (OBSTRUCTURES).

As to claim 1, Obstructures discloses a compact wallet, comprising: at least two rigid plates (22, 24; figures 3, 4) interposed to sandwich card-like contents there between (for receiving cash, cards, and other documents; paragraph [0050]), each rigid plate having a longitudinal extent (length as shown; figure 4); at least one encircling elastic band (34) interposed with the at least two rigid plates along longitudinal extents thereof (as shown; figure 6) to bias them inwardly and securely hold the card-like contents (apply tension to hold plates 22 and 24 together; paragraph [0042]) while providing elastic volume there between for adding or removing contents (permit the wallet 20 to be opened by spreading the top of the plates 22 and 24; paragraph [0039]); and a channeling means (channel 14) configured to minimize the profile of the wallet (for holding O-ring 32, thereby reducing the length of the wallet 20; figure 4) and hold position of the at least one encircling elastic band with respect to each rigid plate (channel 14 holds O-ring 34; figure 4) while allowing freedom for the dynamic extension and contraction of the band over the entire running length thereof (permitting the wallet 20 to open by O-ring 34 providing adjustable tension; paragraphs [0041], [0042]); whereby, card-like contents (cards; paragraph [0050]) may be carried with minimal silhouette on or with a person (carried in the wallet 20; paragraph [0050]) while allowing expandable capacity and ready access to individual contents from between the at least two rigid plates (still permitting the wallet 20 to be opened and closed to access the contents of the wallet; paragraph [0052]).

As to claim 10, Obstructures discloses the compact wallet of claim 1, and further discloses further comprising a second elastic strap (32; figures 3, 4) positioned over an outside surface of one of the at least two rigid plates (over the outside of plate 22 as shown; figure 4) to hold additional contents on the outside surface (O-ring 32 is fixed in position, and therefore could be used to hold cash or other contents; figure 4).

Claim 5 lacks an inventive step under PCT Article 33(3) as being obvious over Kickstarter in view of '3M Bonding Tapes' (3M).

As to claim 5, Kickstarter discloses the compact wallet of claim 3. However, Kickstarter does not disclose wherein the second lamina is attached to the first lamina by pressure sensitive adhesive means. 3M discloses wherein the second lamina is attached to the first lamina by pressure sensitive adhesive means (stainless steel plates are bonded to I beams with 3M VHB tapes to replace screws; paragraph 2 of page 4). In order to provide a modern wallet that cuts down on bulk and clutter (Kickstarter, paragraph 1 of page 1), it would have been obvious to one of ordinary skill in the art at the time of the invention to modify Kickstarter's first and second lamina to be attached using 3M's removable pressure sensitive adhesive because, as 3M discloses, the pressure sensitive adhesive can be used to replace rivets or screws for a smooth surface and is also removable and repositionable (3M, paragraph 2 of page 4, paragraph 1 of page 14).

Claim 13 lacks an inventive step under PCT Article 33(3) as being obvious over Kickstarter in view of US 2009/0211062 A1 (PRESTON-HALL).

As to claim 13, Kickstarter discloses the compact wallet of claim 1. However, Kickstarter does not disclose wherein the encircling elastic band is comprised of woven elastic fabric. Preston-Hall discloses wherein the encircling elastic band (90, 92; figures 12, 13; paragraph [0060]) is comprised of woven elastic fabric (woven elastic fabric material; paragraph [0080]). In order to prevent deterioration of the elastic band (Kickstarter, paragraph 2 of page 3), it would have been obvious to one of ordinary skill in the art at the time of the invention to modify Kickstarter's elastic band to comprise Preston-Hall's woven elastic fabric because, as Preston-Hall discloses, the woven elastic fabric band reduces the dimension of the card and currency carrying device in response to longitudinal force and maintains the width dimension in response to tension force to couple a pair of support members (Preston-Hall, paragraph [0019]).

Claims 1-18 have industrial applicability as defined by PCT Article 33(4) because the subject matter can be made or used in industry.

Electronic Patent Application Fee Transmittal

Application Number:	14706019
Filing Date:	07-May-2015
Title of Invention:	COMPACT WALLET
First Named Inventor/Applicant Name:	Daniel Kane
Filer:	Lawrence Lambelet/Patrick Walsh
Attorney Docket Number:	15050 XP

Filed as Small Entity

Filing Fees for Utility under 35 USC 111(a)

Description	Fee Code	Quantity	Amount	Sub-Total in USD($)
Basic Filing:				
Pages:				
Claims:				
Miscellaneous-Filing:				
Petition:				
Patent-Appeals-and-Interference:				
Post-Allowance-and-Post-Issuance:				
Extension-of-Time:				

Description	Fee Code	Quantity	Amount	Sub-Total in USD($)
Miscellaneous:				
SUBMISSION- INFORMATION DISCLOSURE STMT	2806	1	90	90
		Total in USD ($)		**90**

Notice of References Cited	Application/Control No. 14/706,019	Applicant(s)/Patent Under Reexamination KANE, DANIEL	
	Examiner TRI MAI	Art Unit 3781	Page 1 of 1

U.S. PATENT DOCUMENTS

*		Document Number Country Code-Number-Kind Code	Date MM-YYYY	Name	CPC Classification	US Classification
*	A	US-5,952,637 A	09-1999	Strunk; Jeffrey L.	A63F3/0023	16/225
*	B	US-9,125,464 B2	09-2015	Minn; Kenneth	A45C1/06	1/1
*	C	US-1,525,745 A	02-1925	KEEFER CHAUNCEY T	B65D5/6673	206/256
*	D	US-4,477,928 A	10-1984	Graff; Paul	A41F9/025	2/221
*	E	US-6,094,747 A	08-2000	Malick; Jay	A41D13/087	2/159
*	F	US-8,381,360 B2	02-2013	Preston-Hall; Rita	A45C1/08	150/900
*	G	US-D716,043 S	10-2014	Wilk; Daniel		D3/247
*	H	US-5,944,080 A	08-1999	Podwika; Paul P.	A45C1/06	150/137
*	I	US-7,527,081 B2	05-2009	Coates; Jeff D.	A45C1/06	150/147
*	J	US-2,322,461 A	06-1943	FLORENCE MARIANO	A44C5/00	40/118
*	K	US-11,348 A	07-1854	Andrews	G09F3/14	40/665
*	L	US-9,314,074 B2	04-2016	Johnson; Brian R.	A45C1/06	1/1
	M	US-				

FOREIGN PATENT DOCUMENTS

*		Document Number Country Code-Number-Kind Code	Date MM-YYYY	Country	Name	CPC Classification
	N					
	O					
	P					
	Q					
	R					
	S					
	T					

NON-PATENT DOCUMENTS

*		Include as applicable: Author, Title Date, Publisher, Edition or Volume, Pertinent Pages)
	U	
	V	
	W	
	X	

*A copy of this reference is not being furnished with this Office action. (See MPEP § 707.05(a).)
Dates in MM-YYYY format are publication dates. Classifications may be US or foreign.

Doc code: IDS
Doc description: Information Disclosure Statement (IDS) Filed

PTO/SB/08a (03-15)
Approved for use through 07/31/2016. OMB 0651-0031
U.S. Patent and Trademark Office; U.S. DEPARTMENT OF COMMERCE
Under the Paperwork Reduction Act of 1995, no persons are required to respond to a collection of information unless it contains a valid OMB control number.

INFORMATION DISCLOSURE STATEMENT BY APPLICANT

(Not for submission under 37 CFR 1.99)

Application Number	14706019
Filing Date	2015-05-07
First Named Inventor	Kane
Art Unit	1677
Examiner Name	REYNOLDS
Attorney Docket Number	15050 XP

U.S.PATENTS Remove

Examiner Initial*	Cite No	Patent Number	Kind Code[1]	Issue Date	Name of Patentee or Applicant of cited Document	Pages,Columns,Lines where Relevant Passages or Relevant Figures Appear
	1					

If you wish to add additional U.S. Patent citation information please click the Add button. Add

U.S.PATENT APPLICATION PUBLICATIONS Remove

Examiner Initial*	Cite No	Publication Number	Kind Code[1]	Publication Date	Name of Patentee or Applicant of cited Document	Pages,Columns,Lines where Relevant Passages or Relevant Figures Appear
	1	20150083289	A1	2015-03-26	Johnson	
	2	20090211062	A1	2009-08-27	Preston-Hall	
	3	20120180917	A1	2012-07-19	Armstrong	

If you wish to add additional U.S. Published Application citation information please click the Add button. Add

FOREIGN PATENT DOCUMENTS Remove

Examiner Initial*	Cite No	Foreign Document Number[3]	Country Code[2] i	Kind Code[4]	Publication Date	Name of Patentee or Applicant of cited Document	Pages,Columns,Lines where Relevant Passages or Relevant Figures Appear	T[5]
	1							

ALL REFERENCES CONSIDERED EXCEPT WHERE LINED THROUGH. /T.M.M/

INFORMATION DISCLOSURE STATEMENT BY APPLICANT

(Not for submission under 37 CFR 1.99)

Application Number	14706019
Filing Date	2015-05-07
First Named Inventor	Kane
Art Unit	1677
Examiner Name	REYNOLDS
Attorney Docket Number	15050 XP

If you wish to add additional Foreign Patent Document citation information please click the Add button Add

NON-PATENT LITERATURE DOCUMENTS Remove

Examiner Initials*	Cite No	Include name of the author (in CAPITAL LETTERS), title of the article (when appropriate), title of the item (book, magazine, journal, serial, symposium, catalog, etc), date, pages(s), volume-issue number(s), publisher, city and/or country where published.	T[5]
/T.M.M/	1	Ridge Wallet Review' (KICKSTARTER) July 21, 2014, Retrieved from the Internet on July 8, 2016, URL: <http://kickstarter.reviews/ridge-wallet-2/>	
/T.M.M/	2	3m Bonding Tapes' (3M) October 30, 2014. Retrieved from the Internet on July 11,2016, URL:<https://web.archive.org/web/20141030183241/http://www.ameyagroup.co.in/pdf/product%	

If you wish to add additional non-patent literature document citation information please click the Add button Add

EXAMINER SIGNATURE

Examiner Signature	/TRI M MAI/	Date Considered	07/27/2017

*EXAMINER: Initial if reference considered, whether or not citation is in conformance with MPEP 609. Draw line through a citation if not in conformance and not considered. Include copy of this form with next communication to applicant.

[1] See Kind Codes of USPTO Patent Documents at www.USPTO.GOV or MPEP 901.04. [2] Enter office that issued the document, by the two-letter code (WIPO Standard ST.3). [3] For Japanese patent documents, the indication of the year of the reign of the Emperor must precede the serial number of the patent document. [4] Kind of document by the appropriate symbols as indicated on the document under WIPO Standard ST.16 if possible. [5] Applicant is to place a check mark here if English language translation is attached.

ALL REFERENCES CONSIDERED EXCEPT WHERE LINED THROUGH. /T.M.M/

INFORMATION DISCLOSURE STATEMENT BY APPLICANT

(Not for submission under 37 CFR 1.99)

Application Number	14706019
Filing Date	2015-05-07
First Named Inventor	Kane
Art Unit	1677
Examiner Name	REYNOLDS
Attorney Docket Number	15050 XP

CERTIFICATION STATEMENT

Please see 37 CFR 1.97 and 1.98 to make the appropriate selection(s):

That each item of information contained in the information disclosure statement was first cited in any communication from a foreign patent office in a counterpart foreign application not more than three months prior to the filing of the information disclosure statement. See 37 CFR 1.97(e)(1).

OR

☐ That no item of information contained in the information disclosure statement was cited in a communication from a foreign patent office in a counterpart foreign application, and, to the knowledge of the person signing the certification after making reasonable inquiry, no item of information contained in the information disclosure statement was known to any individual designated in 37 CFR 1.56(c) more than three months prior to the filing of the information disclosure statement. See 37 CFR 1.97(e)(2).

See attached certification statement.

☒ The fee set forth in 37 CFR 1.17 (p) has been submitted herewith.

A certification statement is not submitted herewith.

SIGNATURE

A signature of the applicant or representative is required in accordance with CFR 1.33, 10.18. Please see CFR 1.4(d) for the form of the signature.

Signature	/Lawrence Lambelet/	Date (YYYY-MM-DD)	2016-12-08
Name/Print	Lawrence Lambelet	Registration Number	25957

This collection of information is required by 37 CFR 1.97 and 1.98. The information is required to obtain or retain a benefit by the public which is to file (and by the USPTO to process) an application. Confidentiality is governed by 35 U.S.C. 122 and 37 CFR 1.14. This collection is estimated to take 1 hour to complete, including gathering, preparing and submitting the completed application form to the USPTO. Time will vary depending upon the individual case. Any comments on the amount of time you require to complete this form and/or suggestions for reducing this burden, should be sent to the Chief Information Officer, U.S. Patent and Trademark Office, U.S. Department of Commerce, P.O. Box 1450, Alexandria, VA 22313-1450. DO NOT SEND FEES OR COMPLETED FORMS TO THIS ADDRESS. **SEND TO: Commissioner for Patents, P.O. Box 1450, Alexandria, VA 22313-1450.**

ALL REFERENCES CONSIDERED EXCEPT WHERE LINED THROUGH. /T.M.M/

Privacy Act Statement

The Privacy Act of 1974 (P.L. 93-579) requires that you be given certain information in connection with your submission of the attached form related to a patent application or patent. Accordingly, pursuant to the requirements of the Act, please be advised that: (1) the general authority for the collection of this information is 35 U.S.C. 2(b)(2); (2) furnishing of the information solicited is voluntary; and (3) the principal purpose for which the information is used by the U.S. Patent and Trademark Office is to process and/or examine your submission related to a patent application or patent. If you do not furnish the requested information, the U.S. Patent and Trademark Office may not be able to process and/or examine your submission, which may result in termination of proceedings or abandonment of the application or expiration of the patent.

The information provided by you in this form will be subject to the following routine uses:

1. The information on this form will be treated confidentially to the extent allowed under the Freedom of Information Act (5 U.S.C. 552) and the Privacy Act (5 U.S.C. 552a). Records from this system of records may be disclosed to the Department of Justice to determine whether the Freedom of Information Act requires disclosure of these record s.

2. A record from this system of records may be disclosed, as a routine use, in the course of presenting evidence to a court, magistrate, or administrative tribunal, including disclosures to opposing counsel in the course of settlement negotiations.

3. A record in this system of records may be disclosed, as a routine use, to a Member of Congress submitting a request involving an individual, to whom the record pertains, when the individual has requested assistance from the Member with respect to the subject matter of the record.

4. A record in this system of records may be disclosed, as a routine use, to a contractor of the Agency having need for the information in order to perform a contract. Recipients of information shall be required to comply with the requirements of the Privacy Act of 1974, as amended, pursuant to 5 U.S.C. 552a(m).

5. A record related to an International Application filed under the Patent Cooperation Treaty in this system of records may be disclosed, as a routine use, to the International Bureau of the World Intellectual Property Organization, pursuant to the Patent Cooperation Treaty.

6. A record in this system of records may be disclosed, as a routine use, to another federal agency for purposes of National Security review (35 U.S.C. 181) and for review pursuant to the Atomic Energy Act (42 U.S.C. 218(c)).

7. A record from this system of records may be disclosed, as a routine use, to the Administrator, General Services, or his/her designee, during an inspection of records conducted by GSA as part of that agency's responsibility to recommend improvements in records management practices and programs, under authority of 44 U.S.C. 2904 and 2906. Such disclosure shall be made in accordance with the GSA regulations governing inspection of records for this purpose, and any other relevant (i.e., GSA or Commerce) directive. Such disclosure shall not be used to make determinations about individuals.

8. A record from this system of records may be disclosed, as a routine use, to the public after either publication of the application pursuant to 35 U.S.C. 122(b) or issuance of a patent pursuant to 35 U.S.C. 151. Further, a record may be disclosed, subject to the limitations of 37 CFR 1.14, as a routine use, to the public if the record was filed in an application which became abandoned or in which the proceedings were terminated and which application is referenced by either a published application, an application open to public inspections or an issued patent.

9. A record from this system of records may be disclosed, as a routine use, to a Federal, State, or local law enforcement agency, if the USPTO becomes aware of a violation or potential violation of law or regulation.

Doc code: IDS
Doc description: Information Disclosure Statement (IDS) Filed

PTO/SB/08a (01-10)
Approved for use through 07/31/2012. OMB 0651-0031
U.S. Patent and Trademark Office; U.S. DEPARTMENT OF COMMERCE
Under the Paperwork Reduction Act of 1995, no persons are required to respond to a collection of information unless it contains a valid OMB control number.

INFORMATION DISCLOSURE STATEMENT BY APPLICANT (Not for submission under 37 CFR 1.99)		
	Application Number	
	Filing Date	
	First Named Inventor	Kane
	Art Unit	
	Examiner Name	
	Attorney Docket Number	15050 XP

U.S.PATENTS						Remove
Examiner Initial*	Cite No	Patent Number	Kind Code[1]	Issue Date	Name of Patentee or Applicant of cited Document	Pages,Columns,Lines where Relevant Passages or Relevant Figures Appear
	1	7810683	B2	2010-10-12	Chan	
	2	5077869		1992-01-07	Haase	
If you wish to add additional U.S. Patent citation information please click the Add button.						Add

U.S.PATENT APPLICATION PUBLICATIONS						Remove
Examiner Initial*	Cite No	Publication Number	Kind Code[1]	Publication Date	Name of Patentee or Applicant of cited Document	Pages,Columns,Lines where Relevant Passages or Relevant Figures Appear
	1	20140233181	A1	2014-08-21	Harms	
	2	20130276943	A1	2013-10-24	Minn	
	3	20090094795	A1	2009-04-16	Lazarus	
	4	20100139049	A1	2010-06-10	Glickfield	

ALL REFERENCES CONSIDERED EXCEPT WHERE LINED THROUGH. /T.M.M/

INFORMATION DISCLOSURE STATEMENT BY APPLICANT (Not for submission under 37 CFR 1.99)		
	Application Number	
	Filing Date	
	First Named Inventor	Kane
	Art Unit	
	Examiner Name	
	Attorney Docket Number	15050 XP

	5	20050023157	A1	2005-02-03	Logan		

If you wish to add additional U.S. Published Application citation information please click the Add button. Add

FOREIGN PATENT DOCUMENTS Remove

Examiner Initial*	Cite No	Foreign Document Number[3]	Country Code[2] ¡	Kind Code[4]	Publication Date	Name of Patentee or Applicant of cited Document	Pages,Columns,Lines where Relevant Passages or Relevant Figures Appear	T[5]
	1							☐

If you wish to add additional Foreign Patent Document citation information please click the Add button Add

NON-PATENT LITERATURE DOCUMENTS Remove

Examiner Initials*	Cite No	Include name of the author (in CAPITAL LETTERS), title of the article (when appropriate), title of the item (book, magazine, journal, serial, symposium, catalog, etc), date, pages(s), volume-issue number(s), publisher, city and/or country where published.	T[5]
	1		☐

If you wish to add additional non-patent literature document citation information please click the Add button Add

EXAMINER SIGNATURE

Examiner Signature	/TRI M MAI/	Date Considered	07/27/2017

*EXAMINER: Initial if reference considered, whether or not citation is in conformance with MPEP 609. Draw line through a citation if not in conformance and not considered. Include copy of this form with next communication to applicant.

[1] See Kind Codes of USPTO Patent Documents at www.USPTO.GOV or MPEP 901.04. [2] Enter office that issued the document, by the two-letter code (WIPO Standard ST.3). [3] For Japanese patent documents, the indication of the year of the reign of the Emperor must precede the serial number of the patent document. [4] Kind of document by the appropriate symbols as indicated on the document under WIPO Standard ST.16 if possible. [5] Applicant is to place a check mark here if English language translation is attached.

ALL REFERENCES CONSIDERED EXCEPT WHERE LINED THROUGH. /T.M.M/

INFORMATION DISCLOSURE STATEMENT BY APPLICANT (Not for submission under 37 CFR 1.99)		
	Application Number	
	Filing Date	
	First Named Inventor	Kane
	Art Unit	
	Examiner Name	
	Attorney Docket Number	15050 XP

CERTIFICATION STATEMENT

Please see 37 CFR 1.97 and 1.98 to make the appropriate selection(s):

☐ That each item of information contained in the information disclosure statement was first cited in any communication from a foreign patent office in a counterpart foreign application not more than three months prior to the filing of the information disclosure statement. See 37 CFR 1.97(e)(1).

OR

☐ That no item of information contained in the information disclosure statement was cited in a communication from a foreign patent office in a counterpart foreign application, and, to the knowledge of the person signing the certification after making reasonable inquiry, no item of information contained in the information disclosure statement was known to any individual designated in 37 CFR 1.56(c) more than three months prior to the filing of the information disclosure statement. See 37 CFR 1.97(e)(2).

☐ See attached certification statement.

☐ The fee set forth in 37 CFR 1.17 (p) has been submitted herewith.

☒ A certification statement is not submitted herewith.

SIGNATURE

A signature of the applicant or representative is required in accordance with CFR 1.33, 10.18. Please see CFR 1.4(d) for the form of the signature.

Signature	/Lawrence Lambelet/	Date (YYYY-MM-DD)	2015-05-06
Name/Print	Lawrence Lambelet	Registration Number	38530

This collection of information is required by 37 CFR 1.97 and 1.98. The information is required to obtain or retain a benefit by the public which is to file (and by the USPTO to process) an application. Confidentiality is governed by 35 U.S.C. 122 and 37 CFR 1.14. This collection is estimated to take 1 hour to complete, including gathering, preparing and submitting the completed application form to the USPTO. Time will vary depending upon the individual case. Any comments on the amount of time you require to complete this form and/or suggestions for reducing this burden, should be sent to the Chief Information Officer, U.S. Patent and Trademark Office, U.S. Department of Commerce, P.O. Box 1450, Alexandria, VA 22313-1450. DO NOT SEND FEES OR COMPLETED FORMS TO THIS ADDRESS. **SEND TO: Commissioner for Patents, P.O. Box 1450, Alexandria, VA 22313-1450.**

ALL REFERENCES CONSIDERED EXCEPT WHERE LINED THROUGH. /T.M.M/

Privacy Act Statement

The Privacy Act of 1974 (P.L. 93-579) requires that you be given certain information in connection with your submission of the attached form related to a patent application or patent. Accordingly, pursuant to the requirements of the Act, please be advised that: (1) the general authority for the collection of this information is 35 U.S.C. 2(b)(2); (2) furnishing of the information solicited is voluntary; and (3) the principal purpose for which the information is used by the U.S. Patent and Trademark Office is to process and/or examine your submission related to a patent application or patent. If you do not furnish the requested information, the U.S. Patent and Trademark Office may not be able to process and/or examine your submission, which may result in termination of proceedings or abandonment of the application or expiration of the patent.

The information provided by you in this form will be subject to the following routine uses:

1. The information on this form will be treated confidentially to the extent allowed under the Freedom of Information Act (5 U.S.C. 552) and the Privacy Act (5 U.S.C. 552a). Records from this system of records may be disclosed to the Department of Justice to determine whether the Freedom of Information Act requires disclosure of these record s.

2. A record from this system of records may be disclosed, as a routine use, in the course of presenting evidence to a court, magistrate, or administrative tribunal, including disclosures to opposing counsel in the course of settlement negotiations.

3. A record in this system of records may be disclosed, as a routine use, to a Member of Congress submitting a request involving an individual, to whom the record pertains, when the individual has requested assistance from the Member with respect to the subject matter of the record.

4. A record in this system of records may be disclosed, as a routine use, to a contractor of the Agency having need for the information in order to perform a contract. Recipients of information shall be required to comply with the requirements of the Privacy Act of 1974, as amended, pursuant to 5 U.S.C. 552a(m).

5. A record related to an International Application filed under the Patent Cooperation Treaty in this system of records may be disclosed, as a routine use, to the International Bureau of the World Intellectual Property Organization, pursuant to the Patent Cooperation Treaty.

6. A record in this system of records may be disclosed, as a routine use, to another federal agency for purposes of National Security review (35 U.S.C. 181) and for review pursuant to the Atomic Energy Act (42 U.S.C. 218(c)).

7. A record from this system of records may be disclosed, as a routine use, to the Administrator, General Services, or his/her designee, during an inspection of records conducted by GSA as part of that agency's responsibility to recommend improvements in records management practices and programs, under authority of 44 U.S.C. 2904 and 2906. Such disclosure shall be made in accordance with the GSA regulations governing inspection of records for this purpose, and any other relevant (i.e., GSA or Commerce) directive. Such disclosure shall not be used to make determinations about individuals.

8. A record from this system of records may be disclosed, as a routine use, to the public after either publication of the application pursuant to 35 U.S.C. 122(b) or issuance of a patent pursuant to 35 U.S.C. 151. Further, a record may be disclosed, subject to the limitations of 37 CFR 1.14, as a routine use, to the public if the record was filed in an application which became abandoned or in which the proceedings were terminated and which application is referenced by either a published application, an application open to public inspections or an issued patent.

9. A record from this system of records may be disclosed, as a routine use, to a Federal, State, or local law enforcement agency, if the USPTO becomes aware of a violation or potential violation of law or regulation.

ALL REFERENCES CONSIDERED EXCEPT WHERE LINED THROUGH. /T.M.M/

UNITED STATES PATENT AND TRADEMARK OFFICE

UNITED STATES DEPARTMENT OF COMMERCE
United States Patent and Trademark Office
Address: COMMISSIONER FOR PATENTS
P.O. Box 1450
Alexandria, Virginia 22313-1450
www.uspto.gov

APPLICATION NO.	FILING DATE	FIRST NAMED INVENTOR	ATTORNEY DOCKET NO.	CONFIRMATION NO.
14/706,019	05/07/2015	Daniel Kane	15050 XP	1677

25957 7590 08/07/2017
LAWRENCE E. LAMBELET JR.
7548 Caprio Dr
Boynton Beach, FL 33472

EXAMINER
MAI, TRI M

ART UNIT	PAPER NUMBER
3781	

NOTIFICATION DATE	DELIVERY MODE
08/07/2017	ELECTRONIC

Please find below and/or attached an Office communication concerning this application or proceeding.

The time period for reply, if any, is set in the attached communication.

Notice of the Office communication was sent electronically on above-indicated "Notification Date" to the following e-mail address(es):

agent@xpertpatents.com
dockets@walsh-ip.com
pwalsh@walsh-ip.com

Office Action Summary	Application No. 14/706,019	Applicant(s) KANE, DANIEL	
	Examiner TRI MAI	Art Unit 3781	AIA (First Inventor to File) Status Yes

-- The MAILING DATE of this communication appears on the cover sheet with the correspondence address --

Period for Reply

A SHORTENED STATUTORY PERIOD FOR REPLY IS SET TO EXPIRE 3 MONTHS FROM THE MAILING DATE OF THIS COMMUNICATION.

- Extensions of time may be available under the provisions of 37 CFR 1.136(a). In no event, however, may a reply be timely filed after SIX (6) MONTHS from the mailing date of this communication.
- If NO period for reply is specified above, the maximum statutory period will apply and will expire SIX (6) MONTHS from the mailing date of this communication.
- Failure to reply within the set or extended period for reply will, by statute, cause the application to become ABANDONED (35 U.S.C. § 133). Any reply received by the Office later than three months after the mailing date of this communication, even if timely filed, may reduce any earned patent term adjustment. See 37 CFR 1.704(b).

Status

1)☐ Responsive to communication(s) filed on _____.

☐ A declaration(s)/affidavit(s) under **37 CFR 1.130(b)** was/were filed on _____.

2a)☐ This action is **FINAL**. 2b)☒ This action is non-final.

3)☐ An election was made by the applicant in response to a restriction requirement set forth during the interview on _____; the restriction requirement and election have been incorporated into this action.

4)☐ Since this application is in condition for allowance except for formal matters, prosecution as to the merits is closed in accordance with the practice under *Ex parte Quayle*, 1935 C.D. 11, 453 O.G. 213.

Disposition of Claims*

5)☒ Claim(s) 1-18 is/are pending in the application.

5a) Of the above claim(s) _____ is/are withdrawn from consideration.

6)☐ Claim(s) _____ is/are allowed.

7)☒ Claim(s) 1-18 is/are rejected.

8)☐ Claim(s) _____ is/are objected to.

9)☐ Claim(s) _____ are subject to restriction and/or election requirement.

* If any claims have been determined allowable, you may be eligible to benefit from the **Patent Prosecution Highway** program at a participating intellectual property office for the corresponding application. For more information, please see http://www.uspto.gov/patents/init_events/pph/index.jsp or send an inquiry to PPHfeedback@uspto.gov.

Application Papers

10)☐ The specification is objected to by the Examiner.

11)☐ The drawing(s) filed on _____ is/are: a)☐ accepted or b)☐ objected to by the Examiner.

Applicant may not request that any objection to the drawing(s) be held in abeyance. See 37 CFR 1.85(a).

Replacement drawing sheet(s) including the correction is required if the drawing(s) is objected to. See 37 CFR 1.121(d).

Priority under 35 U.S.C. § 119

12)☐ Acknowledgment is made of a claim for foreign priority under 35 U.S.C. § 119(a)-(d) or (f).

Certified copies:

a)☐ All b)☐ Some** c)☐ None of the:

1.☐ Certified copies of the priority documents have been received.

2.☐ Certified copies of the priority documents have been received in Application No. _____.

3.☐ Copies of the certified copies of the priority documents have been received in this National Stage application from the International Bureau (PCT Rule 17.2(a)).

** See the attached detailed Office action for a list of the certified copies not received.

Attachment(s)

1) ☒ Notice of References Cited (PTO-892)

2) ☒ Information Disclosure Statement(s) (PTO/SB/08a and/or PTO/SB/08b) Paper No(s)/Mail Date _____.

3) ☐ Interview Summary (PTO-413) Paper No(s)/Mail Date. _____ .

4) ☐ Other: _____.

1. The present application, filed on or after March 16, 2013, is being examined under the first inventor to file provisions of the AIA.

2. Claims 1, 2, 10, 11, and 14 are rejected under 35 U.S.C. 103 as being unpatentable over Strunk (5952637) in view of Minn et al. (9125464) or Keefer (1525745). Strunk teaches a device with two rigid plates each having a longitudinal extend, a channeling means, at least an encircling elastic band allowing freedom. Strunk meets all claimed limitations except for the band extend along longitudinal extents. It would have been obvious to one of ordinary skill in the art to provide the elastic bands 20a extending on the longitudinal direction as taught by either Minn or Keefer to provide the desired orientation of support.

Regarding claim 11, note the various devices claim 11 do not read over the cards in Strunk.

3. Claim 13 is rejected under 35 U.S.C. 103 as being unpatentable over the Strunk rejection as set forth above, and further in view of Graff (4477928) or Malick (6094747) or Preston-Hall (8381360). It would have been obvious to one of ordinary skill in the art to provide woven elastic as taught by Graff or Malick or Preston-Hall to provide the desired material for the elastic bands.

4. Claims 1-2, and 11 are rejected under 35 U.S.C. 103 as being unpatentable over Wilk (D716043) in view of Podwika (5944080). Wilk teaches a device with two rigid plates each having a longitudinal extend, a channeling means being the notches at the two edges, at least an encircling elastic band allowing freedom. From the design, Wilk does not mention of the band

of elastic. It would have been obvious to one of ordinary skill in the art to provide the band of elastic as taught by Podwika to enable the device operational.

It is noted that "channeling means" is not a 112, 6th recitation since the specification defines it as open ended definition, e.g., paragraphs 11, 30. Therefore the notches at the two ends allowing the band of elastic moving freely on a longitudinal direction would meet the claimed channeling means

In the alternative, Podwika teaches that it is known in the art to provide channeling means of grooves. It would have been obvious to one of ordinary skill in the art to provide channeling means as taught by Podwika to keep the device thin.

5. Claim 13 is rejected under 35 U.S.C. 103 as being unpatentable over the Wilk rejection as set forth above, and further in view of Graff (4477928) or Malick (6094747) or Preston-Hall (8381360). It would have been obvious to one of ordinary skill in the art to provide woven elastic as taught by Graff or Malick or Preston-Hall to provide the desired material for the elastic bands.

6. Claims 6-7 are rejected under 35 U.S.C. 103 as being unpatentable over the Wilk rejection as set forth above, and further in view of Minn et al. (9125464) or Johnson et al. (9314074), It would have been obvious to one of ordinary skill in the art to provide the device of metal for added protection.

7. Claims 1-11, and 13-18 are rejected under 35 U.S.C. 102(a)(1) as being anticipated by Wilk (D716043) in view of Coates et al. (7527081), and further in view of Podwika (5944080). Wilk teaches a device as set forth above. Wilk does not mention of the band of elastic. It would

have been obvious to one of ordinary skill in the art to provide the band of elastic as taught by Contes to enable the device operational. Contes also teaches the panels each comprising of two portions 24a/24b and the elastic portion is positioned between recesses of the two rigid portions in fig. 13. Therefore, it would have been obvious to one of ordinary skill in the art to provide each rigid member of Wilk of two portions and the elastic portion is positioned between recesses of the two rigid portions as taught by Contes to provide the desired construction for the rigid panel and to minimize the thickness. Also Podwika teaches that providing attachment as optional (see abstract). Therefore, to provide the two rigid portions without other attachment means to keep the device freely moving as taught by Podwika would have been obvious.

Regarding claims 5, Contes teaches other fasteners, it would have been obvious to one of ordinary skill in the art to provide screws or adhesive attaching the two plates would have been obvious.

Regarding claims 6-8, it would have been obvious to one of ordinary skill in the art to provide the panel of metal as taught by Contes to provide added protection.

Regarding claim 9, Contes teaches that it is known in the art to provide another elastic strap over the ends transverse the longitudinal extends at 13 in addition to the two straps at 12. Therefore, it would have been obvious to one of ordinary skill in the art to provide an elastic strap at ends transverse the longitudinal extends as taught by Contes would have been obvious to prevent the card from falling out.

8. Claims 1, 2, and 14, are rejected under 35 U.S.C. 102(a)(1) as being anticipated by Mariano (2322461) . Mariano teaches a device being an endless cord 2' with two rigid panels

each having a longitudinal extend. Mariano teaches that portions 1, 3, and 4 are strung and movable.

9. Claims 1-8, and 14-18 are rejected under 35 U.S.C. 103 as being unpatentable over Mariano (2322461) in view of Andrews (11348). In the alternative, Andrews teaches the panel can be made with two attached portions with recesses as shown in Fig. 2. It would have been obvious to one of ordinary skill in the art to provide two plates (a, b) with a longitudinal recess to provide the desired attachment means.

Regarding claims 4-5 and 17, it would have been obvious to one of ordinary skill in the art to provide screws or adhesive attaching the two plates would have been obvious.

10. Claim 11 is rejected under 35 U.S.C. 103 as being unpatentable over the Mariano rejections, as set forth above, and further in view of Odishoo (6205622). It would have been obvious to one of ordinary skill in the art to use the bracelet as a holder as taught by Odishoo to provide an alternative use.

11. Claims 1, 6-7, 11, 12, 14, and 18 are rejected under 35 U.S.C. 102(a)(1) as being anticipated by Minn (9125464). Minn teaches Wilk teaches a device with two rigid plates each having a longitudinal extend, a channeling means being the notches at the two edges, and an encircling elastic band allowing freedom. It is noted that "channeling means" is not a 112, 6th recitation since the specification defines it as open ended definition, e.g., paragraphs 11, 30. Therefore the notches at the two ends allowing the band of elastic moving freely on a longitudinal direction would meet the claimed channeling means

12. Claims 1-11, and 13-18 are rejected under 35 U.S.C. 103 as being unpatentable over Minn in view of Coates et al. (7527081), and further in view of Podwika (5944080). In the alternative, Contes also teaches the panels each comprising of two portions 24a/24b and the elastic portion is positioned between recesses of the two rigid portions in fig. 13. Therefore, it would have been obvious to one of ordinary skill in the art to provide each rigid member of Minn of two portions and the elastic portion is positioned between recesses of the two rigid portions as taught by Contes to provide the desired construction for the rigid panel and to minimize the thickness. Also Podwika teaches that providing attachment as optional (see abstract). Therefore, to provide the two rigid portions without other attachment means to keep the device freely moving as taught by Podwika would have been obvious.

13. Any inquiry concerning this communication or earlier communications from the examiner should be directed to TRI MAI whose telephone number is (571)272-4541. The examiner can normally be reached on M-F 7 am - 4:00 pm.

Examiner interviews are available via telephone, in-person, and video conferencing using a USPTO supplied web-based collaboration tool. To schedule an interview, applicant is encouraged to use the USPTO Automated Interview Request (AIR) at http://www.uspto.gov/interviewpractice.

If attempts to reach the examiner by telephone are unsuccessful, the examiner's supervisor, Fenn Mathew can be reached on 571-272-4978. The fax phone number for the organization where this application or proceeding is assigned is 571-273-8300.

Information regarding the status of an application may be obtained from the Patent Application Information Retrieval (PAIR) system. Status information for published applications may be obtained from either Private PAIR or Public PAIR. Status information for unpublished applications is available through Private PAIR only. For more information about the PAIR system, see http://pair-direct.uspto.gov. Should you have questions on access to the Private PAIR system, contact the Electronic Business Center (EBC) at 866-217-9197 (toll-free). If you would like assistance from a USPTO Customer Service Representative or access to the automated information system, call 800-786-9199 (IN USA OR CANADA) or 571-272-1000.

/TRI MAI/
Primary Examiner, Art Unit 3781

Search Notes	Application/Control No.	Applicant(s)/Patent Under Reexamination
	14706019	KANE, DANIEL
	Examiner	**Art Unit**
	TRI MAI	3781

CPC- SEARCHED

Symbol	Date	Examiner
a45c 1/06, 1/08, 11/182, 13/185, 2001/083, 2011/186	7/31/2017	TM

CPC COMBINATION SETS - SEARCHED

Symbol	Date	Examiner

US CLASSIFICATION SEARCHED

Class	Subclass	Date	Examiner

* See search history printout included with this form or the SEARCH NOTES box below to determine the scope of the search.

SEARCH NOTES

Search Notes	Date	Examiner

INTERFERENCE SEARCH

US Class/ CPC Symbol	US Subclass / CPC Group	Date	Examiner

UNITED STATES PATENT AND TRADEMARK OFFICE
COMMISSIONER FOR PATENTS
P.O.BOX 1450
ALEXANDRIA VA 22313-1451

PRESORTED
FIRST-CLASS MAIL
U.S. POSTAGE PAID
POSTEDIGITAL
NNNNN

LAWRENCE E. LAMBELET JR.
7548 Caprio Dr
Boynton Beach, FL 33472

Courtesy Reminder for
Application Serial No: 14/706,019

Attorney Docket No: 15050 XP
Customer Number: 25957
Date of Electronic Notification: 08/07/2017

This is a courtesy reminder that new correspondence is available for this application. If you have not done so already, please review the correspondence. The official date of notification of the outgoing correspondence will be indicated on the form PTOL-90 accompanying the correspondence.

An email notification regarding the correspondence was sent to the following email address(es) associated with your customer number:

agent@xpertpatents.com
dockets@walsh-ip.com
pwalsh@walsh-ip.com

To view your correspondence online or update your email addresses, please visit us anytime at **https://sportal.uspto.gov/secure/myportal/privatepair.** If you have any questions, please email the Electronic Business Center (EBC) at EBC@uspto.gov or call 1-866-217-9197.

IN THE UNITED STATES PATENT AND TRADEMARK OFFICE

In re Application of: Daniel Kane	Examiner: Tri Mai
Application No.:14/706,019	Group Art Unit: 3781
Date Filed: May 7, 2015	Conf. No.: 1661
Title: COMPACT WALLET	Customer No.: 95490

MS Amendment
Commissioner for Patents
P.O. Box 1450
Alexandria VA 22313-1450

RESPONSE TO OFFICE ACTION

Sir:

In response to the Office Action, please amend the above-identified application as follows. If necessary, the Commissioner is hereby authorized to credit any overpayment or charge payment for any additional fees to Deposit Account No. 50-5200.

Amendments to the Claims are reflected in the listing of claims which begins on page 2 of this paper.

Remarks/Arguments begin on page 7 of this paper.

SHENZHEN PINCAN Exhibit 1017 Page 80

Amendments to the Claims:

This listing of claims will replace all prior versions, and listings, of claims in the application:

Listing of Claims:

1. (Currently amended) A compact wallet, comprising:

at least two rigid plates interposed to sandwich card-like contents there between, each rigid plate having a longitudinal extent;

at least one encircling elastic band interposed with the at least two rigid plates along longitudinal extents thereof to bias them inwardly and securely hold the card-like contents while providing elastic volume there between for adding or removing contents; ~~and~~

a channeling means configured to minimize the profile of the wallet and hold position of the at least one encircling elastic band with respect to each rigid plate while allowing freedom for the dynamic extension and contraction of the band over the entire running length thereof; <u>and</u>

<u>aligned finger notches through proximal ends of the rigid plates to expose an edge of the card-like contents for the purpose of pushing the edge to elevate the contents into view through distal ends of the rigid plates, said edge providing a fulcrum to lever the proximal ends together for the purpose of fanning the distal ends apart in display of the contents,</u>

whereby, card-like contents may be carried with minimal silhouette on or with a person while allowing expandable capacity and ready access to individual contents from between the at least two rigid plates.

2. The compact wallet of claim 1, wherein the channeling means is a longitudinal groove in a first lamina of a laminate construction of each rigid plate, the groove slidingly receiving one part of the at least one encircling elastic band.

3. The compact wallet of claim 2, wherein a second lamina of the laminate construction of each rigid plate is removably attached to the first lamina to hold the at least one elastic band in capture and provide a smooth surface for glide purposes.

4. The compact wallet of claim 3, wherein the second lamina is attached to the first lamina by screws.

5. The compact wallet of claim 3, wherein the second lamina is attached to the first lamina by pressure sensitive adhesive means.

6. The compact wallet of claim 1, wherein each rigid plate is comprised of metal for RFID protection.

7. The compact wallet of claim 1, wherein each rigid plate is metalized for RFID protection.

8. The compact wallet of claim 3, wherein at least one of the first or second lamina of each rigid plate is comprised of metal.

9. The compact wallet of claim 1, further comprising a first elastic strap positioned over the ends of the at least two rigid plates transverse to the longitudinal extents, the positioning functioning to retain the card-like contents from that end.

10. The compact wallet of claim 1, further comprising a second elastic strap positioned over an outside surface of one of the at least two rigid plates to hold additional contents on the outside surface.

11. The compact wallet 0 f claim 1, wherein the card-like contents comprise one or more of a credit card, a driver's license, an ID card, a business card, an affiliation card, a currency bill, a loyalty card, a coupon, a receipt or a personal paper.

12. (Canceled)

13. The compact wallet of claim 1, wherein the encircling elastic band is comprised of woven elastic fabric.

14. (Currently amended) A compact wallet, comprising:

at least two rigid plates interposed to sandwich card-like contents there between, each rigid plate having a groove along a longitudinal extent thereof;

at least one encircling elastic band slidingly interposed in the grooves to bias the at least two rigid plates inwardly and securely hold the card-like contents while providing elastic volume there between for adding or removing contents, the grooves configured to hold position of the at least one encircling elastic band with respect to each rigid plate while allowing freedom for the dynamic extension and contraction of the band over the entire running length thereof;

<u>wherein the groove is in a first lamina of a laminate construction of each rigid plate, the groove slidingly receiving one part of the at least one encircling elastic band; and</u>

<u>wherein a second lamina of the laminate construction of each rigid plate is removably attached to the first lamina to capture the at least one elastic band and provide a smooth surface for glide,</u>

whereby, card-like contents may be carried with minimal silhouette on or with a person while allowing expandable capacity and ready access to individual contents from between the at least two rigid plates.

15. (Canceled)

16. (Canceled)

17. The compact wallet of claim 16, wherein the second lamina is attached to the first lamina by screws.

18. The compact wallet of claim 1, wherein each rigid plate is comprised of metal for RFID protection.

19. (New) A compact wallet, comprising:

at least two rigid plates interposed to sandwich card-like contents there between, each rigid plate having a longitudinal extent;

at least one encircling elastic band interposed with the at least two rigid plates along longitudinal extents thereof to bias them inwardly and securely hold the card-like contents while providing elastic volume there between for adding or removing contents; ~~and~~

a groove configured to minimize the profile of the wallet and hold position of the at least one encircling elastic band with respect to each rigid plate while allowing freedom for the dynamic extension and contraction of the band over the entire running length thereof;

a first elastic strap positioned over the ends of the at least two rigid plates transverse to the longitudinal extents, the positioning functioning to retain the card-like contents from that end; and

aligned finger notches through proximal ends of the rigid plates to expose an edge of the card-like contents for the purpose of pushing the edge to elevate the contents into view through distal ends of the rigid plates, said edge providing a fulcrum to lever the proximal ends together for the purpose of fanning the distal ends apart in display of the contents,

wherein the groove is in a first lamina of a laminate construction of each rigid plate, the groove slidingly receiving one part of the at least one encircling elastic band; and

wherein a second lamina of the laminate construction of each rigid plate is removably attached to the first lamina to capture the at least one elastic band and provide a smooth surface for glide,

whereby, card-like contents may be carried with minimal silhouette on or with a person while allowing expandable capacity and ready access to individual contents from between the at least two rigid plates.

20. (New) The compact wallet of claim 19, further comprising a second elastic strap positioned over an outside surface of one of the at least two rigid plates to hold additional contents on the outside surface.

Electronic Acknowledgement Receipt

EFS ID:	30881508
Application Number:	14706019
International Application Number:	
Confirmation Number:	1677
Title of Invention:	COMPACT WALLET
First Named Inventor/Applicant Name:	Daniel Kane
Customer Number:	25957
Filer:	Lyman H Smith
Filer Authorized By:	
Attorney Docket Number:	15050 XP
Receipt Date:	07-NOV-2017
Filing Date:	07-MAY-2015
Time Stamp:	17:04:08
Application Type:	Utility under 35 USC 111(a)

Payment information:

Submitted with Payment	no

File Listing:

Document Number	Document Description	File Name	File Size(Bytes)/ Message Digest	Multi Part /.zip	Pages (if appl.)
1		ReplyOA_Kane.pdf	163146 c49f5fa8e50c7c0689f8edadbe42e6fd35a8c367	yes	17

	Multipart Description/PDF files in .zip description		
	Document Description	**Start**	**End**
	Applicant Arguments/Remarks Made in an Amendment	7	17
	Claims	2	6
	Amendment/Req. Reconsideration-After Non-Final Reject	1	1

Warnings:

Information:

Total Files Size (in bytes):	163146

This Acknowledgement Receipt evidences receipt on the noted date by the USPTO of the indicated documents, characterized by the applicant, and including page counts, where applicable. It serves as evidence of receipt similar to a Post Card, as described in MPEP 503.

<u>New Applications Under 35 U.S.C. 111</u>
If a new application is being filed and the application includes the necessary components for a filing date (see 37 CFR 1.53(b)-(d) and MPEP 506), a Filing Receipt (37 CFR 1.54) will be issued in due course and the date shown on this Acknowledgement Receipt will establish the filing date of the application.
<u>National Stage of an International Application under 35 U.S.C. 371</u>
If a timely submission to enter the national stage of an international application is compliant with the conditions of 35 U.S.C. 371 and other applicable requirements a Form PCT/DO/EO/903 indicating acceptance of the application as a national stage submission under 35 U.S.C. 371 will be issued in addition to the Filing Receipt, in due course.
<u>New International Application Filed with the USPTO as a Receiving Office</u>
If a new international application is being filed and the international application includes the necessary components for an international filing date (see PCT Article 11 and MPEP 1810), a Notification of the International Application Number and of the International Filing Date (Form PCT/RO/105) will be issued in due course, subject to prescriptions concerning national security, and the date shown on this Acknowledgement Receipt will establish the international filing date of the application.

REMARKS/ARGUMENTS

Status of Claims

Claims 1-18 were pending. Claims 1-18 were rejected. Claims 1 and 14 are amended. Claims 12, 15 and 16 are canceled without prejudice or disclaimer of subject matter. New claim 19 and 20 are added.

Claims 1, 2, 10, 11 and 14 are rejected under 35 USC 103 as being unpatentable over Strunk (US 5,952,637) in view of Minn et al. (US 9,125,464) OR Keefer (US 1,525,745). Claim 13 is rejected under 35 USC 103 as being unpatentable over Strunk in view of Minn OR Keefer, further in view of Graff (US 4,477,928) OR Malick (US 6,094,747) OR Preston-Hall (US 8,381,360). Claims 1, 2 and 11 are rejected under 35 USC 103 as being unpatentable over Wilk (US D716,043) in view of Podwika (US 5,944,080). Claim 13 is rejected under 35 USC 103 as being unpatentable over Wilk in view of Podwika, further in view of Graff OR Malick OR Preston-Hall. Claims 6 and 7 are rejected under 35 USC 103 as being unpatentable over Wilk in view of Podwika, further in view of Minn, and even further in view of Johnson et al. (US 9,314,074). Claims 1-11 and 13-18 are rejected under 35 USC 103 as being unpatentable over Wilk in view of Coates (US 7,527,081) further in view of Podwika. Claims 1, 2 and 14 are rejected under 35 USC 102 as being anticipated by Mariano (US 2,322,461). Claims 1-8 and 14-18 are rejected under 35 USC 103 as being unpatentable over Mariano in view of Andrews (US 11,348). Claim 11 is rejected under 35 USC 103 as being unpatentable over Mariano in view of Odishiro (US 6,205,622). Claims 1, 6, 7, 11, 12, 14 and 18 are rejected under 35 USC 102 as being anticipated by Minn. Claims 1-11 and 13-18 are rejected under 35 USC 103 as being unpatentable over Minn in view of Coates, further in view of Podwika.

Amendment of Claims

Independent claim 1 is amended to include the subject matter of claim 12.

Independent claim 14 is amended to include the subject matter 15 and 16.

No new matter is added.

New Claims

New claim 19 finds support from original claims 1, 9, 15 and 16. New claim 20 finds support from original claim 10. Applicant submits new independent claim 19 should be allowable at least for the reasons discussed below with respect to independent claims 1 and 14.

Summary of Applicant's Reasons for Allowability

Applicant has amended claim 1 to include the features of claim 12, that being the aligned notches through the rigid plates. The only rejection of claim 12 is a rejection made under 35 USC 102 as being anticipated by Minn (US 9,125,464). Applicant submits that Minn does not teach or fairly suggest aligned finger notches, as discussed below. To that end, in this rejection, at page 5 of the Office Action, the Examiner does not address the aligned tabs of claim 12, even though claim 12 is included in this rejection. Accordingly, claim 12 should be allowable and, claim 1, as amended to include the subject matter of claim 1, should be allowable.

Applicant has amended claim 14 to include the features of claims 15 and 16, namely the groove in a first lamina of a laminate construction of each rigid plate slidingly receiving one part of the at least one encircling elastic band, and a second lamina of the laminate construction of each rigid plate is removably attached to the first lamina to capture the at least one elastic band and provide a smooth surface for glide. The references relied on for this teaching do not teach or fairly suggest this structure. As discussed in detail below, the strap in Coates is fixed to the laminate. In Andrews, there is no groove, simply a clamshell structure. In Podwika, there is no second laminate sandwiching the strap. Thus, claim 14 should be allowable over the art of record.

Office Action Paragraph 2

Claims 1, 2, 10, 11 and 14 stand rejected under 35 USC 103 as being unpatentable over Strunk (US 5,952,637) in view of Minn et al. (US 9,125,464) OR Keefer (US 1,525,745).

Independent claim 1 has been amended to include the subject matter of claim 12, which is not rejected by the combination of Strunk, Minn and Keefer. Neither Strunk, Minn nor Keefer teach or fairly suggest the aligned finger notches as instantly claimed. Accordingly, claim 1 should be allowable over any permissible combination of Strunk, Minn and Keefer. Independent claim 14 has been amended to include the subject matter of claims 15 and 16, which are not rejected by the combination of Strunk, Minn and Keefer. Neither Strunk, Minn nor Keefer teach or fairly suggest the groove and laminate structure as instantly claimed. Accordingly, claim 14 should be allowable over any permissible combination of Strunk, Minn and Keefer. Claims 2, 10 and 11, being dependent upon and further limiting claim 1, should be allowable at least for that reason, as well as the additional recitations each claim contains.

Reconsideration and withdrawal of the rejection of claims 1, 2, 10, 11 and 14 as being unpatentable over Strunk in view of Minn OR Keefer is respectfully requested.

Office Action Paragraph 3

Claim 13 stands rejected under 35 USC 103 as being unpatentable over Strunk in view of Minn OR Keefer, further in view of Graff (US 4,477,928) OR Malick (US 6,094,747) OR Preston-Hall (US 8,381,360).

As discussed above, claim 1, from which claim 13 depends, should be allowable over Strunk, Minn and Keefer. The additional references of Graff, Malick and Preston-Hall do not provide any teachings to overcome the deficiencies of Strunk, Minn or Keefer, as discussed above with respect to claim 1. Therefore, independent claim 1 should be allowable over any permissible combination of Strunk, Minn, Keefer, Graff, Malick and Preston-Hall. Claim 13, being dependent on claim 1, should also be allowable over the combination of these <u>six</u> references.

Accordingly, reconsideration and withdrawal of the rejection of claim 13 as being unpatentable over Strunk in view of Minn OR Keefer, further in view of Graff OR Malick OR Preston-Hall.

Office Action Paragraph 4

Claims 1, 2 and 11 stand rejected under 35 USC 103 as being unpatentable over Wilk (US D716,043) in view of Podwika (US 5,944,080).

Independent claim 1 has been amended to include the subject matter of claim 12, which is not rejected by the combination of Wilk and Podwika. Neither Wilk nor Podwika teach or fairly suggest the aligned finger notches as instantly claimed. Accordingly, claim 1 should be allowable over any permissible combination of Wilk and Podwika. Claims 2 and 11, being dependent upon and further limiting claim 1, should be allowable at least for that reason, as well as the additional recitations each claim contains.

Accordingly, reconsideration and withdrawal of the rejection of claims 1, 2 and 11 as being unpatentable over Wilk in view of Podwika is respectfully requested.

Office Action Paragraph 5

Claim 13 stands rejected under 35 USC 103 as being unpatentable over Wilk in view of Podwika, further in view of Graff OR Malick OR Preston-Hall.

As discussed above, claim 1, from which claim 13 depends, should be allowable over Wilk and Podwika. The additional references of Graff, Malick and Preston-Hall do not provide any teachings to overcome the deficiencies of Wilk and Podwika, as discussed above with respect to claim 1. Therefore, independent claim 1 should be allowable over any permissible combination of Wilk, Podwika, Graff, Malick and Preston-Hall. Claim 13, being dependent on claim 1, should also be allowable over the combination of these <u>five</u> references.

Accordingly, reconsideration and withdrawal of the rejection of claim 13 as being unpatentable over Wilk in view of Podwika, further in view of Graff OR Malick OR Preston-Hall.

Office Action Paragraph 6

Claims 6 and 7 are rejected under 35 USC 103 as being unpatentable over Wilk in view of Podwika, further in view of Minn, and even further in view of Johnson et al. (US 9,314,074).

As discussed above, claim 1, from which claims 6 and 7 depend, should be allowable over Wilk and Podwika. The additional references of Minn and Johnson do not provide any teachings to overcome the deficiencies of Wilk and Podwika, as discussed above with respect to claim 1. Therefore, independent claim 1 should be allowable over any permissible combination of Wilk, Podwika, Minn and Johnson. Claims 6 and 7, being dependent on claim 1, should also be allowable over the combination of these references.

Accordingly, reconsideration and withdrawal of the rejection of claims 6 and 7 as being unpatentable over Wilk in view of Podwika, further in view of Minn and even further in view of Johnson.

Office Action Paragraph 7

Claims 1-11 and 13-18 stand rejected under 35 USC 103 as being unpatentable over Wilk in view of Coates (US 7,527,081) further in view of Podwika.

Independent claim 1 has been amended to include the subject matter of claim 12, which is not rejected by the combination of Wilk, Coates and Podwika. Neither Wilk, Coates nor Podwika teach or fairly suggest the aligned finger notches as instantly claimed. Accordingly, claim 1 should be allowable over any permissible combination of Wilk, Coates and Podwika. Claims 2-11 and 13, being dependent upon claim 1, should be allowable at least for that reason, as well as the additional recitations each claim contains.

Independent claim 14 has been amended to include the subject matter of claims 15 and 16. Claim 14 requires a groove along a longitudinal extent of the first laminate member. In Coates, the groove is not along a longitudinal extent of the structure, but instead is orthogonal to the longitudinal extent. Moreover, in Coates, the groove is not entirely through the laminate. See Figures 4 and 5 of Coates which clearly shows the groove only partially into the laminate 24a. Finally, the strap cannot be slidingly engages in the groove, as instantly claimed, as such the groove of Coates holds only an end piece of the strap 4, and, accordingly the strap would pull out if Coates permitted any sliding arrangement. Podwika does not include a laminate structure, nor a longitudinal groove as instantly claimed and there can be no motivation to modify Coates with Podwika, as such modifications would render Coates inoperable for its intended purpose.

Thus, claim 14 should be allowable over any permissible combination of Wilk, Coates and Podwika. Claims 15-18, being dependent upon and further limiting claim 14, should be allowable for that reason, as well as the additional recitations each claim contains.

Reconsideration and withdrawal of the rejection of claims 1-11 and 13-18 as being unpatentable over Wilk in view of Coates, further in view of Podwika is respectfully requested.

Office Action Paragraph 8

Claims 1, 2 and 14 stand rejected under 35 USC 102 as being anticipated by Mariano (US 2,322,461).

Independent claim 1 has been amended to include the subject matter of claim 12, which is not anticipated by Mariano. Mariano does not teach or fairly suggest the aligned finger notches as instantly claimed. Accordingly, claim 1 should be allowable over Mariano. Independent claim 14 has been amended to include the subject matter of claims 15 and 16, which are not anticipated by Mariano. Mariano does not teach or fairly suggest the groove and laminate structure as instantly claimed. Accordingly, claim 14 should be allowable over Mariano. Claim 2, being dependent upon and further limiting claim 1, should be allowable at least for that reason, as well as the additional recitations the claim contains.

Reconsideration and withdrawal of the rejection of claims 1, 2 and 14 as being anticipated by Mariano is respectfully requested.

Office Action Paragraph 9

Claims 1-8 and 14-18 stand rejected under 35 USC 103 as being unpatentable over Mariano in view of Andrews (US 11,348).

Independent claim 1 has been amended to include the subject matter of claim 12, which is not rejected by the combination of Mariano and Andrews. Neither Mariano nor Andrews teach or fairly suggest the aligned finger notches as instantly claimed. Accordingly, claim 1 should be allowable over any permissible combination of Mariano

and Andrews. Claims 2-11, being dependent upon claim 1, should be allowable at least for that reason, as well as the additional recitations each claim contains.

Independent claim 14 has been amended to include the subject matter of claims 15 and 16. Claim 14 requires a groove along a longitudinal extent of the first laminate member. In Andrews, there is no groove, but instead the front and back members of the clamshell design are curved to form a slot for inserting a belt. In the present invention, the groove permits the strap to pass without creating a substantial increase in width. In Andrews, because the two pieces of convex raised metal already form a slot, there is no reason why one skilled in the art would use a groove as instantly claimed.

Moreover, Mariano does not teach or fairly suggest at least two rigid plates interposed to sandwich card-like contents there between, each rigid plate having a groove along a longitudinal extent thereof and at least one encircling elastic band slidingly interposed in the grooves to <u>bias the at least two rigid plates inwardly and securely hold the card-like contents while providing elastic volume there between for adding or removing contents</u> as instantly claimed.

Finally, Applicant submits that Mariano is not analogous art.

It is well-established that the Office may only rely on analogous art to support an obviousness rejection. *Innovention Toys, LLC, v. MGA Entertainment, Inc.*, No. 2010-1290, slip op. at 12 (Fed. Cir. 2011); *In re Bigio*, 381 F.3d 1320, 1325 (Fed. Cir. 2004); *In re Clay*, 966 F.2d 656, 658 (Fed. Cir. 1992). While the scope of analogous prior art may sometimes be wide, the Federal Circuit has confirmed that it is not without limit. See *In re Klein*, 647 F.3d 1343 (Fed. Cir. 2011) (reversing the BPAI's judgment of obviousness after concluding that no less than five prior art references relied upon by the BPAI were non-analogous).

The test for analogous art is very specific. Art is non-analogous unless it is: (1) from the same field of endeavor as the claimed invention; or (2) reasonably pertinent to the particular problem faced by the inventor. *In re Bigio*, 381 F.3d at 1325; *In re Wood* and Eversole, 599 F.2d 1032, 1036 (CCPA 1979). Thus, an art citation that is not from the same field of endeavor as a claimed invention MUST be "reasonably pertinent" to the problem addressed by the inventor.

Applicant submits that the field of endeavor of the claimed invention is compact wallets. Mariano is drawn to a bracelet for providing a calendar date to a wearer. These are clearly separate fields of endeavor. One of ordinary skill in the art would not look toward Mariano for any teachings about compact wallets whatsoever, recognizing that Mariano is in a different field of endeavor.

Regarding the second prong of the analogous test, "reasonably pertinent", as described in a Memo from Robert Bahr, Acting Associate Commissioner for Patent Examination Policy, to the Patent Examining Corp on July 26, 2011, in order for a reference to be "reasonably pertinent" to the problem, it must "logically [ ] have commended itself to an inventor's attention in considering his problem." *In re Icon Health and Fitness, Inc.*, 496 F.3d 1374, 1379-80 (Fed. Cir. 2007) (quoting *In re Clay*, 966 F.2d 656,658 (Fed. Cir. 1992)). See generally MPEP 2141.01(a). *In re Klein*, 98 USPQ2d 1991 (Fed. Cir. June 2011), is instructive as to the "reasonably pertinent" prong for determining whether a reference is analogous art. In determining whether a reference is reasonably pertinent, an examiner should consider the problem faced by the inventor, as reflected - either explicitly or implicitly - in the specification. In the instant case, the inventor describes the problem as providing a functional compact wallet. This is not related to any conceivable problem that may be faced by Mariano.

In order to support a determination that a reference is reasonably pertinent, it may be appropriate to include a statement of the examiner's understanding of the problem. The question of whether a reference is reasonably pertinent often turns on how the problem to be solved is perceived. If the problem to be solved is viewed in a narrow or constrained way, and such a view is not consistent with the specification, the scope of available prior art may be inappropriately limited. It may be necessary for the examiner to explain why an inventor seeking to solve the identified problem would have looked to the reference in an attempt to find a solution to the problem.

In the instant case, Applicant submits that Mariano is neither in the same field of endeavor as the present invention, nor is reasonably pertinent to the particular problem faced by the inventor.

For these reasons, independent claim 14 should be allowable over any permissible combination of Mariano and Andrews. Claims 15-18, being dependent on claim 14, should

SHENZHEN PINCAN Exhibit 1017 Page 95

be allowable at least for that reason, as well as the additional recitations each claim contains.

Reconsideration and withdrawal of the rejection of claims 1-8 and 14-18 as being unpatentable over Mariano in view of Andrews is respectfully requested.

Office Action Paragraph 10

Claim 11 stands rejected under 35 USC 103 as being unpatentable over Mariano in view of Odishiro (US 6,205,622).

As discussed above, claim 1 should be allowable over Mariano. Odishiro does not provide any teaching that overcomes the deficiencies of Mariano. Accordingly, claim 11 should be allowable over any permissible combination of Mariano and Odishiro.

Reconsideration and withdrawal of the rejection of claim 11 as being unpatentable over Mariano in view of Odishiro is respectfully requested.

Office Action Paragraph 11

Claims 1, 6, 7, 11, 12, 14 and 18 stand rejected under 35 USC 102 as being anticipated by Minn.

As noted above, this is the only rejection of dependent claim 12, which has been added to independent claim 1. However, the Examiner does not appear to treat claim 12 in the rejection at page 5 of the Office Action. While there are indents in the corners (opposite corners) in Minn, there are no <u>aligned</u> finger notches taught or fairly suggested by Minn as instantly claimed in claim 1. Moreover, there can be no motivation to modify Minn to make the opposite corner notches aligned, as claimed, because such a modification would render the Minn invention unsuitable for its intended purpose. In Minn, the thumb tabs 20A, 20B are disposed in the particularly disclosed positions to permit a user's thumbs to open the device.

For these reasons, claim 1 should be allowable over Minn. Claims 6, 7, 11 and 12, being dependent upon claim 1, should be allowable for at least that reason, as well as the additional recitations each claim contains.

Independent claim 14 has been amended to include the subject matter of claims 15 and 16, which are not anticipated by Minn. Minn does not teach or fairly suggest the

SHENZHEN PINCAN Exhibit 1017 Page 96

groove and laminate structure as instantly claimed. Accordingly, claim 14 should be allowable over Minn. Claim 18, being dependent upon and further limiting claim 1, should be allowable at least for that reason, as well as the additional recitations the claim contains.

Reconsideration and withdrawal of the rejection of claims 1, 6, 7, 11, 12, 14 and 18 as being anticipated by Minn is respectfully requested.

Office Action Paragraph 12

Claims 1-11 and 13-18 stand rejected under 35 USC 103 as being unpatentable over Minn in view of Coates, further in view of Podwika.

Independent claim 1 has been amended to include the subject matter of claim 12, which is not rejected by the combination of Minn, Coates and Podwika. Neither Minn, Coates nor Podwika teach or fairly suggest the aligned finger notches as instantly claimed. Accordingly, claim 1 should be allowable over any permissible combination of Minn, Coates and Podwika. Claims 2-11 and 13, being dependent upon claim 1, should be allowable at least for that reason, as well as the additional recitations each claim contains.

Independent claim 14 has been amended to include the subject matter of claims 15 and 16. Claim 14 requires a groove along a longitudinal extent of the first laminate member. In Coates, relied on for the teaching of the groove, the groove is not along a longitudinal extent of the structure, but instead is orthogonal to the longitudinal extent. Moreover, in Coates, the groove is not entirely through the laminate. See Figures 4 and 5 of Coates which clearly shows the groove only partially into the laminate 24a. Finally, the strap cannot be slidingly engages in the groove, as instantly claimed, as such the groove of Coates holds only an end piece of the strap 4, and, accordingly the strap would pull out if Coates permitted any sliding arrangement. Podwika does not include a laminate structure, nor a longitudinal groove as instantly claimed and there can be no motivation to modify Coates with Podwika, as such modifications would render Coates inoperable for its intended purpose.

Thus, claim 14 should be allowable over any permissible combination of Minn, Coates and Podwika. Claims 15-18, being dependent upon and further limiting claim 14, should be allowable for that reason, as well as the additional recitations each claim contains.

Reconsideration and withdrawal of the rejection of claims 1-11 and 13-18 as being unpatentable over Minn in view of Coates, further in view of Podwika is respectfully requested.

CONCLUSION

Reconsideration and withdrawal of the Office Action with respect to the pending claims is requested. Applicant submits that the claims are now in condition for allowance. Early notice to that end is respectfully solicited.

In the event the examiner wishes to discuss any aspect of this response, please contact the attorney at the telephone number identified below.

Respectfully submitted,

/Lyman Smith/
Lyman Smith
Registration No. 44,342

Patent Service Associates, Inc.
18702 Van Nuys Circle
Port Charlotte, FL 33948
336-510-8799

UNITED STATES PATENT AND TRADEMARK OFFICE

UNITED STATES DEPARTMENT OF COMMERCE
United States Patent and Trademark Office
Address: COMMISSIONER FOR PATENTS
P.O. Box 1450
Alexandria, Virginia 22313-1450
www.uspto.gov

APPLICATION NO.	FILING DATE	FIRST NAMED INVENTOR	ATTORNEY DOCKET NO.	CONFIRMATION NO.
14/706,019	05/07/2015	Daniel Kane	15050 XP	1677

25957 7590 11/13/2017
LAWRENCE E. LAMBELET JR.
7548 Caprio Dr
Boynton Beach, FL 33472

EXAMINER
MAI, TRI M

ART UNIT	PAPER NUMBER
3781	

NOTIFICATION DATE	DELIVERY MODE
11/13/2017	ELECTRONIC

Please find below and/or attached an Office communication concerning this application or proceeding.

The time period for reply, if any, is set in the attached communication.

Notice of the Office communication was sent electronically on above-indicated "Notification Date" to the following e-mail address(es):

agent@xpertpatents.com
dockets@walsh-ip.com
pwalsh@walsh-ip.com

UNITED STATES DEPARTMENT OF COMMERCE
U.S. Patent and Trademark Office
Address : COMMISSIONER FOR PATENTS
P.O. Box 1450
Alexandria, Virginia 22313-1450

APPLICATION NO./ CONTROL NO.	FILING DATE	FIRST NAMED INVENTOR / PATENT IN REEXAMINATION	ATTORNEY DOCKET NO.
14/706,019	07 May, 2015	KANE, DANIEL	15050 XP

		EXAMINER	
LAWRENCE E. LAMBELET JR. 7548 Caprio Dr Boynton Beach, FL 33472		RICHARD ELLIS	
		ART UNIT	PAPER
		OPIM	20171103-112339

DATE MAILED:

Please find below and/or attached an Office communication concerning this application or proceeding.

Commissioner for Patents

The time period for reply set forth in the previous non-final action is being restarted to run from the mail date of the instant communication. Please refer to the non-final action for information on extensions of time if needed for the reply.

The time period is being restarted because the USPTO has identified that the zip code of the correspondence address of the instant application is in an area affected by a recent hurricane. In addition, the non-final action was outstanding on the applicable date and the statutory time period for reply has not yet expired.

If a reply to the non-final action has been filed, no reply to the instant communication is required.

For a copy of the relevant notice on the relief available due to the recent hurricane, see https://www.uspto.gov/learning-and-resources/operational-status/customers-affected-hurricane-harvey

Questions regarding this communication may be directed to DisasterRelief@uspto.gov

PTO-90C (Rev.04-03)

UNITED STATES PATENT AND TRADEMARK OFFICE

UNITED STATES DEPARTMENT OF COMMERCE
United States Patent and Trademark Office
Address: COMMISSIONER FOR PATENTS
P.O. Box 1450
Alexandria, Virginia 22313-1450
www.uspto.gov

APPLICATION NO.	FILING DATE	FIRST NAMED INVENTOR	ATTORNEY DOCKET NO.	CONFIRMATION NO.
14/706,019	05/07/2015	Daniel Kane	15050 XP	1677

25957 7590 01/16/2018
LAWRENCE E. LAMBELET JR.
7548 Caprio Dr
Boynton Beach, FL 33472

EXAMINER
MAI, TRI M

ART UNIT	PAPER NUMBER
3781	

NOTIFICATION DATE	DELIVERY MODE
01/16/2018	ELECTRONIC

Please find below and/or attached an Office communication concerning this application or proceeding.

The time period for reply, if any, is set in the attached communication.

Notice of the Office communication was sent electronically on above-indicated "Notification Date" to the following e-mail address(es):

agent@xpertpatents.com
dockets@walsh-ip.com
pwalsh@walsh-ip.com

Office Action Summary	Application No. 14/706,019	Applicant(s) KANE, DANIEL	
	Examiner TRI MAI	Art Unit 3781	AIA (First Inventor to File) Status Yes

-- The MAILING DATE of this communication appears on the cover sheet with the correspondence address --

Period for Reply

A SHORTENED STATUTORY PERIOD FOR REPLY IS SET TO EXPIRE 3 MONTHS FROM THE MAILING DATE OF THIS COMMUNICATION.

- Extensions of time may be available under the provisions of 37 CFR 1.136(a). In no event, however, may a reply be timely filed after SIX (6) MONTHS from the mailing date of this communication.
- If NO period for reply is specified above, the maximum statutory period will apply and will expire SIX (6) MONTHS from the mailing date of this communication.
- Failure to reply within the set or extended period for reply will, by statute, cause the application to become ABANDONED (35 U.S.C. § 133). Any reply received by the Office later than three months after the mailing date of this communication, even if timely filed, may reduce any earned patent term adjustment. See 37 CFR 1.704(b).

Status

1)☐ Responsive to communication(s) filed on _____.

☐ A declaration(s)/affidavit(s) under **37 CFR 1.130(b)** was/were filed on _____.

2a)☒ This action is **FINAL**. 2b)☐ This action is non-final.

3)☐ An election was made by the applicant in response to a restriction requirement set forth during the interview on _____; the restriction requirement and election have been incorporated into this action.

4)☐ Since this application is in condition for allowance except for formal matters, prosecution as to the merits is closed in accordance with the practice under *Ex parte Quayle*, 1935 C.D. 11, 453 O.G. 213.

Disposition of Claims*

5)☒ Claim(s) *1-11,13,14 and 17-20* is/are pending in the application.

5a) Of the above claim(s) _____ is/are withdrawn from consideration.

6)☒ Claim(s) *19 and 20* is/are allowed.

7)☒ Claim(s) *1-11,13,14,17 and 18* is/are rejected.

8)☐ Claim(s) _____ is/are objected to.

9)☐ Claim(s) _____ are subject to restriction and/or election requirement.

* If any claims have been determined allowable, you may be eligible to benefit from the **Patent Prosecution Highway** program at a participating intellectual property office for the corresponding application. For more information, please see http://www.uspto.gov/patents/init_events/pph/index.jsp or send an inquiry to PPHfeedback@uspto.gov.

Application Papers

10)☐ The specification is objected to by the Examiner.

11)☐ The drawing(s) filed on _____ is/are: a)☐ accepted or b)☐ objected to by the Examiner.

Applicant may not request that any objection to the drawing(s) be held in abeyance. See 37 CFR 1.85(a).

Replacement drawing sheet(s) including the correction is required if the drawing(s) is objected to. See 37 CFR 1.121(d).

Priority under 35 U.S.C. § 119

12)☐ Acknowledgment is made of a claim for foreign priority under 35 U.S.C. § 119(a)-(d) or (f).

Certified copies:

a)☐ All b)☐ Some** c)☐ None of the:

1.☐ Certified copies of the priority documents have been received.

2.☐ Certified copies of the priority documents have been received in Application No. _____.

3.☐ Copies of the certified copies of the priority documents have been received in this National Stage application from the International Bureau (PCT Rule 17.2(a)).

** See the attached detailed Office action for a list of the certified copies not received.

Attachment(s)

1) ☐ Notice of References Cited (PTO-892)

2) ☐ Information Disclosure Statement(s) (PTO/SB/08a and/or PTO/SB/08b) Paper No(s)/Mail Date _____.

3) ☐ Interview Summary (PTO-413) Paper No(s)/Mail Date. _____ .

4) ☐ Other: _____.

1. The present application, filed on or after March 16, 2013, is being examined under the first inventor to file provisions of the AIA.

2. Claim 17 is objected to for depending on a canceled claim.

3. Claims 1, 6-7, 11, 14, and 18 are rejected under 35 U.S.C. 102(a)(1) as being anticipated by Minn (9125464). Minn teaches Wilk teaches a device with two rigid plates each having a longitudinal extend, a channeling means being the notches at the two edges, and an encircling elastic band allowing freedom. It is noted that "channeling means" is not a 112, 6th recitation since the specification defines it as open ended definition, e.g., paragraphs 11, 30. Therefore the notches at the two ends allowing the band of elastic moving freely on a longitudinal direction would meet the claimed channeling means.

Regarding claim 12, note the numerous teachings of aligned notches at 58A, and 58B in figs. 67, and 122A in fig. 20, and 142A and 150A in Fig. 28. Note that the functionality of using the notches for elevating the contents by providing a fulcrum to lever the proximal ends together is an intended use.

4. Claims 1-11, 13-14, and 17-18 are rejected under 35 U.S.C. 103 as being unpatentable over Minn in view of Coates et al. (7527081), and further in view of Podwika (5944080). In the alternative, Contes also teaches the panels each comprising of two portions 24a/24b and the elastic portion is positioned between recesses of the two rigid portions in fig. 13. Therefore, it would have been obvious to one of ordinary skill in the art to provide each rigid member of Minn of two portions and the elastic portion is positioned between recesses of the two rigid portions as

taught by Contes to provide the desired construction for the rigid panel and to minimize the thickness. Also Podwika teaches that providing attachment as optional (see abstract). Therefore, to provide the two rigid portions without other attachment means to keep the device freely slidingly moving as taught by Podwika would have been obvious.

Regarding claims 4 and 5, and 17, it would have been obvious to one of ordinary skill in the art to provide screws or pressure sensitive adhesive to provide the desired fastening means for the two portions.

5. Claims 14, and 17-18 are rejected under 35 U.S.C. 103 as being unpatentable over Mariano (2322461) in view of Andrews (11348). Mariano teaches a device being an endless cord 2' with two rigid panels each having a longitudinal extend. Mariano teaches that portions 1, 3, and 4 are strung and movable on an endless elastic band. The band is positioned between the two surfaces as noted in fig. 2, where the band is hidden between the two front and back surfaces. Therefore, there must be some kind of groove or channel between the two surfaces in Mariano to accommodate the movement of the elastic band. Andrews teaches a construction that the band can be placed in a groove between the two separate front and back surfaces. Therefore to construct each of portion 1 of two separate portions with a groove in each surface to accommodate the band there between as taught by Andrews would have been obvious.

6. Applicant's arguments have been fully considered but they are not persuasive. Applicant asserts that the office action does not address claim 12. As set forth above, there are numerous

teachings of aligned notches explicitly shown in Minn at 58A, and 58B in figs. 67, and 122A in fig. 20, and 142A and 150A in Fig. 28.

With respect to the Mariano rejection, it is noted that Mariano teaches an endless elastic band movable, and it is positioned between the two surfaces as noted in fig. 2 where the band is hidden between the two front and back surfaces. Therefore, there must be some kind of groove or channel between the two surfaces in Mariano to accommodate the movement of the elastic band. Andrews teaches a construction that the band can be placed in a groove between the front and back surfaces. Therefore to construct each of portion 1 of two separate portions with a groove in each surface to accommodate the band there between as taught by Andrews would have been obvious.

With respect to Mariano rejection, applicant asserts that Mariano is not of analogous art. It is noted that the claim does not impart any structure over the band in Mariano. Furthermore, it is noted that elastic band normally used to tie personal contents including money or credit card together can be worn on wristband.

7. Claim 19 is allowed.

8. Any inquiry concerning this communication or earlier communications from the examiner should be directed to TRI MAI whose telephone number is (571)272-4541. The examiner can normally be reached on M-F 7 am - 4:00 pm.

Examiner interviews are available via telephone, in-person, and video conferencing using a USPTO supplied web-based collaboration tool. To schedule an interview, applicant is

encouraged to use the USPTO Automated Interview Request (AIR) at http://www.uspto.gov/interviewpractice.

If attempts to reach the examiner by telephone are unsuccessful, the examiner's supervisor, Fenn Mathew can be reached on 571-272-4978. The fax phone number for the organization where this application or proceeding is assigned is 571-273-8300.

Information regarding the status of an application may be obtained from the Patent Application Information Retrieval (PAIR) system. Status information for published applications may be obtained from either Private PAIR or Public PAIR. Status information for unpublished applications is available through Private PAIR only. For more information about the PAIR system, see http://pair-direct.uspto.gov. Should you have questions on access to the Private PAIR system, contact the Electronic Business Center (EBC) at 866-217-9197 (toll-free). If you would like assistance from a USPTO Customer Service Representative or access to the automated information system, call 800-786-9199 (IN USA OR CANADA) or 571-272-1000.

/TRI MAI/
Primary Examiner, Art Unit 3781

Search Notes	Application/Control No.	Applicant(s)/Patent Under Reexamination
	14706019	KANE, DANIEL
	Examiner	**Art Unit**
	TRI MAI	3781

CPC- SEARCHED

Symbol	Date	Examiner
a45c 1/06, 1/08, 11/182, 13/185, 2001/083, 2011/186	7/31/2017	TM

CPC COMBINATION SETS - SEARCHED

Symbol	Date	Examiner

US CLASSIFICATION SEARCHED

Class	Subclass	Date	Examiner

* See search history printout included with this form or the SEARCH NOTES box below to determine the scope of the search.

SEARCH NOTES

Search Notes	Date	Examiner
search updated	1/9/2018	TM

INTERFERENCE SEARCH

US Class/ CPC Symbol	US Subclass / CPC Group	Date	Examiner

UNITED STATES PATENT AND TRADEMARK OFFICE
COMMISSIONER FOR PATENTS
P.O.BOX 1450
ALEXANDRIA VA 22313-1451

PRESORTED
FIRST-CLASS MAIL
U.S. POSTAGE PAID
POSTEDIGITAL
NNNNN

LAWRENCE E. LAMBELET JR.
7548 Caprio Dr
Boynton Beach, FL 33472

Courtesy Reminder for
Application Serial No: 14/706,019

Attorney Docket No: 15050 XP
Customer Number: 25957
Date of Electronic Notification: 01/16/2018

This is a courtesy reminder that new correspondence is available for this application. If you have not done so already, please review the correspondence. The official date of notification of the outgoing correspondence will be indicated on the form PTOL-90 accompanying the correspondence.

An email notification regarding the correspondence was sent to the following email address(es) associated with your customer number:

agent@xpertpatents.com
dockets@walsh-ip.com
pwalsh@walsh-ip.com

To view your correspondence online or update your email addresses, please visit us anytime at **https://sportal.uspto.gov/secure/myportal/privatepair.** If you have any questions, please email the Electronic Business Center (EBC) at EBC@uspto.gov or call 1-866-217-9197.

IN THE UNITED STATES PATENT AND TRADEMARK OFFICE

In re Application of: Daniel Kane	Examiner: Tri Mai
Application No.:14/706,019	Group Art Unit: 3781
Date Filed: May 7, 2015	Conf. No.: 1661
Title: COMPACT WALLET	Customer No.: 95490

MS Amendment
Commissioner for Patents
P.O. Box 1450
Alexandria VA 22313-1450

RESPONSE TO OFFICE ACTION FILED WITH A REQUEST FOR CONTINUED EXAMINATION

Sir:

In response to the Final Office Action, please amend the above-identified application as follows and accept the attached as a submission filed with a RCE. If necessary, the Commissioner is hereby authorized to credit any overpayment or charge payment for any additional fees to Deposit Account No. 50-5200.

Amendments to the Claims are reflected in the listing of claims which begins on page 2 of this paper.

Remarks/Arguments begin on page 4 of this paper.

SHENZHEN PINCAN Exhibit 1017 Page 109

Amendments to the Claims:

This listing of claims will replace all prior versions, and listings, of claims in the application:

Listing of Claims:

1-3. (Canceled)

4. (Currently amended) The compact wallet of claim 19 [[3]], wherein the second lamina is attached to the first lamina by screws.

5. (Currently amended) The compact wallet of claim 19 [[3]], wherein the second lamina is attached to the first lamina by pressure sensitive adhesive means.

6. (Currently amended) The compact wallet of claim 19 [[1]], wherein each rigid plate is comprised of metal for RFID protection.

7. (Currently amended) The compact wallet of claim 19 [[1]], wherein each rigid plate is metalized for RFID protection.

8. (Currently amended) The compact wallet of claim 19 [[3]], wherein at least one of the first or second lamina of each rigid plate is comprised of metal.

9 - 12. (Canceled)

13. (Currently amended) The compact wallet of claim 19 [[1]], wherein the encircling elastic band is comprised of woven elastic fabric.

14 - 18. (Canceled)

SHENZHEN PINCAN Exhibit 1017 Page 110

19. (Previously presented) A compact wallet, comprising:

at least two rigid plates interposed to sandwich card-like contents there between, each rigid plate having a longitudinal extent;

at least one encircling elastic band interposed with the at least two rigid plates along longitudinal extents thereof to bias them inwardly and securely hold the card-like contents while providing elastic volume there between for adding or removing contents;

a groove configured to minimize the profile of the wallet and hold position of the at least one encircling elastic band with respect to each rigid plate while allowing freedom for the dynamic extension and contraction of the band over the entire running length thereof;

a first elastic strap positioned over the ends of the at least two rigid plates transverse to the longitudinal extents, the positioning functioning to retain the card-like contents from that end; and

aligned finger notches through proximal ends of the rigid plates to expose an edge of the card-like contents for the purpose of pushing the edge to elevate the contents into view through distal ends of the rigid plates, said edge providing a fulcrum to lever the proximal ends together for the purpose of fanning the distal ends apart in display of the contents,

wherein the groove is in a first lamina of a laminate construction of each rigid plate, the groove slidingly receiving one part of the at least one encircling elastic band; and

wherein a second lamina of the laminate construction of each rigid plate is removably attached to the first lamina to capture the at least one elastic band and provide a smooth surface for glide,

whereby, card-like contents may be carried with minimal silhouette on or with a person while allowing expandable capacity and ready access to individual contents from between the at least two rigid plates.

20. (Previously presented) The compact wallet of claim 19, further comprising a second elastic strap positioned over an outside surface of one of the at least two rigid plates to hold additional contents on the outside surface.

SHENZHEN PINCAN Exhibit 1017 Page 111

PTO/SB/08a (02-18)
Approved for use through 11/30/2020. OMB 0651-0031
U.S. Patent and Trademark Office; U.S. DEPARTMENT OF COMMERCE
Under the Paperwork Reduction Act of 1995, no persons are required to respond to a collection of information unless it contains a valid OMB control number.

INFORMATION DISCLOSURE STATEMENT BY APPLICANT

(Not for submission under 37 CFR 1.99)

Application Number	14706019
Filing Date	2015-05-07
First Named Inventor	Daniel Kane
Art Unit	3781
Examiner Name	Tri Mai
Attorney Docket Number	

U.S.PATENTS Remove

Examiner Initial*	Cite No	Patent Number	Kind Code[1]	Issue Date	Name of Patentee or Applicant of cited Document	Pages,Columns,Lines where Relevant Passages or Relevant Figures Appear
	1					

If you wish to add additional U.S. Patent citation information please click the Add button. Add

U.S.PATENT APPLICATION PUBLICATIONS Remove

Examiner Initial*	Cite No	Publication Number	Kind Code[1]	Publication Date	Name of Patentee or Applicant of cited Document	Pages,Columns,Lines where Relevant Passages or Relevant Figures Appear
	1					

If you wish to add additional U.S. Published Application citation information please click the Add button. Add

FOREIGN PATENT DOCUMENTS Remove

Examiner Initial*	Cite No	Foreign Document Number[3]	Country Code[2] i	Kind Code[4]	Publication Date	Name of Patentee or Applicant of cited Document	Pages,Columns,Lines where Relevant Passages or Relevant Figures Appear	T[5]
	1							

If you wish to add additional Foreign Patent Document citation information please click the Add button Add

NON-PATENT LITERATURE DOCUMENTS Remove

Examiner Initials*	Cite No	Include name of the author (in CAPITAL LETTERS), title of the article (when appropriate), title of the item (book, magazine, journal, serial, symposium, catalog, etc), date, pages(s), volume-issue number(s), publisher, city and/or country where published.	T[5]

INFORMATION DISCLOSURE STATEMENT BY APPLICANT (Not for submission under 37 CFR 1.99)		
	Application Number	14706019
	Filing Date	2015-05-07
	First Named Inventor	Daniel Kane
	Art Unit	3781
	Examiner Name	Tri Mai
	Attorney Docket Number	

	1	Ridge Wallet KickStarter Campaign found at https://www.kickstarter.com/projects/124039987/the-bridge-front-pocket-wallet, January, 2013.

If you wish to add additional non-patent literature document citation information please click the Add button Add

EXAMINER SIGNATURE

Examiner Signature		Date Considered	

*EXAMINER: Initial if reference considered, whether or not citation is in conformance with MPEP 609. Draw line through a citation if not in conformance and not considered. Include copy of this form with next communication to applicant.

[1] See Kind Codes of USPTO Patent Documents at www.USPTO.GOV or MPEP 901.04. [2] Enter office that issued the document, by the two-letter code (WIPO Standard ST.3). [3] For Japanese patent documents, the indication of the year of the reign of the Emperor must precede the serial number of the patent document. [4] Kind of document by the appropriate symbols as indicated on the document under WIPO Standard ST.16 if possible. [5] Applicant is to place a check mark here if English language translation is attached.

INFORMATION DISCLOSURE STATEMENT BY APPLICANT (Not for submission under 37 CFR 1.99)	Application Number	14706019
	Filing Date	2015-05-07
	First Named Inventor	Daniel Kane
	Art Unit	3781
	Examiner Name	Tri Mai
	Attorney Docket Number	

CERTIFICATION STATEMENT

Please see 37 CFR 1.97 and 1.98 to make the appropriate selection(s):

That each item of information contained in the information disclosure statement was first cited in any communication from a foreign patent office in a counterpart foreign application not more than three months prior to the filing of the information disclosure statement. See 37 CFR 1.97(e)(1).

OR

☐ That no item of information contained in the information disclosure statement was cited in a communication from a foreign patent office in a counterpart foreign application, and, to the knowledge of the person signing the certification after making reasonable inquiry, no item of information contained in the information disclosure statement was known to any individual designated in 37 CFR 1.56(c) more than three months prior to the filing of the information disclosure statement. See 37 CFR 1.97(e)(2).

See attached certification statement.

The fee set forth in 37 CFR 1.17 (p) has been submitted herewith.

☒ A certification statement is not submitted herewith.

SIGNATURE

A signature of the applicant or representative is required in accordance with CFR 1.33, 10.18. Please see CFR 1.4(d) for the form of the signature.

Signature	/Lyman Smith/	Date (YYYY-MM-DD)	2018-05-16
Name/Print	Lyman Smith	Registration Number	44342

This collection of information is required by 37 CFR 1.97 and 1.98. The information is required to obtain or retain a benefit by the public which is to file (and by the USPTO to process) an application. Confidentiality is governed by 35 U.S.C. 122 and 37 CFR 1.14. This collection is estimated to take 1 hour to complete, including gathering, preparing and submitting the completed application form to the USPTO. Time will vary depending upon the individual case. Any comments on the amount of time you require to complete this form and/or suggestions for reducing this burden, should be sent to the Chief Information Officer, U.S. Patent and Trademark Office, U.S. Department of Commerce, P.O. Box 1450, Alexandria, VA 22313-1450. DO NOT SEND FEES OR COMPLETED FORMS TO THIS ADDRESS. **SEND TO: Commissioner for Patents, P.O. Box 1450, Alexandria, VA 22313-1450.**

Privacy Act Statement

The Privacy Act of 1974 (P.L. 93-579) requires that you be given certain information in connection with your submission of the attached form related to a patent application or patent. Accordingly, pursuant to the requirements of the Act, please be advised that: (1) the general authority for the collection of this information is 35 U.S.C. 2(b)(2); (2) furnishing of the information solicited is voluntary; and (3) the principal purpose for which the information is used by the U.S. Patent and Trademark Office is to process and/or examine your submission related to a patent application or patent. If you do not furnish the requested information, the U.S. Patent and Trademark Office may not be able to process and/or examine your submission, which may result in termination of proceedings or abandonment of the application or expiration of the patent.

The information provided by you in this form will be subject to the following routine uses:

1. The information on this form will be treated confidentially to the extent allowed under the Freedom of Information Act (5 U.S.C. 552) and the Privacy Act (5 U.S.C. 552a). Records from this system of records may be disclosed to the Department of Justice to determine whether the Freedom of Information Act requires disclosure of these record s.

2. A record from this system of records may be disclosed, as a routine use, in the course of presenting evidence to a court, magistrate, or administrative tribunal, including disclosures to opposing counsel in the course of settlement negotiations.

3. A record in this system of records may be disclosed, as a routine use, to a Member of Congress submitting a request involving an individual, to whom the record pertains, when the individual has requested assistance from the Member with respect to the subject matter of the record.

4. A record in this system of records may be disclosed, as a routine use, to a contractor of the Agency having need for the information in order to perform a contract. Recipients of information shall be required to comply with the requirements of the Privacy Act of 1974, as amended, pursuant to 5 U.S.C. 552a(m).

5. A record related to an International Application filed under the Patent Cooperation Treaty in this system of records may be disclosed, as a routine use, to the International Bureau of the World Intellectual Property Organization, pursuant to the Patent Cooperation Treaty.

6. A record in this system of records may be disclosed, as a routine use, to another federal agency for purposes of National Security review (35 U.S.C. 181) and for review pursuant to the Atomic Energy Act (42 U.S.C. 218(c)).

7. A record from this system of records may be disclosed, as a routine use, to the Administrator, General Services, or his/her designee, during an inspection of records conducted by GSA as part of that agency's responsibility to recommend improvements in records management practices and programs, under authority of 44 U.S.C. 2904 and 2906. Such disclosure shall be made in accordance with the GSA regulations governing inspection of records for this purpose, and any other relevant (i.e., GSA or Commerce) directive. Such disclosure shall not be used to make determinations about individuals.

8. A record from this system of records may be disclosed, as a routine use, to the public after either publication of the application pursuant to 35 U.S.C. 122(b) or issuance of a patent pursuant to 35 U.S.C. 151. Further, a record may be disclosed, subject to the limitations of 37 CFR 1.14, as a routine use, to the public if the record was filed in an application which became abandoned or in which the proceedings were terminated and which application is referenced by either a published application, an application open to public inspections or an issued patent.

9. A record from this system of records may be disclosed, as a routine use, to a Federal, State, or local law enforcement agency, if the USPTO becomes aware of a violation or potential violation of law or regulation.

Electronic Acknowledgement Receipt

EFS ID:	32646531
Application Number:	14706019
International Application Number:	
Confirmation Number:	1677
Title of Invention:	COMPACT WALLET
First Named Inventor/Applicant Name:	Daniel Kane
Customer Number:	25957
Filer:	Lyman H Smith
Filer Authorized By:	
Attorney Docket Number:	15050 XP
Receipt Date:	16-MAY-2018
Filing Date:	07-MAY-2015
Time Stamp:	20:35:27
Application Type:	Utility under 35 USC 111(a)

Payment information:

Submitted with Payment	yes
Payment Type	CARD
Payment was successfully received in RAM	$750
RAM confirmation Number	051718INTEFSW20364801
Deposit Account	
Authorized User	

The Director of the USPTO is hereby authorized to charge indicated fees and credit any overpayment as follows:

File Listing:

Document Number	Document Description	File Name	File Size(Bytes)/ Message Digest	Multi Part /.zip	Pages (if appl.)
1		ReplyfOA_Kane.pdf	114849 6a8a358f33e2890476e009499a701cf837006c62	yes	5

Multipart Description/PDF files in .zip description

Document Description	Start	End
Amendment Submitted/Entered with Filing of CPA/RCE	1	1
Claims	2	3
Applicant Arguments/Remarks Made in an Amendment	4	5

Warnings:

Information:

2	Request for Continued Examination (RCE)	sb0030efs-RCE.pdf	1349830 bd98e1ca8086181a8ad0f92d6d761c03080be854	no	3

Warnings:

Information:

3	Information Disclosure Statement (IDS) Form (SB08)	updated_IDS.pdf	1034261 d7f53beba2a7325511a4a3e5ad14a4aa5a6f28d2	no	4

Warnings:

Information:

A U.S. Patent Number Citation or a U.S. Publication Number Citation is required in the Information Disclosure Statement (IDS) form for autoloading of data into USPTO systems. You may remove the form to add the required data in order to correct the Informational Message if you are citing U.S. References. If you chose not to include U.S. References, the image of the form will be processed and be made available within the Image File Wrapper (IFW) system. However, no data will be extracted from this form. Any additional data such as Foreign Patent Documents or Non Patent Literature will be manually reviewed and keyed into USPTO systems.

4	Non Patent Literature	NPL-Kickstarter.pdf	1648133 1c0109ffc26dd32c979bbba0c84522cdb5f64584	no	28

Warnings:

Information:

5	Fee Worksheet (SB06)	fee-info.pdf	31855 2244cf32630ee282c14f36b229280f1b3d74634b	no	2

Warnings:

Information:

Total Files Size (in bytes):	4178928

This Acknowledgement Receipt evidences receipt on the noted date by the USPTO of the indicated documents, characterized by the applicant, and including page counts, where applicable. It serves as evidence of receipt similar to a Post Card, as described in MPEP 503.

New Applications Under 35 U.S.C. 111
If a new application is being filed and the application includes the necessary components for a filing date (see 37 CFR 1.53(b)-(d) and MPEP 506), a Filing Receipt (37 CFR 1.54) will be issued in due course and the date shown on this Acknowledgement Receipt will establish the filing date of the application.
National Stage of an International Application under 35 U.S.C. 371
If a timely submission to enter the national stage of an international application is compliant with the conditions of 35 U.S.C. 371 and other applicable requirements a Form PCT/DO/EO/903 indicating acceptance of the application as a national stage submission under 35 U.S.C. 371 will be issued in addition to the Filing Receipt, in due course.
New International Application Filed with the USPTO as a Receiving Office
If a new international application is being filed and the international application includes the necessary components for an international filing date (see PCT Article 11 and MPEP 1810), a Notification of the International Application Number and of the International Filing Date (Form PCT/RO/105) will be issued in due course, subject to prescriptions concerning national security, and the date shown on this Acknowledgement Receipt will establish the international filing date of the application.

PTO/SB/30EFS (07-14)
Approved for use through 07/31/2016. OMB 0651-0031
U.S. Patent and Trademark Office; U.S. DEPARTMENT OF COMMERCE
Under the Paperwork Reduction Act of 1995, no persons are required to respond to a collection of information unless it contains a valid OMB control number.

REQUEST FOR CONTINUED EXAMINATION(RCE)TRANSMITTAL
(Submitted Only via EFS-Web)

Application Number	14706019	Filing Date	2015-05-07	Docket Number (if applicable)		Art Unit	3781
First Named Inventor	Daniel Kane			Examiner Name	Tri Mai		

This is a Request for Continued Examination (RCE) under 37 CFR 1.114 of the above-identified application.
Request for Continued Examination (RCE) practice under 37 CFR 1.114 does not apply to any utility or plant application filed prior to June 8, 1995, to any international application that does not comply with the requirements of 35 U.S.C. 371, or to any design application. The Instruction Sheet for this form is located at WWW.USPTO.GOV.

SUBMISSION REQUIRED UNDER 37 CFR 1.114

Note: If the RCE is proper, any previously filed unentered amendments and amendments enclosed with the RCE will be entered in the order in which they were filed unless applicant instructs otherwise. If applicant does not wish to have any previously filed unentered amendment(s) entered, applicant must request non-entry of such amendment(s).

☐ Previously submitted. If a final Office action is outstanding, any amendments filed after the final Office action may be considered as a submission even if this box is not checked.

- ☐ Consider the arguments in the Appeal Brief or Reply Brief previously filed on _____
- ☐ Other _____

☒ Enclosed

- ☒ Amendment/Reply
- ☒ Information Disclosure Statement (IDS)
- ☐ Affidavit(s)/ Declaration(s)
- ☐ Other _____

MISCELLANEOUS

☐ Suspension of action on the above-identified application is requested under 37 CFR 1.103(c) for a period of months _____
(Period of suspension shall not exceed 3 months; Fee under 37 CFR 1.17(i) required)

☐ Other _____

FEES

☒ **The RCE fee under 37 CFR 1.17(e) is required by 37 CFR 1.114 when the RCE is filed.**
The Director is hereby authorized to charge any underpayment of fees, or credit any overpayments, to Deposit Account No 505200

SIGNATURE OF APPLICANT, ATTORNEY, OR AGENT REQUIRED

☒ Patent Practitioner Signature

Applicant Signature

PTO/SB/30EFS (07-14)
Approved for use through 07/31/2016. OMB 0651-0031
U.S. Patent and Trademark Office; U.S. DEPARTMENT OF COMMERCE

Under the Paperwork Reduction Act of 1995, no persons are required to respond to a collection of information unless it contains a valid OMB control number.

Signature of Registered U.S. Patent Practitioner			
Signature	/Lyman Smith/	Date (YYYY-MM-DD)	2018-05-16
Name	Lyman Smith	Registration Number	44342

This collection of information is required by 37 CFR 1.114. The information is required to obtain or retain a benefit by the public which is to file (and by the USPTO to process) an application. Confidentiality is governed by 35 U.S.C. 122 and 37 CFR 1.11 and 1.14. This collection is estimated to take 12 minutes to complete, including gathering, preparing, and submitting the completed application form to the USPTO. Time will vary depending upon the individual case. Any comments on the amount of time you require to complete this form and/or suggestions for reducing this burden, should be sent to the Chief Information Officer, U.S. Patent and Trademark Office, U.S. Department of Commerce, P.O. Box 1450, Alexandria, VA 22313-1450.

If you need assistance in completing the form, call 1-800-PTO-9199 and select option 2.

Privacy Act Statement

The Privacy Act of 1974 (P.L. 93-579) requires that you be given certain information in connection with your submission of the attached form related to a patent application or patent. Accordingly, pursuant to the requirements of the Act, please be advised that: (1) the general authority for the collection of this information is 35 U.S.C. 2(b)(2); (2) furnishing of the information solicited is voluntary; and (3) the principal purpose for which the information is used by the U.S. Patent and Trademark Office is to process and/or examine your submission related to a patent application or patent. If you do not furnish the requested information, the U.S. Patent and Trademark Office may not be able to process and/or examine your submission, which may result in termination of proceedings or abandonment of the application or expiration of the patent.

The information provided by you in this form will be subject to the following routine uses:

1. The information on this form will be treated confidentially to the extent allowed under the Freedom of Information Act (5 U.S.C. 552) and the Privacy Act (5 U.S.C. 552a). Records from this system of records may be disclosed to the Department of Justice to determine whether the Freedom of Information Act requires disclosure of these records.

2. A record from this system of records may be disclosed, as a routine use, in the course of presenting evidence to a court, magistrate, or administrative tribunal, including disclosures to opposing counsel in the course of settlement negotiations.

3. A record in this system of records may be disclosed, as a routine use, to a Member of Congress submitting a request involving an individual, to whom the record pertains, when the individual has requested assistance from the Member with respect to the subject matter of the record.

4. A record in this system of records may be disclosed, as a routine use, to a contractor of the Agency having need for the information in order to perform a contract. Recipients of information shall be required to comply with the requirements of the Privacy Act of 1974, as amended, pursuant to 5 U.S.C. 552a(m).

5. A record related to an International Application filed under the Patent Cooperation Treaty in this system of records may be disclosed, as a routine use, to the International Bureau of the World Intellectual Property Organization, pursuant to the Patent Cooperation Treaty.

6. A record in this system of records may be disclosed, as a routine use, to another federal agency for purposes of National Security review (35 U.S.C. 181) and for review pursuant to the Atomic Energy Act (42 U.S.C. 218(c)).

7. A record from this system of records may be disclosed, as a routine use, to the Administrator, General Services, or his/her designee, during an inspection of records conducted by GSA as part of that agency's responsibility to recommend improvements in records management practices and programs, under authority of 44 U.S.C. 2904 and 2906. Such disclosure shall be made in accordance with the GSA regulations governing inspection of records for this purpose, and any other relevant (i.e., GSA or Commerce) directive. Such disclosure shall not be used to make determinations about individuals.

8. A record from this system of records may be disclosed, as a routine use, to the public after either publication of the application pursuant to 35 U.S.C. 122(b) or issuance of a patent pursuant to 35 U.S.C. 151. Further, a record may be disclosed, subject to the limitations of 37 CFR 1.14, as a routine use, to the public if the record was filed in an application which became abandoned or in which the proceedings were terminated and which application is referenced by either a published application, an application open to public inspections or an issued patent.

9. A record from this system of records may be disclosed, as a routine use, to a Federal, State, or local law enforcement agency, if the USPTO becomes aware of a violation or potential violation of law or regulation.

REMARKS/ARGUMENTS

Status of Claims

Claims 1-11, 13, 14 and 16-20 were pending. Claims 1-11, 13, 14 and 16-18 are rejected. Claims 12, 15 and 16 were canceled previously without prejudice or disclaimer of subject matter. Claims 1-3, 9, 10, 14, 17 and 18 are canceled without prejudice or disclaimer of subject matter. Claims 19 and 20 are allowed.

Amendment of Claims

Each of the currently pending dependent claims are amended to dependent upon allowed claim 19.

No new matter is added.

Claim Rejections

Minn

Claims 1, 6, 7, 11, 14 and 18 stand rejected under 35 USC 102 as being anticipated by Minn (US 9,125464). Without acquiescing to the merits of the rejection, Applicant submits that this rejection is moot with respect to canceled claims 1, 14 and 18. Claims 6, 7, and 11 have been amended to depend from allowable claim 19 and, accordingly, should themselves be allowable.

Accordingly, reconsideration and withdrawal of the rejection of claims 1, 6, 7, 11, 14 and 18 as being anticipated by Minn is respectfully requested.

Minn and Coates and Podwika

Claims 1-11, 13, 14 and 17 stand rejected under 35 USC 103 as being unpatentable over Minn in view of Coates (US 7,527,081) further in view of Podwika (US 5,944,080). Without acquiescing to the merits of the rejection, Applicant submits that this rejection is moot with respect to canceled claims 1, 2, 3, 9, 10, 14 and 17. Claims 4-8, 11 and 13 have been amended to depend from allowable claim 19 and, accordingly, should themselves be allowable.

SHENZHEN PINCAN Exhibit 1017 Page 122

Accordingly, reconsideration and withdrawal of the rejection of claims 1-11, 13, 14 and 17 as being unpatentable over Minn in view of Coates, further in view of Podwika, is respectfully requested.

Mariano and Andrews

Claims 14, 17 and 18 stand rejected under 35 USC 103 as being unpatentable over Mariano (US 2,232,461) in view of Andrews (11,348). Without acquiescing to the merits of the rejection, Applicant submits that this rejection is moot with respect to canceled claims 14, 17 and 18.

Accordingly, reconsideration and withdrawal of the rejection of claims 14, 17 and 18 as being unpatentable over Mariano in view of Andrews is respectfully requested.

CONCLUSION

Reconsideration and withdrawal of the Office Action with respect to the pending claims is requested. Applicant submits that the claims are now in condition for allowance. Early notice to that end is respectfully solicited.

In the event the examiner wishes to discuss any aspect of this response, please contact the attorney at the telephone number identified below.

Respectfully submitted,

/Lyman Smith/

Lyman Smith
Registration No. 44,342

Patent Service Associates, Inc.
18702 Van Nuys Circle
Port Charlotte, FL 33948
336-510-8799

SHENZHEN PINCAN Exhibit 1017 Page 123

PTO/SB/06 (09-11)
Approved for use through 1/31/2014. OMB 0651-0032
U.S. Patent and Trademark Office; U.S. DEPARTMENT OF COMMERCE
Under the Paperwork Reduction Act of 1995, no persons are required to respond to a collection of information unless it displays a valid OMB control number.

PATENT APPLICATION FEE DETERMINATION RECORD

Substitute for Form PTO-875

Application or Docket Number	Filing Date	
14/706,019	05/07/2015	☐ To be Mailed

ENTITY: ☐ LARGE ☒ SMALL ☐ MICRO

APPLICATION AS FILED – PART I

FOR	(Column 1) NUMBER FILED	(Column 2) NUMBER EXTRA	RATE ($)	FEE ($)
☐ BASIC FEE (37 CFR 1.16(a), (b), or (c))	N/A	N/A	N/A	
☐ SEARCH FEE (37 CFR 1.16(k), (i), or (m))	N/A	N/A	N/A	
☐ EXAMINATION FEE (37 CFR 1.16(o), (p), or (q))	N/A	N/A	N/A	
TOTAL CLAIMS (37 CFR 1.16(i))	minus 20 =	*	x $ =	
INDEPENDENT CLAIMS (37 CFR 1.16(h))	minus 3 =	*	x $ =	
☐ APPLICATION SIZE FEE (37 CFR 1.16(s))	If the specification and drawings exceed 100 sheets of paper, the application size fee due is $310 ($155 for small entity) for each additional 50 sheets or fraction thereof. See 35 U.S.C. 41(a)(1)(G) and 37 CFR 1.16(s).			
☐ MULTIPLE DEPENDENT CLAIM PRESENT (37 CFR 1.16(j))				
* If the difference in column 1 is less than zero, enter "0" in column 2.			TOTAL	

APPLICATION AS AMENDED – PART II

AMENDMENT

05/16/2018	(Column 1) CLAIMS REMAINING AFTER AMENDMENT		(Column 2) HIGHEST NUMBER PREVIOUSLY PAID FOR	(Column 3) PRESENT EXTRA	RATE ($)	ADDITIONAL FEE ($)
Total (37 CFR 1.16(i))	* 8	Minus	** 20	= 0	x $50 =	0
Independent (37 CFR 1.16(h))	* 1	Minus	***3	= 0	x $230 =	0
☐ Application Size Fee (37 CFR 1.16(s))						
☐ FIRST PRESENTATION OF MULTIPLE DEPENDENT CLAIM (37 CFR 1.16(j))						
					TOTAL ADD'L FEE	0

AMENDMENT

	(Column 1) CLAIMS REMAINING AFTER AMENDMENT		(Column 2) HIGHEST NUMBER PREVIOUSLY PAID FOR	(Column 3) PRESENT EXTRA	RATE ($)	ADDITIONAL FEE ($)
Total (37 CFR 1.16(i))	*	Minus	**	=	x $ =	
Independent (37 CFR 1.16(h))	*	Minus	***	=	x $ =	
☐ Application Size Fee (37 CFR 1.16(s))						
☐ FIRST PRESENTATION OF MULTIPLE DEPENDENT CLAIM (37 CFR 1.16(j))						
					TOTAL ADD'L FEE	

* If the entry in column 1 is less than the entry in column 2, write "0" in column 3.
** If the "Highest Number Previously Paid For" IN THIS SPACE is less than 20, enter "20".
*** If the "Highest Number Previously Paid For" IN THIS SPACE is less than 3, enter "3".
The "Highest Number Previously Paid For" (Total or Independent) is the highest number found in the appropriate box in column 1.

LIE
LASHAWN MORGAN

This collection of information is required by 37 CFR 1.16. The information is required to obtain or retain a benefit by the public which is to file (and by the USPTO to process) an application. Confidentiality is governed by 35 U.S.C. 122 and 37 CFR 1.14. This collection is estimated to take 12 minutes to complete, including gathering, preparing, and submitting the completed application form to the USPTO. Time will vary depending upon the individual case. Any comments on the amount of time you require to complete this form and/or suggestions for reducing this burden, should be sent to the Chief Information Officer, U.S. Patent and Trademark Office, U.S. Department of Commerce, P.O. Box 1450, Alexandria, VA 22313-1450. DO NOT SEND FEES OR COMPLETED FORMS TO THIS ADDRESS. **SEND TO: Commissioner for Patents, P.O. Box 1450, Alexandria, VA 22313-1450.**
If you need assistance in completing the form, call 1-800-PTO-9199 and select option 2.

Electronic Patent Application Fee Transmittal

Application Number:	14706019
Filing Date:	07-May-2015
Title of Invention:	COMPACT WALLET
First Named Inventor/Applicant Name:	Daniel Kane
Filer:	Lyman H Smith
Attorney Docket Number:	15050 XP

Filed as Small Entity

Filing Fees for Utility under 35 USC 111(a)

Description	Fee Code	Quantity	Amount	Sub-Total in USD($)
Basic Filing:				
Pages:				
Claims:				
Miscellaneous-Filing:				
Petition:				
Patent-Appeals-and-Interference:				
Post-Allowance-and-Post-Issuance:				
Extension-of-Time:				

Description	Fee Code	Quantity	Amount	Sub-Total in USD($)
Extension - 1 month with $0 paid	2251	1	100	100
Miscellaneous:				
RCE- 1ST REQUEST	2801	1	650	650
		Total in USD ($)		**750**

Notice of References Cited	Application/Control No. 14/706,019	Applicant(s)/Patent Under Reexamination KANE, DANIEL	
	Examiner TRI MAI	Art Unit 3781	Page 1 of 1

U.S. PATENT DOCUMENTS

*		Document Number Country Code-Number-Kind Code	Date MM-YYYY	Name	CPC Classification	US Classification
	A	US-				
	B	US-				
	C	US-				
	D	US-				
	E	US-				
	F	US-				
	G	US-				
	H	US-				
	I	US-				
	J	US-				
	K	US-				
	L	US-				
	M	US-				

FOREIGN PATENT DOCUMENTS

*		Document Number Country Code-Number-Kind Code	Date MM-YYYY	Country	Name	CPC Classification
	N					
	O					
	P					
	Q					
	R					
	S					
	T					

NON-PATENT DOCUMENTS

*		Include as applicable: Author, Title Date, Publisher, Edition or Volume, Pertinent Pages)
	U	The Ridge Wallet 2, https://www.kickstarter.com/projects/124039987/the-ridge-wallet-20, 36 pages.
	V	
	W	
	X	

*A copy of this reference is not being furnished with this Office action. (See MPEP § 707.05(a).)
Dates in MM-YYYY format are publication dates. Classifications may be US or foreign.

Doc code: IDS
Doc description: Information Disclosure Statement (IDS) Filed

PTO/SB/08a (02-18)
Approved for use through 11/30/2020. OMB 0651-0031
U.S. Patent and Trademark Office; U.S. DEPARTMENT OF COMMERCE
Under the Paperwork Reduction Act of 1995, no persons are required to respond to a collection of information unless it contains a valid OMB control number.

INFORMATION DISCLOSURE STATEMENT BY APPLICANT

(Not for submission under 37 CFR 1.99)

Application Number	14706019
Filing Date	2015-05-07
First Named Inventor	Daniel Kane
Art Unit	3781
Examiner Name	Tri Mai
Attorney Docket Number	

U.S.PATENTS Remove

Examiner Initial*	Cite No	Patent Number	Kind Code[1]	Issue Date	Name of Patentee or Applicant of cited Document	Pages,Columns,Lines where Relevant Passages or Relevant Figures Appear
	1					

If you wish to add additional U.S. Patent citation information please click the Add button. Add

U.S.PATENT APPLICATION PUBLICATIONS Remove

Examiner Initial*	Cite No	Publication Number	Kind Code[1]	Publication Date	Name of Patentee or Applicant of cited Document	Pages,Columns,Lines where Relevant Passages or Relevant Figures Appear
	1					

If you wish to add additional U.S. Published Application citation information please click the Add button. Add

FOREIGN PATENT DOCUMENTS Remove

Examiner Initial*	Cite No	Foreign Document Number[3]	Country Code[2] i	Kind Code[4]	Publication Date	Name of Patentee or Applicant of cited Document	Pages,Columns,Lines where Relevant Passages or Relevant Figures Appear	T[5]
	1							

If you wish to add additional Foreign Patent Document citation information please click the Add button Add

NON-PATENT LITERATURE DOCUMENTS Remove

Examiner Initials*	Cite No	Include name of the author (in CAPITAL LETTERS), title of the article (when appropriate), title of the item (book, magazine, journal, serial, symposium, catalog, etc), date, pages(s), volume-issue number(s), publisher, city and/or country where published.	T[5]

ALL REFERENCES CONSIDERED EXCEPT WHERE LINED THROUGH. /T.M.M/

INFORMATION DISCLOSURE STATEMENT BY APPLICANT (Not for submission under 37 CFR 1.99)		
	Application Number	14706019
	Filing Date	2015-05-07
	First Named Inventor	Daniel Kane
	Art Unit	3781
	Examiner Name	Tri Mai
	Attorney Docket Number	

	1	Ridge Wallet KickStarter Campaign found at https://www.kickstarter.com/projects/124039987/the-bridge-front-pocket-wallet, January, 2013.	

If you wish to add additional non-patent literature document citation information please click the Add button Add

EXAMINER SIGNATURE

Examiner Signature	/TRI M MAI/	Date Considered	05/25/2018

*EXAMINER: Initial if reference considered, whether or not citation is in conformance with MPEP 609. Draw line through a citation if not in conformance and not considered. Include copy of this form with next communication to applicant.

[1] See Kind Codes of USPTO Patent Documents at www.USPTO.GOV or MPEP 901.04. [2] Enter office that issued the document, by the two-letter code (WIPO Standard ST.3). [3] For Japanese patent documents, the indication of the year of the reign of the Emperor must precede the serial number of the patent document. [4] Kind of document by the appropriate symbols as indicated on the document under WIPO Standard ST.16 if possible. [5] Applicant is to place a check mark here if English language translation is attached.

ALL REFERENCES CONSIDERED EXCEPT WHERE LINED THROUGH. /T.M.M/

INFORMATION DISCLOSURE STATEMENT BY APPLICANT

(Not for submission under 37 CFR 1.99)

Application Number	14706019
Filing Date	2015-05-07
First Named Inventor	Daniel Kane
Art Unit	3781
Examiner Name	Tri Mai
Attorney Docket Number	

CERTIFICATION STATEMENT

Please see 37 CFR 1.97 and 1.98 to make the appropriate selection(s):

That each item of information contained in the information disclosure statement was first cited in any communication from a foreign patent office in a counterpart foreign application not more than three months prior to the filing of the information disclosure statement. See 37 CFR 1.97(e)(1).

OR

☐ That no item of information contained in the information disclosure statement was cited in a communication from a foreign patent office in a counterpart foreign application, and, to the knowledge of the person signing the certification after making reasonable inquiry, no item of information contained in the information disclosure statement was known to any individual designated in 37 CFR 1.56(c) more than three months prior to the filing of the information disclosure statement. See 37 CFR 1.97(e)(2).

See attached certification statement.

The fee set forth in 37 CFR 1.17 (p) has been submitted herewith.

☒ A certification statement is not submitted herewith.

SIGNATURE

A signature of the applicant or representative is required in accordance with CFR 1.33, 10.18. Please see CFR 1.4(d) for the form of the signature.

Signature	/Lyman Smith/	Date (YYYY-MM-DD)	2018-05-16
Name/Print	Lyman Smith	Registration Number	44342

This collection of information is required by 37 CFR 1.97 and 1.98. The information is required to obtain or retain a benefit by the public which is to file (and by the USPTO to process) an application. Confidentiality is governed by 35 U.S.C. 122 and 37 CFR 1.14. This collection is estimated to take 1 hour to complete, including gathering, preparing and submitting the completed application form to the USPTO. Time will vary depending upon the individual case. Any comments on the amount of time you require to complete this form and/or suggestions for reducing this burden, should be sent to the Chief Information Officer, U.S. Patent and Trademark Office, U.S. Department of Commerce, P.O. Box 1450, Alexandria, VA 22313-1450. DO NOT SEND FEES OR COMPLETED FORMS TO THIS ADDRESS. **SEND TO: Commissioner for Patents, P.O. Box 1450, Alexandria, VA 22313-1450.**

ALL REFERENCES CONSIDERED EXCEPT WHERE LINED THROUGH. /T.M.M/

Privacy Act Statement

The Privacy Act of 1974 (P.L. 93-579) requires that you be given certain information in connection with your submission of the attached form related to a patent application or patent. Accordingly, pursuant to the requirements of the Act, please be advised that: (1) the general authority for the collection of this information is 35 U.S.C. 2(b)(2); (2) furnishing of the information solicited is voluntary; and (3) the principal purpose for which the information is used by the U.S. Patent and Trademark Office is to process and/or examine your submission related to a patent application or patent. If you do not furnish the requested information, the U.S. Patent and Trademark Office may not be able to process and/or examine your submission, which may result in termination of proceedings or abandonment of the application or expiration of the patent.

The information provided by you in this form will be subject to the following routine uses:

1. The information on this form will be treated confidentially to the extent allowed under the Freedom of Information Act (5 U.S.C. 552) and the Privacy Act (5 U.S.C. 552a). Records from this system of records may be disclosed to the Department of Justice to determine whether the Freedom of Information Act requires disclosure of these record s.

2. A record from this system of records may be disclosed, as a routine use, in the course of presenting evidence to a court, magistrate, or administrative tribunal, including disclosures to opposing counsel in the course of settlement negotiations.

3. A record in this system of records may be disclosed, as a routine use, to a Member of Congress submitting a request involving an individual, to whom the record pertains, when the individual has requested assistance from the Member with respect to the subject matter of the record.

4. A record in this system of records may be disclosed, as a routine use, to a contractor of the Agency having need for the information in order to perform a contract. Recipients of information shall be required to comply with the requirements of the Privacy Act of 1974, as amended, pursuant to 5 U.S.C. 552a(m).

5. A record related to an International Application filed under the Patent Cooperation Treaty in this system of records may be disclosed, as a routine use, to the International Bureau of the World Intellectual Property Organization, pursuant to the Patent Cooperation Treaty.

6. A record in this system of records may be disclosed, as a routine use, to another federal agency for purposes of National Security review (35 U.S.C. 181) and for review pursuant to the Atomic Energy Act (42 U.S.C. 218(c)).

7. A record from this system of records may be disclosed, as a routine use, to the Administrator, General Services, or his/her designee, during an inspection of records conducted by GSA as part of that agency's responsibility to recommend improvements in records management practices and programs, under authority of 44 U.S.C. 2904 and 2906. Such disclosure shall be made in accordance with the GSA regulations governing inspection of records for this purpose, and any other relevant (i.e., GSA or Commerce) directive. Such disclosure shall not be used to make determinations about individuals.

8. A record from this system of records may be disclosed, as a routine use, to the public after either publication of the application pursuant to 35 U.S.C. 122(b) or issuance of a patent pursuant to 35 U.S.C. 151. Further, a record may be disclosed, subject to the limitations of 37 CFR 1.14, as a routine use, to the public if the record was filed in an application which became abandoned or in which the proceedings were terminated and which application is referenced by either a published application, an application open to public inspections or an issued patent.

9. A record from this system of records may be disclosed, as a routine use, to a Federal, State, or local law enforcement agency, if the USPTO becomes aware of a violation or potential violation of law or regulation.

ALL REFERENCES CONSIDERED EXCEPT WHERE LINED THROUGH. /T.M.M/

UNITED STATES PATENT AND TRADEMARK OFFICE

UNITED STATES DEPARTMENT OF COMMERCE
United States Patent and Trademark Office
Address: COMMISSIONER FOR PATENTS
P.O. Box 1450
Alexandria, Virginia 22313-1450
www.uspto.gov

APPLICATION NO.	FILING DATE	FIRST NAMED INVENTOR	ATTORNEY DOCKET NO.	CONFIRMATION NO.
14/706,019	05/07/2015	Daniel Kane	15050 XP	1677

25957 7590 05/31/2018
LAWRENCE E. LAMBELET JR.
7548 Caprio Dr
Boynton Beach, FL 33472

EXAMINER
MAI, TRI M

ART UNIT	PAPER NUMBER
3781	

NOTIFICATION DATE	DELIVERY MODE
05/31/2018	ELECTRONIC

Please find below and/or attached an Office communication concerning this application or proceeding.

The time period for reply, if any, is set in the attached communication.

Notice of the Office communication was sent electronically on above-indicated "Notification Date" to the following e-mail address(es):

agent@xpertpatents.com
dockets@walsh-ip.com
pwalsh@walsh-ip.com

Office Action Summary	Application No. 14/706,019	Applicant(s) KANE, DANIEL	
	Examiner TRI MAI	Art Unit 3781	AIA (First Inventor to File) Status Yes

-- The MAILING DATE of this communication appears on the cover sheet with the correspondence address --

Period for Reply

A SHORTENED STATUTORY PERIOD FOR REPLY IS SET TO EXPIRE 3 MONTHS FROM THE MAILING DATE OF THIS COMMUNICATION.

- Extensions of time may be available under the provisions of 37 CFR 1.136(a). In no event, however, may a reply be timely filed after SIX (6) MONTHS from the mailing date of this communication.
- If NO period for reply is specified above, the maximum statutory period will apply and will expire SIX (6) MONTHS from the mailing date of this communication.
- Failure to reply within the set or extended period for reply will, by statute, cause the application to become ABANDONED (35 U.S.C. § 133). Any reply received by the Office later than three months after the mailing date of this communication, even if timely filed, may reduce any earned patent term adjustment. See 37 CFR 1.704(b).

Status

1)☐ Responsive to communication(s) filed on _____.

☐ A declaration(s)/affidavit(s) under **37 CFR 1.130(b)** was/were filed on _____.

2a)☐ This action is **FINAL**. 2b)☒ This action is non-final.

3)☐ An election was made by the applicant in response to a restriction requirement set forth during the interview on _____; the restriction requirement and election have been incorporated into this action.

4)☐ Since this application is in condition for allowance except for formal matters, prosecution as to the merits is closed in accordance with the practice under *Ex parte Quayle*, 1935 C.D. 11, 453 O.G. 213.

Disposition of Claims*

5)☒ Claim(s) *4-8,13,19 and 20* is/are pending in the application.

5a) Of the above claim(s) _____ is/are withdrawn from consideration.

6)☐ Claim(s) _____ is/are allowed.

7)☒ Claim(s) *4-8,13,19 and 20* is/are rejected.

8)☐ Claim(s) _____ is/are objected to.

9)☐ Claim(s) _____ are subject to restriction and/or election requirement.

* If any claims have been determined allowable, you may be eligible to benefit from the **Patent Prosecution Highway** program at a participating intellectual property office for the corresponding application. For more information, please see http://www.uspto.gov/patents/init_events/pph/index.jsp or send an inquiry to PPHfeedback@uspto.gov.

Application Papers

10)☐ The specification is objected to by the Examiner.

11)☐ The drawing(s) filed on _____ is/are: a)☐ accepted or b)☐ objected to by the Examiner.

Applicant may not request that any objection to the drawing(s) be held in abeyance. See 37 CFR 1.85(a).

Replacement drawing sheet(s) including the correction is required if the drawing(s) is objected to. See 37 CFR 1.121(d).

Priority under 35 U.S.C. § 119

12)☐ Acknowledgment is made of a claim for foreign priority under 35 U.S.C. § 119(a)-(d) or (f).

Certified copies:

a)☐ All b)☐ Some** c)☐ None of the:

1.☐ Certified copies of the priority documents have been received.

2.☐ Certified copies of the priority documents have been received in Application No. _____.

3.☐ Copies of the certified copies of the priority documents have been received in this National Stage application from the International Bureau (PCT Rule 17.2(a)).

** See the attached detailed Office action for a list of the certified copies not received.

Attachment(s)

1) ☒ Notice of References Cited (PTO-892)

2) ☒ Information Disclosure Statement(s) (PTO/SB/08a and/or PTO/SB/08b) Paper No(s)/Mail Date _____.

3) ☐ Interview Summary (PTO-413) Paper No(s)/Mail Date. _____ .

4) ☐ Other: _____.

1. The present application, filed on or after March 16, 2013, is being examined under the first inventor to file provisions of the AIA.

2. Claims 4, 6, 7, 8, 13, and 19 are rejected under 35 U.S.C. 102(a)(1) as being anticipated by Kane (Kickstarter, the Ridge Wallet 2.0). Kane teaches a compact wallet with elastic band interposed with at least two metallic rigid plates and a groove, and aligned finger notches. Note the dates on which the Ridge Wallet 2 is publically disclosed at least dated back in August 2013.

3. Claim 5 is rejected under 35 U.S.C. 103 as being unpatentable over Kane. It would have been obvious to one of ordinary skill in the art to provide adhesive to provide an alternative fastening means.

4. Claim 20 is rejected under 35 U.S.C. 103 as being unpatentable over Kane rejection, as set forth in paragraph 2, and further in view of Podwika (5944080) or Lehr (6230878). Podwika teaches that it is known in the art to provide a band on an outer surface. Lehr also teaches a band. It would have been obvious to one of ordinary skill in the art either the band in Podwida or Lehr to provide added holding means.

5. Any inquiry concerning this communication or earlier communications from the examiner should be directed to TRI MAI whose telephone number is (571)272-4541. The examiner can normally be reached on M-F 7 am - 4:00 pm.

Examiner interviews are available via telephone, in-person, and video conferencing using a USPTO supplied web-based collaboration tool. To schedule an interview, applicant is

encouraged to use the USPTO Automated Interview Request (AIR) at http://www.uspto.gov/interviewpractice.

If attempts to reach the examiner by telephone are unsuccessful, the examiner's supervisor, Fenn Mathew can be reached on 571-272-4978. The fax phone number for the organization where this application or proceeding is assigned is 571-273-8300.

Information regarding the status of an application may be obtained from the Patent Application Information Retrieval (PAIR) system. Status information for published applications may be obtained from either Private PAIR or Public PAIR. Status information for unpublished applications is available through Private PAIR only. For more information about the PAIR system, see http://pair-direct.uspto.gov. Should you have questions on access to the Private PAIR system, contact the Electronic Business Center (EBC) at 866-217-9197 (toll-free). If you would like assistance from a USPTO Customer Service Representative or access to the automated information system, call 800-786-9199 (IN USA OR CANADA) or 571-272-1000.

/TRI MAI/
Primary Examiner, Art Unit 3781

Search Notes	Application/Control No.	Applicant(s)/Patent Under Reexamination
	14706019	KANE, DANIEL
	Examiner	**Art Unit**
	TRI MAI	3781

CPC- SEARCHED

Symbol	Date	Examiner
a45c 1/06, 1/08, 11/182, 13/185, 2001/083, 2011/186	7/31/2017	TM

CPC COMBINATION SETS - SEARCHED

Symbol	Date	Examiner

US CLASSIFICATION SEARCHED

Class	Subclass	Date	Examiner

* See search history printout included with this form or the SEARCH NOTES box below to determine the scope of the search.

SEARCH NOTES

Search Notes	Date	Examiner
search updated	1/9/2018	TM
search updated	5/25/2018	TM

INTERFERENCE SEARCH

US Class/ CPC Symbol	US Subclass / CPC Group	Date	Examiner

UNITED STATES PATENT AND TRADEMARK OFFICE
COMMISSIONER FOR PATENTS
P.O.BOX 1450
ALEXANDRIA VA 22313-1451

PRESORTED
FIRST-CLASS MAIL
U.S. POSTAGE PAID
POSTEDIGITAL
NNNNN

LAWRENCE E. LAMBELET JR.
7548 Caprio Dr
Boynton Beach, FL 33472

Courtesy Reminder for
Application Serial No: 14/706,019

Attorney Docket No: 15050 XP
Customer Number: 25957
Date of Electronic Notification: 05/31/2018

This is a courtesy reminder that new correspondence is available for this application. If you have not done so already, please review the correspondence. The official date of notification of the outgoing correspondence will be indicated on the form PTOL-90 accompanying the correspondence.

An email notification regarding the correspondence was sent to the following email address(es) associated with your customer number:

agent@xpertpatents.com
dockets@walsh-ip.com
pwalsh@walsh-ip.com

To view your correspondence online or update your email addresses, please visit us anytime at **https://sportal.uspto.gov/secure/myportal/privatepair.** If you have any questions, please email the Electronic Business Center (EBC) at EBC@uspto.gov or call 1-866-217-9197.

IN THE UNITED STATES PATENT AND TRADEMARK OFFICE

In re Application of: Daniel Kane	Examiner: Tri Mai
Application No.:14/706,019	Group Art Unit: 3781
Date Filed: May 7, 2015	Conf. No.: 1661
Title: COMPACT WALLET	Customer No.: 95490

MS Amendment
Commissioner for Patents
P.O. Box 1450
Alexandria VA 22313-1450

RESPONSE TO OFFICE ACTION

Sir:

In response to the Office Action, please amend the above-identified application as follows. If necessary, the Commissioner is hereby authorized to credit any overpayment or charge payment for any additional fees to Deposit Account No. 50-5200.

Amendments to the Claims are reflected in the listing of claims which begins on page 2 of this paper.

Remarks/Arguments begin on page 5 of this paper.

SHENZHEN PINCAN Exhibit 1017 Page 138

Amendments to the Claims:

This listing of claims will replace all prior versions, and listings, of claims in the application:

Listing of Claims:

1-3. (Canceled)

4. (Currently amended) The compact wallet of claim 19 [[3]], wherein the second lamina is attached to the first lamina by screws.

5. (Currently amended) The compact wallet of claim 19 [[3]], wherein the second lamina is attached to the first lamina by pressure sensitive adhesive means.

6. (Currently amended) The compact wallet of claim 19 [[1]], wherein each rigid plate is comprised of metal for RFID protection.

7. (Currently amended) The compact wallet of claim 19 [[1]], wherein each rigid plate is metalized for RFID protection.

8. (Currently amended) The compact wallet of claim 19 [[3]], wherein at least one of the first or second lamina of each rigid plate is comprised of metal.

9 - 12. (Canceled)

13. (Currently amended) The compact wallet of claim 19 [[1]], wherein the encircling elastic band is comprised of woven elastic fabric.

14 - 18. (Canceled)

SHENZHEN PINCAN Exhibit 1017 Page 139

19. (Currently amended) A compact wallet, comprising:

at least two rigid plates interposed to sandwich card-like contents there between, each rigid plate having a longitudinal extent;

at least one encircling elastic band interposed with the at least two rigid plates along longitudinal extents thereof to bias them inwardly and securely hold the card-like contents while providing elastic volume there between for adding or removing contents;

a groove configured to minimize the profile of the wallet and hold position of the at least one encircling elastic band with respect to each rigid plate while allowing freedom for the dynamic extension and contraction of the band over the entire running length thereof;

a first elastic strap positioned over the ends of the at least two rigid plates transverse to the longitudinal extents, the positioning functioning to retain the card-like contents from that end; and

aligned finger notches through proximal ends of the rigid plates to expose an edge of the card-like contents for the purpose of pushing the edge to elevate the contents into view through distal ends of the rigid plates, said edge providing a fulcrum to lever the proximal ends together for the purpose of fanning the distal ends apart in display of the contents,

wherein the groove is in a first lamina of a laminate construction of each rigid plate, the groove slidingly receiving one part of the at least one encircling elastic band; and

wherein a second lamina of the laminate construction of each rigid plate is removably attached to the first lamina <u>with a screw having male threads mating with female threads formed in the first lamina</u> to capture the at least one elastic band and provide a smooth surface for glide<u>, the second lamina having a plurality of sunken regions surrounding screw holes for receiving a head of the screw therein, wherein the head does not protrude from a plane defined by an exterior surface of the second lamina</u>,

whereby, card-like contents may be carried with minimal silhouette on or with a person while allowing expandable capacity and ready access to individual contents from between the at least two rigid plates.

SHENZHEN PINCAN Exhibit 1017 Page 140

20. (Previously presented) The compact wallet of claim 19, further comprising a second elastic strap positioned over an outside surface of one of the at least two rigid plates to hold additional contents on the outside surface.

SHENZHEN PINCAN Exhibit 1017 Page 141

Electronic Acknowledgement Receipt

EFS ID:	33885869
Application Number:	14706019
International Application Number:	
Confirmation Number:	1677
Title of Invention:	COMPACT WALLET
First Named Inventor/Applicant Name:	Daniel Kane
Customer Number:	25957
Filer:	Lyman H Smith
Filer Authorized By:	
Attorney Docket Number:	15050 XP
Receipt Date:	01-OCT-2018
Filing Date:	07-MAY-2015
Time Stamp:	18:15:18
Application Type:	Utility under 35 USC 111(a)

Payment information:

Submitted with Payment	yes
Payment Type	CARD
Payment was successfully received in RAM	$300
RAM confirmation Number	100218INTEFSW18161600
Deposit Account	505200
Authorized User	Lyman Smith

The Director of the USPTO is hereby authorized to charge indicated fees and credit any overpayment as follows:

37 CFR 1.16 (National application filing, search, and examination fees)

37 CFR 1.17 (Patent application and reexamination processing fees)

File Listing:

Document Number	Document Description	File Name	File Size(Bytes)/ Message Digest	Multi Part /.zip	Pages (if appl.)
1		ReplyOA-RCE-Kane.pdf	140903 d12db3416abd4950568218be42e5c4da369d2864	yes	7

Multipart Description/PDF files in .zip description		
Document Description	**Start**	**End**
Amendment/Req. Reconsideration-After Non-Final Reject	1	1
Claims	2	4
Applicant Arguments/Remarks Made in an Amendment	5	7

Warnings:

Information:

2	Fee Worksheet (SB06)	fee-info.pdf	29985 c29244911b2fa22aa0a9f3d7790273a16bbf6b0d	no	2

Warnings:

Information:

Total Files Size (in bytes):	170888

This Acknowledgement Receipt evidences receipt on the noted date by the USPTO of the indicated documents, characterized by the applicant, and including page counts, where applicable. It serves as evidence of receipt similar to a Post Card, as described in MPEP 503.

New Applications Under 35 U.S.C. 111
If a new application is being filed and the application includes the necessary components for a filing date (see 37 CFR 1.53(b)-(d) and MPEP 506), a Filing Receipt (37 CFR 1.54) will be issued in due course and the date shown on this Acknowledgement Receipt will establish the filing date of the application.
National Stage of an International Application under 35 U.S.C. 371
If a timely submission to enter the national stage of an international application is compliant with the conditions of 35 U.S.C. 371 and other applicable requirements a Form PCT/DO/EO/903 indicating acceptance of the application as a national stage submission under 35 U.S.C. 371 will be issued in addition to the Filing Receipt, in due course.
New International Application Filed with the USPTO as a Receiving Office
If a new international application is being filed and the international application includes the necessary components for an international filing date (see PCT Article 11 and MPEP 1810), a Notification of the International Application Number and of the International Filing Date (Form PCT/RO/105) will be issued in due course, subject to prescriptions concerning national security, and the date shown on this Acknowledgement Receipt will establish the international filing date of the application.

REMARKS/ARGUMENTS

Status of Claims

Claims 4-8, 13, 19 and 20 were pending. Claims 4-8, 13, 19 and 20 are rejected. Claims 1-3, 9-12 and 14-18 were canceled previously without prejudice or disclaimer of subject matter. No claims are added.

Amendment of Claims

Independent claim 19 is amended to include the feature that a second lamina of the laminate construction of each rigid plate is removably attached to the first lamina with a screw having male threads mating with female threads formed in the first lamina to capture the at least one elastic band and provide a smooth surface for glide, the second lamina having a plurality of sunken regions surrounding screw holes for receiving a head of the screw therein, wherein the head does not protrude from a plane defined by an exterior surface of the second lamina. Support for this amendment may be found, for example, at the last paragraph of page 7 of the specification and original Figures 5 and 6.

No new matter is added.

Claim Rejections – 35 USC 102

Kane

Claims 4, 6, 7, 8, 13 and 19 stand rejected under 35 USC 102 as being anticipated by Kane (NPL - Kickstarter as cited by the Examiner, hereinafter, "Kane").

Applicant has amended independent claim 19 to include the feature that each plate is formed from first and second lamina, where the first lamina has female threads for receiving a screw having male threads. In the Kickstarter reference, as shown below, screws and nuts are used to assembly the components.

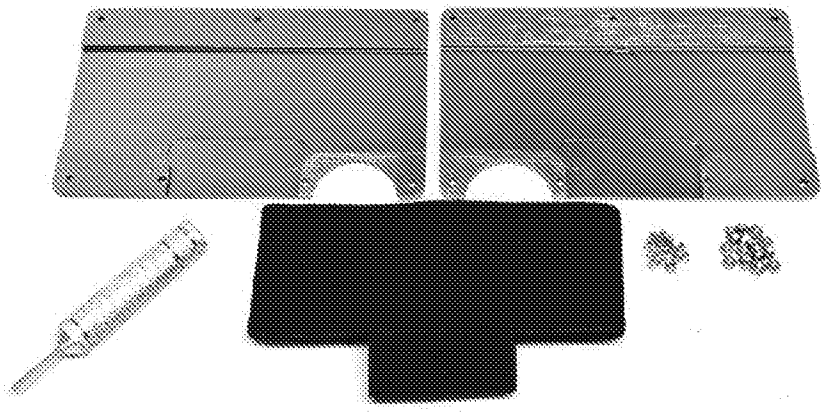

Moreover, independent claim 19 includes the feature that the second region has sunken regions about the screw holes to receive the screw head therein and prevent the screw head from extending beyond the exterior plane of the second lamina. In the Kickstarter disclosure, the heads of the screws protrude from the plane of the second lamina of each plate.

For the above reasons, independent claim 19 should be allowable over Kane. Claims 4, 6, 7, 8 and 13, being dependent from claim 19, should be allowable at least for that reason, as well as the additional recitations each claim contains.

Reconsideration and withdrawal of the rejection of claims 4, 6, 7, 8, 13 and 19 as being anticipated by Kane is respectfully requested.

Claim Rejections – 35 USC 103

Kane

Claim 5 stands rejected under 35 USC 103 as being unpatentable over Kane. As discussed above, claim 19, from which claim 5 depends, should be allowable over Kane. Accordingly, claim 5, being dependent on claim 19, should also be allowable.

Reconsideration and withdrawal of the rejection of claim 5 as being unpatentable over Kane is respectfully requested.

SHENZHEN PINCAN Exhibit 1017 Page 146

Kane and Podwika of Lehr

Claim 20 stands rejected under 35 USC 103 as being unpatentable over Kane in view of Podwika (US 5,944,080) of Lehr (US 6,230,878). Without acquiescing to the merits of the rejection, Applicant submits that claim 20 depends from allowable claim 19 and, accordingly, should themselves be allowable. Neither Podwika nor Lehr provide any teaching to overcome the deficiencies of Kane, as discussed above with respect to independent claim 19.

Accordingly, reconsideration and withdrawal of the rejection of claim 20 as being unpatentable over Kane in view of Podwika of Lehr, is respectfully requested.

CONCLUSION

Reconsideration and withdrawal of the Office Action with respect to the pending claims is requested. Applicant submits that the claims are now in condition for allowance. Early notice to that end is respectfully solicited.

In the event the examiner wishes to discuss any aspect of this response, please contact the attorney at the telephone number identified below.

Respectfully submitted,

/Lyman Smith/
Lyman Smith
Registration No. 44,342

Patent Service Associates, Inc.
18702 Van Nuys Circle
Port Charlotte, FL 33948
336-510-8799

Electronic Patent Application Fee Transmittal

Application Number:	14706019
Filing Date:	07-May-2015
Title of Invention:	COMPACT WALLET
First Named Inventor/Applicant Name:	Daniel Kane
Filer:	Lyman H Smith
Attorney Docket Number:	15050 XP

Filed as Small Entity

Filing Fees for Utility under 35 USC 111(a)

Description	Fee Code	Quantity	Amount	Sub-Total in USD($)
Basic Filing:				
Pages:				
Claims:				
Miscellaneous-Filing:				
Petition:				
Patent-Appeals-and-Interference:				
Post-Allowance-and-Post-Issuance:				
Extension-of-Time:				

Description	Fee Code	Quantity	Amount	Sub-Total in USD($)
Extension - 2 months with $0 paid	2252	1	300	300
Miscellaneous:				
			Total in USD ($)	**300**

PTO/SB/06 (09-11)
Approved for use through 1/31/2014. OMB 0651-0032
U.S. Patent and Trademark Office; U.S. DEPARTMENT OF COMMERCE
Under the Paperwork Reduction Act of 1995, no persons are required to respond to a collection of information unless it displays a valid OMB control number.

PATENT APPLICATION FEE DETERMINATION RECORD

Substitute for Form PTO-875

Application or Docket Number	Filing Date	
14/706,019	05/07/2015	☐ To be Mailed

ENTITY: ☐ LARGE ☒ SMALL ☐ MICRO

APPLICATION AS FILED – PART I

FOR	(Column 1) NUMBER FILED	(Column 2) NUMBER EXTRA	RATE ($)	FEE ($)
☐ BASIC FEE (37 CFR 1.16(a), (b), or (c))	N/A	N/A	N/A	
☐ SEARCH FEE (37 CFR 1.16(k), (i), or (m))	N/A	N/A	N/A	
☐ EXAMINATION FEE (37 CFR 1.16(o), (p), or (q))	N/A	N/A	N/A	
TOTAL CLAIMS (37 CFR 1.16(i))	minus 20 =	*	x $ =	
INDEPENDENT CLAIMS (37 CFR 1.16(h))	minus 3 =	*	x $ =	
☐ APPLICATION SIZE FEE (37 CFR 1.16(s))	If the specification and drawings exceed 100 sheets of paper, the application size fee due is $310 ($155 for small entity) for each additional 50 sheets or fraction thereof. See 35 U.S.C. 41(a)(1)(G) and 37 CFR 1.16(s).			
☐ MULTIPLE DEPENDENT CLAIM PRESENT (37 CFR 1.16(j))				
* If the difference in column 1 is less than zero, enter "0" in column 2.			TOTAL	

APPLICATION AS AMENDED – PART II

AMENDMENT 10/01/2018

	(Column 1) CLAIMS REMAINING AFTER AMENDMENT		(Column 2) HIGHEST NUMBER PREVIOUSLY PAID FOR	(Column 3) PRESENT EXTRA	RATE ($)	ADDITIONAL FEE ($)
Total (37 CFR 1.16(i))	* 8	Minus	** 20	= 0	x $50 =	0
Independent (37 CFR 1.16(h))	* 1	Minus	***3	= 0	x $230 =	0
☐ Application Size Fee (37 CFR 1.16(s))						
☐ FIRST PRESENTATION OF MULTIPLE DEPENDENT CLAIM (37 CFR 1.16(j))						
					TOTAL ADD'L FEE	0

AMENDMENT

	(Column 1) CLAIMS REMAINING AFTER AMENDMENT		(Column 2) HIGHEST NUMBER PREVIOUSLY PAID FOR	(Column 3) PRESENT EXTRA	RATE ($)	ADDITIONAL FEE ($)
Total (37 CFR 1.16(i))	*	Minus	**	=	x $ =	
Independent (37 CFR 1.16(h))	*	Minus	***	=	x $ =	
☐ Application Size Fee (37 CFR 1.16(s))						
☐ FIRST PRESENTATION OF MULTIPLE DEPENDENT CLAIM (37 CFR 1.16(j))						
					TOTAL ADD'L FEE	

* If the entry in column 1 is less than the entry in column 2, write "0" in column 3.
** If the "Highest Number Previously Paid For" IN THIS SPACE is less than 20, enter "20".
*** If the "Highest Number Previously Paid For" IN THIS SPACE is less than 3, enter "3".
The "Highest Number Previously Paid For" (Total or Independent) is the highest number found in the appropriate box in column 1.

LIE
ERNEST A. MARFO

This collection of information is required by 37 CFR 1.16. The information is required to obtain or retain a benefit by the public which is to file (and by the USPTO to process) an application. Confidentiality is governed by 35 U.S.C. 122 and 37 CFR 1.14. This collection is estimated to take 12 minutes to complete, including gathering, preparing, and submitting the completed application form to the USPTO. Time will vary depending upon the individual case. Any comments on the amount of time you require to complete this form and/or suggestions for reducing this burden, should be sent to the Chief Information Officer, U.S. Patent and Trademark Office, U.S. Department of Commerce, P.O. Box 1450, Alexandria, VA 22313-1450. DO NOT SEND FEES OR COMPLETED FORMS TO THIS ADDRESS. **SEND TO: Commissioner for Patents, P.O. Box 1450, Alexandria, VA 22313-1450.**
If you need assistance in completing the form, call 1-800-PTO-9199 and select option 2.

Notice of References Cited	Application/Control No. 14/706,019	Applicant(s)/Patent Under Reexamination Kane, Daniel	
	Examiner TRI M MAI	Art Unit 3733	Page 1 of 1

U.S. PATENT DOCUMENTS

*		Document Number Country Code-Number-Kind Code	Date MM-YYYY	Name	CPC Classification	US Classification
*	A	US-2409019-A	10-1946	CREE MARION S	B23K37/0443	33/469
*	B	US-20150059936-A1	03-2015	SINGER; RICHARD W.	A45C11/182	150/138
	C					
	D					
	E					
	F					
	G					
	H					
	I					
	J					
	K					
	L					
	M					

FOREIGN PATENT DOCUMENTS

*		Document Number Country Code-Number-Kind Code	Date MM-YYYY	Country	Name	CPC Classification
	N					
	O					
	P					
	Q					
	R					
	S					
	T					

NON-PATENT DOCUMENTS

*		Include as applicable: Author, Title Date, Publisher, Edition or Volume, Pertinent Pages)
	U	
	V	
	W	
	X	

*A copy of this reference is not being furnished with this Office action. (See MPEP § 707.05(a).)
Dates in MM-YYYY format are publication dates. Classifications may be US or foreign.

UNITED STATES PATENT AND TRADEMARK OFFICE

UNITED STATES DEPARTMENT OF COMMERCE
United States Patent and Trademark Office
Address: COMMISSIONER FOR PATENTS
P.O. Box 1450
Alexandria, Virginia 22313-1450
www.uspto.gov

APPLICATION NO.	FILING DATE	FIRST NAMED INVENTOR	ATTORNEY DOCKET NO.	CONFIRMATION NO.
14/706,019	05/07/2015	Daniel Kane	15050 XP	1677

25957 7590 12/18/2018
LAWRENCE E. LAMBELET JR.
7548 Caprio Dr
Boynton Beach, FL 33472

EXAMINER
MAI, TRI M

ART UNIT	PAPER NUMBER
3733	

NOTIFICATION DATE	DELIVERY MODE
12/18/2018	ELECTRONIC

Please find below and/or attached an Office communication concerning this application or proceeding.

The time period for reply, if any, is set in the attached communication.

Notice of the Office communication was sent electronically on above-indicated "Notification Date" to the following e-mail address(es):

agent@xpertpatents.com
dockets@walsh-ip.com
pwalsh@walsh-ip.com

Office Action Summary	Application No. 14/706,019	Applicant(s) Kane, Daniel	
	Examiner TRI M MAI	Art Unit 3733	AIA Status Yes

-- The MAILING DATE of this communication appears on the cover sheet with the correspondence address --

Period for Reply

A SHORTENED STATUTORY PERIOD FOR REPLY IS SET TO EXPIRE 3 MONTHS FROM THE MAILING DATE OF THIS COMMUNICATION.

- Extensions of time may be available under the provisions of 37 CFR 1.136(a). In no event, however, may a reply be timely filed after SIX (6) MONTHS from the mailing date of this communication.
- If NO period for reply is specified above, the maximum statutory period will apply and will expire SIX (6) MONTHS from the mailing date of this communication.
- Failure to reply within the set or extended period for reply will, by statute, cause the application to become ABANDONED (35 U.S.C. § 133). Any reply received by the Office later than three months after the mailing date of this communication, even if timely filed, may reduce any earned patent term adjustment. See 37 CFR 1.704(b).

Status

1)☐ Responsive to communication(s) filed on _____.

☐ A declaration(s)/affidavit(s) under **37 CFR 1.130(b)** was/were filed on _____.

2a)☑ This action is **FINAL.** 2b) ☐ This action is non-final.

3)☐ An election was made by the applicant in response to a restriction requirement set forth during the interview on _____; the restriction requirement and election have been incorporated into this action.

4)☐ Since this application is in condition for allowance except for formal matters, prosecution as to the merits is closed in accordance with the practice under *Ex parte Quayle*, 1935 C.D. 11, 453 O.G. 213.

Disposition of Claims*

5) ☑ Claim(s) 4-8,13 and 19-20 is/are pending in the application.

5a) Of the above claim(s) _____ is/are withdrawn from consideration.

6) ☐ Claim(s) _____ is/are allowed.

7) ☑ Claim(s) 4-8,13 and 19-20 is/are rejected.

8) ☐ Claim(s) _____ is/are objected to.

9) ☐ Claim(s) _____ are subject to restriction and/or election requirement

* If any claims have been determined allowable, you may be eligible to benefit from the **Patent Prosecution Highway** program at a participating intellectual property office for the corresponding application. For more information, please see http://www.uspto.gov/patents/init_events/pph/index.jsp or send an inquiry to **PPHfeedback@uspto.gov.**

Application Papers

10)☐ The specification is objected to by the Examiner.

11)☐ The drawing(s) filed on _____ is/are: a)☐ accepted or b)☐ objected to by the Examiner.

Applicant may not request that any objection to the drawing(s) be held in abeyance. See 37 CFR 1.85(a).

Replacement drawing sheet(s) including the correction is required if the drawing(s) is objected to. See 37 CFR 1.121(d).

Priority under 35 U.S.C. § 119

12)☐ Acknowledgment is made of a claim for foreign priority under 35 U.S.C. § 119(a)-(d) or (f).

Certified copies:

a)☐ All b)☐ Some** c)☐ None of the:

1.☐ Certified copies of the priority documents have been received.

2.☐ Certified copies of the priority documents have been received in Application No. _____.

3.☐ Copies of the certified copies of the priority documents have been received in this National Stage application from the International Bureau (PCT Rule 17.2(a)).

** See the attached detailed Office action for a list of the certified copies not received.

Attachment(s)

1) ☑ Notice of References Cited (PTO-892)

2) ☐ Information Disclosure Statement(s) (PTO/SB/08a and/or PTO/SB/08b) Paper No(s)/Mail Date _____.

3) ☐ Interview Summary (PTO-413) Paper No(s)/Mail Date _____.

4) ☐ Other: _____.

1. The present application, filed on or after March 16, 2013, is being examined under the first inventor to file provisions of the AIA.

2. Claim 5 is rejected under 35 U.S.C. 112(a) or 35 U.S.C. 112 (pre-AIA), first paragraph, as failing to comply with the written description requirement. The claim(s) contains subject matter which was not described in the specification in such a way as to reasonably convey to one skilled in the relevant art that the inventor or a joint inventor, or for pre-AIA the inventor(s), at the time the application was filed, had possession of the claimed invention.

The original specification defined adhesive as an alternative attachment means to screw/thread. Claim 5 now requires both adhesive and screw. This is a new matter rejection.

3. Claims 4-8, 13, and 19 are rejected under 35 U.S.C. 103 as being unpatentable over Kane (Kickstarter, the Ridge Wallet 2.0) in view of Cree (2409019) or Singer (20150059936). Kane teaches a compact wallet with elastic band interposed with at least two metallic rigid plates and a groove, and aligned finger notches. Note the dates on which the Ridge Wallet 2 is publically disclosed at least dated back in August 2013.

Kane meets all claimed limitations except for the flushed screw. Cree (at 9) or Singer (at 514-516), each teaches that it is known in the art to provide flushed crews as taught by Cree or Singer to provide a smooth surface for the user.

Regarding the adhesive, it would have been obvious to one of ordinary skill in the art to provide adhesive to provide added protection.

4. Claim 20 is rejected under 35 U.S.C. 103 as being unpatentable over Kane rejection, as set forth in paragraph 2, and further in view of Podwika (5944080) or Lehr (6230878). Podwika

teaches that it is known in the art to provide a band on an outer surface. Lehr also teaches a band. It would have been obvious to one of ordinary skill in the art either the band in Podwida or Lehr to provide added holding means.

5. Applicant's arguments with respect to the claims have been considered but are moot in view of new grounds of rejections.

6. Applicant's amendment necessitated the new ground(s) of rejection presented in this Office action. Accordingly, **THIS ACTION IS MADE FINAL**. See MPEP § 706.07(a). Applicant is reminded of the extension of time policy as set forth in 37 CFR 1.136(a).

A shortened statutory period for reply to this final action is set to expire THREE MONTHS from the mailing date of this action. In the event a first reply is filed within TWO MONTHS of the mailing date of this final action and the advisory action is not mailed until after the end of the THREE-MONTH shortened statutory period, then the shortened statutory period will expire on the date the advisory action is mailed, and any extension fee pursuant to 37 CFR 1.136(a) will be calculated from the mailing date of the advisory action. In no event, however, will the statutory period for reply expire later than SIX MONTHS from the date of this final action.

1. Any inquiry concerning this communication or earlier communications from the examiner should be directed to TRI M MAI whose telephone number is (571)272-4541. The examiner can normally be reached on 8am-5pm (Mon-Friday).

Examiner interviews are available via telephone, in-person, and video conferencing using a USPTO supplied web-based collaboration tool. To schedule an interview, applicant is

encouraged to use the USPTO Automated Interview Request (AIR) at http://www.uspto.gov/interviewpractice.

If attempts to reach the examiner by telephone are unsuccessful, the examiner's supervisor, Fenn Mathew can be reached on 571-272-4978. The fax phone number for the organization where this application or proceeding is assigned is 571-273-8300.

Information regarding the status of an application may be obtained from the Patent Application Information Retrieval (PAIR) system. Status information for published applications may be obtained from either Private PAIR or Public PAIR. Status information for unpublished applications is available through Private PAIR only. For more information about the PAIR system, see http://pair-direct.uspto.gov. Should you have questions on access to the Private PAIR system, contact the Electronic Business Center (EBC) at 866-217-9197 (toll-free). If you would like assistance from a USPTO Customer Service Representative or access to the automated information system, call 800-786-9199 (IN USA OR CANADA) or 571-272-1000.

TRI M. MAI
Examiner
Art Unit 3733

/TRI M MAI/
Examiner, Art Unit 3733

Search Notes	Application/Control No.	Applicant(s)/Patent Under Reexamination
	14/706,019	Kane, Daniel
	Examiner	**Art Unit**
	TRI M MAI	3733

CPC - Searched*		
Symbol	**Date**	**Examiner**
a45c 1/06, 1/08, 11/182, 13/185, 2001/083, 2011/186	7/31/2017	TM

CPC Combination Sets - Searched*		
Symbol	**Date**	**Examiner**

US Classification - Searched*			
Class	**Subclass**	**Date**	**Examiner**

* See search history printout included with this form or the SEARCH NOTES box below to determine the scope of the search.

Search Notes		
Search Notes	**Date**	**Examiner**
search updated	1/9/2018	TM
search updated	5/25/2018	TM
search updated	12/12/2018	TM
search updated	12/12/2018	TM

Interference Search			
US Class/CPC Symbol	**US Subclass/CPC Group**	**Date**	**Examiner**

SHENZHEN PINCAN Exhibit 1017 Page 157

UNITED STATES PATENT AND TRADEMARK OFFICE
COMMISSIONER FOR PATENTS
P.O.BOX 1450
ALEXANDRIA VA 22313-1451

PRESORTED
FIRST-CLASS MAIL
U.S. POSTAGE PAID
POSTEDIGITAL
NNNNN

LAWRENCE E. LAMBELET JR.
7548 Caprio Dr
Boynton Beach, FL 33472

Courtesy Reminder for
Application Serial No: 14/706,019

Attorney Docket No: 15050 XP
Customer Number: 25957
Date of Electronic Notification: 12/18/2018

This is a courtesy reminder that new correspondence is available for this application. If you have not done so already, please review the correspondence. The official date of notification of the outgoing correspondence will be indicated on the form PTOL-90 accompanying the correspondence.

An email notification regarding the correspondence was sent to the following email address(es) associated with your customer number:

dockets@walsh-ip.com
pwalsh@walsh-ip.com
agent@xpertpatents.com

To view your correspondence online or update your email addresses, please visit us anytime at **https://sportal.uspto.gov/secure/myportal/privatepair.** If you have any questions, please email the Electronic Business Center (EBC) at EBC@uspto.gov or call 1-866-217-9197.

IN THE UNITED STATES PATENT AND TRADEMARK OFFICE

In re Application of: Daniel Kane	Examiner: Tri Mai
Application No.:14/706,019	Group Art Unit: 3781
Date Filed: May 7, 2015	Conf. No.: 1661
Title: COMPACT WALLET	Customer No.: 95490

MS Amendment
Commissioner for Patents
P.O. Box 1450
Alexandria VA 22313-1450

RESPONSE TO OFFICE ACTION

Sir:

In response to the Final Office Action, please amend the above-identified application as follows and consider the attached as a submission filed under 37 CFR 1.114 with a request for continued examination. If necessary, the Commissioner is hereby authorized to credit any overpayment or charge payment for any additional fees to Deposit Account No. 50-5200.

Amendments to the Claims are reflected in the listing of claims which begins on page 2 of this paper.

Remarks/Arguments begin on page 5 of this paper.

SHENZHEN PINCAN Exhibit 1017 Page 159

Amendments to the Claims:

This listing of claims will replace all prior versions, and listings, of claims in the application:

Listing of Claims:

1-3. (Canceled)

4-5. (Canceled)

6. (Previously presented) The compact wallet of claim 19, wherein each rigid plate is comprised of metal for RFID protection.

7. (Previously presented) The compact wallet of claim 19, wherein each rigid plate is metalized for RFID protection.

8. (Previously presented) The compact wallet of claim 19, wherein at least one of the first or second lamina of each rigid plate is comprised of metal.

9 - 12. (Canceled)

13. (Previously presented) The compact wallet of claim 19, wherein the encircling elastic band is comprised of woven elastic fabric.

14 - 18. (Canceled)

19. (Currently amended) A compact wallet, comprising:

at least two rigid plates interposed to sandwich card-like contents there between, each rigid plate having a longitudinal extent;

at least one encircling elastic band interposed with the at least two rigid plates along longitudinal extents thereof to bias them inwardly and securely hold the card-like contents while providing elastic volume there between for adding or removing contents;

a groove configured to minimize the profile of the wallet and hold position of the at least one encircling elastic band with respect to each rigid plate while allowing freedom for the dynamic extension and contraction of the band over the entire running length thereof;

a first elastic strap positioned over the ends of the at least two rigid plates transverse to the longitudinal extents, the positioning functioning to retain the card-like contents from that end; and

aligned finger notches through proximal ends of the rigid plates to expose an edge of the card-like contents for the purpose of pushing the edge to elevate the contents into view through distal ends of the rigid plates, said edge providing a fulcrum to lever the proximal ends together for the purpose of fanning the distal ends apart in display of the contents,

wherein the groove is in a first lamina of a laminate construction of each rigid plate, the groove slidingly receiving one part of the at least one encircling elastic band, the groove cut into a first thickness of the first lamina; and

wherein a second lamina, having a second thickness and having planar surfaces, of the laminate construction of each rigid plate is removably attached to the first lamina with a screw having male threads mating with female threads formed in the first thickness of the first lamina to capture the at least one elastic band and provide a smooth surface for glide, the second lamina having a plurality of sunken regions surrounding screw holes for receiving a head of the screw therein, wherein the head does not protrude from a plane defined by an exterior surface of the second lamina, the first thickness being greater than the second thickness,

whereby, card-like contents may be carried with minimal silhouette on or with a person while allowing expandable capacity and ready access to individual contents from between the at least two rigid plates.

SHENZHEN PINCAN Exhibit 1017 Page 161

20. (Previously presented) The compact wallet of claim 19, further comprising a second elastic strap positioned over an outside surface of one of the at least two rigid plates to hold additional contents on the outside surface.

21. (New) A compact wallet comprising:

a first wallet plate formed from a first external plate and a first internal plate, the first external and internal plates removably affixed together;

a second wallet plate formed from a second external plate and a second internal plate, the first external and internal plates removable affixed together, wherein the first and second external plates have an external plate thickness smaller than an internal plate thickness of the first and second internal plates and the first and second external plates have planar external and internal surfaces;

a first and second groove formed on an interior surface and cut into the internal plate thickness of the first internal plate and the second internal plate, the interior surface facing the first and second external plates, respectively, when the first and second interior plates are removably affixed with the first and second exterior plates;

a first elastic strap extending through the first and second grooves to resiliently keep an exterior surface of the first and second internal places adjacent each other;

a plurality of assembly holes formed through the first and second external plates;

a plurality of receiver holes formed in the first and second internal plates, the plurality of assembly holes aligning with the plurality of receiver holes;

female threads formed in the plurality of receiver holes; and

screws fitting through the plurality of assembly holes and threading into the plurality of receiver holes to removable affix the first and second internal plates with the first and second external plates, respectively.

22. (New) The compact wallet of claim 21, wherein the first and second external plates include a recess to receive a head of the screws such that the head of the screws are flush with an exterior surface of the first and second external plates.

SHENZHEN PINCAN Exhibit 1017 Page 162

Electronic Acknowledgement Receipt

EFS ID:	36338079
Application Number:	14706019
International Application Number:	
Confirmation Number:	1677
Title of Invention:	COMPACT WALLET
First Named Inventor/Applicant Name:	Daniel Kane
Customer Number:	25957
Filer:	Lyman H Smith
Filer Authorized By:	
Attorney Docket Number:	15050 XP
Receipt Date:	18-JUN-2019
Filing Date:	07-MAY-2015
Time Stamp:	18:33:41
Application Type:	Utility under 35 USC 111(a)

Payment information:

Submitted with Payment	yes
Payment Type	CARD
Payment was successfully received in RAM	$1650
RAM confirmation Number	061919INTEFSW18341800
Deposit Account	
Authorized User	

The Director of the USPTO is hereby authorized to charge indicated fees and credit any overpayment as follows:

File Listing:

Document Number	Document Description	File Name	File Size(Bytes)/ Message Digest	Multi Part /.zip	Pages (if appl.)
1	Request for Continued Examination (RCE)	sb0030efs-RCE2.pdf	85111 ccae64b80b0a2f383725862722415b7eadcbddee	no	3
Warnings:					
This is not a USPTO supplied RCE SB30 form.					
Information:					
2		ReplyFOA-RCE.pdf	149460 b86b8ac8d374ca41ae2eeaa7d520a5dd586c46ea	yes	9
	Multipart Description/PDF files in .zip description				
	Document Description		**Start**	**End**	
	Amendment Submitted/Entered with Filing of CPA/RCE		1	1	
	Claims		2	4	
	Applicant Arguments/Remarks Made in an Amendment		5	9	
Warnings:					
Information:					
3	Fee Worksheet (SB06)	fee-info.pdf	32238 3d1a374aab29e3e5f45d14cef942a9dfdf9e2073	no	2
Warnings:					
Information:					
			Total Files Size (in bytes):	266809	

This Acknowledgement Receipt evidences receipt on the noted date by the USPTO of the indicated documents, characterized by the applicant, and including page counts, where applicable. It serves as evidence of receipt similar to a Post Card, as described in MPEP 503.

New Applications Under 35 U.S.C. 111
If a new application is being filed and the application includes the necessary components for a filing date (see 37 CFR 1.53(b)-(d) and MPEP 506), a Filing Receipt (37 CFR 1.54) will be issued in due course and the date shown on this Acknowledgement Receipt will establish the filing date of the application.
National Stage of an International Application under 35 U.S.C. 371
If a timely submission to enter the national stage of an international application is compliant with the conditions of 35 U.S.C. 371 and other applicable requirements a Form PCT/DO/EO/903 indicating acceptance of the application as a national stage submission under 35 U.S.C. 371 will be issued in addition to the Filing Receipt, in due course.
New International Application Filed with the USPTO as a Receiving Office
If a new international application is being filed and the international application includes the necessary components for an international filing date (see PCT Article 11 and MPEP 1810), a Notification of the International Application Number and of the International Filing Date (Form PCT/RO/105) will be issued in due course, subject to prescriptions concerning national security, and the date shown on this Acknowledgement Receipt will establish the international filing date of the application.

PTO/SB/30EFS (07-14)
Approved for use through 07/31/2016. OMB 0651-0031
U.S. Patent and Trademark Office; U.S. DEPARTMENT OF COMMERCE
Under the Paperwork Reduction Act of 1995, no persons are required to respond to a collection of information unless it contains a valid OMB control number.

REQUEST FOR CONTINUED EXAMINATION(RCE)TRANSMITTAL
(Submitted Only via EFS-Web)

Application Number	14706019	Filing Date	2015-05-07	Docket Number (if applicable)		Art Unit	3733
First Named Inventor	Daniel Kane			Examiner Name	Tri Mai		

This is a Request for Continued Examination (RCE) under 37 CFR 1.114 of the above-identified application.
Request for Continued Examination (RCE) practice under 37 CFR 1.114 does not apply to any utility or plant application filed prior to June 8, 1995, to any international application that does not comply with the requirements of 35 U.S.C. 371, or to any design application. The Instruction Sheet for this form is located at WWW.USPTO.GOV.

SUBMISSION REQUIRED UNDER 37 CFR 1.114

Note: If the RCE is proper, any previously filed unentered amendments and amendments enclosed with the RCE will be entered in the order in which they were filed unless applicant instructs otherwise. If applicant does not wish to have any previously filed unentered amendment(s) entered, applicant must request non-entry of such amendment(s).

☐ Previously submitted. If a final Office action is outstanding, any amendments filed after the final Office action may be considered as a submission even if this box is not checked.

- ☐ Consider the arguments in the Appeal Brief or Reply Brief previously filed on _____
- ☐ Other _____

☒ Enclosed

- ☒ Amendment/Reply
- ☐ Information Disclosure Statement (IDS)
- ☐ Affidavit(s)/ Declaration(s)
- ☐ Other _____

MISCELLANEOUS

☐ Suspension of action on the above-identified application is requested under 37 CFR 1.103(c) for a period of months _____
(Period of suspension shall not exceed 3 months; Fee under 37 CFR 1.17(i) required)

☐ Other _____

FEES

☒ **The RCE fee under 37 CFR 1.17(e) is required by 37 CFR 1.114 when the RCE is filed.**
The Director is hereby authorized to charge any underpayment of fees, or credit any overpayments, to Deposit Account No 505200

SIGNATURE OF APPLICANT, ATTORNEY, OR AGENT REQUIRED

☒ Patent Practitioner Signature

☐ Applicant Signature

PTO/SB/30EFS (07-14)
Approved for use through 07/31/2016. OMB 0651-0031
U.S. Patent and Trademark Office; U.S. DEPARTMENT OF COMMERCE
Under the Paperwork Reduction Act of 1995, no persons are required to respond to a collection of information unless it contains a valid OMB control number.

Signature of Registered U.S. Patent Practitioner			
Signature	/Lyman Smith/	Date (YYYY-MM-DD)	2019-06-18
Name	Lyman Smith	Registration Number	44342

This collection of information is required by 37 CFR 1.114. The information is required to obtain or retain a benefit by the public which is to file (and by the USPTO to process) an application. Confidentiality is governed by 35 U.S.C. 122 and 37 CFR 1.11 and 1.14. This collection is estimated to take 12 minutes to complete, including gathering, preparing, and submitting the completed application form to the USPTO. Time will vary depending upon the individual case. Any comments on the amount of time you require to complete this form and/or suggestions for reducing this burden, should be sent to the Chief Information Officer, U.S. Patent and Trademark Office, U.S. Department of Commerce, P.O. Box 1450, Alexandria, VA 22313-1450.

If you need assistance in completing the form, call 1-800-PTO-9199 and select option 2.

Privacy Act Statement

The Privacy Act of 1974 (P.L. 93-579) requires that you be given certain information in connection with your submission of the attached form related to a patent application or patent. Accordingly, pursuant to the requirements of the Act, please be advised that: (1) the general authority for the collection of this information is 35 U.S.C. 2(b)(2); (2) furnishing of the information solicited is voluntary; and (3) the principal purpose for which the information is used by the U.S. Patent and Trademark Office is to process and/or examine your submission related to a patent application or patent. If you do not furnish the requested information, the U.S. Patent and Trademark Office may not be able to process and/or examine your submission, which may result in termination of proceedings or abandonment of the application or expiration of the patent.

The information provided by you in this form will be subject to the following routine uses:

1. The information on this form will be treated confidentially to the extent allowed under the Freedom of Information Act (5 U.S.C. 552) and the Privacy Act (5 U.S.C. 552a). Records from this system of records may be disclosed to the Department of Justice to determine whether the Freedom of Information Act requires disclosure of these records.

2. A record from this system of records may be disclosed, as a routine use, in the course of presenting evidence to a court, magistrate, or administrative tribunal, including disclosures to opposing counsel in the course of settlement negotiations.

3. A record in this system of records may be disclosed, as a routine use, to a Member of Congress submitting a request involving an individual, to whom the record pertains, when the individual has requested assistance from the Member with respect to the subject matter of the record.

4. A record in this system of records may be disclosed, as a routine use, to a contractor of the Agency having need for the information in order to perform a contract. Recipients of information shall be required to comply with the requirements of the Privacy Act of 1974, as amended, pursuant to 5 U.S.C. 552a(m).

5. A record related to an International Application filed under the Patent Cooperation Treaty in this system of records may be disclosed, as a routine use, to the International Bureau of the World Intellectual Property Organization, pursuant to the Patent Cooperation Treaty.

6. A record in this system of records may be disclosed, as a routine use, to another federal agency for purposes of National Security review (35 U.S.C. 181) and for review pursuant to the Atomic Energy Act (42 U.S.C. 218(c)).

7. A record from this system of records may be disclosed, as a routine use, to the Administrator, General Services, or his/her designee, during an inspection of records conducted by GSA as part of that agency's responsibility to recommend improvements in records management practices and programs, under authority of 44 U.S.C. 2904 and 2906. Such disclosure shall be made in accordance with the GSA regulations governing inspection of records for this purpose, and any other relevant (i.e., GSA or Commerce) directive. Such disclosure shall not be used to make determinations about individuals.

8. A record from this system of records may be disclosed, as a routine use, to the public after either publication of the application pursuant to 35 U.S.C. 122(b) or issuance of a patent pursuant to 35 U.S.C. 151. Further, a record may be disclosed, subject to the limitations of 37 CFR 1.14, as a routine use, to the public if the record was filed in an application which became abandoned or in which the proceedings were terminated and which application is referenced by either a published application, an application open to public inspections or an issued patent.

9. A record from this system of records may be disclosed, as a routine use, to a Federal, State, or local law enforcement agency, if the USPTO becomes aware of a violation or potential violation of law or regulation.

REMARKS/ARGUMENTS

Status of Claims

Claims 4-8, 13, 19 and 20 were pending. Claims 4-8, 13, 19 and 20 are rejected. Claims 1-3, 9-12 and 14-18 were canceled previously without prejudice or disclaimer of subject matter. Claims 4 and 5 are canceled herewithin without prejudice or disclaimer of subject matter. New claims 21 and 22 are added.

Amendment of Claims

Independent claim 19 is amended to describe the relative thickness of the laminate construction. Support for this amendment may be found in the original drawings.

New independent claim 21 finds support in the original specification and drawings.

New dependent claim 22 finds support in the original specification and drawings.

No new matter is added.

Claim Rejections – 35 USC 112

Claim 5 stands rejected under 35 USC 112(b) / 112, second paragraph, as being indefinite. Without acquiescing to the merits of the rejection, Applicant has canceled claim 5, rendering the rejection moot.

Claim Rejections – 35 USC 103

Kane and Cree or Singer

Claims 4-8, 13 and 19 stand rejected under 35 USC 103 as being unpatentable over Kane (NPL - Kickstarter as cited by the Examiner, hereinafter, "Kane") in view of Cree (US 2409019) or Singer (US 2015/0059936).

Applicant had amended independent claim 19 previously to include the feature that each plate is formed from first and second lamina, where the first lamina has female threads for receiving a screw having male threads. In the Kickstarter reference, as shown below, screws and nuts are used to assembly the components.

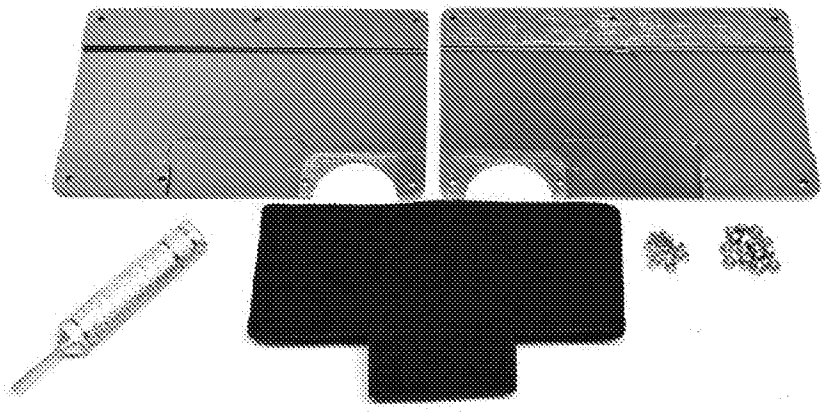

Moreover, independent claim 19 includes the feature that the second region has sunken regions about the screw holes to receive the screw head therein and prevent the screw head from extending beyond the exterior plane of the second lamina. In the Kickstarter disclosure, the heads of the screws protrude from the plane of the second lamina of each plate.

The Examiner relies on either Cree or Singer to illustrate this feature.

Regarding the Cree reference, Applicant submits the reference is not analogous art and, accordingly, there can be no motivation to utilize the reference in the current rejection.

It is well-established that the Office may only rely on analogous art to support an obviousness rejection. *Innovention Toys, LLC, v. MGA Entertainment, Inc.*, No. 2010-1290, slip op. at 12 (Fed. Cir. 2011); *In re Bigio*, 381 F.3d 1320, 1325 (Fed. Cir. 2004); *In re Clay*, 966 F.2d 656, 658 (Fed. Cir. 1992). While the scope of analogous prior art may sometimes be wide, the Federal Circuit has confirmed that it is **not without limit**. See *In re Klein*, 647 F.3d 1343 (Fed. Cir. 2011) (reversing the BPAI's judgment of obviousness after concluding that no less than five prior art references relied upon by the BPAI were non-analogous).

The test for analogous art is very specific. Art **is non-analogous unless** it is: (1) from the same field of endeavor as the claimed invention; or (2) reasonably pertinent to the particular problem faced by the inventor. *In re Bigio*, 381 F.3d at 1325; *In re Wood and Eversole*, 599 F.2d 1032, 1036 (CCPA 1979). Thus, an art citation that is not from the

same field of endeavor as a claimed invention MUST be "reasonably pertinent" to the problem addressed by the inventor.

In the instant case, Cree is drawn to a welding template. The present invention is drawn to compact wallets. Accordingly, it is clear that Cree and the present invention are clearly not in the same field of endeavor.

Accordingly, Cree and the present invention cannot be considered as in the same field of endeavor.

Next, Applicant notes that Cree is not reasonably pertinent to the particular problem faced by the inventor. As described in a Memo from Robert Bahr, Acting Associate Commissioner for Patent Examination Policy, to the Patent Examining Corp on July 26, 2011, in order for a reference to be "reasonably pertinent" to the problem, it must "**logically [ ] have commended itself to an inventor's attention in considering his problem.**" *In re Icon Health and Fitness, Inc.*, 496 F.3d 1374, 1379-80 (Fed. Cir. 2007) (quoting *In re Clay*, 966 F.2d 656,658 (Fed. Cir. 1992)). See generally MPEP 2141.01(a). The particular problem faced by the inventor is create a compact wallet. Clearly, an inventor trying to design a compact wallet would not look to a reference that describes welding templates, as is the case in Cree. The skilled person would not make prima facie combination of Kane and Cree because they are completely different kinds of equipment.

Further, neither Kane nor Cree nor Singer teach or fairly suggest the plate thickness / planar elements provided in independent claim 19.

For the above reasons, independent claim 19 should be allowable over Kane. Claims 6, 7, 8 and 13, being dependent from claim 19, should be allowable at least for that reason, as well as the additional recitations each claim contains.

Reconsideration and withdrawal of the rejection of claims 4-8, 13 and 19 as being anticipated by Kane is respectfully requested.

Kane, Cree or Singer, and Podwika or Lehr

Claim 20 stands rejected under 35 USC 103 as being unpatentable over Kane in view of Cree or Singer, further in view of Podwika (US 5,944,080) of Lehr (US 6,230,878). Without acquiescing to the merits of the rejection, Applicant submits that claim 20 depends from allowable claim 19 and, accordingly, should themselves be allowable.

Neither Podwika nor Lehr provide any teaching to overcome the deficiencies of Kane and Cree and Singer, as discussed above with respect to independent claim 19.

Accordingly, reconsideration and withdrawal of the rejection of claim 20 as being unpatentable over Kane in view of Cree or Singer, further in view of Podwika of Lehr, is respectfully requested.

New Claims

Applicant submits that new claim 21 should be allowable for reasons similar to those discussed above with respect to claim 19.

CONCLUSION

Reconsideration and withdrawal of the Office Action with respect to the pending claims is requested. Applicant submits that the claims are now in condition for allowance. Early notice to that end is respectfully solicited.

In the event the examiner wishes to discuss any aspect of this response, please contact the attorney at the telephone number identified below.

Respectfully submitted,

/Lyman Smith/

Lyman Smith
Registration No. 44,342

Patent Service Associates, Inc.
18702 Van Nuys Circle
Port Charlotte, FL 33948
336-510-8799

Electronic Patent Application Fee Transmittal

Application Number:	14706019
Filing Date:	07-May-2015
Title of Invention:	COMPACT WALLET
First Named Inventor/Applicant Name:	Daniel Kane
Filer:	Lyman H Smith
Attorney Docket Number:	15050 XP

Filed as Small Entity

Filing Fees for Utility under 35 USC 111(a)

Description	Fee Code	Quantity	Amount	Sub-Total in USD($)
Basic Filing:				
Pages:				
Claims:				
Miscellaneous-Filing:				
Petition:				
Patent-Appeals-and-Interference:				
Post-Allowance-and-Post-Issuance:				
Extension-of-Time:				

Description	Fee Code	Quantity	Amount	Sub-Total in USD($)
Extension - 3 months with $0 paid	2253	1	700	700
Miscellaneous:				
RCE- 2ND AND SUBSEQUENT REQUEST	2820	1	950	950
		Total in USD ($)		**1650**

PTO/SB/06 (09-11)
Approved for use through 1/31/2014. OMB 0651-0032
U.S. Patent and Trademark Office; U.S. DEPARTMENT OF COMMERCE
Under the Paperwork Reduction Act of 1995, no persons are required to respond to a collection of information unless it displays a valid OMB control number.

PATENT APPLICATION FEE DETERMINATION RECORD

Substitute for Form PTO-875

Application or Docket Number	Filing Date	
14/706,019	05/07/2015	☐ To be Mailed

ENTITY: ☐ LARGE ☑ SMALL ☐ MICRO

APPLICATION AS FILED - PART I

FOR	(Column 1) NUMBER FILED	(Column 2) NUMBER EXTRA		RATE ($)	FEE ($)
☐ BASIC FEE (37 CFR 1.16(a), (b), or (c))	N/A	N/A		N/A	
☐ SEARCH FEE (37 CFR 1.16(k), (i), or (m))	N/A	N/A		N/A	
☐ EXAMINATION FEE (37 CFR 1.16(o), (p), or (q))	N/A	N/A		N/A	
TOTAL CLAIMS (37 CFR 1.16(i))	minus 20 =	*		x $40 =	
INDEPENDENT CLAIMS (37 CFR 1.16(h))	minus 3 =	*		x $210 =	
☐ APPLICATION SIZE FEE (37 CFR 1.16(s))	If the specification and drawings exceed 100 sheets of paper, the application size fee due is $310 ($155 for small entity) for each additional 50 sheets or fraction thereof. See 35 U.S.C. 41(a)(1)(G) and 37 CFR 1.16(s).				
☐ MULTIPLE DEPENDENT CLAIM PRESENT (37 CFR 1.16(j))					
* If the difference in column 1 is less than zero, enter "0" in column 2.				TOTAL	

APPLICATION AS AMENDED - PART II

AMENDMENT	06/18/2019	(Column 1) CLAIMS REMAINING AFTER AMENDMENT		(Column 2) HIGHEST NUMBER PREVIOUSLY PAID FOR	(Column 3) PRESENT EXTRA		RATE ($)	ADDITIONAL FEE ($)
	Total (37 CFR 1.16(i))	* 8	Minus	** 20	= 0		x $50 =	0
	Independent (37 CFR 1.16(h))	* 2	Minus	*** 3	= 0		x $230 =	0
	☐ Application Size Fee (37 CFR 1.16(s))							
	☐ FIRST PRESENTATION OF MULTIPLE DEPENDENT CLAIM (37 CFR 1.16(j))							
							TOTAL ADD'L FEE	0

AMENDMENT		(Column 1) CLAIMS REMAINING AFTER AMENDMENT		(Column 2) HIGHEST NUMBER PREVIOUSLY PAID FOR	(Column 3) PRESENT EXTRA		RATE ($)	ADDITIONAL FEE ($)
	Total (37 CFR 1.16(i))	*	Minus	**	=		x $0 =	
	Independent (37 CFR 1.16(h))	*	Minus	***	=		x $0 =	
	☐ Application Size Fee (37 CFR 1.16(s))							
	☐ FIRST PRESENTATION OF MULTIPLE DEPENDENT CLAIM (37 CFR 1.16(j))							
							TOTAL ADD'L FEE	

* If the entry in column 1 is less than the entry in column 2, write "0" in column 3.	LIE
** If the "Highest Number Previously Paid For" IN THIS SPACE is less than 20, enter "20".	/DAWN BREWER/
*** If the "Highest Number Previously Paid For" IN THIS SPACE is less than 3, enter "3".	
The "Highest Number Previously Paid For" (Total or Independent) is the highest number found in the appropriate box in column 1.	

This collection of information is required by 37 CFR 1.16. The information is required to obtain or retain a benefit by the public which is to file (and by the USPTO to process) an application. Confidentiality is governed by 35 U.S.C. 122 and 37 CFR 1.14. This collection is estimated to take 12 minutes to complete, including gathering, preparing, and submitting the completed application form to the USPTO. Time will vary depending upon the individual case. Any comments on the amount of time you require to complete this form and/or suggestions for reducing this burden, should be sent to the Chief Information Officer, U.S. Patent and Trademark Office, U.S. Department of Commerce, P.O. Box 1450, Alexandria, VA 22313-1450. DO NOT SEND FEES OR COMPLETED FORMS TO THIS ADDRESS. **SEND TO: Commissioner for Patents, P.O. Box 1450, Alexandria, VA 22313-1450.**

If you need assistance in completing the form, call 1-800-PTO-9199 and select option 2.

UNITED STATES PATENT AND TRADEMARK OFFICE

UNITED STATES DEPARTMENT OF COMMERCE
United States Patent and Trademark Office
Address: COMMISSIONER FOR PATENTS
P.O. Box 1450
Alexandria, Virginia 22313-1450
www.uspto.gov

APPLICATION NO.	FILING DATE	FIRST NAMED INVENTOR	ATTORNEY DOCKET NO.	CONFIRMATION NO.
14/706,019	05/07/2015	Daniel Kane	15050 XP	1677

25957 7590 07/25/2019
LAWRENCE E. LAMBELET JR.
7548 Caprio Dr
Boynton Beach, FL 33472

EXAMINER
MAI, TRI M

ART UNIT	PAPER NUMBER
3733	

NOTIFICATION DATE	DELIVERY MODE
07/25/2019	ELECTRONIC

Please find below and/or attached an Office communication concerning this application or proceeding.

The time period for reply, if any, is set in the attached communication.

Notice of the Office communication was sent electronically on above-indicated "Notification Date" to the following e-mail address(es):

agent@xpertpatents.com
dockets@walsh-ip.com
pwalsh@walsh-ip.com

Office Action Summary	Application No. 14/706,019	Applicant(s) Kane, Daniel	
	Examiner TRI M MAI	Art Unit 3733	AIA (FITF) Status Yes

-- The MAILING DATE of this communication appears on the cover sheet with the correspondence address --

Period for Reply

A SHORTENED STATUTORY PERIOD FOR REPLY IS SET TO EXPIRE 3 MONTHS FROM THE MAILING DATE OF THIS COMMUNICATION.

- Extensions of time may be available under the provisions of 37 CFR 1.136(a). In no event, however, may a reply be timely filed after SIX (6) MONTHS from the mailing date of this communication.
- If NO period for reply is specified above, the maximum statutory period will apply and will expire SIX (6) MONTHS from the mailing date of this communication.
- Failure to reply within the set or extended period for reply will, by statute, cause the application to become ABANDONED (35 U.S.C. § 133). Any reply received by the Office later than three months after the mailing date of this communication, even if timely filed, may reduce any earned patent term adjustment. See 37 CFR 1.704(b).

Status

1)☐ Responsive to communication(s) filed on _____.

☐ A declaration(s)/affidavit(s) under **37 CFR 1.130(b)** was/were filed on _____.

2a)☐ This action is **FINAL.** 2b) ☑ This action is non-final.

3)☐ An election was made by the applicant in response to a restriction requirement set forth during the interview on _____; the restriction requirement and election have been incorporated into this action.

4)☐ Since this application is in condition for allowance except for formal matters, prosecution as to the merits is closed in accordance with the practice under *Ex parte Quayle*, 1935 C.D. 11, 453 O.G. 213.

Disposition of Claims*

5) ☑ Claim(s) 6-8,13 and 19-22 is/are pending in the application.

5a) Of the above claim(s) _____ is/are withdrawn from consideration.

6) ☐ Claim(s) _____ is/are allowed.

7) ☑ Claim(s) 6-8,13 and 19-22 is/are rejected.

8) ☐ Claim(s) _____ is/are objected to.

9) ☐ Claim(s) _____ are subject to restriction and/or election requirement

* If any claims have been determined allowable, you may be eligible to benefit from the **Patent Prosecution Highway** program at a participating intellectual property office for the corresponding application. For more information, please see http://www.uspto.gov/patents/init_events/pph/index.jsp or send an inquiry to **PPHfeedback@uspto.gov.**

Application Papers

10)☐ The specification is objected to by the Examiner.

11)☐ The drawing(s) filed on _____ is/are: a)☐ accepted or b)☐ objected to by the Examiner.

Applicant may not request that any objection to the drawing(s) be held in abeyance. See 37 CFR 1.85(a).

Replacement drawing sheet(s) including the correction is required if the drawing(s) is objected to. See 37 CFR 1.121(d).

Priority under 35 U.S.C. § 119

12)☐ Acknowledgment is made of a claim for foreign priority under 35 U.S.C. § 119(a)-(d) or (f).

Certified copies:

a)☐ All b)☐ Some** c)☐ None of the:

1.☐ Certified copies of the priority documents have been received.

2.☐ Certified copies of the priority documents have been received in Application No. _____.

3.☐ Copies of the certified copies of the priority documents have been received in this National Stage application from the International Bureau (PCT Rule 17.2(a)).

** See the attached detailed Office action for a list of the certified copies not received.

Attachment(s)

1) ☐ Notice of References Cited (PTO-892)

2) ☐ Information Disclosure Statement(s) (PTO/SB/08a and/or PTO/SB/08b) Paper No(s)/Mail Date _____.

3) ☐ Interview Summary (PTO-413) Paper No(s)/Mail Date _____.

4) ☐ Other: _____.

Notice of Pre-AIA or AIA Status

1. The present application, filed on or after March 16, 2013, is being examined under the first inventor to file provisions of the AIA.

2. Claim 20-21 are rejected under 35 U.S.C. 112(b) or 35 U.S.C. 112 (pre-AIA), second paragraph, as being indefinite for failing to particularly point out and distinctly claim the subject matter.

"first external and internal plates" has no antecedent basis.

In "the interior surface facing the first and second external plates", "the interior surface" is part of the pluralities previous recited. It is unclear which one in the recited pluralities intended.

3. Claim 21 is rejected under 35 U.S.C. 102(a)(1) as being anticipated by Kane (Kickstarter, the Ridge Wallet 2.0). Kane teaches a compact wallet with elastic band with two sides each side has one machined internal plate and one external plate. Note the groove is cut into the internal plate and the screws is screwed from the external plate. Also the thickness of the internal plates being greater than the second thickness (One can see some of the edges of the device wherein the internal plates (with the machines recessed) having a greater thickness than the external plates. Regarding the screws, note that Kane teaches the screws which inherently would have a plurality of receiver holes formed in the internal plates since the screws are screwed from the exterior plates.

Note the dates on which the Ridge Wallet 2 is publically disclosed at least dated back in August 2013.

PLAY

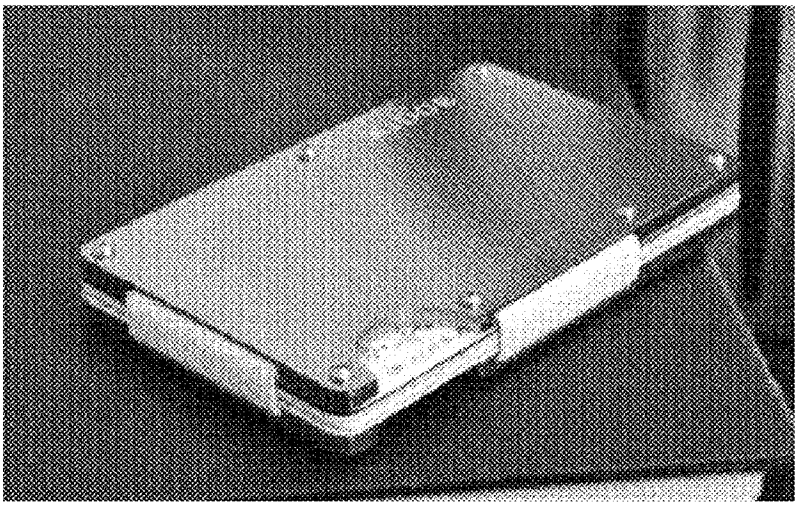

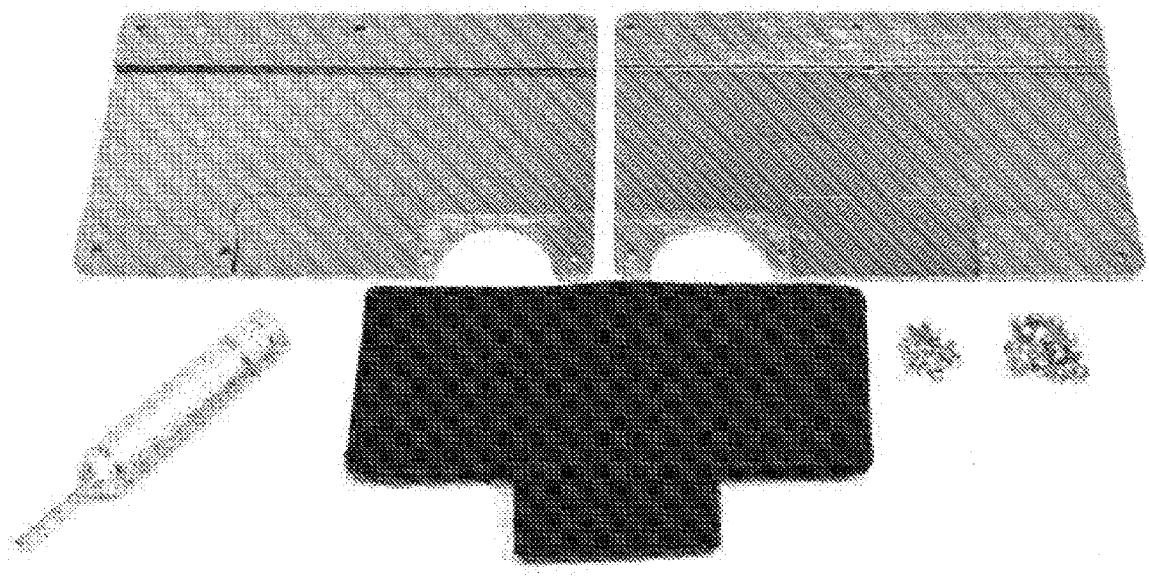

Note the teachings:

"The Integrated Elastic Track can expand to hold up to 12 cards and then immediately contract to hold a single card securely. And should the elastic ever wear out, **you can easily replace it.**

The track runs along **two hollow interior plates** machined from anodized aircraft grade aluminum. The interior is hand-polished to prevent scratches and allow your cards to slide smoothly.

You can then choose between Titanium, Aluminum, or Carbon Fiber for the outer faceplates.

The interior plates have been tapered at the edge to allow easier access to the middle cards, and re-machined with threads for **seven hex screws** on either side that turn the wallet into a "system" that can be completely disassembled by the user to replace the elastic and exchange outer plates for greater personalization.

Low profile to easily fit in your front pocket

Block RFID-skimming devices (wireless identity theft)

Singular Construction that won't let cards slip out the bottom

Expandable track that can accommodate a various number of cards

Available in brushed natural and black

What's new:

Re-Machined interior plates

Improved and replaceable elastic
Custom hex screws instead of rivets
Interchangeable faceplates (swap materials and money clips)
Improved traditional money clip design
Designed additional money clip with an internal spring (spring-loaded)
Improved metals including a spring steel
Optional carbon fiber faceplates
Greater selection of anodization (gunmetal and pink)"

4. Claims 6-8, 13, 19, and 21-22 are rejected under 35 U.S.C. 103 as being unpatentable over Kane (Kickstarter, the Ridge Wallet 2.0) in view of Cree (2409019) or Singer (20150059936)

Kane meets all claimed limitations except for the flushed screw. Cree (at 9) or Singer (at 514-516), each teaches that it is known in the art to provide flushed crews as taught by Cree or Singer to provide a smooth surface for the user.

5. Claim 20 is rejected under 35 U.S.C. 103 as being unpatentable over Kane rejection, as set forth in paragraph 4, and further in view of Podwika (5944080) or Lehr (6230878). Podwika teaches that it is known in the art to provide a band on an outer surface. Lehr also teaches a band. It would have been obvious to one of ordinary skill in the art either the band in Podwida or Lehr to provide added holding means.

6. Applicant's arguments have been fully considered but they are not persuasive. Applicant asserts that the device in Kane has a sunken portion. Please note that a sunken portion is inherently associated with a flushed screw, and this flush screw is shown in either Cree (2409019) or Singer (20150059936). Please note that the difference is merely provide a flush screw instead of a protruding screw in the Kane reference. The examiner submits that this is

common sense to substitute one type of screw for another. Therefore, to provide a flush screw with a sunken region would have been obvious.

Regarding the Kane in view of Podwika or Lehr, note that applied references are all related to card holding device and in the same analogous art and to combine these references would have been obvious.

7. Any inquiry concerning this communication or earlier communications from the examiner should be directed to TRI M MAI whose telephone number is (571)272-4541. The examiner can normally be reached on 8am-5pm (Mon-Friday).

Examiner interviews are available via telephone, in-person, and video conferencing using a USPTO supplied web-based collaboration tool. To schedule an interview, applicant is encouraged to use the USPTO Automated Interview Request (AIR) at http://www.uspto.gov/interviewpractice.

If attempts to reach the examiner by telephone are unsuccessful, the examiner's supervisor, Fenn Mathew can be reached on 571-272-4978. The fax phone number for the organization where this application or proceeding is assigned is 571-273-8300.

Information regarding the status of an application may be obtained from the Patent Application Information Retrieval (PAIR) system. Status information for published applications may be obtained from either Private PAIR or Public PAIR. Status information for unpublished applications is available through Private PAIR only. For more information about the PAIR system, see http://pair-direct.uspto.gov. Should you have questions on access to the Private PAIR system, contact the Electronic Business Center (EBC) at 866-217-9197 (toll-free). If you would like assistance from a USPTO Customer Service Representative or access to the automated information system, call 800-786-9199 (IN USA OR CANADA) or 571-272-1000.

TRI M. MAI
Examiner
Art Unit 3733

/TRI M MAI/
Examiner, Art Unit 3733

Search Notes	Application/Control No.	Applicant(s)/Patent Under Reexamination
	14/706,019	Kane, Daniel
	Examiner	**Art Unit**
	TRI M MAI	3733

CPC - Searched*		
Symbol	**Date**	**Examiner**
a45c 1/06, 1/08, 11/182, 13/185, 2001/083, 2011/186	7/31/2017	TM

CPC Combination Sets - Searched*		
Symbol	**Date**	**Examiner**

US Classification - Searched*			
Class	**Subclass**	**Date**	**Examiner**

* See search history printout included with this form or the SEARCH NOTES box below to determine the scope of the search.

Search Notes		
Search Notes	**Date**	**Examiner**
search updated	1/9/2018	TM
search updated	5/25/2018	TM
search updated	12/12/2018	TM
search updated	12/12/2018	TM
search updated	07/19/2019	TM

Interference Search			
US Class/CPC Symbol	**US Subclass/CPC Group**	**Date**	**Examiner**

SHENZHEN PINCAN Exhibit 1017 Page 185

UNITED STATES PATENT AND TRADEMARK OFFICE
COMMISSIONER FOR PATENTS
P.O.BOX 1450
ALEXANDRIA VA 22313-1451

PRESORTED
FIRST-CLASS MAIL
U.S. POSTAGE PAID
POSTEDIGITAL
NNNNN

LAWRENCE E. LAMBELET JR.
7548 Caprio Dr
Boynton Beach, FL 33472

Courtesy Reminder for
Application Serial No: 14/706,019

Attorney Docket No: 15050 XP
Customer Number: 25957
Date of Electronic Notification: 07/25/2019

This is a courtesy reminder that new correspondence is available for this application. If you have not done so already, please review the correspondence. The official date of notification of the outgoing correspondence will be indicated on the form PTOL-90 accompanying the correspondence.

An email notification regarding the correspondence was sent to the following email address(es) associated with your customer number:

dockets@walsh-ip.com
pwalsh@walsh-ip.com
agent@xpertpatents.com

To view your correspondence online or update your email addresses, please visit us anytime at **https://ppair-my.uspto.gov/pair/PrivatePair.**
If you have any questions, please email the Electronic Business Center (EBC) at EBC@uspto.gov or call 1-866-217-9197.

UNITED STATES PATENT AND TRADEMARK OFFICE

UNITED STATES DEPARTMENT OF COMMERCE
United States Patent and Trademark Office
Address: COMMISSIONER FOR PATENTS
P.O. Box 1450
Alexandria, Virginia 22313-1450
www.uspto.gov

APPLICATION NO.	FILING DATE	FIRST NAMED INVENTOR	ATTORNEY DOCKET NO.	CONFIRMATION NO.
14/706,019	05/07/2015	Daniel Kane	15050 XP	1677

25957 7590 04/01/2020
LAWRENCE E. LAMBELET JR.
7548 Caprio Dr
Boynton Beach, FL 33472

EXAMINER
MAI, TRI M

ART UNIT	PAPER NUMBER
3733	

NOTIFICATION DATE	DELIVERY MODE
04/01/2020	ELECTRONIC

Please find below and/or attached an Office communication concerning this application or proceeding.

The time period for reply, if any, is set in the attached communication.

Notice of the Office communication was sent electronically on above-indicated "Notification Date" to the following e-mail address(es):

agent@xpertpatents.com
dockets@walsh-ip.com
pwalsh@walsh-ip.com

Notice of Abandonment	Application No.	Applicant(s)
	14/706,019	Kane, Daniel
	Examiner	**Art Unit**
	TRI M MAI	3733

-- The MAILING DATE of this communication appears on the cover sheet with the correspondence address--

This application is abandoned in view of:

1. ☑ Applicant's failure to timely file a proper reply to the Office letter mailed on 25 July 2019.
   (a) ☐ A reply was received on _____ (with a Certificate of Mailing or Transmission dated _____), which is after the expiration of the period for reply (including a total extension of time of _____ month(s)) which expired on _____.
   (b) ☐ A proposed reply was received on _____, but it does not constitute a proper reply under 37 CFR 1.113 to the final rejection. (A proper reply under 37 CFR 1.113 to a final rejection consists only of:(1) a timely filed amendment which places the application in condition for allowance; (2) a timely filed Notice of Appeal (with appeal fee); or (3) if this is utility or plant application, a timely filed Request for Continued Examination (RCE) in compliance with 37 CFR 1.114. Note that RCEs are not permitted in design applications.)
   (c) ☐ A reply was received on _____ but it does not constitute a proper reply, or a bona fide attempt at a proper reply, to the non-final rejection. See 37 CFR 1.85(a) and 1.111. (See explanation in box 7 below).
   (d) ☑ No reply has been received.

2. ☐ Applicant's failure to timely pay the required issue fee and publication fee, if applicable, within the statutory period of three months from the mailing date of the Notice of Allowance (PTOL-85).
   (a) ☐ The issue fee and publication fee, if applicable, was received on _____ (with a Certificate of Mailing or Transmission dated _____), which is after the expiration of the statutory period for payment of the issue fee (and publication fee) set in the Notice of Allowance (PTOL-85).
   (b) ☐ The submitted fee of $ _____ is insufficient. A balance of $ _____ is due.
   The issue fee required by 37CFR 1.18 is $ _____ . The publication fee, if required by 37 CFR 1.18(d), is $ _____ .
   (c) ☐ The issue fee and publication fee, if applicable, has not been received.

3. ☐ Applicant's failure to timely file corrected drawings as required by, and within the three-month period set in, the Notice of Allowability (PTO-37).
   (a) ☐ Proposed corrected drawings were received on _____ (with a Certificate of Mailing or Transmission dated _____), which is after the expiration of the period for reply.
   (b) ☐ No corrected drawings have been received.

4. ☐ The letter of express abandonment which is signed by the attorney or agent of record or other party authorized under 37 CFR 1.33 (b). See 37 CFR 1.138(b).

5. ☐ The letter of express abandonment which is signed by an attorney or agent (acting in a representative capacity under 37 CFR 1.34) upon the filing of a continuing application.

6. ☐ The decision by the Patent Trial and Appeal Board rendered on _____ and because the period for seeking court review of the decision has expired and there are no allowed claims.

7. ☐ The dismissal of the appeal in an application having no allowed claims. (When an appeal is dismissed in an application having no allowed claims the application stands abandoned. See MPEP 1215.04 subsections I-V for an explanation of the reasons why an appeal is dismissed.)

8. ☐ The reason(s) below:

_____

/TRI M MAI/ Examiner, Art Unit 3733	

Petitions to revive under 37 CFR 1.137, or requests to withdraw the holding of abandonment under 37 CFR 1.181, should be promptly filed to minimize any negative effects on patent term.