US007689252B2

(12) **United States Patent**
Nishida et al.

(10) **Patent No.: US 7,689,252 B2**
(45) **Date of Patent: Mar. 30, 2010**

(54) **METHOD AND SYSTEM FOR PROCESSING INFORMATION**

(75) Inventors: **Yoshifumi Nishida**, Kanagawa (JP); **Atsushi Shionozaki**, Tokyo (JP)

(73) Assignee: **Sony Corporation**, Tokyo (JP)

(*) Notice: Subject to any disclaimer, the term of this patent is extended or adjusted under 35 U.S.C. 154(b) by 408 days.

(21) Appl. No.: **11/447,155**

(22) Filed: **Jun. 6, 2006**

(65) **Prior Publication Data**

US 2007/0113092 A1 May 17, 2007

(30) **Foreign Application Priority Data**

Jun. 7, 2005 (JP) P2005-167234

(51) **Int. Cl.**
H04M 1/00 (2006.01)

(52) **U.S. Cl.** **455/562.1**; 455/411; 370/339; 375/262; 375/267

(58) **Field of Classification Search** 455/435.1, 455/411, 562.1; 370/339; 375/262, 267
See application file for complete search history.

(56) **References Cited**

U.S. PATENT DOCUMENTS

6,141,558 A * 10/2000 Chen 455/456.1
2004/0038713 A1 * 2/2004 Okawa et al. 455/561
2004/0257274 A1 * 12/2004 Benco et al. 342/357.1
2005/0014503 A1 * 1/2005 Nakakita et al. 455/435.1
2005/0280574 A1 * 12/2005 Tafas et al. 342/126
2007/0066234 A1 * 3/2007 Lastinger et al. 455/67.11
2007/0183358 A1 * 8/2007 Cai 370/328

FOREIGN PATENT DOCUMENTS

JP 2002-16968 1/2002

* cited by examiner

Primary Examiner—Vincent P Harper
Assistant Examiner—Fred A Casca
(74) *Attorney, Agent, or Firm*—Finnegan, Henderson, Farabow, Garrett & Dunner, L.L.P.

(57) **ABSTRACT**

An information processing system includes an information providing apparatus for providing a service, and a mobile terminal for receiving the service from the information providing apparatus. The information providing apparatus includes a plurality of directional antennas arranged in a predetermined space and forming at least one particular area in which communication coverage areas of the directional antennas overlap each other, and a plurality of data transmitting units for transmitting predetermined data to the mobile terminal in the particular area using the directional antennas thereof. The mobile terminal includes a data receiving unit for receiving in the particular area the predetermined data that the data transmitting unit has transmitted via the directional antenna having the particular area as the communication coverage area, and a data processing unit for processing the predetermined data received by the data receiving unit.

7 Claims, 24 Drawing Sheets

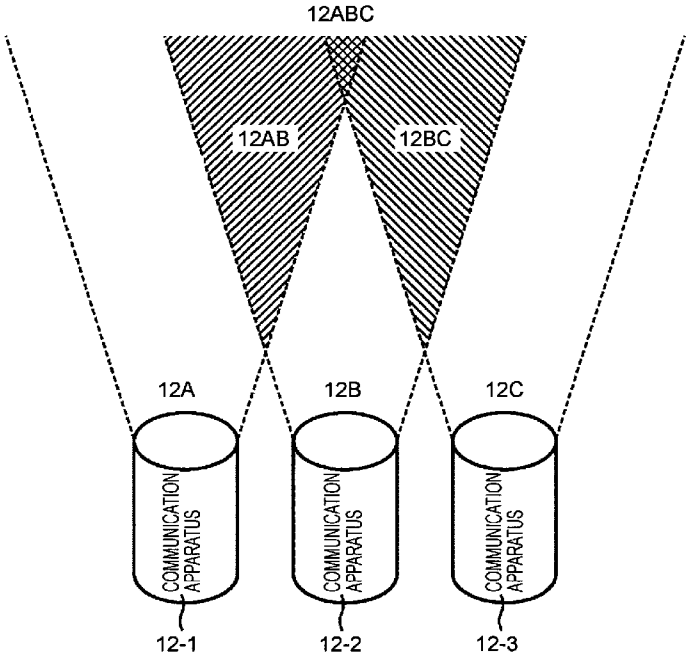

SAMSUNG 1032

FIG. 1

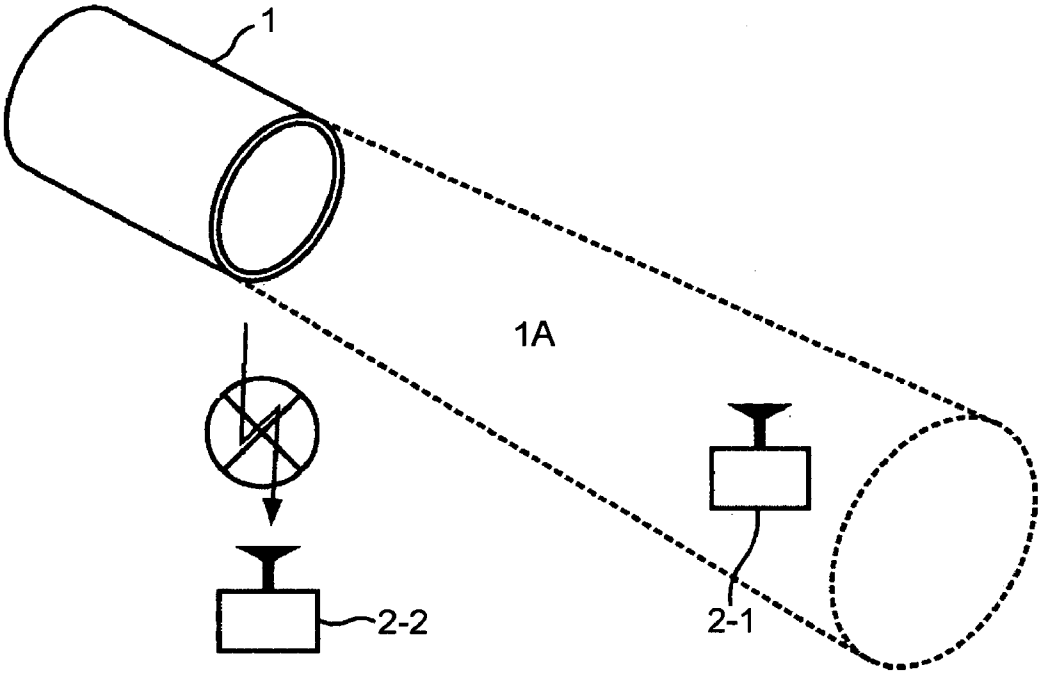

FIG. 2

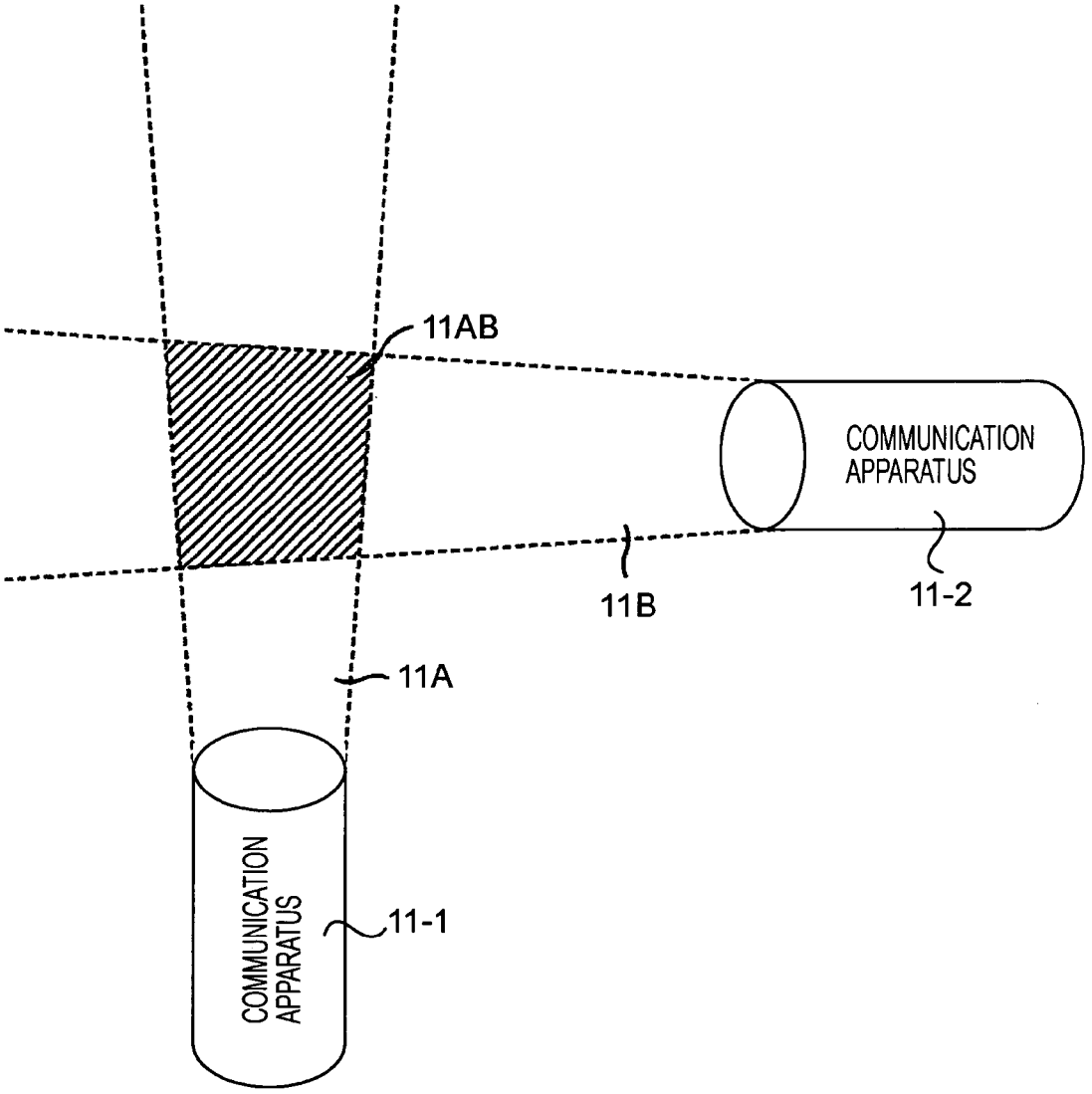
11AB
COMMUNICATION APPARATUS
11B
11-2
11A
COMMUNICATION APPARATUS
11-1

FIG. 3

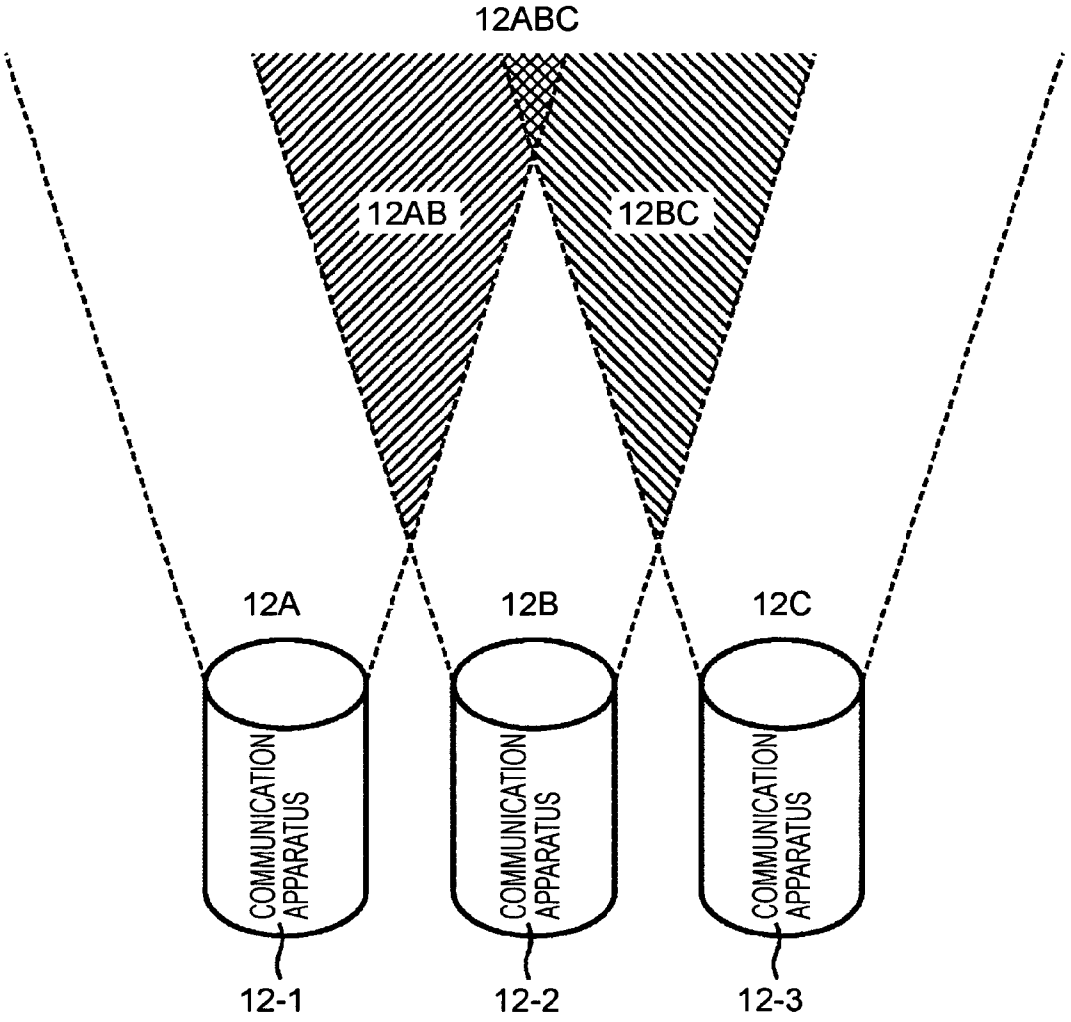
12ABC
12AB
12BC
12A
12B
12C
COMMUNICATION APPARATUS
COMMUNICATION APPARATUS
COMMUNICATION APPARATUS
12-1
12-2
12-3

FIG. 4

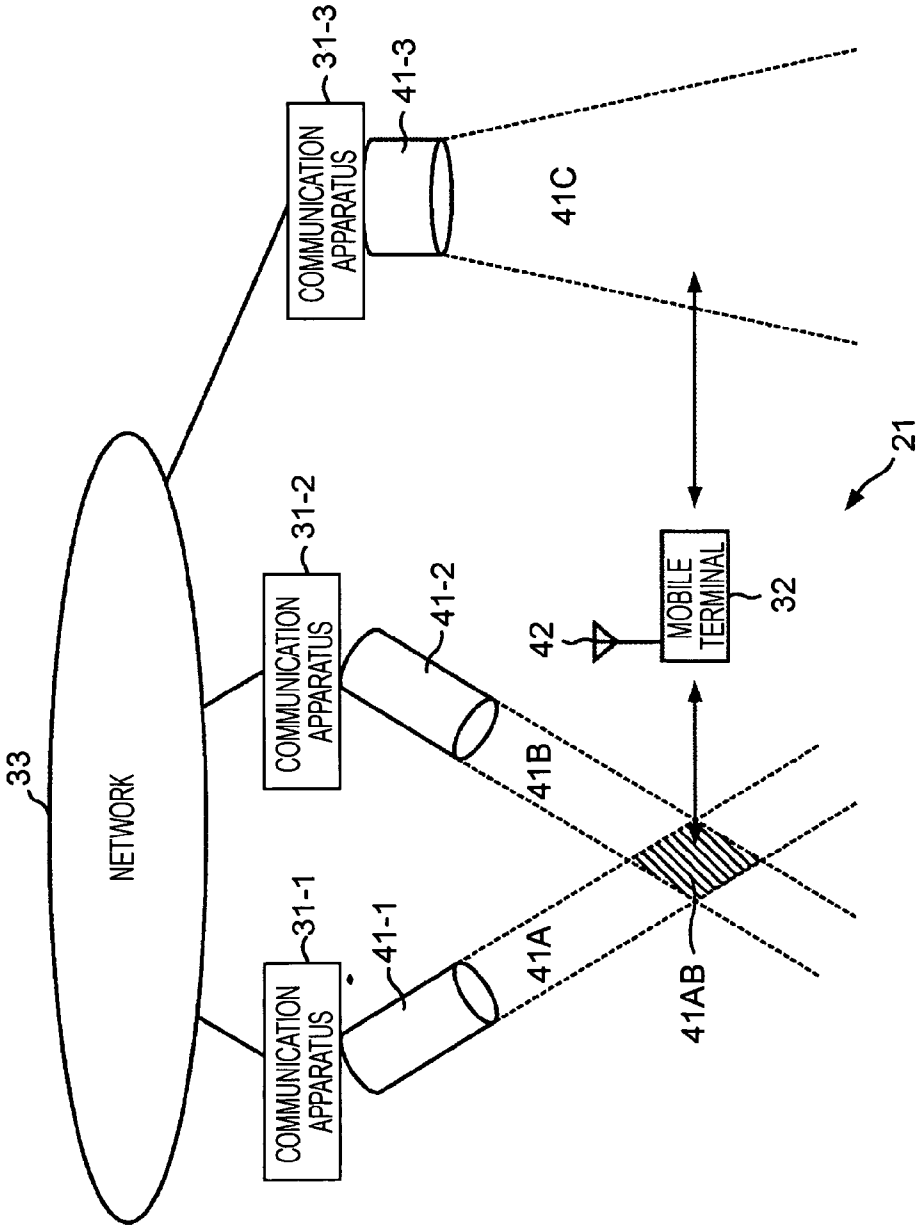
33
NETWORK
COMMUNICATION APPARATUS
31-1
COMMUNICATION APPARATUS
31-2
COMMUNICATION APPARATUS
31-3
41-1
41-2
41-3
41A
41B
41C
41AB
42
MOBILE TERMINAL
32
21

FIG. 5

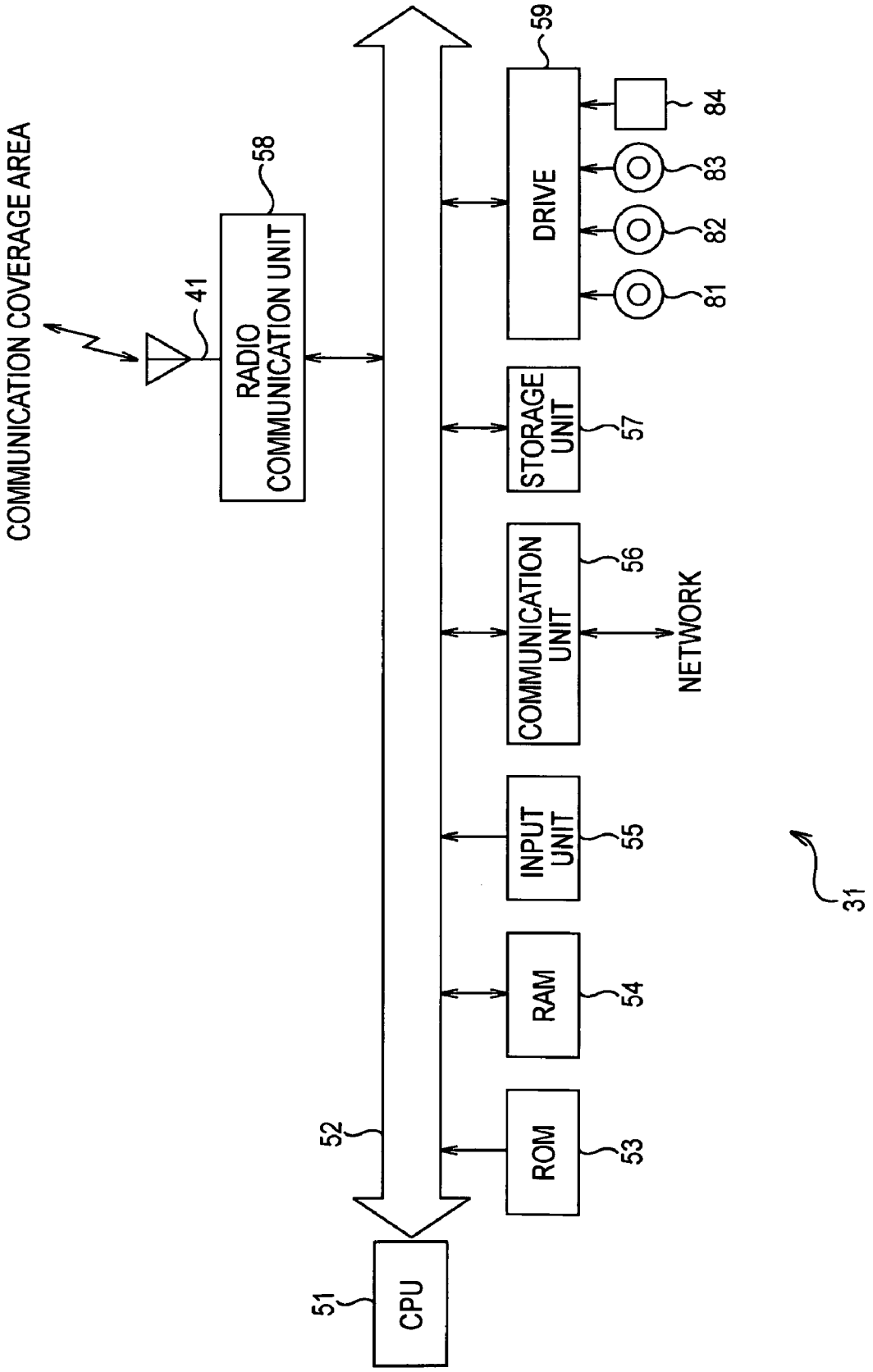
COMMUNICATION COVERAGE AREA
41
RADIO COMMUNICATION UNIT
58
CPU
51
52
ROM
53
RAM
54
INPUT UNIT
55
COMMUNICATION UNIT
56
NETWORK
STORAGE UNIT
57
DRIVE
59
81
82
83
84
31

FIG. 6

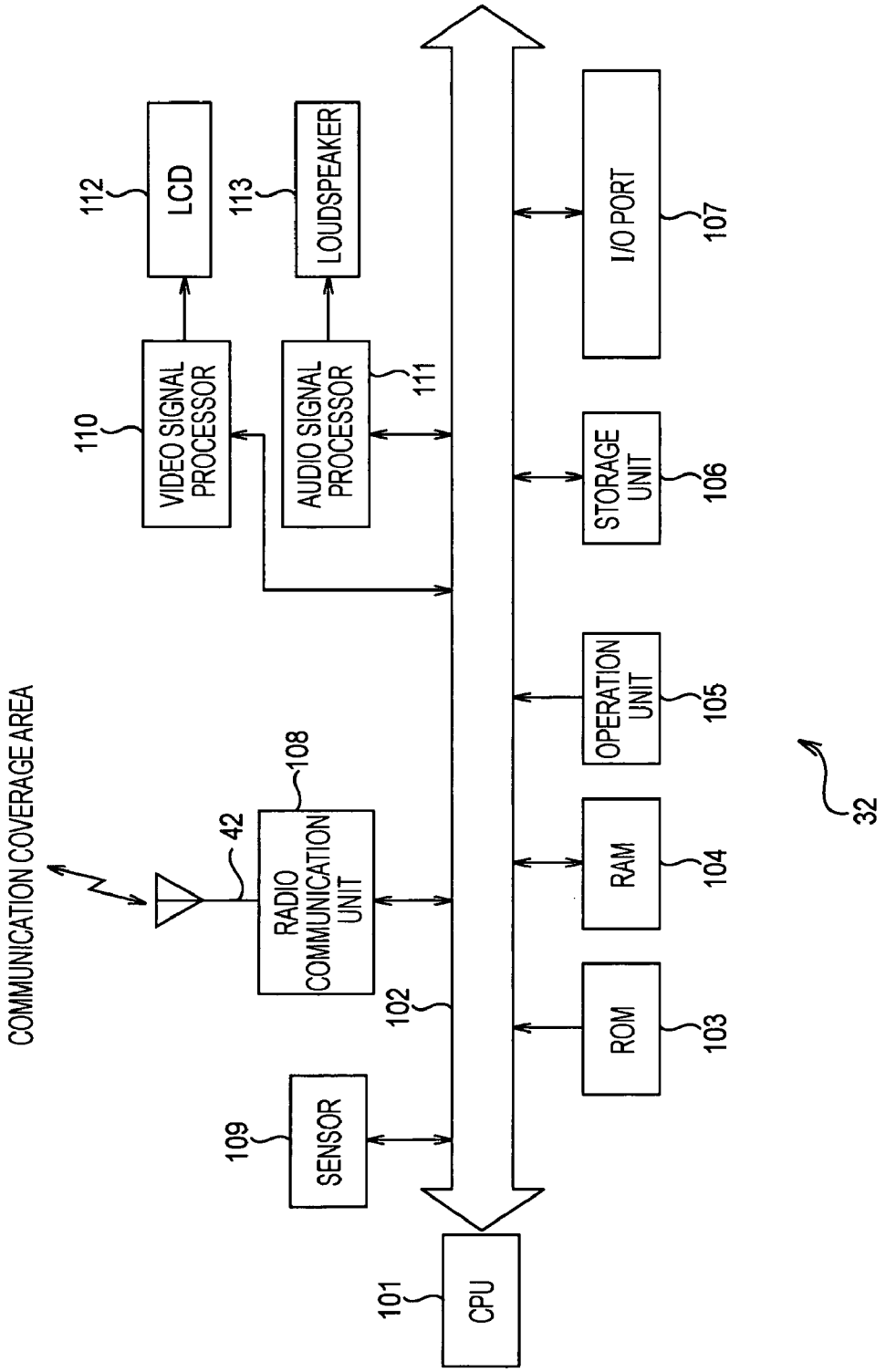
COMMUNICATION COVERAGE AREA
42
108
RADIO COMMUNICATION UNIT
109
SENSOR
102
101
CPU
110
VIDEO SIGNAL PROCESSOR
112
LCD
111
AUDIO SIGNAL PROCESSOR
113
LOUDSPEAKER
ROM
103
RAM
104
OPERATION UNIT
105
STORAGE UNIT
106
I/O PORT
107
32

FIG. 7

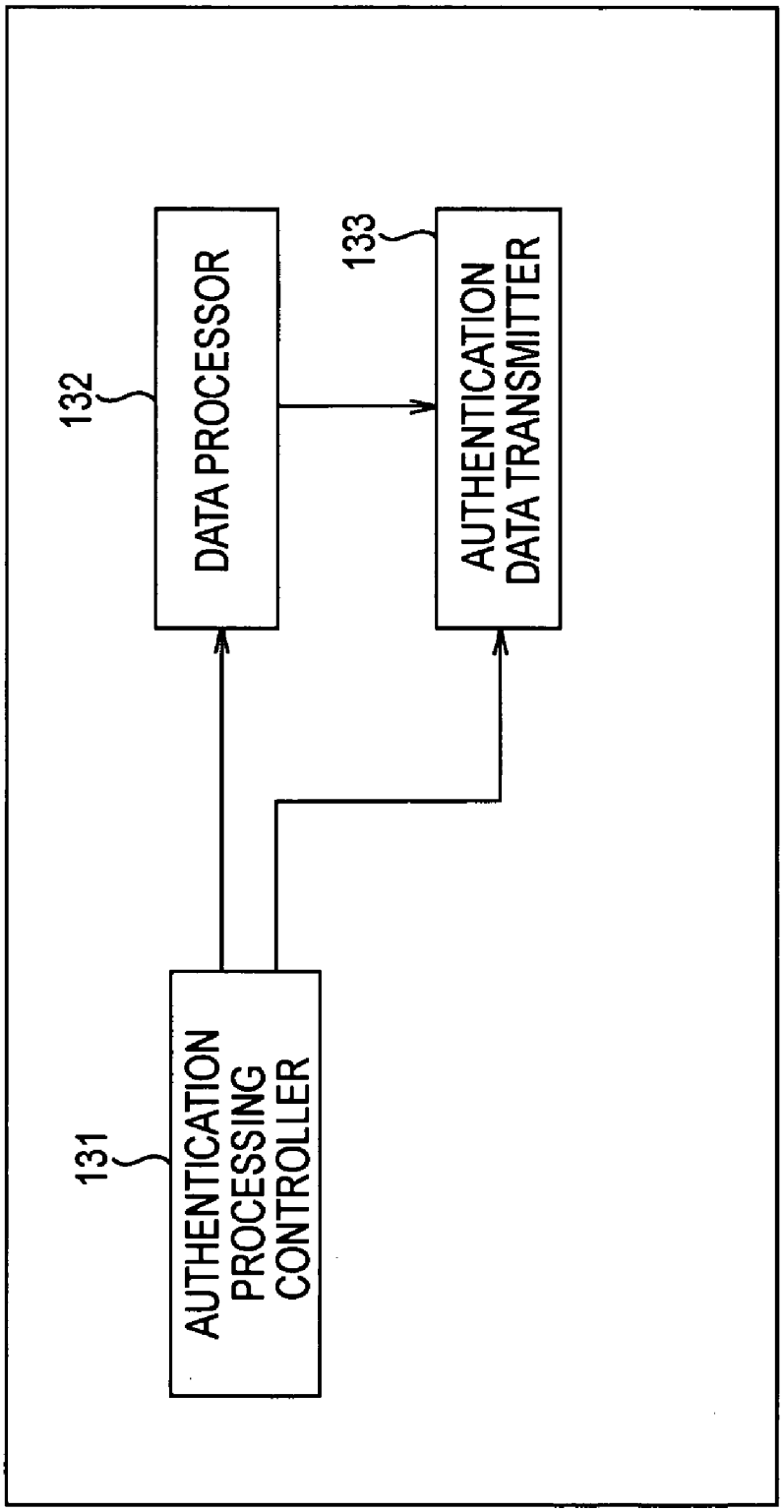
131
AUTHENTICATION PROCESSING CONTROLLER
132
DATA PROCESSOR
133
AUTHENTICATION DATA TRANSMITTER

FIG. 8

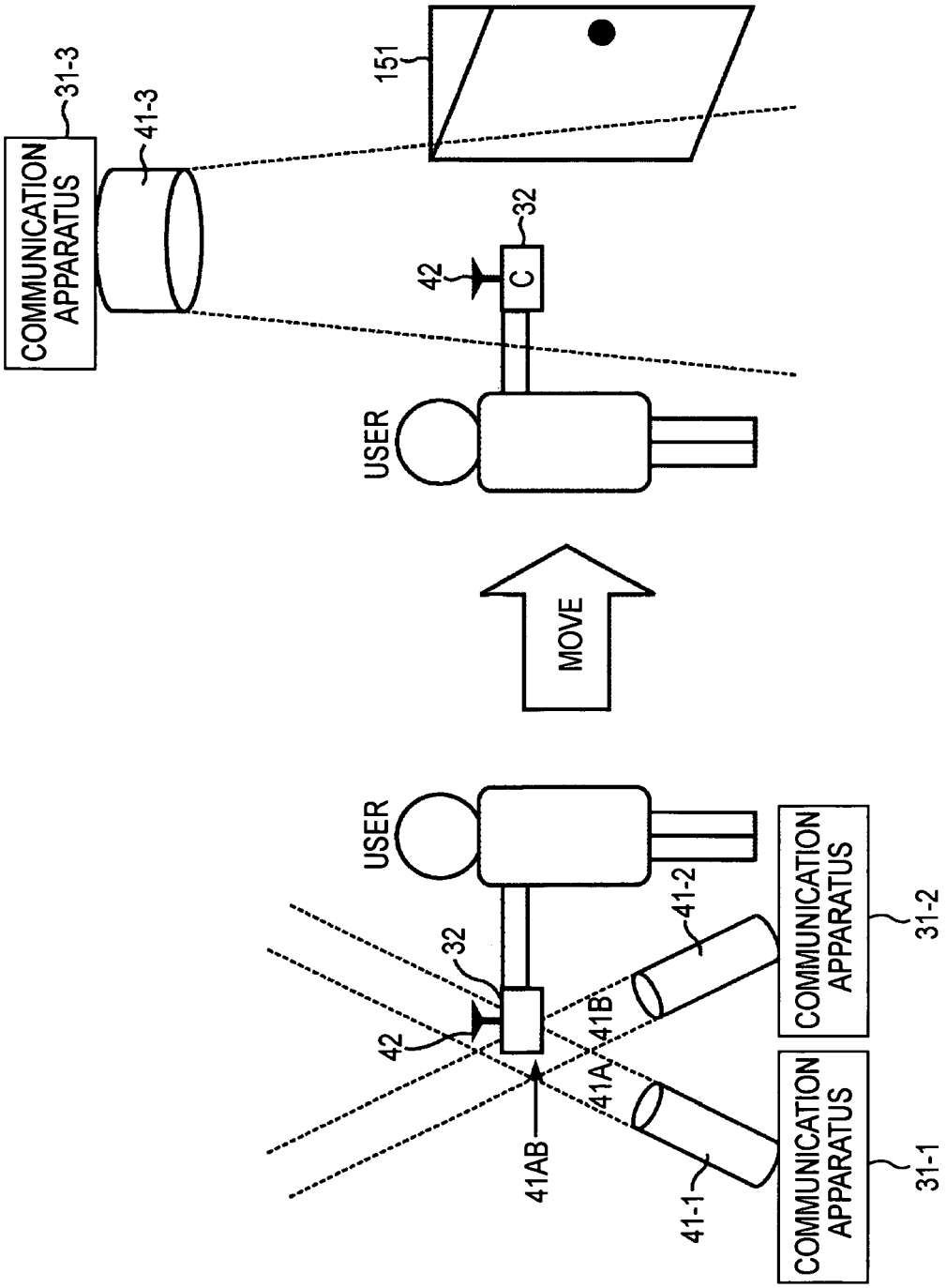
COMMUNICATION APPARATUS
31-3
41-3
151
USER
42
C
32
MOVE
USER
42
32
41AB
41A
41B
41-1
41-2
COMMUNICATION APPARATUS
31-1
COMMUNICATION APPARATUS
31-2

FIG. 9

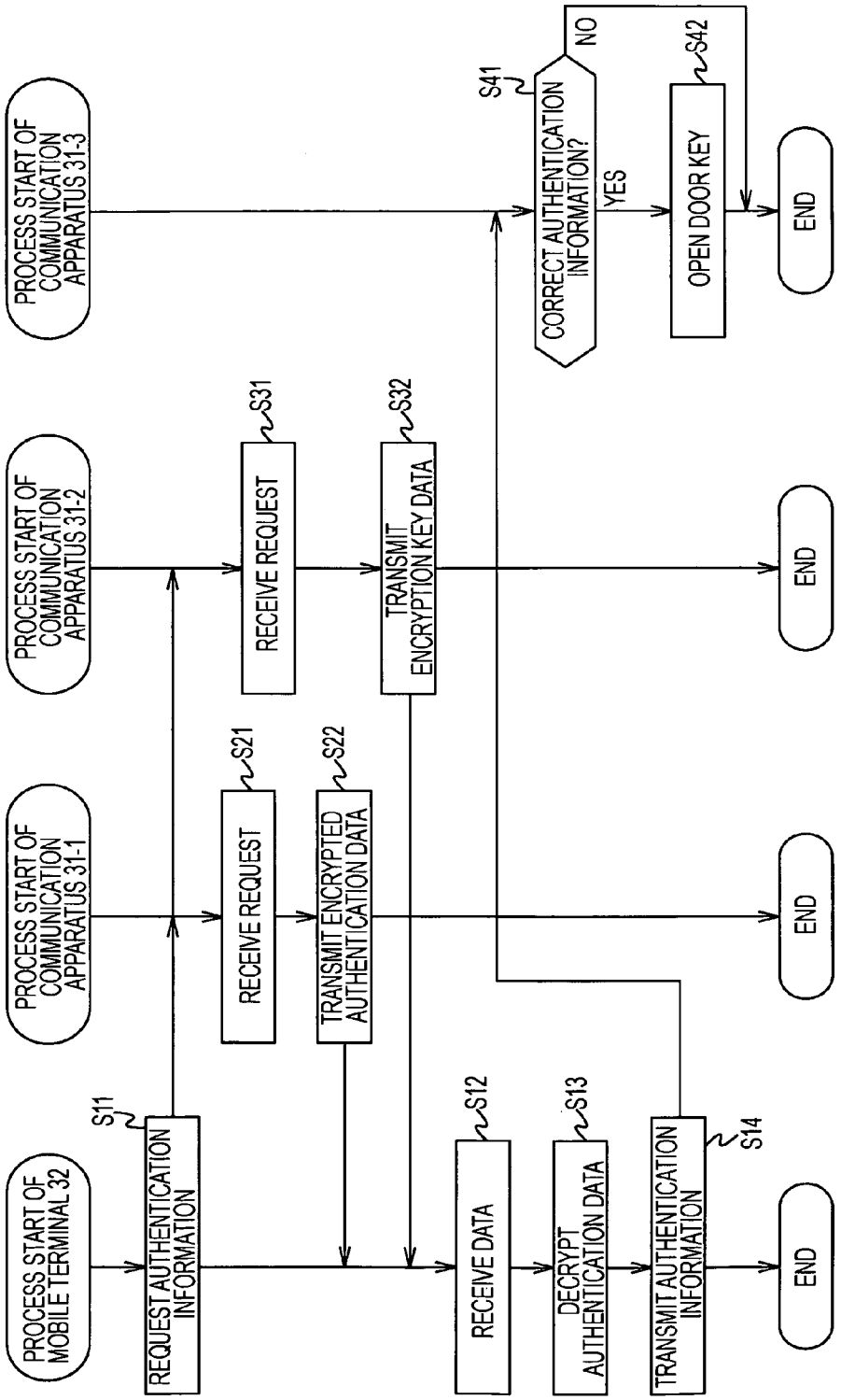
PROCESS START OF MOBILE TERMINAL 32
PROCESS START OF COMMUNICATION APPARATUS 31-1
PROCESS START OF COMMUNICATION APPARATUS 31-2
PROCESS START OF COMMUNICATION APPARATUS 31-3
S11
REQUEST AUTHENTICATION INFORMATION
S21
RECEIVE REQUEST
S22
TRANSMIT ENCRYPTED AUTHENTICATION DATA
S31
RECEIVE REQUEST
S32
TRANSMIT ENCRYPTION KEY DATA
S12
RECEIVE DATA
S13
DECRYPT AUTHENTICATION DATA
S14
TRANSMIT AUTHENTICATION INFORMATION
S41
CORRECT AUTHENTICATION INFORMATION?
YES
NO
S42
OPEN DOOR KEY
END
END
END
END

FIG. 10

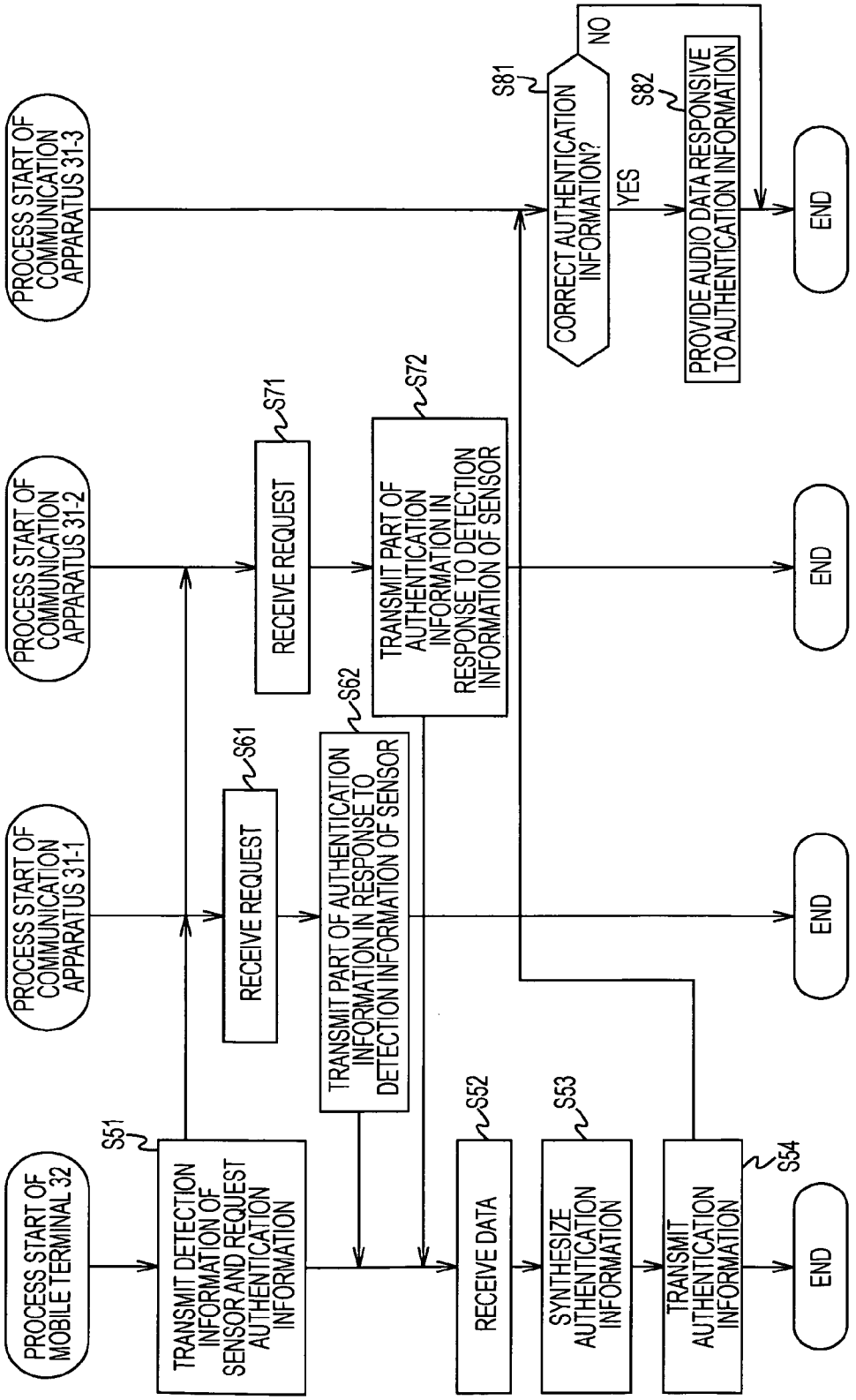
PROCESS START OF MOBILE TERMINAL 32
PROCESS START OF COMMUNICATION APPARATUS 31-1
PROCESS START OF COMMUNICATION APPARATUS 31-2
PROCESS START OF COMMUNICATION APPARATUS 31-3
S51
TRANSMIT DETECTION INFORMATION OF SENSOR AND REQUEST AUTHENTICATION INFORMATION
S61
RECEIVE REQUEST
S62
TRANSMIT PART OF AUTHENTICATION INFORMATION IN RESPONSE TO DETECTION INFORMATION OF SENSOR
S71
RECEIVE REQUEST
S72
TRANSMIT PART OF AUTHENTICATION INFORMATION IN RESPONSE TO DETECTION INFORMATION OF SENSOR
S52
RECEIVE DATA
S53
SYNTHESIZE AUTHENTICATION INFORMATION
S54
TRANSMIT AUTHENTICATION INFORMATION
S81
CORRECT AUTHENTICATION INFORMATION?
YES
NO
S82
PROVIDE AUDIO DATA RESPONSIVE TO AUTHENTICATION INFORMATION
END
END
END
END

FIG. 11

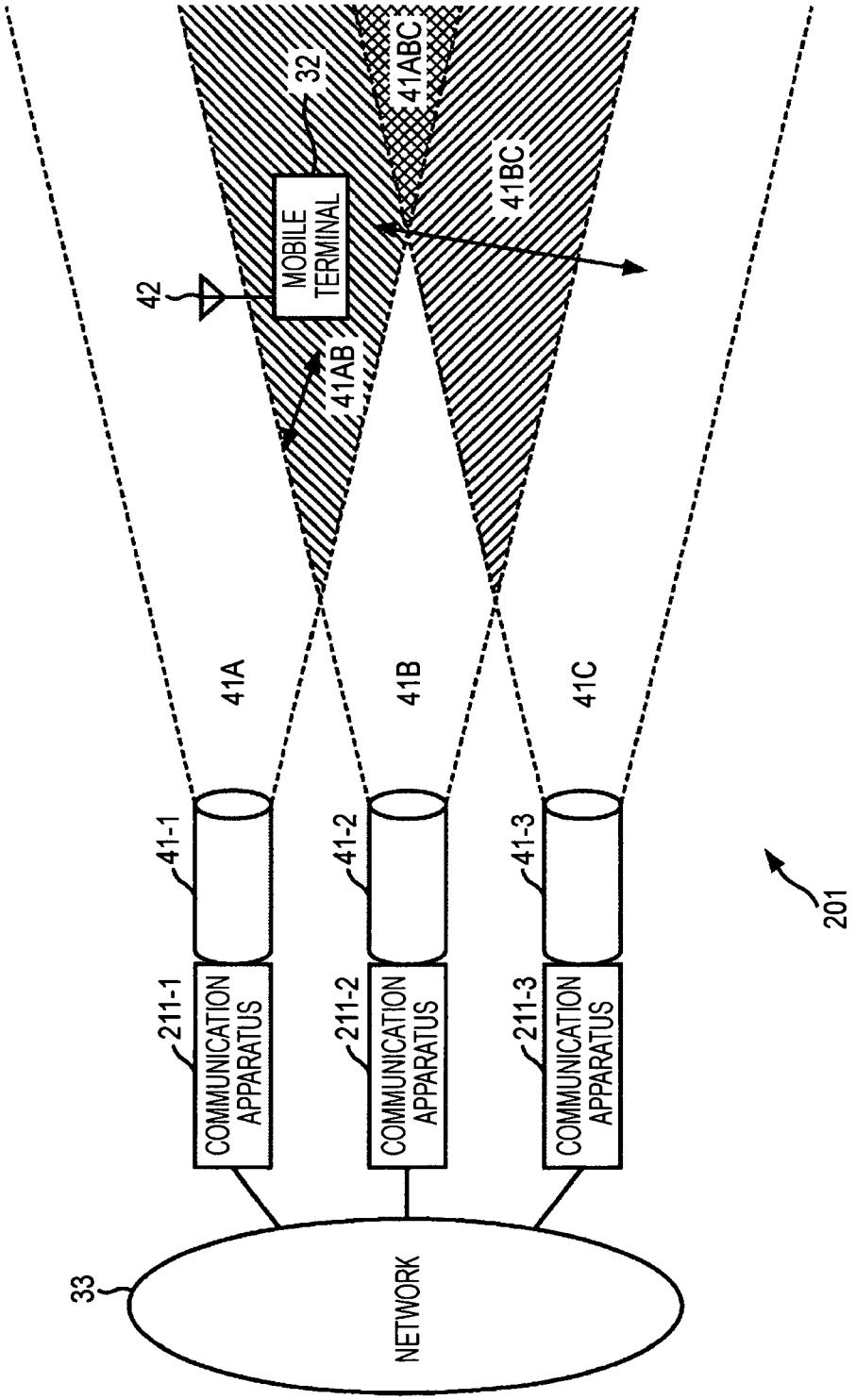
32
41ABC
41BC
MOBILE TERMINAL
42
41AB
41A
41B
41C
41-1
41-2
41-3
211-1
211-2
211-3
COMMUNICATION APPARATUS
COMMUNICATION APPARATUS
COMMUNICATION APPARATUS
33
NETWORK
201

FIG. 12

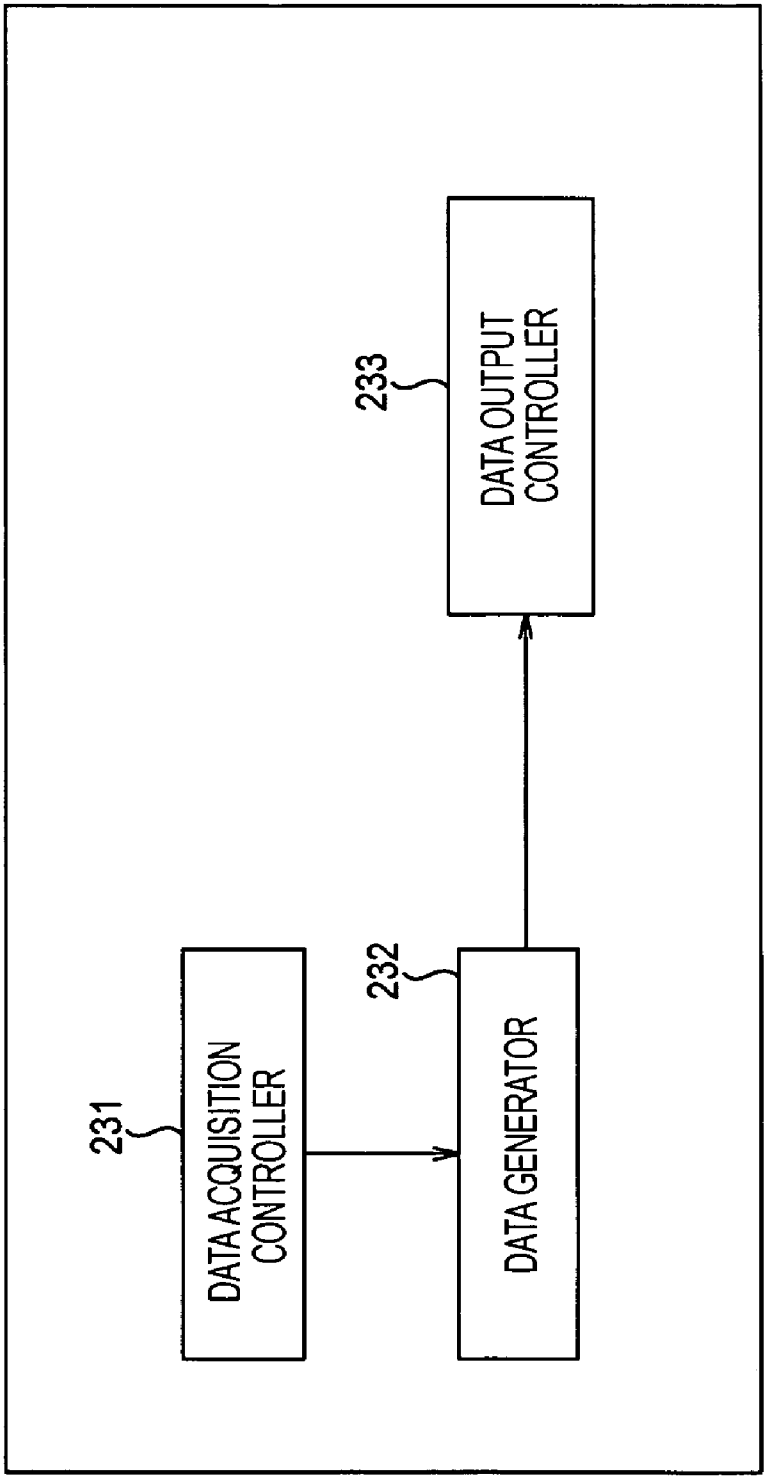
231
DATA ACQUISITION CONTROLLER
232
DATA GENERATOR
233
DATA OUTPUT CONTROLLER

FIG. 13

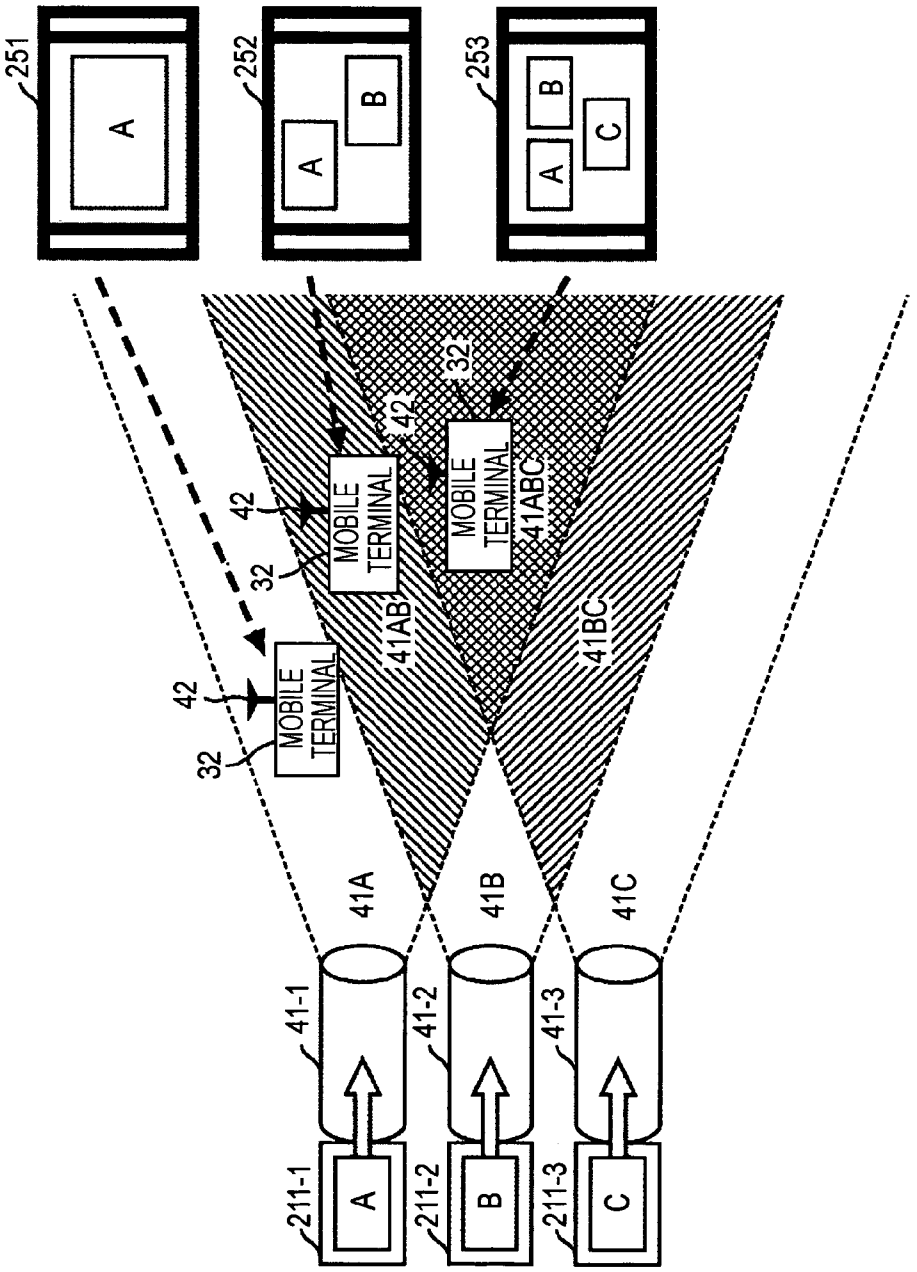
251
252
253
A
A
B
A
B
C
MOBILE TERMINAL
MOBILE TERMINAL
MOBILE TERMINAL
42
32
42
32
42
32
41AB
41ABC
41BC
41A
41B
41C
41-1
41-2
41-3
211-1
211-2
211-3
A
B
C

FIG. 14

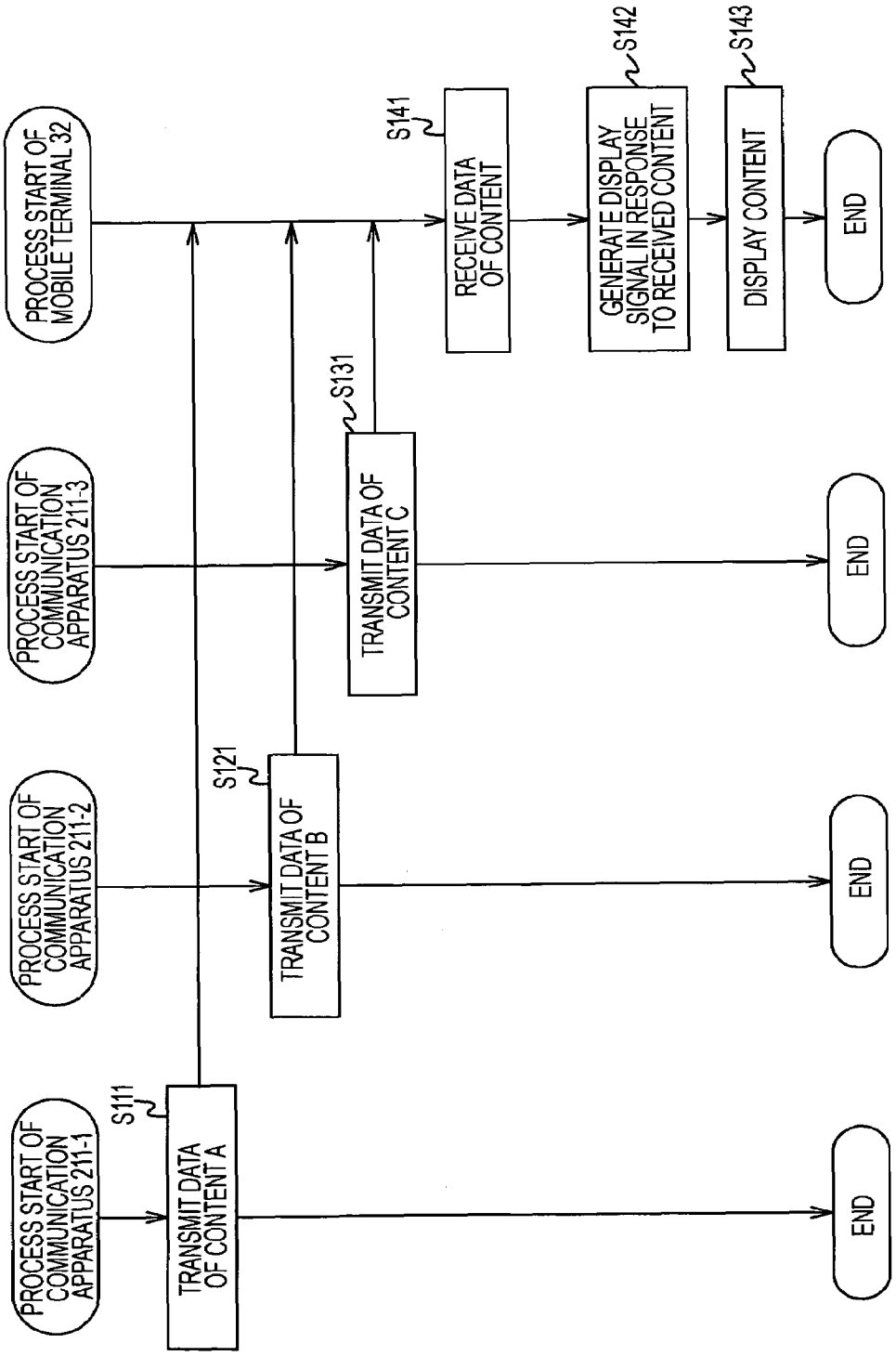
PROCESS START OF COMMUNICATION APPARATUS 211-1
PROCESS START OF COMMUNICATION APPARATUS 211-2
PROCESS START OF COMMUNICATION APPARATUS 211-3
PROCESS START OF MOBILE TERMINAL 32
S111
TRANSMIT DATA OF CONTENT A
S121
TRANSMIT DATA OF CONTENT B
S131
TRANSMIT DATA OF CONTENT C
S141
RECEIVE DATA OF CONTENT
S142
GENERATE DISPLAY SIGNAL IN RESPONSE TO RECEIVED CONTENT
S143
DISPLAY CONTENT
END
END
END
END

FIG. 15

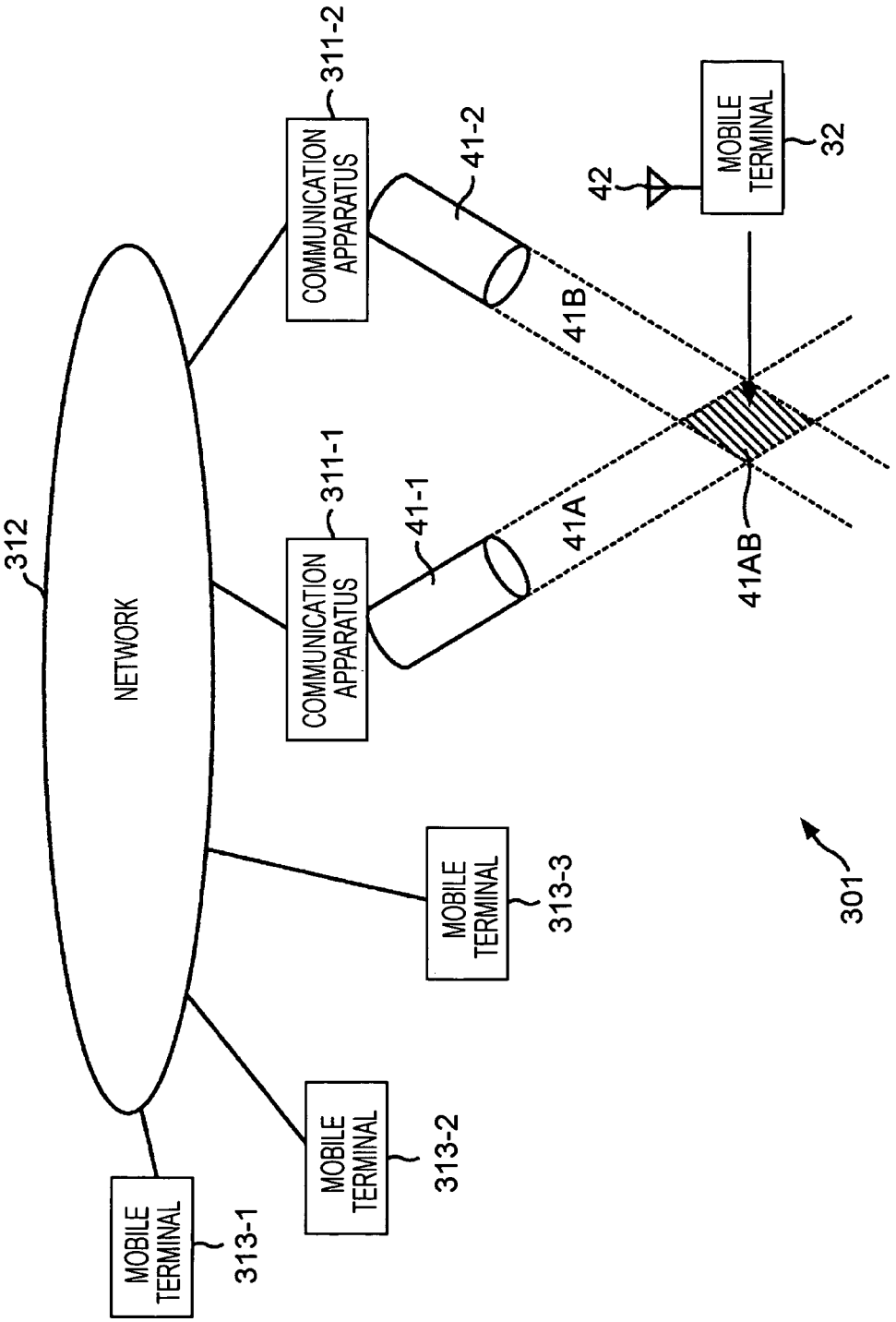
312
NETWORK
COMMUNICATION APPARATUS
311-2
41-2
41B
COMMUNICATION APPARATUS
311-1
41-1
41A
41AB
42
MOBILE TERMINAL
32
MOBILE TERMINAL
313-3
MOBILE TERMINAL
313-2
MOBILE TERMINAL
313-1
301

FIG. 16

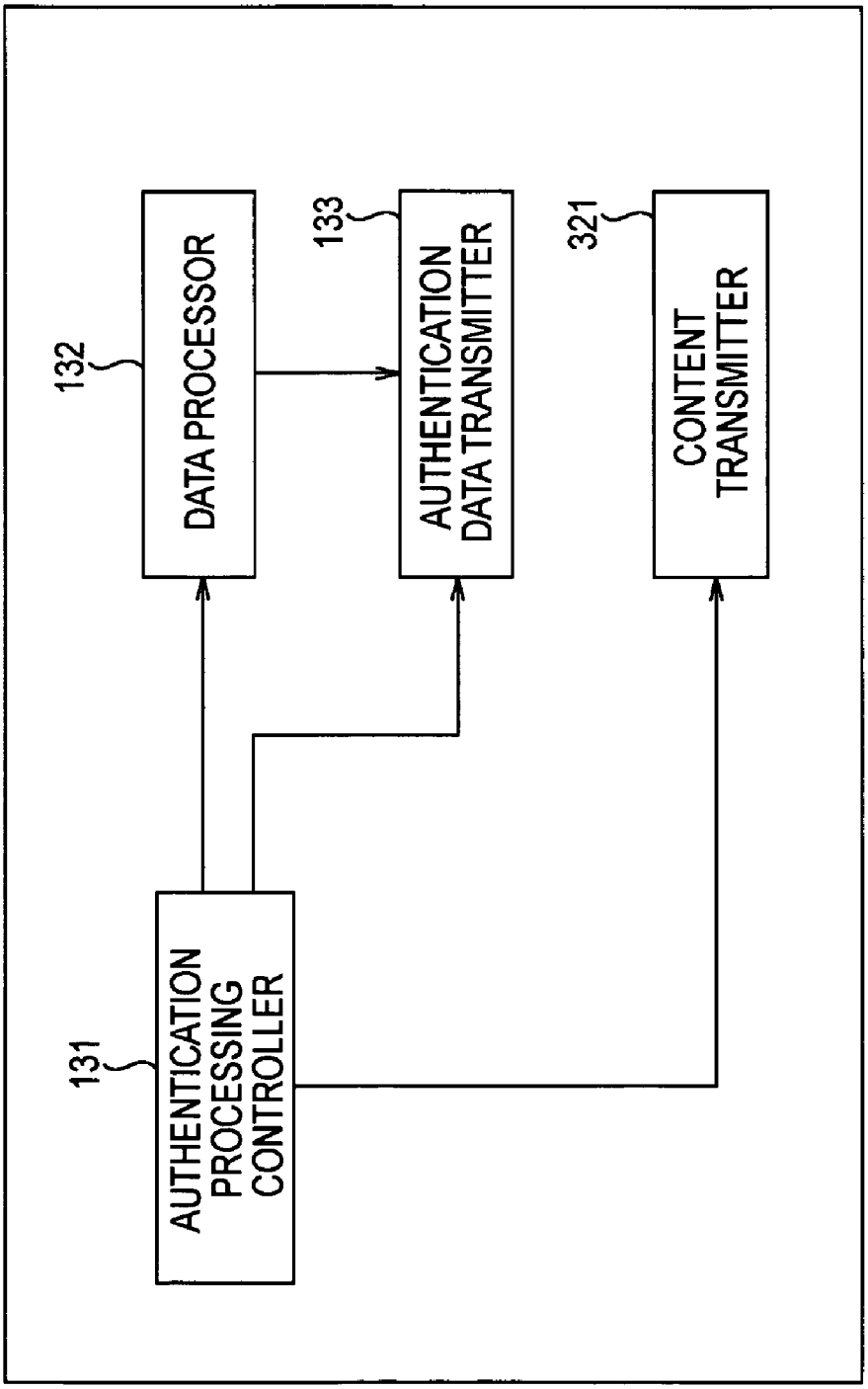
131
AUTHENTICATION PROCESSING CONTROLLER
132
DATA PROCESSOR
133
AUTHENTICATION DATA TRANSMITTER
321
CONTENT TRANSMITTER

FIG. 17

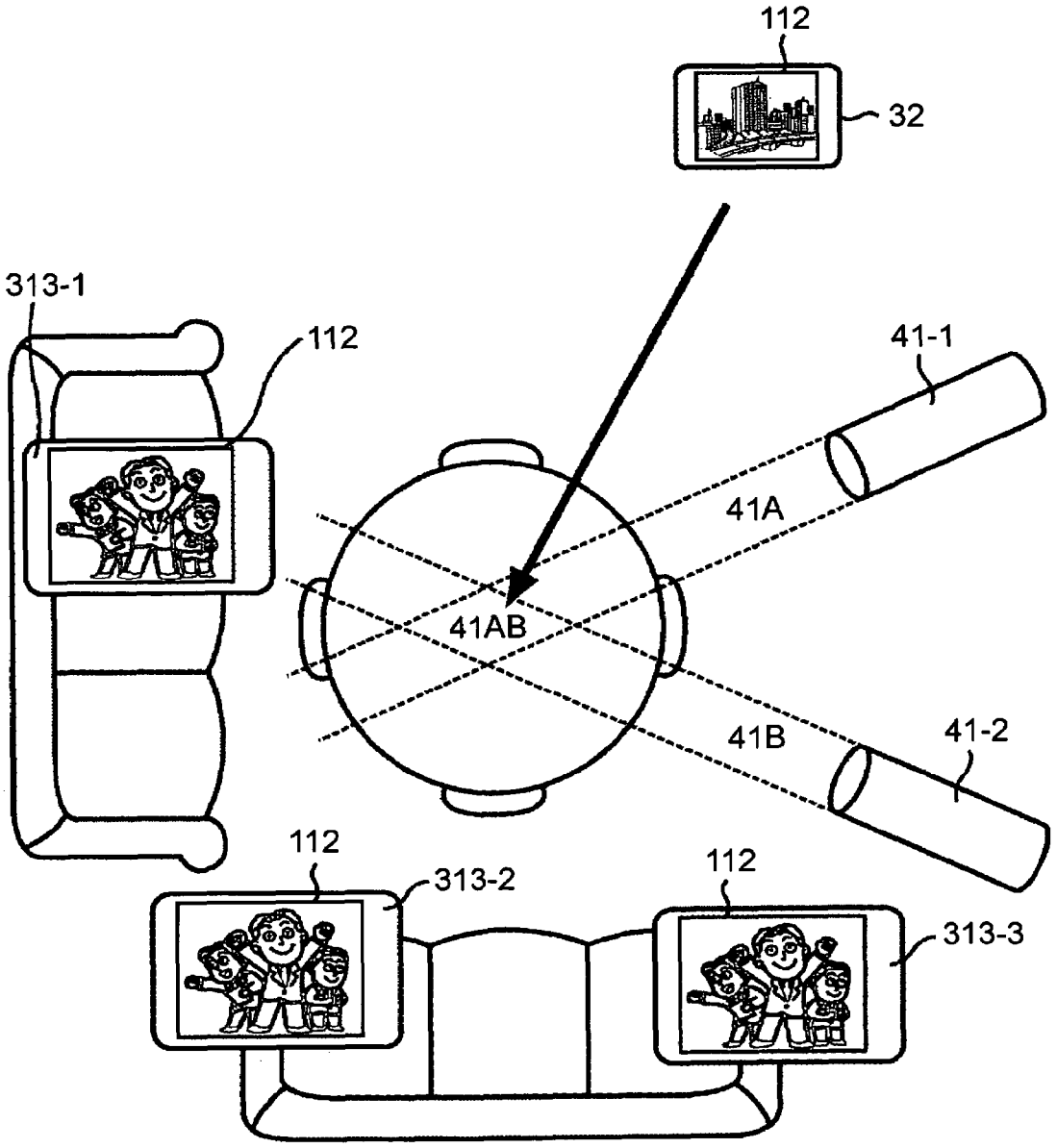

FIG. 18

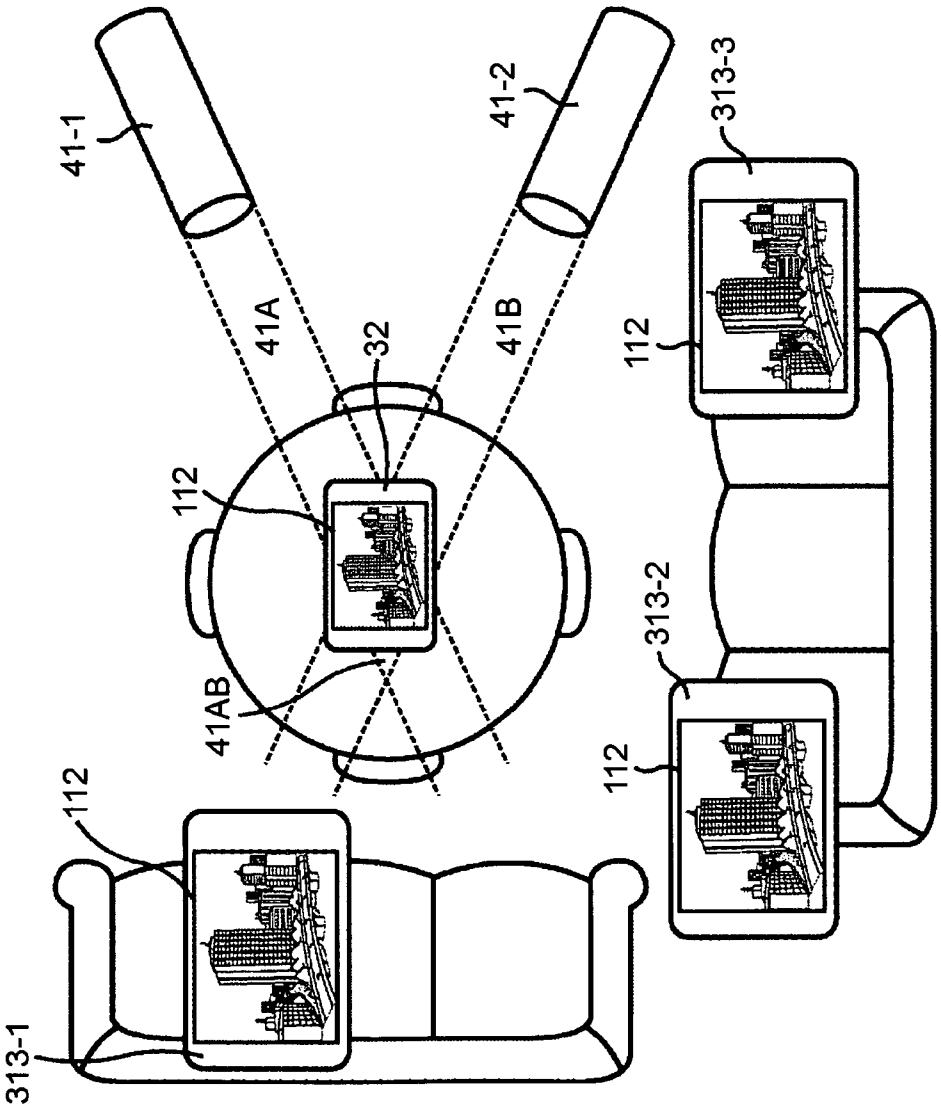

FIG. 19

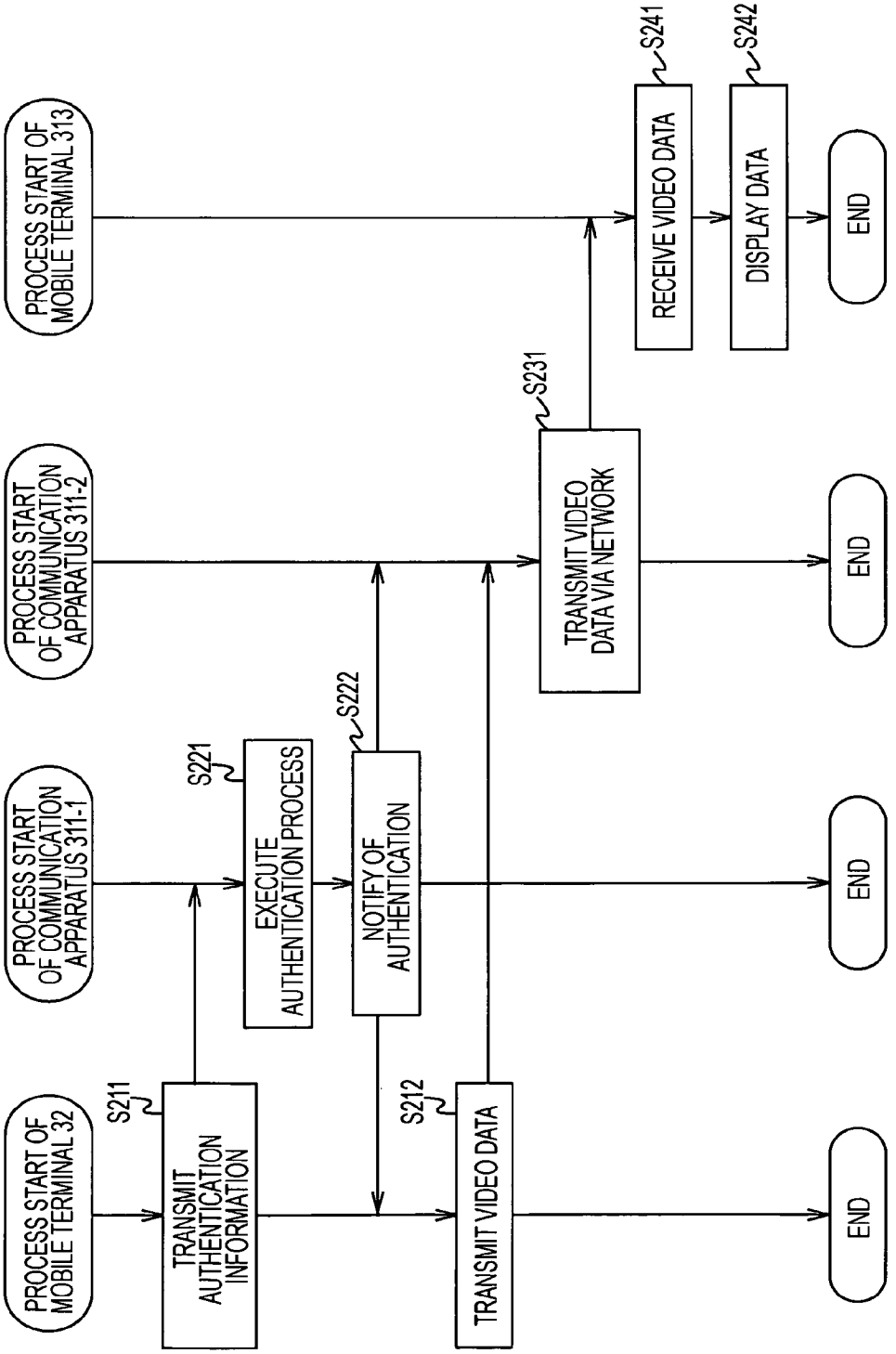
PROCESS START OF MOBILE TERMINAL 32
PROCESS START OF COMMUNICATION APPARATUS 311-1
PROCESS START OF COMMUNICATION APPARATUS 311-2
PROCESS START OF MOBILE TERMINAL 313
S211
TRANSMIT AUTHENTICATION INFORMATION
S221
EXECUTE AUTHENTICATION PROCESS
S222
NOTIFY OF AUTHENTICATION
S212
TRANSMIT VIDEO DATA
S231
TRANSMIT VIDEO DATA VIA NETWORK
S241
RECEIVE VIDEO DATA
S242
DISPLAY DATA
END
END
END
END

FIG. 20

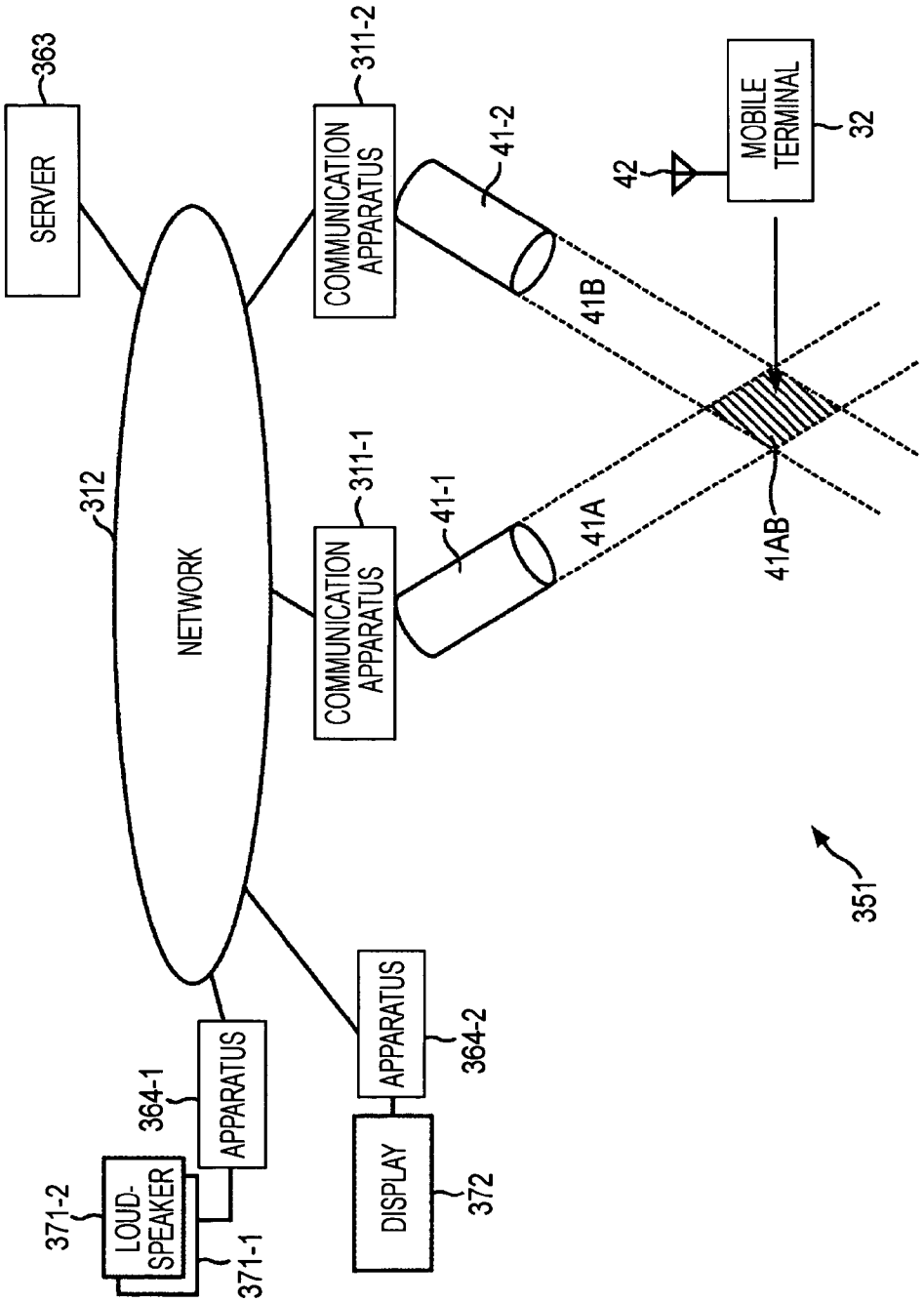
SERVER
363
NETWORK
312
COMMUNICATION APPARATUS
311-2
COMMUNICATION APPARATUS
311-1
41-2
41-1
41B
41A
41AB
42
MOBILE TERMINAL
32
351
APPARATUS
364-1
APPARATUS
364-2
LOUD-SPEAKER
371-2
371-1
DISPLAY
372

FIG. 21

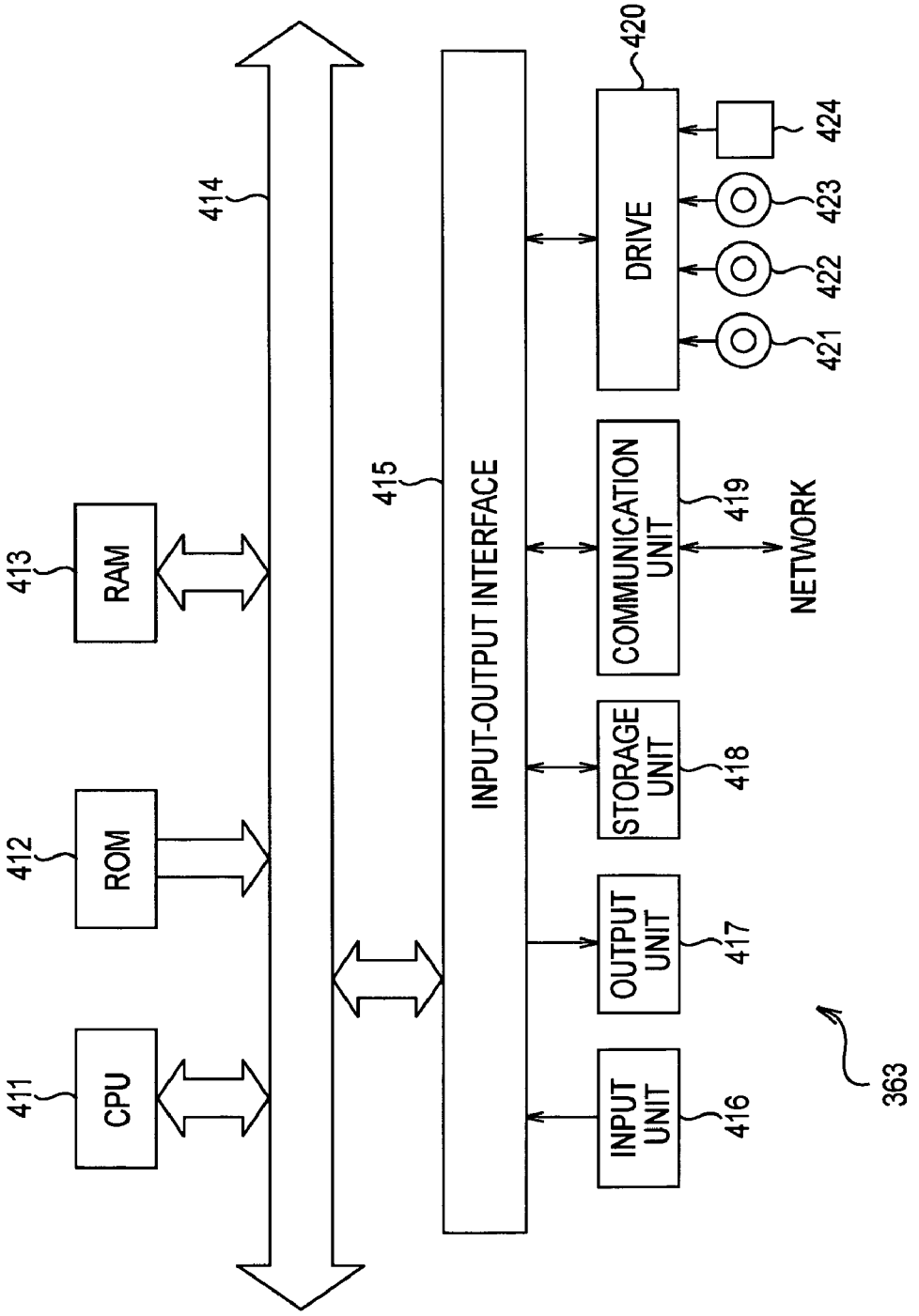
411
CPU
412
ROM
413
RAM
414
415
INPUT-OUTPUT INTERFACE
INPUT UNIT
416
OUTPUT UNIT
417
STORAGE UNIT
418
COMMUNICATION UNIT
419
NETWORK
DRIVE
420
421
422
423
424
363

FIG. 22

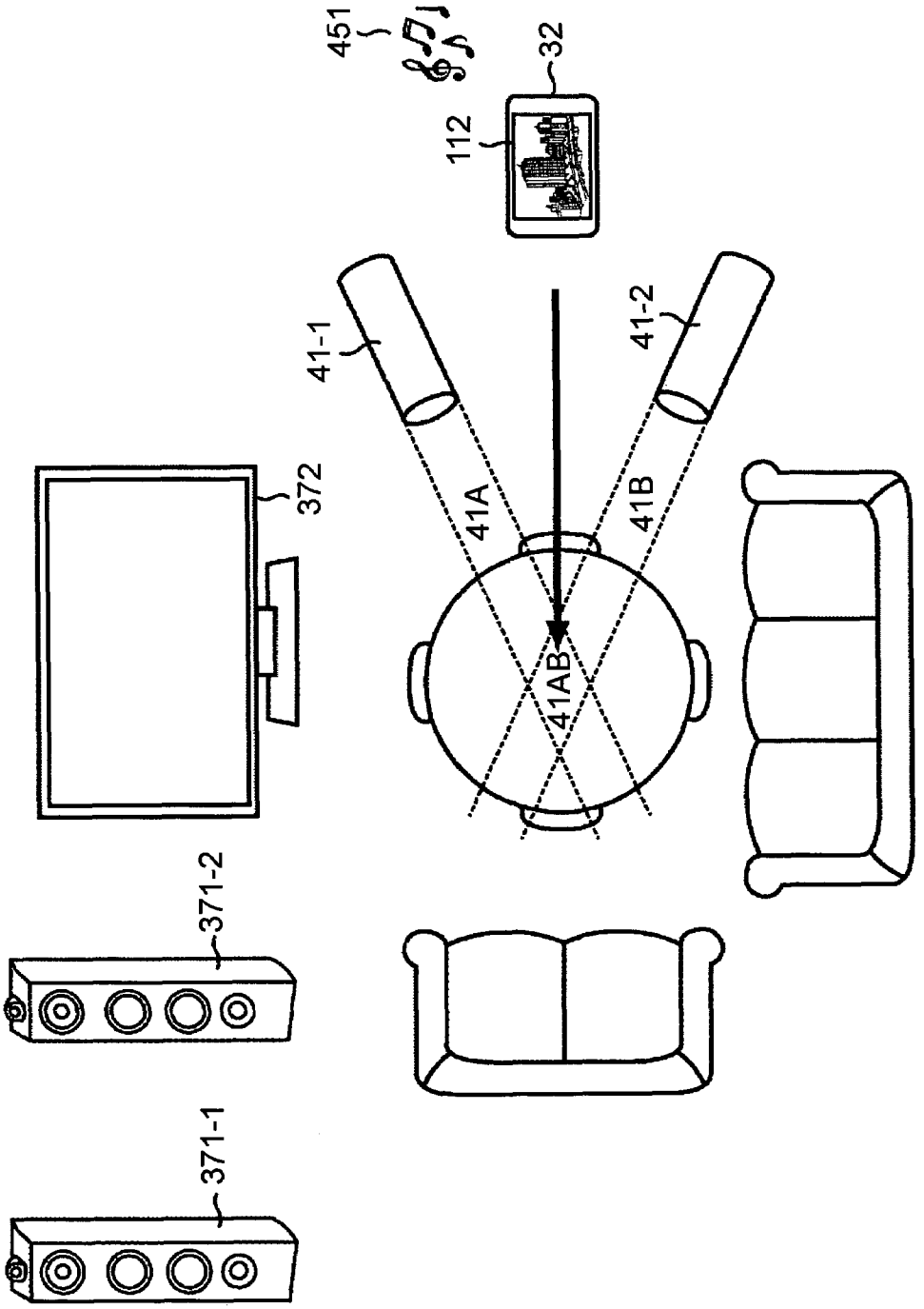

FIG. 23

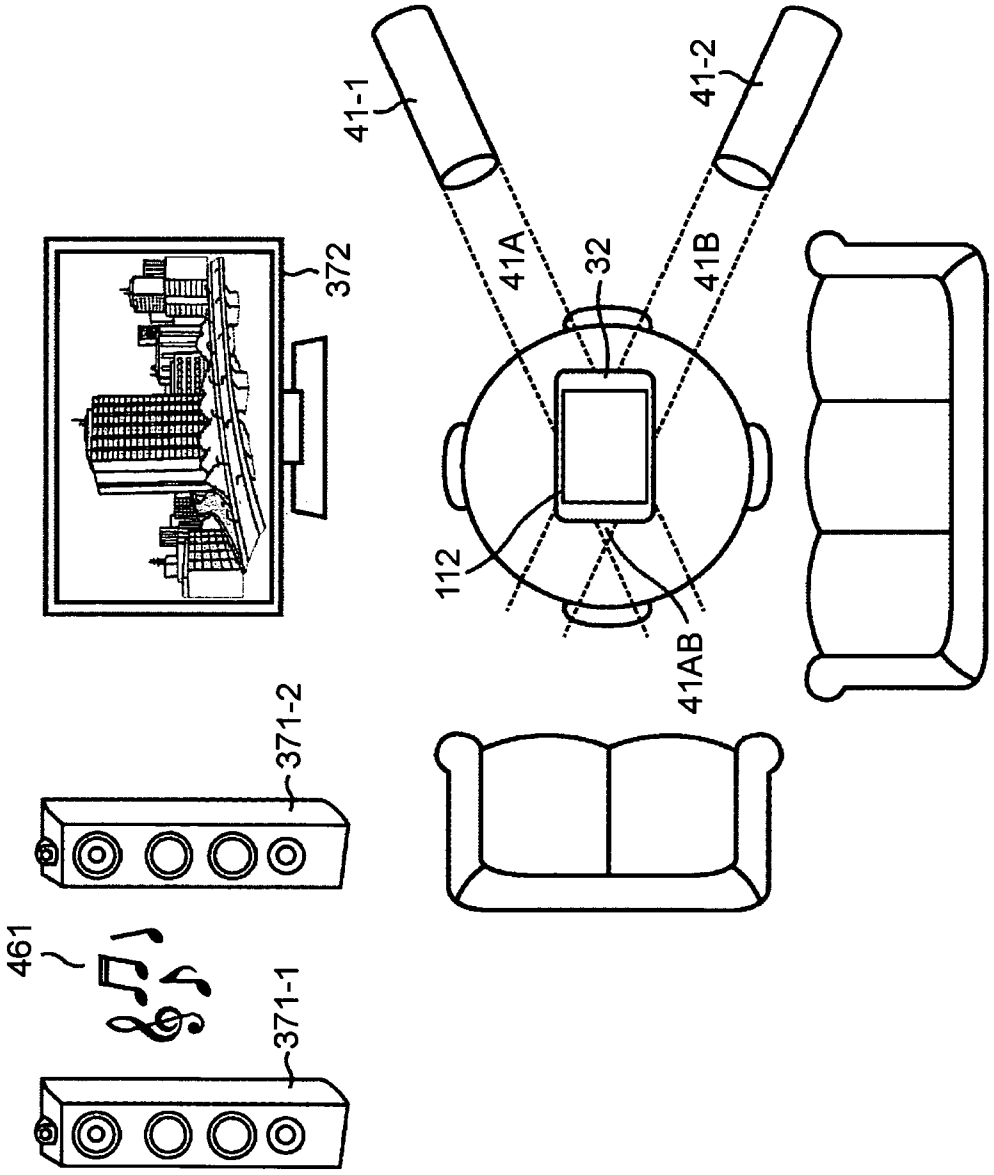

FIG. 24

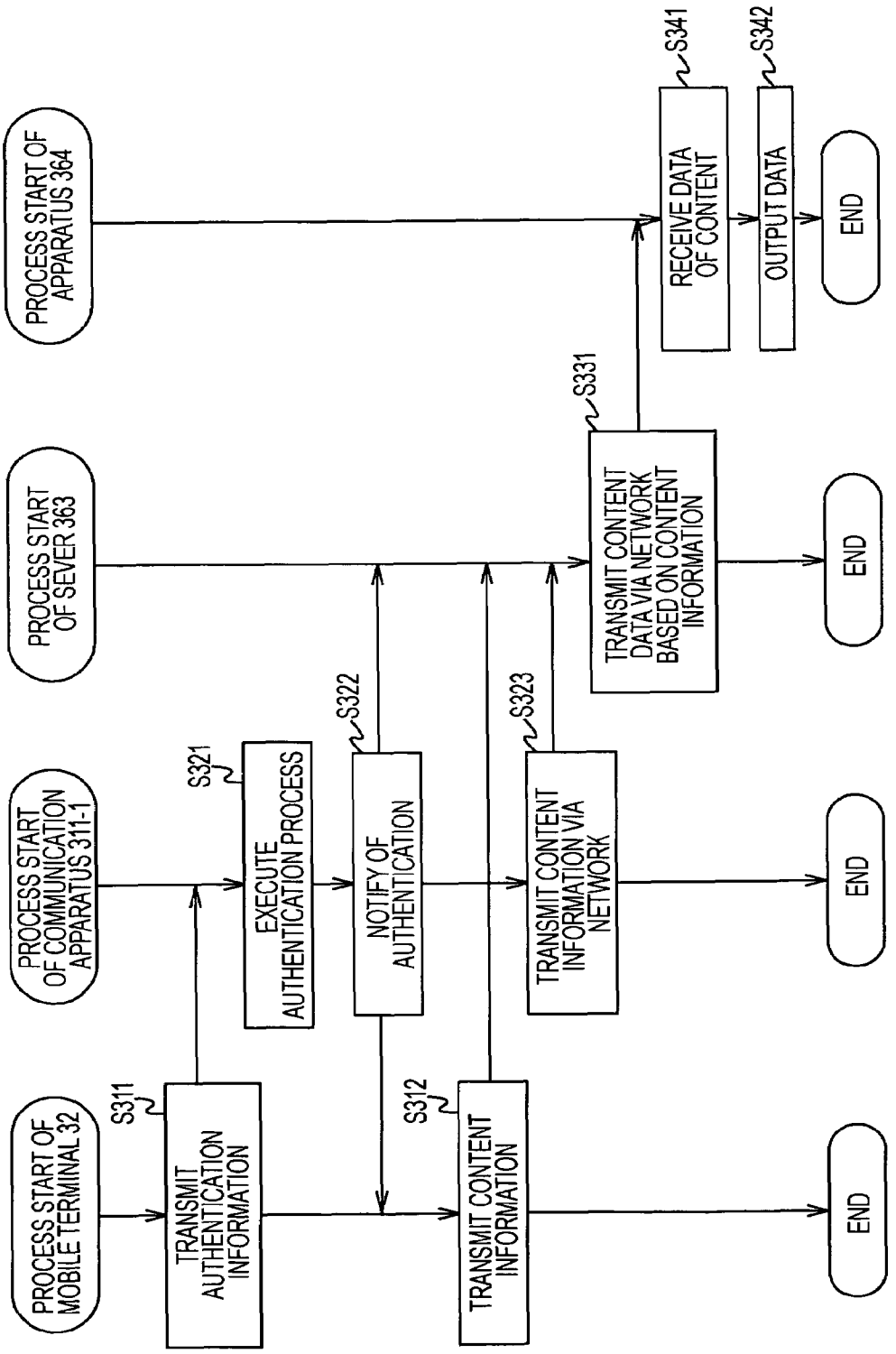
PROCESS START OF MOBILE TERMINAL 32
PROCESS START OF COMMUNICATION APPARATUS 311-1
PROCESS START OF SEVER 363
PROCESS START OF APPARATUS 364
S311
TRANSMIT AUTHENTICATION INFORMATION
S321
EXECUTE AUTHENTICATION PROCESS
S322
NOTIFY OF AUTHENTICATION
S312
TRANSMIT CONTENT INFORMATION
S323
TRANSMIT CONTENT INFORMATION VIA NETWORK
S331
TRANSMIT CONTENT DATA VIA NETWORK BASED ON CONTENT INFORMATION
S341
RECEIVE DATA OF CONTENT
S342
OUTPUT DATA
END
END
END
END

METHOD AND SYSTEM FOR PROCESSING INFORMATION

CROSS REFERENCES TO RELATED APPLICATIONS

The present invention contains subject matter related to Japanese Patent Application JP 2005-167234 filed in the Japanese Patent Office on Jun. 7, 2005, the entire contents of which are incorporated herein by reference.

BACKGROUND OF THE INVENTION

1. Field of the Invention

The present invention relates to an information processing system and an information processing method. More specifically, the present invention relates to an information processing method and an information processing system, which uses a plurality of directional antennas arranged in a space to form a communication coverage area, and provides services of different levels depending on the locations of users within the space.

2. Description of the Related Art

Radio communications not using cables are substantially different in directivity depending on characteristics of radio communications techniques, and setting and configuration of communication apparatuses. Some radio communications provide sharp directivity, some provide modest directivity, and the other provide no directivity at all.

Available as sharp directivity communication techniques are optical communication techniques such as infrared communications, and radio communications based on directional antennas and millimeter wave, each offering sharp directivity.

When communication techniques providing sharp directivity are used, a communication coverage area extends in one direction as shown in FIG. **1**.

As shown in FIG. **1**, a communication apparatus **1** works based on communication techniques providing sharp directivity. With its sharp directivity, the communication apparatus **1** provides a communication coverage area **1**A extending in one direction only. A mobile terminal **2-1** present within the communication coverage area **1**A of the communication apparatus **1** can communicate with the communication apparatus **1**. A mobile terminal **2-2** outside the communication coverage area **1**A of the communication apparatus **1** is unable to communicate with the communication apparatus **1**.

Most of directivity communication techniques are strongly dependent on distance. The farther the radio apparatuses are spaced apart, the worse the quality of communications becomes.

If a plurality of apparatuses performing directivity communications are present within a single space, several apparatuses can communicate with each other in one area while none of the apparatuses can communicate with each other in the other area. Depending on the location within the space, the number of apparatuses communicable with each other and communication quality becomes different.

Japanese Unexamined Patent Application Publication No. 2002-16968 discloses one technique in which an apparatus having two directional antennas is arranged within a single space, and a mobile terminal present within a communication coverage area of the two directional antennas is identified so that a service is provided to the identified mobile terminal only.

SUMMARY OF THE INVENTION

With an apparatus permitting a plurality of directivity communications being arranged within a single space, particular areas different in the number of terminals communicable within the space and in communication quality are formed. Known systems providing service taking advantage of such a particular area are not many. One system disclosed in Japanese Unexamined Patent Application Publication No. 2002-16968 uses a particular radio communication technique.

A number of radio communication techniques are available. There is a need for providing a variety of services using a particular area formed with an apparatus permitting a plurality of directivity communications arranged in a single space without being limited to any radio communication techniques.

It is desirable to provide easily services of different levels depending on the location within the space with no limitation to any particular technique.

In an information processing system of one embodiment of the present invention, an information providing apparatus includes a plurality of directional antennas arranged in a predetermined space and forming at least one particular area in which communication coverage areas of the directional antennas overlap each other, and a plurality of data transmitting units for transmitting predetermined data to the mobile terminal in the particular area using the directional antennas thereof. A mobile terminal includes a data receiving unit for receiving in the particular area the predetermined data that the data transmitting unit has transmitted via the directional antenna having the particular area as the communication coverage area, and a data processing unit for processing the predetermined data received by the data receiving unit.

The predetermined data contains authentication information required when the information providing apparatus performs authentication. The data processing unit obtains the authentication information using a plurality of units of predetermined data received by the data receiving unit. The mobile terminal further includes an authentication information transmitting unit for transmitting to the information providing apparatus the authentication information obtained by the data processing unit.

The information providing apparatus may further includes an authentication information receiving unit for receiving via the directional antenna the authentication information transmitted by the authentication information transmitting unit, and an authentication unit for authenticating the mobile terminal based on the authentication information received by the authentication information receiving unit.

The predetermined data forms a content. The data processing unit generates an output signal formed of the data of the content in response to the content received by the data receiving unit, and the mobile terminal may further include an output control unit for outputting to a user the output signal generated by the data processing unit.

An information processing method of one embodiment of the present invention includes a data transmitting step of transmitting predetermined data to the mobile terminal present in a particular area using a plurality of directional antennas arranged in a predetermined space and forming the particular area in which communication coverage areas of the directional antennas overlap each other, a data receiving step of receiving in the particular area the predetermined data

transmitted in the data transmitting step via the directional antenna having the particular area as the communication coverage area, and a processing step of processing the predetermined data received in the data receiving step.

The information providing apparatus transmits the predetermined data to the mobile terminal in the particular area using the plurality of directional antennas arranged in the predetermined space and forming the particular area in which communication coverage areas of the directional antennas overlap each other. The mobile terminal receives in the particular area the predetermined data transmitted via the directional antenna having the particular area as the communication coverage area, and processes the received predetermined data.

In accordance with embodiments of the present invention, a variety of services are provided depending on the location within the space.

BRIEF DESCRIPTION OF THE DRAWINGS

FIG. **1** illustrates radio communication using a sharp directivity pattern;

FIG. **2** illustrates the concept of a communication coverage area used in one embodiment of the present invention;

FIG. **3** illustrates the concept of the communication coverage area used in one embodiment of the present invention;

FIG. **4** illustrates one configuration of a service providing system of one embodiment of the present invention;

FIG. **5** is a block diagram of a communication apparatus of FIG. **4**;

FIG. **6** is a block diagram of a mobile terminal of FIG. **4**;

FIG. **7** is a functional block diagram of the mobile terminal of FIG. **6**;

FIG. **8** illustrates services provided by the service providing system of FIG. **4**;

FIG. **9** is a flowchart illustrating one process of the service providing system of FIG. **4**;

FIG. **10** is a flowchart illustrating another process of the service providing system of FIG. **4**;

FIG. **11** illustrates another configuration of the service providing system in accordance with one embodiment of the present invention;

FIG. **12** is a block diagram illustrating a mobile terminal of FIG. **11**;

FIG. **13** illustrates services provided by the service providing system of FIG. **11**;

FIG. **14** is a flowchart of one process of the service providing system of FIG. **11**;

FIG. **15** illustrates yet another configuration of the service providing system of FIG. **4**;

FIG. **16** is a functional block diagram of a mobile terminal of FIG. **15**;

FIG. **17** illustrates services provided by the service providing system of FIG. **15**;

FIG. **18** illustrates services provided by the service providing system of FIG. **15**;

FIG. **19** is a flowchart illustrating one process of the service providing system of FIG. **15**;

FIG. **20** illustrates a further configuration of the service providing system of FIG. **15**;

FIG. **21** is a block diagram of a server of FIG. **20**;

FIG. **22** illustrates services provided by the service providing system of FIG. **20**;

FIG. **23** illustrates services provided by the service providing system of FIG. **20**; and

FIG. **24** is a flowchart illustrating the process of the service providing system of FIG. **20**.

DESCRIPTION OF THE PREFERRED EMBODIMENTS

Before describing an embodiment of the present invention, the correspondence between the features of the claims and the specific elements disclosed in an embodiment of the present invention is discussed below. This description is intended to assure that embodiments supporting the claimed invention are described in this specification. Thus, even if an element in the following embodiments is not described as relating to a certain feature of the present invention, that does not necessarily mean that the element does not relate to that feature of the claims. Conversely, even if an element is described herein as relating to a certain feature of the claims, that does not necessarily mean that the element does not relate to other features of the claims.

Furthermore, this description should not be construed as restricting that all the aspects of the invention disclosed in the embodiments are described in the claims. That is, the description does not deny the existence of aspects of the present invention that are described in the embodiments but not claimed in the invention of this application, i.e., the existence of aspects of the present invention that in future may be claimed by a divisional application, or that may be additionally claimed through amendments.

In an information processing system (for example, a service providing system **21** of FIG. **4**) of one embodiment of the present invention, an information providing apparatus (for example, a service providing apparatus composed of a communication apparatus **31-1** through a communication apparatus **31-3** connected to a network **33** of FIG. **4**) includes a plurality of directional antennas (for example, antennas **41-1** through **42-2** of FIG. **4**) arranged in predetermined space and forming at least one particular area in which communication coverage areas of the directional antennas overlap each other, and a plurality of data transmitting units (for example, a radio communication unit **58** of each of communication apparatuses **31-1** and **31-2** of FIG. **4**) for transmitting predetermined data to the mobile terminal in the particular area using the directional antennas thereof. A mobile terminal (for example, a mobile terminal **32** of FIG. **4**) includes a data receiving unit (for example, a radio communication unit **108** of FIG. **6**) for receiving in the particular area the predetermined data that the data transmitting unit has transmitted via the directional antenna having the particular area as the communication coverage area, and a data processing unit (for example, a data processor **132** of FIG. **7**) for processing the predetermined data received by the data receiving unit.

The predetermined data contains authentication information required when the information providing apparatus performs authentication. The data processing unit obtains the authentication information using a plurality of units of predetermined data received by the data receiving unit. The mobile terminal further includes an authentication information transmitting unit (for example, an authentication data transmitter **133** of FIG. **7**) for transmitting to the information providing apparatus the authentication information obtained by the data processing unit.

The information providing apparatus further includes an authentication information receiving unit (for example, a radio communication unit **58** of FIG. **5** in the communication apparatus **31-3** of FIG. **4**) for receiving via the directional antenna the authentication information transmitted by the authentication information transmitting unit, and an authen-

tication unit (for example, a CPU **51** of FIG. **5** in the communication apparatus **31-3** of FIG. **4**) for authenticating the mobile terminal based on the authentication information received by the authentication information receiving unit.

In the information processing system (for example, a service providing system **201** of FIG. **11**), the predetermined data forms a content. The data processing unit (for example, a data generator **232** of FIG. **12**) generates an output signal formed of the data of the content in response to the content received by the data receiving unit, and the mobile terminal further include an output control unit (for example, a data output controller **233** of FIG. **12**) for outputting to a user the output signal generated by the data processing unit.

An information processing method of one embodiment of the present invention includes a data transmitting step (for example, step S**22** of FIG. **9**) of transmitting predetermined data to the mobile terminal present in a particular area using a plurality of directional antennas arranged in a predetermined space and forming the particular area in which communication coverage areas of the directional antennas overlap each other, a data receiving step (for example, step S**12** of FIG. **9**) of receiving in the particular area the predetermined data-transmitted in the data transmitting step via the directional antenna having the particular area as the communication coverage area, and a processing step (for example, step S**13** of FIG. **9**) of processing the predetermined data received in the data receiving step.

The embodiments of the present invention are described below with reference to the drawings.

The concept of a communication area used in a service providing system related to one embodiment of the present invention is described below with reference to FIGS. **2** and **3**.

Referring to FIG. **2**, each of communication apparatuses **11-1** and **11-2** is designed using radio communication techniques based on a relatively sharp directivity pattern (having half-power angle of 30 degrees), and arranged in predetermined space.

Available as sharp directivity communication techniques are optical communication techniques such as infrared communications, and radio communications based on directional antennas and millimeter wave, each offering sharp directivity.

The communication apparatus **11-1** with the directivity thereof has a communication coverage area **11**A looking upward and transmits data to and receive data from a device present within the communication coverage area **11**A. The communication apparatus **11-2** with the directivity thereof has a communication coverage area **11**B looking leftward and transmits data to and receive data from a device present within the communication coverage area **11**B.

Since the communication apparatus **11-1** and the communication apparatus **11-2** are arranged within the predetermined space in a positional relationship of FIG. **2**, a communication coverage area **11**AB where the communication coverage area **11**A overlaps the communication coverage area **11**B is formed.

More specifically, the space of FIG. **2** contains the communication coverage area **11**A where the communication apparatus **11-1** can transmit and receive data, the communication coverage area **11**B where the communication apparatus **11-2** can transmit and receive data, the communication coverage area **11**AB where both the communication apparatus **11-1** and the communication apparatus **11-2** can transmit and receive data, and an area where neither the communication apparatus **11-1** nor communication apparatus **11-2** can communicate.

Referring to FIG. **3**, communication apparatuses **12-1** through **12-3** are designed based on radio communication techniques providing a relatively sharp directivity, and arranged within a predetermined space as the communication apparatuses **11-1** and **11-2** are designed and arranged.

The communication apparatus **12-2** with the directivity pattern thereof has a communication coverage area **12**A looking upward and can transmit data to and receive data from a device present within the communication coverage area **12**A. The communication apparatus **12-1** with the directivity pattern thereof has a communication coverage area **12**B looking upward, and can transmit data to and receive data from a device present within the communication coverage area **12**B. The communication apparatus **12-3** with the directivity pattern thereof has a communication coverage area **12**C looking upward, and can transmit data to and receive data from a device present within the communication coverage area **12**C.

The communication apparatuses **12-1** through **12-3** are arranged within a predetermined space in a positional relationship of FIG. **3**. A communication coverage area **12**AB where the communication coverage area **12**A and the communication coverage area **12**B overlap each other is formed. A communication coverage area **12**BC where the communication coverage area **12**B and the communication coverage area **12**C overlap each other is formed. A communication coverage area **12**ABC where the communication coverage area **12**A, the communication coverage area **12**B, and the communication coverage area **12**C overlap each other is formed.

More specifically, the space of FIG. **3** contains the communication coverage area **12**A where the communication apparatus **12-1** can transmit and receive data, the communication coverage area **12**B where the communication apparatus **12-2** can transmit and receive data, the communication coverage area **12**C where the communication apparatus **12-3** can transmit and receive data, the communication coverage area **12**AB where both the communication coverage area **12**A and the communication coverage area **12**B can transmit and receive data, the communication coverage area **12**BC where both the communication apparatus **12-2** and the communication apparatus **12-3** can transmit and receive data, the communication coverage area **12**ABC where the communication apparatuses **12-1** through **12-3** can transmit and receive data, and an area where none of the communication apparatuses **12-1** through **12-3** can transmit and receive data.

The number of communication apparatuses is two in FIG. **2** and three in FIG. **3**. The number of communication apparatuses is not limited to two or three. Four or more communication apparatuses may also be used.

If a plurality of apparatuses using radio communication techniques having directivity are arranged within a single space, an area where apparatuses can communicate with each other and an area where none of the apparatuses can communication with each other depending on the location of each apparatus are formed. The number of apparatuses communicable and communication quality become different depending on the location of each apparatus within the space.

Using the area thus formed, a user (a mobile terminal of the user) present within the space is provided with services of different levels dependent on the location of the user.

More specifically, the service providing system of one embodiment of the present invention uses a plurality of communication techniques providing a relatively sharp directivity, thereby forming a particular area where a directivity spotlight impinges (namely, where the number of communicable apparatuses and communication quality are different). Making use of the formed area, the service providing system

provides a user (a mobile terminal of the user) present within the space with services of different levels depending on the property of the area.

The method of providing service in this way is defined as spotlight networking. The service providing system using the spotlight networking is described below in more detail.

A service providing system **21** of one embodiment of the present invention is described below with reference to FIG. **4**.

In the service providing system **21**, communication apparatuses **31-1** through **31-3** include directional antennas **41-1** through **41-3**, respectively. Using the directional antennas **41-1** through **41-3**, the communication apparatuses **31-1** through **31-3** radio communicate with a mobile terminal **32** present in communication coverage areas **41**A through **41**C of the directional antennas **41-1** through **41-3** in accordance with IEEE (the Institute of Electrical and Electronics Engineers) 802.11b standard.

The communication apparatuses **31-1** through **31-3** are connected to a network **33** using communications other than the radio communications based on the directional antennas **41-1** through **41-3**, and exchange predetermined data with the network **33**.

The network **33** may be a wired network or a wireless network. Communication security of the communication apparatuses **31-1** through **31-3** is assured using encryption technique.

The communication apparatuses **31-1** and **31-2** are arranged within a predetermined space to form a communication coverage area **41**AB where the communication coverage area **41**A of the directional antenna **41-1** and the communication coverage area **41**B of the directional antenna **41-2** overlap each other. Using the directional antennas **41-1** and **41-2**, the communication apparatuses **31-1** and **31-2** transmit data serving as authentication information which is required by a mobile terminal **32** of a user who may wish to receive service from the service providing system **21**.

The data (including data from the communication apparatus **31-1** and data from the communication apparatus **31-2**) is received within a predetermined period of time and serve as the authentication information only when these two units of data are received together.

More specifically, the communication apparatus **31-1** encrypts the authentication information, and transmits the encrypted data. The communication apparatus **31-2** transmits encryption key data required by the communication apparatus **31-1** for decryption. The encryption key data is shared by the communication apparatuses **31-1** and **31-2**, and updated every predetermined period of time. The updated encryption key data is transmitted from one to the other via the network **33**. Only when the two units of data are received within a predetermined period of time, the encrypted authentication information can be decrypted.

For example, the communication apparatus **31-1** segments the authentication information into a plurality of blocks, and transmits a portion of the blocks, and the communication apparatus **31-2** transmits the rest of the blocks other than the portion transmitted by the communication apparatus **31-1**. The segmentation of the authentication information is performed by one of the communication apparatuses **31-1** and **31-2** every predetermined period of time, and the segmented authentication information is transmitted from the one to the other via the network **33**. Only when the two units of data are received within a predetermined period of time, all blocks forming the authentication information can be received.

If the mobile terminal **32** fails to receive in the communication coverage area **41**AB the two units of data from the communication apparatuses **31-1** and **31-2** within a predetermined period of time, the authentication information cannot be received.

The predetermined period of time may be set to the shortest data reception time of the two units of data in the communication coverage area **41**AB or may be set to time longer than the shortest time.

The communication apparatus **31-3** is arranged in a space different from the space where the communication apparatuses **31-1** and **31-2** are arranged. Using the directional antenna **41-3**, the communication apparatus **31-3** authenticates the mobile terminal **32** of a user who may wish to receive service of the service providing system **21**. The communication apparatus **31-3** starts providing the mobile terminal **32** with the service of the service providing system **21** when the mobile terminal **32** is successfully authenticated. The space of the communication apparatuses **31-1** and **31-2** and the space of the communication apparatus **31-3** may not be separate. The communication apparatuses **31-1** through **31-3** may be arranged within the same space.

The services provided by the service providing system **21** includes transmission of music or video data, or opening of a door.

The authentication information is updated in one of the communication apparatuses **31-1** through **31-3** every expiration time set therewithin, and then transmitted to the other apparatuses via the network **33**. If the authentication information is not updated by the communication apparatus **31-3** within the expiration time from the reception of the authentication information (such as 10 to 30 seconds), the authentication information is invalidated.

The mobile terminal **32** may be one of a cellular phone, a portable device (PD), a personal digital assistant (PDA), and a small personal computer.

The mobile terminal **32** having a communication antenna **42** is carried by a user, and enters a predetermined area in a space. The mobile terminal **32** in the predetermined area as a communication coverage area then radio communicates with the communication apparatuses **31-1** through **31-3** in accordance with IEEE 802.11b standard. The directivity of the communication antenna **42** is not limited to any specific range. However, the communication antenna **42** needs to have a communication coverage area that permits the mobile terminal **32** to exchange data with each of the directional antennas **41-1** through **41-3** within the communication coverage areas thereof.

The mobile terminal **32** carried by the user into the communication coverage area **41**AB exchanges data with each of the communication apparatuses **31-1** and **31-2** having the communication coverage area **41**AB thereof, and processes the data for decryption or synthesis to obtain the authentication information.

The mobile terminal **32** carried by the user into the communication coverage area **41**C transmits the authentication information to the communication apparatus **31-3** having the communication coverage area **41**C, and is authenticated by the communication apparatus **31-3**. The user carrying the mobile terminal **32** thus receives the service provided by the service providing system **21**.

To receive the service in the service providing system **21** of FIG. **4**, the mobile terminal carried by the user needs to be present for a constant duration of time within a predetermined area (i.e., the communication coverage area **41**AB).

The user can thus enjoy the corresponding service by simply placing the mobile terminal **32** within the predetermined area or by simply align the mobile terminal **32**. The user can receive ambient service in the service providing system **21**.

In the above discussion, the communication apparatuses **31-1** through **31-3** exchange data with each other via the network **33** so that the authentication process is performed in the service providing system **21**. The communication apparatuses **31-1** through **31-3** connected to the network **33** are considered as a single service providing apparatus, and a server may be connected to the network **33** so that the server controls the communication apparatuses **31-1** through **31-3** as the service providing apparatus.

If there is no need for distinguishing between the communication apparatuses **31-1** through **31-3** and between the directional antennas **41-1** through **41-3**, each of the communication apparatuses **31-1** through **31-3** is simply referred to as a communication apparatus **31** and each of the directional antennas **41-1** through **41-3** is simply referred to as a directional antenna **41**.

FIG. **5** is a block diagram of the communication apparatus **31**.

A central processing unit (CPU) **51** performs a variety of processes under the control of a program stored on a read-only memory (ROM) **53** or a program loaded to a random-access memory (RAM) **54** from a storage unit **57**. The RAM **54** also stores data required by the CPU **51** in the execution of the variety of processes.

The CPU **51**, the ROM **53**, and the RAM **54** are interconnected to each other via a bus **52**. Also connected to the bus **52** are an input unit **55** including a keyboard and a mouse, a communication unit **56** including a modem, a terminal adaptor, and a network interface, a storage unit **57** including a hard disk, and a radio communication unit **58** having the directional antenna **41**.

The communication unit **56** under the control of the CPU **51** exchanges information with another apparatus connected to the network **33**. The radio communication unit **58** under the control of the CPU **51** exchanges information via the directional antenna **41** with another apparatus (such as the mobile terminal **32**) present in the communication coverage area of the directional antenna **41**.

The bus **52** also connects to a drive **59** as necessary. The drive **59** is loaded with one of a magnetic disk **81**, an optical disk **82**, a magneto-optical disk **83**, and a semiconductor memory **84** as necessary. A computer program read from the storage medium is installed onto the storage unit **57** as necessary.

FIG. **6** is a block diagram illustrating the mobile terminal **32**.

A CPU **101** performs a variety of processes under the control of a program stored on a ROM **103** or under the control of a program loaded from a storage unit **106** to a RAM **104**. The RAM **104** also stores data required by the CPU **101** in the execution of the variety of processes as necessary.

The CPU **101**, the ROM **103** and the RAM **104** are interconnected to each other via a bus **102**. Also connected to the bus **102** are an operation unit **105**, the storage unit **106** including a hard disk, a input/output (I/O) port **107** able to receive a storage medium such as a memory card, a radio communication unit **108**, a sensor **109**, a video signal processor **110**, and an audio signal processor **111**.

The operation unit **105** may be composed of a variety of buttons and a touchpanel, and supplies the CPU **101** with a signal responsive to a user operation.

The radio communication unit **108** under the control of the CPU **101** exchanges information via a communication antenna **42** with another apparatus (such as the communication apparatus **31**) present in the communication coverage area of the communication antenna **42**.

The sensor **109** is composed of one of a gyro sensor and a bearing sensor. When the user performs one action (such as rotation) on the mobile terminal **32**, the mobile terminal **32** detects the action, and supplies the detection information to the CPU **101**.

The video signal processor **110** under the control of the CPU **101** displays on an LCD **112** an image corresponding to input video data (a still image or a moving image). The audio signal processor **111** under the control of the CPU **101** outputs a sound from a loudspeaker **113** in response to input audio data.

FIG. **7** is a functional block diagram illustrating the mobile terminal **32** in the service providing system **21** of FIG. **4**. The functional blocks of FIG. **7** are executed when the CPU **101** performs a predetermined program.

Via the radio communication unit **108**, an authentication processing controller **131** requests the communication apparatus **31** to transfer the authentication information. The authentication processing controller **131** controls a data processor **132** to process the data received via the radio communication unit **108**. The authentication processing controller **131** also controls an authentication data transmitter **133** to transmit via the radio communication unit **108** the authentication information obtained from the data processor **132**.

The data processor **132** under the control of the authentication processing controller **131** performs a process to obtain the authentication information using data received from the radio communication unit **108**.

More specifically, when encrypted authentication data and encryption key data are input via the radio communication unit **108**, the data processor **132** decrypts the encrypted authentication data using the encryption key data, and outputs the resulting authentication information to the authentication data transmitter **133**. When the data segmented in a plurality of blocks is input via the radio communication unit **108**, the data processor **132** synthesizes the plurality of blocks, and outputs the resulting authentication information to the authentication data transmitter **133**.

The authentication data transmitter **133** under the control of the authentication processing controller **131** transmits via the radio communication unit **108** and the communication antenna **42** the authentication information input from the data processor **132**.

The process of the service providing system **21** of FIG. **4** is described below with reference FIG. **8** and a flowchart of FIG. **9**.

FIG. **8** shows a service in which the user carrying the mobile terminal **32** authenticated by the service providing system **21** is permitted to enter a building.

In the space where the communication apparatuses **31-1** and **31-2** are arranged, a communication coverage area **41**A of a directional antenna **41-1** of a communication apparatus **31-1** and a communication coverage area **41**B of a directional antenna **41-2** of the communication apparatus **31-2** overlaps in an area (namely, a communication coverage area **41**AB). To receive the service, the user continuously places the mobile terminal **32** in the communication coverage area **41**AB for a predetermined period of time.

The communication coverage area **41**AB is invisible to the user except visible light communications. For example, a table may be placed within the communication coverage area **41**AB to show the approximate position of the communication coverage area **41**AB.

The radio communication units **58** of the communication apparatuses **31-1** and **31-2** transmit calling radio wave to the communication coverage areas **41**A and **41**B from the directional antennas **41-1** and **41-2**, respectively.

The radio communication unit **108** of the mobile terminal **32** present in the communication coverage area **41**AB receives the calling radio waves from the communication apparatuses **31-1** and **31-2** via the communication antenna **42**, and then notifies the authentication processing controller **131** of the reception of the radio wave. In step S**11**, the authentication processing controller **131** controls the radio communication unit **108**, thereby transmitting a request for the authentication information to the communication apparatuses **31-1** and **31-2** via the communication antenna **42**.

In step S**21**, the radio communication unit **58** of the communication apparatus **31-1** receives the request for the authentication information from the mobile terminal **32**, and supplies the CPU **51** with the request. Processing proceeds to step S**22**.

In response to the request from the mobile terminal **32**, the CPU **51** of the communication apparatus **31-1** encrypts the authentication information using the encryption key data shared by the communication apparatus **31-2**, and supplies the encrypted authentication data to the radio communication unit **58**. In step S**22**, the radio communication unit **58** transmits the encrypted authentication data to the mobile terminal **32** present within the communication coverage area **41**A (containing the communication coverage area **41**AB) via the directional antenna **41-1**.

In step S**31**, the radio communication unit **58** in the communication apparatus **31-2** receives the request for the authentication information from the mobile terminal **32** via the directional antenna **41-2**, and supplies the request to the CPU **51**. Processing proceeds to step S**32**.

The CPU **51** in the communication apparatus **31-2** supplies the encryption key data shared by the communication apparatus **31-1** in response to the request from the mobile terminal **32**. In step S**32**, the radio communication unit **58** transmits via the directional antenna **41-2** the encryption key data to the mobile terminal **32** present within the communication coverage area **41**B (containing the communication coverage area **41**AB).

In step S**12**, the radio communication unit **108** in the mobile terminal **32** receives via the communication antenna **42** the encrypted authentication data from the communication apparatus **31-1** and the encryption key data from the communication apparatus **31-2**. The radio communication unit **108** in the mobile terminal **32** then supplies the received data to the authentication processing controller **131** and proceeds to step S**13**.

In step S**13**, the authentication processing controller **131** controls the data processor **132**, thereby causing the data processor **132** to decrypt the authentication data using the encryption key data and to acquire the authentication information. The data processor **132** supplies the acquired authentication data to the authentication data transmitter **133** and then proceeds to step S**14**.

The above-mentioned acquisition process of acquiring the authentication information is performed by the mobile terminal **32**, and the communication apparatuses **31-1** and **31-2** within a predetermined period of time. When the predetermined period of time has elapsed, the user enters the space where the communication apparatus **31-3** is arranged, and places the mobile terminal **32** in the communication coverage area **41**C of the directional antenna **41-3** of the communication apparatus **31-3** for a constant duration of time.

To alert the user to the acquisition of the authentication information, the mobile terminal **32** may cause the LCD **112** or an light-emitting diode (LED) (not shown) to display the elapse of the predetermined period of time or the completion of the acquisition of the authentication information or the loudspeaker **113** to output a sound.

The radio communication unit **58** in the communication apparatus **31-3** transmits a calling radio wave requesting the authentication information to the communication coverage area **41**C from the directional antenna **41**.

The radio communication unit **108** in the mobile terminal **32** present within the communication coverage area **41**C receives the calling radio wave from the communication apparatus **31-3** via the communication antenna **42**. The radio communication unit **108** then notifies the authentication processing controller **131** of the reception of the calling radio wave. In step S**14**, the authentication processing controller **131** controls the authentication data transmitter **133**, thereby causing the authentication data transmitter **133** to transmit the authentication information via the radio communication unit **108** and the communication antenna **42**.

The radio communication unit **58** in the communication apparatus **31-3** receives the authentication information from the mobile terminal **32** via the directional antenna **41-3**, and then supplies the received authentication information to the CPU **51**. The authentication information is updated at every expiration time in the service providing system **21** (among the communication apparatuses **31-1** through **31-3**). In step S**41**, the CPU **51** determines whether the authentication information is currently correct authentication information.

If the CPU **51** in the communication apparatus **31-3** determines in step S**41** that the authentication information is correct one, processing proceeds to step S**42**. The use is thus provided with the service of the service providing system **21**. More specifically, the communication apparatus **31-3** opens a key of a door **151**, and permits the user having the mobile terminal **32** to enter a room with the door **151** opened.

If the expiration time of the authentication information has passed (i.e., if time longer than the expiration time has elapsed since the transmission of the authentication information from the communication apparatuses **31-1** and **31-2**), the CPU **51** in the communication apparatus **31-3** determines in step S**41** that the authentication information from the mobile terminal **32** is not correct one, and step S**42** is skipped. The user is not provided with the service of the service providing system **21**.

In the above discussion, the communication apparatuses **31-1** through **31-3** first transmit the calling radio wave. Alternatively, the mobile terminal **32** may transmit first. In other words, a communication start trigger may be transmitted from any side.

The authentication information required to receive the service of the service providing system **21** may be acquired within only the communication coverage area **41**AB of the directional antennas **41-1** and **41-2**.

By simply placing the mobile terminal **32** within the communication coverage area **41**AB of the directional antennas **41-1** and **41-2** (for a predetermined period of time), the user can obtain the authentication information. Thereafter, by simply placing the mobile terminal **32** in the communication coverage area **41**C of the directional antenna **41-3**, the user can receive the service of the service providing system **21**.

When the authentication information is requested within the communication coverage area **41**AB of the directional antennas **41-1** and **41-2**, the mobile terminal **32** may transmit detection information from the sensor **109** to the communication apparatuses **31-1** and **31-2**. In this way, a further special service may be provided in response to the detection information in the service providing system **21**.

Another process of the service providing system **21** of FIG. **4** is described below with reference to a flowchart of FIG. **10**.

Referring to FIG. **10**, steps identical to those discussed with reference to FIG. **9** are omitted as appropriate.

As shown in FIG. **10**, the detection information from the sensor **109** is transmitted. The user who is authenticated in response to the detection information in the service providing system **21** is provided with a music data delivery service.

To receive such a service, the user places the mobile terminal **32**, within the space of the communication apparatuses **31-1** and **31-2** for a predetermined period of time, an area (i.e., the communication coverage area **41**AB) where the communication coverage area **41**A of the directional antenna **41-1** of the communication apparatus **31-1** and the communication coverage area **41**B of the directional antenna **41-2** of the communication apparatus **31-2** overlap each other.

The user performs on the mobile terminal **32** a predetermined action preset in the service providing system **21**. For example, the user turns the mobile terminal **32** three times clockwise, and then five times counterclockwise. The sensor **109** detects the action performed on the mobile terminal **32**, and supplies the CPU **51** with information detected in response.

The radio communication units **58** of the communication apparatuses **31-1** and **31-2** transmit calling radio waves to the communication coverage area **41**A and the communication coverage area **41**B via the directional antennas **41-1** and **41-2**, respectively.

The radio communication unit **108** in the mobile terminal **32** present within the communication coverage area **41**AB receives radio waves from the communication apparatuses **31-1** and **31-2**, and notifies the authentication processing controller **131** of the reception of the radio waves. In step S**51**, the authentication processing controller **131** controls the radio communication unit **108**, thereby causing the radio communication unit **108** to transmit the detection information from the sensor **109** to the communication apparatuses **31-1** and **31-2** via the communication antenna **42** and to request the authentication information.

In step S**61**, the radio communication unit **58** in the communication apparatus **31-1** receives the request for the authentication information and the detection information of the sensor **109** from the mobile terminal **32** via the directional antenna **41-1**, and supplies the received signals to the CPU **51**. Processing proceeds to step S**62**.

The service to be provided in response to the predetermined action is set up beforehand in the service providing system **21**. To receive the service, the authentication information preset for the predetermined action is required. In this case, the authentication information is segmented into a plurality of blocks between the communication apparatuses **31-1** and **31-2**, and blocks to be transmitted by respective communication apparatuses **31-1** and **31-2** are preset.

In response to the request from the mobile terminal **32**, the CPU **51** in the communication apparatus **31-1** supplies the radio communication unit **58** with a portion of the authentication information responsive to the detection information (responsive to the predetermined action). In step S**62**, the radio communication unit **58** transmits the portion of the authentication information responsive to the detection information of the sensor **109** to the mobile terminal **32** present within the communication coverage area **41**A (containing the communication coverage area **41**AB) via the directional antenna **41-1**.

In step S**71**, the radio communication unit **58** in the communication apparatus **31-2** receives the request for the authentication information and the detection information of the sensor **109** from the mobile terminal **32** via the directional antenna **41-2** and supplies the received information to the CPU **51**. Processing proceeds to step S**72**.

In response to the request from the mobile terminal **32**, the CPU **51** in the communication apparatus **31-2** supplies the radio communication unit **58** with a portion of the authentication information responsive to the detection information (the remaining portion of the authentication information, namely the portion not transmitted by the communication apparatus **31-1**). In step S**72**, the radio communication unit **58** transmits to the mobile terminal **32** present within the communication coverage area **41**B (containing the communication coverage area **41**AB) the portion of the authentication information responsive to the detection information of the sensor **109** via the directional antenna **41-2**.

In step S**52**, the radio communication unit **108** in the mobile terminal **32** receives via the communication antenna **42** the one portion of the authentication information from the communication apparatus **31-1** and the other portion of the authentication information from the communication apparatus **31-2**, and supplies the authentication processing controller **131** with the authentication information. Processing proceeds to step S**53**.

In step S**53**, the authentication processing controller **131** controls the data processor **132**, thereby causing the data processor **132** to synthesize the two portions into the authentication information, and to acquire the authentication information. The data processor **132** supplies the authentication data transmitter **133** with the acquired authentication information. Processing proceeds to step S**54**.

The above-mentioned acquisition process of the authentication information is performed by the mobile terminal **32**, and the communication apparatuses **31-1** and **31-2** within a predetermined period of time. When the predetermined period of time has elapsed, the user enters the space where the communication apparatus **31-3** is arranged, and places the mobile terminal **32** in the communication coverage area **41**C of the directional antenna **41-3** of the communication apparatus **31-3** for a constant duration of time.

The radio communication unit **58** in the communication apparatus **31-3** transmits calling radio wave requesting the authentication information to the communication coverage area **41**C from the directional antenna **41**.

The radio communication unit **108** in the mobile terminal **32** receives the calling radio wave from the communication apparatus **31-3** via the communication antenna **42**, and notifies the authentication processing controller **131** of the reception of the calling radio wave. In step S**54**, the authentication processing controller **131** controls the authentication data transmitter **133**, thereby causing the authentication data transmitter **133** to transmit the authentication information via the radio communication unit **108** and the communication antenna **42**.

The radio communication unit **58** in the communication apparatus **31-3** receives the authentication information from the mobile terminal **32** via the directional antenna **41-3**, and supplies the received authentication information to the CPU **51**. The CPU **51** determines in step S**81** whether the authentication information is correct one. If it is determined in step S**81** that the authentication information is correct one, processing proceeds to step S**82**. The user is thus provided with the service of the service providing system **21**. In this case, the audio data responsive to the authentication information is provided (delivered).

If the expiration time of the authentication information has passed (i.e., if time longer than the expiration time has elapsed since the transmission of the authentication information from the communication apparatuses **31-1** and **31-2**), the

CPU **51** in the communication apparatus **31-3** determines in step S**81** that the authentication information from the mobile terminal **32** is not correct one, and step S**82** is skipped. The user is not provided with the service of the service providing system **21**.

The sensor **109** in the mobile terminal **32** detects the action performed on the mobile terminal **32** within the communication coverage area **41**AB and detection information is transmitted. The authentication information responsive to the detection information is acquired. The service different dependent on the action detected within the communication coverage area **41**AB is provided.

The information for receiving different services is not limited to the information detected by the sensor **109**. The user may operate the operation unit **105** within the communication coverage area **41**AB, and enter an identifier and a password to be transmitted to the communication apparatuses **31-1** and **31-2**.

In the above discussion, the communication apparatuses **31-1** and **31-2** encrypt the authentication information and transmits the encrypted authentication information to the mobile terminal **32** or segments the authentication information into blocks and transmits the blocks to the communication apparatuses **31-1** and **31-2**. The present invention is not limited to these methods. Any other method is acceptable as long as data communication is performed with each of the communication apparatuses **31-1** and **31-2** so that the authentication information is obtained within a predetermined period of time.

In another method, a signal (beacon signal) transmitted from the communication apparatus **31** to each of the communication apparatuses **31-1** and **31-2** may be observed at regular intervals. If the beacon signals received by the communication apparatuses **31-1** and **31-2** are above a predetermined threshold, the mobile terminal **32** is determined to be within the communication coverage area **41**AB, and one of the communication apparatuses **31-1** and **31-2** then transmits the authentication information.

To use beacon signal from the mobile terminal **32**, the communication apparatuses **31-1** and **31-2** need to learn beforehand the output power of the mobile terminal **32**.

In the service providing system **21** of FIG. **4**, the two communication apparatuses **31-1** and **31-2** transmit the authentication information. The number of apparatuses is not limited to two and may be three, or more. In such a case, communication coverage areas of the plurality of communication apparatuses are used.

In the service providing system **21** of FIG. **4**, the communication apparatus **31-3** authenticates the mobile terminal **32** and permits the service to be provided to the user. When service providing is permitted, a plurality of communication apparatuses may have the right to permit the user of service in the same manner as when the authentication information is provided. In such a case as well, communication coverage areas of the plurality of communication apparatuses are used.

FIG. **11** illustrates an inventive service providing system **201**. Elements identical to those discussed with reference to FIG. **4** are designated with the same reference numerals and the discussion thereof is omitted as appropriate.

As in the communication apparatus **31** of FIG. **4**, communication apparatuses **211-1** through **211-3** are provided with directional antennas **41-1** through **41-3** in the service providing system **201**. Using the directional antennas **41-1** through **41-3**, the communication apparatuses **211-1** through **211-3** radio communicate with the mobile terminal **32** present in each of the communication coverage areas **41**A through **41**C of the directional antennas **41-1** through **41-3**.

As the communication apparatus **31** of FIG. **4**, the communication apparatuses **211-1** through **211-3** are connected to the network **33** using communications other than the radio communications using the directional antennas **41-1** through **41-3**, and exchange predetermined data.

In the service providing system **201**, contents supplied by the communication apparatuses **211-1** through **211-3** are managed by a server (not shown) connected to the network **33**. The communication apparatuses **211-1** through **211-3** connected to the network **33** may be considered as a single service providing apparatus.

The communication apparatuses **211-1** through **211-3** are arranged in a predetermined space so that the following communication coverage areas are formed: a communication coverage area **41**AB where the communication coverage area **41**A of the directional antenna **41-1** and the communication coverage area **41**B of the directional antenna **41-2** overlap each other, a communication coverage area **41**BC where the communication coverage area **41**B of the directional antenna **41-2** and the communication coverage area **41**C of the directional antenna **41-3** overlap each other, and a communication coverage area **41**ABC where the communication coverage area **41**A of the directional antenna **41-1**, the communication coverage area **41**B of the directional antenna **41-2** and the communication coverage area **41**C of the directional antenna **41-3** overlap each other. Using the directional antennas **41-1** through **41-3**, the communication apparatuses **211-1** through **211-3** deliver data of a predetermined content to the mobile terminal **32** of the user who receives the service of the service providing system **201**.

The communication apparatuses **211-1** through **211-3** deliver audio data, still-image data, and moving-image data as the data of contents at high quality and degraded quality.

The data delivered may be at one of the high quality and the degraded quality. The data delivered may not be a combination of the audio data, the still-image data, and the moving-image data or may additionally contain other types of data. The other types of data may contain content-assisting information for assisting a user in hearing and viewing delivered data, such as menu information displayed on a screen of the mobile terminal **32** and encode information for reproducing correctly the content.

If there is no need for distinguishing between the communication apparatuses **211-1** through **211-3**, each of the communication apparatuses **211-1** through **211-3** is referred to as a communication apparatus **211**. The number of communication apparatuses **211** is not limited to three. Two or more communication apparatuses **211** may be employed. The geometry of the arrangement of the communication apparatuses **211** is not limited to the one of FIG. **11**.

The communication apparatus **211** has the same structure as the communication apparatus **31** of FIGS. **4** and **5**. The communication apparatus **211** is also discussed with reference to FIG. **5**.

The mobile terminal **32** having the communication antenna **42** is carried by the user, and placed in the particular area within the space to communicate with the communication apparatus **211** in the predetermined area as the communication coverage area thereof.

The mobile terminal **32** carried by the user and placed in each communication coverage area receives data of contents transmitted by the communication apparatus **211** having the area as the communication coverage area. Depending on the number of received contents, the mobile terminal **32** generates display signals and audio signals of the data of the received contents, and outputs corresponding video on the LCD **112** and corresponding audio from the loudspeaker **113**.

For example, when the mobile terminal **32** present in one of the communication coverage areas **41**A, **41**B, and **41**C receives data of a content from a corresponding single communication apparatus **211**, the video and audio of the single content are output to the LCD **112** and the loudspeaker **113**, respectively.

When the mobile terminal **32** present within one of the communication coverage areas **41**AB and **41**BC receives data of contents from corresponding two communication apparatuses **211**, the video of the two contents and the audio of one content are output to the LCD **112** and the loudspeaker **113**, respectively.

When the mobile terminal **32** present within the communication coverage area **41**ABC receives contents from the three communication apparatuses **211**, the video of the three contents and the audio of any one of the three contents are output to the LCD **112** and the loudspeaker **113**, respectively.

The data of the contents received by the mobile terminal **32** becomes different depending on the area in the space in the service providing system **201** of FIG. **11**. More specifically, the service providing system **201** provides different services depending on the area where the mobile terminal **32** carried by the user is present.

The user can thus enjoy the service responsive to the position of the user by simply carrying the mobile terminal **32** and moving to a predetermined area. The service providing system **201** thus provides the user with ambient services.

FIG. **12** is a functional block diagram of the mobile terminal **32** in the service providing system **201** of FIG. **11**. The functional block diagram of FIG. **12** is embodied when the CPU **101** performs a predetermined program.

A data acquisition controller **231** controls a data generator **232** in response to contents (such as the number of contents, type of data forming the contents, or metadata attached to each content) received from the communication apparatus **211** via the radio communication unit **108**. The data acquisition controller **231** thus causes the data generator **232** to generate a display signal and an audio signal from the data of the received contents.

The data generator **232** under the control of the data acquisition controller **231** generates a display signal by superimposing predetermined still-image data and moving-image data of a received content, and outputs the generated display signal to a data output controller **233**. The data generator **232** under the control of the data acquisition controller **231** generates an audio signal by synthesizing predetermined audio data from the data of the received content or by simply extracting predetermined audio data, and outputs the generated audio data to the data output controller **233**.

The data output controller **233** outputs the display signal generated by the data generator **232** to the video signal processor **110**. The data output controller **233** controls the video signal processor **110** to display the corresponding image on the LCD **112**. The data output controller **233** furthermore outputs the audio signal generated by the audio signal processor **111**. The data output controller **233** controls the audio signal processor **111** to output a corresponding audio from the loudspeaker **113**.

The process of the service providing system **201** of FIG. **11** is described below with reference FIG. **13** and a flowchart of FIG. **14**.

In the service providing system **201** of FIG. **13**, the communication apparatus **211-1** delivers to the mobile terminal **32** moving-image data, still-image data, and audio data of a content, A, the communication apparatus **211-2** delivers to the mobile terminal **32** moving-image data, still-image data, and audio data of a content B, and the communication apparatus **211-3** delivers to the mobile terminal **32** moving-image data, still-image data, and audio data of a content C.

In step S**111** of FIG. **14**, the radio communication unit **58** of the communication apparatus **211-1** transmits the data of the content A (the moving-image data, the still-image data, and the audio data) to the communication coverage area **41**A (containing the communication coverage area **41**AB and the communication coverage area **41**ABC) from the directional antenna **41-1**.

In step S**121**, the radio communication unit **58** of the communication apparatus **211-2** transmits the data of the content B (the moving-image data, the still-image data, and the audio data) to the communication coverage area **41**B (containing the communication coverage area **41**AB, the communication coverage area **41**BC, and the communication coverage area **41**ABC) from the directional antenna **41-2**.

In step S**131**, the radio communication unit **58** of the communication apparatus **211-3** transmits the data of the content C (the moving-image data, the still-image data, and the audio data) to the communication coverage area **41**C (containing the communication coverage area **41**BC and the communication coverage area **41**ABC) from the directional antenna **41-3**.

To receive the service of the service providing system **201**, the user carrying the mobile terminal **32** moves to a communication coverage area where a desired content can be received from among the communication coverage areas of the communication apparatuses **211-1** through **211-3**.

In step S**141**, the radio communication unit **108** in the mobile terminal **32** staying within the communication coverage area desired by the user receives via the communication antenna **42** the data of the content transmitted from the directional antenna **41** of the communication apparatus **211** having the area as the communication coverage area thereof, and notifies the data acquisition controller **231** of the received content. Processing proceeds to step S**142**.

In step S**142**, the data acquisition controller **231** controls the data generator **232** in response to the content received by the radio communication unit **108**, thereby generating the display signal from the data of the received content. The data generator **232** generates the display signal and outputs the generated display signal to the data output controller **233**. Processing proceeds to step S**143**.

In step S**143**, the data output controller **233** outputs the display signal from the video signal processor **110**. The data output controller **233** controls the video signal processor **110**, thereby causing the LCD **112** to display the signal responsive to the display signal. In this way, any content of the communication apparatuses **211** is thus displayed on the LCD **112**.

The data acquisition controller **231** controls the data generator **232** as necessary, thereby outputting the audio signal to the loudspeaker **113** via the data output controller **233** and the audio signal processor **111**.

More specifically, as shown in FIG. **13**, the radio communication unit **108** in the mobile terminal **32** present within the communication coverage area **41**A receives the data of the content A only (the moving-image data, the still-image data, and the audio data) from the directional antenna **41-1** of the communication apparatus **211-1**.

The data acquisition controller **231** in the mobile terminal **32** determines that only the content A has been received, and controls the data generator **232**, thereby generating the display signal so that the image of the moving-image data of the content A appears large. The data acquisition controller **231** then generates the audio signal responsive to the audio data of the content A.

Under the control of the data output controller **233**, the display signal is output to the LCD **112** via the video signal processor **110**. Under the control of the data output controller **233**, the audio signal is output to the loudspeaker **113** via the audio signal processor **111**.

As shown in FIG. **13**, a screen **251** of an image responsive to the moving-image data of the content A is displayed on the LCD **112** in the mobile terminal **32** present within the communication coverage area **41**A. A sound responsive to the audio data of the content A is output from the loudspeaker **113** of the mobile terminal **32**.

For example, the radio communication unit **108** in the mobile terminal **32** present within the communication coverage area **41**A receives the data of the content A (the moving-image data, the still-image data, and the audio data) from the directional antenna **41-1** of the communication apparatus **211-1** and the data of the content B from the directional antenna **41-2** of the communication apparatus **211-2**.

The data acquisition controller **231** in the mobile terminal **32** determines that both the content A and the content B have been received. The data acquisition controller **231** then controls the data generator **232**, thereby generating the display signal with two units of the moving-image data superimposed to each other so that the image of the moving-image data of the content A and the image of the moving-image data of the content B are displayed in a juxtaposed position. The audio signal corresponding to the audio data of one of the content A and the content B is generated.

Under the control of the data output controller **233**, the display signal is output to the LCD **112** via the video signal processor **110**. Under the control of the data output controller **233**, the audio signal is output to the loudspeaker **113** via the audio signal processor **111**.

As shown in FIG. **13**, a screen **252** composed of two juxtaposed images of still-image data of the content A and the content B is displayed on the LCD **112** in the mobile terminal **32** present within the communication coverage area **41**AB. A sound responsive to the audio data of the content B is output from the loudspeaker **113** in the mobile terminal **32**.

The radio communication unit **108** in the mobile terminal **32** present within the communication coverage area **41**ABC receives the data of the content A (the moving-image data, the still-image data, and the audio data) from the directional antenna **41-1** of the communication apparatus **211-1**, the data of the content B from the directional antenna **41-2** of the communication apparatus **211-2**, and the data of the content C from the directional antenna **41-3** of the communication apparatus **211-3**.

The data acquisition controller **231** in the mobile terminal **32** determines that the content A, the content B and the content C have been received. The data acquisition controller **231** controls the data generator **232**, thereby causing the data generator **232** to generate the display signal with three units of still-image data thereof superimposed to each other so that the image of the still-image data of the content A, the image of the still-image data of the content B, and the image of the still-image data of the content C are displayed in a juxtaposed position. No audio signal is generated.

Under the control of the data output controller **233**, the display signal is output to the LCD **112** via the video signal processor **110**.

As shown in FIG. **13**, a screen **253** with three juxtaposed images of the still-image data of the content A, the content B and the content C is displayed on the LCD **112** in the mobile terminal **32** present within the communication coverage area **41**ABC. No sound is output from the loudspeaker **113** of the mobile terminal **32**.

If only a single content is received by the mobile terminal **32**, the image responsive to the moving-image data of that content is displayed while the audio data of the content is also output. The user can thus view the moving image of the content.

If only two contents are received by the mobile terminal **32**, the images responsive to the moving-image data of the contents is displayed in a size smaller than when only a single content is received. The audio data of one of the two contents is output. The user can easily view the moving image of the contents and may move to an area where a desired content only is received.

If only three contents are received by the mobile terminal **32**, the images responsive to the still-image data of the contents are displayed in a size smaller than when the two contents are received. The user may cursorily view the still images to know which contents are delivered, and may move to an area where only a desired content is received.

The display method of the images responsive to the data and output method of the sound are not limited to the above-referenced method and combinations. For example, both units of audio data may be output concurrently. The images responsive to three units of moving-image data may be displayed in a juxtaposed position. The layout of the images within the screen is not limited to the one of FIG. **13**. Data controlling the outputting may be transmitted from the communication apparatus **211** as metadata.

As described above, the user can receive services different depending on the area where the mobile terminal **32** held by the user is placed. The user can thus receive the service responsive to a position within an area by simply carrying the mobile terminal **32** and moving to the position in the desired area.

FIG. **15** illustrates a service providing system **301** of one embodiment of the present invention. The service providing system **301** of FIG. **15** is similar to the service providing system **21** of FIG. **4** and elements corresponding to elements of FIG. **4** are designated with the same reference numerals and the discussion thereof is omitted as appropriate.

As the communication apparatus **31** of FIG. **4**, the service providing system **301** includes communication apparatuses **311-1** through **311-2** provided with directional antennas **41-1** and **41-2**. Using the directional antennas **41-1** and **41-2**, the communication apparatuses **311-1** through **311-2** radio communicate with the mobile terminal **32** present within the communication coverage areas **41**A and **41**B of the directional antennas **41-1** and **41-2**.

The communication apparatuses **311-1** through **311-2** is connected to a network **312** for communications other than the radio communications using the directional antennas **41-1** and **41-2**, and exchanges predetermined data.

The network **312** is a radio LAN (Local Area Network). Alternatively, the network **312** may be a wired network. Communications between the communication apparatuses **31-1** and **31-2** are secured using encryption technique.

As shown in FIG. **15**, the network **312** also connects to mobile terminals **313-1** through **313-3**.

As the communication apparatuses **31-1** and **31-2** of FIG. **4**, the communication apparatuses **311-1** through **311-2** are arranged within a predetermined space so that the communication coverage area **41**A of the directional antenna **41-1** and the communication coverage area **41**B of the directional antenna **41-2** overlap each other. Using the directional antennas **41-1** and **41-2**, the communication apparatuses **311-1** through **311-2** transmit data serving as authentication infor-

mation required by the mobile terminal **32** of the user who may wish to receive the service of the service providing system **301**.

The communication apparatus **311-1** also performs the process of the communication apparatus **31-3** of FIG. **4**. More specifically, the communication apparatus **311-1** performs the authentication process on the mobile terminal **32** of the user who receives the service of the service providing system **301** and starts providing the service of the service providing system **301** to the mobile terminal **32**, which has been authenticated through the authentication process.

With reference to FIG. **15**, the mobile terminal **32** is connected to the network **312**. The mobile terminal **32** transmits still-image data of its own to the other mobile terminals **313-1** through **313-3** via the network **312**. The still-image data is then output from the mobile terminals **313-1** through **313-3**.

The mobile terminal **32** within the communication coverage area **41**AB exchanges data with the communication apparatuses **311-1** through **311-2** having the communication coverage area **41**AB. The mobile terminal **32** performs data processing on the obtained data, such as decryption or synthesis, thereby obtaining the authentication information. The mobile terminal **32** then transmits the obtained authentication information to the communication apparatus **311-1** to be authenticated by the communication apparatus **311-1**.

In this way, the mobile terminal **32** or the user holding the mobile terminal **32** can receive the service of the service providing system **301**.

Each of the mobile terminals **313-1** through **313-3** has the same structure as the mobile terminal **32**, and receives data of contents supplied from apparatuses (for example, the communication apparatuses **311-1** through **311-2** and the other mobile terminal **313**) connected to the network **312**, and displays an image responsive to the received image data.

The mobile terminals **313-1** through **313-3**, if permitted to be connected to the network **312** of the mobile terminal **32**, receives data from the mobile terminal **32** via the network **312**.

As the service providing system **21** of FIG. **4**, in the service providing system **301** of FIG. **15**, the mobile terminal can receive the service of being connected to the network **312** and exchanging information with apparatuses and terminals connected to the network **312** on the premise that the mobile terminal held by the user stays in a predetermined area (i.e., the communication coverage area **41**AB) for a predetermined period of time.

The communication apparatuses **311-1** through **311-2** connected to the network **312** as shown in FIG. **15** are considered as a single service providing apparatus as the mobile terminals **31-1** through **31-3** connected to the network **33** of FIG. **4**.

If there is no need for distinguishing between the communication apparatuses **311-1** through **311-2**, each of the communication apparatuses **311-1** through **311-2** is simply referred to as a communication apparatus **311**. If there is no need for distinguishing between the mobile terminals **313-1** through **313-3**, each of the mobile terminals **313-1** through **313-3** is simply referred to as a mobile terminal **313**.

The mobile terminal **313** has the same structure as the mobile terminal **32** of FIGS. **3** and **6**. The mobile terminal **313** is described below with reference to FIG. **6**. The functional block diagram of the mobile terminal **313** of FIG. **12** is performed when the CPU **101** performs a predetermined program. The functional block diagram of FIG. **12** is also applicable to the mobile terminal **313**.

FIG. **16** is a functional block diagram of the mobile terminal **32** in the service providing system **301** of FIG. **15**. The functional block diagram of FIG. **16** is performed when the CPU **101** performs a predetermined program. The functional block diagram of FIG. **16** is different from the functional block diagram of FIG. **7** in that a network **321** is added. The rest of the mobile terminal **32** is generally identical to the mobile terminal **32** of FIG. **7**.

The authentication processing controller **131** issues a request for the authentication information to the communication apparatus **311** via the radio communication unit **108** and controls the data processor **132** and the authentication data transmitter **133**. When the communication apparatus **311** notifies the mobile terminal **32** of authentication, the authentication processing controller **131** controls the content transmitter **321**, thereby transmitting via the radio communication unit **108** the data of the content currently being viewed (displayed) by the mobile terminal **32**.

The content transmitter **321** under the control of the authentication processing controller **131** transmits the data of the content currently viewed by the mobile terminal **32** to the communication apparatus **311** via the radio communication unit **108** and the communication antenna **42**.

The service provided by the service providing system **301** of FIG. **15** is described below with reference to FIGS. **17** and **18**. The directional antenna **41** of the communication apparatus **311** is shown but the communication apparatus **311** is not shown in FIGS. **17** and **18**.

Referring to FIG. **17**, the directional antennas **41-1** and **41-2** (the communication apparatuses **311-1** and **311-2**) are arranged within a room (space). Users (not shown) holding the mobile terminals **313-1** through **313-3** are sitting down on sofas around a table.

The mobile terminals **313-1** through **313-3** and the communication apparatuses **311-1** through **311-2** are connected to the network **312** of FIG. **5**. The mobile terminals **313-1** through **313-3** receive via the network **312** video data of contents stored on the storage unit **57** of the communication apparatus **311-1**, and display images of corresponding "friends" on the respective LCDs **112** of the mobile terminals **313-1** through **313-3**.

The mobile terminal **32** carried by the user displays an image of a "background" responsive to the image data of the content stored on the storage unit **106**.

The user places the mobile terminal **32** at the center area of the table centered in the room for a predetermined period of time. The center area of the table serves as an area (the communication coverage area **41**AB) where the communication coverage area **41**A of the directional antenna **41-1** of the communication apparatus **311-1** and the communication coverage area **41**B of the directional antenna **41-2** of the communication apparatus **311-2** overlap each other.

As previously discussed with reference to FIGS. **8** and **9**, when the mobile terminal **32** issues a request for authentication information, the communication apparatus **311-1** transmits encrypted authentication data to the mobile terminal **32**, and the communication apparatus **311-2** transmits encryption key data to the mobile terminal **32**.

The communication apparatus **311-1** having transmitted the encrypted authentication data requests the authentication information via the directional antenna **41-1**. The mobile terminal **32** decrypts the authentication data that has been encrypted with the encryption key data, obtains the authentication information, and transmits the obtained authentication information via the radio communication unit **108** and the communication antenna **42**.

In response to the authentication information from the mobile terminal **32**, the communication apparatus **311-1** authenticates the mobile terminal **32**, and provides the service to the mobile terminal **32**. As shown in FIG. **17**, the commu-

nication apparatus **311-1** permits the mobile terminal **32** to be connected to the network **312** by notifying the mobile terminal **32** and the apparatuses connected to the network **312** that the mobile terminal **32** has been authenticated. In this way, the mobile terminal **32** can communicate via the network **312** with the apparatuses connected to the network **312**.

More specifically, as shown in FIG. **17**, the mobile terminal **32** transmits the video data of a currently displayed content (hereinafter simply referred to as video data) via the radio communication unit **108** and the communication antenna **42** in response to the notification of authentication from the communication apparatus **311-1**. The communication apparatus **311-2** receives the video data from the mobile terminal **32** via the directional antenna **41** and the radio communication unit **58**. The communication apparatus **311-2** transmits via the communication unit **56** the received data to the mobile terminals **313-1** through **313-3** connected to the network **312**.

Upon receiving the video data from the communication apparatus **311-2** via the communication antenna **42** and the radio communication unit **108**, the mobile terminals **313-1** through **313-3** display the image responsive to the received video data on the LCDs **112** thereof.

As shown in FIG. **18**, the same "background" image as the image displayed on the LCD **112** of the mobile terminal **32** is displayed on the LCDs **112** of the mobile terminals **313-1** through **313-3**.

In the above discussion, the mobile terminal **32** transmits the video data to the mobile terminals **313-1** through **313-3** via the communication apparatus **311-2**. Alternatively, the mobile terminal **32** may transmit the video data via the communication apparatus **311-1**, and may be permitted to be connected to the network **312**. The mobile terminal **32** may thus transmit the video data directly to the mobile terminals **313-1** through **313-3** via the network **312**.

The process of the service providing system **301** of FIG. **15** is described below with reference to a flowchart of FIG. **19**.

With reference to FIG. **17**, the communication apparatuses **311-1** through **311-2** arranged in the room (space) and the mobile terminals **313-1** through **313-3** held by the users staying in the room are connected to the network **312** of FIG. **15**. The mobile terminals **313-1** through **313-3** receive via the network **312** the video data of the content stored on the storage unit **57** of the mobile terminal **313-1**, and display the image of the corresponding "friends" on the respective LCDs **112**.

The mobile terminal **32** held by the user displays the "background" image responsive to the video data of the content stored on the storage unit **106**.

The mobile terminal **32** is placed in the communication coverage area **41**AB in the center of the room where the communication apparatuses **311-1** through **311-2** are arranged. The mobile terminal **32** is continuously placed in the communication coverage area **41**AB for a predetermined period of time.

The mobile terminal **32**, and the communication apparatuses **311-1** through **311-2** perform steps S**11** through S**13**, step S**21** and step S**22**, and steps S**31** and S**32** discussed with reference to FIG. **9**.

The radio communication unit **108** in the mobile terminal **32** present in the communication coverage area **41**AB receives calling radio wave from the communication apparatuses **311-1** through **311-2** via the communication antenna **42**. The authentication processing controller **131** controls the radio communication unit **108**, thereby transmitting a request for the authentication information to the communication apparatuses **311-1** through **311-2** via the communication antenna **42**.

The radio communication unit **58** in the communication apparatus **311-1** receives the request for the authentication information from the mobile terminal **32** via the directional antenna **41-1**. In response to the request from the mobile terminal **32**, the CPU **51** encrypts the authentication information using the encryption key data shared by the communication apparatus **311-2**. The CPU **51** transmits the encrypted authentication information to the mobile terminal **32** present within the communication coverage area **41**A (containing the communication coverage area **41**AB) via the radio communication unit **58** and the directional antenna **41-1**.

The radio communication unit **58** in the communication apparatus **311-2** also receives the request for the authentication information from the mobile terminal **32** via the directional antenna **41-2**. In response to the request from the communication antenna **42**, the CPU **51** transmits the encryption key data shared by the communication apparatus **311-1** to the mobile terminal **32** present within the communication coverage area **41**B (containing the communication coverage area **41**AB) via the radio communication unit **58** and the directional antenna **41-2**.

The radio communication unit **108** in the mobile terminal **32** receives via the communication antenna **42** the encrypted authentication data from the communication apparatus **311-1** and the encryption key data from the communication apparatus **311-2**. The authentication processing controller **131** controls the data processor **132**, thus decrypting the authentication data using the encryption key data and thus obtaining the authentication information. The data processor **132** supplies the authentication data transmitter **133** with the obtained authentication information.

The authentication data transmitter **133** in the mobile terminal **32** is thus supplied with the authentication information.

After transmitting the encrypted authentication data via the directional antenna **41-1**, the radio communication unit **58** in the communication apparatus **311-1** transmits calling radio wave requesting the authentication information toward the communication coverage area **41**A (containing the communication coverage area **41**AB) from the directional antenna **41**.

Upon receiving the calling radio wave from the communication apparatus **311-1** via the communication antenna **42**, the radio communication unit **108** in the mobile terminal **32** in the communication coverage area **41**A so notifies the authentication processing controller **131**.

In step S**211** of FIG. **19**, the authentication processing controller **131** controls the authentication data transmitter **133**, thereby transmitting the authentication information via the radio communication unit **108** and the communication antenna **42**.

The radio communication unit **58** in the communication apparatus **311-1** receives the authentication information from the mobile terminal **32** via the directional antenna **41-1**, and supplies the CPU **51** with the received authentication information. In step S**221**, the CPU **51** performs an authentication process.

The CPU **51** in the communication apparatus **311-1** determines whether the current authentication information is correct one. If it is determined that the current authentication information is correct one, processing proceeds to step S**222**. The CPU **51** in the communication apparatus **311-1** transmits a notification of authentication via the radio communication unit **58** and the directional antenna **41-1** while also transmitting the authentication of the mobile terminal **32** to the communication apparatus **311-2** via the communication unit **56** and the network **312**.

The CPU **51** in the communication apparatus **311-1** may also transmit the authentication of the mobile terminal **32** to the mobile terminal **313** via the communication unit **56** and the network **312**.

Upon receiving the notification of the authentication via communication antenna **42**, the radio communication unit **108** in the mobile terminal **32** notifies the authentication processing controller **131** of the authentication. In step S**212**, the authentication processing controller **131** controls the content transmitter **321**, thereby transmitting the video data of the currently viewed content via the radio communication unit **108** and the communication antenna **42**.

The communication unit **56** in the communication apparatus **311-2** receives the authentication of the mobile terminal **32** from the communication apparatus **311-1** via the network **312**, and supplies the CPU **51** with the authentication of the mobile terminal **32**. The CPU **51** thus recognizes the authentication of the mobile terminal **32**.

The radio communication unit **58** in the communication apparatus **311-2** receives the video data from the mobile terminal **32** via the directional antenna **41-2**. In step S**231**, the CPU **51** controls the communication unit **56**, thereby transmitting the video data received by the radio communication unit **58** to the mobile terminal **313** via the network **312**.

In step S**241**, the radio communication unit **108** in the mobile terminal **313** receives the video data from the communication apparatus **311-2** via the network **312** and the communication antenna **42**, and supplies the data acquisition controller **231** (FIG. **12**) in the mobile terminal **313** with the received data.

The data acquisition controller **231** controls the data generator **232**, thereby generating a display signal responsive to the video data. The data generator **232** outputs the generated display signal to the data output controller **233**. In step S**242**, the data output controller **233** controls the video signal processor **110**, thereby causing an image responsive to the display signal from the data generator **232** to be displayed on the LCD **112**.

As shown in FIG. **18**, the same image as the image displayed on the LCD **112** of the mobile terminal **32** is displayed on the LCDs **112** of the mobile terminals **313-1** through **313-3**.

The user can thus connect the mobile terminal **32** to the network **312** by simply placing the mobile terminal **32** within the communication coverage area **41**AB of the directional antennas **41-1** and **41-2** for a predetermined period of time.

The data of the content of the mobile terminal **32** can be transmitted to the other mobile terminals **32** connected to the network **312** and displayed on the other mobile terminals **32**.

The transmission of the video data via the communication apparatus **311-2** in step S**231** of FIG. **19** may be performed by the two apparatuses **311-1** and **311-2**. In such a case, the transmission of the contents subsequent to the authentication notification in step S**222** is limited to only the mobile terminal **32** placed within the communication coverage area **41**AB. The service limited to a particular area is thus provided.

FIG. **20** illustrates a service providing system **351** of one embodiment of the present invention. The service providing system **351** is similar to the service providing system **301** of FIG. **15**. Elements identical to those described with reference to FIG. **4** are designated with the same reference numerals.

A network **312** of FIG. **20** is a radio LAN, for example. The network **312** connects to a server **363** managing the service providing system **351**. Instead of the mobile terminals **313-1** through **313-3** of FIG. **15**, an apparatus **364-1** including large loudspeakers **371-1** and **371-2**, and an apparatus **364-2** including a large-screen display **372**.

In the service providing system **351**, the mobile terminal **32** is connected to the network **312** as a result of authentication of the mobile terminal **32** by the communication apparatuses **311-1** through **311-2**. Data of contents of the mobile terminal **32** (or a server **363**) currently viewed on the mobile terminal **32** is transmitted to the apparatuses **364-1** and **364-2** via the network **312** to be output from the apparatuses **364-1** and **364-2**.

The server **363** manages data among the communication apparatuses **311-1** through **311-2** (e.g., the authentication information and the encryption key data), and stores a connection list of the network **312**. The server **363** thus manages connection of the network **312**. Furthermore, the server **363** stores the data of the contents, and provides a terminal or an apparatus accessing thereto with data of a content via the network **312**.

As the mobile terminals **313-1** through **313-3** connected to the network **33** of FIG. **4**, the communication terminals **311-1** through **311-2** and the server **363** connected to the network **312** of FIG. **20** may be considered as a single service providing apparatus.

The apparatus **364-1** including the large loudspeakers **371-1** and **371-2** receives audio data of a content supplied from apparatuses connected to the network **312** (such as the communication apparatuses **311-1** through **311-2** or the server **363**), and outputs sounds responsive to the received audio data from the large loudspeakers **371-1** and **371-2**.

The apparatus **364-2** having the large-screen display **372** receives video data (a still image or a moving image) of contents supplied from apparatuses (e.g., the communication apparatuses **311-1** through **311-2** or the server **363**) connected to the network **312**, and causes the large-screen display **372** to display an image responsive to the received video data.

If the mobile terminal **32** is permitted to be connected to the network **312**, the apparatuses **364-1** and **364-2** can receive data from the mobile terminal **32** via the network **312**.

As the service providing system **301** of FIG. **15**, the service providing system **351** of FIG. **20** provides the service of connecting to the network **312** and exchanging information with terminals and apparatus connected to the network **312** on the premise that the mobile terminal held by the user is placed in a predetermined area (i.e., the communication coverage area **41**AB) for a predetermined period of time.

If there is no need for distinguishing between the apparatuses **364-1** and **364-2**, each of the apparatuses **364-1** and **364-2** is simply referred to as an apparatus **364**.

FIG. **21** is a block diagram illustrating the server **363**.

A CPU **411** performs a variety of processes under the control of a program stored on a ROM **412** or a program loaded from a storage unit **418** to a RAM **413**. The RAM **413** also stores data required by the CPU **411** in the execution of the variety of processes.

The CPU **411**, the ROM **412**, and the RAM **413** are interconnected to each other via a bus **414**. The bus **414** also connects to an input-output interface **415**.

Connected to the input-output interface **415** are an input unit **416** including a keyboard, a mouse, etc., an output unit **417** including a display such as a cathode-ray tube (CRT), a liquid-crystal display (LCD), or the like, and a loudspeaker, a storage unit **418** such as a hard disk, and a communication unit **419** including a modem, a terminal adaptor, and a network interface. The communication unit **419** performs a communication process via the network **312**.

The input-output interface **415** also connects to a drive **420** as necessary. A removable medium such as magnetic disk **421**, an optical disk **422**, a magneto-optical disk **423**, or a

semiconductor memory **424**, is loaded onto the drive **420**. A computer program read from the removable medium is installed onto the storage unit **418** as necessary.

Each of the apparatuses **364-1** and **364-2** includes a computer basically identical in structure to the server **363** of FIG. **21**, although the detail of the structure thereof is omitted herein. In the discussion that follows, the structure of FIG. **21** also applies as the structure of the apparatuses **364-1** and **364-2**.

When the CPU **411** performs a variety of programs, the computer of FIG. **21** functions as each of the server **363** and the apparatuses **364-1** and **364-2**.

When a predetermined program is performed by the CPU **411** in each of the apparatuses **364-1** and **364-2**, the functional block diagram of FIG. **12** is implemented. The functional block diagram of FIG. **12** thus applies as the functional block diagram of the apparatuses **364-1** and **364-2**.

With reference to FIGS. **22** and **23**, the service provided by the service providing system **351** of FIG. **20** is discussed. Referring to FIGS. **22** and **23**, there are shown the directional antenna **41**, the large loudspeakers **371-1** and **371-2**, and the large-screen display **372**. The corresponding communication apparatus **311**, and apparatuses **364-1** and **364-2** are not shown.

Connected to the network **312** of FIG. **20** are the directional antennas **41-1** and **41-2** (the communication apparatuses **311-1** through **311-2**), a server **362** (not shown), the large loudspeakers **371-1** and **371-2** (apparatus **364-1**), and the large-screen display **372** (apparatus **364-1**), all arranged in a room (space) as shown in FIG. **22**. No output is provided from the large loudspeakers **371-1** and **371-2** and the large-screen display **372**.

For example, a user operates the mobile terminal **32** carried by himself to communicate with the server **362** in a one-to-one mode (in an ad hoc mode), and views a content stored on the storage unit **418** of the server **363**. More specifically, the mobile terminal **32** controls the radio communication unit **108**, thereby receiving video data (of a moving image) and audio data of a desired content from the server **362** via the communication antenna **42**. An image responsive to the received video data is thus displayed on the LCD **112** and a sound responsive to the received audio data is output from the loudspeaker **113**.

The LCD **112** of the mobile terminal **32** of FIG. **22** displays an image of a "background" corresponding to the video of the content from the server **362**, and a sound **451** responsive to the audio data of the content from the server **362** is output from the loudspeaker **113**.

The user places the mobile terminal **32** in the communication coverage area **41**AB centered on a table in a room where the communication apparatuses **311-1** through **311-2** are arranged. The mobile terminal **32** is thus placed in the communication coverage area **41**AB for a predetermined period of time.

As in FIG. **17**, original data of the authentication information is transmitted from the communication apparatuses **311-1** through **311-2** to the mobile terminal **32** present within the communication coverage area **41**AB. The mobile terminal **32** acquires the authentication information and transmits the authentication information via the communication antenna **42** in response to a request from the communication apparatus **311-1**.

In response to the authentication information from the mobile terminal **32**, the communication apparatus **311-1** authenticates the mobile terminal **32**, thereby providing service to the mobile terminal **32**. Referring to FIG. **22**, the communication apparatus **311-1** permits the mobile terminal **32** to be connected to the network **312** by issuing the notification of authentication to the mobile terminal **32** and apparatuses connected to the network **312**. Via the network **312**, the mobile terminal **32** can now communicate with the apparatus connected to the network **312**.

More specifically, with reference to FIG. **22**, the mobile terminal **32** causes the large loudspeakers **371-1** and **371-2** of the apparatus **364-1** to output the sound of the currently viewed content in response to the notification of the authentication from the communication apparatus **311-1**, and causes the large-screen display **372** of the apparatus **364-2** to display the image of the currently received content.

More specifically, the mobile terminal **32** transmits the currently viewed content information via the radio communication unit **108** and the communication antenna **42**. The content information contains identification information, the name, and the position of playback of the currently viewed content. The communication apparatus **311-2** receives the content information from the mobile terminal **32** via the directional antenna **41** and the radio communication unit **58**, and transmits via the communication unit **56** the received content information to the server **363** connected to the network **312**.

Upon receiving the content information from the mobile terminal **32**, the server **363** stops transmitting the data of the content that has been directly transmitted to the mobile terminal **32** in response to the content information. From the playback position information contained in the content information, the server **363** transmits the audio data of the content to the apparatus **364-1** via the network **312**, and the video data of the content to the apparatus **364-2** via the network **312**.

Upon receiving the audio data of the content via the network **312** and the communication unit **419**, the apparatus **364-1** outputs the sound responsive to the received audio data to the large loudspeakers **371-1** and **371-2**. Upon receiving the video data of the content via the network **312** and the communication unit **419**, the apparatus **364-2** displays the image responsive to the received video data on the large-screen display **372**.

As shown in FIG. **23**, the sound continued from the sound that has been output from the loudspeaker **113** of the mobile terminal **32** of FIG. **22** is output from the large loudspeakers **371-1** and **371-2**. The image of the "background" continued from the image that has been displayed from the LCD **112** of the mobile terminal **32** of FIG. **22** is displayed on the large-screen display **372**.

As shown in FIG. **23**, the same image is displayed to show that the image of the same content is continuously displayed.

The mobile terminal **32** is permitted to be connected to the network **312**. The mobile terminal **32** may directly transmit a command to the server **363**.

The process of the service providing system **351** of FIG. **20** is described below with reference to a flowchart of FIG. **24**.

As previously discussed with reference to FIG. **22**, no outputs are currently provided by the large loudspeakers **371-1** and **371-2** and the large-screen display **372**, each connected to the network **312** in the room (space).

The LCD **112** in the mobile terminal **32** now displays the image of the "background" responsive to the video data of the content from the server **362** while the loudspeaker **113** outputs the sound **451** responsive to the audio data of the content from the server **362**.

The user places the mobile terminal **32** in the communication coverage area **41**AB centered on the table in the room where the communication apparatuses **311-1** through **311-2**

are arranged. The user continuously places the mobile terminal **32** in the communication coverage area **41**AB for a predetermined period of time.

The mobile terminal **32**, and the communication apparatuses **311-1** through **311-2** perform steps S**11** through S**13**, steps S**21** and S**22**, and steps S**31** and S**32** discussed with reference to FIG. **9**.

The mobile terminal **32** receives encrypted authentication data from the communication apparatus **311-1**, encryption key data from the communication apparatus **311-2**, and obtains authentication information from the authentication data and the encryption key data. The authentication data transmitter **133** is thus supplied with the authentication information. This process is identical to the process discussed with reference to FIG. **9** or FIG. **19**, and the discussion thereof is not repeated herein.

Upon transmitting the encrypted authentication data via the directional antenna **41-1**, the radio communication unit **58** in the communication apparatus **311-1** transmits a calling radio wave requesting the authentication information toward the communication coverage area **41**A (containing the communication coverage area **41**AB) via the directional antenna **41-1**.

Upon receiving the calling radio wave from the communication apparatus **311-1**, the radio communication unit **108** in the mobile terminal **32** present within the communication coverage area **41**AB so notifies the authentication processing controller **131**.

In step S**311** of FIG. **24**, the authentication processing controller **131** controls the authentication data transmitter **133**, thereby transmitting the authentication information via the radio communication unit **108** and the communication antenna **42**.

The radio communication unit **58** in the communication apparatus **311-1** receives the authentication information from the mobile terminal **32** via the directional antenna **41-1**, and supplies the CPU **51** with the received authentication information. In step S**321**, the CPU **51** executes an authentication process.

The CPU **51** in the communication apparatus **311-1** determines whether the current authentication information is correct one. If it is determined that the current authentication information is correct one, processing proceeds to step S**322**. The CPU **51** in the communication apparatus **311-1** issues the notification of authentication via the radio communication unit **58** and the directional antenna **41-1** while issuing the notification of authentication of the mobile terminal **32** to the communication apparatus **311-2** and the server **363** via the communication unit **56** and the network **312**.

In response, the communication unit **419** in the server **363** receives the notification of authentication of the mobile terminal **32** from the communication apparatus **311-1** via the network **312**, and supplies the notification of authentication of the mobile terminal **32** to the CPU **411**. The CPU **411** adds the mobile terminal **32** to a connection list of the network **312**.

The CPU **51** in the communication apparatus **311-1** may also issue the notification of authentication of the mobile terminal **32** to each apparatus **364** via the communication unit **56** and the network **312**.

The radio communication unit **108** in the mobile terminal **32** receives the notification of authentication via the communication antenna **42**, and notifies the authentication processing controller **131** of the authentication. In step S**312**, the authentication processing controller **131** controls the content transmitter **321**, thereby causing the content transmitter **321** to transmit the currently viewed content information via the radio communication unit **108** and the communication antenna **42**.

When the radio communication unit **58** in the communication apparatus **311-1** receives the content information from the mobile terminal **32** via the directional antenna **41-1**, the CPU **51** controls in step S**323** the communication unit **56**, thereby causing the communication unit **56** to transmit the content information received by the radio communication unit **58** to the server **363** via the network **312**.

Upon receiving the content information from the communication apparatus **311-1** via the network **312**, the communication unit **419** in the server **363** supplies the received content information to the CPU **411**. In step S**331**, the CPU **411** controls the communication unit **419** in response to the content information (such as the identification information, the name, and the playback position of the currently viewed content), thereby stopping data transmission of the content to the mobile terminal **32** and transmit the data of the content from the playback position to the apparatus **364** via the network **312**.

In step S**341**, the communication unit **419** in the apparatus **364** receives the data of the content from the server **363** via the network **312**, and then supplies the received data to the data acquisition controller **231** (FIG. **12**) in the apparatus **364**. Processing proceeds to step S**342**.

The data acquisition controller **231** in the apparatus **364-1** controls the data generator **232**, causing the data generator **232** to generate the audio signal responsive to the audio data of the content. The data generator **232** outputs the generated audio signal to the data output controller **233**. In step S**342**, the data output controller **233** causes the large loudspeakers **371-1** and **371-2** in the output unit **417** to output the sound responsive to the audio signal from the data generator **232**.

The data acquisition controller **231** in the apparatus **364-2** controls the data generator **232**, thereby causing the data generator **232** to generates the display signal responsive to the video data of the content. The data generator **232** outputs the generated display signal to the data output controller **233**. In step S**342**, the data output controller **233** causes the large-screen display **372** of the output unit **417** to display the image responsive to the display signal from the data generator **232**.

As shown in FIG. **23**, the large loudspeakers **371-1** and **371-2** output the sound continued from the sound that has been output from the loudspeaker **113** of the mobile terminal **32** of FIG. **22**. The large-screen display **372** displays the image of the "background" continued from the image that has been displayed on the LCD **112** of the mobile terminal **32** of FIG. **22**.

The user can thus connect the mobile terminal **32** to the network **312** by simply placing the mobile terminal **32** within the communication coverage area **41**AB of the directional antennas **41-1** and **41-2**.

More specifically, by simply placing the mobile terminal in the communication coverage area of a plurality of directional antennas, the user can enjoy the content on a large loudspeaker and large-screen displays of other apparatuses connected to the network in succession to the content that has been enjoyed on an LCD and loudspeaker on a small mobile terminal.

The communication coverage area of the plurality of directional antennas is formed within the predetermined space. Using the formed communication coverage area, a user in a predetermined space can enjoy services of different levels depending on the characteristics of the area.

In the above discussion, the moving image, the still image, and the music content are handled. The present invention is

not limited to the moving image, the still image, and the music content and is also applicable to contents such as application software programs.

In the above discussion, the apparatuses connected to the network include the mobile terminal, and the apparatuses including the large loudspeaker or the large-screen displays. The apparatuses connected to the network may further include a personal computer, personal digital assistants (PDAs), reproducing apparatuses such as audio visual (AV) apparatuses, and consumer electronics (CE) including recording and reproducing apparatuses, and home electronics.

In the above discussion, the radio communication method of using the directional antenna is based on the IEEE 802.11b standard. The present invention is not limited to the IEEE 802.11b standard. Communication method based on the IEEE 802.11a standard, Bluetooth®, or other standard may be used. The present invention is also applicable to a radio communication technique providing directivity without using directional antenna.

The above-referenced series of process steps may be performed using hardware or software.

If the above-referenced series of process steps is performed using software, the program of the software may be installed from a recording medium onto a computer built in dedicated hardware or a general-purpose personal computer enabled to perform a variety of functions with a variety of programs installed thereon.

As shown in FIG. **5** or **21**, the storage medium includes a package medium such as a removable medium distributed to a user separate from a computer to provide the user with the program. The removable media include one of the magnetic disk (including a flexible disk) **81** or **421**, the optical disk (such as compact disk read-only memory (CD-ROM)), or digital versatile disk (DVD)) **82** or **422**, the magneto-optical disk (such as mini-disk (MD®) **83** or **423**, and the semiconductor memory **84** or **424**. The storage media also include the read-only memory (ROM) **53** or **412** or a hard disk contained in the storage unit **57** or **418**, each supplied in the apparatus to the user and storing the program.

The program may be installed from the above-mentioned removable medium to the computer of FIG. **5** or **21**. The program is also transmitted to the computer of FIG. **5** or **21** from a download site via digital satellite broadcasting in a wireless fashion, or transmitted to the computer of FIG. **5** or **21** in a wired fashion via a local area network (LAN) or via a network (not shown).

The process steps described in the flowcharts may be performed in the time-series order sequence, as previously stated. Alternatively, the process steps may be performed in parallel or separately.

In this specification, the system refers to a system including a plurality of apparatuses.

It should be understood by those skilled in the art that various modifications, combinations, sub-combinations and alterations may occur depending on design requirements and other factors insofar as they are within the scope of the appended claims or the equivalents thereof.

What is claimed is:

1. An information processing system comprising an information providing apparatus for providing a service, and a mobile terminal for receiving the service, the information providing apparatus comprising:

a plurality of directional antennas including a first directional antenna and a second directional antenna defining a first area in which communication coverage areas of the directional antennas overlap; and

a plurality of data communication means for transmitting data, including first data transmitted using the first directional antenna and second data transmitted using the second directional antenna, to the mobile terminal in the first area, and for receiving authentication information from the mobile terminal,

wherein the authentication information is provided by the mobile terminal only when the first data and the second data are received by the mobile terminal within a predetermined period of time, and

the mobile terminal comprising:

data receiving means for receiving the data in the first area; and

data processing means for processing the data.

2. The information processing system according to claim **1**, wherein:

the data forms a content,

the data processing means generates an output signal formed of the data of the content in response to the content received by the data receiving means, and

the mobile terminal further comprises output control means for outputting the output signal to a user.

3. The information processing system according to claim **1**, wherein the data contains information for authentication, and wherein the first data and the second data are required for the information providing apparatus to perform authentication.

4. The information processing system according to claim **3**,

wherein the data processing means obtains the information for authentication using a plurality of units of data received by the data receiving means, and

wherein the mobile terminal further comprises authentication information transmitting means for transmitting, to the information providing apparatus, the information for authentication obtained by the data processing means.

5. The information processing system according to claim **4**, wherein the information providing apparatus further comprises:

authentication information receiving means for receiving the information for authentication via the directional antennas; and

authentication means for authenticating the mobile terminal based on the information for authentication.

6. An information processing method of an information processing system including an information providing apparatus for providing a service, and a mobile terminal for receiving the service, the method comprising:

transmitting data to the mobile terminal present in a first area defined by the overlapping communication coverage areas of a first directional antenna and a second directional antenna, wherein transmitting data includes transmitting first data using the first directional antenna and transmitting second data using the second directional antenna;

receiving the data in the first area; and

performing authentication using the data, wherein the data received serves as authentication information only when the first data and the second data are received within a predetermined period of time.

7. An information processing system comprising an information providing apparatus for providing a service, and a mobile terminal for receiving the service, the information providing apparatus comprising:

a plurality of directional antennas including a first directional antenna and a second directional antenna defining a first area in which communication coverage areas of the directional antennas overlap; and

a plurality of data communication units transmitting data, including first data transmitted using the first directional antenna and second data transmitted using the second directional antenna, to the mobile terminal in the first area, and receiving authentication information from the mobile terminal,

wherein the authentication information is provided by the mobile terminal only when the first data and the second data are received by the mobile terminal within a predetermined period of time, and

the mobile terminal comprising:

a data receiving unit for receiving the data in the first area; and

a data processing unit for processing the data.

* * * * *