NOTES TO FORM PCT/ISA/220

These Notes are intended to give the basic instructions concerning the filing of amendments under Article 19. The Notes are based on the requirements of the Patent Cooperation Treaty, the Regulations and the Administrative Instructions under that Treaty. In case of discrepancy between these Notes and those requirements, the latter are applicable. For more detailed information, see also the *PCT Applicant's Guide*.

In these Notes, "Article," "Rule" and "Section" refer to the provisions of the PCT, the PCT Regulations and the PCT Administrative Instructions, respectively.

INSTRUCTIONS CONCERNING AMENDMENTS UNDER ARTICLE 19

The applicant has, after having received the international search report and the written opinion of the International Searching Authority, one opportunity to amend the claims of the international application. It should however be emphasized that, since all parts of the international application (claims, description and drawings) may be amended during the international preliminary examination procedure, there is usually no need to file amendments of the claims under Article 19except where, e.g. the applicant wants the latter to be published for the purposes of provisional protection or has another reason for amending the claims before international publication. Furthermore, it should be emphasized that provisional protection is available in some States only (see *PCT Applicant's Guide*).

The attention of the applicant is drawn to the fact that amendments to the claims under Article 19 are not allowed where the International Searching Authority has declared, under Article 17(2), that no international search report would be established (see *PCT Applicant's Guide*, paragraph 296).

What parts of the international application may be amended ?

Under Article 19, only the claims may be amended.

During the international phase, the claims may also be amended (or further amended) under Article 34 before the International Preliminary Examining Authority. The description and drawings may only be amended under Article 34 before the International Preliminary Examining Authority.

Upon entry into the national phase, all parts of the international application may be amended under Article 28 or, where applicable, Article 41.

When ? Within 2 months from the date of transmittal of the international search report or 16 months from the priority date, whichever time limit expires later. It should be noted, however, that the amendments will be considered as having been received on time if they are received by the International Bureau after the expiration of the applicable time limit but before the completion of the technical preparations for international publication (Rule 46.1).

Where not to file the amendments ?

The amendments may only be filed with the International Bureau and not with the receiving Office or the International Searching Authority (Rule 46.2).

Where a demand for international preliminary examination has been/is filed, see below.

How ? Either by cancelling one or more entire claims, by adding one or more new claims or by amending the text of one or more of the claims as filed.

A replacement sheet or sheets containing a complete set of claims in replacement of all the claims previously filed must be submitted.

Where a claim is cancelled, no renumbering of the other claims is required. In all cases where claims are renumbered, they must be renumbered consecutively in Arabic numerals (Section 205(a)).

The amendments must be made in the language in which the international application is to be published.

What documents must/may accompany the amendments ?

Letter (Section 205(b)):

The amendments must be submitted with a letter.

The letter will not be published with the international application and the amended claims. It should not be confused with the "Statement under Article 19(1)" (see below, under "Statement under Article 19(1)").

The letter must be in English or French, at the choice of the applicant. However, if the language of the international application is English, the letter must be in English; if the language of the international application is French, the letter must be in French.

NOTES TO FORM PCT/ISA/220 (continued)

The letter must indicate the differences between the claims as filed and the claims as amended. It must, in particular, indicate, in connection with each claim appearing in the international application (it being understood that identical indications concerning several claims may be grouped), whether

(i) the claim is unchanged;
(ii) the claim is cancelled;
(iii) the claim is new;
(iv) the claim replaces one or more claims as filed;
(v) the claim is the result of the division of a claim as filed.

The following examples illustrate the manner in which amendments must be explained in the accompanying letter:

1. [Where originally there were 48 claims and after amendment of some claims there are 51]:
   "Claims 1 to 29, 31, 32, 34, 35, 37 to 48 replaced by amended claims bearing the same numbers; claims 30, 33 and 36 unchanged; new claims 49 to 51 added."
2. [Where originally there were 15 claims and after amendment of all claims there are 11]:
   "Claims 1 to 15 replaced by amended claims 1 to 11."
3. [Where originally there were 14 claims and the amendments consist in cancelling some claims and in adding new claims]:
   "Claims 1 to 6 and 14 unchanged; claims 7 to 13 cancelled; new claims 15, 16 and 17 added." or
   "Claims 7 to 13 cancelled; new claims 15, 16 and 17 added; all other claims unchanged."
4. [Where various kinds of amendments are made]:
   "Claims 1-10 unchanged; claims 11 to 13, 18 and 19 cancelled; claims 14, 15 and 16 replaced by amended claim 14; claim 17 subdivided into amended claims 15, 16 and 17; new claims 20 and 21 added."

"Statement under Article 19(1)" (Rule 46.4)

The amendments may be accompanied by a statement explaining the amendments and indicating any impact that such amendments might have on the description and the drawings (which cannot be amended under Article 19(1)).

The statement will be published with the international application and the amended claims.

It must be in the language in which the international application is to be published.

It must be brief, not exceeding 500 words if in English or if translated into English.

It should not be confused with and does not replace the letter indicating the differences between the claims as filed and as amended. It must be filed on a separate sheet and must be identified as such by a heading, preferably by using the words "Statement under Article 19(1)."

It may not contain any disparaging comments on the international search report or the relevance of citations contained in that report. Reference to citations, relevant to a given claim, contained in the international search report may be made only in connection with an amendment of that claim.

Consequence if a demand for international preliminary examination has already been filed

If, at the time of filing any amendments and any accompanying statement, under Article 19, a demand for international preliminary examination has already been submitted, the applicant must preferably, at the time of filing the amendments (and any statement) with the International Bureau, also file with the International Preliminary Examining Authority a copy of such amendments (and of any statement) and, where required, a translation of such amendments for the procedure before that Authority (see Rules 55.3(a) and 62.2, first sentence). For further information, see the Notes to the demand form (PCT/IPEA/401).

If a demand for international preliminary examination is made, the written opinion of the International Searching Authority will, except in certain cases where the International Preliminary Examining Authority did not act as International Searching Authority and where it has notified the International Bureau under Rule 66.1*bis*(b), be considered to be a written opinion of the International Preliminary Examining Authority. If a demand is made, the applicant may submit to the International Preliminary Examining Authority a reply to the written opinion together, where appropriate, with amendments before the expiration of 3 months from the date of mailing of FormPCT/ISA/220 or before the expiration of 22 months from the priority date, whichever expires later (Rule 43*bis*.1(c)).

Consequence with regard to translation of the international application for entry into the national phase

The applicant's attention is drawn to the fact that, upon entry into the national phase, a translation of the claims as amended under Article 19 may have to be furnished to the designated/elected Offices, instead of, or in addition to, the translation of the claims as filed.
For further details on the requirements of each designated/elected Office, see the *PCT Applicant's Guide* , National Chapters.

PATENT COOPERATION TREATY

PCT

INTERNATIONAL SEARCH REPORT

(PCT Article 18 and Rules 43 and 44)

Applicant's or agent's file reference F13W4861	**FOR FURTHER ACTION** see Form PCT/ISA/220 as well as, where applicable, item 5 below.	
International application No. PCT/CN2013/081630	International filing date *(day/month/year)* 16 Aug. 2013(16.08.2013)	(Earliest)Priority date *(day/month/year)* 17 Aug. 2012(17.08.2012)
Applicant FLEXTRONICS AP, LLC et al.		

This international search report has been prepared by this International Searching Authority and is transmitted to the applicant according to Article 18. A copy is being transmitted to the International Bureau.

This international search report consists of a total of 4 sheets.

☐ It is also accompanied by a copy of each prior art document cited in this report.

1. **Basis of the report**
   a. With regard to the **language**, the international search was carried out on the basis of:
      ☒ the international application in the language in which it was filed
      ☐ a translation of the international application into _____, which is the language of a translation furnished for the purposes of international search (Rules 12.3(a) and 23.1(b))
   b. ☐ This international search report has been established taking into account the **rectification of an obvious mistake** authorized by or notified to this Authority under Rule 91 (Rule 43.6bis(a)).
   c. ☐ With regard to any **nucleotide and /or amino acid sequence** disclosed in the international application, see Box No. I.
2. ☐ **Certain claims were found unsearchable** (see Box No. II)
3. ☐ **Unity of invention is lacking** (see Box No. III)
4. With regard to the **title**,
   ☒ the text is approved as submitted by the applicant.
   ☐ the text has been established by this Authority to read as follows:
5. With regard to the **abstract**,
   ☒ the text is approved as submitted by the applicant.
   ☐ the text has been established, according to Rule 38.2(b), by this Authority as it appears in Box IV. The applicant may, within one month from the date of mailing of this international search report, submit comments to this Authority.
6. With regard to the **drawings**,
   a. The figure of the **drawings** to be published with the abstract is Figure No. 16A
      ☐ as suggested by the applicant
      ☒ as selected by this Authority, because the applicant failed to suggest a figure
      ☐ as selected by this Authority, because this figure better characterizes the invention
   b. ☐ none of the figures is to be published with the abstract

中华人民共和国国家知识产权局 专利审查业务章

INTERNATIONAL SEARCH REPORT

International application No.
PCT/CN2013/081630

A. CLASSIFICATION OF SUBJECT MATTER

See the extra sheet

According to International Patent Classification (IPC) or to both national classification and IPC

B. FIELDS SEARCHED

Minimum documentation searched (classification system followed by classification symbols)

IPC: H04N, H04H

Documentation searched other than minimum documentation to the extent that such documents are included in the fields searched

Electronic data base consulted during the international search (name of data base and, where practicable, search terms used)

CNPAT, CNKI, EPODOC, WPI, IEEE:

EPG, program????, guide, favorite, reminder, list, channel, add, new, delete, remove, clear, user?

C. DOCUMENTS CONSIDERED TO BE RELEVANT

Category*	Citation of document, with indication, where appropriate, of the relevant passages	Relevant to claim No.
X	CN 101472102 A (KONKA GROUP CO., LTD.) 01 July 2009(01.07.2009) description, page 1, last three paragraphs, page 2, paragraphs 8-9, page 4, paragraphs 19-21 figure 2	1,6-9,14-16,19-20
Y		2-5,10-13,17-18
Y	CN 1832534 A (SHENZHEN DIWEITE DIGITAL VIDEO TECHNOLOG CORP.) 13 September 2006(13.09.2006) abstract	2-5,10-13,17-18
A	US 2001/0010097 A1 (LEE, Kyuheon) 26 July 2001(26.07.2001) the whole document	1-20
A	US 2003/0225777 A1 (MARSH, David J.) 04 December 2003(04.12.2003) the whole document	1-20

☐ Further documents are listed in the continuation of Box C. ☒ See patent family annex.

* Special categories of cited documents:

"A" document defining the general state of the art which is not considered to be of particular relevance

"E" earlier application or patent but published on or after the international filing date

"L" document which may throw doubts on priority claim (S) or which is cited to establish the publication date of another citation or other special reason (as specified)

"O" document referring to an oral disclosure, use, exhibition or other means

"P" document published prior to the international filing date but later than the priority date claimed

"T" later document published after the international filing date or priority date and not in conflict with the application but cited to understand the principle or theory underlying the invention

"X" document of particular relevance; the claimed invention cannot be considered novel or cannot be considered to involve an inventive step when the document is taken alone

"Y" document of particular relevance; the claimed invention cannot be considered to involve an inventive step when the document is combined with one or more other such documents, such combination being obvious to a person skilled in the art

"&"document member of the same patent family

Date of the actual completion of the international search	Date of mailing of the international search report
02 November 2013	**21 Nov. 2013 (21.11.2013)**
Name and mailing address of the ISA/CN The State Intellectual Property Office, the P.R.China 6 Xitucheng Rd., Jimen Bridge, Haidian District, Beijing, China 100088 Facsimile No. 86-10-62019451	Authorized officer KANG, Kai Telephone No. (86-10)62413998

Form PCT/ISA /210 (second sheet) (July 2009)

INTERNATIONAL SEARCH REPORT
Information on patent family members

International application No.
PCT/CN2013/081630

Patent Documents referred in the Report	Publication Date	Patent Family	Publication Date
CN 101472102 A	01.07.2009	None	
CN 1832534 A	13.09.2006	None	
US 2001/0010097 A1	26.07.2001	KR 2001-0073903 A	03.08.2001
US 2003/0225777 A1	04.12.2003	None	

Form PCT/ISA /210 (patent family annex) (July 2009)

INTERNATIONAL SEARCH REPORT

International application No.
PCT/CN2013/081630

A. CLASSIFICATION OF SUBJECT MATTER

H04H 60/72 (2008.01) i

H04N 5/445 (2011.01) i

Form PCT/ISA /210 (extra sheet) (July 2009)

PATENT COOPERATION TREATY

From the
INTERNATIONAL SEARCHING AUTHORITY

To:

100101

A0601,Huibin Building No.8,Beichen Dong(East) Street Chao Yang District Beijing,China

LIU, SHEN&ASSOCIATES

PCT

WRITTEN OPINION OF THE INTERNATIONAL SEARCHING AUTHORITY

(PCT Rule 43 *bis*.1)

Date of mailing (*day/month/year*)	21 Nov. 2013 (21.11.2013)
Applicant's or agent's file reference: F13W4861	**FOR FURTHER ACTION** See paragraph 2 below

International application No.	International filing date(*day/month/year*)	Priority date (*day/month/year*)
PCT/CN2013/081630	16 Aug. 2013(16.08.2013)	17 Aug. 2012(17.08.2012)

International Patent Classification (IPC) or both national classification and IPC
See the Supplemental Box

Applicant
FLEXTRONICS AP, LLC et al.

1. This opinion contains indications relating to the following items:

- ☒ Box No. I Basis of the opinion
- ☐ Box No.II Priority
- ☐ Box No. III Non-establishment of opinion with regard to novelty, inventive step and industrial applicability
- ☐ Box No. IV Lack of unity of invention
- ☒ Box No. V Reasoned statement under Rule 43*bis*.1(a)(i) with regard to novelty, inventive step or industrial applicability; citations and explanations supporting such statement
- ☐ Box No.VI Certain documents cited
- ☐ Box No. VII Certain defects in the international application
- ☐ Box No.VIII Certain observations on the international application

2. **FURTHER ACTION**

If a demand for international preliminary examination is made, this opinion will be considered to be a written opinion of the International Preliminary Examining Authority ("IPEA") except that this does not apply where the applicant chooses an Authority other than this one to be the IPEA and the chosen IPEA has notified the International Bureau under Rule 66.1*bis*(b) that written opinions of this International Searching Authority will not be so considered.

If this opinion is, as provided above, considered to be a written opinion of the IPEA, the applicant is invited to submit to the IPEA a written reply together, where appropriate, with amendments, before the expiration of **3** months from the date of mailing of Form PCT/ISA/220 or before the expiration of **22** months from the priority date, whichever expires later.

For further options, see Form PCT/ISA/220.

3. For further details, see notes to Form PCT/ISA/220.

Name and mailing address of the ISA/CN	Date of completion of this opinion	Authorized officer
The State Intellectual Property Office, the P.R.China 6 Xitucheng Rd., Jimen Bridge, Haidian District, Beijing, China 100088 Facsimile No. 86-10-62019451	12 Nov. 2013 (12.11.2013)	KANG, Kai Telephone No. (86-10)62413998

中华人民共和国国家知识产权局 专利审查业务章

Form PCT/ISA/237(cover sheet)(July 2009)

WRITTEN OPINION OF THE INTERNATIONAL SEARCHING AUTHORITY

International application No.
PCT/CN2013/081630

Box No. I Basis of the opinion

1. With regard to the **language**, this opinion has been established on the basis of:

   ☒ the international application in the language in which it was filed.
   ☐ a translation of the international application into _____, which is the language of a translation furnished for the purposes of international search (Rules 12.3(a) and 23.1(b)).

2. ☐ This opinion has been established taking into account the **rectification of an obvious mistake** authorized by or notified to this Authority under Rule 91(Rule 43bis.1(a))

3. With regard to any **nucleotide and/or amino acid sequence** disclosed in the international application ,this opinion has been established on the basis of :

   a. a sequence listing filed or furnished
      ☐ on paper
      ☐ in electronic form

   b. time of filing or furnishing
      ☐ contained in the applicant as filed
      ☐ filed together with the application in electronic form
      ☐ furnished subsequently to this Authority for the purposes of search

4. ☐ In addition, in the case that more than one version or copy of a sequence listing has been filed or furnished, the required statements that the information in the subsequent or additional copies is identical to that in the application as filed or does not go beyond the application as filed, as appropriate, were furnished.

5. Additional comments:

WRITTEN OPINION OF THE INTERNATIONAL SEARCHING AUTHORITY

International application No.
PCT/CN2013/081630

Box No. V **Reasoned statement under Rule 43*bis*.1(a)(i) with regard to novelty, inventive step or industrial applicability; citations and explanations supporting such statement**

1. Statement:

Novelty (N)	Claims	1-20	YES
	Claims	None	NO
Inventive step (IS)	Claims	None	YES
	Claims	1-20	NO
Industrial applicability (IA)	Claims	1-20	YES
	Claims	None	NO

2. Citations and explanations

Reference is made to the following documents:

D1: CN 101472102 A, 01 July 2009(01.07.2009);

D2: CN 1832534 A, 13 September 2006(13.09.2006).

I. Novelty and Inventive step

Claim 1 claims a method of presenting EPG, the document D1 is regarded as the closest prior art to the subject-matter of claim 1, and discloses (see description, page 1, last three paragraphs, figure 2): analyzing the information in EPGs (displaying a EPG on TV means presenting live television content and programming guide, and the programming guide comprising channels and programs), indicating the favorite program of users; adding the favorite program to a remind list; displaying the remind to the user when the program will begin in a predetermined time. The document D1 also discloses (see description, page 2, paragraphs 8-9): searching the EPG by the name of a program. The subject-matter of claim 1 therefore differs from D1 in that: 1. receiving a selection from a user indicating a reminder or a favorite; 2. searching the programming guide by channel; 3. removing the reminder dialog. The subject-matter of claim 1 is therefore novel (Article 33(2) PCT). Claims 2-8 are dependent on claim 1, and as such are also novel (Article 33(2) PCT). However, the document D1 also discloses (see description, page 4, paragraphs 19-21): setting the reminder list automatically, so the users don't have to manually set, which implies the users need to select the reminder in the prior arts. Therefore, it would be obvious to the person skilled in the art to receiving a selection from a user indicating a reminder or a favorite before set the reminder list. Channel and name are common information of a program, searching a program by channel or name is widely used. At last, it's well-known that a dialog should be removed when the users had already seen it, and it would be obvious to the person skilled in the art to remove the dialog when the users select a future program, or the users cancel the dialog, or on user input occurrences with in a predetermined time. The solution proposed in claim 1 of the present application cannot be considered as involving an inventive step (Article 33(3) PCT).

Claims 2-5 are dependent on claim 1, further comprises setting or clearing the favorite of programs already favorite or not favorite. The document D2 discloses (see abstract): the users can set or clear the favorite list conveniently. D2 discloses setting or clearing the favorite list to maintenance the favorite list. It would be obvious for the person skilled in the art to apply the teaching of D2 to D1. Therefore, the subject matter of claims 2-5 cannot be considered as involving an inventive step (Article 33(3) PCT).

Claim 6 is dependent on claim 1. Document D1 already discloses displaying a reminder dialog when the program will begin with a predetermined time (see description, page 1, last three paragraphs, figure 2), and searching the matched program by name (see description, page 2, paragraphs 8-9). Document D1 fail to disclose searching by channel; however, searching a program by channel or name is widely used. The solution proposed in claim 6 of the present application cannot be considered as involving an inventive step (Article 33(3) PCT).

Claim 7 is dependent on claim 6. It would be obvious to the person skilled in the art to store the reminder in data storage and delete the past reminder. The solution proposed in claim 7 of the present application cannot be considered as involving an inventive step (Article 33(3) PCT).

Claim 8 is dependent on claim 1. It would be obvious to the person skilled in the art to search a program by time of day. The solution proposed in claim 8 of the present application cannot be considered as involving an inventive step (Article 33(3) PCT).

See the Supplemental Box

Supplemental Box

In case **the space in any of the preceding boxes is not sufficient.**

Continuation of : Citations and explanations

Claim 9 claims a television, the document D1 is regarded as the closest prior art to the subject-matter of claim 9, and discloses (see description, page 1, last three paragraphs, figure 2): analyzing the information in EPGs (displaying a EPG on TV means presenting live television content and programming guide, and the programming guide comprising channels and programs), indicating the favorite program of users; adding the favorite program to a remind list; displaying the remind to the user when the program will begin in a predetermined time. The document D1 also discloses (see description, page 2, paragraphs 8-9): searching the EPG by the name of a program. The subject-matter of claim 9 therefore differs from D1 in that: 1.processor and storage; 2. receiving a selection from a user indicating a reminder or a favorite; 3. searching the programming guide by channel; 4. removing the reminder dialog. The subject-matter of claim 9 is therefore novel (Article 33(2) PCT). Claims 10-15 are dependent on claim 9, and as such are also novel (Article 33(2) PCT). However, the document D1 also discloses (see description, page 4, paragraphs 19-21): setting the reminder list automatically, so the users don't have to manually set, which implies the users need to select the reminder in the prior arts. Therefore, it would be obvious to the person skilled in the art to receiving a selection from a user indicating a reminder or a favorite before set the reminder list. Channel and name are common information of a program, searching a program by channel or name is widely used. It's well-known that a dialog should be removed when the users had already seen it, and it would be obvious to the person skilled in the art to remove the dialog when the users select a future program, or the users cancel the dialog, or on user input occurrences with in a predetermined time. At last, processor and storage are common parts of a television. The solution proposed in claim 9 of the present application cannot be considered as involving an inventive step (Article 33(3) PCT).

Claims 10-13 are dependent on claim 9, further comprises setting or clearing the favorite of programs already favorite or not favorite. The document D2 discloses (see abstract): the users can set or clear the favorite list conveniently. D2 discloses setting or clearing the favorite list to maintenance the favorite list. It would be obvious for the person skilled in the art to apply the teaching of D2 to D1. Therefore, the subject matter of claims 10-13 cannot be considered as involving an inventive step (Article 33(3) PCT).

Claim 14 is dependent on claim 9. Document D1 already discloses displaying a reminder dialog when the program will begin with a predetermined time (see description, page 1, last three paragraphs, figure 2), and searching the matched program by name (see description, page 2, paragraphs 8-9). Document D1 fail to disclose searching by channel; however, searching a program by channel or name is widely used. The solution proposed in claim 14 of the present application cannot be considered as involving an inventive step (Article 33(3) PCT).

Claim 15 is dependent on claim 14. It would be obvious to the person skilled in the art to store the reminder in data storage and delete the past reminder. The solution proposed in claim 15 of the present application cannot be considered as involving an inventive step (Article 33(3) PCT).

Claim 16 claims a non-transitory medium with instructions, the instructions are correspoding to the method of claim 1 when executed, based on the opinion of claim 1, claim 6 is also novel (Article 33(2) PCT). But cannot be considered as involving an inventive step (Article 33(3) PCT). Claims 17-20 are dependent on claim 16, and as such are also novel (Article 33(2) PCT).

Claims 17-18 are dependent on claim 16, further comprises setting or clearing the favorite of programs already favorite or not favorite. The document D2 discloses (see abstract): the users can set or clear the favorite list conveniently. D2 discloses setting or clearing the favorite list to maintenance the favorite list. It would be obvious for the person skilled in the art to apply the teaching of D2 to D1. Therefore, the subject matter of claims 17-18 cannot be considered as involving an inventive step (Article 33(3) PCT).

Claim 19 is dependent on claim 18. It would be obvious to the person skilled in the art to store the reminder in data storage and delete the past reminder. The solution proposed in claim 19 of the present application cannot be considered as involving an inventive step (Article 33(3) PCT).

Claim 20 is dependent on claim 16. It would be obvious to the person skilled in the art to search a program by time of day. The solution proposed in claim 20 of the present application cannot be considered as involving an inventive step (Article 33(3) PCT).

II. Industrial applicability

Claims 1-20 can find industrial applicability in the technical field of data printing, and thus meet the requirements of Article 33(4) PCT.

Continuation of : International Patent Classification (IPC) or both national classification and IPC

H04H 60/72 (2008.01) i

H04N 5/445 (2011.01) i

PATENT COOPERATION TREATY

From the INTERNATIONAL SEARCHING AUTHORITY

To: THAINE LENNOX-GENTLE
SHERIDAN ROSS P.C.
1560 BROADWAY
SUITE 1200
DENVER, CO 80202

PCT

NOTIFICATION OF TRANSMITTAL OF THE INTERNATIONAL SEARCH REPORT AND THE WRITTEN OPINION OF THE INTERNATIONAL SEARCHING AUTHORITY, OR THE DECLARATION

(PCT Rule 44.1)

	Date of mailing *(day/month/year)* 29 NOV 2013
Applicant's or agent's file reference. 6583-509-PCT	**FOR FURTHER ACTION** See paragraphs 1 and 4 below
International application No. PCT/US2013/055298	International filing date *(day/month/year)* 16 August 2013
Applicant FLEXTRONICS AP, LLC	

1. ☒ The applicant is hereby notified that the international search report and the written opinion of the International Searching Authority have been established and are transmitted herewith.

   Filing of amendments and statement under Article 19:
   The applicant is entitled, if he so wishes, to amend the claims of the international application (see Rule 46):

   When? The time limit for filing such amendments is normally two months from the date of transmittal of the international search report.

   Where? Directly to the International Bureau of WIPO, 34 chemin des Colombettes 1211 Geneva 20, Switzerland, Facsimile No.: +41 22 338 82 70

   For more detailed instructions, see *PCT Applicant's Guide*, International Phase, paragraphs 9.004 – 9.011.

2. ☐ The applicant is hereby notified that no international search report will be established and that the declaration under Article 17(2)(a) to that effect and the written opinion of the International Searching Authority are transmitted herewith.

3. ☐ **With regard to any protest** against payment of (an) additional fee(s) under Rule 40.2, the applicant is notified that:

   ☐ the protest together with the decision thereon has been transmitted to the International Bureau together with any request to forward the texts of both the protest and the decision thereon to the designated Offices.

   ☐ no decision has been made yet on the protest; the applicant will be notified as soon as a decision is made.

4. **Reminders**

   The applicant may submit comments on an informal basis on the written opinion of the International Searching Authority to the International Bureau. The International Bureau will send a copy of such comments to all designated Offices unless an international preliminary examination report has been or is to be established. Following the expiration of 30 months from the priority date, these comments will also be made available to the public.

   Shortly after the expiration of **18 months** from the priority date, the international application will be published by the International Bureau. If the applicant wishes to avoid or postpone publication, a notice of withdrawal of the international application, or of the priority claim, must reach the International Bureau before the completion of the technical preparations for international publication (Rules 90*bis*.1 and 90*bis*.3).

   Within **19 months** from the priority date, but only in respect of some designated Offices, a demand for international preliminary examination must be filed if the applicant wishes to postpone the entry into the national phase **until 30 months** from the priority date (in some Offices even later); otherwise, the applicant must, **within 20 months** from the priority date, perform the prescribed acts for entry into the national phase before those designated Offices.

   In respect of other designated Offices, the time limit of **30 months** (or later) will apply even if no demand is filed within 19 months.

   For details about the applicable time limits, Office by Office, see www.wipo.int/pct/en/texts/time_limits.html and the *PCT Applicant's Guide*, National Chapters.

Name and mailing address of the ISA/ Mail Stop PCT, Attn: ISA/US Commissioner for Patents P.O. Box 1450, Alexandria, Virginia 22313-1450 Facsimile No. 571-273-3201	Authorized officer Blaine R. Copenheaver PCT Helpdesk: 571-272-4300 Telephone No. PCT OSP: 571-272-7774

Form PCT/ISA/220 (July 2010)

PATENT COOPERATION TREATY

PCT

INTERNATIONAL SEARCH REPORT

(PCT Article 18 and Rules 43 and 44)

Applicant's or agent's file reference 6583-509-PCT	**FOR FURTHER ACTION**	see Form PCT/ISA/220 as well as, where applicable, item 5 below.
International application No. PCT/US2013/055298	International filing date *(day/month/year)* 16 August 2013	(Earliest) Priority Date *(day/month/year)* 17 August 2012
Applicant FLEXTRONICS AP, LLC		

This international search report has been prepared by this International Searching Authority and is transmitted to the applicant according to Article 18. A copy is being transmitted to the International Bureau.

This international search report consists of a total of 2 sheets.

☐ It is also accompanied by a copy of each prior art document cited in this report.

1. **Basis of the report**
   a. With regard to the **language**, the international search was carried out on the basis of:
      ☒ the international application in the language in which it was filed.
      ☐ a translation of the international application into _____ which is the language of a translation furnished for the purposes of international search (Rules 12.3(a) and 23.1(b)).
   b. ☐ This international search report has been established taking into account the **rectification of an obvious mistake** authorized by or notified to this Authority under Rule 91 (Rule 43.6*bis*(a)).
   c. ☐ With regard to any **nucleotide and/or amino acid sequence** disclosed in the international application, see Box No. I.
2. ☐ **Certain claims were found unsearchable** (see Box No. II).
3. ☐ **Unity of invention is lacking** (see Box No. III).
4. With regard to the **title**,
   ☒ the text is approved as submitted by the applicant.
   ☐ the text has been established by this Authority to read as follows:
5. With regard to the **abstract**,
   ☒ the text is approved as submitted by the applicant.
   ☐ the text has been established, according to Rule 38.2, by this Authority as it appears in Box No. IV. The applicant may, within one month from the date of mailing of this international search report, submit comments to this Authority.
6. With regard to the **drawings**,
   a. the figure of the **drawings** to be published with the abstract is Figure No. 34
      ☒ as suggested by the applicant.
      ☐ as selected by this Authority, because the applicant failed to suggest a figure.
      ☐ as selected by this Authority, because this figure better characterizes the invention.
   b. ☐ none of the figures is to be published with the abstract.

Form PCT/ISA/210 (first sheet) (July 2009)

INTERNATIONAL SEARCH REPORT

International application No.
PCT/US2013/055298

A. CLASSIFICATION OF SUBJECT MATTER
IPC(8) - H04N 7/173 (2013.01)
USPC - 725/27
According to International Patent Classification (IPC) or to both national classification and IPC

B. FIELDS SEARCHED

Minimum documentation searched (classification system followed by classification symbols)
IPC(8) - G06F 3/00; H04N 7/16, 173 (2013.01)
USPC -715/ 709, 738, 760; 725/27

Documentation searched other than minimum documentation to the extent that such documents are included in the fields searched
CPC - G06F 3/00; H04N 7/16, 173 (2013.01)

Electronic data base consulted during the international search (name of data base and, where practicable, search terms used)
Google, Orbit, Google Patents

C. DOCUMENTS CONSIDERED TO BE RELEVANT

Category*	Citation of document, with indication, where appropriate, of the relevant passages	Relevant to claim No.
Y	US 2008/0022309 A1 (BEGEJA et al) 24 January 2008 (24.01.2008) entire document	1-20
Y	US 2010/0180292 A1 (EPSTEIN e al) 15 July 2010 (15.07.2010) entire document	1-20
A	US 2011/0289419 A1 (YU et al) 24 November 2011 (24.11.2011) entire document	1-20
A	US 2012/0200574 A1 (HILL et al) 09 August 2012 (09.08.2012) entire document	1-20
A	WO 99/21308 A1 (MUGURA et al) 29 April 1999 (29.04.1999) entire document	1-20

☐ Further documents are listed in the continuation of Box C. ☐

* Special categories of cited documents:
"A" document defining the general state of the art which is not considered to be of particular relevance
"E" earlier application or patent but published on or after the international filing date
"L" document which may throw doubts on priority claim(s) or which is cited to establish the publication date of another citation or other special reason (as specified)
"O" document referring to an oral disclosure, use, exhibition or other means
"P" document published prior to the international filing date but later than the priority date claimed
"T" later document published after the international filing date or priority date and not in conflict with the application but cited to understand the principle or theory underlying the invention
"X" document of particular relevance; the claimed invention cannot be considered novel or cannot be considered to involve an inventive step when the document is taken alone
"Y" document of particular relevance; the claimed invention cannot be considered to involve an inventive step when the document is combined with one or more other such documents, such combination being obvious to a person skilled in the art
"&" document member of the same patent family

Date of the actual completion of the international search
11 November 2013

Date of mailing of the international search report
29 NOV 2013

Name and mailing address of the ISA/US
Mail Stop PCT, Attn: ISA/US, Commissioner for Patents
P.O. Box 1450, Alexandria, Virginia 22313-1450
Facsimile No. 571-273-3201

Authorized officer:
Blaine R. Copenheaver
PCT Helpdesk: 571-272-4300
PCT OSP: 571-272-7774

Form PCT/ISA/210 (second sheet) (July 2009)

PATENT COOPERATION TREATY

From the
INTERNATIONAL SEARCHING AUTHORITY

To: THAINE LENNOX-GENTLE
SHERIDAN ROSS P.C.
1560 BROADWAY
SUITE 1200
DENVER, CO 80202

PCT

WRITTEN OPINION OF THE
INTERNATIONAL SEARCHING AUTHORITY

(PCT Rule 43*bis*.1)

Date of mailing *(day/month/year)* 29 NOV 2013

Applicant's or agent's file reference	FOR FURTHER ACTION
6583-509-PCT	See paragraph 2 below

International application No.	International filing date *(day/month/year)*	Priority date *(day/month/year)*
PCT/US2013/055298	16 August 2013	17 August 2012

International Patent Classification (IPC) or both national classification and IPC
IPC(8) - H04N 7/173 (2013.01)
USPC - 725/27

Applicant FLEXTRONICS AP, LLC

1. This opinion contains indications relating to the following items:

- [x] Box No. I Basis of the opinion
- [ ] Box No. II Priority
- [ ] Box No. III Non-establishment of opinion with regard to novelty, inventive step and industrial applicability
- [ ] Box No. IV Lack of unity of invention
- [x] Box No. V Reasoned statement under Rule 43*bis*.1(a)(i) with regard to novelty, inventive step or industrial applicability; citations and explanations supporting such statement
- [ ] Box No. VI Certain documents cited
- [ ] Box No. VII Certain defects in the international application
- [ ] Box No. VIII Certain observations on the international application

2. **FURTHER ACTION**

If a demand for international preliminary examination is made, this opinion will be considered to be a written opinion of the International Preliminary Examining Authority ("IPEA") except that this does not apply where the applicant chooses an Authority other than this one to be the IPEA and the chosen IPEA has notified the International Bureau under Rule 66.1*bis*(b) that written opinions of this International Searching Authority will not be so considered.

If this opinion is, as provided above, considered to be a written opinion of the IPEA, the applicant is invited to submit to the IPEA a written reply together, where appropriate, with amendments, before the expiration of 3 months from the date of mailing of Form PCT/ISA/220 or before the expiration of 22 months from the priority date, whichever expires later.

For further options, see Form PCT/ISA/220.

Name and mailing address of the ISA/US	Date of completion of this opinion	Authorized officer:
Mail Stop PCT, Attn: ISA/US Commissioner for Patents P.O. Box 1450, Alexandria, Virginia 22313-1450 Facsimile No. 571-273-3201	11 November 2013	Blaine R. Copenheaver PCT Helpdesk: 571-272-4300 PCT OSP: 571-272-7774

Form PCT/ISA/237 (cover sheet) (July 2011)

WRITTEN OPINION OF THE INTERNATIONAL SEARCHING AUTHORITY

International application No.
PCT/US2013/055298

Box No. I Basis of this opinion

1. With regard to the **language**, this opinion has been established on the basis of:
   - [X] the international application in the language in which it was filed.
   - [ ] a translation of the international application into _____ which is the language of a translation furnished for the purposes of international search (Rules 12.3(a) and 23.1(b)).

2. [ ] This opinion has been established taking into account the **rectification of an obvious mistake** authorized by or notified to this Authority under Rule 91 (Rule 43*bis*.1(a))

3. With regard to any **nucleotide and/or amino acid sequence** disclosed in the international application, this opinion has been established on the basis of a sequence listing filed or furnished:

   a. (means)
   - [ ] on paper
   - [ ] in electronic form

   b. (time)
   - [ ] in the international application as filed
   - [ ] together with the international application in electronic form
   - [ ] subsequently to this Authority for the purposes of search

4. [ ] In addition, in the case that more than one version or copy of a sequence listing has been filed or furnished, the required statements that the information in the subsequent or additional copies is identical to that in the application as filed or does not go beyond the application as filed, as appropriate, were furnished.

5. Additional comments:

WRITTEN OPINION OF THE INTERNATIONAL SEARCHING AUTHORITY

International application No.
PCT/US2013/055298

Box No. V **Reasoned statement under Rule 43*bis*.1(a)(i) with regard to novelty, inventive step or industrial applicability; citations and explanations supporting such statement**

1. Statement

Novelty (N)	Claims	1-20	YES
	Claims	None	NO
Inventive step (IS)	Claims	None	YES
	Claims	1-20	NO
Industrial applicability (IA)	Claims	1-20	YES
	Claims	None	NO

2. Citations and explanations:

Claims 1-20 lack an inventive step under PCT Article 33(3) as being obvious over Begeja et al., hereinafter referred to as Begeja in view of Epstein et al., hereinafter referred to as Epstein.

Regarding claims 1, 10, 19 Begeja discloses a method, comprising (a method for providing a personalized channel to a customer using a TV 236 and a set top box 332 to access broadcast channels over the network 230, abstract, fig.3, para 0041), a tangible, non-transitory computer readable medium having instructions stored thereon that, when executed by a processor, perform the method [claim 10] (fig.5 shows a processor element 502, a memory 504, [the memory includes instructions to be executed], para 0061, 0062)
a system, comprising: an intelligent television (TV) having a display and a tuner, wherein the tuner is configured to receive and convert broadcast content signals to be displayed by the display; an input device associated with the intelligent TV; a memory; and a microprocessor operable [claim 19] (a method for providing a personalized channel to a customer using a TV 236 and a set top box 332 to access broadcast channels over the network 230, and a remote control to allow the user to click on the desired programs, abstract, fig.3, para 0039, 0047; fig.5 shows a processor element 502, a memory 504, [the memory includes instructions to be executed], and includes input devices keyboard, mouse, para 0061, 0062):
detecting a first signal source change made at an intelligent television (TV) (fig.4 shows the step 450 wherein the method determines if the user provides a feedback, the feedback is a change of program, if the customer indicates changing to a movie program at step 450 then the result is "yes" and the method goes to step 410 then the users profile of interest is updated, para 0059, 0051; a customer using a TV 236 and a set top box 332 to access broadcast channels over the network 230 [TV accessing set top box and further a user is provided with an option provide feedback through the TV it is interpreted as intelligent television], fig.3, para 0041);
sending a first notification of the first signal source change detected to a live TV application (fig.4 shows at step 450 when a change is detected then the method proceeds to step 410 to update the user preferences in the users profile [updating the user profile upon a change of channel detection is interpreted as sending a first notification of the first signal source change], para 0059, 0051, 0052; a customer clicks through a plurality of channels quickly and further dwells on a particular channel for some time and further upon seeing a commercial clicks through a plurality of channels [interpreted as live TV application], para 0044), wherein the first notification includes first viewing information associated with the first signal source change (fig.4 shows at step 450 when a change is detected then the method proceeds to step 410 to update the user preferences in the users profile [updating the user preferences is interpreted as first viewing information associated], para 0059, 0051, 0052; fig.4 shows in step 430 the user profile is updated , if a viewer is watching a basketball game and the user is presented with an option of changing to another basketball games through the program guide, further the users feedback [first viewing information associated with the first signal source change] is determined if the user has changed to another channel, if yes this information is then used to update the users profile of interest, para 0055, 0056);
storing, in a memory associated with the intelligent TV, the first viewing information associated with the first signal source change (fig.3 shows a profile data base 350 [storing in a memory] at the service provider which stores users profile, para 0044; fig.4 shows in step 430 the user profile is updated , if a viewer is watching a basketball game and the user is presented with an option of changing to another basketball games through the program guide, further the users feedback [first viewing information associated with the first signal source change] is determined if the user has changed to another channel, if yes this information is then used to update the users profile of interest [the profile database 350 which includes the users profile is updated], para 0055, 0056);
and associating the first viewing information with a user of the intelligent TV (fig.4 shows in step 430 the user profile is updated , if a viewer is watching a basketball game and the user is presented with an option of changing to another basketball games through the program guide, further the users feedback is determined if the user has changed to another channel, if yes this information is then used to update the users profile of interest [updating the profile of a user based on the users feedback is interpreted as associating the first viewing information with a user], para 0055, 0056), but lacks the teaching of storing, in a memory associated with the intelligent TV, the first viewing information.
Epstein is in the field of a television widget running on a processor providing video images and identifying an operating state of the television (abstract) and teaches storing, in a memory associated with the intelligent TV, the information (fig.1 shows a TV 20 which includes a processor 72, a RAM 78, ROM 80 and a storage disc 92 for mass storage for storing large program files, para 0025; relevant videos are stored within the memory 82 or 90 in the television which are accessed, para 0037). It would have been obvious to one of ordinary skill in the art at the time of the invention to use the teachings of Epstein to incorporate storing, in a memory associated with the intelligent TV, the first viewing information into the invention of Begeja. The motivation would have been to provide a simple and less complex functionality mechanism for a television device to optimize user experience (see Epstein para 0020).

WRITTEN OPINION OF THE INTERNATIONAL SEARCHING AUTHORITY

International application No.
PCT/US2013/055298

Supplemental Box

In case **the space in any of the preceding boxes is not sufficient.**
Continuation of:

Regarding claims 2, 11, 20, Begeja further teaches wherein the first signal source change is made by the user (fig.4 shows the step 450 wherein the method determines if the user provides a feedback, the feedback is a change of program, if the customer indicates changing to a movie program at step 450 then the result is "yes" and the method goes to step 410 then the users profile of interest is updated, para 0059, 0051).

Regarding claims 3, 12, Begeja further teaches comprising: detecting a second signal source change made at the intelligent TV (a customer clicks through a plurality of channels and dwells for some time at a particular channel [first signal source change], and the again clicks through a plurality of channels quickly to another program channel [second signal source change], and the set top box gathers the information of the users viewing selections for each program channel for a period of time, para 0044; fig.4 shows the step 450 wherein the method determines if the user provides a feedback, the feedback is a change of program, if the customer indicates changing to a movie program at step 450 then the result is "yes" and the method goes to step 410 then the users profile of interest is updated, para 0059, 0051); sending a second notification of the second signal source change detected to the live TV application (fig.4 shows at step 450 when a change is detected then the method proceeds to step 410 to update the user preferences in the users profile [updating the user profile upon a change of channel detection is interpreted as sending a notification of the signal source change], para 0059, 0051, 0052; a customer clicks through a plurality of channels and dwells for some time at a particular channel [first signal source change], and the again clicks through a plurality of channels quickly to another program channel [second signal source change], and the set top box gathers the information of the users viewing selections [a second notification of the second signal source change] for each program channel for a period of time, para 0044), wherein the second notification includes second viewing information associated with the second signal source change (fig.4 shows at step 450 when a change is detected then the method proceeds to step 410 to update the user preferences in the users profile [updating the user preferences is interpreted as first viewing information associated], para 0059, 0051, 0052; a customer clicks through a plurality of channels and dwells for some time at a particular channel [first signal source change], and the again clicks through a plurality of channels quickly to another program channel [second signal source change], and the set top box gathers the information of the users viewing selections [second viewing information] for each program channel for a period of time, para 0044); storing, in the memory, the second viewing information associated with the second signal source change (a customer clicks through a plurality of channels and dwells for some time at a particular channel [first signal source change], and the again clicks through a plurality of channels quickly to another program channel [second signal source change], and the set top box gathers the information [storing, in the memory the second viewing] of the users viewing selections for each program channel for a period of time, para 0044;fig.3 shows a profile data base 350 [storing in a memory] at the service provider which stores users profile, para 0044; fig.4 shows in step 430 the user profile is updated , if a viewer is watching a basketball game and the user is presented with an option of changing to another basketball games through the program guide, para 0055, 0056); and associating the second viewing information with the user of the intelligent TV (a customer clicks through a plurality of channels and dwells for some time at a particular channel [first signal source change], and the again clicks through a plurality of channels quickly to another program channel [second signal source change], and the set top box gathers the information [storing, in the memory the second viewing] of the users viewing selections for each program channel for a period of time and is used to determine the users interest in variety of programs [interpreted as associating the second viewing information with the user], para 0044), but lacks the teaching of storing, in the memory associated with the intelligent TV.
Epstein is in the field of a television widget running on a processor providing video images and identifying an operating state of the television (abstract) and teaches storing, in a memory associated with the intelligent TV, the information (fig.1 shows a TV 20 which includes a processor 72, a RAM 78, ROM 80 and a storage disc 92 for mass storage for storing large program files, para 0025; relevant videos are stored within the memory 82 or 90 in the television which are accessed, para 0037). It would have been obvious to one of ordinary skill in the art at the time of the invention to use the teachings of Epstein to incorporate storing, in a memory associated with the intelligent TV, the first viewing information into the invention of Begeja. The motivation would have been to provide a simple and less complex functionality mechanism for a television device to optimize user experience (see Epstein para 0020).

Regarding claims 4, 13, Begeja further teaches comprising: comparing, via a processor associated with the intelligent TV, the stored first viewing information with the stored second viewing information (a customer clicks through a plurality of channels and dwells for some time at a particular channel [first signal source change], and the again clicks through a plurality of channels quickly to another program channel [second signal source change], and the set top box gathers the information [storing, in the memory the second viewing] of the users viewing selections for each program channel for a period of time, para 0044; fig.4 shows a method 400 which at step 430 is presented with another program channel of interest to the user which the user may select, in step 450 the users feedback is noted, a feedback check is made and if the feedback is a change which is "yes" i.e. change in the current channel to another channel then the personalized user preferences data is updated [the step 450 to determine the feedback includes a new channel/change is interpreted as comparing], para 0055, 0056, 0059); and determining, via the processor, at least one match between the first and second viewing information (fig.4 shows a method 400 which at step 430 is presented with another program channel of interest to the user which the user may select, in step 450 the users feedback is noted, a feedback check is made and if the feedback does not include a change which is "no" the process returns to step 460, further in step 450 the users feedback is noted, if the feedback is a change which is "yes" i.e. change in the current channel to another channel then the personalized user preferences data is updated [interpreted as a matching between first and second viewing information], para 0055, 0056, 0059).

Regarding claims 5, 14, Begeja further teaches comprising: determining, based at least partially on the determined at least one match, a user viewing behavior associated with the user (fig.4 shows a method 400 which at step 430 is presented with another program channel of interest to the user which the user may select, in step 450 the users feedback is noted, a feedback check is made and if the feedback does not include a change which is "no" the process returns to step 460, further in step 450 the users feedback is noted, if the feedback is a change which is "yes" i.e. change in the current channel to another channel then the personalized user preferences data is updated [interpreted as an user viewing behavior], para 0055, 0056, 0059).

WRITTEN OPINION OF THE INTERNATIONAL SEARCHING AUTHORITY

International application No.
PCT/US2013/055298

Supplemental Box

In case **the space in any of the preceding boxes is not sufficient.**
Continuation of:

Regarding claims 6, 15, Begeja further teaches wherein the at least one match is at least one of a time associated with the first and second signal source change, a channel associated with the first and second signal source change (fig.4 shows a method 400 which at step 430 is presented with another program channel of interest to the user which the user may select, in step 450 the users feedback is noted, a feedback check is made and if the feedback does not include a change which is "no" the process returns to step 460, further in step 450 the users feedback is noted, if the feedback is a change which is "yes" i.e. change in the current channel to another channel [channel associated with first and second signal source change] then the personalized user preferences data is updated, para 0055, 0056, 0059), TV content associated with the first and second signal source change, and a viewing time of the TV content associated with the first and second signal source.

Regarding claims 7, 16, Begeja further teaches wherein detecting the first signal source change further comprises: setting a listener associated with the live TV application of the intelligent TV (fig.4 shows a method 400 which at step 430 is presented with another program channel of interest to the user which the user may select, in step 450 the users feedback is noted, a feedback check [interpreted as setting a listener] is made and if the feedback does not include a change which is "no" the process returns to step 460, further in step 450 the users feedback is noted, if the feedback is a change which is "yes" i.e. change in the current channel to another channel then the personalized user preferences data is updated, para 0055, 0056, 0059; a customer clicks through a plurality of channels quickly and further dwells on a particular channel for some time and further upon seeing a commercial clicks through a plurality of channels [interpreted as live TV application], para 0044); monitoring, via the listener, an event associated with at least one signal source of the intelligent TV, wherein the event includes changing from a first signal source to a second signal source of the intelligent TV (fig.4 shows a method 400 which at step 430 is presented with another program channel of interest to the user which the user may select, in step 450 the users feedback is noted, a feedback check [interpreted as setting a listener] is made and if the feedback does not include a change which is "no" the process returns to step 460, further in step 450 the users feedback is noted, if the feedback is a change which is "yes" i.e. change in the current channel to another channel [changing from a first signal source to a second signal source] then the personalized user preferences data is updated, para 0055, 0056, 0059) and identifying, via the live TV application, an occurrence of the event associated with the at least one signal source of the intelligent TV (fig.4 shows a method 400 which at step 430 is presented with another program channel of interest to the user which the user may select, in step 450 the users feedback is noted, a feedback check [interpreted as setting a listener] is made and if the feedback does not include a change which is "no" the process returns to step 460, further in step 450 the users feedback is noted, if the feedback is a change which is "yes" [identifying an occurrence of the event] i.e. change in the current channel to another channel [changing from a first signal source to a second signal source] then the personalized user preferences data is updated, para 0055, 0056, 0059).

Regarding claims 8, 17, Begeja further teaches wherein the first signal source corresponds to a first live TV channel and the second signal source corresponds to a second live TV channel (a customer clicks through a plurality of channels and dwells for some time at a particular channel [first signal source change], and the again clicks through a plurality of channels quickly [interpreted as live TV channels] to another program channel [second signal source change], and the set top box gathers the information [storing, in the memory the second viewing] of the users viewing selections for each program channel for a period of time, para 0044) .

Regarding claims 9, 18, Begeja further teaches wherein the listener is set automatically via the live TV application (fig.4 shows a method 400 which at step 430 a viewer is watching a basketball game and is presented with another program channel of interest to the user which the user may select, in step 450 the users feedback is noted, a feedback check [interpreted as setting a listener] is made and if the feedback does not include a change which is "no" the process returns to step 460, further in step 450 the users feedback is noted, if the feedback is a change which is "yes" i.e. change in the current channel to another channel then the personalized user preferences data is updated [as the updating is performed based on the users feedback for the live channels it is interpreted as listener is set via the live TV application], para 0055, 0056, 0059).

Claims 1-20 meet the criteria set out in PCT Article 33(4), and thus have industrial applicability because the subject matter claimed can be made or used in industry.

PATENT COOPERATION TREATY

From the INTERNATIONAL SEARCHING AUTHORITY

To: Yiu F. Au
Sheridan Ross P.C.
1560 Broadway
Suite 1200
Denver, Colorado 80202
United States of America

PCT

NOTIFICATION OF TRANSMITTAL OF THE INTERNATIONAL SEARCH REPORT AND THE WRITTEN OPINION OF THE INTERNATIONAL SEARCHING AUTHORITY, OR THE DECLARATION

(PCT Rule 44.1)

Date of mailing *(day/month/year)*	20 DEC 2013
Applicant's or agent's file reference 6583-519-PCT	**FOR FURTHER ACTION** See paragraphs 1 and 4 below
International application No. PCT/US13/55567	International filing date *(day/month/year)* 19 August 2013 (19.08.2013)
Applicant Flextronics AP, LLC	

1. ☒ The applicant is hereby notified that the international search report and the written opinion of the International Searching Authority have been established and are transmitted herewith.

   Filing of amendments and statement under Article 19:
   The applicant is entitled, if he so wishes, to amend the claims of the international application (see Rule 46):

   When? The time limit for filing such amendments is normally two months from the date of transmittal of the international search report.

   Where? Directly to the International Bureau of WIPO, 34 chemin des Colombettes 1211 Geneva 20, Switzerland, Facsimile No.: +41 22 338 82 70

   For more detailed instructions, see *PCT Applicant's Guide*, International Phase, paragraphs 9.004 – 9.011.

2. ☐ The applicant is hereby notified that no international search report will be established and that the declaration under Article 17(2)(a) to that effect and the written opinion of the International Searching Authority are transmitted herewith.

3. ☐ **With regard to any protest** against payment of (an) additional fee(s) under Rule 40.2, the applicant is notified that:

   ☐ the protest together with the decision thereon has been transmitted to the International Bureau together with any request to forward the texts of both the protest and the decision thereon to the designated Offices.

   ☐ no decision has been made yet on the protest; the applicant will be notified as soon as a decision is made.

4. **Reminders**

   The applicant may submit comments on an informal basis on the written opinion of the International Searching Authority to the International Bureau. The International Bureau will send a copy of such comments to all designated Offices unless an international preliminary examination report has been or is to be established. Following the expiration of 30 months from the priority date, these comments will also be made available to the public.

   Shortly after the expiration of **18 months** from the priority date, the international application will be published by the International Bureau. If the applicant wishes to avoid or postpone publication, a notice of withdrawal of the international application, or of the priority claim, must reach the International Bureau before the completion of the technical preparations for international publication (Rules 90*bis*.1 and 90*bis*.3).

   Within **19 months** from the priority date, but only in respect of some designated Offices, a demand for international preliminary examination must be filed if the applicant wishes to postpone the entry into the national phase **until 30 months** from the priority date (in some Offices even later); otherwise, the applicant must, **within 20 months** from the priority date, perform the prescribed acts for entry into the national phase before those designated Offices.

   In respect of other designated Offices, the time limit of **30 months** (or later) will apply even if no demand is filed within 19 months.

   For details about the applicable time limits, Office by Office, see www.wipo.int/pct/en/texts/time_limits.html and the *PCT Applicant's Guide*, National Chapters.

Name and mailing address of the ISA/ Mail Stop PCT, Attn: ISA/US Commissioner for Patents P.O. Box 1450, Alexandria, Virginia 22313-1450 Facsimile No. 571-273-3201	Authorized officer Shane Thomas PCT Helpdesk: 571-272-4300 Telephone No. PCT OSP: 571-272-7774

Form PCT/ISA/220 (July 2010)

PATENT COOPERATION TREATY

PCT

INTERNATIONAL SEARCH REPORT

(PCT Article 18 and Rules 43 and 44)

Applicant's or agent's file reference 6583-519-PCT	**FOR FURTHER ACTION**	see Form PCT/ISA/220 as well as, where applicable, item 5 below.
International application No. PCT/US13/55567	International filing date *(day/month/year)* 19 August 2013 (19.08.2013)	(Earliest) Priority Date *(day/month/year)* 17 August 2012 (17.08.2012)
Applicant FLEXTRONICS AP, LLC		

This international search report has been prepared by this International Searching Authority and is transmitted to the applicant according to Article 18. A copy is being transmitted to the International Bureau.

This international search report consists of a total of 2 sheets.

☐ It is also accompanied by a copy of each prior art document cited in this report.

1. **Basis of the report**
   a. With regard to the **language**, the international search was carried out on the basis of:
      ☒ the international application in the language in which it was filed.
      ☐ a translation of the international application into _____ which is the language of a translation furnished for the purposes of international search (Rules 12.3(a) and 23.1(b)).
   b. ☐ This international search report has been established taking into account the **rectification of an obvious mistake** authorized by or notified to this Authority under Rule 91 (Rule 43.6*bis*(a)).
   c. ☐ With regard to any **nucleotide and/or amino acid sequence** disclosed in the international application, see Box No. I.

2. ☐ **Certain claims were found unsearchable** (see Box No. II).

3. ☐ **Unity of invention is lacking** (see Box No. III).

4. With regard to the **title**,
   ☒ the text is approved as submitted by the applicant.
   ☐ the text has been established by this Authority to read as follows:

5. With regard to the **abstract**,
   ☒ the text is approved as submitted by the applicant.
   ☐ the text has been established, according to Rule 38.2, by this Authority as it appears in Box No. IV. The applicant may, within one month from the date of mailing of this international search report, submit comments to this Authority.

6. With regard to the **drawings**,
   a. the figure of the **drawings** to be published with the abstract is Figure No. 15
      ☒ as suggested by the applicant.
      ☐ as selected by this Authority, because the applicant failed to suggest a figure.
      ☐ as selected by this Authority, because this figure better characterizes the invention.
   b. ☐ none of the figures is to be published with the abstract.

INTERNATIONAL SEARCH REPORT PCT/US2013/055567 20.12.2013

International application No.
PCT/US13/55567

A. CLASSIFICATION OF SUBJECT MATTER
IPC(8) - G06F 3/00, 13/00; H04N 5/445, 7/14 (2013.01)
USPC - 725/037, 39; 348/14.07
According to International Patent Classification (IPC) or to both national classification and IPC

B. FIELDS SEARCHED

Minimum documentation searched (classification system followed by classification symbols)
IPC(8):G06T 15/00; G06F 3/00, 13/00; H04N 5/445, 7/14 (2013.01); USPC: 345/419; 725/037, 39; 348/14.03, 14.07

Documentation searched other than minimum documentation to the extent that such documents are included in the fields searched

Electronic data base consulted during the international search (name of data base and, where practicable, search terms used)
MicroPatent (US-G, US-A, EP-A, EP-B, WO, JP-bib, DE-C,B, DE-A, DE-T, DE-U, GB-A, FR-A); ProQuest/DialogPro (Derwent, INSPEC, NTIS, PASCAL, Current Contents Search, Dissertation Abstracts Online, Inside Conferences); IP.com; Google Scholar; intelligent, tv, television, smart, panel, display, detect, location, transparent, opaque, overlay, background, menu, electronic, program, guide, EPG, plugin, source, application

C. DOCUMENTS CONSIDERED TO BE RELEVANT

Category*	Citation of document, with indication, where appropriate, of the relevant passages	Relevant to claim No.
X	US 2011/0276995 A1 (ALTEN, J et al.) November 10, 2011, paragraph [0022], paragraph [0099], paragraph [0084], paragraph [0081]	1-20
A	US 2006/0117337 A1 (SHIVAJI RAO, V et al.) June 1, 2006, entire document	1, 8 and 14
A	US 2012/0210355 A1 (KIM, U et al.) August 16, 2012, entire document	1, 8 and 14

☐ Further documents are listed in the continuation of Box C. ☐

* Special categories of cited documents:
"A" document defining the general state of the art which is not considered to be of particular relevance
"E" earlier application or patent but published on or after the international filing date
"L" document which may throw doubts on priority claim(s) or which is cited to establish the publication date of another citation or other special reason (as specified)
"O" document referring to an oral disclosure, use, exhibition or other means
"P" document published prior to the international filing date but later than the priority date claimed
"T" later document published after the international filing date or priority date and not in conflict with the application but cited to understand the principle or theory underlying the invention
"X" document of particular relevance; the claimed invention cannot be considered novel or cannot be considered to involve an inventive step when the document is taken alone
"Y" document of particular relevance; the claimed invention cannot be considered to involve an inventive step when the document is combined with one or more other such documents, such combination being obvious to a person skilled in the art
"&" document member of the same patent family

Date of the actual completion of the international search	Date of mailing of the international search report
2 November 2013 (02.11.2013)	20 DEC 2013
Name and mailing address of the ISA/US Mail Stop PCT, Attn: ISA/US, Commissioner for Patents P.O. Box 1450, Alexandria, Virginia 22313-1450 Facsimile No. 571-273-3201	Authorized officer: Shane Thomas PCT Helpdesk: 571-272-4300 PCT OSP: 571-272-7774

From the
INTERNATIONAL SEARCHING AUTHORITY

To: Yiu F. Au
Sheridan Ross P.C.
1560 Broadway
Suite 1200
Denver, Colorado 80202
United States of America

PCT

WRITTEN OPINION OF THE
INTERNATIONAL SEARCHING AUTHORITY

(PCT Rule 43*bis*.1)

Date of mailing *(day/month/year)* 20 DEC 2013

Applicant's or agent's file reference
6583-519-PCT

FOR FURTHER ACTION
See paragraph 2 below

International application No.	International filing date *(day/month/year)*	Priority date *(day/month/year)*
PCT/US13/55567	19 August 2013 (19.08.2013)	17 August 2012 (17.08.2012)

International Patent Classification (IPC) or both national classification and IPC
IPC(8) - G06F 3/00, 13/00; H04N 5/445, 7/14 (2013.01)
USPC - 725/037, 39; 348/14.07

Applicant FLEXTRONICS AP, LLC

1. This opinion contains indications relating to the following items:

- [x] Box No. I Basis of the opinion
- [ ] Box No. II Priority
- [ ] Box No. III Non-establishment of opinion with regard to novelty, inventive step and industrial applicability
- [ ] Box No. IV Lack of unity of invention
- [x] Box No. V Reasoned statement under Rule 43*bis*.1(a)(i) with regard to novelty, inventive step or industrial applicability; citations and explanations supporting such statement
- [ ] Box No. VI Certain documents cited
- [x] Box No. VII Certain defects in the international application
- [x] Box No. VIII Certain observations on the international application

2. **FURTHER ACTION**

If a demand for international preliminary examination is made, this opinion will be considered to be a written opinion of the International Preliminary Examining Authority ("IPEA") except that this does not apply where the applicant chooses an Authority other than this one to be the IPEA and the chosen IPEA has notified the International Bureau under Rule 66.1 *bis*(b) that written opinions of this International Searching Authority will not be so considered.

If this opinion is, as provided above, considered to be a written opinion of the IPEA, the applicant is invited to submit to the IPEA a written reply together, where appropriate, with amendments, before the expiration of 3 months from the date of mailing of Fom PCT/ISA/220 or before the expiration of 22 months from the priority date, whichever expires later.

For further options, see Form PCT/ISA/220.

Name and mailing address of the ISA/US	Date of completion of this opinion	Authorized officer:
Mail Stop PCT, Attn: ISA/US Commissioner for Patents P.O. Box 1450, Alexandria, Virginia 22313-1450 Facsimile No. 571-273-3201	2 November 2013 (02.11.2013)	Shane Thomas PCT Helpdesk: 571-272-4300 PCT OSP: 571-272-7774

Form PCT/ISA/237 (cover sheet) (July 2011)

WRITTEN OPINION OF THE INTERNATIONAL SEARCHING AUTHORITY

International application No.
PCT/US13/55567

Box No. I Basis of this opinion

1. With regard to the **language**, this opinion has been established on the basis of:
   - [X] the international application in the language in which it was filed.
   - [ ] a translation of the international application into _____ which is the language of a translation furnished for the purposes of international search (Rules 12.3(a) and 23.1(b)).

2. [ ] This opinion has been established taking into account the **rectification of an obvious mistake** authorized by or notified to this Authority under Rule 91 (Rule 43*bis*.1(a))

3. With regard to any **nucleotide and/or amino acid sequence** disclosed in the international application, this opinion has been established on the basis of a sequence listing filed or furnished:

   a. (means)
   - [ ] on paper
   - [ ] in electronic form

   b. (time)
   - [ ] in the international application as filed
   - [ ] together with the international application in electronic form
   - [ ] subsequently to this Authority for the purposes of search

4. [ ] In addition, in the case that more than one version or copy of a sequence listing has been filed or furnished, the required statements that the information in the subsequent or additional copies is identical to that in the application as filed or does not go beyond the application as filed, as appropriate, were furnished.

5. Additional comments:

WRITTEN OPINION OF THE INTERNATIONAL SEARCHING AUTHORITY

International application No.
PCT/US13/55567

Box No. V **Reasoned statement under Rule 43*bis*.1(a)(i) with regard to novelty, inventive step or industrial applicability; citations and explanations supporting such statement**

1. Statement

Novelty (N)	Claims	NONE	YES
	Claims	1-20	NO
Inventive step (IS)	Claims	NONE	YES
	Claims	1-20	NO
Industrial applicability (IA)	Claims	1-20	YES
	Claims	NONE	NO

2. Citations and explanations:

Claims 1-20 lack novelty under PCT Article 33(2) as being anticipated by US 2011/0276995 A1 to Alten et al. (hereinafter 'Alten').

As to claim 1, Alten discloses an EPG data service (electronic program guide to operate as a shell or window to provide the user with the capability to access other applications, paragraph [0022]) for an Intelligent TV (television receiver 27), comprising: a plurality of source plugins configured to receive EPG information from a plurality of respective EPG information sources (the electronic program guide (EPG) to operate as a shell or window to provide the user with the capability to access other applications (plugins) or information systems (information sources) which are not part of the electronic program guide application or data, paragraph [0022]); an EPG subservice configured to aggregate the EPG information received by the plurality of source plugins (Each of these keys indicates to the program schedule system a distinct user-created "Channel Preference" or "Favorite Channel" list, which is a listing of a specific subset (EPG subservice) of channels for a particular user, arranged in the sequential order that the user wishes to view during operation of the program schedule system, paragraph [0099]); an EPG database configured to store the aggregated EPG information from the EPG subservice (electronic program guide (EPG) application software updates, is stored in a read only memory (ROM) 17. The microcontroller 16 uses the received program schedule information to build a database (EPG database) by storing the data in appropriately organized records (aggregated EPG information), paragraph [0084]); and an EPG provider configured to provide a relevant portion of the aggregated EPG information to an application of the Intelligent TV (The data provider is a program information provider, the satellite uplink manager, a local cable operator, or a combination of these sources, and the data stream contains program schedule information for all television programs and other services available, paragraph [0081]).

As to claim 2, Alten discloses the EPG data service of claim 1, wherein the EPG database is configured to store the aggregated EPG information relevant to programs within a pre-defined time interval (The microcontroller 16 uses the received program schedule information to build a database by storing the data in appropriately organized records in dynamic random access memory (DRAM) 18. The stored schedule information can be updated on a periodic basis, such as hourly, daily or weekly, or at any time when changes in scheduling or other factors warrant an update, paragraph [0084]).

As to claim 3, Alten discloses the EPG data service of claim 1, wherein the aggregated EPG information comprises data fields that includes one or more of an identifier, a name description, a start date and/or time, and a duration (The schedule information presented includes the name of the program and program start/stop time, paragraph [0113]).

As to claim 4, Alten discloses the EPG data service of claim 1, further comprising a tag subservice configured to receive notification from a second application of the Intelligent TV to set or unset tags for programs or channels, store the tag in a database, and serve the EPG subservice with information regarding tagged programs or channels (The REMINDER message 130 (notification) queries the user as to whether the system should remind the user, at a predetermined time before the start of the selected program (tagged program), that he or she would like to view the selected program, as shown in FIG. 13. If the user responds affirmatively, the microcontroller 16 stores reminder data consisting of at least the channel, time and day of the selected program in a reminder buffer, which contains similar schedule information for all programs for which the user has set a reminder, paragraph [0115]).

As to claim 5, Alten discloses the EPG data service of claim 4, wherein, on startup of the Intelligent TV, the tag subservice is configured to reschedule alarms in an alarm manager of the Intelligent TV for programs or channels tagged as a reminder, wherein the alarm manager is configured to notify the tag subservice when a time for a scheduled reminder is reached, and wherein the tag subservice is configured to notify the second application regarding the scheduled reminder (The REMINDER message 130 (notification/alarm) queries the user as to whether the system should remind the user, at a predetermined time (time for a scheduled reminder) before the start of the selected program (tagged program), that he or she would like to view the selected program, as shown in FIG. 13. If the user responds affirmatively, the microcontroller 16 stores reminder data consisting of at least the channel, time and day of the selected program in a reminder buffer, which contains similar schedule information for all programs for which the user has set a reminder, paragraph [0115]).

As to claim 6, Alten discloses the EPG data service of claim 1, further comprising a thumbnail cache manager configured to store thumbnails in a database and serve the thumbnails to the application (All Listings icon (thumbnail) in the top horizontal bar 61 of FIG. 6 identifies a "Category Listing" mode in which program schedule information is displayed and categorized by program content, as shown in FIG. 19. The particular listing shown in FIG. 19 includes the categories of Movies, Sports, News and Children 190A-190D. The database record stored for each listing contains a content-specific identifier (icon/thumbnail) so the microcontroller can search the database and categorize the information by content for purposes of displaying it in the Category Listing mode, paragraph [0125]).

-***-Continued Within the Next Supplemental Box-***-

WRITTEN OPINION OF THE
INTERNATIONAL SEARCHING AUTHORITY

International application No.
PCT/US13/55567

Box No. VII Certain defects in the international application

The following defects in the form or contents of the international application have been noted:
Claims 8, 12, and 18 contain the following defects in the form or contents thereof:

Claim 8, line 2, change "Intelligenttelevision" to "Intelligent Television".

Claim 12, line 2, delete "a".

Claim 18, line 3, delete "a".

WRITTEN OPINION OF THE INTERNATIONAL SEARCHING AUTHORITY

International application No.
PCT/US13/55567

Box No. VIII Certain observations on the international application

The following observations on the clarity of the claims, description, and drawings or on the question whether the claims are fully supported by the description, are made:

Claim 4, 11-12, and 17 are objected to under PCT Article 6 as lacking clarity, because claim 4, 11-12, and 17 are indefinite for the following reason(s):

Claims 4, 11, and 17, lines 3, 3, and 5 respectively, "the tag" lacks antecedent basis. It is unclear which tag of the previously recited "tags" is intended.

Claim 12, lines 3-4, "the tag subservice" lacks antecedent basis.

WRITTEN OPINION OF THE INTERNATIONAL SEARCHING AUTHORITY

International application No.
PCT/US13/55567

Supplemental Box

In case **the space in any of the preceding boxes is not sufficient.**
Continuation of:

-***-Continued from Box V: Citations and Explanations-***-

As to claim 7, Alten discloses the EPG data service of claim 6, wherein the EPG subservice is configured to serve to the application a uniform resource identifier (URI) for each thumbnail in the aggregated EPG information, and wherein the thumbnail cache manager is configured to serve a thumbnail to the application based on the URI (The particular listing shown in FIG. 19 includes the categories of Movies, Sports, News and Children 190A-190D (EPG subservice). The database record stored for each listing contains a content-specific identifier so the microcontroller can search the database and categorize the information by content for purposes of displaying it in the Category Listing mode, paragraph [0125]).

As to claim 8, Alten discloses a method of managing Electronic Programming Guide (EPG) information (electronic program guide to operate as a shell or window to provide the user with the capability to access other applications, paragraph [0022]) for an Intelligent television (TV) (television receiver 27), comprising: receiving EPG information from a plurality of EPG sources (the electronic program guide (EPG) to operate as a shell or window to provide the user with the capability to access other applications or information systems (information sources) which are not part of the electronic program guide application or data, paragraph [0022]); aggregating the EPG information from the plurality of EPG sources (Each of these keys indicates to the program schedule system a distinct user-created "Channel Preference" or "Favorite Channel" list, which is a listing of a specific subset (EPG subservice) of channels for a particular user, arranged in the sequential order that the user wishes to view during operation of the program schedule system, paragraph [0099]); storing the aggregated EPG information in a database (electronic program guide (EPG) application software updates, is stored in a read only memory (ROM) 17. The microcontroller 16 uses the received program schedule information to build a database (EPG database) by storing the data in appropriately organized records (aggregated EPG information), paragraph [0084]); and providing a relevant portion of the aggregated EPG information to an application of the Intelligent TV (The data provider is a program information provider, the satellite uplink manager, a local cable operator, or a combination of these sources, and the data stream contains program schedule information for all television programs and other services available, paragraph [0081]).

As to claim 9, Alten discloses the method of claim 8, wherein the storing step comprises storing the aggregated EPG information relevant to programs within a pre-defined time interval (The microcontroller 16 uses the received program schedule information to build a database by storing the data in appropriately organized records in dynamic random access memory (DRAM) 18. The stored schedule information can be updated on a periodic basis, such as hourly, daily or weekly, or at any time when changes in scheduling or other factors warrant an update, paragraph [0084]).

As to claim 10, Alten discloses the method of claim 8, the aggregated EPG information comprises data fields that include one or more of an identifier, a name description, a start date and/or time, and a duration (The schedule information presented includes the name of the program and program start/stop time, paragraph [0113]).

As to claim 11, Alten discloses the method of claim 8, further comprising receiving notification from a second application of the Intelligent TV to set or unset tags for programs or channels, storing the tag in a second database, and retrieving EPG information from the database based on information regarding tagged programs or channels (The REMINDER message 130 (notification/alarm) queries the user as to whether the system should remind the user, at a predetermined time (time for a scheduled reminder) before the start of the selected program (tagged program), that he or she would like to view the selected program, as shown in FIG. 13. If the user responds affirmatively, the microcontroller 16 stores reminder data consisting of at least the channel, time and day of the selected program in a reminder buffer, which contains similar schedule information for all programs for which the user has set a reminder, paragraph [0115]).

As to claim 12, Alten discloses the method of claim 11, further comprising, on a startup of the Intelligent TV, rescheduling alarms in an alarm manager of the Intelligent TV for programs or channels tagged as a reminder, wherein the alarm manager is configured to notify the tag subservice when a time for a scheduled reminder is reached; and notifying the second application regarding the scheduled reminder (The REMINDER message 130 (notification/alarm) queries the user as to whether the system should remind the user, at a predetermined time (time for a scheduled reminder) before the start of the selected program (tagged program), that he or she would like to view the selected program, as shown in FIG. 13. If the user responds affirmatively, the microcontroller 16 stores reminder data consisting of at least the channel, time and day of the selected program in a reminder buffer, which contains similar schedule information for all programs for which the user has set a reminder, paragraph [0115]).

As to claim 13, Alten discloses the method of claim 8, further comprising serving to the application a uniform resource identifier (URI) for each thumbnail in the aggregated EPG information; and serving a thumbnail to the application based on the URI (The particular listing shown in FIG. 19 includes the categories of Movies, Sports, News and Children 190A-190D (EPG subservice). The database record stored for each listing contains a content-specific identifier so the microcontroller can search the database and categorize the information by content for purposes of displaying it in the Category Listing mode, paragraph [0125]).

-***-Continued Within the Next Supplemental Box-***-

WRITTEN OPINION OF THE INTERNATIONAL SEARCHING AUTHORITY

International application No.
PCT/US13/55567

Supplemental Box

In case **the space in any of the preceding boxes is not sufficient.**
Continuation of:
-***-Continued from Previous Supplemental Box-***-

As to claim 14, Alten discloses an Intelligent TV comprising an application configured to display EPG information on the Intelligent TV and an EPG data service, the EPG data service comprising (the television receiver or display (intelligent TV) of schedule information in any of the operating modes of the electronic program guide (EPG), paragraph [0171]): a plurality of source plugins configured to receive EPG information from a plurality of respective EPG information sources (the electronic program guide (EPG) to operate as a shell or window to provide the user with the capability to access other applications (plugins) or information systems (information sources) which are not part of the electronic program guide application or data, paragraph [0022]); an EPG subservice configured to aggregate the EPG information received by the plurality of source plugins (Each of these keys indicates to the program schedule system a distinct user-created "Channel Preference" or "Favorite Channel" list, which is a listing of a specific subset (EPG subservice) of channels for a particular user, arranged in the sequential order that the user wishes to view during operation of the program schedule system, paragraph [0099]); an EPG database configured to store the aggregated EPG information from the EPG subservice (electronic program guide (EPG) application software updates, is stored in a read only memory (ROM) 17. The microcontroller 16 uses the received program schedule information to build a database (EPG database) by storing the data in appropriately organized records (aggregated EPG information), paragraph [0084]); and an EPG provider configured to provide a relevant portion of the aggregated EPG information to the application (The data provider is a program information provider, the satellite uplink manager, a local cable operator, or a combination of these sources, and the data stream contains program schedule information for all television programs and other services available, paragraph [0081]).

As to claim 15, Alten discloses the Intelligent TV of claim 14, wherein the EPG database is configured to store the aggregated EPG information relevant to programs within a pre-defined time interval (The microcontroller 16 uses the received program schedule information to build a database by storing the data in appropriately organized records in dynamic random access memory (DRAM) 18. The stored schedule information can be updated on a periodic basis, such as hourly, daily or weekly, or at any time when changes in scheduling or other factors warrant an update, paragraph [0084]).

As to claim 16, Alten discloses the Intelligent TV of claim 14, wherein the aggregated EPG information comprises data fields that includes one or more of an identifier, a name description, a start date and/or time, and a duration (The schedule information presented includes the name of the program and program start/stop time, paragraph [0113]).

As to claim 17, Alten discloses the Intelligent TV of claim 14, further comprising a second application configured to output and receive user input regarding tags for programs and channels, wherein the EPG data service further comprises a tag subservice configured to receive notification from the second application to set or unset tags for programs or channels, store the tag in a database, and serve the EPG subservice with information regarding tagged programs or channels (The REMINDER message 130 (notification) queries the user as to whether the system should remind the user, at a predetermined time before the start of the selected program (tagged program), that he or she would like to view the selected program, as shown in FIG. 13. If the user responds affirmatively, the microcontroller 16 stores reminder data consisting of at least the channel, time and day of the selected program in a reminder buffer, which contains similar schedule information for all programs for which the user has set a reminder, paragraph [0115]).

As to claim 18, Alten discloses the Intelligent TV of claim 17, further comprising an alarm manager, wherein, on startup of the Intelligent TV, the tag subservice is configured to reschedule alarms in an alarm manager of the Intelligent TV for programs or channels tagged as a reminder, wherein the alarm manager is configured to notify the tag subservice when a time for a scheduled reminder is reached, and wherein the tag subservice is configured to notify the second application regarding the scheduled reminder (The REMINDER message 130 (notification/alarm) queries the user as to whether the system should remind the user, at a predetermined time (time for a scheduled reminder) before the start of the selected program (tagged program), that he or she would like to view the selected program, as shown in FIG. 13. If the user responds affirmatively, the microcontroller 16 stores reminder data consisting of at least the channel, time and day of the selected program in a reminder buffer, which contains similar schedule information for all programs for which the user has set a reminder, paragraph [0115]).

As to claim 19, Alten discloses the Intelligent TV of claim 14, wherein the EPG data service further comprises a thumbnail cache manager configured to store thumbnails in a database and serve the thumbnails to the application (All Listings icon (thumbnail) in the top horizontal bar 61 of FIG. 6 identifies a "Category Listing" mode in which program schedule information is displayed and categorized by program content, as shown in FIG. 19. The particular listing shown in FIG. 19 includes the categories of Movies, Sports, News and Children 190A-190D. The database record stored for each listing contains a content-specific identifier (icon/thumbnail) so the microcontroller can search the database and categorize the information by content for purposes of displaying it in the Category Listing mode, paragraph [0125]).

As to claim 20, Alten discloses the Intelligent TV of claim 19, wherein the EPG subservice is configured to serve to the application a uniform resource identifier (URI) for each thumbnail in the aggregated EPG information, and wherein the thumbnail cache manager is configured to serve a thumbnail to the application based on the URI (The particular listing shown in FIG. 19 includes the categories of Movies, Sports, News and Children 190A-190D (EPG subservice). The database record stored for each listing contains a content-specific identifier so the microcontroller can search the database and categorize the information by content for purposes of displaying it in the Category Listing mode, paragraph [0125]).

Claims 1-20 have industrial applicability as defined by PCT Article 33(4) because the subject matter can be made or used in industry.

PATENT COOPERATION TREATY

From the INTERNATIONAL SEARCHING AUTHORITY

To: Yiu F. Au
Sheridan Ross P.C.
1560 Broadway
Suite 1200
Denver, Colorado 80202
United States of America

PCT

NOTIFICATION OF TRANSMITTAL OF THE INTERNATIONAL SEARCH REPORT AND THE WRITTEN OPINION OF THE INTERNATIONAL SEARCHING AUTHORITY, OR THE DECLARATION

(PCT Rule 44.1)

	Date of mailing *(day/month/year)* 22 NOV 2013
Applicant's or agent's file reference 6583-520-PCT	**FOR FURTHER ACTION** See paragraphs 1 and 4 below
International application No. PCT/US13/55570	International filing date *(day/month/year)* 19 August 2013 (19.08.2013)
Applicant Flextronics AP, LLC	

1. ☒ The applicant is hereby notified that the international search report and the written opinion of the International Searching Authority have been established and are transmitted herewith.

   Filing of amendments and statement under Article 19:
   The applicant is entitled, if he so wishes, to amend the claims of the international application (see Rule 46):

   When? The time limit for filing such amendments is normally two months from the date of transmittal of the international search report.

   Where? Directly to the International Bureau of WIPO, 34 chemin des Colombettes, 1211 Geneva 20, Switzerland, Facsimile No.: +41 22 338 82 70

   For more detailed instructions, see *PCT Applicant's Guide*, International Phase, paragraphs 9.004 – 9.011.

2. ☐ The applicant is hereby notified that no international search report will be established and that the declaration under Article 17(2)(a) to that effect and the written opinion of the International Searching Authority are transmitted herewith.

3. ☐ **With regard to any protest** against payment of (an) additional fee(s) under Rule 40.2, the applicant is notified that:

   ☐ the protest together with the decision thereon has been transmitted to the International Bureau together with any request to forward the texts of both the protest and the decision thereon to the designated Offices.

   ☐ no decision has been made yet on the protest; the applicant will be notified as soon as a decision is made.

4. **Reminders**

   The applicant may submit comments on an informal basis on the written opinion of the International Searching Authority to the International Bureau. The International Bureau will send a copy of such comments to all designated Offices unless an international preliminary examination report has been or is to be established. Following the expiration of 30 months from the priority date, these comments will also be made available to the public.

   Shortly after the expiration of **18 months** from the priority date, the international application will be published by the International Bureau. If the applicant wishes to avoid or postpone publication, a notice of withdrawal of the international application, or of the priority claim, must reach the International Bureau before the completion of the technical preparations for international publication (Rules 90*bis*.1 and 90*bis*.3).

   Within **19 months** from the priority date, but only in respect of some designated Offices, a demand for international preliminary examination must be filed if the applicant wishes to postpone the entry into the national phase **until 30 months** from the priority date (in some Offices even later); otherwise, the applicant must, **within 20 months** from the priority date, perform the prescribed acts for entry into the national phase before those designated Offices.

   In respect of other designated Offices, the time limit of **30 months** (or later) will apply even if no demand is filed within 19 months.

   For details about the applicable time limits, Office by Office, see www.wipo.int/pct/en/texts/time_limits.html and the *PCT Applicant's Guide*, National Chapters.

Name and mailing address of the ISA/ Mail Stop PCT, Attn: ISA/US Commissioner for Patents P.O. Box 1450, Alexandria, Virginia 22313-1450 Facsimile No. 571-273-3201	Authorized officer Shane Thomas PCT Helpdesk: 571-272-4300 Telephone No. PCT OSP: 571-272-7774

Form PCT/ISA/220 (July 2010)

PATENT COOPERATION TREATY

PCT

INTERNATIONAL SEARCH REPORT

(PCT Article 18 and Rules 43 and 44)

Applicant's or agent's file reference 6583-520-PCT	FOR FURTHER ACTION	see Form PCT/ISA/220 as well as, where applicable, item 5 below.
International application No. PCT/US13/55570	International filing date *(day/month/year)* 19 August 2013 (19.08.2013)	(Earliest) Priority Date *(day/month/year)* 17 August 2012 (17.08.2012)
Applicant Flextronics AP, LLC		

This international search report has been prepared by this International Searching Authority and is transmitted to the applicant according to Article 18. A copy is being transmitted to the International Bureau.

This international search report consists of a total of 2 sheets.

☐ It is also accompanied by a copy of each prior art document cited in this report.

1. **Basis of the report**
   a. With regard to the **language**, the international search was carried out on the basis of:
      ☒ the international application in the language in which it was filed.
      ☐ a translation of the international application into _____ which is the language of a translation furnished for the purposes of international search (Rules 12.3(a) and 23.1(b)).
   b. ☐ This international search report has been established taking into account the **rectification of an obvious mistake** authorized by or notified to this Authority under Rule 91 (Rule 43.6*bis*(a)).
   c. ☐ With regard to any **nucleotide and/or amino acid sequence** disclosed in the international application, see Box No. I.

2. ☐ **Certain claims were found unsearchable** (see Box No. II).

3. ☐ **Unity of invention is lacking** (see Box No. III).

4. With regard to the **title**,
   ☒ the text is approved as submitted by the applicant.
   ☐ the text has been established by this Authority to read as follows:

5. With regard to the **abstract**,
   ☒ the text is approved as submitted by the applicant.
   ☐ the text has been established, according to Rule 38.2, by this Authority as it appears in Box No. IV. The applicant may, within one month from the date of mailing of this international search report, submit comments to this Authority.

6. With regard to the **drawings**,
   a. the figure of the **drawings** to be published with the abstract is Figure No. 17
      ☒ as suggested by the applicant.
      ☐ as selected by this Authority, because the applicant failed to suggest a figure.
      ☐ as selected by this Authority, because this figure better characterizes the invention.
   b. ☐ none of the figures is to be published with the abstract.

Form PCT/ISA/210 (first sheet) (July 2009)

INTERNATIONAL SEARCH REPORT

International application No.
PCT/US13/55570

A. CLASSIFICATION OF SUBJECT MATTER
IPC(8) - G06F 3/00, 13/00; H04N 5/445, 7/14 (2013.01)
USPC - 725/037, 39, 40; 348/14.07
According to International Patent Classification (IPC) or to both national classification and IPC

B. FIELDS SEARCHED

Minimum documentation searched (classification system followed by classification symbols)
IPC(8): G06T 15/00; G06F 3/00, 13/00; H04N 5/445, 7/14 (2013.01); USPC: 345/419; 725/037, 39, 40; 348/14.03, 14.07

Documentation searched other than minimum documentation to the extent that such documents are included in the fields searched

Electronic data base consulted during the international search (name of data base and, where practicable, search terms used)
MicroPatent (US-G, US-A, EP-A, EP-B, WO, JP-bib, DE-C,B, DE-A, DE-T, DE-U, GB-A, FR-A); ProQuest/DialogPro (Derwent, INSPEC, NTIS, PASCAL, Current Contents Search, Dissertation Abstracts Online, Inside Conferences); IP.com; Google Scholar; intelligent, tv, television, smart, panel, display, detect, location, transparent, opaque, overlay, background, menu, electronic, program, guide, EPG, plugin, source, application, tag, favorite, shows, screen, channel

C. DOCUMENTS CONSIDERED TO BE RELEVANT

Category*	Citation of document, with indication, where appropriate, of the relevant passages	Relevant to claim No.
X	US 7174126 B2 (MCELHATTEN, D et al.) February 6, 2007, Figure 23, Figure 31, Figure 24, column 16, lines 30-32, column 14, lines 7-8, column 32, lines 42-43, column 26, line 64 through column 27, line 4, column 17, lines 3-10	1-20
A	US 2011/0276995 A1 (ALTEN, J et al.) November 10, 2011, Figure 11, paragraph [0029], paragraph [0099], paragraph [0110], paragraph [0099], paragraph [0024]	1, 10 and 11
A	US 2006/0117337 A1 (SHIVAJI RAO, V et al.) June 1, 2006, entire document	1, 10 and 11
A	US 2012/0210355 A1 (KIM, U et al.) August 16, 2012, entire document	1, 10 and 11

☐ Further documents are listed in the continuation of Box C. ☐

* Special categories of cited documents:
"A" document defining the general state of the art which is not considered to be of particular relevance
"E" earlier application or patent but published on or after the international filing date
"L" document which may throw doubts on priority claim(s) or which is cited to establish the publication date of another citation or other special reason (as specified)
"O" document referring to an oral disclosure, use, exhibition or other means
"P" document published prior to the international filing date but later than the priority date claimed
"T" later document published after the international filing date or priority date and not in conflict with the application but cited to understand the principle or theory underlying the invention
"X" document of particular relevance; the claimed invention cannot be considered novel or cannot be considered to involve an inventive step when the document is taken alone
"Y" document of particular relevance; the claimed invention cannot be considered to involve an inventive step when the document is combined with one or more other such documents, such combination being obvious to a person skilled in the art
"&" document member of the same patent family

Date of the actual completion of the international search	Date of mailing of the international search report
11 November 2013 (11.11.2013)	22 NOV 2013
Name and mailing address of the ISA/US Mail Stop PCT, Attn: ISA/US, Commissioner for Patents P.O. Box 1450, Alexandria, Virginia 22313-1450 Facsimile No. 571-273-3201	Authorized officer: Shane Thomas PCT Helpdesk: 571-272-4300 PCT OSP: 571-272-7774

Form PCT/ISA/210 (second sheet) (July 2009)

PATENT COOPERATION TREATY

From the
INTERNATIONAL SEARCHING AUTHORITY

To: Yiu F. Au
Sheridan Ross P.C.
1560 Broadway
Suite 1200
Denver, Colorado 80202
United States of America

PCT

WRITTEN OPINION OF THE
INTERNATIONAL SEARCHING AUTHORITY

(PCT Rule 43*bis*.1)

Date of mailing *(day/month/year)* 22 NOV 2013

Applicant's or agent's file reference	FOR FURTHER ACTION
6583-520-PCT	See paragraph 2 below

International application No.	International filing date *(day/month/year)*	Priority date *(day/month/year)*
PCT/US13/55570	19 August 2013 (19.08.2013)	17 August 2012 (17.08.2012)

International Patent Classification (IPC) or both national classification and IPC
IPC(8) - G06F 3/00, 13/00; H04N 5/445, 7/14 (2013.01)
USPC - 725/037, 39, 40; 348/14.07

Applicant Flextronics AP, LLC

1. This opinion contains indications relating to the following items:

- [x] Box No. I Basis of the opinion
- [ ] Box No. II Priority
- [ ] Box No. III Non-establishment of opinion with regard to novelty, inventive step and industrial applicability
- [ ] Box No. IV Lack of unity of invention
- [x] Box No. V Reasoned statement under Rule 43*bis*.1(a)(i) with regard to novelty, inventive step or industrial applicability; citations and explanations supporting such statement
- [ ] Box No. VI Certain documents cited
- [ ] Box No. VII Certain defects in the international application
- [ ] Box No. VIII Certain observations on the international application

2. **FURTHER ACTION**

If a demand for international preliminary examination is made, this opinion will be considered to be a written opinion of the International Preliminary Examining Authority ("IPEA") except that this does not apply where the applicant chooses an Authority other than this one to be the IPEA and the chosen IPEA has notified the International Bureau under Rule 66.1 *bis*(b) that written opinions of this International Searching Authority will not be so considered.

If this opinion is, as provided above, considered to be a written opinion of the IPEA, the applicant is invited to submit to the IPEA a written reply together, where appropriate, with amendments, before the expiration of 3 months from the date of mailing of Fom PCT/ISA/220 or before the expiration of 22 months from the priority date, whichever expires later.

For further options, see Form PCT/ISA/220.

Name and mailing address of the ISA/US	Date of completion of this opinion	Authorized officer:
Mail Stop PCT, Attn: ISA/US Commissioner for Patents P.O. Box 1450, Alexandria, Virginia 22313-1450 Facsimile No. 571-273-3201	11 November 2013 (11.11.2013)	Shane Thomas PCT Helpdesk: 571-272-4300 PCT OSP: 571-272-7774

Form PCT/ISA/237 (cover sheet) (July 2011)

WRITTEN OPINION OF THE
INTERNATIONAL SEARCHING AUTHORITY

International application No.
PCT/US13/55570

Box No. I **Basis of this opinion**

1. With regard to the **language**, this opinion has been established on the basis of:

   ☒ the international application in the language in which it was filed.

   ☐ a translation of the international application into _____ which is the language of a translation furnished for the purposes of international search (Rules 12.3(a) and 23.1(b)).

2. ☐ This opinion has been established taking into account the **rectification of an obvious mistake** authorized by or notified to this Authority under Rule 91 (Rule 43*bis*.1(a))

3. With regard to any **nucleotide and/or amino acid sequence** disclosed in the international application, this opinion has been established on the basis of a sequence listing filed or furnished:

   a. (means)

   ☐ on paper

   ☐ in electronic form

   b. (time)

   ☐ in the international application as filed

   ☐ together with the international application in electronic form

   ☐ subsequently to this Authority for the purposes of search

4. ☐ In addition, in the case that more than one version or copy of a sequence listing has been filed or furnished, the required statements that the information in the subsequent or additional copies is identical to that in the application as filed or does not go beyond the application as filed, as appropriate, were furnished.

5. Additional comments:

WRITTEN OPINION OF THE INTERNATIONAL SEARCHING AUTHORITY

International application No.
PCT/US13/55570

Box No. V **Reasoned statement under Rule 43*bis*.1(a)(i) with regard to novelty, inventive step or industrial applicability; citations and explanations supporting such statement**

1. Statement

Novelty (N)	Claims	NONE	YES
	Claims	1-20	NO
Inventive step (IS)	Claims	NONE	YES
	Claims	1-20	NO
Industrial applicability (IA)	Claims	1-20	YES
	Claims	NONE	NO

2. Citations and explanations:

Claims 1-20 lack novelty under PCT Article 33(2) as being anticipated by US 7,174,126 B2 McElhatten et al. (hereinafter "McElhatten").

As to claim 1, McElhatten discloses a method of displaying Electronic Programming Guide (EPG) information on an Intelligent television (TV), comprising: (accessing and locating the desired program from the interactive program guide (electronic programming guide EPG) is a menu including different reservation options for selections is displayed on the TV screen (intelligent television), column 16, lines 30-32 and column 14, lines 7-8) displaying an in-use portion on a screen of the Intelligent TV (GUI 1900 comprises window 1903 which displays thereon an in-progress HBO program, Figure 31, column 32, lines 42-43); and displaying a partial portion on the screen, comprising displaying a favorite channel portion showing EPG information for a plurality of favorite tagged channels (A channel may be designated as a "Favorite Channel" by selecting "Favorite Channels" from the Favorites menu 1420 or by pressing FAV key 980 of remote control 900. Once a user has defined one or more Favorite channels, the user can toggle interactive program guide 1020 to display only Favorite channels and re-toggle back to the full list of channels, Figure 24, column 26, line 64 through column 27, line 4) and a favorite show portion showing EPG information for a plurality of favorite tagged shows (Reserve GUI 5520 is displayed, providing the user with two reserve options (5530): (1) reserve the program, and (2) select a season pass. The program reserve option which is highlighted as the default choice enables a user to select a program to be added to a user's Favorite Show list which becomes available for viewing after the program has broadcast. Program guide 5510b is then redisplayed, Figure 23, column 17, lines 3-10).

As to claim 2, McElhatten discloses the method of claim 1, wherein the partial portion overlays the in-use portion (GUI 1900 comprises window 1903 (overlays) which displays thereon an in-progress HBO program, Figure 31, column 32, lines 42-43).

As to claim 3, McElhatten discloses the method of claim 1, wherein the in-use portion comprises a currently playing TV program (GUI 1900 comprises window 1903 which displays thereon an in-progress HBO program (currently playing TV program), Figure 31, column 32, lines 42-43).

As to claim 4, McElhatten discloses the method of claim 1, wherein the partial portion resizes the in-use portion (GUI 1900 comprises window 1903 (resized into smaller corner window) which displays thereon an in-progress HBO program (currently playing TV program), Figure 31, column 32, lines 42-43).

As to claim 5, McElhatten discloses the method of claim 1, wherein the plurality of favorite tagged shows is a plurality of shows that are currently airing (Users can reserve programs that are currently being broadcast while they are watching the program or from an interactive program guide, Figure 23, column 15, lines 37-42).

As to claim 6, McElhatten discloses the method of claim 1, wherein the partial portion is generated by an EPG display application of the Intelligent TV (GUI 1900 comprises window 1903 (overlays) which displays thereon an in-progress HBO program, Figure 31, column 32, lines 42-43).

As to claim 7, McElhatten discloses the method of claim 6, wherein the EPG display application is configured to retrieve the EPG information for the plurality of favorite tagged channels and the plurality of favorite tagged shows through an EPG subservice, wherein the EPG subservice is configured to retrieve channels and shows tagged as favorite through a tag subservice (By accessing Home GUI 1030, a user is prompted to select one of the programming features listed in menu 1110. By selecting Favorites feature 1410 of menu 1110, the user accesses Favorites submenu 1420 on Favorites GUI 1400 which offers several choices concerning the Favorites feature. For example, in this instance the user can choose from: creating a new profile, deleting an existing profile, adding parameters to an existing profile, finding favorite channels or shows and excluding channels, Figure 23, column 25, line 64 through column 26, line 6).

As to claim 8, McElhatten discloses the method of claim 7, wherein a second application is configured to set and clear favorite tags for channels and shows through the tag subservice (By selecting Favorites feature 1410 of menu 1110, the user accesses Favorites submenu 1420 on Favorites GUI 1400 which offers several choices concerning the Favorites feature. For example, in this instance the user can choose from: creating (set) a new profile, deleting (clear) an existing profile, adding parameters to an existing profile, finding favorite channels or shows and excluding channels, Figure 23, column 25, line 65 through column 26, line 6).

-***-Continued Within the Next Supplemental Box-***-

WRITTEN OPINION OF THE INTERNATIONAL SEARCHING AUTHORITY

International application No.
PCT/US13/55570

Supplemental Box

In case the space in any of the preceding boxes is not sufficient.
Continuation of:

-***-Continued from Previous Supplemental Box-***-

As to claim 9, McElhatten discloses the method of claim 6, wherein the EPG display is configured to retrieve and display thumbnails for channels and shows through a thumbnail cache manager, wherein uniform resource identifiers (URis) for each thumbnail is in the EPG information retrieved through the EPG subservice, and wherein the thumbnail cache manager is configured to serve each thumbnail using the respective URI (Figure 31, What's Hot feature to reserve certain HBO programs (channel) through their promotional previews, the user may select a "What's Hot!" option, denoted 1925. Similar to a What's Hot preview, a thumbnail preview, denoted 1931, may be used to reserve the program (show) e.g., "The Gathering Storm" featured in the preview in advance of the broadcast of the program e.g., on April 27. To make such a reservation, the user may highlight and select preview 1931, Figure 31, column 32, line 63 through column 33, line 5).

As to claim 10, McElhatten discloses a display for an Intelligent television (TV), comprising a live TV display and an Electronic Programming Guide (EPG) display, the EPG display is positioned at a side of the live TV display (GUI 1900 comprises window 1903 which displays thereon an in-progress HBO program, Figure 31, column 32, lines 42-43) and comprising: a favorite channel portion showing EPG information for a plurality of favorite tagged channels (A channel may be designated as a "Favorite Channel" by selecting "Favorite Channels" from the Favorites menu 1420 or by pressing FAV key 980 of remote control 900. Once a user has defined one or more Favorite channels, the user can toggle interactive program guide 1020 to display only Favorite channels and re-toggle back to the full list of channels, Figure 24, column 26, line 64 through column 27, line 4); and a favorite show portion showing EPG information for a plurality of favorite tagged shows, wherein an EPG display application is configured to generate the EPG display portion and retrieve the EPG information for the plurality of favorite tagged channels and the plurality of favorite tagged shows through an EPG subservice, wherein the EPG subservice is configured to retrieve channels and shows tagged as favorite through a tag subservice (Reserve GUI 5520 is displayed, providing the user with two reserve options (5530): (1) reserve the program, and (2) select a season pass. The program reserve option which is highlighted as the default choice enables a user to select a program to be added to a user's Favorite Show list which becomes available for viewing after the program has broadcast. Program guide 5510b is then redisplayed, Figure 23, column 17, lines 3-10), and wherein a second application is configured to set and clear favorite tags for channels and shows through the tag subservice (By selecting Favorites feature 1410 of menu 1110, the user accesses Favorites submenu 1420 on Favorites GUI 1400 which offers several choices concerning the Favorites feature. For example, in this instance the user can choose from: creating (set) a new profile, deleting (clear) an existing profile, adding parameters to an existing profile, finding favorite channels or shows and excluding channels, column 25, line 65 through column 26, line 6).

As to claim 11, McElhatten discloses a display for an Intelligent television TV, comprising a partial-screen display on an in-use display of the Intelligent TV, the partial-screen display comprising a favorite channel portion showing Electronic Programming Guide EPG information for a plurality of favorite tagged channels (A channel may be designated as a "Favorite Channel" by selecting "Favorite Channels" from the Favorites menu 1420 or by pressing FAV key 980 of remote control 900. Once a user has defined one or more Favorite channels, the user can toggle interactive program guide 1020 to display only Favorite channels and re-toggle back to the full list of channels, Figure 24, column 26, line 64 through column 27, line 4) and a favorite show portion showing EPG information for a plurality of favorite tagged shows (Reserve GUI 5520 is displayed, providing the user with two reserve options (5530): (1) reserve the program, and (2) select a season pass. The program reserve option which is highlighted as the default choice enables a user to select a program to be added to a user's Favorite Show list which becomes available for viewing after the program has broadcast. Program guide 5510b is then redisplayed, Figure 23, column 17, lines 3-10).

As to claim 12, McElhatten discloses the EPG display of claim 11, wherein the partial-screen display overlays the in-use display of the Intelligent TV (GUI 1900 comprises window 1903 (overlays) which displays thereon an in-progress HBO program, Figure 31, column 32, lines 42-43).

As to claim 13, McElhatten discloses the EPG display of claim 11, wherein the in-use display comprises a currently playing TV program (GUI 1900 comprises window 1903 which displays thereon an in-progress HBO program (currently playing TV program), Figure 31, column 32, lines 42-43).

As to claim 14, McElhatten discloses the EPG display of claim 11, wherein the partial-screen display resizes the in-use display (GUI 1900 comprises window 1903 (resized into smaller corner window) which displays thereon an in-progress HBO program (currently playing TV program), Figure 31, column 32, lines 42-43).

As to claim 15, McElhatten discloses the EPG display of claim 11, wherein the plurality of favorite tagged shows is a plurality of shows that are currently airing (Users can reserve programs that are currently being broadcast while they are watching the program or from an interactive program guide, Figure 23, column 15, lines 37-42).

As to claim 16, McElhatten discloses the EPG display of claim 11, wherein an EPG display application is configured to generate the partial-screen display (GUI 1900 comprises window 1903 (overlays) which displays thereon an in-progress HBO program, Figure 31, column 32, lines 42-43).

As to claim 17, McElhatten discloses the EPG display of claim 16, wherein the EPG display application is configured to retrieve the EPG information for the plurality of favorite tagged channels and the plurality of favorite tagged shows through an EPG subservice, wherein the EPG subservice is configured to retrieve channels and shows tagged as favorite through a tag subservice (By accessing Home GUI 1030, a user is prompted to select one of the programming features listed in menu 1110. By selecting Favorites feature 1410 of menu 1110, the user accesses Favorites submenu 1420 on Favorites GUI 1400 which offers several choices concerning the Favorites feature. For example, in this instance the user can choose from: creating a new profile, deleting an existing profile, adding parameters to an existing profile, finding favorite channels or shows and excluding channels, Figure 23, column 25, line 64 through column 26, line 6).

-***-Continued Within the Next Supplemental Box-***-

WRITTEN OPINION OF THE
INTERNATIONAL SEARCHING AUTHORITY

International application No.
PCT/US13/55570

Supplemental Box

In case the space in any of the preceding boxes is not sufficient.
Continuation of:

-***-Continued from Previous Supplemental Box-***-

As to claim 18, McElhatten discloses the EPG display of claim 17, wherein a second application is configured to set and clear favorite tags for channels and shows through the tag subservice (By selecting Favorites feature 1410 of menu 1110, the user accesses Favorites submenu 1420 on Favorites GUI 1400 which offers several choices concerning the Favorites feature. For example, in this instance the user can choose from: creating (set) a new profile, deleting (clear) an existing profile, adding parameters to an existing profile, finding favorite channels or shows and excluding channels, Figure 23, column 25, line 65 through column 26, line 6).

As to claim 19, McElhatten discloses the EPG display of claim 16, wherein the EPG display application is configured to retrieve and display thumbnails for channels and shows through a thumbnail cache manager, wherein uniform resource identifiers (URis) for each thumbnail is in the EPG information retrieved through the EPG subservice, and wherein the thumbnail cache manager is configured to serve each thumbnail using the respective URI (Figure 31, What's Hot feature to reserve certain HBO programs (channel) through their promotional previews, the user may select a "What's Hot!" option, denoted 1925. Similar to a What's Hot preview, a thumbnail preview, denoted 1931, may be used to reserve the program (show) e.g., "The Gathering Storm" featured in the preview in advance of the broadcast of the program e.g., on April 27. To make such a reservation, the user may highlight and select preview 1931, Figure 31, column 32, line 63 through column 33, line 5).

As to claim 20, McElhatten discloses a tangible and non-transient computer readable medium comprising microprocessor executable instructions that, when executed by the microprocessor, perform the steps of claim 1 (processor 109 while processing TV program 201 may locate the corresponding program guide data to create in real time the metadata file associated with TV program 201. The metadata file thus created includes such data as the title, rating, names of the producer, director, and actors, duration of the program, program type, etc, column 7, lines 5-12).

Claims 1-20 have industrial applicability as defined by PCT Article 33(4) because the subject matter can be made or used in industry.

Electronic Acknowledgement Receipt

EFS ID:	18729127
Application Number:	13968665
International Application Number:	
Confirmation Number:	7370
Title of Invention:	PANEL USER INTERFACE FOR AN INTELLIGENT TELEVISION
First Named Inventor/Applicant Name:	Sanjiv Sirpal
Customer Number:	111285
Filer:	Douglas W. Swartz/Robert Roe-Pachirat
Filer Authorized By:	Douglas W. Swartz
Attorney Docket Number:	6583-488
Receipt Date:	10-APR-2014
Filing Date:	16-AUG-2013
Time Stamp:	15:15:21
Application Type:	Utility under 35 USC 111(a)

Payment information:

Submitted with Payment	no

File Listing:

Document Number	Document Description	File Name	File Size(Bytes)/ Message Digest	Multi Part /.zip	Pages (if appl.)
1	Non Patent Literature	6583-487-PCT_ISR-WO_11-28-2013.pdf	718366 0f8c12e1bfc5b984f265ef84092014983076 41cc	no	10

Warnings:

Information:

2	Non Patent Literature	6583-488-PCT_ISR-WO_12-05-2013.pdf	473518 91b44a82ee37b5649f34be13ebfe1ee67116f6fd	no	8
Warnings:					
Information:					
3	Non Patent Literature	6583-489-PCT_ISR-WO_01-10-2014.pdf	681319 0ae32d0ad33aea52f184c38b6dd2dfd77131f6ad5	no	10
Warnings:					
Information:					
4	Non Patent Literature	6583-490-PCT_ISR-WO_11-13-2013.pdf	397458 2c0682afb521907316c6ed00e3ed72f1804913a8	no	9
Warnings:					
Information:					
5	Non Patent Literature	6583-491-PCT_ISR-WO_03-11-2014.pdf	421827 4c1c782f2029304d1d64aebe489394e16a86107d	no	8
Warnings:					
Information:					
6	Non Patent Literature	6583-492-PCT_ISR-WO_12-06-2013.pdf	351402 d8cf8457583907262af8e1a2ed8bc782b8f761ef	no	7
Warnings:					
Information:					
7	Non Patent Literature	6583-493-PCT_ISR-WO_11-08-2013.pdf	352023 03b4bbbd531dccb6b0707e88f6f87ae4ea8f117e	no	7
Warnings:					
Information:					
8	Non Patent Literature	6583-494-PCT_ISR-WO_03-10-2014.pdf	604754 f0d1e6ef4e78b612a2156731302f486d1ad06f21	no	10
Warnings:					
Information:					
9	Non Patent Literature	6583-495-PCT_ISR-WO_03-04-2014.pdf	438222 92d1047f8faf7958749f2e7cb5c952f1f39c0644	no	7
Warnings:					
Information:					
10	Non Patent Literature	6583-496-PCT_ISR-WO_11-22-2013.pdf	389487 bf38477d820b0506c7175b186941665262dac91c	no	7
Warnings:					
Information:					

11	Non Patent Literature	6583-497-PCT_ISR-WO_12-06-2013.pdf	410723 006584e78faa845c5e005a88c00b1ac14a5a1ac1	no	8
Warnings:					
Information:					
12	Non Patent Literature	6583-498-PCT_ISR-WO_11-29-2013.pdf	407950 d6f7c0e0bdb8bb57b74c0a429c9bec1ef1553dc1	no	7
Warnings:					
Information:					
13	Non Patent Literature	6583-499-PCT_ISR-WO_12-05-2013.pdf	532094 e1d29b1d3b0b4610159830ca125e72be8e20416c	no	8
Warnings:					
Information:					
14	Non Patent Literature	6583-500-PCT_ISR-WO_11-12-2013.pdf	388530 c7130d43624edfcde1b0e36bb25b22242328d648	no	8
Warnings:					
Information:					
15	Non Patent Literature	6583-501-PCT_ISR-WO_03-10-2014.pdf	555137 1f3f7909542f1161039b44dc1a68e716325c11ab	no	9
Warnings:					
Information:					
16	Non Patent Literature	6583-502-PCT_ISR-WO_01-24-2014.pdf	601510 1f4cf6f58e52111f04894e2a240a6bcaca39694c	no	9
Warnings:					
Information:					
17	Non Patent Literature	6583-503-PCT_ISR-WO_12-02-2013.pdf	645177 28adc34670d0db669c5b51151c5c9a91bbc3faf4	no	9
Warnings:					
Information:					
18	Non Patent Literature	6583-504-PCT_ISR-WO_01-09-2014.pdf	584401 ef6db3b749b8b0407202041869 27f86ec68bfdeb	no	10
Warnings:					
Information:					
19	Non Patent Literature	6583-505-PCT_ISR-WO_03-11-2014.pdf	388550 2db3e38c742eef6a92473398c0e3d4a38f0ab622	no	7
Warnings:					
Information:					

20	Non Patent Literature	6583-506-PCT_ISR-WO_12-06-2013.pdf	463348 49292447fb7427af1df28cf0723baf2a7fea069c	no	9
Warnings:					
Information:					
21	Non Patent Literature	6583-507-PCT_ISR-WO_11-21-2013.pdf	737114 cd71f9e52f933a1e8b44f943d41543580fcd928f	no	11
Warnings:					
Information:					
22	Non Patent Literature	6583-509-PCT_ISR-WO_11-29-2013.pdf	532190 4ce372f45cab0daab5ba84c30717fe69fc4cd965	no	8
Warnings:					
Information:					
23	Non Patent Literature	6583-519-PCT_ISR-WO_12-20-2013.pdf	591817 35f58988546c84333c13045c863896a9a13a1c2c	no	10
Warnings:					
Information:					
24	Non Patent Literature	6583-520-PCT_ISR-WO_11-22-2013.pdf	475124 737058906109c9a2da5214c4bcf2508a31c1c5ea	no	8
Warnings:					
Information:					
25	Non Patent Literature	6583-425_OA_11-27-2013.pdf	610346 35acd0b77bdff61f8404a41dff229a7f924b0c15	no	17
Warnings:					
Information:					
26	Non Patent Literature	6583-469_OA_03-12-2014.pdf	385794 3914dcbf106dbd95a61366c78770b3824d35cde7	no	12
Warnings:					
Information:					
			Total Files Size (in bytes):	13138181	

This Acknowledgement Receipt evidences receipt on the noted date by the USPTO of the indicated documents, characterized by the applicant, and including page counts, where applicable. It serves as evidence of receipt similar to a Post Card, as described in MPEP 503.

New Applications Under 35 U.S.C. 111
If a new application is being filed and the application includes the necessary components for a filing date (see 37 CFR 1.53(b)-(d) and MPEP 506), a Filing Receipt (37 CFR 1.54) will be issued in due course and the date shown on this Acknowledgement Receipt will establish the filing date of the application.

National Stage of an International Application under 35 U.S.C. 371
If a timely submission to enter the national stage of an international application is compliant with the conditions of 35 U.S.C. 371 and other applicable requirements a Form PCT/DO/EO/903 indicating acceptance of the application as a national stage submission under 35 U.S.C. 371 will be issued in addition to the Filing Receipt, in due course.

New International Application Filed with the USPTO as a Receiving Office
If a new international application is being filed and the international application includes the necessary components for an international filing date (see PCT Article 11 and MPEP 1810), a Notification of the International Application Number and of the International Filing Date (Form PCT/RO/105) will be issued in due course, subject to prescriptions concerning national security, and the date shown on this Acknowledgement Receipt will establish the international filing date of the application.

UNITED STATES PATENT AND TRADEMARK OFFICE

UNITED STATES DEPARTMENT OF COMMERCE
United States Patent and Trademark Office
Address: COMMISSIONER FOR PATENTS
P.O. Box 1450
Alexandria, Virginia 22313-1450
www.uspto.gov

APPLICATION NUMBER	FILING OR 371(C) DATE	FIRST NAMED APPLICANT	ATTY. DOCKET NO./TITLE
13/968,665	08/16/2013	Sanjiv Sirpal	6583-488

CONFIRMATION NO. 7370

PUBLICATION NOTICE

OC000000066853802

111285
Sheridan Ross P.C.
1560 Broadway
Suite 1200
Denver, CO 80202

Title:PANEL USER INTERFACE FOR AN INTELLIGENT TELEVISION

Publication No.US-2014-0059605-A1
Publication Date:02/27/2014

NOTICE OF PUBLICATION OF APPLICATION

The above-identified application will be electronically published as a patent application publication pursuant to 37 CFR 1.211, et seq. The patent application publication number and publication date are set forth above.

The publication may be accessed through the USPTO's publically available Searchable Databases via the Internet at www.uspto.gov. The direct link to access the publication is currently http://www.uspto.gov/patft/.

The publication process established by the Office does not provide for mailing a copy of the publication to applicant. A copy of the publication may be obtained from the Office upon payment of the appropriate fee set forth in 37 CFR 1.19(a)(1). Orders for copies of patent application publications are handled by the USPTO's Office of Public Records. The Office of Public Records can be reached by telephone at (703) 308-9726 or (800) 972-6382, by facsimile at (703) 305-8759, by mail addressed to the United States Patent and Trademark Office, Office of Public Records, Alexandria, VA 22313-1450 or via the Internet.

In addition, information on the status of the application, including the mailing date of Office actions and the dates of receipt of correspondence filed in the Office, may also be accessed via the Internet through the Patent Electronic Business Center at www.uspto.gov using the public side of the Patent Application Information and Retrieval (PAIR) system. The direct link to access this status information is currently http://pair.uspto.gov/. Prior to publication, such status information is confidential and may only be obtained by applicant using the private side of PAIR.

Further assistance in electronically accessing the publication, or about PAIR, is available by calling the Patent Electronic Business Center at 1-866-217-9197.

Office of Data Managment, Application Assistance Unit (571) 272-4000, or (571) 272-4200, or 1-888-786-0101

PATENT APPLICATION FEE DETERMINATION RECORD

Substitute for Form PTO-875

Application or Docket Number
13/968,665

APPLICATION AS FILED - PART I

FOR	(Column 1) NUMBER FILED	(Column 2) NUMBER EXTRA	SMALL ENTITY RATE($)	SMALL ENTITY FEE($)	OR	OTHER THAN SMALL ENTITY RATE($)	OTHER THAN SMALL ENTITY FEE($)
BASIC FEE (37 CFR 1.16(a), (b), or (c))	N/A	N/A	N/A			N/A	280
SEARCH FEE (37 CFR 1.16(k), (i), or (m))	N/A	N/A	N/A			N/A	600
EXAMINATION FEE (37 CFR 1.16(o), (p), or (q))	N/A	N/A	N/A			N/A	720
TOTAL CLAIMS (37 CFR 1.16(i))	20 minus 20 =	*			OR	x 80 =	0.00
INDEPENDENT CLAIMS (37 CFR 1.16(h))	3 minus 3 =	*				x 420 =	0.00
APPLICATION SIZE FEE (37 CFR 1.16(s))	If the specification and drawings exceed 100 sheets of paper, the application size fee due is $310 ($155 for small entity) for each additional 50 sheets or fraction thereof. See 35 U.S.C. 41(a)(1)(G) and 37 CFR 1.16(s).						0.00
MULTIPLE DEPENDENT CLAIM PRESENT (37 CFR 1.16(j))							0.00
* If the difference in column 1 is less than zero, enter "0" in column 2.			TOTAL			TOTAL	1600

APPLICATION AS AMENDED - PART II

		(Column 1) CLAIMS REMAINING AFTER AMENDMENT		(Column 2) HIGHEST NUMBER PREVIOUSLY PAID FOR	(Column 3) PRESENT EXTRA	SMALL ENTITY RATE($)	SMALL ENTITY ADDITIONAL FEE($)	OR	OTHER THAN SMALL ENTITY RATE($)	OTHER THAN SMALL ENTITY ADDITIONAL FEE($)
AMENDMENT A	Total (37 CFR 1.16(i))	*	Minus	**	=	x =		OR	x =	
AMENDMENT A	Independent (37 CFR 1.16(h))	*	Minus	***	=	x =		OR	x =	
AMENDMENT A	Application Size Fee (37 CFR 1.16(s))									
AMENDMENT A	FIRST PRESENTATION OF MULTIPLE DEPENDENT CLAIM (37 CFR 1.16(j))							OR		
						TOTAL ADD'L FEE		OR	TOTAL ADD'L FEE	

		(Column 1) CLAIMS REMAINING AFTER AMENDMENT		(Column 2) HIGHEST NUMBER PREVIOUSLY PAID FOR	(Column 3) PRESENT EXTRA	RATE($)	ADDITIONAL FEE($)	OR	RATE($)	ADDITIONAL FEE($)
AMENDMENT B	Total (37 CFR 1.16(i))	*	Minus	**	=	x =		OR	x =	
AMENDMENT B	Independent (37 CFR 1.16(h))	*	Minus	***	=	x =		OR	x =	
AMENDMENT B	Application Size Fee (37 CFR 1.16(s))									
AMENDMENT B	FIRST PRESENTATION OF MULTIPLE DEPENDENT CLAIM (37 CFR 1.16(j))							OR		
						TOTAL ADD'L FEE		OR	TOTAL ADD'L FEE	

* If the entry in column 1 is less than the entry in column 2, write "0" in column 3.
** If the "Highest Number Previously Paid For" IN THIS SPACE is less than 20, enter "20".
*** If the "Highest Number Previously Paid For" IN THIS SPACE is less than 3, enter "3".
The "Highest Number Previously Paid For" (Total or Independent) is the highest found in the appropriate box in column 1.

UNITED STATES PATENT AND TRADEMARK OFFICE

UNITED STATES DEPARTMENT OF COMMERCE
United States Patent and Trademark Office
Address: COMMISSIONER FOR PATENTS
P.O. Box 1450
Alexandria, Virginia 22313-1450
www.uspto.gov

APPLICATION NUMBER	FILING or 371(c) DATE	GRP ART UNIT	FIL FEE REC'D	ATTY.DOCKET.NO	TOT CLAIMS	IND CLAIMS
13/968,665	08/16/2013	2425	1740	6583-488	20	3

CONFIRMATION NO. 7370

UPDATED FILING RECEIPT

111285
Sheridan Ross P.C.
1560 Broadway
Suite 1200
Denver, CO 80202

OC000000064991437

Date Mailed: 11/20/2013

Receipt is acknowledged of this non-provisional patent application. The application will be taken up for examination in due course. Applicant will be notified as to the results of the examination. Any correspondence concerning the application must include the following identification information: the U.S. APPLICATION NUMBER, FILING DATE, NAME OF APPLICANT, and TITLE OF INVENTION. Fees transmitted by check or draft are subject to collection. Please verify the accuracy of the data presented on this receipt. **If an error is noted on this Filing Receipt, please submit a written request for a Filing Receipt Correction. Please provide a copy of this Filing Receipt with the changes noted thereon. If you received a "Notice to File Missing Parts" for this application, please submit any corrections to this Filing Receipt with your reply to the Notice. When the USPTO processes the reply to the Notice, the USPTO will generate another Filing Receipt incorporating the requested corrections**

Inventor(s)

Sanjiv Sirpal, Oakville, CANADA;
Mohammed Selim, Oakville, CANADA;
Saulo Correia Dourado, Oakville, CANADA;
Alexander de Paz, Burlington, CANADA;

Applicant(s)

Flextronics AP, LLC, San Jose, CA

Assignment For Published Patent Application

Flextronics AP, LLC, San Jose, CA

Power of Attorney: The patent practitioners associated with Customer Number 111285

Domestic Priority data as claimed by applicant

This appln claims benefit of 61/684,672 08/17/2012
and claims benefit of 61/702,650 09/18/2012
and claims benefit of 61/697,710 09/06/2012
and claims benefit of 61/700,182 09/12/2012
and claims benefit of 61/736,692 12/13/2012
and claims benefit of 61/798,821 03/15/2013
and claims benefit of 61/804,942 03/25/2013
and claims benefit of 61/804,998 03/25/2013
and claims benefit of 61/804,971 03/25/2013
and claims benefit of 61/804,990 03/25/2013
and claims benefit of 61/805,003 03/25/2013
and claims benefit of 61/805,053 03/25/2013
and claims benefit of 61/805,030 03/25/2013
and claims benefit of 61/805,027 03/25/2013

and claims benefit of 61/805,042 03/25/2013
and claims benefit of 61/805,038 03/25/2013

Foreign Applications for which priority is claimed (You may be eligible to benefit from the **Patent Prosecution Highway** program at the USPTO. Please see http://www.uspto.gov for more information.) - None.
Foreign application information must be provided in an Application Data Sheet in order to constitute a claim to foreign priority. See 37 CFR 1.55 and 1.76.

If Required, Foreign Filing License Granted: 09/04/2013

The country code and number of your priority application, to be used for filing abroad under the Paris Convention, is **US 13/968,665**

Projected Publication Date: 02/27/2014

Non-Publication Request: No

Early Publication Request: No

Title

PANEL USER INTERFACE FOR AN INTELLIGENT TELEVISION

Preliminary Class

725

Statement under 37 CFR 1.55 or 1.78 for AIA (First Inventor to File) Transition Applications: No

PROTECTING YOUR INVENTION OUTSIDE THE UNITED STATES

Since the rights granted by a U.S. patent extend only throughout the territory of the United States and have no effect in a foreign country, an inventor who wishes patent protection in another country must apply for a patent in a specific country or in regional patent offices. Applicants may wish to consider the filing of an international application under the Patent Cooperation Treaty (PCT). An international (PCT) application generally has the same effect as a regular national patent application in each PCT-member country. The PCT process **simplifies** the filing of patent applications on the same invention in member countries, but **does not result** in a grant of "an international patent" and does not eliminate the need of applicants to file additional documents and fees in countries where patent protection is desired.

Almost every country has its own patent law, and a person desiring a patent in a particular country must make an application for patent in that country in accordance with its particular laws. Since the laws of many countries differ in various respects from the patent law of the United States, applicants are advised to seek guidance from specific foreign countries to ensure that patent rights are not lost prematurely.

Applicants also are advised that in the case of inventions made in the United States, the Director of the USPTO must issue a license before applicants can apply for a patent in a foreign country. The filing of a U.S. patent application serves as a request for a foreign filing license. The application's filing receipt contains further information and guidance as to the status of applicant's license for foreign filing.

Applicants may wish to consult the USPTO booklet, "General Information Concerning Patents" (specifically, the section entitled "Treaties and Foreign Patents") for more information on timeframes and deadlines for filing foreign patent applications. The guide is available either by contacting the USPTO Contact Center at 800-786-9199, or it can be viewed on the USPTO website at http://www.uspto.gov/web/offices/pac/doc/general/index.html.

For information on preventing theft of your intellectual property (patents, trademarks and copyrights), you may wish to consult the U.S. Government website, http://www.stopfakes.gov. Part of a Department of Commerce initiative, this website includes self-help "toolkits" giving innovators guidance on how to protect intellectual property in specific countries such as China, Korea and Mexico. For questions regarding patent enforcement issues, applicants may call the U.S. Government hotline at 1-866-999-HALT (1-866-999-4258).

LICENSE FOR FOREIGN FILING UNDER

Title 35, United States Code, Section 184

Title 37, Code of Federal Regulations, 5.11 & 5.15

GRANTED

The applicant has been granted a license under 35 U.S.C. 184, if the phrase "IF REQUIRED, FOREIGN FILING LICENSE GRANTED" followed by a date appears on this form. Such licenses are issued in all applications where the conditions for issuance of a license have been met, regardless of whether or not a license may be required as set forth in 37 CFR 5.15. The scope and limitations of this license are set forth in 37 CFR 5.15(a) unless an earlier license has been issued under 37 CFR 5.15(b). The license is subject to revocation upon written notification. The date indicated is the effective date of the license, unless an earlier license of similar scope has been granted under 37 CFR 5.13 or 5.14.

This license is to be retained by the licensee and may be used at any time on or after the effective date thereof unless it is revoked. This license is automatically transferred to any related applications(s) filed under 37 CFR 1.53(d). This license is not retroactive.

The grant of a license does not in any way lessen the responsibility of a licensee for the security of the subject matter as imposed by any Government contract or the provisions of existing laws relating to espionage and the national security or the export of technical data. Licensees should apprise themselves of current regulations especially with respect to certain countries, of other agencies, particularly the Office of Defense Trade Controls, Department of State (with respect to Arms, Munitions and Implements of War (22 CFR 121-128)); the Bureau of Industry and Security, Department of Commerce (15 CFR parts 730-774); the Office of Foreign AssetsControl, Department of Treasury (31 CFR Parts 500+) and the Department of Energy.

NOT GRANTED

No license under 35 U.S.C. 184 has been granted at this time, if the phrase "IF REQUIRED, FOREIGN FILING LICENSE GRANTED" DOES NOT appear on this form. Applicant may still petition for a license under 37 CFR 5.12, if a license is desired before the expiration of 6 months from the filing date of the application. If 6 months has lapsed from the filing date of this application and the licensee has not received any indication of a secrecy order under 35 U.S.C. 181, the licensee may foreign file the application pursuant to 37 CFR 5.15(b).

SelectUSA

The United States represents the largest, most dynamic marketplace in the world and is an unparalleled location for business investment, innovation, and commercialization of new technologies. The U.S. offers tremendous resources and advantages for those who invest and manufacture goods here. Through SelectUSA, our nation works to promote and facilitate business investment. SelectUSA provides information assistance to the international investor

community; serves as an ombudsman for existing and potential investors; advocates on behalf of U.S. cities, states, and regions competing for global investment; and counsels U.S. economic development organizations on investment attraction best practices. To learn more about why the United States is the best country in the world to develop technology, manufacture products, deliver services, and grow your business, visit http://www.SelectUSA.gov or call +1-202-482-6800.

UNITED STATES PATENT AND TRADEMARK OFFICE

UNITED STATES DEPARTMENT OF COMMERCE
United States Patent and Trademark Office
Address: COMMISSIONER FOR PATENTS
P.O. Box 1450
Alexandria, Virginia 22313-1450
www.uspto.gov

APPLICATION NUMBER	FILING OR 371(C) DATE	FIRST NAMED APPLICANT	ATTY. DOCKET NO./TITLE
13/968,665	08/16/2013	Sanjiv Sirpal	6583-488

CONFIRMATION NO. 7370

POA ACCEPTANCE LETTER

111285
Sheridan Ross P.C.
1560 Broadway
Suite 1200
Denver, CO 80202

OC000000064991459

Date Mailed: 11/20/2013

NOTICE OF ACCEPTANCE OF POWER OF ATTORNEY

This is in response to the Power of Attorney filed 11/11/2013.

The Power of Attorney in this application is accepted. Correspondence in this application will be mailed to the above address as provided by 37 CFR 1.33.

/ydemisse/

Office of Data Management, Application Assistance Unit (571) 272-4000, or (571) 272-4200, or 1-888-786-0101

Doc Code: PA..
Document Description: Power of Attorney

PTO/AIA/82A (07-12)
Approved for use through 11/30/2014. OMB 0651-0035
U.S. Patent and Trademark Office; U.S. DEPARTMENT OF COMMERCE
Under the Paperwork Reduction Act of 1995, no persons are required to respond to a collection of information unless it displays a valid OMB control number.

TRANSMITTAL FOR POWER OF ATTORNEY TO ONE OR MORE REGISTERED PRACTITIONERS

NOTE: This form is to be submitted with the Power of Attorney by Applicant form (PTO/AIA/82B or equivalent) to identify the application to which the Power of Attorney is directed, in accordance with 37 CFR 1.5. If the Power of Attorney by Applicant form is not accompanied by this transmittal form or an equivalent, the Power of Attorney will not be recognized in the application.

Application Number	13/968,665
Filing Date	August 16, 2013
First Named Inventor	Sanjiv Sirpal
Title	Panel User Interface for an Intelligent Television
Art Unit	2425
Examiner Name	Not yet assigned
Attorney Docket Number	6583-488

SIGNATURE of Applicant or Patent Practitioner

Signature	/Tadd F. Wilson/	Date	2013-11-11
Name	Tadd F. Wilson	Telephone	303-863-9700
Registration Number	54544		

NOTE: This form must be signed in accordance with 37 CFR 1.33. See 37 CFR 1.4(d) for signature requirements and certifications.

☒ *Total of 2 forms are submitted.

This collection of information is required by 37 CFR 1.31, 1.32 and 1.33. The information is required to obtain or retain a benefit by the public which is to file (and by the USPTO to process) an application. Confidentiality is governed by 35 U.S.C. 122 and 37 CFR 1.11 and 1.14. This collection is estimated to take 3 minutes to complete, including gathering, preparing, and submitting the completed application form to the USPTO. Time will vary depending upon the individual case. Any comments on the amount of time you require to complete this form and/or suggestions for reducing this burden, should be sent to the Chief Information Officer, U.S. Patent and Trademark Office, U.S. Department of Commerce, P.O. Box 1450, Alexandria, VA 22313-1450. DO NOT SEND FEES OR COMPLETED FORMS TO THIS ADDRESS. **SEND TO: Commissioner for Patents, P.O. Box 1450, Alexandria, VA 22313-1450.**

If you need assistance in completing the form, call 1-800-PTO-9199 and select option 2.

Doc Code: PA..

Document Description: Power of Attorney

PTO/AIA/82B(07-12)
Approved for use through 11/30/2014. OMB 0651-0035
U.S. Patent and Trademark Office; U.S. DEPARTMENT OF COMMERCE

Under the Paperwork Reduction Act of 1995, no persons are required to respond to a collection of information unless it displays a valid OMB control number.

POWER OF ATTORNEY BY APPLICANT

I hereby revoke all previous powers of attorney given in the application identified in the attached transmittal letter.

[x] I hereby appoint Practitioner(s) associated with the following Customer Number as my/our attorney(s) or agent(s), and to transact all business in the United States Patent and Trademark Office connected therewith for the application referenced in the attached transmittal letter (form PTO/AIA/82A or equivalent): 111285

OR

[ ] I hereby appoint Practitioner(s) named below as my/our attorney(s) or agent(s), and to transact all business in the United States Patent and Trademark Office connected therewith for the application referenced in the attached transmittal letter (form PTO/AIA/82A or equivalent):

Name	Registration Number	Name	Registration Number

Please recognize or change the correspondence address for the application identified in the attached transmittal letter to:

[x] The address associated with the above-mentioned Customer Number.

OR

[ ] The address associated with Customer Number:

OR

[ ] Firm or Individual Name					
Address					
City		State		Zip	
Country					
Telephone		Email			

I am the Applicant:

[ ] Inventor or Joint Inventor

[ ] Legal Representative of a Deceased or Legally Incapacitated Inventor

[x] Assignee or Person to Whom the Inventor is Under an Obligation to Assign

[ ] Person Who Otherwise Shows Sufficient Proprietary Interest (*e.g.*, a petition under 37 CFR 1.46(b)(2) was granted in the application or is concurrently being filed with this document)

SIGNATURE of Applicant for Patent

Signature		Date	03/26/2013
Name	Timothy L. Stewart	Telephone	408-576-7746
Title and Company	Secretary, Flextronics AP, LLC		

NOTE. Signature - This form must be signed by the applicant in accordance with 37 CFR 1.33. See 37 CFR 1.4 for signature requirements and certifications. Submit multiple forms for more than one signature, see below *.

[ ] *Total of _____ forms are submitted.

This collection of information is required by 37 CFR 1.31, 1.32 and 1.33. The information is required to obtain or retain a benefit by the public which is to file (and by the USPTO to process) an application. Confidentiality is governed by 35 U.S.C. 122 and 37 CFR 1.11 and 1.14. This collection is estimated to take 3 minutes to complete, including gathering, preparing, and submitting the completed application form to the USPTO. Time will vary depending upon the individual case. Any comments on the amount of time you require to complete this form and/or suggestions for reducing this burden, should be sent to the Chief Information Officer, U.S. Patent and Trademark Office, U.S. Department of Commerce, P.O. Box 1450, Alexandria, VA 22313-1450. DO NOT SEND FEES OR COMPLETED FORMS TO THIS ADDRESS. SEND TO: **Commissioner for Patents, P.O. Box 1450, Alexandria, VA 22313-1450.**

If you need assistance in completing the form, call 1-800-PTO-9199 and select option 2.

Electronic Acknowledgement Receipt

EFS ID:	17367344
Application Number:	13968665
International Application Number:	
Confirmation Number:	7370
Title of Invention:	PANEL USER INTERFACE FOR AN INTELLIGENT TELEVISION
First Named Inventor/Applicant Name:	Sanjiv Sirpal
Customer Number:	111285
Filer:	Tadd Fjelp Wilson/Amy Duarte
Filer Authorized By:	Tadd Fjelp Wilson
Attorney Docket Number:	6583-488
Receipt Date:	11-NOV-2013
Filing Date:	16-AUG-2013
Time Stamp:	16:06:15
Application Type:	Utility under 35 USC 111(a)

Payment information:

Submitted with Payment	no

File Listing:

Document Number	Document Description	File Name	File Size(Bytes)/ Message Digest	Multi Part /.zip	Pages (if appl.)
1	Applicant Response to Pre-Exam Formalities Notice	Response_to_Corrected_Papers.pdf	110496 169b999d93935ec34fec7075325329ac700b32b8	no	1

Warnings:

Information:

2	Drawings-only black and white line drawings	Replacement_Fig_2D.pdf	403121 37c902bc52f33eb915bfd5de90aaaeb948222693	no	1
Warnings:					
Information:					
3		Executed_Declarations-488.pdf	541198 045c138efcc1dc9cd498aa410ac1a86dd8bd726d	yes	4
	Multipart Description/PDF files in .zip description				
	Document Description		**Start**	**End**	
	Oath or Declaration filed		1	1	
	Oath or Declaration filed		2	2	
	Oath or Declaration filed		3	3	
	Oath or Declaration filed		4	4	
Warnings:					
Information:					
4	Power of Attorney	FlexAP_GenPOA.pdf	416542 d300d748dccc0c5137885892978e974d37ed0a3b	no	2
Warnings:					
Information:					
		Total Files Size (in bytes):	1471357		

This Acknowledgement Receipt evidences receipt on the noted date by the USPTO of the indicated documents, characterized by the applicant, and including page counts, where applicable. It serves as evidence of receipt similar to a Post Card, as described in MPEP 503.

<u>New Applications Under 35 U.S.C. 111</u>
If a new application is being filed and the application includes the necessary components for a filing date (see 37 CFR 1.53(b)-(d) and MPEP 506), a Filing Receipt (37 CFR 1.54) will be issued in due course and the date shown on this Acknowledgement Receipt will establish the filing date of the application.

<u>National Stage of an International Application under 35 U.S.C. 371</u>
If a timely submission to enter the national stage of an international application is compliant with the conditions of 35 U.S.C. 371 and other applicable requirements a Form PCT/DO/EO/903 indicating acceptance of the application as a national stage submission under 35 U.S.C. 371 will be issued in addition to the Filing Receipt, in due course.

<u>New International Application Filed with the USPTO as a Receiving Office</u>
If a new international application is being filed and the international application includes the necessary components for an international filing date (see PCT Article 11 and MPEP 1810), a Notification of the International Application Number and of the International Filing Date (Form PCT/RO/105) will be issued in due course, subject to prescriptions concerning national security, and the date shown on this Acknowledgement Receipt will establish the international filing date of the application.

IN THE UNITED STATES PATENT AND TRADEMARK OFFICE

In Re the Application of:	Group Art Unit: 2425
SIRPAL et al.	Confirmation No.: 7370
Serial No.: 13/968,665	Examiner: Not yet assigned
Filed: August 16, 2013	
Atty. File No.: 6583-488	
Entitled: "PANEL USER INTERFACE FOR AN INTELLIGENT TELEVISION"	***Submitted Via EFS-Web***

Mail Stop Missing Parts
Commissioner for Patents
P.O. Box 1450
Alexandria, VA 22313-1450

RESPONSE TO NOTICE TO FILE CORRECTED APPLICATION PAPERS

Dear Sir/Madam:

In response to the Notice to File Corrected Application Papers mailed September 9, 2013, in connection with the above-identified application, submitted herewith is a Replacement Sheet for Fig. 2D. Also submitted herewith are executed Declarations by the inventors and a Power of Attorney.

Although no fees are believed to be due with this submission, please charge any underpayment or credit any overpayment to Deposit Account No. 19-1970.

Respectfully submitted,

SHERIDAN ROSS P.C.

By: /Tadd F. Wilson/

Tadd F. Wilson
Registration No. 54544
1560 Broadway, Suite 1200
Denver, Colorado 80202-5141
(303) 863-9700

Date: November 11, 2013

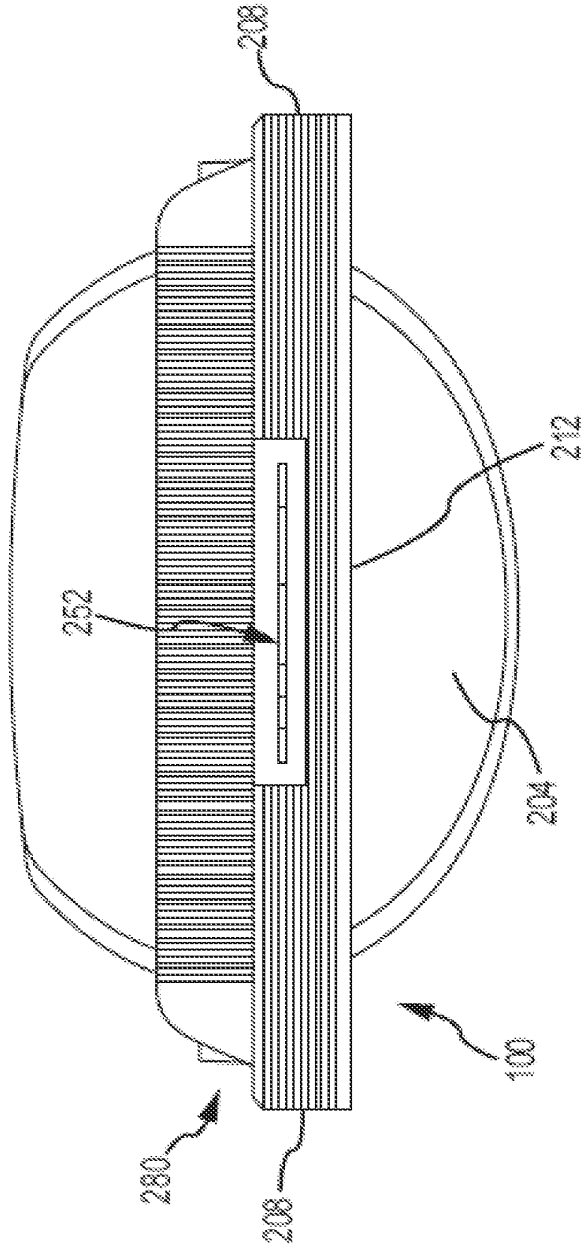

Fig. 2D

Atty. Docket No. 6583-488

PTO/AIA/01 (06-12)
Approved for use through 01/31/2014. OMB 0651-0032
U.S. Patent and Trademark Office; U.S. DEPARTMENT OF COMMERCE
Under the Paperwork Reduction Act of 1995, no persons are required to respond to a collection of information unless it displays a valid OMB control number.

DECLARATION (37 CFR 1.63) FOR UTILITY OR DESIGN APPLICATION USING AN APPLICATION DATA SHEET (37 CFR 1.76)

Title of Invention	PANEL USER INTERFACE FOR AN INTELLIGENT TELEVISION

As the below named inventor, I hereby declare that:

This declaration is directed to:

☐ The attached application, or

☒ United States application or PCT international application number 13/968,665 filed on August 16, 2013.

The above-identified application was made or authorized to be made by me.

I believe that I am the original inventor or an original joint inventor of a claimed invention in the application.

I hereby acknowledge that any willful false statement made in this declaration is punishable under 18 U.S.C. 1001 by fine or imprisonment of not more than five (5) years, or both.

WARNING:

Petitioner/applicant is cautioned to avoid submitting personal information in documents filed in a patent application that may contribute to identity theft. Personal information such as social security numbers, bank account numbers, or credit card numbers (other than a check or credit card authorization form PTO-2038 submitted for payment purposes) is never required by the USPTO to support a petition or an application. If this type of personal information is included in documents submitted to the USPTO, petitioners/applicants should consider redacting such personal information from the documents before submitting them to the USPTO. Petitioner/applicant is advised that the record of a patent application is available to the public after publication of the application (unless a non-publication request in compliance with 37 CFR 1.213(a) is made in the application) or issuance of a patent. Furthermore, the record from an abandoned application may also be available to the public if the application is referenced in a published application or an issued patent (see 37 CFR 1.14). Checks and credit card authorization forms PTO-2038 submitted for payment purposes are not retained in the application file and therefore are not publicly available.

LEGAL NAME OF INVENTOR

Inventor: Sanjiv Sirpal Date (Optional) :

Signature: Sanjiv Sirpal

Note: An application data sheet (PTO/SB/14 or equivalent), including naming the entire inventive entity, must accompany this form or must have been previously filed. Use an additional PTO/AIA/01 form for each additional inventor.

This collection of information is required by 35 U.S.C. 115 and 37 CFR 1.63. The information is required to obtain or retain a benefit by the public which is to file (and by the USPTO to process) an application. Confidentiality is governed by 35 U.S.C. 122 and 37 CFR 1.11 and 1.14. This collection is estimated to take 1 minute to complete, including gathering, preparing, and submitting the completed application form to the USPTO. Time will vary depending upon the individual case. Any comments on the amount of time you require to complete this form and/or suggestions for reducing this burden, should be sent to the Chief Information Officer, U.S. Patent and Trademark Office, U.S. Department of Commerce, P.O. Box 1450, Alexandria, VA 22313-1450. DO NOT SEND FEES OR COMPLETED FORMS TO THIS ADDRESS. **SEND TO: Commissioner for Patents, P.O. Box 1450, Alexandria, VA 22313-1450.**

If you need assistance in completing the form, call 1-800-PTO-9199 and select option 2.

PTO/AIA/01 (06-12)
Approved for use through 01/31/2014. OMB 0651-0032
U.S. Patent and Trademark Office; U.S. DEPARTMENT OF COMMERCE
Under the Paperwork Reduction Act of 1995, no persons are required to respond to a collection of information unless it displays a valid OMB control number.

DECLARATION (37 CFR 1.63) FOR UTILITY OR DESIGN APPLICATION USING AN APPLICATION DATA SHEET (37 CFR 1.76)

Title of Invention	PANEL USER INTERFACE FOR AN INTELLIGENT TELEVISION

As the below named inventor, I hereby declare that:

This declaration is directed to:

☐ The attached application, or

☒ United States application or PCT international application number 13/968,665

filed on August 16, 2013.

The above-identified application was made or authorized to be made by me.

I believe that I am the original inventor or an original joint inventor of a claimed invention in the application.

I hereby acknowledge that any willful false statement made in this declaration is punishable under 18 U.S.C. 1001 by fine or imprisonment of not more than five (5) years, or both.

WARNING:

Petitioner/applicant is cautioned to avoid submitting personal information in documents filed in a patent application that may contribute to identity theft. Personal information such as social security numbers, bank account numbers, or credit card numbers (other than a check or credit card authorization form PTO-2038 submitted for payment purposes) is never required by the USPTO to support a petition or an application. If this type of personal information is included in documents submitted to the USPTO, petitioners/applicants should consider redacting such personal information from the documents before submitting them to the USPTO. Petitioner/applicant is advised that the record of a patent application is available to the public after publication of the application (unless a non-publication request in compliance with 37 CFR 1.213(a) is made in the application) or issuance of a patent. Furthermore, the record from an abandoned application may also be available to the public if the application is referenced in a published application or an issued patent (see 37 CFR 1.14). Checks and credit card authorization forms PTO-2038 submitted for payment purposes are not retained in the application file and therefore are not publicly available.

LEGAL NAME OF INVENTOR

Inventor: Mohammed Selim Date (Optional) :

Signature:

Note: An application data sheet (PTO/SB/14 or equivalent), including naming the entire inventive entity, must accompany this form or must have been previously filed. Use an additional PTO/AIA/01 form for each additional inventor.

This collection of information is required by 35 U.S.C. 115 and 37 CFR 1.63. The information is required to obtain or retain a benefit by the public which is to file (and by the USPTO to process) an application. Confidentiality is governed by 35 U.S.C. 122 and 37 CFR 1.11 and 1.14. This collection is estimated to take 1 minute to complete, including gathering, preparing, and submitting the completed application form to the USPTO. Time will vary depending upon the individual case. Any comments on the amount of time you require to complete this form and/or suggestions for reducing this burden, should be sent to the Chief Information Officer, U.S. Patent and Trademark Office, U.S. Department of Commerce, P.O. Box 1450, Alexandria, VA 22313-1450. DO NOT SEND FEES OR COMPLETED FORMS TO THIS ADDRESS. **SEND TO: Commissioner for Patents, P.O. Box 1450, Alexandria, VA 22313-1450.**

If you need assistance in completing the form, call 1-800-PTO-9199 and select option 2.

PTO/AIA/01 (06-12)
Approved for use through 01/31/2014. OMB 0651-0032
U.S. Patent and Trademark Office; U.S. DEPARTMENT OF COMMERCE
Under the Paperwork Reduction Act of 1995, no persons are required to respond to a collection of information unless it displays a valid OMB control number.

DECLARATION (37 CFR 1.63) FOR UTILITY OR DESIGN APPLICATION USING AN APPLICATION DATA SHEET (37 CFR 1.76)

Title of Invention	PANEL USER INTERFACE FOR AN INTELLIGENT TELEVISION

As the below named inventor, I hereby declare that:

This declaration is directed to:

☐ The attached application, or

☒ United States application or PCT international application number 13/968,665 filed on August 16, 2013.

The above-identified application was made or authorized to be made by me.

I believe that I am the original inventor or an original joint inventor of a claimed invention in the application.

I hereby acknowledge that any willful false statement made in this declaration is punishable under 18 U.S.C. 1001 by fine or imprisonment of not more than five (5) years, or both.

WARNING:

Petitioner/applicant is cautioned to avoid submitting personal information in documents filed in a patent application that may contribute to identity theft. Personal information such as social security numbers, bank account numbers, or credit card numbers (other than a check or credit card authorization form PTO-2038 submitted for payment purposes) is never required by the USPTO to support a petition or an application. If this type of personal information is included in documents submitted to the USPTO, petitioners/applicants should consider redacting such personal information from the documents before submitting them to the USPTO. Petitioner/applicant is advised that the record of a patent application is available to the public after publication of the application (unless a non-publication request in compliance with 37 CFR 1.213(a) is made in the application) or issuance of a patent. Furthermore, the record from an abandoned application may also be available to the public if the application is referenced in a published application or an issued patent (see 37 CFR 1.14). Checks and credit card authorization forms PTO-2038 submitted for payment purposes are not retained in the application file and therefore are not publicly available.

LEGAL NAME OF INVENTOR

Inventor: Saulo Correia Dourado Date (Optional) :

Signature: Saulo Dourado

Note: An application data sheet (PTO/SB/14 or equivalent), including naming the entire inventive entity, must accompany this form or must have been previously filed. Use an additional PTO/AIA/01 form for each additional inventor.

This collection of information is required by 35 U.S.C. 115 and 37 CFR 1.63. The information is required to obtain or retain a benefit by the public which is to file (and by the USPTO to process) an application. Confidentiality is governed by 35 U.S.C. 122 and 37 CFR 1.11 and 1.14. This collection is estimated to take 1 minute to complete, including gathering, preparing, and submitting the completed application form to the USPTO. Time will vary depending upon the individual case. Any comments on the amount of time you require to complete this form and/or suggestions for reducing this burden, should be sent to the Chief Information Officer, U.S. Patent and Trademark Office, U.S. Department of Commerce, P.O. Box 1450, Alexandria, VA 22313-1450. DO NOT SEND FEES OR COMPLETED FORMS TO THIS ADDRESS. **SEND TO: Commissioner for Patents, P.O. Box 1450, Alexandria, VA 22313-1450.**

If you need assistance in completing the form, call 1-800-PTO-9199 and select option 2.

Atty. Docket No. 6583-488

PTO/AIA/01 (06-12)
Approved for use through 01/31/2014. OMB 0651-0032
U.S. Patent and Trademark Office; U.S. DEPARTMENT OF COMMERCE
Under the Paperwork Reduction Act of 1995, no persons are required to respond to a collection of information unless it displays a valid OMB control number.

DECLARATION (37 CFR 1.63) FOR UTILITY OR DESIGN APPLICATION USING AN APPLICATION DATA SHEET (37 CFR 1.76)

Title of Invention	PANEL USER INTERFACE FOR AN INTELLIGENT TELEVISION

As the below named inventor, I hereby declare that:

This declaration is directed to:

☐ The attached application, or

☒ United States application or PCT international application number 13/968,665 filed on August 16, 2013.

The above-identified application was made or authorized to be made by me.

I believe that I am the original inventor or an original joint inventor of a claimed invention in the application.

I hereby acknowledge that any willful false statement made in this declaration is punishable under 18 U.S.C. 1001 by fine or imprisonment of not more than five (5) years, or both.

WARNING:

Petitioner/applicant is cautioned to avoid submitting personal information in documents filed in a patent application that may contribute to identity theft. Personal information such as social security numbers, bank account numbers, or credit card numbers (other than a check or credit card authorization form PTO-2038 submitted for payment purposes) is never required by the USPTO to support a petition or an application. If this type of personal information is included in documents submitted to the USPTO, petitioners/applicants should consider redacting such personal information from the documents before submitting them to the USPTO. Petitioner/applicant is advised that the record of a patent application is available to the public after publication of the application (unless a non-publication request in compliance with 37 CFR 1.213(a) is made in the application) or issuance of a patent. Furthermore, the record from an abandoned application may also be available to the public if the application is referenced in a published application or an issued patent (see 37 CFR 1.14). Checks and credit card authorization forms PTO-2038 submitted for payment purposes are not retained in the application file and therefore are not publicly available.

LEGAL NAME OF INVENTOR

Inventor: Alexander de Paz Date (Optional): Sept 25 2013

Signature: _____

Note: An application data sheet (PTO/SB/14 or equivalent), including naming the entire inventive entity, must accompany this form or must have been previously filed. Use an additional PTO/AIA/01 form for each additional inventor.

This collection of information is required by 35 U.S.C. 115 and 37 CFR 1.63. The information is required to obtain or retain a benefit by the public which is to file (and by the USPTO to process) an application. Confidentiality is governed by 35 U.S.C. 122 and 37 CFR 1.11 and 1.14. This collection is estimated to take 1 minute to complete, including gathering, preparing, and submitting the completed application form to the USPTO. Time will vary depending upon the individual case. Any comments on the amount of time you require to complete this form and/or suggestions for reducing this burden, should be sent to the Chief Information Officer, U.S. Patent and Trademark Office, U.S. Department of Commerce, P.O. Box 1450, Alexandria, VA 22313-1450. DO NOT SEND FEES OR COMPLETED FORMS TO THIS ADDRESS. **SEND TO: Commissioner for Patents, P.O. Box 1450, Alexandria, VA 22313-1450.**

If you need assistance in completing the form, call 1-800-PTO-9199 and select option 2.

PATENT APPLICATION FEE DETERMINATION RECORD

Substitute for Form PTO-875

Application or Docket Number
13/968,665

APPLICATION AS FILED - PART I

FOR	(Column 1) NUMBER FILED	(Column 2) NUMBER EXTRA	SMALL ENTITY RATE($)	SMALL ENTITY FEE($)	OR	OTHER THAN SMALL ENTITY RATE($)	OTHER THAN SMALL ENTITY FEE($)
BASIC FEE (37 CFR 1.16(a), (b), or (c))	N/A	N/A	N/A			N/A	280
SEARCH FEE (37 CFR 1.16(k), (i), or (m))	N/A	N/A	N/A			N/A	600
EXAMINATION FEE (37 CFR 1.16(o), (p), or (q))	N/A	N/A	N/A			N/A	720
TOTAL CLAIMS (37 CFR 1.16(i))	20 minus 20 =	*			OR	x 80 =	0.00
INDEPENDENT CLAIMS (37 CFR 1.16(h))	3 minus 3 =	*				x 420 =	0.00
APPLICATION SIZE FEE (37 CFR 1.16(s))	If the specification and drawings exceed 100 sheets of paper, the application size fee due is $310 ($155 for small entity) for each additional 50 sheets or fraction thereof. See 35 U.S.C. 41(a)(1)(G) and 37 CFR 1.16(s).						0.00
MULTIPLE DEPENDENT CLAIM PRESENT (37 CFR 1.16(j))							0.00
* If the difference in column 1 is less than zero, enter "0" in column 2.			TOTAL			TOTAL	1600

APPLICATION AS AMENDED - PART II

		(Column 1) CLAIMS REMAINING AFTER AMENDMENT		(Column 2) HIGHEST NUMBER PREVIOUSLY PAID FOR	(Column 3) PRESENT EXTRA	SMALL ENTITY RATE($)	SMALL ENTITY ADDITIONAL FEE($)	OR	OTHER THAN SMALL ENTITY RATE($)	OTHER THAN SMALL ENTITY ADDITIONAL FEE($)
AMENDMENT A	Total (37 CFR 1.16(i))	*	Minus	**	=	x =		OR	x =	
AMENDMENT A	Independent (37 CFR 1.16(h))	*	Minus	***	=	x =		OR	x =	
AMENDMENT A	Application Size Fee (37 CFR 1.16(s))									
AMENDMENT A	FIRST PRESENTATION OF MULTIPLE DEPENDENT CLAIM (37 CFR 1.16(j))							OR		
						TOTAL ADD'L FEE		OR	TOTAL ADD'L FEE	

		(Column 1) CLAIMS REMAINING AFTER AMENDMENT		(Column 2) HIGHEST NUMBER PREVIOUSLY PAID FOR	(Column 3) PRESENT EXTRA	RATE($)	ADDITIONAL FEE($)	OR	RATE($)	ADDITIONAL FEE($)
AMENDMENT B	Total (37 CFR 1.16(i))	*	Minus	**	=	x =		OR	x =	
AMENDMENT B	Independent (37 CFR 1.16(h))	*	Minus	***	=	x =		OR	x =	
AMENDMENT B	Application Size Fee (37 CFR 1.16(s))									
AMENDMENT B	FIRST PRESENTATION OF MULTIPLE DEPENDENT CLAIM (37 CFR 1.16(j))							OR		
						TOTAL ADD'L FEE		OR	TOTAL ADD'L FEE	

* If the entry in column 1 is less than the entry in column 2, write "0" in column 3.
** If the "Highest Number Previously Paid For" IN THIS SPACE is less than 20, enter "20".
*** If the "Highest Number Previously Paid For" IN THIS SPACE is less than 3, enter "3".
The "Highest Number Previously Paid For" (Total or Independent) is the highest found in the appropriate box in column 1.

UNITED STATES PATENT AND TRADEMARK OFFICE

UNITED STATES DEPARTMENT OF COMMERCE
United States Patent and Trademark Office
Address: COMMISSIONER FOR PATENTS
P.O. Box 1450
Alexandria, Virginia 22313-1450
www.uspto.gov

APPLICATION NUMBER	FILING or 371(c) DATE	GRP ART UNIT	FIL FEE REC'D	ATTY.DOCKET.NO	TOT CLAIMS	IND CLAIMS
13/968,665	08/16/2013	2425	1740	6583-488	20	3

CONFIRMATION NO. 7370

FILING RECEIPT

111285
Sheridan Ross P.C.
1560 Broadway
Suite 1200
Denver, CO 80202

OC000000063590928

Date Mailed: 09/09/2013

Receipt is acknowledged of this non-provisional patent application. The application will be taken up for examination in due course. Applicant will be notified as to the results of the examination. Any correspondence concerning the application must include the following identification information: the U.S. APPLICATION NUMBER, FILING DATE, NAME OF APPLICANT, and TITLE OF INVENTION. Fees transmitted by check or draft are subject to collection. Please verify the accuracy of the data presented on this receipt. **If an error is noted on this Filing Receipt, please submit a written request for a Filing Receipt Correction. Please provide a copy of this Filing Receipt with the changes noted thereon. If you received a "Notice to File Missing Parts" for this application, please submit any corrections to this Filing Receipt with your reply to the Notice. When the USPTO processes the reply to the Notice, the USPTO will generate another Filing Receipt incorporating the requested corrections**

Inventor(s)

Sanjiv Sirpal, Oakville, CANADA;
Mohammed Selim, Oakville, CANADA;
Saulo Correia Dourado, Oakville, CANADA;
Alexander de Paz, Burlington, CANADA;

Applicant(s)

Flextronics AP, LLC, San Jose, CA

Assignment For Published Patent Application

Flextronics AP, LLC, San Jose, CA

Power of Attorney: None

Domestic Priority data as claimed by applicant

This appln claims benefit of 61/684,672 08/17/2012
and claims benefit of 61/702,650 09/18/2012
and claims benefit of 61/697,710 09/06/2012
and claims benefit of 61/700,182 09/12/2012
and claims benefit of 61/736,692 12/13/2012
and claims benefit of 61/798,821 03/15/2013
and claims benefit of 61/804,942 03/25/2013
and claims benefit of 61/804,998 03/25/2013
and claims benefit of 61/804,971 03/25/2013
and claims benefit of 61/804,990 03/25/2013
and claims benefit of 61/805,003 03/25/2013
and claims benefit of 61/805,053 03/25/2013
and claims benefit of 61/805,030 03/25/2013
and claims benefit of 61/805,027 03/25/2013

and claims benefit of 61/805,042 03/25/2013
and claims benefit of 61/805,038 03/25/2013

Foreign Applications for which priority is claimed (You may be eligible to benefit from the **Patent Prosecution Highway** program at the USPTO. Please see http://www.uspto.gov for more information.) - None.
Foreign application information must be provided in an Application Data Sheet in order to constitute a claim to foreign priority. See 37 CFR 1.55 and 1.76.

If Required, Foreign Filing License Granted: 09/04/2013

The country code and number of your priority application, to be used for filing abroad under the Paris Convention, is **US 13/968,665**

Projected Publication Date: To Be Determined - pending completion of Corrected Papers

Non-Publication Request: No

Early Publication Request: No

Title

PANEL USER INTERFACE FOR AN INTELLIGENT TELEVISION

Preliminary Class

725

Statement under 37 CFR 1.55 or 1.78 for AIA (First Inventor to File) Transition Applications: No

PROTECTING YOUR INVENTION OUTSIDE THE UNITED STATES

Since the rights granted by a U.S. patent extend only throughout the territory of the United States and have no effect in a foreign country, an inventor who wishes patent protection in another country must apply for a patent in a specific country or in regional patent offices. Applicants may wish to consider the filing of an international application under the Patent Cooperation Treaty (PCT). An international (PCT) application generally has the same effect as a regular national patent application in each PCT-member country. The PCT process **simplifies** the filing of patent applications on the same invention in member countries, but **does not result** in a grant of "an international patent" and does not eliminate the need of applicants to file additional documents and fees in countries where patent protection is desired.

Almost every country has its own patent law, and a person desiring a patent in a particular country must make an application for patent in that country in accordance with its particular laws. Since the laws of many countries differ in various respects from the patent law of the United States, applicants are advised to seek guidance from specific foreign countries to ensure that patent rights are not lost prematurely.

Applicants also are advised that in the case of inventions made in the United States, the Director of the USPTO must issue a license before applicants can apply for a patent in a foreign country. The filing of a U.S. patent application serves as a request for a foreign filing license. The application's filing receipt contains further information and guidance as to the status of applicant's license for foreign filing.

Applicants may wish to consult the USPTO booklet, "General Information Concerning Patents" (specifically, the section entitled "Treaties and Foreign Patents") for more information on timeframes and deadlines for filing foreign patent applications. The guide is available either by contacting the USPTO Contact Center at 800-786-9199, or it can be viewed on the USPTO website at http://www.uspto.gov/web/offices/pac/doc/general/index.html.

For information on preventing theft of your intellectual property (patents, trademarks and copyrights), you may wish to consult the U.S. Government website, http://www.stopfakes.gov. Part of a Department of Commerce initiative, this website includes self-help "toolkits" giving innovators guidance on how to protect intellectual property in specific countries such as China, Korea and Mexico. For questions regarding patent enforcement issues, applicants may call the U.S. Government hotline at 1-866-999-HALT (1-866-999-4258).

LICENSE FOR FOREIGN FILING UNDER

Title 35, United States Code, Section 184

Title 37, Code of Federal Regulations, 5.11 & 5.15

GRANTED

The applicant has been granted a license under 35 U.S.C. 184, if the phrase "IF REQUIRED, FOREIGN FILING LICENSE GRANTED" followed by a date appears on this form. Such licenses are issued in all applications where the conditions for issuance of a license have been met, regardless of whether or not a license may be required as set forth in 37 CFR 5.15. The scope and limitations of this license are set forth in 37 CFR 5.15(a) unless an earlier license has been issued under 37 CFR 5.15(b). The license is subject to revocation upon written notification. The date indicated is the effective date of the license, unless an earlier license of similar scope has been granted under 37 CFR 5.13 or 5.14.

This license is to be retained by the licensee and may be used at any time on or after the effective date thereof unless it is revoked. This license is automatically transferred to any related applications(s) filed under 37 CFR 1.53(d). This license is not retroactive.

The grant of a license does not in any way lessen the responsibility of a licensee for the security of the subject matter as imposed by any Government contract or the provisions of existing laws relating to espionage and the national security or the export of technical data. Licensees should apprise themselves of current regulations especially with respect to certain countries, of other agencies, particularly the Office of Defense Trade Controls, Department of State (with respect to Arms, Munitions and Implements of War (22 CFR 121-128)); the Bureau of Industry and Security, Department of Commerce (15 CFR parts 730-774); the Office of Foreign AssetsControl, Department of Treasury (31 CFR Parts 500+) and the Department of Energy.

NOT GRANTED

No license under 35 U.S.C. 184 has been granted at this time, if the phrase "IF REQUIRED, FOREIGN FILING LICENSE GRANTED" DOES NOT appear on this form. Applicant may still petition for a license under 37 CFR 5.12, if a license is desired before the expiration of 6 months from the filing date of the application. If 6 months has lapsed from the filing date of this application and the licensee has not received any indication of a secrecy order under 35 U.S.C. 181, the licensee may foreign file the application pursuant to 37 CFR 5.15(b).

SelectUSA

The United States represents the largest, most dynamic marketplace in the world and is an unparalleled location for business investment, innovation, and commercialization of new technologies. The U.S. offers tremendous resources and advantages for those who invest and manufacture goods here. Through SelectUSA, our nation works to promote and facilitate business investment. SelectUSA provides information assistance to the international investor

community; serves as an ombudsman for existing and potential investors; advocates on behalf of U.S. cities, states, and regions competing for global investment; and counsels U.S. economic development organizations on investment attraction best practices. To learn more about why the United States is the best country in the world to develop technology, manufacture products, deliver services, and grow your business, visit http://www.SelectUSA.gov or call +1-202-482-6800.

UNITED STATES PATENT AND TRADEMARK OFFICE

UNITED STATES DEPARTMENT OF COMMERCE
United States Patent and Trademark Office
Address: COMMISSIONER FOR PATENTS
P.O. Box 1450
Alexandria, Virginia 22313-1450
www.uspto.gov

APPLICATION NUMBER	FILING OR 371(C) DATE	FIRST NAMED APPLICANT	ATTY. DOCKET NO./TITLE
13/968,665	08/16/2013	Sanjiv Sirpal	6583-488

CONFIRMATION NO. 7370

FORMALITIES LETTER

111285
Sheridan Ross P.C.
1560 Broadway
Suite 1200
Denver, CO 80202

OC000000063590929

Date Mailed: 09/09/2013

NOTICE TO FILE CORRECTED APPLICATION PAPERS

Filing Date Granted

An application number and filing date have been accorded to this application. The application is informal since it does not comply with the regulations for the reason(s) indicated below. Applicant is given TWO MONTHS from the date of this Notice within which to correct the informalities indicated below. Extensions of time may be obtained by filing a petition accompanied by the extension fee under the provisions of 37 CFR 1.136(a).

The required item(s) identified below must be timely submitted to avoid abandonment:

- Replacement drawings in compliance with 37 CFR 1.84 and 37 CFR 1.121(d) are required. The drawings submitted are not acceptable because:
  - The drawings are not in compliance with 37 CFR 1.84 because figures 2D contain figure or view numbers that have incorrect orientation. Reference characters, sheet numbers, and view numbers must be oriented in the same direction as the view. See 37 CFR 1.84(p)(1).

Applicant is cautioned that correction of the above items may cause the specification and drawings page count to exceed 100 pages. If the specification and drawings exceed 100 pages, applicant will need to submit the required application size fee.

Items Required To Avoid Processing Delays:

Applicant is notified that the above-identified application contains the deficiencies noted below. No period for reply is set forth in this notice for correction of these deficiencies. However, if a deficiency relates to the inventor's oath or declaration, the applicant must file an oath or declaration in compliance with 37 CFR 1.63, or a substitute statement in compliance with 37 CFR 1.64, executed by or with respect to each actual inventor no later than the expiration of the time period set in the "Notice of Allowability" to avoid abandonment. See 37 CFR 1.53(f).

- A properly executed inventor's oath or declaration has not been received for the following inventor(s):
  Sanjiv Sirpal
  Mohammed Selim
  Saulo Correia Dourado
  Alexander de Paz

  Applicant may submit the inventor's oath or declaration at any time before the Notice of Allowance and Fee(s) Due, PTOL-85, is mailed.

Replies must be received in the USPTO within the set time period or must include a proper Certificate of Mailing or Transmission under 37 CFR 1.8 with a mailing or transmission date within the set time period. For more information and a suggested format, see Form PTO/SB/92 and MPEP 512.

Replies should be mailed to:

Mail Stop Missing Parts
Commissioner for Patents
P.O. Box 1450
Alexandria VA 22313-1450

Registered users of EFS-Web may alternatively submit their reply to this notice via EFS-Web.
https://sportal.uspto.gov/authenticate/AuthenticateUserLocalEPF.html

For more information about EFS-Web please call the USPTO Electronic Business Center at **1-866-217-9197** or visit our website at http://www.uspto.gov/ebc.

If you are not using EFS-Web to submit your reply, you must include a copy of this notice.

/mhteklu/

Office of Data Management, Application Assistance Unit (571) 272-4000, or (571) 272-4200, or 1-888-786-0101

PTO/AIA/14 (03-13)
Approved for use through 01/31/2014. OMB 0651-0032
U.S. Patent and Trademark Office; U.S. DEPARTMENT OF COMMERCE
Under the Paperwork Reduction Act of 1995, no persons are required to respond to a collection of information unless it contains a valid OMB control number.

Application Data Sheet 37 CFR 1.76	Attorney Docket Number	6583-488
	Application Number	
Title of Invention	PANEL USER INTERFACE FOR AN INTELLIGENT TELEVISION	

The application data sheet is part of the provisional or nonprovisional application for which it is being submitted. The following form contains the bibliographic data arranged in a format specified by the United States Patent and Trademark Office as outlined in 37 CFR 1.76.
This document may be completed electronically and submitted to the Office in electronic format using the Electronic Filing System (EFS) or the document may be printed and included in a paper filed application.

Secrecy Order 37 CFR 5.2

☐ Portions or all of the application associated with this Application Data Sheet may fall under a Secrecy Order pursuant to 37 CFR 5.2 (Paper filers only. Applications that fall under Secrecy Order may not be filed electronically.)

Inventor Information:

Inventor 1 Remove

Legal Name

Prefix	Given Name	Middle Name	Family Name	Suffix
	Sanjiv		Sirpal	

Residence Information (Select One) ○ US Residency ◉ Non US Residency ○ Active US Military Service

City	Oakville	Country of Residence i	CA

Mailing Address of Inventor:

Address 1	3264 Stocksbridge Avenue		
Address 2			
City	Oakville	**State/Province**	ON
Postal Code	L6M 0E3	**Country** i	CA

Inventor 2 Remove

Legal Name

Prefix	Given Name	Middle Name	Family Name	Suffix
	Mohammed		Selim	

Residence Information (Select One) ○ US Residency ◉ Non US Residency ○ Active US Military Service

City	Oakville	Country of Residence i	CA

Mailing Address of Inventor:

Address 1	2488 Oakhaven Drive		
Address 2			
City	Oakville	**State/Province**	ON
Postal Code	L6M 4B9	**Country** i	CA

Inventor 3 Remove

Legal Name

Under the Paperwork Reduction Act of 1995, no persons are required to respond to a collection of information unless it contains a valid OMB control number.

Application Data Sheet 37 CFR 1.76	Attorney Docket Number	6583-488
	Application Number	
Title of Invention	PANEL USER INTERFACE FOR AN INTELLIGENT TELEVISION	

Prefix	Given Name	Middle Name	Family Name	Suffix
	Saulo	Correia	Dourado	

Residence Information (Select One) ○ US Residency ◉ Non US Residency ○ Active US Military Service

City	Oakville	Country of Residence i	CA

Mailing Address of Inventor:

Address 1	2420 Ravinebrook Crescent		
Address 2			
City	Oakville	**State/Province**	ON
Postal Code	L6H 6Y2	**Country** i	CA

Inventor 4 Remove

Legal Name

Prefix	Given Name	Middle Name	Family Name	Suffix
	Alexander		de Paz	

Residence Information (Select One) ○ US Residency ◉ Non US Residency ○ Active US Military Service

City	Burlington	Country of Residence i	CA

Mailing Address of Inventor:

Address 1	5444 Valleyhigh Drive		
Address 2			
City	Burlington	**State/Province**	ON
Postal Code	L7L 6Z6	**Country** i	CA

All Inventors Must Be Listed - Additional Inventor Information blocks may be generated within this form by selecting the **Add** button. Add

Correspondence Information:

Enter either Customer Number or complete the Correspondence Information section below.
For further information see 37 CFR 1.33(a).

☐ **An Address is being provided for the correspondence Information of this application.**

Customer Number	111285		
Email Address	flexpatents@sheridanross.com	Add Email	Remove Email

PTO/AIA/14 (03-13)
Approved for use through 01/31/2014. OMB 0651-0032
U.S. Patent and Trademark Office; U.S. DEPARTMENT OF COMMERCE
Under the Paperwork Reduction Act of 1995, no persons are required to respond to a collection of information unless it contains a valid OMB control number.

Application Data Sheet 37 CFR 1.76	Attorney Docket Number	6583-488
	Application Number	
Title of Invention	PANEL USER INTERFACE FOR AN INTELLIGENT TELEVISION	

Application Information:

Title of the Invention	PANEL USER INTERFACE FOR AN INTELLIGENT TELEVISION		
Attorney Docket Number	6583-488	**Small Entity Status Claimed** ☐	
Application Type	Nonprovisional		
Subject Matter	Utility		
Total Number of Drawing Sheets (if any)	40	**Suggested Figure for Publication (if any)**	20A

Publication Information:

☐ Request Early Publication (Fee required at time of Request 37 CFR 1.219)

☐ **Request Not to Publish.** I hereby request that the attached application not be published under 35 U.S.C. 122(b) and certify that the invention disclosed in the attached application **has not and will not** be the subject of an application filed in another country, or under a multilateral international agreement, that requires publication at eighteen months after filing.

Representative Information:

Representative information should be provided for all practitioners having a power of attorney in the application. Providing this information in the Application Data Sheet does not constitute a power of attorney in the application (see 37 CFR 1.32).
Either enter Customer Number or complete the Representative Name section below. If both sections are completed the customer Number will be used for the Representative Information during processing.

Please Select One:	◉ Customer Number	◯ US Patent Practitioner	◯ Limited Recognition (37 CFR 11.9)
Customer Number	111285		

Domestic Benefit/National Stage Information:

This section allows for the applicant to either claim benefit under 35 U.S.C. 119(e), 120, 121, or 365(c) or indicate National Stage entry from a PCT application. Providing this information in the application data sheet constitutes the specific reference required by 35 U.S.C. 119(e) or 120, and 37 CFR 1.78.

Prior Application Status	Pending		Remove
Application Number	Continuity Type	Prior Application Number	Filing Date (YYYY-MM-DD)
	non provisional of	61/684672	2012-08-17
Prior Application Status	Pending		Remove
Application Number	Continuity Type	Prior Application Number	Filing Date (YYYY-MM-DD)
	non provisional of	61/702650	2012-09-18
Prior Application Status	Pending		Remove
Application Number	Continuity Type	Prior Application Number	Filing Date (YYYY-MM-DD)
	non provisional of	61/697710	2012-09-06

Application Data Sheet 37 CFR 1.76	Attorney Docket Number	6583-488
	Application Number	
Title of Invention	PANEL USER INTERFACE FOR AN INTELLIGENT TELEVISION	

Prior Application Status	Pending	Remove	
Application Number	Continuity Type	Prior Application Number	Filing Date (YYYY-MM-DD)
	non provisional of	61/700182	2012-09-12
Prior Application Status	Pending	Remove	
Application Number	Continuity Type	Prior Application Number	Filing Date (YYYY-MM-DD)
	non provisional of	61/736692	2012-12-13
Prior Application Status	Pending	Remove	
Application Number	Continuity Type	Prior Application Number	Filing Date (YYYY-MM-DD)
	non provisional of	61/798821	2013-03-15
Prior Application Status	Pending	Remove	
Application Number	Continuity Type	Prior Application Number	Filing Date (YYYY-MM-DD)
	non provisional of	61/804942	2013-03-25
Prior Application Status	Pending	Remove	
Application Number	Continuity Type	Prior Application Number	Filing Date (YYYY-MM-DD)
	non provisional of	61/804998	2013-03-25
Prior Application Status	Pending	Remove	
Application Number	Continuity Type	Prior Application Number	Filing Date (YYYY-MM-DD)
	non provisional of	61/804971	2013-03-25
Prior Application Status	Pending	Remove	
Application Number	Continuity Type	Prior Application Number	Filing Date (YYYY-MM-DD)
	non provisional of	61/804990	2013-03-25
Prior Application Status	Pending	Remove	
Application Number	Continuity Type	Prior Application Number	Filing Date (YYYY-MM-DD)
	non provisional of	61/805003	2013-03-25
Prior Application Status	Pending	Remove	
Application Number	Continuity Type	Prior Application Number	Filing Date (YYYY-MM-DD)
	non provisional of	61/805053	2013-03-25
Prior Application Status	Pending	Remove	
Application Number	Continuity Type	Prior Application Number	Filing Date (YYYY-MM-DD)
	non provisional of	61/805030	2013-03-25
Prior Application Status	Pending	Remove	
Application Number	Continuity Type	Prior Application Number	Filing Date (YYYY-MM-DD)
	non provisional of	61/805027	2013-03-25
Prior Application Status	Pending	Remove	
Application Number	Continuity Type	Prior Application Number	Filing Date (YYYY-MM-DD)
	non provisional of	61/805042	2013-03-25

Application Data Sheet 37 CFR 1.76	Attorney Docket Number	6583-488
	Application Number	
Title of Invention	PANEL USER INTERFACE FOR AN INTELLIGENT TELEVISION	

Prior Application Status	Pending		Remove
Application Number	Continuity Type	Prior Application Number	Filing Date (YYYY-MM-DD)
	non provisional of	61/805038	2013-03-25
Additional Domestic Benefit/National Stage Data may be generated within this form by selecting the **Add** button.			Add

Foreign Priority Information:

This section allows for the applicant to claim priority to a foreign application. Providing this information in the application data sheet constitutes the claim for priority as required by 35 U.S.C. 119(b) and 37 CFR 1.55(d). When priority is claimed to a foreign application that is eligible for retrieval under the priority document exchange program (PDX) [i] the information will be used by the Office to automatically attempt retrieval pursuant to 37 CFR 1.55(h)(1) and (2). Under the PDX program, applicant bears the ultimate responsibility for ensuring that a copy of the foreign application is received by the Office from the participating foreign intellectual property office, or a certified copy of the foreign priority application is filed, within the time period specified in 37 CFR 1.55(g)(1).

			Remove
Application Number	Country [i]	Filing Date (YYYY-MM-DD)	Access Code [i] (if applicable)
Additional Foreign Priority Data may be generated within this form by selecting the **Add** button.			Add

Statement under 37 CFR 1.55 or 1.78 for AIA (First Inventor to File) Transition Applications

☐ This application (1) claims priority to or the benefit of an application filed before March 16, 2013 and (2) also contains, or contained at any time, a claim to a claimed invention that has an effective filing date on or after March 16, 2013.

Authorization to Permit Access:

☐ Authorization to Permit Access to the Instant Application by the Participating Offices

Under the Paperwork Reduction Act of 1995, no persons are required to respond to a collection of information unless it contains a valid OMB control number.

Application Data Sheet 37 CFR 1.76	Attorney Docket Number	6583-488
	Application Number	
Title of Invention	PANEL USER INTERFACE FOR AN INTELLIGENT TELEVISION	

If checked, the undersigned hereby grants the USPTO authority to provide the European Patent Office (EPO), the Japan Patent Office (JPO), the Korean Intellectual Property Office (KIPO), the World Intellectual Property Office (WIPO), and any other intellectual property offices in which a foreign application claiming priority to the instant patent application is filed access to the instant patent application. See 37 CFR 1.14(c) and (h). This box should not be checked if the applicant does not wish the EPO, JPO, KIPO, WIPO, or other intellectual property office in which a foreign application claiming priority to the instant patent application is filed to have access to the instant patent application.

In accordance with 37 CFR 1.14(h)(3), access will be provided to a copy of the instant patent application with respect to: 1) the instant patent application-as-filed; 2) any foreign application to which the instant patent application claims priority under 35 U.S.C. 119(a)-(d) if a copy of the foreign application that satisfies the certified copy requirement of 37 CFR 1.55 has been filed in the instant patent application; and 3) any U.S. application-as-filed from which benefit is sought in the instant patent application.

In accordance with 37 CFR 1.14(c), access may be provided to information concerning the date of filing this Authorization.

Applicant Information:

Providing assignment information in this section does not substitute for compliance with any requirement of part 3 of Title 37 of CFR to have an assignment recorded by the Office.

Applicant 1 Remove

If the applicant is the inventor (or the remaining joint inventor or inventors under 37 CFR 1.45), this section should not be completed. The information to be provided in this section is the name and address of the legal representative who is the applicant under 37 CFR 1.43; or the name and address of the assignee, person to whom the inventor is under an obligation to assign the invention, or person who otherwise shows sufficient proprietary interest in the matter who is the applicant under 37 CFR 1.46. If the applicant is an applicant under 37 CFR 1.46 (assignee, person to whom the inventor is obligated to assign, or person who otherwise shows sufficient proprietary interest) together with one or more joint inventors, then the joint inventor or inventors who are also the applicant should be identified in this section.

Clear

- (●) Assignee
- ( ) Legal Representative under 35 U.S.C. 117
- ( ) Joint Inventor
- ( ) Person to whom the inventor is obligated to assign.
- ( ) Person who shows sufficient proprietary interest

If applicant is the legal representative, indicate the authority to file the patent application, the inventor is:

Name of the Deceased or Legally Incapacitated Inventor :

If the Applicant is an Organization check here. [X]

Organization Name	Flextronics AP, LLC		
Mailing Address Information:			
Address 1	6201 America Center Drive		
Address 2			
City	San Jose	**State/Province**	CA
Country i	US	Postal Code	95134
Phone Number		Fax Number	

Under the Paperwork Reduction Act of 1995, no persons are required to respond to a collection of information unless it contains a valid OMB control number.

Application Data Sheet 37 CFR 1.76	Attorney Docket Number	6583-488
	Application Number	
Title of Invention	PANEL USER INTERFACE FOR AN INTELLIGENT TELEVISION	

Email Address	

Additional Applicant Data may be generated within this form by selecting the Add button. Add

Non-Applicant Assignee Information:

Providing assignment information in this section does not subsitute for compliance with any requirement of part 3 of Title 37 of CFR to have an assignment recorded by the Office.

Assignee 1

Complete this section only if non-applicant assignee information is desired to be included on the patent application publication in accordance with 37 CFR 1.215(b). Do not include in this section an applicant under 37 CFR 1.46 (assignee, person to whom the inventor is obligated to assign, or person who otherwise shows sufficient proprietary interest), as the patent application publication will include the name of the applicant(s).

Remove

If the Assignee is an Organization check here. ☐

Prefix	**Given Name**	Middle Name	**Family Name**	Suffix

Mailing Address Information:

Address 1			
Address 2			
City		**State/Province**	
Country i		Postal Code	
Phone Number		Fax Number	
Email Address			

Additional Assignee Data may be generated within this form by selecting the Add button. Add

Signature:

Remove

NOTE: This form must be signed in accordance with 37 CFR 1.33. See 37 CFR 1.4 for signature requirements and certifications

Signature	/Kendria E. Pearson/			Date (YYYY-MM-DD)	2013-08-16
First Name	Kendria E.	Last Name	Pearson	Registration Number	70939

Additional Signature may be generated within this form by selecting the Add button. Add

Application Data Sheet 37 CFR 1.76	Attorney Docket Number	6583-488
	Application Number	
Title of Invention	PANEL USER INTERFACE FOR AN INTELLIGENT TELEVISION	

This collection of information is required by 37 CFR 1.76. The information is required to obtain or retain a benefit by the public which is to file (and by the USPTO to process) an application. Confidentiality is governed by 35 U.S.C. 122 and 37 CFR 1.14. This collection is estimated to take 23 minutes to complete, including gathering, preparing, and submitting the completed application data sheet form to the USPTO. Time will vary depending upon the individual case. Any comments on the amount of time you require to complete this form and/or suggestions for reducing this burden, should be sent to the Chief Information Officer, U.S. Patent and Trademark Office, U.S. Department of Commerce, P.O. Box 1450, Alexandria, VA 22313-1450. DO NOT SEND FEES OR COMPLETED FORMS TO THIS ADDRESS. **SEND TO: Commissioner for Patents, P.O. Box 1450, Alexandria, VA 22313-1450.**

Privacy Act Statement

The Privacy Act of 1974 (P.L. 93-579) requires that you be given certain information in connection with your submission of the attached form related to a patent application or patent. Accordingly, pursuant to the requirements of the Act, please be advised that: (1) the general authority for the collection of this information is 35 U.S.C. 2(b)(2); (2) furnishing of the information solicited is voluntary; and (3) the principal purpose for which the information is used by the U.S. Patent and Trademark Office is to process and/or examine your submission related to a patent application or patent. If you do not furnish the requested information, the U.S. Patent and Trademark Office may not be able to process and/or examine your submission, which may result in termination of proceedings or abandonment of the application or expiration of the patent.

The information provided by you in this form will be subject to the following routine uses:

1. The information on this form will be treated confidentially to the extent allowed under the Freedom of Information Act (5 U.S.C. 552) and the Privacy Act (5 U.S.C. 552a). Records from this system of records may be disclosed to the Department of Justice to determine whether the Freedom of Information Act requires disclosure of these records.

2. A record from this system of records may be disclosed, as a routine use, in the course of presenting evidence to a court, magistrate, or administrative tribunal, including disclosures to opposing counsel in the course of settlement negotiations.

3. A record in this system of records may be disclosed, as a routine use, to a Member of Congress submitting a request involving an individual, to whom the record pertains, when the individual has requested assistance from the Member with respect to the subject matter of the record.

4. A record in this system of records may be disclosed, as a routine use, to a contractor of the Agency having need for the information in order to perform a contract. Recipients of information shall be required to comply with the requirements of the Privacy Act of 1974, as amended, pursuant to 5 U.S.C. 552a(m).

5. A record related to an International Application filed under the Patent Cooperation Treaty in this system of records may be disclosed, as a routine use, to the International Bureau of the World Intellectual Property Organization, pursuant to the Patent Cooperation Treaty.

6. A record in this system of records may be disclosed, as a routine use, to another federal agency for purposes of National Security review (35 U.S.C. 181) and for review pursuant to the Atomic Energy Act (42 U.S.C. 218(c)).

7. A record from this system of records may be disclosed, as a routine use, to the Administrator, General Services, or his/her designee, during an inspection of records conducted by GSA as part of that agency's responsibility to recommend improvements in records management practices and programs, under authority of 44 U.S.C. 2904 and 2906. Such disclosure shall be made in accordance with the GSA regulations governing inspection of records for this purpose, and any other relevant (i.e., GSA or Commerce) directive. Such disclosure shall not be used to make determinations about individuals.

8. A record from this system of records may be disclosed, as a routine use, to the public after either publication of the application pursuant to 35 U.S.C. 122(b) or issuance of a patent pursuant to 35 U.S.C. 151. Further, a record may be disclosed, subject to the limitations of 37 CFR 1.14, as a routine use, to the public if the record was filed in an application which became abandoned or in which the proceedings were terminated and which application is referenced by either a published application, an application open to public inspections or an issued patent.

9. A record from this system of records may be disclosed, as a routine use, to a Federal, State, or local law enforcement agency, if the USPTO becomes aware of a violation or potential violation of law or regulation.

PANEL USER INTERFACE FOR AN INTELLIGENT TELEVISION

CROSS REFERENCE TO RELATED APPLICATION

[0001] The present application claims the benefits of and priority, under 35 U.S.C. § 119(e), to U.S. Provisional Application Serial Nos. 61/684,672 filed August 17, 2012, "Smart TV"; 61/702,650 filed September 18, 2012, "Smart TV"; 61/697,710 filed September 6, 2012, "Social TV"; 61/700,182 filed September 12, 2012, "Social TV Roadmap"; 61/736,692 filed December 13, 2012, "SmartTV"; 61/798,821 filed March 15, 2013, "SmartTV"; 61/804,942 filed March 25, 2013, "SmartTV"; 61/804,998 filed March 25, 2013, "SmartTV"; 61/804,971 filed March 25, 2013, "SmartTV"; 61/804,990 filed March 25, 2013, "SmartTV"; 61/805,003 filed March 25, 2013, "SmartTV"; 61/805,053 filed March 25, 2013, "SmartTV"; 61/805,030 filed March 25, 2013, "SmartTV"; 61/805,027 filed March 25, 2013, "SmartTV"; 61/805,042 filed March 25, 2013, "SmartTV"; and 61/805,038 filed March 25, 2013, "SmartTV." Each of the aforementioned documents is incorporated herein by reference in their entirety for all that they teach and for all purposes.

BACKGROUND

[0002] Consolidation of device features or technological convergence is in an increasing trend. Technological convergence describes the tendency for different technological systems to evolve toward performing similar tasks. As people use more devices, the need to carry those devices, charge those devices, update software on those devices, etc. becomes more cumbersome. To compensate for these problems, technology companies have been integrating features from different devices into one or two multi-functional devices. For example, cellular phones are now capable of accessing the Internet, taking photographs, providing calendar functions, etc.

[0003] The consolidation trend is now affecting the design and functionality of devices generally used in the home. For example, audio receivers can access the Internet, digital video recorders can store or provide access to digital photographs, etc. The television in home audio/video systems remains a cornerstone device because the display function cannot be integrated into other devices. As such, consolidating home devices leads to integrating features and functionality into the television. The emergence of the Smart Television (Smart TV) is evidence of the trend to consolidate functionality into the television.

[0004] A Smart TV is generally conceived as a device that integrates access to the Internet and Web 2.0 features into television sets. The Smart TV represents the trend of technological convergence between computers and television sets. The Smart TV generally focuses on online interactive media, Internet TV, on-demand streaming media, and generally does not focus on traditional broadcast media. Unfortunately, most Smart TVs have yet to provide seamless and intuitive user interfaces for navigating and/or executing the various features of the Smart TV. As such, there are still issues with the consolidation of features and the presentation of these features in Smart TVs.

SUMMARY

[0005] There is a need for an Intelligent TV with intuitive user interfaces and with seamless user interaction capability. These and other needs are addressed by the various aspects, embodiments, and/or configurations of the present disclosure. Also, while the disclosure is presented in terms of exemplary embodiments, it should be appreciated that individual aspects of the disclosure can be separately claimed.

[0006] In embodiments, a method of displaying content on a television is provided, comprising: receiving a first directional input via an input device associated with the television; determining, based on a first direction associated with the first directional input, a content panel to display via the television; retrieving, from a memory, a first content information for displaying in the content panel; identifying at least one of a content source and a second content information currently being displayed via the television; selecting a panel type based on the identified at least one of content source and second content information currently being displayed via the television; retrieving, from memory, a third content information based on the selected panel type; and displaying, via the television, the retrieved first content information and the third content information in the content panel based on the selected panel type. This method may further comprise: retrieving, from a memory, a first image that is representative of the at least one of content source and second content information; and displaying, via the television, the first image in the content panel. Further yet, this method may further include: receiving a second directional input via the input device; and determining, based on a second direction associated with the second directional input, a second content panel to display via the television. Alternatively, this method may further comprise: receiving a second directional input via the input device; determining, based on a second direction associated with the second directional input, a source of

at least one content information to be displayed in the content panel based on the selected panel type; retrieving at least a portion of the at least one content information from the determined source; and displaying, via the television, the content information associated with the determined source, wherein the third content information comprises at least one of information associated with content information marked as a favorite and information associated with TV series episode content information. In one embodiment, the content panel is an application panel and the selected panel type is at least one of a search panel and a recommended panel.

[0007] In another embodiment, a non-transitory computer readable information storage medium is provided, the non-transitory computer readable information storage medium having stored thereon instructions that cause a computing system to execute a method of displaying content on a television, comprising: receiving a first directional input via an input device associated with the television; determining, based on a first direction associated with the first directional input, a content panel to display via the television; retrieving, from a memory, a first content information for displaying in the content panel; identifying at least one of a content source and a second content information currently being displayed via the television; selecting a panel type based on the identified at least one of content source and second content information currently being displayed via the television; retrieving, from memory, a third content information based on the selected panel type; and displaying, via the television, the retrieved first content information and the third content information in the content panel based on the selected panel type. These instructions may further comprise: retrieving, from a memory, a first image that is representative of the at least one of content source and second content information; and displaying, via the television, the first image in the content panel. Further yet, these instruction may comprise: receiving a second directional input via the input device; determining, based on a second direction associated with the second directional input, a source of at least one content information to be displayed in the content panel based on the search panel; retrieving at least a portion of the at least one content information from the determined source; and displaying, via the television, the content information associated with the determined source. In some embodiments, the content panel is an application panel. In various embodiments, the third content information comprises at least one of information associated with content information marked as favorite and information associated with TV series episode content information, and

wherein the selected panel type is an info panel associated with the TV series episode content information.

[0008] In yet another embodiment, a system for displaying content on a television is provided, comprising: an input device associated with the television; a memory; and a microprocessor operable to: receive a first directional input via an input device associated with the television; determine, based on a first direction associated with the first directional input, a content panel to display via the television; retrieve, from a memory, a first content information for displaying in the content panel; identify at least one of a content source and a second content information currently being displayed via the television; select a panel type based on the identified at least one of content source and second content information currently being displayed via the television; retrieve, from memory, a third content information based on the selected panel type; and display, via the television, the retrieved first content information and the third content information in the content panel based on the selected panel type. Further yet, the microprocessor may further be operable to retrieve, from a memory, a first image that is representative of the at least one of content source and second content information; and display, via the television, the first image in the content panel. In some embodiments, the microprocessor may further be operable to receive a second directional input via the input device; determine, based on a second direction associated with the second directional input, a source of at least one content information to be displayed in the content panel based on the selected panel type; retrieve at least a portion of the at least one content information from the determined source; and display, via the television, the content information associated with the determined source.

[0009] In one embodiment, the content panel is an application panel and the third content information comprises information associated with content information marked as favorite.

[0010] The present disclosure can provide a number of advantages depending on the particular aspect, embodiment, and/or configuration. For example, the current disclosure provides a panel system that aides in the navigation of an intelligent television. For example, a multi-panel system is provided that satisfies the following: allows a user to watch a primary program while surfing the internet, checking social media, and checking a system error, etc. Moreover, information may be displayed in one content area that specifically depends on or contextually dependent on the primary program or active content area. The panel system allows for a same pattern of navigation—all resulting in a unified experience for a user. In another area, an

application panel is provided that allows quick access to core functionality, provides an unobtrusive design which allows for the active media to always be in view, provides a consistent user experience across all applications, and provides focused contextual content.

[0011] Another advantage is easy navigation in on-demand programming and allowing for consumers' increased demand for multi-sourced content. Thus, the user interface is flexible, reliable, and consistent across different applications.

[0012] The application panel in on demand includes six views (info, new, recommended, genre, favorites, and search). The video on demand interaction framework is flexible so different content providers can populate the content into the views in video on demand by providing a back end data source. Most views in video on demand have multiple components; some components are mandatory and others are optional. Content providers can pick and choose the components that go into each view based on the structure and availability of their media content. Multiple variations within the five categories of panels allow the user a rich, elegant, and intelligent navigational experience.

[0013] The application panel provides customized information in each application. The navigation pattern and content layout remains consistent across all applications. Key benefits of the application panel includes: quick access to core functionality, unobtrusive design allowing the active video to always be in view, consistent user experience across all applications, and focused contextual content.

[0014] As consumers are demanding more access to content, the trend of viewing live and on-demand programming accelerates. The panel system provides quick access to extended functionality while still maintaining visibility into the main content view. The panel system allows the user to continue watching a primary program while surfing, checking social media, checking a system error, etc. The panel system is easy to navigate and contextually relevant, designed to provide quick access to extended functionality while still maintaining visibility into the main content view.

[0015] A favorites panel provides a list of recommendations based on favorites and allows viewers to search and find videos, movies, photos and other content on the web, on cable TV channels, on satellite TV channels, or content stored on a local hard drive. The favorites panel provides easy navigation. The favorites panel is a highlight to the context driven functionality, allowing a user to scroll through a list that he or she has marked as special or favorite. The panel

system provides an elegant and easy list of favorite content. The favorites panel provides a list of user-selected favorite content items. This includes the panel navigation bar and the favorites list. The favorites panel is essentially a running list of a user's favorite content, allowing for easy re-viewing, date checking, sharing, etc. The favorites panel provides a vertical scrollable collection of items that a user has marked as Favorite. It offers a series name and a short description. The info panel for a TV series allows a user to mark a series as a favorite via an episode screen rather than having to go back to view the entire series. A recommended panel is context-based to provide relevant recommendations in a scrollable list to a user. A search panel prior to entering the traditional search panel allows a user to use previous search terms. These and other advantages will be apparent from the disclosure.

[0016] The phrases "at least one", "one or more", and "and/or" are open-ended expressions that are both conjunctive and disjunctive in operation. For example, each of the expressions "at least one of A, B and C", "at least one of A, B, or C", "one or more of A, B, and C", "one or more of A, B, or C" and "A, B, and/or C" means A alone, B alone, C alone, A and B together, A and C together, B and C together, or A, B and C together.

[0017] The term "a" or "an" entity refers to one or more of that entity. As such, the terms "a" (or "an"), "one or more" and "at least one" can be used interchangeably herein. It is also to be noted that the terms "comprising", "including", and "having" can be used interchangeably.

[0018] The term "automatic" and variations thereof, as used herein, refers to any process or operation done without material human input when the process or operation is performed. However, a process or operation can be automatic, even though performance of the process or operation uses material or immaterial human input, if the input is received before performance of the process or operation. Human input is deemed to be material if such input influences how the process or operation will be performed. Human input that consents to the performance of the process or operation is not deemed to be "material."

[0019] A "blog" (a blend of the term ***web log***) is a type of website or part of a website supposed to be updated with new content from time to time. Blogs are usually maintained by an individual with regular entries of commentary, descriptions of events, or other material such as graphics or video. Entries are commonly displayed in reverse-chronological order.

[0020] A "blogging service" is a blog-publishing service that allows private or multi-user blogs with time-stamped entries.

[0021] The term "cable TV" refers to a system of distributing television programs to subscribers via radio frequency (RF) signals transmitted through coaxial cables or light pulses through fiber-optic cables. This contrasts with traditional broadcast television (terrestrial television) in which the television signal is transmitted over the air by radio waves and received by a television antenna attached to the television.

[0022] The term "channel" or "television channel," as used herein, can be a physical or virtual channel over which a television station or television network is distributed. A physical cannel in analog television can be an amount of bandwidth, typically 6, 7, or 8 MHz, that occupies a predetermine channel frequency. A virtual channel is a representation, in cable or satellite television, of a data stream for a particular television media provider (e.g., CDS, TNT, HBO, etc.).

[0023] The term "computer-readable medium," as used herein, refers to any tangible storage and/or transmission medium that participate in providing instructions to a processor for execution. Such a medium may take many forms, including but not limited to, non-volatile media, volatile media, and transmission media. Non-volatile media includes, for example, NVRAM, or magnetic or optical disks. Volatile media includes dynamic memory, such as main memory. Common *form*s of computer-readable media include, for example, a floppy disk, a flexible disk, hard disk, magnetic tape, or any other magnetic medium, magneto-optical medium, a CD-ROM, any other optical medium, punch cards, paper tape, any other physical medium with patterns of holes, a RAM, a PROM, and EPROM, a FLASH-EPROM, a solid state medium like a memory card, any other memory chip or cartridge, a carrier wave as described hereinafter, or any other medium from which a computer can read. A digital file attachment to e-mail or other self-contained information archive or set of archives is considered a distribution medium equivalent to a tangible storage medium. When the computer-readable media is configured as a database, it is to be understood that the database may be any type of database, such as relational, hierarchical, object-oriented, and/or the like. Accordingly, the disclosure is considered to include a tangible storage medium or distribution medium and prior art-recognized equivalents and successor media, in which the software implementations of the present disclosure are stored.

[0024] The term "enhanced television" (ETV) refers to a collection of specifications developed under the OpenCable project of CableLabs (Cable Television Laboratories, Inc.) that define an ETV Application consisting of resources (files) adhering to the Enhanced TV Binary Interchange

Format (EBIF) content format as well as PNG images, JPEG images, and PFR downloadable fonts. An ETV application is normally delivered through an MPEG transport stream and accompanies an MPEG program containing video and audio elementary streams. An "ETV Application" is a collection of resources (files) that include one or more EBIF resources that represent viewable information in the form of pages. Two forms of a given ETV Application may be distinguished: (1) an interchange form and (2) an execution form. The interchange form of an ETV Application consists of the resources (files) that represent the compiled application prior to its actual execution by an ETV User Agent. The execution form of an ETV Application consists of the stored, and possibly mutated forms of these resources while being decoded, presented, and executed by an ETV User Agent. An "ETV User Agent" is a software component that operates on a set-top box, a television, or any other computing environment capable of receiving, decoding, presenting, and processing an ETV Application. This component usually provides, along with its host hardware environment, one or more mechanisms for an end-user to navigate and interact with the multimedia content represented by ETV Applications.

[0025] The term "high-definition television" (HDTV) provides a resolution that is substantially higher than that of standard-definition television. HDTV may be transmitted in various formats, namely 1080p - 1920×1080p: 2,073,600 pixels (approximately 2.1 megapixels) per frame, 1080i (which is typically either 1920×1080i: 1,036,800 pixels (approximately 1 megapixel) per field or 2,073,600 pixels (approximately 2.1 megapixels) per frame or 1440×1080i:[1] 777,600 pixels (approximately 0.8 megapixels) per field or 1,555,200 pixels (approximately 1.6 megapixels) per frame), or 720p - 1280×720p: 921,600 pixels (approximately 0.9 megapixels) per frame. As will be appreciated, "frame size" in pixels is defined as number of horizontal pixels × number of vertical pixels, for example 1280 × 720 or 1920 × 1080. Often the number of horizontal pixels is implied from context and is omitted, as in the case of 720p and 1080p, "scanning system" is identified with the letter "p" for progressive scanning or "i" for interlaced scanning, and "frame rate" is identified as number of video frames per second. For interlaced systems an alternative form of specifying number of fields per second is often used. For purposes of this disclosure, "high-definition television" is deemed to include other high-definition analog or digital video formats, including ultra high definition television.

[0026] The term "internet television" (otherwise known as Internet TV, Online Television, or Online TV) is the digital distribution of television content via the Internet. It should not be

confused with Web television - short programs or videos created by a wide variety of companies and individuals, or Internet protocol television (IPTV) - an emerging internet technology standard for use by television broadcasters. Internet Television is a general term that covers the delivery of television shows and other video content over the internet by video streaming technology, typically by major traditional television broadcasters. It does not describe a technology used to deliver content (see Internet protocol television). Internet television has become very popular through services such as RTÉ Player in Ireland; BBC iPlayer, 4oD, ITV Player (also STV Player and UTV Player) and Demand Five in the United Kingdom; Hulu in the United States; Nederland 24 in the Netherlands; ABC iview and Australia Live TV in Australia; Tivibu in Turkey; and iWanTV! in the Philippines.

[0027] The term "internet protocol television" (IPTV) refers to a system through which television services are delivered using the Internet protocol suite over a packet-switched network such as the Internet, instead of being delivered through traditional terrestrial, satellite signal, and cable television formats. IPTV services may be classified into three main groups, namely live television, with or without interactivity related to the current TV show; time-shifted television: catch-up TV (replays a TV show that was broadcast hours or days ago), start-over TV (replays the current TV show from its beginning); and video on demand (VOD): browse a catalog of videos, not related to TV programming. IPTV is distinguished from Internet television by its on-going standardization process (e.g., European Telecommunications Standards Institute) and preferential deployment scenarios in subscriber-based telecommunications networks with high-speed access channels into end-user premises via set-top boxes or other customer-premises equipment.

[0028] The term "silo," as used herein, can be a logical representation of an input, source, or application. An input can be a device or devices (e.g., DVD, VCR, etc.) electrically connected to the television through a port (e.g., HDMI, video/audio inputs, etc.) or through a network (e.g., LAN WAN, etc.). Rather than a device or devices, the input could be configured as an electrical or physical connection to one or more devices. A source, particularly a content source, can be a data service that provides content (e.g., a media center, a file system, etc.). An application can be a software service that provides a particular type of function (e.g., Live TV, Video on Demand, User Applications, photograph display, etc.). The silo, as a logical representation, can have an associated definition or property, such as a setting, feature, or other characteristic.

[0029] The term "panel," as used herein, can mean a user interface displayed in at least a portion of the display. The panel may be interactive (e.g., accepts user input) or informational (e.g., does not accept user input). A panel may be translucent whereby the panel obscures but does not mask the underlying content being displayed in the display. Panels may be provided in response to a user input from a button or remote control interface.

[0030] The term "screen," as used herein, refers to a physical structure that includes one or more hardware components that provide the device with the ability to render a user interface and/or receive user input. A screen can encompass any combination of gesture capture region, a touch sensitive display, and/or a configurable area. The device can have one or more physical screens embedded in the hardware. However a screen may also include an external peripheral device that may be attached and detached from the device. In embodiments, multiple external devices may be attached to the device. For example, another screen may be included with a remote control unit that interfaces with the Intelligent TV.

[0031] The term "media" of "multimedia," as used herein, refers to content that may assume one of a combination of different content forms. Multimedia can include one or more of, but is not limited to, text, audio, still images, animation, video, or interactivity content forms.

[0032] The term "Intelligent TV," as used herein, refers to a television configured to provide one or more intuitive user interfaces and interactions based on a unique application platform and architecture. The Intelligent TV utilizes processing resources associated with the television to integrate Internet connectivity with parallel application functionality. This integration allows a user the ability to intuitively access various sources of media and content (e.g., Internet, over-the-top content, on-demand streaming media, over-the-air broadcast media, and/or other forms of information) via the Intelligent TV in a quick and efficient manner. Although the Intelligent TV disclosed herein may comprise one or more components of a "smart TV," it is an aspect of the Intelligent TV to provide expanded intuitive user interaction capability for navigating and executing the various features of the television. A "smart TV," sometimes referred to as a connected TV, or hybrid TV (not to be confused with IPTV, Internet TV, or with Web TV), describes a trend of integration of the Internet and Web 2.0 features into television sets and set-top boxes, as well as the technological convergence between computers and these television sets/set-top boxes. The smart TV devices have a higher focus on online interactive media, Internet TV, over-the-top content, as well as on-demand streaming media, and less focus on

traditional broadcast media than traditional television sets and set-top boxes. As can be appreciated, the Intelligent TV encompasses a broader range of technology than that of the smart TV defined above.

[0033] The term "television" is a telecommunication medium, device (or set) or set of associated devices, programming, and/or transmission for transmitting and receiving moving images that can be monochrome (black-and-white) or colored, with or without accompanying sound. Different countries use one of the three main video standards for TVs, namely PAL, NTSC or SECAM. Television is most commonly used for displaying broadcast television signals. The broadcast television system is typically disseminated via radio transmissions on designated channels in the 54–890 MHz frequency band. A common television set comprises multiple internal electronic circuits, including those for receiving and decoding broadcast signals. A visual display device which lacks a tuner is properly called a video monitor, rather than a television. A television may be different from other monitors or displays based on the distance maintained between the user and the television when the user watches the media and based on the inclusion of a tuner or other electronic circuit to receive the broadcast television signal.

[0034] The term "Live TV," as used herein, refers to a television production broadcast in real-time, as events happen, in the present.

[0035] The term "standard-definition television" (SDTV) is a television system that uses a resolution that is not considered to be either high-definition television (HDTV 720p and 1080p) or enhanced-definition television (EDTV 480p). The two common SDTV signal types are 576i, with 576 interlaced lines of resolution, derived from the European-developed PAL and SECAM systems; and 480i based on the American National Television System Committee NTSC system. In the US, digital SDTV is broadcast in the same 4:3 aspect ratio as NTSC signals. However, in other parts of the world that used the PAL or SECAM analog standards, standard-definition television is now usually shown with a 16:9 aspect ratio. Standards that support digital SDTV broadcast include DVB, ATSC, and ISDB. Television signals are transmitted in digital form, and their pixels have a rectangular shape, as opposed to square pixels that are used in modern computer monitors and modern implementations of HDTV. The table below summarizes pixel aspect ratios for various kinds of SDTV video signal. Note that the actual image (be it 4:3 or 16:9) is always contained in the center 704 horizontal pixels of the digital frame, regardless of

how many horizontal pixels (704 or 720) are used. In case of digital video signal having 720 horizontal pixels, only the center 704 pixels contain actual 4:3 or 16:9 image, and the 8 pixel wide stripes from either side are called nominal analogue blanking and should be discarded before displaying the image. Nominal analogue blanking should not be confused with overscan, as overscan areas are part of the actual 4:3 or 16:9 image.

[0036] The term "video on demand (VOD)," as used herein, refers to systems and processes which allow users to select and watch/listen to video or audio content on demand. VOD systems may stream content, to view the content in real time, or download the content to a storage medium for viewing at a later time.

[0037] The term "satellite positioning system receiver" refers to a wireless receiver or transceiver to receive and/or send location signals from and/or to a satellite positioning system, such as the Global Positioning System ("GPS") (US), GLONASS (Russia), Galileo positioning system (EU), Compass navigation system (China), and Regional Navigational Satellite System (India).

[0038] The term "display," as used herein, refers to at least a portion of a screen used to display the output of the television to a user. A display may be a single-screen display or a multi-screen display, referred to as a composite display. A composite display can encompass the touch sensitive display of one or more screens. A single physical screen can include multiple displays that are managed as separate logical displays. Thus, different content can be displayed on the separate displays although part of the same physical screen.

[0039] The term "displayed image," as used herein, refers to an image produced on the display. A typical displayed image is a television broadcast or menu. The displayed image may occupy all or a portion of the display.

[0040] The term "display orientation," as used herein, refers to the way in which a rectangular display is oriented by a user for viewing. The two most common types of display orientation are portrait and landscape. In landscape mode, the display is oriented such that the width of the display is greater than the height of the display (such as a 4:3 ratio, which is 4 units wide and 3 units tall, or a 16:9 ratio, which is 16 units wide and 9 units tall). Stated differently, the longer dimension of the display is oriented substantially horizontal in landscape mode while the shorter dimension of the display is oriented substantially vertical. In the portrait mode, by contrast, the display is oriented such that the width of the display is less than the height of the display. Stated

differently, the shorter dimension of the display is oriented substantially horizontal in the portrait mode while the longer dimension of the display is oriented substantially vertical.

[0041] The term "module," as used herein, refers to any known or later developed hardware, software, firmware, artificial intelligence, fuzzy logic, or combination of hardware and software that is capable of performing the functionality associated with that element.

[0042] The terms "determine," "calculate," and "compute," and variations thereof, as used herein, are used interchangeably and include any type of methodology, process, mathematical operation, or technique.

[0043] The term "touch screen" or "touchscreen" refer to screen that can receive user contact or other tactile input, such as a stylus. The touch screen may sense user contact in a number of different ways, such as by a change in an electrical parameter (e.g., resistance or capacitance), acoustic wave variations, infrared radiation proximity detection, light variation detection, and the like. In a resistive touch screen, for example, normally separated conductive and resistive metallic layers in the screen pass an electrical current. When a user touches the screen, the two layers make contact in the contacted location, whereby a change in electrical field is noted and the coordinates of the contacted location calculated. In a capacitive touch screen, a capacitive layer stores electrical charge, which is discharged to the user upon contact with the touch screen, causing a decrease in the charge of the capacitive layer. The decrease is measured, and the contacted location coordinates determined. In a surface acoustic wave touch screen, an acoustic wave is transmitted through the screen, and the acoustic wave is disturbed by user contact. A receiving transducer detects the user contact instance and determines the contacted location coordinates.

[0044] The term "web television" is original television content produced for broadcast via the World Wide Web. Some major distributors of web television are YouTube, Myspace, Newgrounds, Blip.tv, and Crackle.

[0045] The terms "instant message" and "instant messaging" refer to a form of real-time text communication between two or more people, typically based on typed text.

[0046] The term "internet search engine" refers to a web search engine designed to search for information on the World Wide Web and FTP servers. The search results are generally presented in a list of results often referred to as SERPS, or "search engine results pages". The information may consist of web pages, images, information, and other types of files. Some

search engines also mine data available in databases or open directories. Web search engines work by storing information about many web pages, which they retrieve from the html itself. These pages are retrieved by a Web crawler (sometimes also known as a spider)—an automated Web browser which follows every link on the site. The contents of each page are then analyzed to determine how it should be indexed (for example, words are extracted from the titles, headings, or special fields called meta tags). Data about web pages are stored in an index database for use in later queries. Some search engines, such as Google™, store all or part of the source page (referred to as a cache) as well as information about the web pages, whereas others, such as AltaVista™, store every word of every page they find.

[0047] The terms "online community," "e-community," and "virtual community" mean a group of people that primarily interact via a computer network, rather than face to face, for social, professional, educational, or other purposes. The interaction can use a variety of media formats, including wikis, blogs, chat rooms, Internet forums, instant messaging, email, and other forms of electronic media. Many media formats are used in social software separately or in combination, including text-based chatrooms and forums that use voice, video text, or avatars.

[0048] The term "remote control" refers to a component of an electronics device, most commonly a television set, DVD player and/or home theater system for operating the device wirelessly, typically from a short line-of-sight distance. Remote control normally uses infrared and/or radio frequency (RF) signaling and can include WiFi, wireless USB, Bluetooth™ connectivity, motion sensor enabled capabilities and/or voice control. A touchscreen remote control is a handheld remote control device which uses a touchscreen user interface to replace most of the hard, built-in physical buttons used in normal remote control devices.

[0049] The term "satellite TV" refers to television programming delivered by the means of communication satellites and received by an outdoor antenna, usually a parabolic reflector generally referred to as a satellite dish, and as far as household usage is concerned, a satellite receiver either in the form of an external set-top box or a satellite tuner module built into a TV set.

[0050] The term "social network service" is a service provider that builds online communities of people, who share interests and/or activities, or who are interested in exploring the interests and activities of others. Most social network services are web-based and provide a variety of ways for users to interact, such as e-mail and instant messaging services.

[0051] The term "social network" refers to a web-based social network.

[0052] The term "gesture" refers to a user action that expresses an intended idea, action, meaning, result, and/or outcome. The user action can include manipulating a device (e.g., opening or closing a device, changing a device orientation, moving a trackball or wheel, etc.), movement of a body part in relation to the device, movement of an implement or tool in relation to the device, audio inputs, etc. A gesture may be made on a device (such as on the screen) or with the device to interact with the device.

[0053] The term "gesture capture" refers to a sense or otherwise a detection of an instance and/or type of user gesture. The gesture capture can occur in one or more areas of the screen. A gesture region can be on the display, where it may be referred to as a touch sensitive display or off the display where it may be referred to as a gesture capture area.

[0054] The term "electronic address" refers to any contactable address, including a telephone number, instant message handle, e-mail address, Universal Resource Locator (URL), Universal Resource Identifier (URI), Address of Record (AOR), electronic alias in a database, like addresses, and combinations thereof.

[0055] It shall be understood that the term "means," as used herein, shall be given its broadest possible interpretation in accordance with 35 U.S.C., Section 112(f). Accordingly, a claim incorporating the term "means" shall cover all structures, materials, or acts set forth herein, and all of the equivalents thereof. Further, the structures, materials or acts and the equivalents thereof shall include all those described in the summary of the invention, brief description of the drawings, detailed description, abstract, and claims themselves.

[0056] The preceding is a simplified summary of the disclosure to provide an understanding of some aspects of the disclosure. This summary is neither an extensive nor exhaustive overview of the disclosure and its various aspects, embodiments, and/or configurations. It is intended neither to identify key or critical elements of the disclosure nor to delineate the scope of the disclosure but to present selected concepts of the disclosure in a simplified form as an introduction to the more detailed description presented below. As will be appreciated, other aspects, embodiments, and/or configurations of the disclosure are possible utilizing, alone or in combination, one or more of the features set forth above or described in detail below.

BRIEF DESCRIPTION OF THE DRAWINGS

[0057] Fig. 1A includes a first view of an embodiment of an environment of an intelligent television;

[0058] Fig. 1B includes a second view of an embodiment of an environment of an intelligent television;

[0059] Fig. 2A includes a first view of an embodiment of an intelligent television;

[0060] Fig. 2B includes a second view of an embodiment of an intelligent television;

[0061] Fig. 2C includes a third view of an embodiment of an intelligent television;

[0062] Fig. 2D includes a fourth view of an embodiment of an intelligent television;

[0063] Fig. 3 is a block diagram of an embodiment of the hardware of an intelligent television;

[0064] Fig. 4 is a block diagram of an embodiment of the intelligent television software and/or firmware;

[0065] Fig. 5 is a second block diagram of an embodiment of the intelligent television software and/or firmware;

[0066] Fig. 6 is a third block diagram of an embodiment of the intelligent television software and/or firmware;

[0067] Fig. 7 is a plan view of an embodiment of a handheld remote control;

[0068] Fig. 8 is a side view of an embodiment of a remote control;

[0069] Fig. 9A is a bottom view of an embodiment of a remote control with a joystick in a neutral position;

[0070] Fig. 9B is a bottom view of an embodiment of a remote control with the joystick in a lower position;

[0071] Fig. 9C is a bottom view of an embodiment of a remote control with the joystick in an upper position;

[0072] Fig. 10 is a plan view of another embodiment of a handheld remote control;

[0073] Fig. 11A is a front view of an embodiment of an Intelligent TV screen;

[0074] Fig. 11B is a front view of an embodiment of an Intelligent TV screen;

[0075] Fig. 11C is a front view of an embodiment of an Intelligent TV screen;

[0076] Fig. 12 is a block diagram of an embodiment of a handheld remote control of either Fig. 7 or 10;

[0077] Fig. 13 is a block diagram of an embodiment of a content data service;

[0078] Fig. 14 is a first panel view of an embodiment of an intelligent television;

[0079] Fig. 15 illustrates a layout consistent with at least one embodiment of the present disclosure;

[0080] Fig. 16A is a second panel view in accordance with embodiments of the present disclosure;

[0081] Fig. 16B is a third panel view in accordance with embodiments of the present disclosure;

[0082] Fig. 16C is a fourth panel view in accordance with embodiments of the present disclosure;

[0083] Figs. 17A-17B illustrates one or more panel types in accordance with embodiments of the present disclosure;

[0084] Fig. 18 illustrates a fifth panel view in accordance with embodiments of the present disclosure;

[0085] Fig. 19A illustrates a sixth panel view in accordance with embodiments of the present disclosure;

[0086] Fig. 19B illustrates a content view in accordance with at least one embodiment of the present disclosure;

[0087] Fig. 20A illustrates a second content view in accordance with at least one embodiment of the present disclosure;

[0088] Figs. 20B-20C illustrate a layout and display of content in accordance with embodiments of the present disclosure;

[0089] Fig. 20D illustrates a layout and display of content in accordance with embodiments of the present disclosure;

[0090] Fig. 21A illustrates a seventh panel view in accordance with embodiments of the present disclosure;

[0091] Fig. 21B illustrates an eighth panel view in accordance with embodiments of the present disclosure;

[0092] Fig. 22 illustrates a ninth panel view in accordance with embodiments of the present disclosure;

[0093] Fig. 23 is a flow diagram depicting a content panel and panel type selection process in accordance with embodiments of the present disclosure;

[0094] Fig. 24 is a second flow diagram depicting a content panel and panel type selection process in accordance with embodiments of the present disclosure;

[0095] Fig. 25 is a flow diagram depicting an info panel presentation method in accordance with embodiments of the present disclosure; and

[0096] Fig. 26 is a flow diagram depicting an information panel presentation method in accordance with embodiments of the present disclosure.

[0097] In the appended figures, similar components and/or features may have the same reference label. Further, various components of the same type may be distinguished by following the reference label by a letter that distinguishes among the similar components. If only the first reference label is used in the specification, the description is applicable to any one of the similar components having the same first reference label irrespective of the second reference label.

DETAILED DESCRIPTION

[0098] Presented herein are embodiments of a device. The device can be a network-enabled telecommunications device, such as a television, an electronic visual display device, or other smart device. The device can include one or more screens, or sections of a screen, that are configured to receive and present information from a number of sources. Further, the device can receive user input in unique ways. The overall design and functionality of the device provides for an enhanced user experience making the device more useful and more efficient.

[0099] Intelligent Television (TV) Environment:

[0100] Referring to Figs. 1A and 1B, an Intelligent TV, or device, 100 is shown. It is anticipated that the Intelligent TV 100 may be used for entertainment, business applications, social interaction, content creation and/or consumption, and to organize and control one or more other devices that are in communication with the Intelligent TV 100. As can be appreciated, the Intelligent TV 100 can be used to enhance the user interactive experience whether at home or at work.

[0101] In some embodiments, the Intelligent TV 100 may be configured to receive and understand a variety of user and/or device inputs. For example, a user may interface with the Intelligent TV 100 via one or more physical or electrical controls, such as buttons, switches, touch sensitive screens/regions (e.g., capacitive touch, resistive touch, etc.), and/or other controls associated with the Intelligent TV 100. In some cases, the Intelligent TV 100 may include the

one or more interactive controls. Additionally or alternatively, the one or more controls may be associated with a remote control. The remote control may communicate with the Intelligent TV 100 via wired and/or wireless signals. As can be appreciated, the remote control may operate via radio frequency (RF), infrared (IR), and/or a specific wireless communications protocol (e.g., Bluetooth™, Wi-Fi, etc.). In some cases, the controls, whether physical or electrical, may be configured (e.g., programmed) to suit a user's preferences.

[0102] Additionally or alternatively, smart phones, tablets, computers, laptops, netbooks, and other smart devices may be used to control the Intelligent TV 100. For example, control of the Intelligent TV 100 may be achieved via an application running on a smart device. The application may be configured to present a user with various Intelligent TV 100 controls in an intuitive user interface (UI) on a screen associated with the device 100. The screen may be a touch sensitive, or touch screen, display. Selections input by a user via the UI may be configured to control the Intelligent TV 100 by the application accessing one or more communication features associated with the smart device.

[0103] It is anticipated that the Intelligent TV 100 can receive input via various input devices including, but in no way limited to, video, audio, radio, light, tactile, and combinations thereof. Among other things, these input devices may be configured to allow the Intelligent TV 100 to see, recognize, and react to user gestures. For instance, a user may talk to the Intelligent TV 100 in a conversational manner. The Intelligent TV 100 may hear and understand voice commands in a manner similar to a smart device's intelligent personal assistant and voice-controlled navigator application (e.g., Apple's Siri, Android's Skyvi, Robin, Iris, and other applications).

[0104] The Intelligent TV 100 may also be a communications device which can establish network connections 104 through many alternate means, including wired 108 or wireless 112 means, over cellular networks 116 to connect via cellular base antenna 142 to telephone networks operated by a telephone company 146, and by using a telephone line 120 to connect to telephone networks operated by telephone company 146. These connections 104 enable the Intelligent TV 100 to access one or more communication networks 132. The communication networks may comprise any type of known communication medium or collection of communication media and may use any type of protocols to transport messages or signals between endpoints. The communication networks may include wired and/or wireless communication technologies. The Internet is an example of a communication network 132 that

constitutes an Internet Protocol (IP) network consisting of many computers, computing networks, and other communication devices located all over the world, which are connected through many telephone systems and other means.

[0105] Other examples of the communication network 132 include, without limitation, a standard Plain Old Telephone System (POTS), an Integrated Services Digital Network (ISDN), the Public Switched Telephone Network (PSTN), a Local Area Network (LAN), a Wide Area Network (WAN), a cellular network, and any other type of packet-switched or circuit-switched network known in the art. In addition, it can be appreciated that the communication network 132 need not be limited to any one network type, and instead may be comprised of a number of different networks and/or network types.

[0106] In some embodiments, the Intelligent TV 100 may be equipped with multiple communication means. The multiple communication means may allow the Intelligent TV 100 to communicate across Local Area Networks (LANs) 124, wireless local area networks (WLANs) 128, and other networks 132. The networks 132 may be connected in a redundant manner to ensure network access. In other words, if one connection is interrupted, the Intelligent TV 100 can use an alternate communications path to reestablish and/or maintain the network connection 104. Among other things, the Intelligent TV 100 may use these network connections 104 to send and receive information, interact with an electronic program guide (EPG) 136, receive software updates 140, contact customer service 144 (e.g., to receive help or service, etc.), and/or access remotely stored digital media libraries 148. In addition, these connections can allow the Intelligent TV 100 to make phone calls, send and/or receive email messages, send and/or receive text messages (such as email and instant messages), surf the Internet using an internet search engine, post blogs by a blogging service, and connect/interact with social media sites and/or an online community (e.g., Facebook™, Twitter™, LinkedIn™, Pinterest™, Google+™, MySpace™, and the like) maintained by a social network service. In combination with other components of the Intelligent TV 100 described in more detail below, these network connections 104 also enable the Intelligent TV 100 to conduct video teleconferences, electronic meetings, and other communications. The Intelligent TV 100 may capture and store images and sound, using associated cameras, microphones, and other sensors. Additionally or alternatively, the Intelligent TV 100 may create and save screen shots of media, images, and data displayed on a screen associated with the Intelligent TV 100.

[0107] Further, as shown in Fig. 1B, the Intelligent TV 100 can interact with other electronic devices 168 by either by the wired 108 and/or wireless 112 connections. As described herein, components of the Intelligent TV 100 allow the device 100 to be connected to devices 168 including, but not limited to, DVD players 168a, BluRay players 168b, portable digital media devices 168c, smart phones 168d, tablet devices 168e, personal computers 168f, external cable boxes 168g, keyboards 168h, pointing devices 168i, printers 168j, game controllers and/or game pads 168k, satellite dishes 168l, external display devices 168m, and other universal serial bus (USB), local area network (LAN), Bluetooth™, or high-definition multimedia interface (HDMI) compliant devices, and/or wireless devices. When connected to an external cable box 168g or satellite dish 168l, the Intelligent TV 100 can access additional media content. Also, as further described below, the Intelligent TV 100 is capable of receiving digital and/or analog signals broadcast by TV stations. The Intelligent TV 100 can be configured as one or more of a standard-definition television, enhanced television, and high-definition television. It may operate as one or more of cable, Internet, Internet Protocol, satellite, web, and/or smart television. The Intelligent TV 100 may also be used to control the operation of, and may interface with, other smart components such as security systems 172, door/gate controllers 176, remote video cameras 180, lighting systems 184, thermostats 188, refrigerators 192, and other appliances.

[0108] Intelligent TV:

[0109] Figs. 2A-2D illustrate components of the Intelligent TV 100. In general, as shown by Fig. 2A, the Intelligent TV 100 can be supported by a removable base or stand 204 that is attached to a frame 208. The frame 208 surrounds edges of a display screen 212, leaving a front surface of the display screen 212 uncovered. The display screen 212 may comprise a Liquid Crystal Display (LCD) screen, a plasma screen, Light Emitting Diode (LED) screen, or other screen types. In embodiments, the entire front surface of the screen 212 may be touch sensitive and capable of receiving input by the user touching the front surface of the screen 212.

[0110] The Intelligent TV 100 may include integrated speakers 216 and at least one microphone 220. A first area of the frame 208 may comprise a horizontal gesture capture region 224 and second areas comprise vertical gesture capture regions 228. The gesture capture regions 224, 228 may comprise areas or regions that are capable of receiving input by recognizing gestures made by the user, and in some examples, without the need for the user to actually touch

the screen 212 surface of the Intelligent TV 100. However, the gesture capture regions 224, 228 may not include pixels that can perform a display function or capability.

[0111] One or more image capture devices 232, such as a camera, can be included for capturing still and/or video images. The image capture device 232 can include or be associated with additional elements, such as a flash or other light source 236 and a range finding device 240 to assist focusing of the image capture device. In addition, the microphone 220, gesture capture regions 224, 228, image capture device 232, and range finding device 240 may be used by the Intelligent TV 100 to recognize individual users. Additionally or alternatively, the Intelligent TV 100 may learn and remember preferences associated with the individual users. In some embodiments, the learning and remembering (i.e., identifying and recalling stored information) may be associated with the recognition of a user.

[0112] An IR transmitter and receiver 244 may also be provided to connect the Intelligent TV 100 with a remote control device (not shown) or other IR devices. Additionally or alternatively, the remote control device may transmit wireless signals via RF, light, and/or a means other than IR. Also shown in Fig. 2A is an audio jack 248, which may be hidden behind a panel that is hinged or removable. The audio jack 248 accommodates a tip, ring, sleeve (TRS) connector, for example, to allow the user to utilize headphones, a headset, or other external audio equipment.

[0113] The Intelligent TV 100 can also include a number of buttons 252. For example, Fig. 2A illustrates the buttons 252 on the top of the Intelligent TV 100, although the buttons could be placed at other locations. As shown, the Intelligent TV 100 includes six buttons 252a-f, which can be configured for specific inputs. For example, the first button 252a may be configured as an on/off button used to control overall system power to the Intelligent TV 100. The buttons 252 may be configured, in combination or alone, to control a number of aspects of the Intelligent TV 100. Some non-limiting examples include, but are not limited to, overall system volume, brightness, the image capture device, the microphone, and initiation/termination of a video conference. Instead of separate buttons, two of the buttons may be combined into a rocker button. This rocker button arrangement may be useful in situations where the buttons are configured to control features such as volume or brightness. In some embodiments, one or more of the buttons 252 are capable of supporting different user commands. By way of example, a normal press has a duration commonly of less than about 1 second and resembles a quick input. A medium press has a duration commonly of 1 second or more but less than about 12 seconds.

A long press has a duration commonly of about 12 seconds or more. The function of the buttons is normally specific to the application that is active on the Intelligent TV 100. In the video conference application for instance and depending on the particular button, a normal, medium, or long press can mean end the video conference, increase or decrease the volume, increase a rate speed associated with a response to an input, and toggle microphone mute. Depending on the particular button, a normal, medium, or long press can also control the image capture device 232 to increase zoom, decrease zoom, take a photograph, or record video.

[0114] In support of communications functions or capabilities, the Intelligent TV 100 can include one or more shared or dedicated antennae 256 and wired broadband connections 260 as shown in Fig. 2B. The antennae 256 also enable the Intelligent TV 100 to receive digital and/or analog broadcast TV channels. The wired broadband connections 260 are, for example, a Digital Subscriber Line (DSL), an optical line, an Ethernet port, an IEEE 1394 interface, or other interfaces. The Intelligent TV 100 also has a telephone line jack 262 to further provide communications capability.

[0115] In addition to the removable base 204, the Intelligent TV 100 may include hardware and mounting points 264 on a rear surface to facilitate mounting the Intelligent TV 100 to a surface, such as a wall. In one example, the Intelligent TV 100 may incorporate at least one Video Equipment Standards Association (VESA) mounting interface for attaching the device 100 to the surface.

[0116] As shown in Fig. 2C, the Intelligent TV 100 may include docking interfaces or ports 268. The docking ports 268 may include proprietary or universal ports to support the interconnection of the Intelligent TV 100 to other devices or components, which may or may not include additional or different capabilities from those integral to the Intelligent TV 100. In addition to supporting an exchange of communication signals between the Intelligent TV 100 and a connected device or component, the docking ports 268 can support the supply of power to the connected device or component. The docking ports 268 can also comprise an intelligent element that comprises a docking module for controlling communications or other interactions between the Intelligent TV 100 and the connected device or component.

[0117] The Intelligent TV 100 also includes a number of card slots 272 and network or peripheral interface ports 276. The card slots 272 may accommodate different types of cards including subscriber identity modules (SIM), secure digital (SD) cards, MiniSD cards, flash

memory cards, and other cards. Ports 276 in embodiments may include input/output (I/O) ports, such as universal serial bus (USB) ports, parallel ports, game ports, and high-definition multimedia interface (HDMI) connectors.

[0118] An audio/video (A/V) I/O module 280 can be included to provide audio to an interconnected speaker or other device, and to receive audio input from a connected microphone or other device. As an example, the audio input/output interface 280 may comprise an associated amplifier and analog-to-digital converter.

[0119] Hardware Features:

[0120] Fig. 3 illustrates components of a Intelligent TV 100 in accordance with embodiments of the present disclosure. In general, the Intelligent TV 100 includes a primary screen 304. Screen 304 can be a touch sensitive screen and can include different operative areas.

[0121] For example, a first operative area, within the screen 304, may comprise a display 310. In some embodiments, the display 310 may be touch sensitive. In general, the display 310 may comprise a full color, display.

[0122] A second area within the screen 304 may comprise a gesture capture region 320. The gesture capture region 320 may comprise an area or region that is outside of the display 310 area, and that is capable of receiving input, for example in the form of gestures provided by a user. However, the gesture capture region 320 does not include pixels that can perform a display function or capability.

[0123] A third region of the screen 304 may comprise a configurable area 312. The configurable area 312 is capable of receiving input and has display or limited display capabilities. In embodiments, the configurable area 312 may present different input options to the user. For example, the configurable area 312 may display buttons or other relatable items. Moreover, the identity of displayed buttons, or whether any buttons are displayed at all within the configurable area 312 of a screen 304, may be determined from the context in which the Intelligent TV 100 is used and/or operated.

[0124] In an exemplary touch sensitive screen 304 embodiment, the touch sensitive screen 304 comprises a liquid crystal display extending across at least those regions of the touch sensitive screen 304 that are capable of providing visual output to a user, and a capacitive input matrix over those regions of the touch sensitive screen 304 that are capable of receiving input from the user.

[0125] One or more display controllers 316 may be provided for controlling the operation of the screen 304. The display controller 316 may control the operation of the touch sensitive screen 304, including input (touch sensing) and output (display) functions. The display controller 316 may also control the operation of the screen 304 and may interface with other inputs, such as infrared and/or radio input signals (e.g., door/gate controllers, alarm system components, etc.). In accordance with still other embodiments, the functions of a display controller 316 may be incorporated into other components, such as a processor 364.

[0126] The processor 364 may comprise a general purpose programmable processor or controller for executing application programming or instructions. In accordance with at least some embodiments, the processor 364 may include multiple processor cores, and/or implement multiple virtual processors. In accordance with still other embodiments, the processor 364 may include multiple physical processors. As a particular example, the processor 364 may comprise a specially configured application specific integrated circuit (ASIC) or other integrated circuit, a digital signal processor, a controller, a hardwired electronic or logic circuit, a programmable logic device or gate array, a special purpose computer, or the like. The processor 364 generally functions to run programming code or instructions implementing various functions of the Intelligent TV 100.

[0127] In support of connectivity functions or capabilities, the Intelligent TV 100 can include a module for encoding/decoding and/or compression/decompression 366 for receiving and managing digital television information. Encoding/decoding compression/decompression module 366 enables decompression and/or decoding of analog and/or digital information dispatched by a public television chain or in a private television network and received across antenna 324, I/O module 348, wireless connectivity module 328, and/or other wireless communications module 332. The television information may be sent to screen 304 and/or attached speakers receiving analog or digital reception signals. Any encoding/decoding and compression/decompression is performable on the basis of various formats (e.g., audio, video, and data). Encrypting module 368 is in communication with encoding/decoding compression/decompression module 366 and enables the confidentiality of all the data received or transmitted by the user or supplier.

[0128] In support of communications functions or capabilities, the Intelligent TV 100 can include a wireless connectivity module 328. As examples, the wireless connectivity module 328

can comprise a GSM, CDMA, FDMA, and/or analog cellular telephony transceiver capable of supporting voice, multimedia, and/or data transfers over a cellular network. Alternatively or additionally, the Intelligent TV 100 can include an additional or other wireless communications module 332. As examples, the other wireless communications module 332 can comprise a Wi-Fi, Blutooth™, WiMax, infrared, or other wireless communications link. The wireless connectivity module 328 and the other wireless communications module 332 can each be associated with a shared or a dedicated antenna 324 and a shared or dedicated I/O module 348.

[0129] An input/output module 348 and associated ports may be included to support communications over wired networks or links, for example with other communication devices, server devices, and/or peripheral devices. Examples of an input/output module 348 include an Ethernet port, a Universal Serial Bus (USB) port, Thunderbolt™ or Light Peak interface, Institute of Electrical and Electronics Engineers (IEEE) 1394 port, or other interface.

[0130] An audio input/output interface/device(s) 344 can be included to provide analog audio to an interconnected speaker or other device, and to receive analog audio input from a connected microphone or other device. As an example, the audio input/output interface/device(s) 344 may comprise an associated amplifier and analog-to-digital converter. Alternatively or in addition, the Intelligent TV 100 can include an integrated audio input/output device 356 and/or an audio jack for interconnecting an external speaker or microphone. For example, an integrated speaker and an integrated microphone can be provided, to support near talk or speaker phone operations.

[0131] A port interface 352 may be included. The port interface 352 may include proprietary or universal ports to support the interconnection of the device 100 to other devices or components, such as a dock, which may or may not include additional or different capabilities from those integral to the device 100. In addition to supporting an exchange of communication signals between the device 100 and another device or component, the docking port 136 and/or port interface 352 can support the supply of power to or from the device 100. The port interface 352 also comprises an intelligent element that comprises a docking module for controlling communications or other interactions between the Intelligent TV 100 and a connected device or component. The docking module may interface with software applications that allow for the remote control of other devices or components (e.g., media centers, media players, and computer systems).

[0132] An Intelligent TV 100 may also include memory 308 for use in connection with the execution of application programming or instructions by the processor 364, and for the temporary or long term storage of program instructions and/or data. As examples, the memory 308 may comprise RAM, DRAM, SDRAM, or other solid state memory. Alternatively or in addition, data storage 314 may be provided. Like the memory 308, the data storage 314 may comprise a solid state memory device or devices. Alternatively or in addition, the data storage 314 may comprise a hard disk drive or other random access memory.

[0133] Hardware buttons 358 can be included for example for use in connection with certain control operations. One or more image capture interfaces/devices 340, such as a camera, can be included for capturing still and/or video images. Alternatively or in addition, an image capture interface/device 340 can include a scanner, code reader, or motion sensor. An image capture interface/device 340 can include or be associated with additional elements, such as a flash or other light source. The image capture interfaces/devices 340 may interface with a user ID module 350 that assists in identifying users of the Intelligent TV 100.

[0134] The Intelligent TV 100 can also include a global positioning system (GPS) receiver 336. In accordance with embodiments of the present invention, the GPS receiver 336 may further comprise a GPS module that is capable of providing absolute location information to other components of the Intelligent TV 100. As will be appreciated, other satellite-positioning system receivers can be used in lieu of or in addition to GPS.

[0135] Power can be supplied to the components of the Intelligent TV 100 from a power source and/or power control module 360. The power control module 360 can, for example, include a battery, an AC-to-DC converter, power control logic, and/or ports for interconnecting the Intelligent TV 100 to an external source of power.

[0136] Communication between components of the Intelligent TV 100 is provided by bus 322. Bus 322 may comprise one or more physical buses for control, addressing, and/or data transmission. Bus 322 may be parallel, serial, a hybrid thereof, or other technology.

[0137] Firmware and Software:

[0138] An embodiment of the software system components and modules 400 is shown in Fig. 4. The software system 400 may comprise one or more layers including, but not limited to, an operating system kernel 404, one or more libraries 408, an application framework 412, and one

or more applications 416. The one or more layers 404-416 can communicate with each other to perform functions for the Intelligent TV 100.

[0139] An operating system (OS) kernel 404 contains the primary functions that allow the software to interact with hardware associated with the Intelligent TV 100. Kernel 404 can include a collection of software that manages the computer hardware resources and provides services for other computer programs or software code. The operating system kernel 404 is the main component of the operating system and acts as an intermediary between the applications and data processing done with the hardware components. Part of the operating system kernel 404 can include one or more device drivers 420. A device driver 420 can be any code within the operating system that helps operate or control a device or hardware attached to or associated with the Intelligent TV. The driver 420 can include code for operating video, audio, and/or other multimedia components of the Intelligent TV 100. Examples of drivers include display, camera, flash, binder (IPC), keypad, WiFi, and audio drivers.

[0140] Library 408 can contain code or other components that may be accessed and implemented during the operation of the software system 400. The library 408 may contain one or more of, but is not limited to, an operating system runtime library 424, a TV services hardware abstraction layer (HAL) library 428, and/or a data service library 432. The OS runtime library 424 may contain the code required by the operating system kernel 404 or other operating system functions to be executed during the runtime of the software system 400. The library can include the code that is initiated during the running of the software system 400.

[0141] The TV services hardware abstraction layer library 428 can include code required by TV services either executed in the application framework 412 or an application 416. The TV services HAL library 428 is specific to the Intelligent TV 100 operations that control different functions of the Intelligent TV. The TV service HAL library 428 can also be formed from other types of application languages or embodiments of different types of code or formats for code beyond the hardware abstraction layer.

[0142] The data services library 432 can include the one or more components or codes to implement components for the data services function. The data services function can be implemented in the application framework 412 and/or applications layer 416. An embodiment of a function of the data services and the type of components that may be included is shown in Fig. 6.

[0143] The application framework 412 can include a general abstraction for providing functionality that can be selected by one or more applications 416 to provide specific application functions or software for those applications. Thus, the framework 412 can include one or more different services, or other applications, that can be accessed by the applications 416 to provide general functions across two or more applications. Such functions include, for example, management of one or more of windows or panels, surfaces, activities, content, and resources, The application framework 412 can include one or more, but is not limited to, TV services 434, TV services framework 440, TV resources 444, and user interface components 448.

[0144] The TV services framework 440 can provide an additional abstraction for different TV services. TV services framework 440 allows for the general access and function of services that are associated with the TV functionality. The TV services 436 are general services provided within the TV services framework 440 that can be accessed by applications in the applications layer 416. The TV resources 444 provide code for accessing TV resources 444 including any type of storage, video, audio, or other functionality provided with the Intelligent TV 100. The TV resources 444, TV services 436, and TV services framework 440 provide for the different implementations of TV functionality that may occur with the Intelligent TV 100.

[0145] One or more user interface components 448 can provide general components for display of the Intelligent TV 100. The user interface components 448 might be general components that may be accessed by different applications provided in the application framework 412. The user interface components 448 may be accessed to provide for panels and silos as described in conjunction with Fig. 5.

[0146] The applications layer 416 can both contain and execute applications associated with the Intelligent TV 100. Applications layer 416 may include one or more of, but is not limited to, a live TV application 452, a video on demand application 456, a media center application 460, an application center application 464, and a user interface application 468. The live TV application 452 can provide live TV over different signal sources. For example, the live TV application 452 can provide TV from input from cable television, over air broadcasts, from satellite services, or other types of live TV services. Live TV application 452 may then present the multimedia presentation or video and audio presentation of the live television signal over the display of the Intelligent TV 100.

[0147] The video on demand application 456 can provide for video from different storage sources. Unlike Live TV application 452, video on demand 456 provides for display of videos that are accessed from some memory source. The sources of the video on demand can be associated with users or with the Intelligent TV or some other type of service. For example, the video on demand 456 may be provided from an iTunes library stored in a cloud, from a local disc storage that contains stored video programs, or from some other source.

[0148] The media center application 460 can provide applications for different types of media presentation. For example, the media center 460 can provide for displaying pictures or audio that is different from, but still accessible by the user, Live TV or video on demand. The media center 460 allows for the access of different sources to obtain the media in the display of such media on the Intelligent TV 100.

[0149] The application center 464 allows for the provision, storage, and use of applications. An application can be a game, a productivity application, or some other application generally associated with computer systems or other devices, but may be operated within the Intelligent TV. The application center 464 may obtain these applications from different sources, store them locally, and then execute those types of applications for the user on the Intelligent TV 100.

[0150] User interface application 468 provides for the specific user interfaces associated with the Intelligent TV 100. These user interfaces can include the silos and panels that are described in Fig. 5. An embodiment of the user interface software 500 is shown in Fig. 5. Here the application framework 412 contains one or more code components which help control the user interface events while one or more applications in the applications layer 416 affects the user interface use for the Intelligent TV 100. The application framework 412 can include a silo transition controller 504 and/or an input event dispatcher 508. There may be more or fewer code components in the application framework 412 than those shown in Fig. 5. The silo transition controller 504 contains the code and language that manages the transitions between one or more silos. A silo can be a vertical user interface feature on the Intelligent TV that contains information for user. The transition controller 504 can manage the changes between two silos when an event occurs in the user interface. The input event dispatcher 508 can receive user interface events that may be received from the operating system and provided to the input event dispatcher 508. These events can include selections of buttons on a remote control or on the TV or other types of user interface inputs. The input event dispatcher 508 may then send these

events to a silo manager 532 or panel manager 536 depending on the type of the event. The silo transition controller 504 can interface with the silo manager 532 to affect changes in the silos.

[0151] The applications layer 416 can include a user interface application 468 and/or a silo application 512. The applications layer 416 can include more or fewer user interface applications as necessary to control the user interface of the Intelligent TV 100 than those shown in Fig. 5. The user interface application 468 can include a silo manager 532, a panel manager 536, and one or more types of panels 516-528. The silo manager 532 manages the display and/or features of silos. The silo manager 532 can receive or send information from the silo transition controller 504 or the input event dispatcher 508 to change the silos displayed and/or to determine types of input received in the silos.

[0152] A panel manager 536 is operable to display panels in the user interface to manage transitions between those panels or to affect user interface inputs received in the panel. The panel manager 536 may thus be in communication with different user interface panels such as a global panel 516, a volume panel 520, a settings panel 524, and/or a notification panel 528. The panel manager 536 can display these types of panels depending on the inputs received from the input event dispatcher 508. The global panel 516 may include information that is associated with the home screen or top level hierarchal information for the user. A volume panel 520 may display information about an audio volume control or other settings for volume. A settings panel 524 can include information displayed about the settings of the audio or video, or other settable characteristics of the Intelligent TV 100. A notification panel 528 can provide information about notifications to a user. These notifications can be associated with information, such as, video on demand displays, favorites, currently provided programs, or other information. Notifications can be associated with the media or with some type of setting, or operation or the Intelligent TV 100. The panel manager 536 may be in communication with the panel controller 552 of the silo application 512.

[0153] The panel controller 552 may operate to control portions of the panels of the types described previously. Thus, the panel controller 552 may be in communication with a top panel application 540, an application panel 544, and/or bottom panel 548. These types of panels may be differently displayed in the user interface of the Intelligent TV 100. The panel control thus may be based on the configuration of the system or the type of display being used currently, put

the types of panels 516-528 into a certain display orientation governed by the top panel application 540, application panel 544, or bottom panel application 548.

[0154] An embodiment of the data service 432 and the operation of the data management is shown in Fig. 6. The data management 600 can include one or more code components that are associated with different types of data. For example, there may be code components within the data service 432 that execute and are associated with video on demand, the electronic program guide, or media data. There may be more or fewer types of data service 432 components than those shown in Fig. 6. Each of the different types of data may include a data model 604-612. The data models govern what information is to be stored and how that information will be stored by the data service. Thus, the data model can govern regardless of where the data comes from, how the data will be received or managed within the Intelligent TV system. Thus, the data model 604, 608, and/or 612, can provide a translation ability or affect the ability to translate data from one form to another to be used by the Intelligent TV 100.

[0155] The different types of data services (video on demand, electronic programming guide, media) each have a data subservice 620, 624, and/or 628 that is in communication with one or more internal and/or external content providers 616. The data subservices 620, 624, and 628 that communicate with the content providers 616 to obtain data that may then be stored in databases 632, 636, and 640. The subservices 620, 624, and 628 may communicate with and initiate or enable one or more source plug-ins 644, 648, and 652 to communicate with the content provider. For each content provider 616, there may be a different source plug-in 644, 648, and 652. Thus, if there is more than one source of content for the data, each of the data subservices 620, 624, and 628 may determine and then enable or initiate a different source plug-in 644, 648, and/or 652. The content providers 616 may also provide information to a resource arbitrator 656 and/or thumbnail cache manager 660. The resource arbitrator 656 may operate to communicate with resources 664 that are external to the data service 432. Thus, the resource arbitrator 656 may communicate with cloud based storage, network based storage, or other types of external storage in the resources 664. This information may then be provided through the content provider module 616 to the data subservices 620, 624, 628. Likewise, a thumbnail cache manager 660 may obtain thumbnail information from one of the data subservices 620, 624, 628 and store that information in the thumbnails database 668. Further, the thumbnail cache manager 660 may

extract or retrieve that information from the thumbnails database 668 to provide to one of the data subservices 620, 624, 628.

[0156] An exemplary content aggregation architecture 1300 is shown in Fig. 13. The architecture can include a user interface layer 1304 and a content aggregation layer 1308. The user interface layer 1304 may include a TV application 1312, media player 1316, and application(s) 1320. The TV application 1312 enables the viewer to view channels received via an appropriate transmission medium, such as cable, satellite, and/or the Internet. The media player 1316 views other types of media received via an appropriate transmission medium, such as the Internet. The application(s) 1320 include other TV-related (pre-installed) applications, such as content viewing, content searching, device viewing, and setup algorithms, and coordinates with the media player 1316 to provide information to the viewer.

[0157] The content source layer 1308 includes, as data services, a content source service 1328, a content aggregation service 1332, and a content presentation service 1336. The content source service 1328 can manage content source investigators, including local and/or network file system(s), digital network device manager (which discovers handheld and non-handheld devices (e.g., digital media servers, players, renderers, controllers, printers, uploaders, downloaders, network connectivity functions, and interoperability units) by known techniques, such as a multicast universal plug and play or UPnP discovery techniques, and, for each discovered device, retrieves, parses, and encodes device descriptors, notifies the content source service of the newly discovered device, and provides information, such as an index, on previously discovered devices), Internet Protocol Television (IPTV), digital television (DTV) (including high definition and enhanced TV), third party services (such as those referenced above), and applications (such as Android applications).

[0158] Content source investigators can track content sources and are typically configured as binaries. The content source service 1328 starts content source investigators and maintains open and persistent channels for communications. The communications include query or command and response pairs. The content aggregation service 1332 can manage content metadata fetchers, such as for video, audio, and/or picture metadata. The content presentation service 1336 may provide interfaces to the content index 1340, such as an Android application interface and digital device interfaces.

[0159] The content source service 1328 can send and receive communications 1344 to and from the content aggregation service 1332. The communications can include notifications regarding new and removed digital devices and/or content and search queries and results. The content aggregation service 1332 can send and receive communications 1348 to and from the content presentation service 1336 including device and/or content lookup notifications, content-of-interest advisories and notifications, and search queries and results.

[0160] When a search is performed, particularly when the user is searching or browsing content, a user request may be received from the user interface layer 1300, by the content presentation service 1336, which responsively opens a socket and sends the request to the content aggregation service 1332. The content aggregation service 1332 first returns results from the local database 1340. The local database 1340 includes an index or data model and indexed metadata. The content source service 1328 further issues search and browse requests for all content source investigators and other data management systems. The results are forwarded to the content aggregation service 1332, which updates the database 1340 to reflect the further search results and provides the original content aggregation database search results and the data updates, reflecting the additional content source service search results, over the previously opened socket to the content presentation service 1336. The content presentation service 1336 then provides the results to one or more components in the user interface layer 1300 for presentation to the viewer. When the search session is over (e.g., the search session is terminated by the user or by an action associated with user), the user interface layer 1300 disconnects the socket. As shown, media can be provided directly by the content aggregation service 1332 to the media player 1316 for presentation to the user.

[0161] Remote Control:

[0162] A handheld remote control can be provided to enable user interaction with the Intelligent TV 100. An exemplary handheld remote control is shown in Figs. 7-9. The remote control 700 can include one or more of, but is not limited to, top, side, and bottom housings 704, 708, and 712, an (on/off) power button 716, an input source button 720 (to select input source such as Live TV, video on demand, media center, application center, high definition multimedia interface (HDMI), component (COMP), audio/video (A/V), digital or analog television (DTV/ATV), and video graphics array (VGA)), a (volume) mute button 724, a Live TV button 728 (to activate or select the Live TV silo), a video on demand (VOD) button 732 (to activate or

select the video on demand silo), a media center button 736 (to activate or select the media center application or silo, which access various types of media such as music, TV programming, videos, and the like), an application center button 740 (to activate or select the application center application or silo), a global panel button 744, an application panel button 748, a back button 752 (to select a prior user operation or Intelligent TV state and/or navigate up a hierarchy of any displayed image or object(s) (in which case the back button 752 does not navigate within application panels or across application silos), a play button 756 (to play or pause media), a D-pad 760 (which includes north, east, west, and south directional arrows to navigate among displayed images and/or move between levels of an application's or object's hierarchy such as application view navigation, panel navigation, and collection navigation), an OK (or select) button 764 (to select a highlighted displayed image (such as displayed speed control, rewind, forward, play, and pause objects and/or objects on menu bar or in a menu box) and/or navigate down a hierarchy of any displayed image or object(s)), a rocker-type volume-up and volume-down button 768 (to adjust the volume), a menu/guide button 772 (to select for display a menu or guide of programming), a 0-9 (number) button 776 (to display a number pad on the TV screen), a settings button 780 (which launches an application to access current and change TV settings (such as channel settings and settings used to adjust picture and sound effects (e.g., image mode (e.g., standard, playground, game, cinema, concert, and studio), brightness, contrast, saturation, color temperature, energy savings, 3D noise reduction, hue, sharpness, zoom mode (e.g., full screen, standard, smart zoom, and dot-to-dot), picture position, 3D mode, for picture, and sound retrieval system or SRS TruSurround, sound mode (e.g., standard, live 1, live 2, theatre, music, speech, user equalizer mode, Left/Right speaker balance, auto volume control, Sony/Philips Interconnect Format or S/PDIF (off, auto, pulse code modulation or PCM) for sound) and system settings (such as system (e.g., selected language for graphical user interface, user geographical and/or geopolitical location information, input method, area settings, and sleep time), network (e.g., WiFi, WiFi hotspot, WiFi direct, Point-to-Point Protocol over Ethernet or PPPoE (asymmetric digital subscriber line or ADSL), Ethernet) settings (e.g., enabled and disabled and selected and non-selected) and information (e.g., network information (e.g., electronic address such as Internet Protocol or IP address, subnet mask, gateway, domain name server information, domain name, Media Access Control or MAC address, service set identification or SSID, security information, and password information) and inline status), manage applications (e.g.,

currently installed applications, currently executing applications, and internal and external computer readable medium usage), and view user information regarding the Intelligent TV 100)), a rocker-type channel-up and channel-down button 784 (to increment or decrement the selected channel), and first, second, third, and fourth hotkeys 788, 792, 794, and 796, and/or a moveable joystick 900 on a bottom of the remote control 700. The first, second, third, and fourth hotkeys 788, 792, 794, and 796 are generally assigned different colors, which color indexing is depicted as visual indicia on a selected panel to show the currently assigned function, if any, for each hotkey. As can be seen, the actuator layout can provide a highly efficient, satisfactory, and easily usable experience to the end user.

[0163] Unlike the functional associations and functions of many of the actuators, those of some of the actuators are not readily apparent. A number of examples will now be discussed by way of illustration.

[0164] The media center button 736, when selected, can provide information regarding music, videos, photographs, collections or groupings of music, videos, and/or photographs, and internal and external computational devices (such as personal computers, laptops, tablet computers, wireless phones, removable computer readable media, and the like), which can be grouped in a selected manner (such as favorites, most recently viewed, most watched or viewed, and most recently added). The information can includes previews (which can include selected portions of the media content, duration, file size, date created, date last watched, times watched or viewed, and audio and/or video format information).

[0165] The application center button 740, when selected, may provide information regarding pre-installed and downloaded applications. Unlike downloaded applications, pre-installed applications cannot be removed by the user or manually updated. Exemplary pre-installed applications include web browser, settings control, and content search algorithms. By way of illustration, the application center button 740 can provide a scrollable graphical grid of icons (each icon being associated with an application) currently available in the application center.

[0166] The global panel button 744, when selected, can provide the user, via one or more panels or windows, with access to one or more of, but not limited to, silos, notifications, a web browser, system settings, and information associated therewith. For example, the global panel button 744 can enable the user to determine what external devices are currently connected to and/or disconnected from the Intelligent TV 100, determine what inputs (e.g., HDMI ports) are

currently available for connecting to external devices, determine a connection and/or operational status of a selected external device and/or network (e.g., WiFi connected, Ethernet connected, and offline), assign a custom (or user selected) name to each input source, determine what content is currently being offered on Live TV, on demand, the media center, and/or the application center, access vendor messages and notifications to the user (e.g., system and/or application updates are available), activate the Internet browser, and/or access shortcuts on a displayed shortcut bar to more frequently used and desired applications. Common shortcuts are Internet browser (e.g., Internet search engine), system settings, and notifications. The common types of panels are for information (which is typically information related to a currently displayed image and/or content (e.g., title, date/time, audio/visual indicator, rating, and genre), browse requests, and/or search requests (such as search term field)). Each of the panel types may include a panel navigation bar, detailed information or relevant content to the panel function, operation and/or purpose, and a hotkey bar (defining currently enabled functional associations of hotkeys).

[0167] The application panel button 748, when selected, can display an application window or panel. One application panel may be an information panel regarding a selected (pre-installed or previously downloaded) application icon. The information panel can one or more of identify the selected application, provide a description of the functionality (including application developer and/or vendor, version, release, and/or last update date and a category or type of application based on the application's functionality) and user ratings and/or degree of other user downloading of the application (e.g., a star rating assigned based on one or more of the foregoing inputs), provide the option to launch, remove, update, and add to favorites the identified application, and provide a listing of selectable links of other (not yet downloaded) recommended applications that provide similar functionality to the identified application. The latter listing can, in turn, provide a description of the functionality (including application developer and/or vendor, version, release, and/or last update date and a category or type of application based on the application's functionality) and user ratings and/or degree of other user downloading of the application (e.g., a star rating assigned based on one or more of the foregoing inputs).

[0168] The functions of the first, second, third, and fourth hotkeys 788, 792, 794, and 796 can change depending on system state, context, and/or, within a selected screen and/or panel, based on a content or currently selected portion of (or relative cursor position on) the screen.

Commonly, a currently assigned function of any of the first, second, third, and fourth hotkeys 788, 792, 794, and 796 depends on a currently accessed silo and/or panel (with which the user is currently interacting within the silo). In other words, a first function of one of the first, second, third, and fourth hotkeys 788, 792, 794, and 796 is activated by the respective hotkey in a first system state while a different second function is activated by the respective hotkey in a different second system state. In another example, a third function of one of the first, second, third, and fourth hotkeys 788, 792, 794, and 796 is activated by the respective hotkey when a user focus (or currently selected cursor position or screen portion) is at a first screen position while a different fourth function is activated by the respective hotkey when a user focus (or currently selected cursor position or screen portion) is at a different second screen position. The first screen position can, for instance, be within an icon while the second screen position is outside of the icon. Hotkey functionality that could be enabled when in the first screen position may be "configure" and "remove" and disabled is "add", and, when in the second position hotkey functionality enabled can be "add" and disabled is "configure" and "remove". Generally, the states of hotkeys can include normal (for enabled actions or functions), disabled (when an action or function is temporarily disabled), pressed (when selected by a user to command an action or function to be performed), and unavailable (when no association between the hotkey and an action or function is currently available). While examples of hotkey functions are discussed below, it is to be understood that these are not intended to be exhaustive or limiting examples.

[0169] The first hotkey 788, when selected in a first system state, can enable the user to assign, change, or edit a name of an input source. It is typically enabled only when the input source of HDMI, Comp/YPbPr (e.g., component video cables), video output, and VGA is in focus. When selected in a second system state, the first hotkey 788 can return the user to a top of a scrollable collection of objects, such as application icons.

[0170] The second hotkey 792 may show all or less. In other words, the hotkey 792 can allow the user to show all inputs, including the unconnected/undetected ones and to hide the unconnected/undetected inputs, e.g., to expand and collapse the silo/input list. Each input source can have one of two states, namely connected/detected and unconnected/undetected. Some input sources, including Live TV, video on demand, media center, and application center, are always connected/detected.

[0171] The moveable joystick 900 on the bottom of the remote control 700, when manipulated, can cause a displayed image on the Intelligent TV 100 screen to be displaced a proportional amount. In other words, the displayed image is displaced substantially simultaneously with displacement of the joystick 900 within the joystick aperture 904 in the bottom housing 712 of the remote control. As shown in Figs. 9B-C, the joystick 900 moves or slides between forward and reverse positions. Releasing the joystick 900 causes the joystick 900 to return to the center position of Fig. 9A, and the window to move or slide upwardly (when the joystick is released from the joystick position of Fig. 9B) or downwardly (when the joystick is released from the joystick position of Fig. 9C) until it disappears from view as shown in Fig. 11A. The effect on the screen of the Intelligent TV 100 is shown in Figs. 11A-C. In Fig. 11A, video content, such as TV programming, a video, movie, and the like, is being displayed by front surface of the screen 212. In Fig, 11B, the joystick 900 is moved or slid to the upper position of Fig. 9B, and a drop down window or panel 1100 moves or slides down (at the substantially the same rate of joystick 900 movement) at the top of the screen 212. In Fig, 11C, the joystick 900 is moved or slid to the lower position of Fig. 9C, and a drop up window or panel 1100 moves or slides up (at the substantially the same rate of joystick 900 movement) at the bottom of the screen 212. The window 1100 partially covers the video content appearing on the remainder of the screen 212 and/or causes a portion of the screen 212 displaying video content to move and/or compress up or down the height of the window 1100.

[0172] The window 1100 can include one or more of information (which is typically information related to a currently displayed image and/or content (e.g., panel navigation bar, detailed information (e.g., title, date/time, audio/visual indicator, rating, and genre), and hotkey bar (defining current functional associations of hotkeys)), browse requests, and/or search requests. Commonly, the window 1100 includes suitable information about the content (such as name, duration, and/or remaining viewing duration of content), settings information, TV or system control information, application (activation) icons (such as for pre-installed and/or downloaded applications such as application center, media center and Web browser), and/or information about input source(s), When the joystick 900 is in either the forward or reverse position, the user can select an actuator on the front of the remote control, such as the OK button 764, and be taken, by displayed images on the screen 212, to another location in the user interface, such as a desktop. This process can be done in an nonintrusive manner and without

affecting the flow of content that is pushed up or down. The joystick 900 could be moved, additionally or differently, from side-to-side to cause the window to appear at the left or right edge of the screen 212.

[0173] An alternative actuator configuration is shown in Fig. 10. The actuators are substantially the same as those of Figs. 7-9 except that the social network button 1000, when selected, can automatically select content and publish, via a social network service or other social media, the content to a social network or online community. User or viewer comments and/or other messages can be included in the outbound message. For example, all or one or frames or portions of media content (such as a video, music, a photograph, a picture, or text) can be provided automatically to a predetermined or selected group of people via Linked-In™, Myspace™, Twitter™, YouTube™, DailyMotion™, Facebook™, Google+™, or Second Life™. The user, upon activating the button 1000 could, in response, select a social forum or media upon which the selected content (which is the content displayed to the user when the social network button 1000 is activated) is to be posted and/or a predetermined group within that social media to which the content is to be posted. Alternatively, these selections could be preconfigured or preselected by the user.

[0174] The social network button can also be used to "turn up" or "turn down" a social volume visualization. The Intelligent TV 100 can create dynamically a visualization of aggregated connections (and inbound and/or outbound messages) from a variety of social networks. The aggregation (and inbound and outbound messages) can be depicted graphically on the screen as a volume of connections to influence the viewer user. With a social volume visualization, selected contents of each linked social network profile of a social contact (and inbound and/or outbound messages from or to the linked social network contact and/or current activity of the social contact (such as watching the same programming or content the viewer is currently watching) can be presented in a separate tile (or visually displayed object). The size of the tile can be related to any number of criteria, including a relationship of the linked social contact (e.g., a relative degree of importance or type of relationship can determine the relative size of the tile, a degree of influence of the linked social contact to the current viewer, a geographic proximity of the linked social contact to the current viewer, a degree to which the currently provided media content is of interest to both the viewer and linked social contact (e.g., both parties enjoy war movies, murder mysteries, musicals, comedies, and the like), an assigned ranking of the linked

viewer by the viewer, a type of social network type linking the viewer with the linked social contact, a current activity of the social network contact (e.g., currently watching the same content that the viewer is currently watching), a current online or offline status of the linked social contact, and a social network grouping type or category to which both the viewer and linked social contact belong (e.g., work contact, best friend, family member, etc.).

[0175] The viewer can designate a portion of the screen to depict the social network aggregation. By turning the social volume up (+) or down (-), the viewer can increase the size and/or numbers of linked contact tiles provided to the viewer. In other words, by increasing the social volume the viewer can view, access, and/or push more social content from those of his or her social networks associated with him or her in a memory of the Intelligent TV. By decreasing the social volume, the viewer can view, access, and/or push less social content from his or her associated social networks. By selecting the mute button 724, the viewer can stop or pause any interactivity with his or her associated social networks (e.g., inbound or outbound messages). Social volume and/or mute can be separated into two (or more) volume settings for outbound and inbound social network activity. By way of illustration, a first volume setting, control, and/or button can control the volume for outbound social network activity (e.g., outbound social messages) while a second (different) volume setting, control, and/or button can control the volume for inbound social network activity (e.g., inbound social messages). By way of further illustration, a first mute setting, control, and/or button can stop or pause outbound social network activity (e.g., outbound social messages) while a second (different) mute setting, control, and/or button can stop or pause inbound social network activity (e.g., inbound social messages).

[0176] A functional block diagram of the remote control is shown in Fig. 12. The remote control 700 includes a controller 1208 to control and supervise remote control operations, optional wireless (RF) transceiver 1224 and antenna 1244 to send and receive wireless signals to and from the Intelligent TV 100 and other external components, optional infrared emitter 1228 to emit infrared signals to the Intelligent TV 100, optional light emitting diode or LED driver 1232 to control LED operation to provide video-enabled feedback to the user, actuators 1220 (including the various buttons and other actuators discussed above in connection with Figs. 7 and 10), and joystick 900, all interconnected via a bus 1248. An on board power source 1200 and power management module 1204 provide power to each of these components via power circuitry 1240. The infrared emitter 1228 and receiver (not shown) on the Intelligent TV system 100 can

be used to determine a displayed object illuminated by the infrared signal and therefore adjust the displayed image, for example to indicate a focus of the user (e.g., illuminate a displayed object or show cursor position relative to displayed objects on the screen) and to determine and activate a desired command of the user. This can be done by tracking a position of the remote control in relation to infrared tracking reference points (e.g., a sensor bar or infrared LED's) positioned on or adjacent to the screen of the Intelligent TV 100. Motion tracking can further be augmented using position information received from a multi-axis gyroscope and/or accelerometer on board the remote control (not shown).

[0177] Referring now to Fig. 14, a panel configuration in accordance with embodiments of the present disclosure is illustrated. As previously discussed, the panel manager 536 is operable to display panels in the user interface, to manage transitions between those panels, or to affect user interface inputs received in the panel. The panel manager 536 may thus be in communication with different user interface panels such as a global panel 516, a volume panel 520, a settings panel 524, an application panel 544, and/or a notification panel 528. The panel manager 536 can display these types of panels depending on the inputs received from the input event dispatcher 508. The panel system is designed to provide a quick access to extended functionality while still maintaining visibility into the main content view.

[0178] As illustrated in Fig. 14, an Intelligent TV 100 may display a global panel 1404, an active content view 1408, and an application panel 1412. The global panel 1404 may be the same or similar to global panel 516. The global panel 1404 may include information that is associated with the home screen or top level hierarchal information for the user. For instance, global panel 1404 may be used to contain and access functionality that exists at a system level; this functionality may be completely independent of the currently viewed content. The global panel 1404 may be displayed in such a manner as to not disrupt the content view area 1404; that is, the global panel 1404 may be displayed in such a manner as to provide a user the ability to view content displayed in the content view area 1408. For example, the global panel 1404 may be translucent in nature such that the content displayed in the content view area 1408 is displayed (i.e., still viewable to a user), behind the global panel 1404. The global panel 1404 may provide a consistent access to high level actions across all applications, an anchor for all views, a unified experience, and further may follow the same pattern as the application panel 1412. Moreover, and as previously discussed, global panel 1404 may be displayed by the Intelligent TV 100 such

that the active content in the content view area 1408 is always in view. In some embodiments, the global panel 1404 and the contents of the global panel 1404 may depend on the user; that is, the global panel 1404 may be specific to one or more users. Therefore, the global panel 1404 may also be thought of as a home panel.

[0179] As further illustrated in Fig. 14, an Intelligent TV 100 may display an application panel 1412. The application panel 1412 may be the same or similar to application panel 544. The application panel 1412 may provide access to contextually relevant functionality based on the currently viewing/recently viewed material. Similar to the global panel 1404, the application panel 1412 may provide such access without disrupting the content view area 1408. That is, the application panel 1412 may be displayed in such a manner as to provide a user the ability to view content displayed in convent view area 1408. For example, the application panel 1412 may be translucent in nature such that the content displayed in the content view area 1408 is displayed (i.e., still viewable to a user), behind the application panel 1412. The application panel 1412 may provide quick access to core functionality of the Intelligent TV 100 such that the active content in the content view area 1408 is always in view. Moreover, the application panel 1412 may provide a consistent user experience across all applications and may include focused contextual content.

[0180] Referring now to Fig. 15, a global panel configuration in accordance with embodiments of the present disclosure is depicted. Specifically, Intelligent TV 100 may display a global panel 1404 such that the global panel 1404 appears on the left side of the Intelligent TV 100. However, Intelligent TV 100 is not limited to displaying the global panel 1404 on the left; in some embodiments, and consistent with the present disclosure, the global panel 1404 may be displayed on the right side of the Intelligent TV 100, near the top side of the Intelligent TV 100, near the bottom of the Intelligent TV 100, and also in the center of the Intelligent TV 100. Moreover, the Intelligent TV 100 may display content in an active content area 1408.

[0181] A detailed global panel 1404 configuration is illustrated in accordance with embodiments of the present disclosure. The global panel 1404 may include one or more sources represented by icons and text, or shortcuts, 1504A-E. Of course, more or less icons and text 1504A-E may be displayed. As previously discussed, each icon and text 1504A-E may be associated with one or more sources of content. For example, icon and text 1504A may be associated with the Live TV application 452; icon and text 1504B may be associated with the

video on demand application 456; icon and text 1504C may be associated with the media center application 460; icon and text 1504D may be associated with the application center application 464; and icon and text 1504E may be associated with one or more sources of content, either internal or external. Moreover, icon and text 1504F may provide the ability for all sources of content to be displayed within global panel 1404. Global panel 1404 may additionally indicate a source that is selected using an indicator 1512; for example, the indicator 1512 may comprise a box positioned around On Demand – Skyfalls. Although illustrated as a box, other methods or configurations which provide for icon selection and/or identification may be used. For example, instead of a box, indicator 1512 may comprise a circle, oval, or line or may comprise adjusting the background of an icon and text 1504A-F such that the color, shade, highlighting, spotlight, or hue is different for the selected icon and text 1504A-F. Alternatively or in addition, indicator 1512 may comprise enlarging or magnifying the icon and text 1504A-F.

[0182] The text portion of icon and text 1504A-1504F may also include the application, source, or channel that is currently maintained, on hold, active, and/or associated with another content that is not currently displayed in the content display area 1408. For example, in Fig. 15, the active content area 1408 is currently displaying an On Demand view (specifically, Skyfalls) that is on the on demand application 456. The text of icon and text 1504B includes a title of the content that was previously displayed - "Skyfalls." The other icons and text, 1504A, 1504C-E, may display the previously active content or content that was previously displayed in the active area 1408 at one time, but is now currently in a hold, an inactive, or a paused state. For example, icon and text 1504A display "Live TV – 801 CNXN," which Live TV application 452 may have previously been displaying some form of content: various Live TV channels, etc. The text of icon and 1504A includes a title of the content that was previously displayed: "801 CNXN." Similarly, the text portion of icon and text 1504D displays a previously displayed or previously active application—for example, "Bubble Bird." The application "Bubble Bird" may still reside in some form of application memory associated with the application center application 464. As another example, the text portion of icon and text 1504E includes "HDMI 1 – YBOX 720." Thus, the source content on the HDMI 1 port from a YBOX 720 was previously displayed in content area 1408.

[0183] Additionally, the global panel 1404 may include a shortcut area 1516. The shortcut area 1516 may provide access to frequently used applications, sources, or areas of the Intelligent

TV 100. Moreover, shortcut area 1516 may be user configurable; thus, a user may be able to decide what applications or sources are displayed in the short cut area 1516. As illustrated in Fig. 15, shortcut area 1516 displays an icon for a browser 1520A, an icon for a settings menu 1520B, and an icon for alerts 1520C. The settings 1520B may provide a user access to one or more Intelligent TV 100 configurations. Additionally, the alerts icon 1520C, may indicate a number of alerts, or messages, a user has. The alert messages may be messages involving the operation and configuration of the Intelligent TV 100, messages received from one or more users, indications that new content has arrived, or the like.

[0184] In addition, the global panel 1404 may be displayed such that the actively displayed content is displayed in active content area 1408 and is further visible behind global panel 1404. For example, the content currently displayed on the Intelligent TV 100 is an image or video associated with Skyfalls. The global panel 1404 may be translucent such that the content is displayed below or behind the global panel 1404, as represented by the dotted lines in Fig. 15.

[0185] As previously discussed, the Intelligent TV 100 may further include an application panel 1412 as shown in Fig. 16A. The content displayed in the application panel 1412 depends on the content displayed in content view area 1408. Stated another way, application panel 1412 is contextually dependent upon the source of content and the content itself in content view area 1408. This is significantly different from global panel 1404, in which the content displayed in global panel 1404 contains functionality that exists at a system level and is completely independent of the currently viewed content in content view area 1408. The application panel 1412 also provides customized information for each application. The application panel 1412 is horizontally scrollable and vertically scrollable. Thus, the navigation panel bar 1604 is horizontally scrollable and the content area may be vertically scrollable. The navigation bar 1604 appears in multiple places throughout the system. Although the visual appearance may vary, the functionality of the navigation bar 1604 remains the same across all screens. A very simple horizontal pattern is used to move between elements in the navigation bar 1604. Unlike other controls, the navigation bar 1604 does not support a separation between focus and selection. Moving between tabs in a navigation bar 1604 happens as soon as the focus is moved to the next item. In many cases moving past the edges of the content below a navigation bar 1604 will also move to the next tab. When the number of items exceeds the available space, the navigation bar 1604 may scroll horizontally. A navigation bar 1604 with one item becomes a title bar and no

longer support focus or selection. The Master View's navigation bar follows the same navigation pattern but will not convert to a dropdown when there is insufficient horizontal space. The Master View's navigation bar supports horizontal scrolling.

[0186] The application panel 1412 may comprise application panel elements comprising an application panel navigation bar 1604, a content area 1608, and a hotkey legend 1612. The application panel navigation bar 1604 is presented such that the navigation pattern and content remain consistent across applications. That is, the navigation bar 1604 may include the same or similar elements such that ease of navigation is maintained no matter which applications and/or sources are selected and displayed. For example, the panel navigation bar 1604 may include fixed tab regions (also called tabs or panel views herein) 1620A-1620F corresponding to navigable menus and further comprising Info, New, Recommended, Genre, Favorites, and Search. Although, Info 1620A, New 1620B, Recommended 1620C, Genre 1620D, Favorites 1620E, and Search 1620F are illustrated in Fig. 16A, additional or fewer tabs may be displayed.

[0187] The panel content area 1608 is panel view specific; that is, depending on a panel view focus, the panel content area 1608 may update or change, as further described below. The panel content area 1608 is panel view specific, i.e., when the panel view in focus changes, the panel content area 1608 updates to the corresponding panel view that is currently in focus. The panel content area for each panel view is also active content area 1408 specific; that is, depending on the active content area currently selected or being viewed, the panel content area 1608 may change and/or may be presented in a different way (i.e., have a slightly different look or content). The Active View (content view area 1408) should not be interrupted while the user is navigating the application panel 1412.

[0188] Moreover, application panel 1412 may include a hotkey legend 1612 corresponding to one or more hotkeys. The hot key legend 1612 may be positioned at the bottom of the application panel 1412 across all applications. The function of the hot keys is context sensitive and may vary depending on the application selected and/or displayed in content view area 1408. However, generally speaking, some hot keys are generally navigation based while others are action based—for example, based on shortcuts such as marking a series as a favorite. The hot key legend 1612 is positioned at the bottom of the panel 1412 across all applications. The function of hot keys 1612 is context sensitive, and it might vary in different applications. However, generally speaking, the red and yellow keys are navigation based shortcuts, and the

green and blue keys are action based shortcuts, such as marking a series as favorite. These colors and actions may vary in different embodiments and across different applications.

[0189] Fig. 16B shows one embodiment of the user interface and behavior for the application panel 1412 in the video on demand application 456, including three of the application panel's 1412 six panel views: Info, New, Recommended, Genre, Favorites, and Search. Fig. 16B also shows the Master View with top categories 1652 and tiles 1650. The video on demand interaction framework is flexible so different content providers can populate the content into the views in video on demand by providing a back end data source. Most views in video on demand have multiple components; some components are mandatory and others are optional. Content providers can pick and choose the components that go into each view based on the structure and availability of their media content. Within each top category in the Master View, content is organized in collections represented by tiles. An "All" collection that contains all the media content within this top category is available if needed. As an example, the top category "Movies" 1652B can have the following tiles: All 1650A, My Favorites 1650F, Top Watched 1650E, New 1650C, Recommended 1650C, etc.

[0190] The application panel 1412 provides customized information in each application view. The navigation pattern and content layout remains consistent across all applications. There may be a number (e.g., three or six) tabs in the application panel navigation bar 1604. Each tab represents a panel view 1620. The total number of views in the application panel 1412 varies in each application. The application panel navigation bar 1604 follows the same interaction pattern across all functions. If overflow happens, the navigation bar becomes horizontally scrollable and visual feedback may be provided to indicate so.

[0191] In accordance with some embodiments of the present invention and as previously described, a user may select a tab 1620A corresponding to info, as illustrated in Fig.16BA. An indicator, such as indicator 1640, may display which panel view 1620A-C is selected or has the current focus. Application panel 1412 may then display context specific information corresponding to the active content area 1408. For example, application panel 1412 may include information specific to On Demand—for example a show name and the number of seasons, episodes, etc. Additionally, a large thumbnail image 1658 corresponding to a specific show may be displayed in the application panel 1412, for example in the large information view contents for a TV series 1652C top category. Moreover, the application panel 1412 may utilize one or

more panel content types discussed in Figs. 17A-17B. Mini information view contents 1662 may contain additional or alternative information. Moreover, additional information pertaining to the active content area 1408 may be presented to a user. Information such as the title of the show, the number of seasons for the show, the number of episodes for the show, a description of the program, characteristics of the program (for example HD, Dolby, and category), and the number of stars 1660 a show receives may also be displayed. Options such as "View" 1654 (to view series details) or "Add to Favorites" 1656 (to add the series or episode to a favorites list) may also be available to the user. In one embodiment, the "View" button 1654 allows the user to view the content or view a preview of the content. In some embodiments, upon the display of the application panel 1412, the shortcut area 1516 may also be displayed. Similar views and layouts may be used in the info panel 1412A if Variety Episode or Movie is selected rather than TV Series.

[0192] The goal of this design is to provide clear navigation mechanism within the application panel 1412. The two fundamental rules of navigating on the application panel 1412 are: (1) Left-Right and (2) Up-Bottom. Using the left and right arrows on the D-Pad navigates between the various panel views 1620. Pressing left or right arrows does not move the focus within the content view area 1408 and the content area 1608 also remains in focus in the application panel 1412. When reaching the end of the navigation bar 1604, visual feedback may be provided to indicate the user can no longer scroll to the left or right. Using up and down arrows on the D-Pad navigates through selectable items in the panel content area 1608. The user may also use the down arrows on the D-Pad to get to the hot key legend 1612 and may use the left and right arrows to scroll through the hot keys 1612A-D.

[0193] Pressing the remote [Panel Button] launches the application panel 1412, and pressing it again dismisses the panel 1412. In some scenarios, the application panel 1412 is dismissed automatically upon user choosing to play the video by selecting either a "Watch" button or pressing the "Play" button on the remote or by selecting "View" 1654 on the application panel 1412. Alternatively, "View" 1654 may allow the user to see details and more information about the selected show, movie, series, etc.

[0194] The stickiness rule applies to the application panel 1412 across different panel views 1620. When the application panel 1412 is launched, it shows the view where the user was last before the panel 1412 was dismissed. If the content in the view is time based, the content should

be updated. When the application panel 1412is launched for the first time, the default view (the first tab on the navigation bar) is shown.

[0195] Multiple panels are provided based on the context of navigation. The system supports five main categories of panels. Within each of these categories are multiple variations. The types of panels are based on the needs of the application. The panels are related to the current active view. Multiple variations within the five categories of panels allow the user a rich, elegant, and intelligent navigational experience.

[0196] Fig. 16C shows the application panel 1412 layout on the screen. The panel height occupies the whole screen, while its width is fixed. All list items share the same set of basic rules. The list items are categorized by the number of lines they can show (e.g., from 1 to 4 lines). All list items follow the same structure, containing a picture area and a content area. In general, the smaller ones will show icons while the bigger one will show thumbnails. Depending on the situation, the picture area may not be used, or be aligned to the right. The list items have fixed height, while their width is fluid. When a list item is scaled horizontally, the picture area size remains fixed, while content area grows/shrinks to accommodate the new width. The content area can contain multiples configurations of information. For example, the 4-Liner can be used to show 1 single line text plus 1 multiline text (exactly like the example on the left), but it could also be used to show 4 singles lines of text, or just one multiline text. All list items share the same margin between the thumbnail and the labels, as shown on the diagram.

[0197] The aspect ratio of the picture area is by default a square. But, in some situations, the picture area or thumbnail can have different aspect ratios: special landscape or special portrait, in order to match with the type of content that is being displayed. All lists in the application panel that holds 1-liner list items share the same specifications shown on the left. All lists in the application panel that holds 1-liner-plus list items share the same specifications shown on the left. All lists in the application panel that holds 2-liner list items share the same specifications shown on the left. All lists in the application panel that holds 3-liner list items share the same specifications shown on the left. All lists in the application panel that holds 4-liner list items share the same specifications shown on the left.

[0198] As illustrated in Figs. 17A-17B, multiple content area panels are provided in accordance with embodiments of the present disclosure. Each panel may be provided based on the context of a navigation. For example, if the panel and navigation bar 1604 indicates that the

focus is upon the "Info" panel tab (also called the info panel herein) 1620A, a panel based on the Info Views 1704 category, such as "Series Info" 1704A, may display content related to the current active view. As another example, when the focus of the panel and navigation bar 1604 is upon the "Favorites" panel tab 1620E, a panel based on the Favorites 1716 category, such as "Videos" 1716B, may display content related to the current active view. The categories of panels may include, but are not limited to, "Info Views" 1704 having panel types corresponding to 1704A-1704J; "Browse" 1708 having panel types corresponding to 1708A-1708K; "Search" 1712 having panel types 1712A-1712B; "Favorites" 1716 having panel types 1716A-1716D; and "Global" 1720 having a panel type of 1720A. More or less panel categories and panel types may be provided.

[0199] Fig. 18 depicts an example where the "New" panel tab (also called the new panel herein), such as 1620B, has a focus in the navigation bar 1604 in accordance with some embodiments of the present disclosure. When the new panel has a focus or is selected, a browse category 1708 having a panel type 1708E may be utilized to display information regarding new content items. For example, Fig. 18 illustrates an example application panel 1412 when "New" is selected, i.e., the new panel 1412B. In such an instance, the new panel 1708E provides a list of recommendations based on the new media where the new media is media agnostic. The new panel 1708E may provide a rich list of new content, including episode number, series name, description, movie name, runtime information, etc. For example, one or more content areas 1804 may be displayed containing information relating to new content. The content areas 1804 may be arranged chronologically by release date, alphabetically, per the favorites settings, or by some other means. The content areas 1804 may include a thumbnail 1812 displaying one or more images associated with the new content. Additionally, where the content displayed includes episode information, the content area 1804 may include one or more of an episode number, an episode name, a series name, description, movie name, runtime information, etc. Additionally, the content area 1804 may include a hotkey legend corresponding to one or more hotkeys 1612A to add some aspect (for example, an entire series, an episode, etc.) to a favorites list. The info panel 1412A is horizontally scrollable and vertically scrollable. Thus, the navigation panel bar 1604 is horizontally scrollable and the panel content area 1608 may be vertically scrollable.

[0200] Fig. 19A depicts an example where the "Favorites" tab (also called the favorites panel herein), such as 1620E, has a focus in the navigation bar 1604 in accordance with some

embodiments of the present disclosure. When favorites panel has a focus or is selected, a favorites category 1716 having a panel type corresponding to one of 1716A-1716D may be utilized to display information regarding content items marked as favorite. Specifically, when the Intelligent TV 100 is in the video on demand application 456, the panel type will correspond to one of 1716C and 1716D depending on whether the user has selected movies on demand or TV series on demand within the video on demand application 456. The favorites panel 1412A displayed in the application panel 1412, may provide a running list of a user's favorite content and may allow for easy viewing, date checking, sharing, and the like, of content items marked as favorite. In one embodiment, the list of favorites is provided alphabetically. The maximum number of items in the list is 20 items. If there are more than 20 favorites a "Show all Favorites" button appears at the bottom of the scrolling list. Selecting that button dismisses the panel and takes the user to the Favorites Collection View.

[0201] For example Fig. 19A illustrates an example of an application panel 1412 when "Favorites" is selected. In such an instance, one of the favorites panel 1412A corresponding to 1716C-1716D provides a list recommendations based on content that a user has marked as special or favorite. The favorites panel 1412A provides a favorites list 1908 comprising a vertical scrollable collection of items 1904 that a user has marked as a favorite. In some embodiments, it offers a series name and a short description. The favorites panel may include desirable features such as content filtering, search/electronic programming guide/navigation bars, silo mobility, taskflows, social TV, On-Demand TV, Live TV, hosted content, and content aggregation. In other embodiments, the lists may be displayed differently. Additionally or alternatively, certain content may be excluded or limitations enforced. In some embodiments, the content items 1904, for example, may be media agnostic. That is, the favorite content as illustrated in Figs. 19A and 19B may include TV shows, movies, variety shows, applications, etc. The same rules apply for the variety shows and the movies as apply when a TV series or episode is in focus in the active content area 1408. The content area 1608 associated with favorite content generally includes an image thumbnail 1912 of the favorite item, and additional information, such as a series name, movie name, and/or a short description of the favorite content. Additionally, the content area 1608 may include a hotkey legend 1612 corresponding to one or more hotkeys 1612A to unmark content as a favorite (e.g., the blue hot key). In some

embodiments, the red hot key may be a navigation button to go to the top of the panel (the first item selected in the list).

[0202] Fig. 19B shows the favorites panel 1412E when the user selects TV Series 1652C within the on demand application 456. An indicator, such as indicator 1640, may display which tab 1620D-F is selected or has the current focus. The indicator 1640 may be a box, line, spotlight, highlight, etc. in various embodiments. The user may select content within the content active area 1408 by selecting different top categories such as "Showcase" 1652A, "Movies" 1652B, "TV Series" 1652C, or "Variety" 1652D. Additionally, an indicator, such as indicator 1640B, may display which top category 1652 is selected or has the current focus. The indicator 1640B may be a box, line, spotlight, highlight, etc. in various embodiments. Within each top category 1652A-D the user may make additional selections to choose the desired content. For example, when the user has selected "TV Series" 1652C, the user may make additional selections such as "All" 1650A TV series, a specific TV series "Game of Kings" 1650B, "New" 1650C TV series, "My Favorites" 1650F TV series, "Top Watched" 1650E TV series, or "Recommended" 1650D TV series. Thus, if TV Series 1652C is selected and All content 1650A is selected, the favorites panel 1412E may show a list 1908 of favorite TV series. Each favorite item 1904 may comprise a thumbnail 1912, the TV series name, and a description. The info panel 1412E is horizontally scrollable and vertically scrollable. Thus, the navigation panel bar 1604 is horizontally scrollable and the panel content area 1608 may be vertically scrollable. As the favorites panel 1412E is used to navigate through various recommendations information about the displayed content, the favorites panel 1412E itself does not obstruct the user from viewing content displayed on the screen of the intelligent television.

[0203] Additionally, a shortcut area 1516 may provide access to frequently used applications, sources, or areas of the Intelligent TV 100. As illustrated in Fig. 19B, shortcut area 1516 displays an icon for a browser 1520A, an icon for a settings menu 1520B, and an icon for alerts 1520C.

[0204] The information panel provides the user with information related to the current active view. For example, if the user is watching Episode 5 of a TV series from Video On Demand, then the information panel provides the information about Episode 5. Alternatively, if the user is watching Live TV, then Information Panel provides the information on currently playing program, the channel, etc. The on demand info panel 1412A provides contextual content and

helps the viewer quickly access related functionality. All views are accessible via D-Pad within the panel.

[0205] Fig. 20A shows one embodiment of the user interface and behavior for the application panel 1412 in the video on demand application 456 when the info panel 1620A is selected, including three of the application panel's 1412 six views: Info 1620A, New 1620B, Recommended 1620C, Genre, Favorites, and Search. The info panel 1412A for episode view appears when the user has an episode in view or is watching any TV episode. The video playback should not be interrupted while the user navigates the info panel 1412A. Additionally, as the info panel 1412A is used to navigate through various recommendations information about the displayed content, the info panel 1412A itself does not obstruct the user from viewing content displayed on the screen of the intelligent television.

[0206] In accordance with some embodiments of the present invention and as previously described, a user may select a panel view 1620A corresponding to info, as illustrated in Fig. 20A. An indicator, such as indicator 1640, may display which tab 1620A-C is selected or has the current focus. Application panel 1412 may then display context specific information corresponding to the active content area 1408. The application panel 1412 may include information specific to the video on demand application 456—for example a show name and the number of seasons, episodes, etc. Additionally, a thumbnail image 2008 corresponding to a specific show may be displayed in the info panel 1412A. The thumbnail 2008 may be a large thumbnail that is a large poster view for the series. If a thumbnail is not available, then a generic series thumbnail 2008 will be used. The thumbnail 2008 is not selectable in some embodiments. Moreover, the info panel 1412A may utilize one or more panel content types discussed in Figs. 17A-17B. For example, an additional information region 1662 may display a mini-list of recommended shows displaying the show name and show description and pertaining to the active content area 1408. For example, a mini-list of recommended shows 1662 displaying the show name and show description and pertaining to the active content area 1408 may be displayed in the application panel 1412. Alternatively, a mini-list of the next episodes displaying the show name and show description may be provided in additional information section 1662. Moreover, additional information pertaining to the active content area 1408 may be presented to a user in the additional information region 1662. Information such as the title of the show, the number of seasons for the show that have at least one available episode on the system, the number of

episodes for the show/series available on the system, a description of the program (i.e., the description of the series' metadata), characteristics of the program (for example HD, Dolby, and category), and the number of stars 1660 a show receives may also be displayed. Options such as "View" 2012 (to view details about a series or to launch the series digest view) or "Add to Favorites" 2016 (to add an item to a favorites list) may also be available to the user. The View button 2012 is the default focus on the info panel 1412A. The thumbnail 2008, View button 2012, and the Add to Favorites button 2016 may be called the preview content area because it allows the user to preview the content before viewing the content. When the user is in the video on demand application 456, and the user has selected TV Series 1652C, the information panel 1412A allows the user to mark a series as a favorite via an episode screen in the application panel 1412 rather than having to go back to view the entire series. Additionally or alternatively, when the user is in the video on demand application 456 and the user has selected TV Series 1652C, the info panel 1412A allows the user get information on that series before the user watches the series. Thus, if the user has not yet selected a series to view in the active content area 1408, but rather is getting information about the series before viewing the series, the user may select View 2012 in the info panel 1412A to view the series in the active content area 1408.

[0207] An indicator, such as indicator 1640, may display which tab 1620A-C is selected or has the current focus. The indicator 1640 may be a box, line, spotlight, highlight, etc. in various embodiments. The user may select content within the content active area 1408 Master View by selecting different top categories such as "Showcase" 1652A, "Movies" 1652B, "TV Series" 1652C, or "Variety" 1652D. Additionally, an indicator, such as indicator 1640B, may display which top category is selected or has the current focus. The indicator 1640B may be a box, line, spotlight, highlight, etc. in various embodiments. Within each top category 1652A-D, the user may make additional selections to choose the desired content. For example, when the user has selected the top category "TV Series" 1652C, the user may make additional content selections by selecting tiles 1650 such as an "All" 1650A tile, a specific TV series "Game of Kings" tile 1650B, a "New" tile 1650C, a "My Favorites" tile 1650F, a "Top Watched" tile 1650E, or a "Recommended" tile 1650D. Thus, if top category TV Series 1652C is selected and the Game of Kings tile 1650B is selected, the info panel 1412A content area 1408 may show information about that specific TV series. The information may comprise a thumbnail 2008, the show name, number of seasons, number of episodes, information about the series (HD, Dolby, category,

closed captioned, etc.), a description, and the rating 1660. The info panel 1412A content area 1608 may also include a hotkey legend 1612 corresponding to one or more hotkeys 1612A to add the entire series or an episode to a favorites list or remove the series or episode from a favorites list. If the user has an episode in view in the active content area 1408, the favorite hot key 1612A will mark the series (not the episode) as a favorite or remove the series from favorites. The watched hot key 1612B toggles the watched status of the episode. If the watch button is in focus (not shown), pressing the select key on the remote dismisses the panel and plays the episode from the beginning. If the video is already playing, pressing select dismisses the panel. If the video is paused, pressing the select key dismisses the panel and resumes the video.

[0208] Additionally, a shortcut area 1516 may provide access to frequently used applications, sources, or areas of the Intelligent TV 100.

[0209] Fig. 20B depicts an example when the info panel tab 1620A has a focus, i.e., the info panel 1412A is selected and shown, in accordance with some embodiments of the present disclosure. When the info panel view 1620A has a focus, an info panel type, such as series info 1704A, may be presented in a detailed information region 2030. The series info 1704A may be presented when the content displayed in the content active area 1408 is associated with content having series information, such as video on demand 456 TV series 1652C. The info panel 1412A may include series information 2004A and 2004B, a view button 2012, a favorite button 2016, and a thumbnail display of the series information 2008. The series information 2004A and 2004B may comprise information related to or associated with content having series information, such as a TV series, or the like. The series information 2004A and 2004B may include the series name, a season, an episode number, and episode name, a long description of the series, video format (the resolution of the series episodes), audio format, rating, and series number. Of course additional information relating to a series may be displayed.

[0210] The detailed information region 2030 for a TV Series Episode may container similar information to the detailed information region 2030 for other content types. Specifically, the large information label 2004 may contain episode name, episode number, episode description, runtime, air date, video format, audio format, and a rating.

[0211] The detailed information region 2030 for a Movie may container similar information to the detailed information region 2030 for other content types. Specifically, the large information

label 2004 may contain movie name, runtime, description, video codec, audio codec, video format, audio format, and/or rating.

[0212] Moreover, an info panel 1412A content area 2020 may provide "Next Episode" information. Next episode information may comprise a list content area 2024 corresponding to the next episodes, if any, of a selected episode. The list content area 2024 may include a thumbnail of the next episode and/or additional episode information, such as episode number, episode name, air date, video format, audio format, rating, file location, description, and runtime information. In some embodiments, the hot keys 1612A-D may be different colors and may correspond to action buttons or navigation buttons. In one embodiment, the Favorites hot key 1612A may be blue.

[0213] Fig. 20C depicts another example of the info tab 1620A, i.e., the info panel 1412A, having a focus in accordance with some embodiments of the present disclosure. When the info panel view 1620A has a focus, an info panel type, such as panel type 1704A may be presented in a detailed information region 2030. Panel type 1704A may be presented when the content displayed in the content active area 1408 is associated with content having series information. The series panel type 1704A may include series information 2034A and 2034B, a view button 2012, a favorite button 2016, and a thumbnail display of the series information 2008. The series information 2034A and 2034B may comprise information related to or associated with content having series information, such as a TV series, a Movie series, or the like. The series information 2032A and 2034B may include the series name, a season, an episode number, a long description of the series, video format, audio format, rating, and series number. Of course additional information relating to a series may be displayed.

[0214] Moreover, an info panel 1412A content area 2028 may provide "Recommended" information in a list content area 2032. Recommended information may comprise content items corresponding to the recommended episodes or content, if any, based on a selected content. The content items may include a thumbnail, the name of a series, and a short description of the series.

[0215] Fig. 20D shows the thumbnail alignment in the block in the info panel 1412A in the detailed information region 2030. The embodiment shown may be used in the info panel 1412A when the user is previewing a TV series episode or when the user is previewing a series. In some embodiments, the mode fit-content may be used for scaling. Additionally xhdpi 10 dp may be positioned between any text in the description. Other characteristics of the description in the

info panel 1412A detailed information region 2030 include the name of the series in large font size, 19sp, gray 1 font color (#F0F0F0). Characteristics of the other font in the info panel 1412A detailed information region 2030 may be in medium font size, 15sp; gray 1 font color (#F0F0F0); and right alignment. The description of the information in the list content area 2032 may be in medium font size 15sp; gray 1 font color (#F0F0F0); and right alignment. These fonts maybe used when the user is previewing a TV series episode or when the user is previewing a series.

[0216] In accordance with some embodiments of the present disclosure, application panel 1412 may display recommended content when the recommended tab 1620C has the focus, as illustrated in Figs. 21A and 21B. For example, based on one or more content that has been viewed by a user and/or based on content currently being viewed in the active content area 1408, recommended content may be displayed in application panel 1412. The recommended content may include content area 2104 containing an image thumbnail 2108, and information associated with the content, such as a series name and a short description.

[0217] In some embodiments, the recommended panel 1412C provides a collection of recommendations from the content provider. These recommendations are contextual and based on the current series. The order of the recommendations is controlled by the video on demand service. The type of recommendations shown is contextual to the media type in focus in the active content area 1408. The recommended panel 1412C provides the user with recommended contents related to the current active view. For example, if the user is watching Episode 5 of a TV series in video on demand, then the recommended panel 1412C provides recommended TV series related to Episode 5.

[0218] When a TV Series or episode is in focus (or playing) the recommended panel 1412C provides a vertical scrollable collection of series. The same rules apply for Variety Shows and Movies. The maximum number of items 2104 in the list is 20. The results are provided and ordered from the content provider. A Variety Show recommended panel 1412B may look the same as the TV Series recommended panel 1412C shown in Fig. 21A.

[0219] The recommended panel 1412C is vertically scrollable. The navigation panel bar 1604 is horizontally scrollable and the panel content area 1608 may be vertically scrollable. Additionally, as the recommended panel 1412C is used to navigate through various

recommendations in the application panel 1412, the recommended panel 1412C itself does not obstruct the user from viewing content displayed on the screen of the intelligent television.

[0220] The user can also use hot key to mark any applicable items as favorite, or remove it from favorites. The layout of recommended panel 1412C remains consistent across views. The red hot key may be a navigation button to go to the top of the panel (the first item selected in the list).

[0221] In accordance with some embodiments of the present disclosure, application panel 1412 may display content resulting from a user search when the tab 1620F has the focus, as illustrated in Fig. 22. The search panel 1412F allows the user to search for media within the video on demand space. For example, based on a search term or terms entered into a search box 2604, content matching the search term or terms may be returned to a user. Moreover, as the search panel 1412F is used to navigate through a search on the intelligent television, the search panel 1412F itself does not obstruct the user from viewing content displayed on the screen of the intelligent television. Prior to searching however, a content panel, such as content panel 1712A, may first be displayed. Content panel 1712A may contain a one or more previous search terms 2208 and display each specific search term 2212 for a user to navigate to and select. Therefore, if a user decides to select a previously searched term based on the previous searches 2208, search results matching the previously searched term may be displayed. The previous search terms are listed with most recent searched terms appearing on the top of the list. The maximum number of previous search terms displayed is 10. This is the view the user sees prior to filling in the search terms. Alternatively, or in addition, a user may enter one or more search terms into the term box 2604. The results of the search (not shown), either based on the search terms, or based on the previous search, may then be displayed to a user using a content panel, for example.

[0222] The search panel 1412F is vertically scrollable. The navigation panel bar 1604 is horizontally scrollable and the panel content area 1608 may be vertically scrollable. The hot keys 1612 for the search panel 1412F prior to searching may include a green hot key 1612B to remove a selected term 2212 from the search history and/or a blue hot key 1612A to clear all search history. The up and down arrows on the remote allow the user to scroll vertically through the search term list 2208. If a previous search term is in focus, pressing the select key on the remote initiates the search process with the selected search term and takes the user to the search results.

[0223] Fig. 23 is a flow diagram of an embodiment of a method 2300 for selecting and displaying one or more panels for viewing by a user. Method 2300 is in embodiments performed by a device, such as device 100. More specifically, one or more hardware and software components may be involved in performing method 2300. In one embodiment, one or more of the previously described modules perform one or more of the steps of method 2300. The method 2300 may be executed as a set of computer-executable instructions executed by a computer system and encoded or stored on a computer-readable medium. Hereinafter, the method 2300 shall be explained with reference to the systems, components, modules, software, etc. described in conjunction with Figs. 1-22.

[0224] Method 2300 may continuously flow in a loop, flow according to a timed event, or flow according to a change in an operating or status parameter. Method 2300 is initiated at step 2304. Step 2304 may flow to step 2306 where an intelligent television 100 receives an input from a remote or channel changer associated with a user. Based on the remote or channel changer input, the step 2306 may flow to step 2308, where the input received is analyzed. If, at step 2308, it is determined that the analyzed input corresponds to the display of an application panel, such as application panel 1412, then, at step 2310, the content displayed in the active content area 1408 and/or the source is analyzed. At step 2312, a panel type is selected; the panel type may correspond to one or more panel types as described with reference to Figs 17A-17B. At step 2314, content information to populate the panel type is retrieved, and the content is then displayed at step 2316 in the application panel. After step 2316, additional focus information may be received at step 2318. Upon receiving additional focus information, the method 2400 may repeat at step 2310, where the content in the active content area and/or the source is analyzed. Alternatively, or in addition, the method 2400 may end at 2330.

[0225] Fig. 24 is a flow diagram of an embodiment of a method 2400 for displaying an application panel. Illustratively, the elements described herein may be stored-program-controlled entities, and a computer or processor 364 can perform the method 2400 of Fig. 24 and the processes described herein by executing program instructions stored in a tangible computer readable storage medium, such as a memory 308 or data storage 312. Although the method 2400, described in Fig. 24, is shown in a specific order, one of skill in the art would recognize that the method in Fig. 24 may be implemented in a different order and/or be implemented in a multi-threaded environment. Moreover, various steps may be omitted or added based on

implementation. Hereinafter, the method 2400 shall be explained with reference to the systems, components, modules, software, etc. described in conjunction with Figs. 1-23.

[0226] The method 2400 starts 2401 when a user sends a request to activate a panel. The user may activate a panel through various commands, such as by selecting the application panel button, touching the touch sensitive display screen 212, by speaking a voice command, by providing a gesture using the gesture capture regions 224, 228, by operating a pointing device 168i, and/or the like. An input event manager 508 is operable to receive the request 2402 and is operable to determine the type of panel requested 2404. After determining the type of panel requested 2404, the input event manager 508 can send the request to the panel manager 536. The panel manager is operable to retrieve metadata from memory 308 associated with the media item that had focus when the user requested activation of the panel and based on the type of panel requested. If the Intelligent TV 100 recognizes the individual user, the panel manager 536 may retrieve metadata specific to the recognized individual user from the local database 1340 and/or database 640. The panel manager 536 may also retrieve metadata from media data service 628 that is in communication with one or more internal and/or external content providers 616. After the personal metadata is retrieved, the panel manager can display the requested application panel type 2406.

[0227] After the user has activated a panel, the user may request a new panel type by navigating left or right using various commands. The input event manager 508 is operable to determine if a user requests a new panel type. If a user requests a new panel type 2408, the input event manager receives the request 2402, determines the type of panel requested 2404, and sends the request to the panel manager 536 which can display the requested panel type 2406.

[0228] A user may navigate focus within the application panel to display more information about an item, change tabs, or to move focus to an action button. The input event manager 536 is operable to determine 2410 focus has moved. If focus has moved, the input event manager is operable to determine a new focus location 2412. If the new focus location requires a change to the information displayed in the panel, the input event manager is operable to send the new focus location to the panel manager 536 which can update the panel. The panel manager 536 may resize and or reposition the panel and the information and/or lists displayed within the panel as necessary when focus is moved.

[0229] The user may use hot keys 1612A-D or action buttons such as, but not limited to, the view button or add to favorites button. The input event manager 508 is operable to determine 2414 if a user has selected a hot key or an action button and to determine the action required 2416. The input event manager 508 may then send a requested action to the panel manager 536, the application panel application 456, and/or the settings panel 524, as necessary. For example, if the user selects a favorite button or hot key to tag a media item with focus as a favorite, the input event manager 508 would receive the request 2414 and send the request 2416 to the application panel application which may update the metadata stored in memory 308 to tag the media item as a favorite.

[0230] If a user navigated focus to an action button or a media item in a list displayed by the panel 2410, the user may select the button or media item with focus to make a media item selection and view the selected media item. A user may also press a hot key to make a media item selection. When a panel tab selection is made 2418, the input event manager 508 can receive the selection and determine the actions required. The input event manager 508 may send the selection to the user interface application 468 which may display 2420 the selected tab. After displaying the selected tab in the application panel, the tab content information may be requested. The input event manager 508 may send the content information to the user interface application 468 which may display the tab content information in the tab.

[0231] The user may send a command to exit or dismiss 2422 the application panel and, if so, the input event manager 508 may send the command to the panel manager 536 which may dismiss or hide 2424 the application panel and the process 2400 may then end 2426. Of course, one of skill in the art will recognize that the user can send a command to exit the application panel at any point in method 2400.

[0232] Fig. 25 shows a flow diagram depicting an info panel presentation method 2500 in accordance with embodiments of the present disclosure. The method 2500 begins at step 2504 and proceeds when the Intelligent TV 100 receives input to initiate the info panel presentation (step 2508). In some embodiments, the info panel may be initiated by a user providing an input via a remote control or other input device. In one example, a user may activate the application panel 1412 by providing an input via the remote control or other device. Once the application panel is presented to the Intelligent TV 100, the user may navigate along the application panel navigation bar 1604 and shift the select-focus to the info panel region 1620A. In another

example, a user can provide an input via a hotkey, or other button, associated with a remote control or other device that may cause the application panel 1412 to display the info panel directly. In other words, the user would not be required to navigate through regions on the application panel navigation bar 1604 to display the info panel. In yet another example, the info panel may be automatically displayed by the Intelligent TV 100 in response to detecting a condition stored in rules.

[0233] Next, the info panel presentation layout is determined by the Intelligent TV 100 (step 2512). This determination may be based at least partially on the input that initiated the info panel presentation. For example, if an input is provided to display a video on demand-based info panel, the Intelligent TV 100 would determine a video on demand -based info panel to present via the application panel 1412. On the other hand, if an input is provided to display a time-based info panel, the Intelligent TV 100 would determine to present a time-based info panel via the application panel 1412. Rules stored in a memory associated with the Intelligent TV 100 may dictate the presentation layout. In some embodiments, the rules stored in a memory may include one or more info panel information layout templates. The one or more info panel information layout templates may correspond to a layout template that arranges content that makes up the info panel information. As can be appreciated, the info panel information layout template may be associated with a specific info panel presentation input and/or video on demand content playing in the content view area 1408 as an info panel presentation input is received. In one embodiment, an info panel presentation input may be matched to stored info panel inputs to determine a select info panel information layout template for the presentation of the info panel information.

[0234] In some embodiments, the info panel presentation layout may include at least one position associated with content that makes up the info panel information. The at least one position may correspond to a position of the content within a video on demand application panel 1412. In some embodiments, the info panel presentation layout may include specific content that makes up the info panel information. For example, an info panel presentation layout may be determined to include a thumbnail graphic, a preview window, and a time scale. In another example, the info panel presentation layout may be determined to present the info panel information in a particular arrangement, position, location, space, size, and/or combinations thereof relative to the application panel 1412.

[0235] The method 2500 continues by retrieving info panel information from at least one source (step 2516). In some cases, the Intelligent TV 100 may retrieve program information from over-the-air channel signals. Typically, the program information provided in such signals is limited to simple text-based descriptions. However, the Intelligent TV 100 may be connected to a network (e.g., the Internet) and as such, may retrieve detailed program information, graphics, additional content, multi-media, and the like. Accordingly, the Intelligent TV 100 may compare, select, and/or aggregate information retrieved from at least one source.

[0236] At step 2520, the Intelligent TV 100 presents the info panel information retrieved in step 2516 via the video on demand application 456 and panel 1412. The info panel information may be presented in the predetermined info panel presentation layout. Additionally or alternatively, the arrangement of the presented info panel information may be altered via user input. The method 2500 ends at step 2524.

[0237] Fig. 26 shows a flow diagram depicting an information panel presentation method 2600 in accordance with embodiments of the present disclosure. The method 2600 begins at step 2604 and proceeds by recognizing a select-focus and/or selected content via the application panel 1412 (step 2608). In some embodiments, the select-focus may correspond to a position of a user's cursor, or indicator 1640, on the application panel 1412. A select-focus may include a default focus associated with one or more of the fixed tab regions 1620. The select-focus may be moved via a user input from a remote control or other input device. One example of moving or shifting the select-focus may include providing a directional input via a remote control. Selected content may be recognized via an input provided in association with a selection-focus. Additionally or alternatively, selected content may be recognized by detecting an input that is independent of a selection-focus. For example, although an indicator 1640 may be associated with a portion of the application panel 1412, a user may provide an input corresponding to a different portion of the application panel 1412. In this example, a user may select a program hotkey, provide a directional input (e.g., up, down, left, right, angles, and combinations thereof), a swipe input, and/or a hold input to select content.

[0238] If the select-focus is associated with an info tab region 1620A, the method 2600 continues by receiving an input to initiate the information presentation via the application panel 1412 (step 2612). The input may be provided by a user via a remote control or other input device. In some embodiments, the user-provided input may be a selection input based on a

corresponding position of a select-focus associated with the navigation bar 1604. In other embodiments, an informational input may be provided via an information button associated with a remote control or other input device. In this case, a select-focus may not be required to display informational content via the video on demand application panel 1412. Additionally or alternatively, the input may be provided via the Intelligent TV 100 in response to a condition. For example, a timer may be configured to change from video on demand content to a live TV channel on the Intelligent TV 100 at a given time. Once the channel is changed, the info tab 1620A may be automatically selected and information may be shown via the application panel 1412. This automatic selection and presentation may be provided by one or more of the components associated with the Intelligent TV 100. As can be appreciated, rules and/or preferences may be used to determine the automatic selection and/or presentation of information via the info panel tab 1620A and the application panel 1412.

[0239] Upon receiving an input to initiate the information presentation via the application panel 1412, the method 2600 continues by determining the presentation of information based at least partially on the selection (step 2616). The presentation of information may include, but is not limited to, a layout, a graphical representation, selected fields, descriptions, and the like. As such, certain presentations of information may be governed by the content related to the selection input. In one example, a selection input may be provided to show information relating to content playing via video on demand in the active content area 1408. Continuing this example, if a movie is playing in the active content area 1408, the information presentation selected for the application panel 1412 may include a movie name, a description, a cast list, a movie rating, a start and end time, and more. On the other hand, if a TV series is playing in the active content area 1408, the information presentation selected for display in the application panel 1412 may include the TV series name, a default image, the number of episodes in a series, the episode number of the currently playing episode, the season number, a description of the TV series and/or the specific episode, etc. In some embodiments, a size of the active content area 1408 may include the total viewable area of the Intelligent TV 100 display.

[0240] The method 2600 continues by retrieving the information presentation content from at least one source (step 2620). For instance, if the information presentation content includes a description of the content playing on video on demand, the Intelligent TV 100 may retrieve this information from at least one service provider. Typically, such information may be included in

the data accompanying the video on demand content. Additionally or alternatively, if the information presentation content includes "recommended" or "favorite" content, the Intelligent TV 100 may refer to a memory where such content may be stored. In one embodiment, the memory may be associated with the hardware of the Intelligent TV 100. In some cases, this content may be stored in a memory remote from the Intelligent TV 100, in which case, the Intelligent TV 100 and its various components may be caused to communicate across a network to retrieve the content. Among other things, the content retrieved across the network may include, but is in no way limited to, content information, thumbnail graphics, etc. One example of the network may include, but is not limited to, the Internet.

[0241] The exemplary systems and methods of this disclosure have been described in relation to one or more embodiments of an application panel described with respect to tabs for displaying panel views such as an info panel, a favorites panel, a recommended panel, a genre panel, a new panel, and a search panel. However, to avoid unnecessarily obscuring the present disclosure, the preceding description omits a number of known structures and devices. This omission is not to be construed as a limitation of the scopes of the claims. Specific details are set forth to provide an understanding of the present disclosure. It should however be appreciated that the present disclosure may be practiced in a variety of ways beyond the specific detail set forth herein.

[0242] Furthermore, while the exemplary aspects, embodiments, and/or configurations illustrated herein show the various components of the system collocated, certain components of the system can be located remotely, at distant portions of a distributed network, such as a LAN and/or the Internet, or within a dedicated system. Thus, it should be appreciated, that the components of the system can be combined into one or more devices, such as a such as a cable box or other set top box used to provide content to a television, a smart device used to watch streamed shows, and or other smart devices used to watch content, or collocated on a particular node of a distributed network, such as an analog and/or digital telecommunications network, a packet-switch network, or a circuit-switched network. It will be appreciated from the preceding description, and for reasons of computational efficiency, that the components of the system can be arranged at any location within a distributed network of components without affecting the operation of the system. For example, the various components can be located in a switch such as a PBX and media server, gateway, in one or more communications devices, at one or more users' premises, or some combination thereof. Similarly, one or more functional portions of the system

could be distributed between a telecommunications device(s) and an associated computing device.

[0243] Furthermore, it should be appreciated that the various links connecting the elements can be wired or wireless links, or any combination thereof, or any other known or later developed element(s) that is capable of supplying and/or communicating data to and from the connected elements. These wired or wireless links can also be secure links and may be capable of communicating encrypted information. Transmission media used as links, for example, can be any suitable carrier for electrical signals, including coaxial cables, copper wire and fiber optics, and may take the form of acoustic or light waves, such as those generated during radio-wave and infra-red data communications.

[0244] Also, while the flowcharts have been discussed and illustrated in relation to a particular sequence of events, it should be appreciated that changes, additions, and omissions to this sequence can occur without materially affecting the operation of the disclosed embodiments, configuration, and aspects.

[0245] A number of variations and modifications of the disclosure can be used. It would be possible to provide for some features of the disclosure without providing others.

[0246] For example in one alternative embodiment, the panel displayed to a user may comprise one or more combinations of the info panel, favorites panel, recommended panel, genre panel, new panel, and search panel. In another alternative embodiment, only one of an info panel, a favorites panel, a recommended panel, a genre panel, a new panel, and a search panel is displayed. In some embodiments, the application panel may be displayed with or without tabs.

[0247] In yet another embodiment, the systems and methods of this disclosure can be implemented in conjunction with a special purpose computer, a programmed microprocessor or microcontroller and peripheral integrated circuit element(s), an ASIC or other integrated circuit, a digital signal processor, a hard-wired electronic or logic circuit such as discrete element circuit, a programmable logic device or gate array such as PLD, PLA, FPGA, PAL, special purpose computer, any comparable means, or the like. In general, any device(s) or means capable of implementing the methodology illustrated herein can be used to implement the various aspects of this disclosure. Exemplary hardware that can be used for the disclosed embodiments, configurations and aspects includes computers, handheld devices, telephones (e.g., cellular, Internet enabled, digital, analog, hybrids, and others), and other hardware known in the art.

Some of these devices include processors (e.g., a single or multiple microprocessors), memory, nonvolatile storage, input devices, and output devices. Furthermore, alternative software implementations including, but not limited to, distributed processing or component/object distributed processing, parallel processing, or virtual machine processing can also be constructed to implement the methods described herein.

[0248] In yet another embodiment, the disclosed methods may be readily implemented in conjunction with software using object or object-oriented software development environments that provide portable source code that can be used on a variety of computer or workstation platforms. Alternatively, the disclosed system may be implemented partially or fully in hardware using standard logic circuits or VLSI design. Whether software or hardware is used to implement the systems in accordance with this disclosure is dependent on the speed and/or efficiency requirements of the system, the particular function, and the particular software or hardware systems or microprocessor or microcomputer systems being utilized.

[0249] In yet another embodiment, the disclosed methods may be partially implemented in software that can be stored on a storage medium, executed on programmed general-purpose computer with the cooperation of a controller and memory, a special purpose computer, a microprocessor, or the like. In these instances, the systems and methods of this disclosure can be implemented as program embedded on personal computer such as an applet, JAVA®, or CGI script, as a resource residing on a server or computer workstation, as a routine embedded in a dedicated measurement system, system component, or the like. The system can also be implemented by physically incorporating the system and/or method into a software and/or hardware system.

[0250] Although the present disclosure describes components and functions implemented in the aspects, embodiments, and/or configurations with reference to particular standards and protocols, the aspects, embodiments, and/or configurations are not limited to such standards and protocols. Other similar standards and protocols not mentioned herein are in existence and are considered to be included in the present disclosure. Moreover, the standards and protocols mentioned herein and other similar standards and protocols not mentioned herein are periodically superseded by faster or more effective equivalents having essentially the same functions. Such replacement standards and protocols having the same functions are considered equivalents included in the present disclosure.

[0251] The present disclosure, in various aspects, embodiments, and/or configurations, includes components, methods, processes, systems and/or apparatus substantially as depicted and described herein, including various aspects, embodiments, configurations embodiments, subcombinations, and/or subsets thereof. Those of skill in the art will understand how to make and use the disclosed aspects, embodiments, and/or configurations after understanding the present disclosure. The present disclosure, in various aspects, embodiments, and/or configurations, includes providing devices and processes in the absence of items not depicted and/or described herein or in various aspects, embodiments, and/or configurations hereof, including in the absence of such items as may have been used in previous devices or processes, e.g., for improving performance, achieving ease and\or reducing cost of implementation.

[0252] The foregoing discussion has been presented for purposes of illustration and description. The foregoing is not intended to limit the disclosure to the form or forms disclosed herein. In the foregoing Detailed Description for example, various features of the disclosure are grouped together in one or more aspects, embodiments, and/or configurations for the purpose of streamlining the disclosure. The features of the aspects, embodiments, and/or configurations of the disclosure may be combined in alternate aspects, embodiments, and/or configurations other than those discussed above. This method of disclosure is not to be interpreted as reflecting an intention that the claims require more features than are expressly recited in each claim. Rather, as the following claims reflect, inventive aspects lie in less than all features of a single foregoing disclosed aspect, embodiment, and/or configuration. Thus, the following claims are hereby incorporated into this Detailed Description, with each claim standing on its own as a separate preferred embodiment of the disclosure.

[0253] Moreover, though the description has included description of one or more aspects, embodiments, and/or configurations and certain variations and modifications, other variations, combinations, and modifications are within the scope of the disclosure, e.g., as may be within the skill and knowledge of those in the art, after understanding the present disclosure. It is intended to obtain rights which include alternative aspects, embodiments, and/or configurations to the extent permitted, including alternate, interchangeable and/or equivalent structures, functions, ranges or steps to those claimed, whether or not such alternate, interchangeable and/or equivalent structures, functions, ranges or steps are disclosed herein, and without intending to publicly dedicate any patentable subject matter.

What is claimed is:

1. A method for displaying content on a television, comprising:

receiving a first directional input via an input device associated with the television;

determining, based on a first direction associated with the first directional input, a content panel to display via the television;

retrieving, from a memory, a first content information for displaying in the content panel;

identifying at least one of a content source and a second content information currently being displayed via the television;

selecting a panel type based on the identified at least one of content source and second content information currently being displayed via the television;

retrieving, from memory, a third content information based on the selected panel type; and

displaying, via the television, the retrieved first content information and the third content information in the content panel based on the selected panel type.

2. The method of claim 1, further comprising:

retrieving, from a memory, a first image that is representative of the at least one of content source and second content information; and

displaying, via the television, the first image in the content panel.

3. The method of claim 1, wherein the content panel is an application panel.

4. The method of claim 1, further comprising:

receiving a second directional input via the input device; and

determining, based on a second direction associated with the second directional input, a second content panel to display via the television.

5. The method of claim 1, further comprising:

receiving a second directional input via the input device;

determining, based on a second direction associated with the second directional input, a source of at least one content information to be displayed in the content panel based on the selected panel type;

retrieving at least a portion of the at least one content information from the determined source; and

displaying, via the television, the content information associated with the determined source.

6. The method of claim 1, wherein the third content information comprises information associated with content information marked as favorite.

7. The method of claim 1, wherein the third content information comprises information associated with TV series episode content information.

8. The method of claim 1, wherein the selected panel type is a search panel.

9. The method of claim 1, wherein the selected panel type is a recommended panel.

10. A non-transitory computer readable information storage medium having stored thereon instructions that cause a computing system to execute a method of displaying content on a television, comprising:

receiving a first directional input via an input device associated with the television;

determining, based on a first direction associated with the first directional input, a content panel to display via the television;

retrieving, from a memory, a first content information for displaying in the content panel;

identifying at least one of a content source and a second content information currently being displayed via the television;

selecting a panel type based on the identified at least one of content source and second content information currently being displayed via the television;

retrieving, from memory, a third content information based on the selected panel type; and

displaying, via the television, the retrieved first content information and the third content information in the content panel based on the selected panel type.

11. The non-transitory computer-readable medium of claim 10, wherein the instructions further comprise:

retrieving, from a memory, a first image that is representative of the at least one of content source and second content information; and

displaying, via the television, the first image in the content panel.

12. The non-transitory computer-readable medium of claim 10, wherein the content panel is an application panel.

13. The non-transitory computer-readable medium of claim 10, wherein the third content information comprises information associated with content information marked as favorite.

14. The non-transitory computer-readable medium of claim 10, wherein the selected panel type is a search panel, and wherein the instructions further comprise:

receiving a second directional input via the input device;

determining, based on a second direction associated with the second directional input, a source of at least one content information to be displayed in the content panel based on the search panel;

retrieving at least a portion of the at least one content information from the determined source; and

displaying, via the television, the content information associated with the determined source.

15. The non-transitory computer-readable medium of claim 10, wherein the third content information comprises information associated with TV series episode content information, and wherein the selected panel type is an info panel associated with the TV series episode content information.

16. A system for displaying content on a television, comprising:

an input device associated with the television;

a memory; and

a microprocessor operable to:

receive a first directional input via an input device associated with the television;

determine, based on a first direction associated with the first directional input, a content panel to display via the television;

retrieve, from a memory, a first content information for displaying in the content panel;

identify at least one of a content source and a second content information currently being displayed via the television;

select a panel type based on the identified at least one of content source and second content information currently being displayed via the television;

retrieve, from memory, a third content information based on the selected panel type; and

display, via the television, the retrieved first content information and the third content information in the content panel based on the selected panel type.

17. The system of claim 16, wherein the microprocessor is further operable to:

retrieve, from a memory, a first image that is representative of the at least one of content source and second content information; and

display, via the television, the first image in the content panel.

18. The system of claim 16, wherein the content panel is an application panel.

19. The system of claim 16, wherein the microprocessor is further operable to:

receive a second directional input via the input device;

determine, based on a second direction associated with the second directional input, a source of at least one content information to be displayed in the content panel based on the selected panel type;

retrieve at least a portion of the at least one content information from the determined source; and

display, via the television, the content information associated with the determined source.

20. The system of claim 16, wherein the third content information comprises information associated with content information marked as favorite.

ABSTRACT

An intelligent television and methods for displaying content are disclosed. Specifically, a user may cause an application panel to be displayed, which displays content based on the panel tab selected by the user and the content being actively displayed on the intelligent television; that is, the layout, information, and content of the application panel depends on the content being displayed by the intelligent television. For example, upon receiving a selection from the user, the intelligent television may display one or more items of information that are associated with the content currently being displayed in an active content window. Additionally, the user may select a tab corresponding to specific information about the active content window. As the application panel is used to navigate through various screens in the intelligent television, the application panel itself does not obstruct the user from viewing content displayed on the screen of the intelligent television.

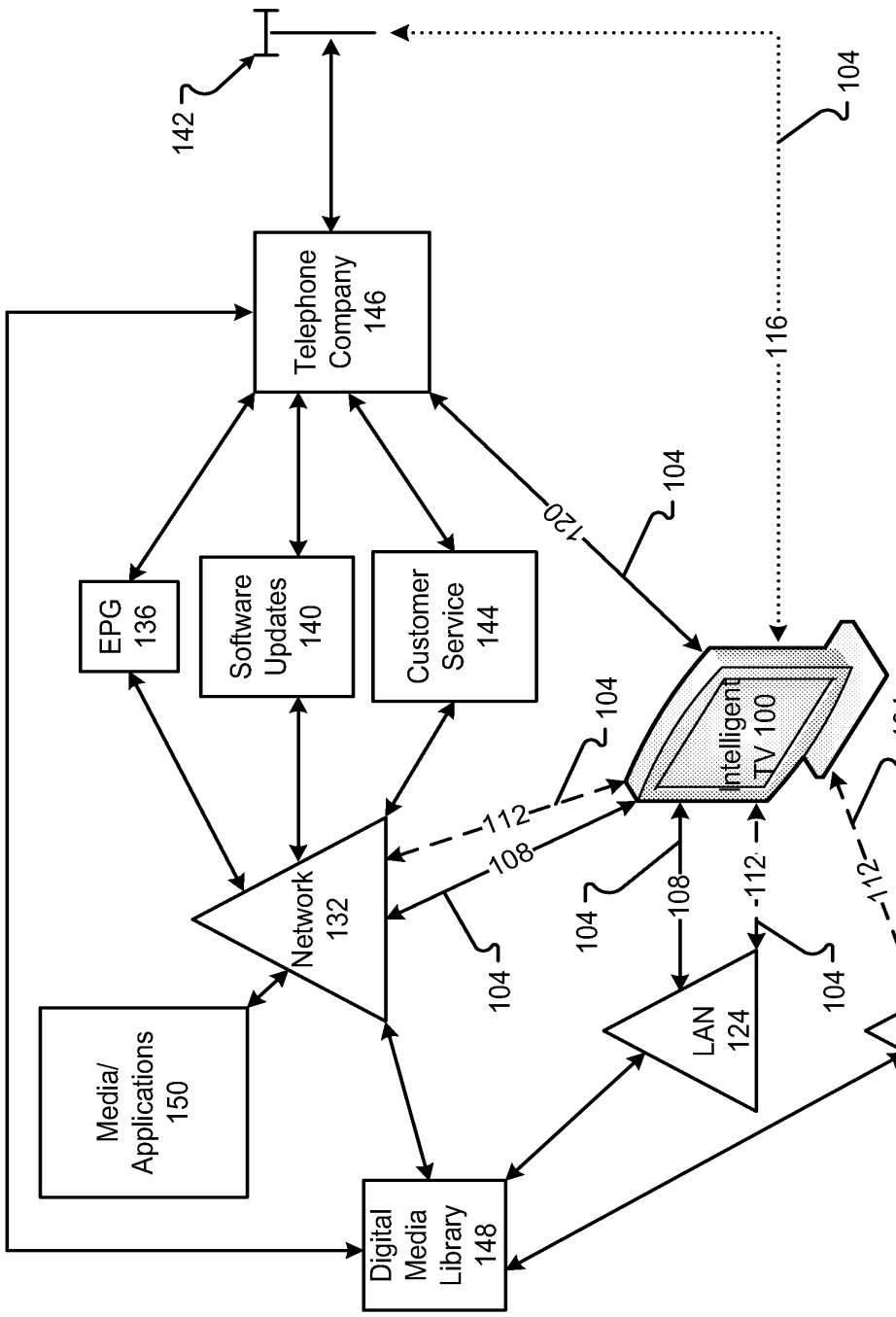
142
Telephone Company 146
104
116
120
104
EPG 136
Software Updates 140
Customer Service 144
104
Intelligent TV 100
104
112
108
Network 132
104
104
108
112
112
104
104
Media/ Applications 150
LAN 124
WLAN 128
Digital Media Library 148

Fig. 1A

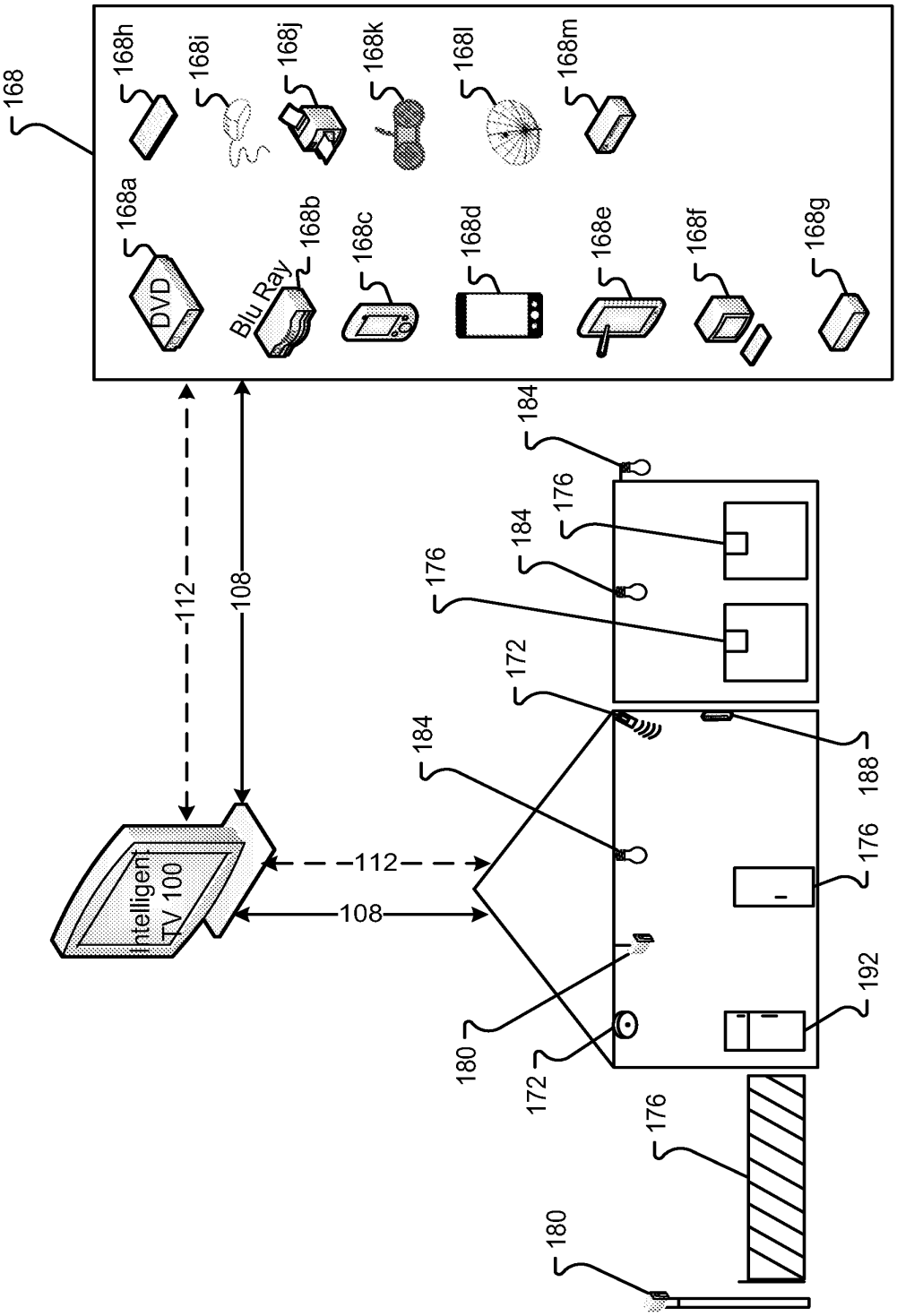
168
168a
DVD
168b
Blu Ray
168c
168d
168e
168f
168g
168h
168i
168j
168k
168l
168m
112
108
Intelligent TV 100
112
108
184
176
184
176
172
184
188
176
192
180
172
176
180

Fig. 1B

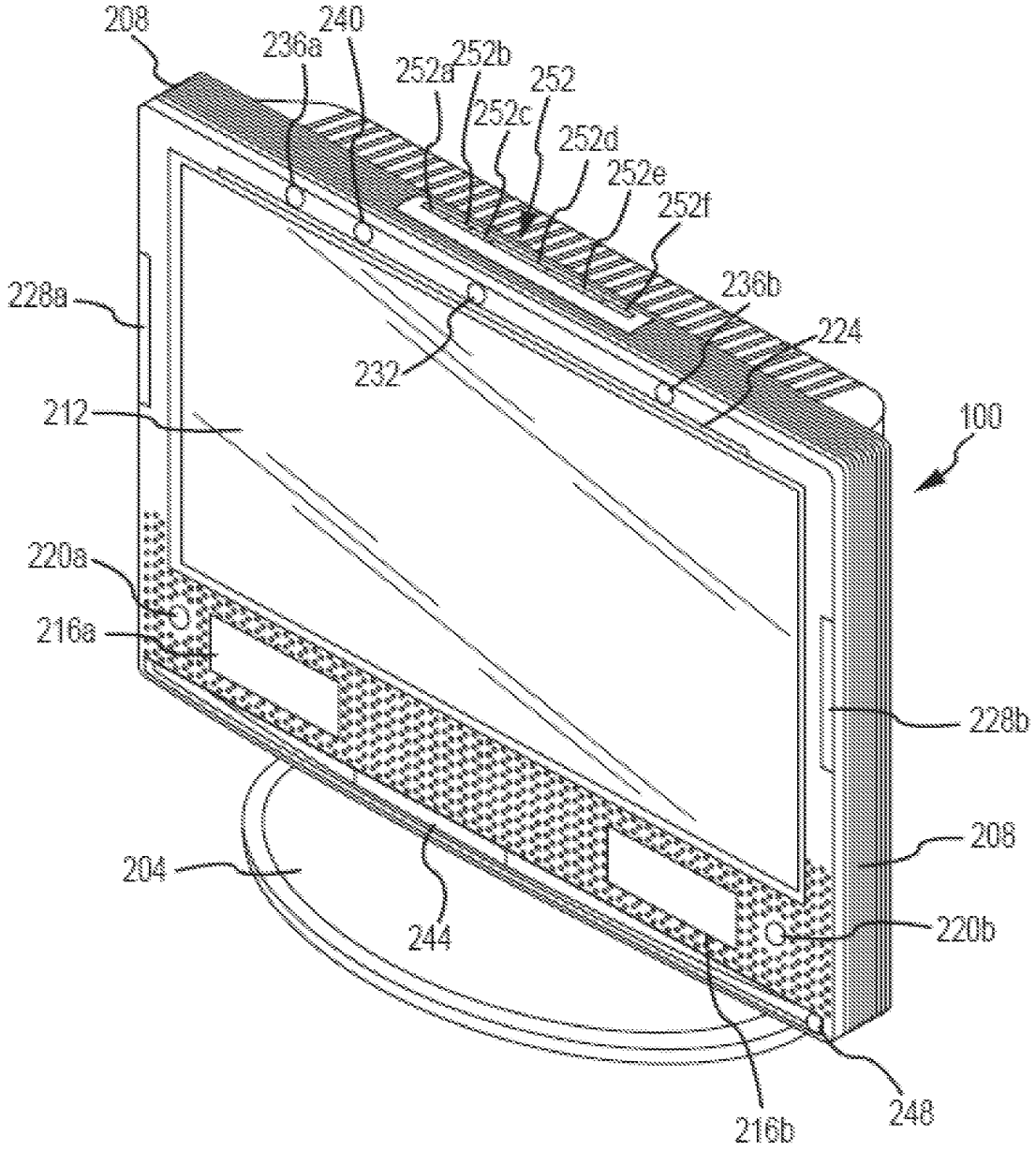
208
240
236a
252a
252b
252
252c
252d
252e
252f
236b
224
228a
232
212
100
220a
216a
228b
208
204
244
220b
248
216b

Fig. 2A

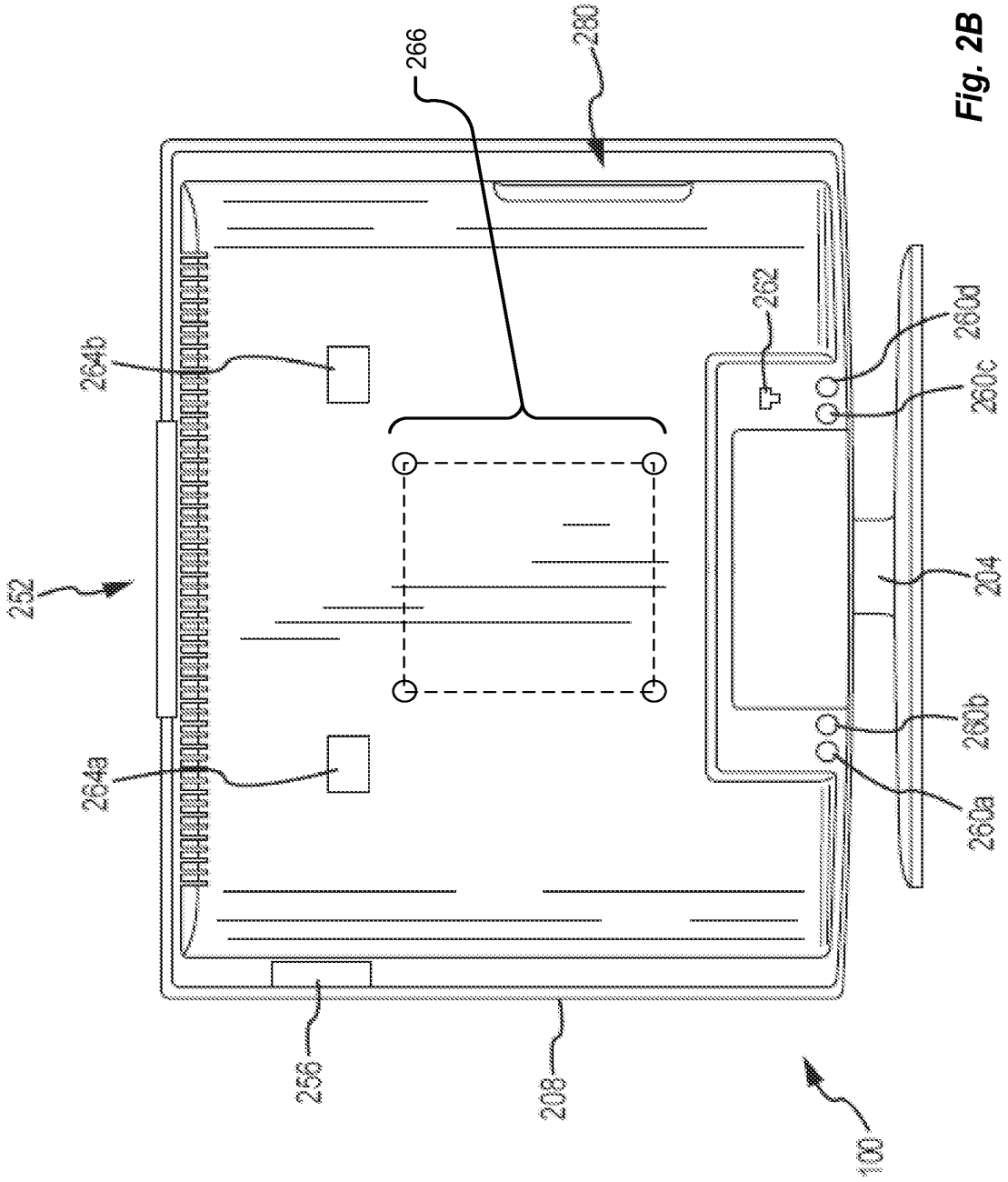

Fig. 2B

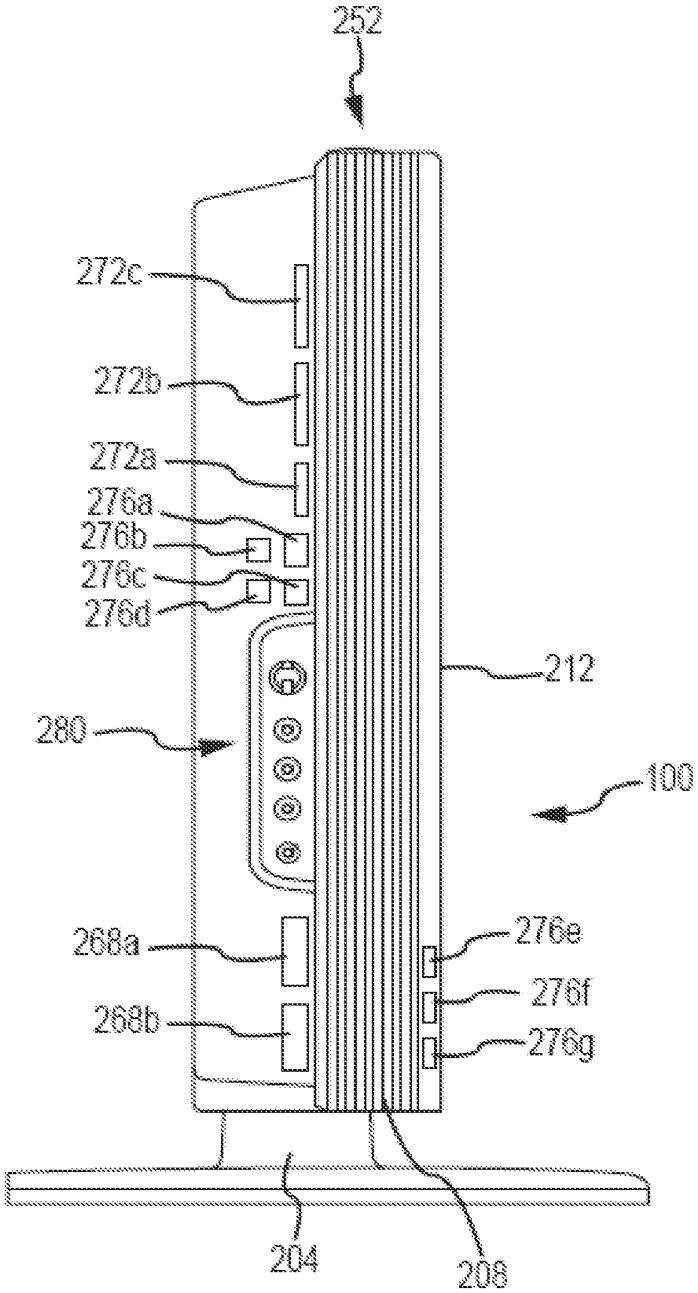
252
272c
272b
272a
276a
276b
276c
276d
212
280
100
268a
268b
276e
276f
276g
204
208

Fig. 2C

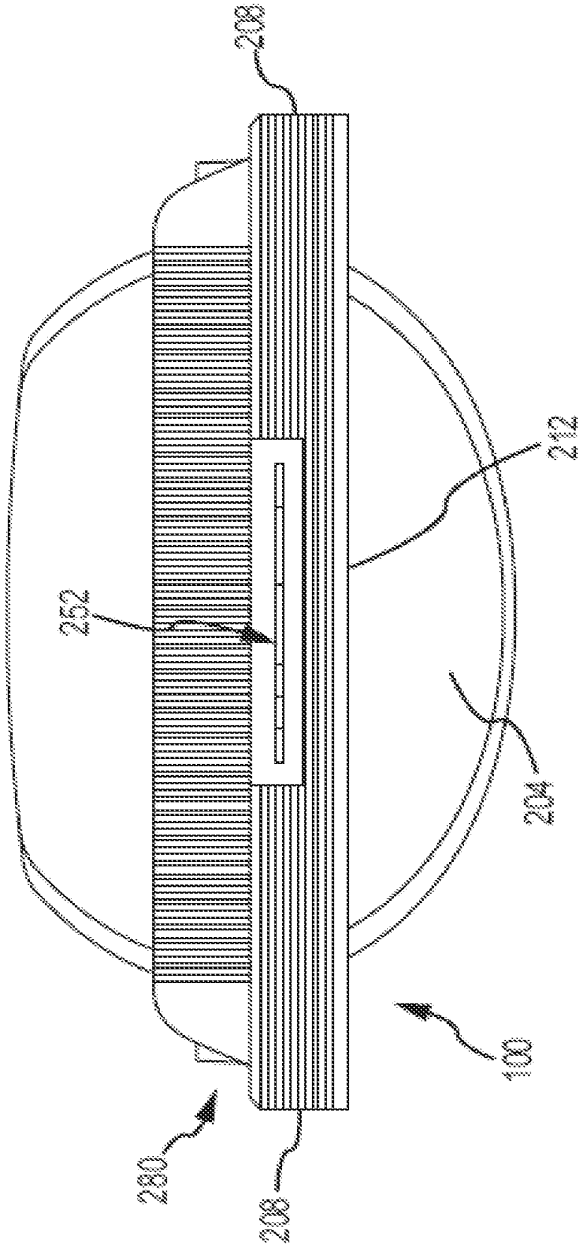

Fig. 2D

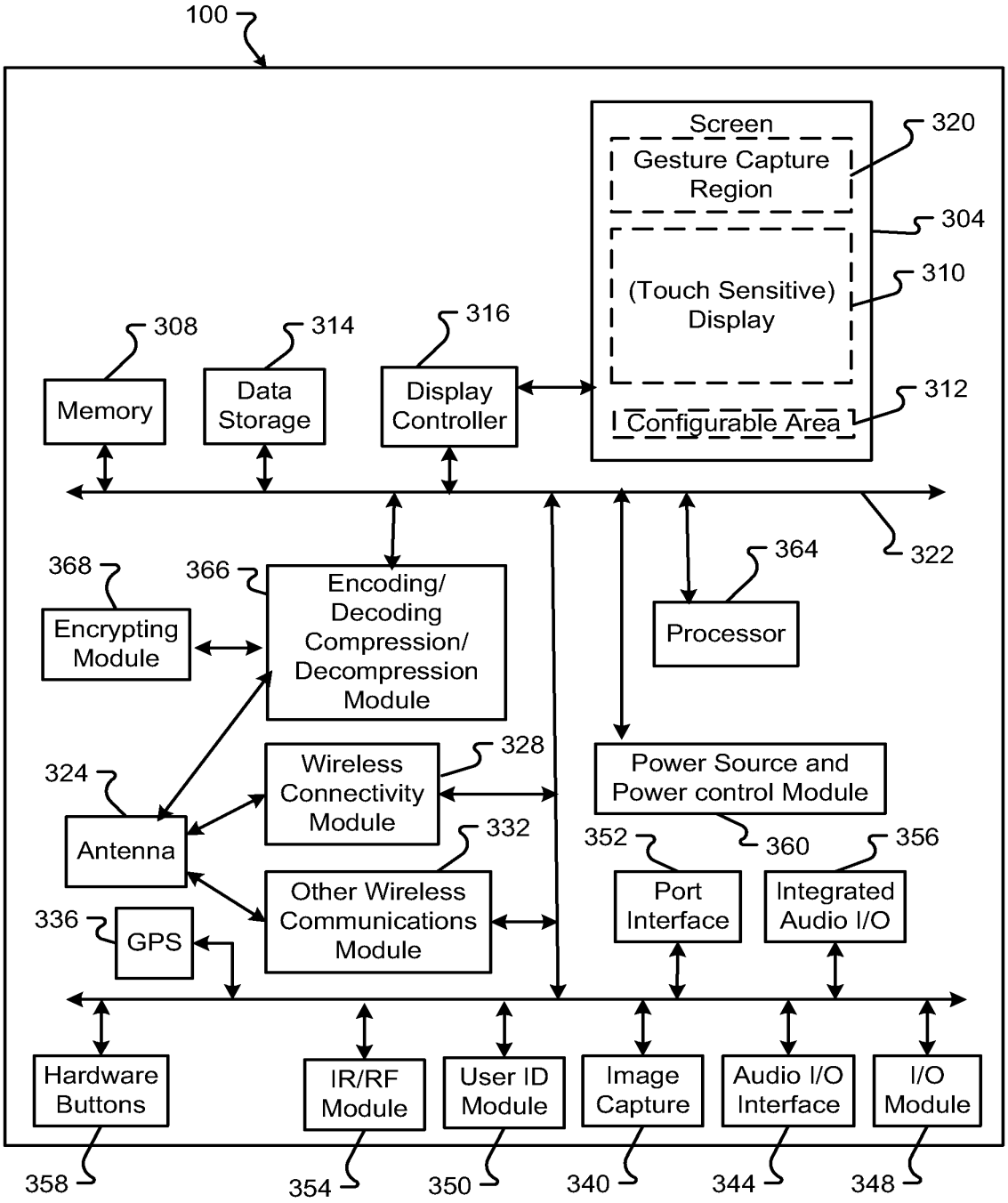
100
Screen
Gesture Capture Region
320
304
(Touch Sensitive) Display
310
Configurable Area
312
308
Memory
314
Data Storage
316
Display Controller
322
364
Processor
368
Encrypting Module
366
Encoding/ Decoding Compression/ Decompression Module
324
Antenna
Wireless Connectivity Module
328
Other Wireless Communications Module
332
Power Source and Power control Module
360
352
Port Interface
356
Integrated Audio I/O
336
GPS
Hardware Buttons
IR/RF Module
User ID Module
Image Capture
Audio I/O Interface
I/O Module
358
354
350
340
344
348

FIG. 3

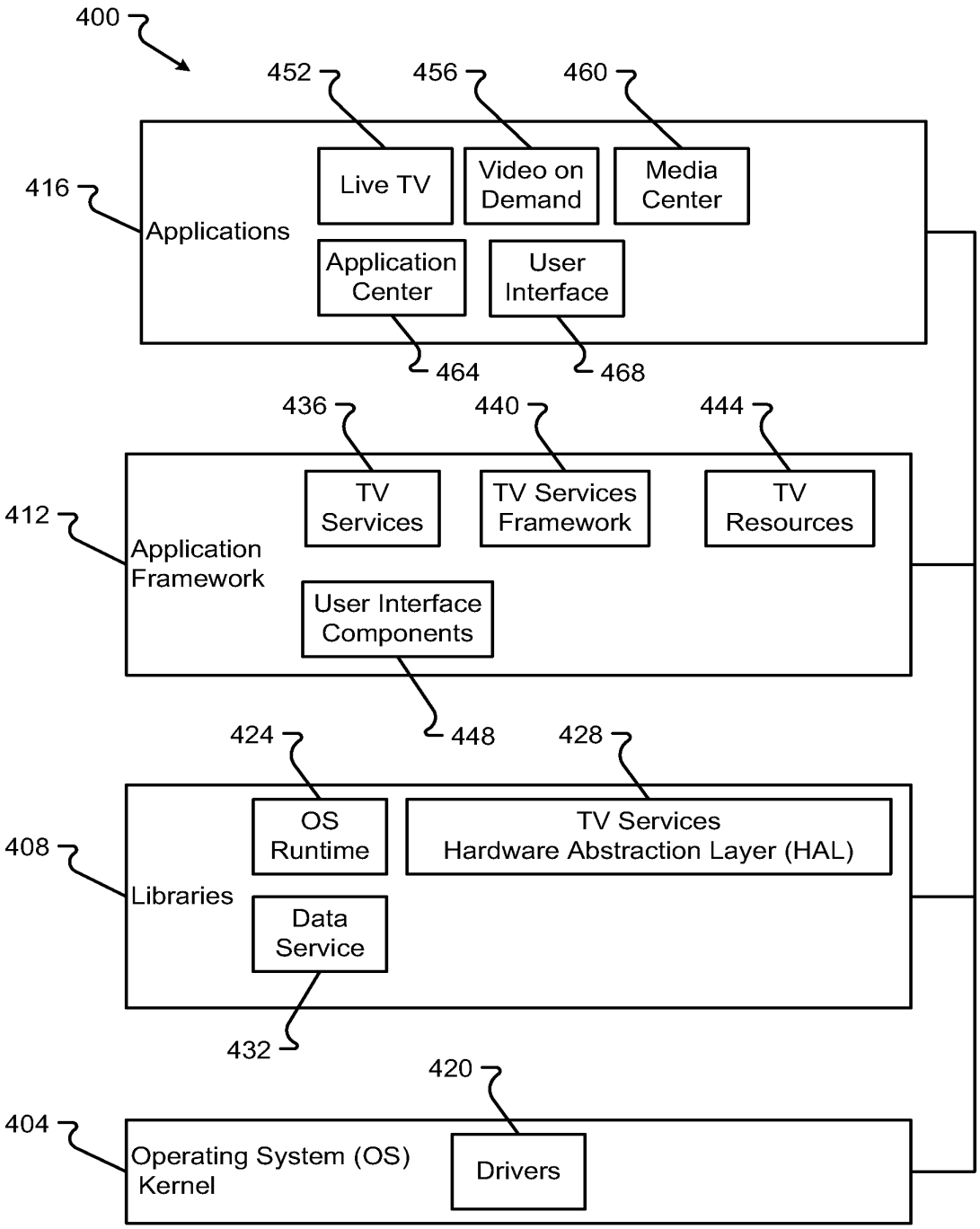
400
452
456
460
416
Applications
Live TV
Video on Demand
Media Center
Application Center
User Interface
464
468
436
440
444
412
Application Framework
TV Services
TV Services Framework
TV Resources
User Interface Components
448
424
428
408
Libraries
OS Runtime
TV Services Hardware Abstraction Layer (HAL)
Data Service
432
420
404
Operating System (OS) Kernel
Drivers

FIG. 4

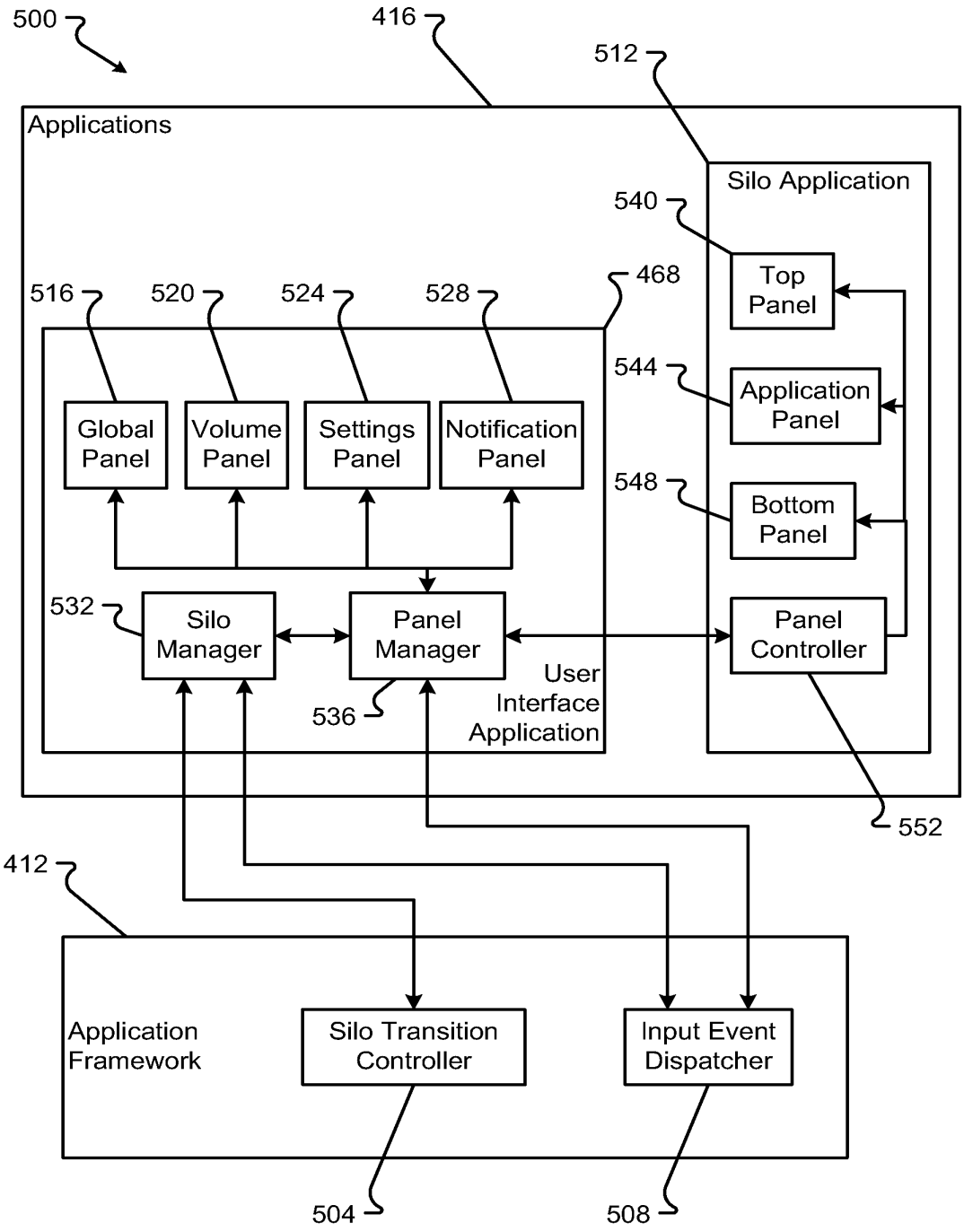
500
416
512
Applications
Silo Application
540
Top Panel
468
516
520
524
528
544
Application Panel
Global Panel
Volume Panel
Settings Panel
Notification Panel
548
Bottom Panel
532
Silo Manager
Panel Manager
Panel Controller
User Interface Application
536
552
412
Application Framework
Silo Transition Controller
Input Event Dispatcher
504
508

FIG. 5

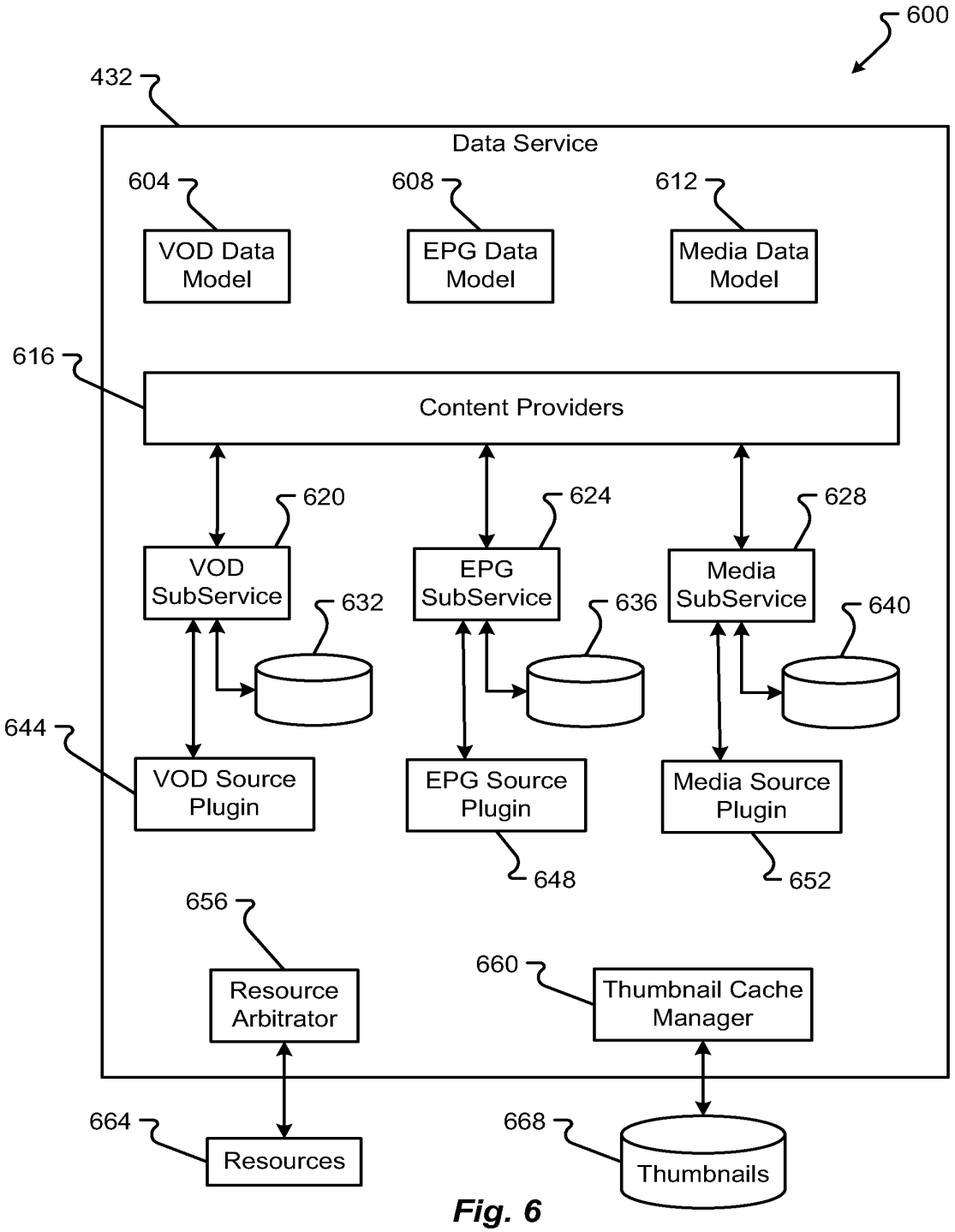
600
432
Data Service
604
VOD Data Model
608
EPG Data Model
612
Media Data Model
616
Content Providers
620
VOD SubService
624
EPG SubService
628
Media SubService
632
636
640
644
VOD Source Plugin
EPG Source Plugin
Media Source Plugin
648
652
656
Resource Arbitrator
660
Thumbnail Cache Manager
664
Resources
668
Thumbnails

Fig. 6

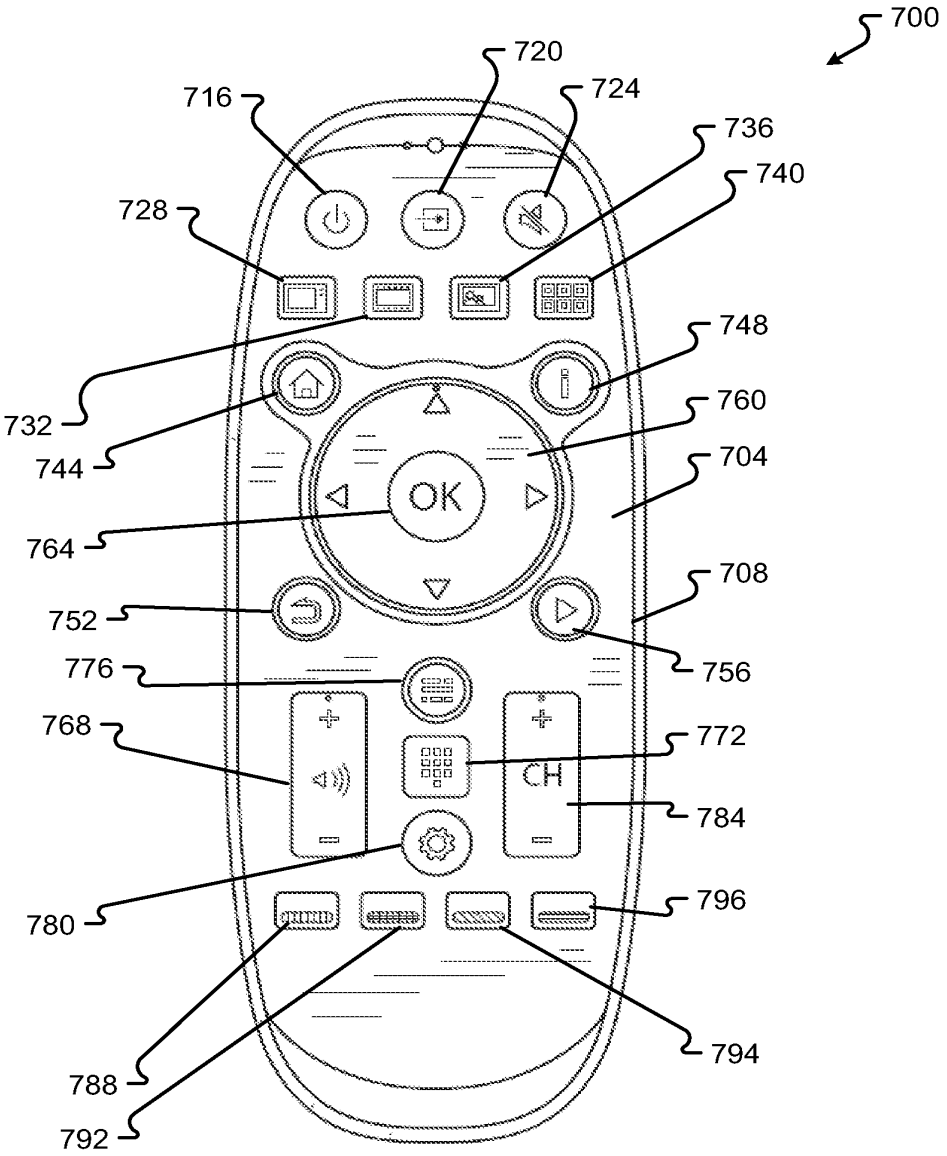
700
720
716
724
736
740
728
748
732
760
744
704
OK
764
708
752
756
776
768
772
CH
784
780
796
794
788
792

Fig. 7

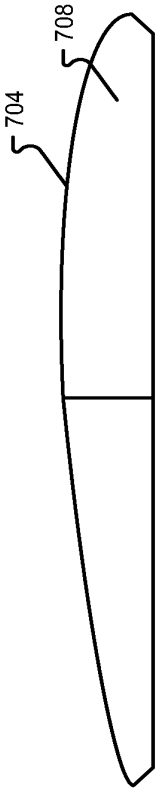

Fig. 8

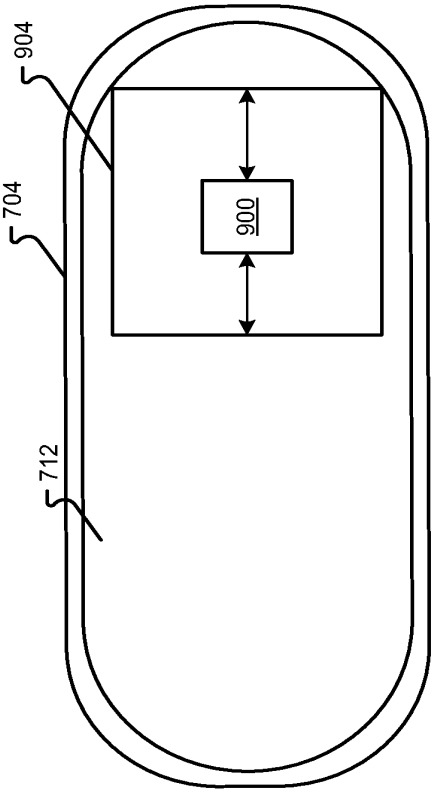

Fig. 9A

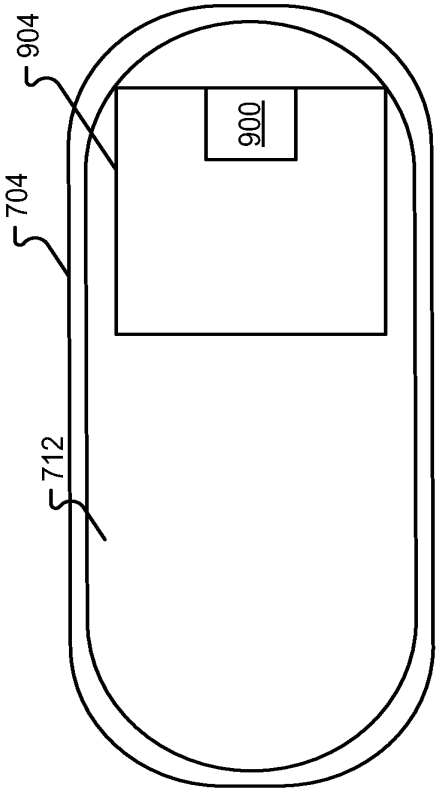

Fig. 9B

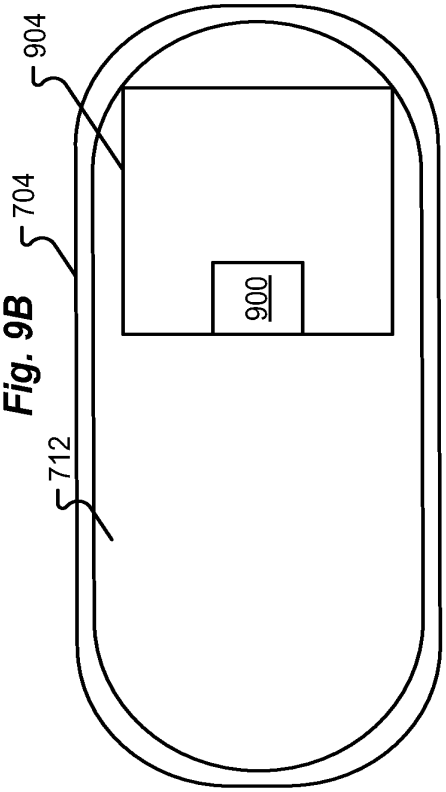

Fig. 9C

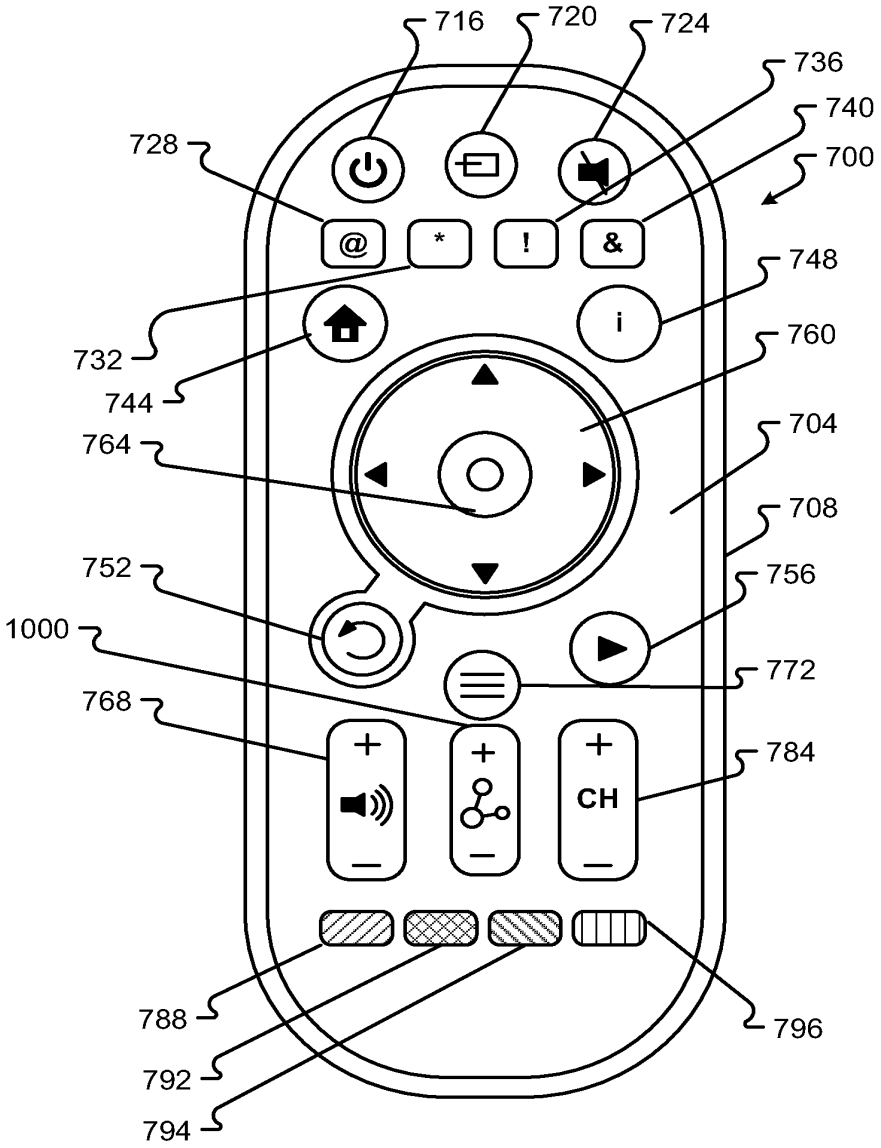
716
720
724
736
740
700
728
@
*
!
&
748
i
732
760
744
704
764
708
752
756
1000
772
768
784
CH
788
796
792
794

Fig. 10

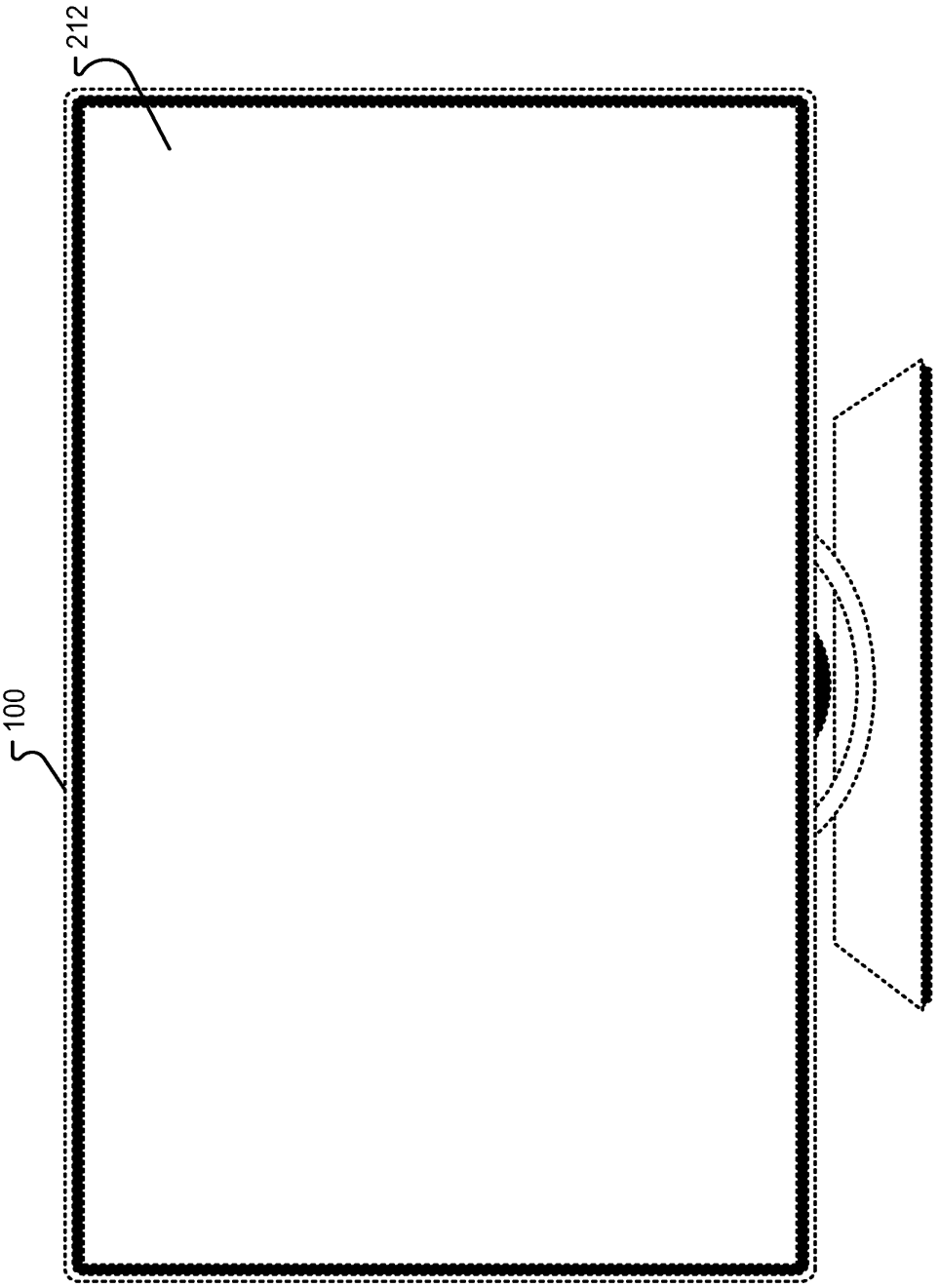

Fig. 11A

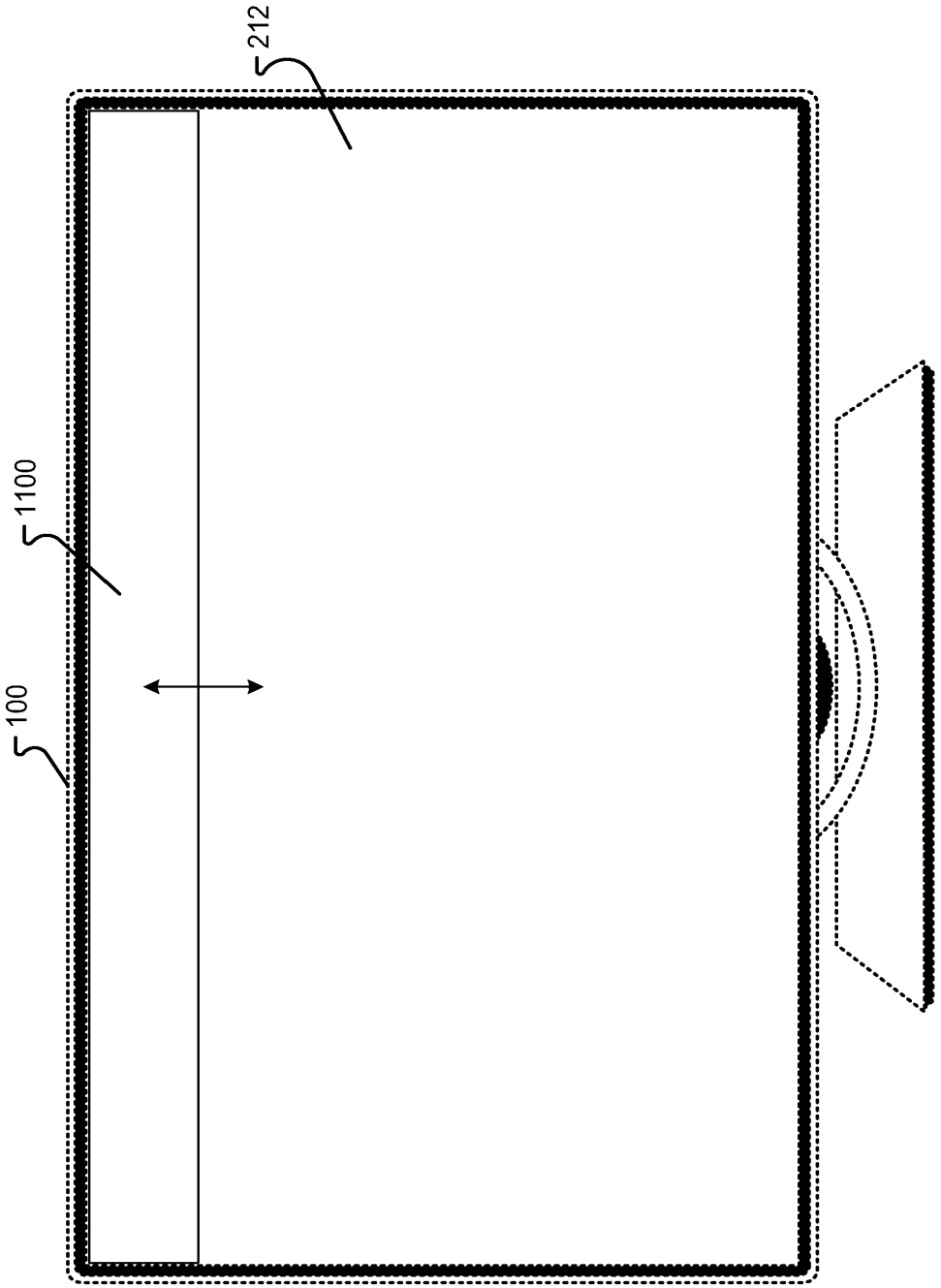

Fig. 11B

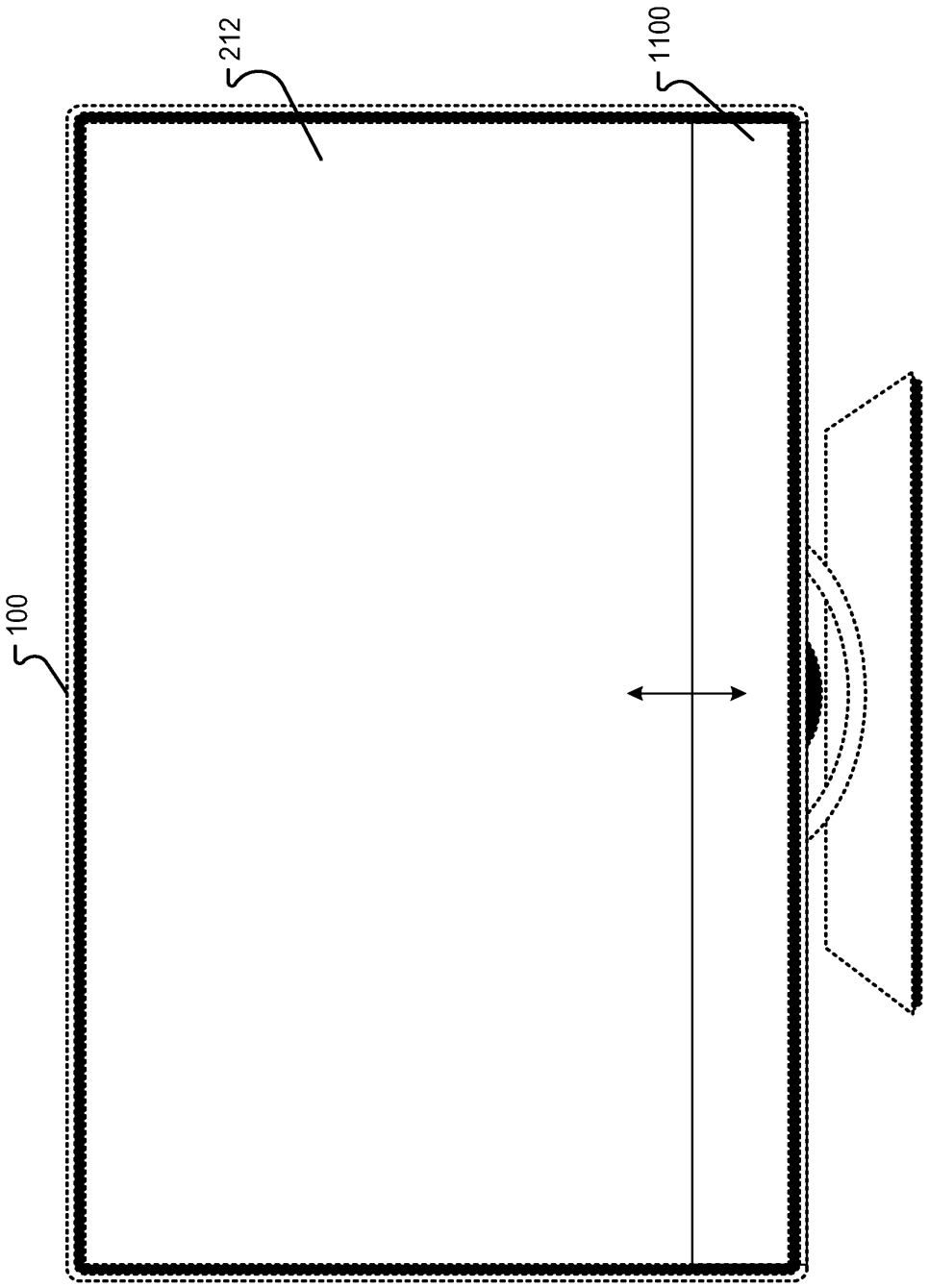

Fig. 11C

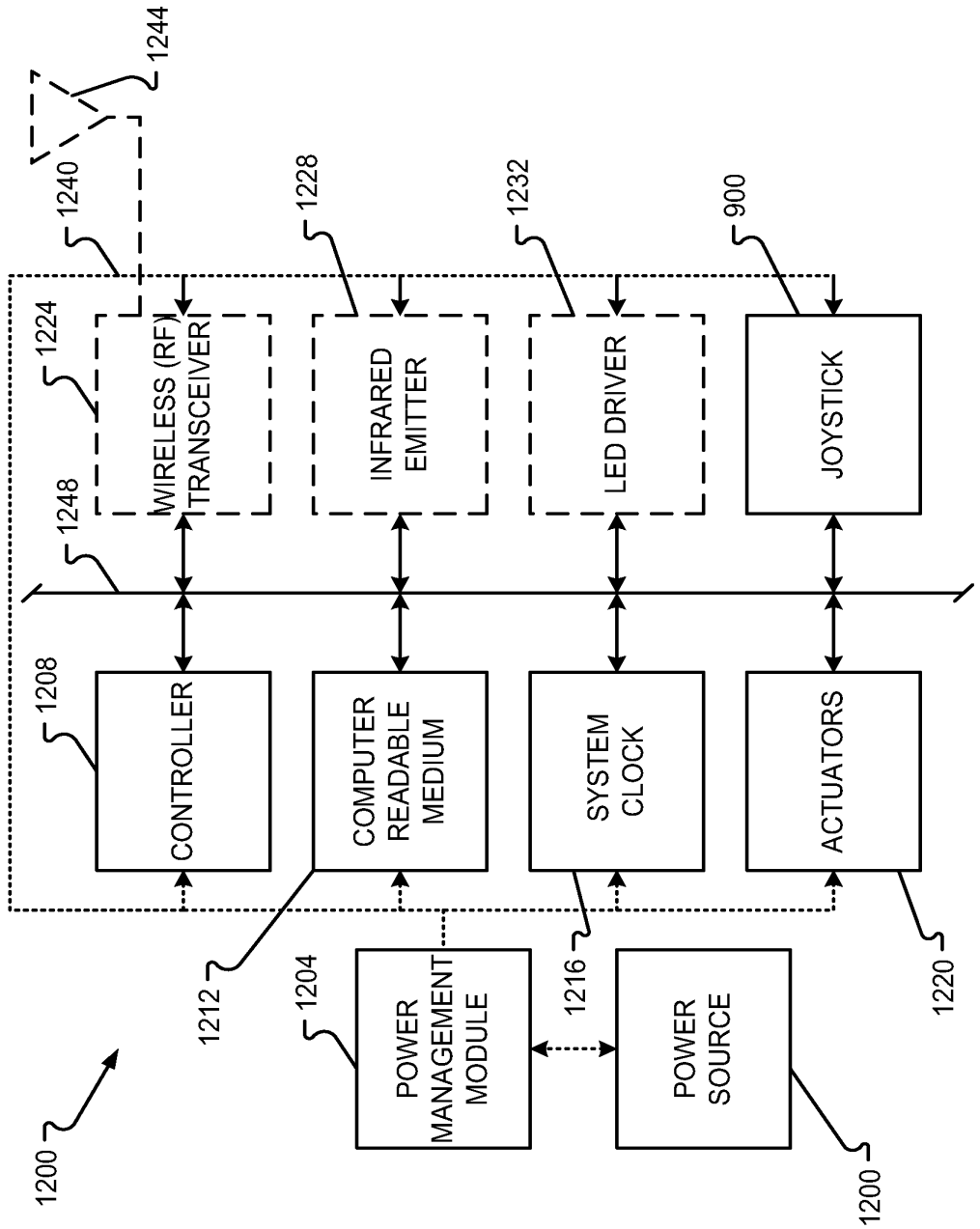
1244
1240
1224
1248
1208
WIRELESS (RF) TRANSCEIVER
CONTROLLER
1228
INFRARED EMITTER
COMPUTER READABLE MEDIUM
1232
LED DRIVER
SYSTEM CLOCK
900
JOYSTICK
ACTUATORS
1212
1204
POWER MANAGEMENT MODULE
1216
POWER SOURCE
1220
1200
1200

Fig. 12

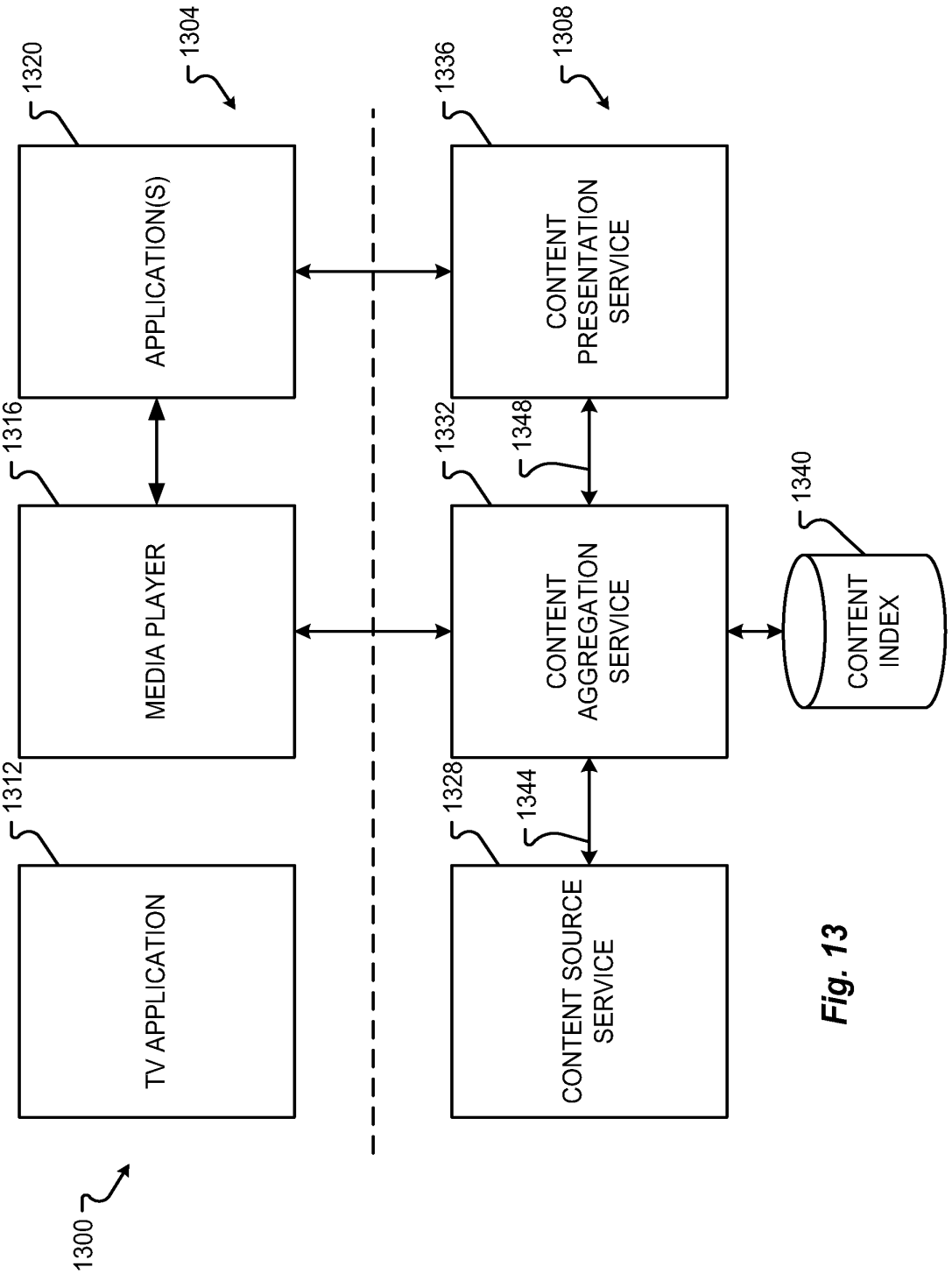
1300
1304
1308
1312
1316
1320
1328
1332
1336
1340
1344
1348
TV APPLICATION
MEDIA PLAYER
APPLICATION(S)
CONTENT SOURCE SERVICE
CONTENT AGGREGATION SERVICE
CONTENT PRESENTATION SERVICE
CONTENT INDEX

Fig. 13

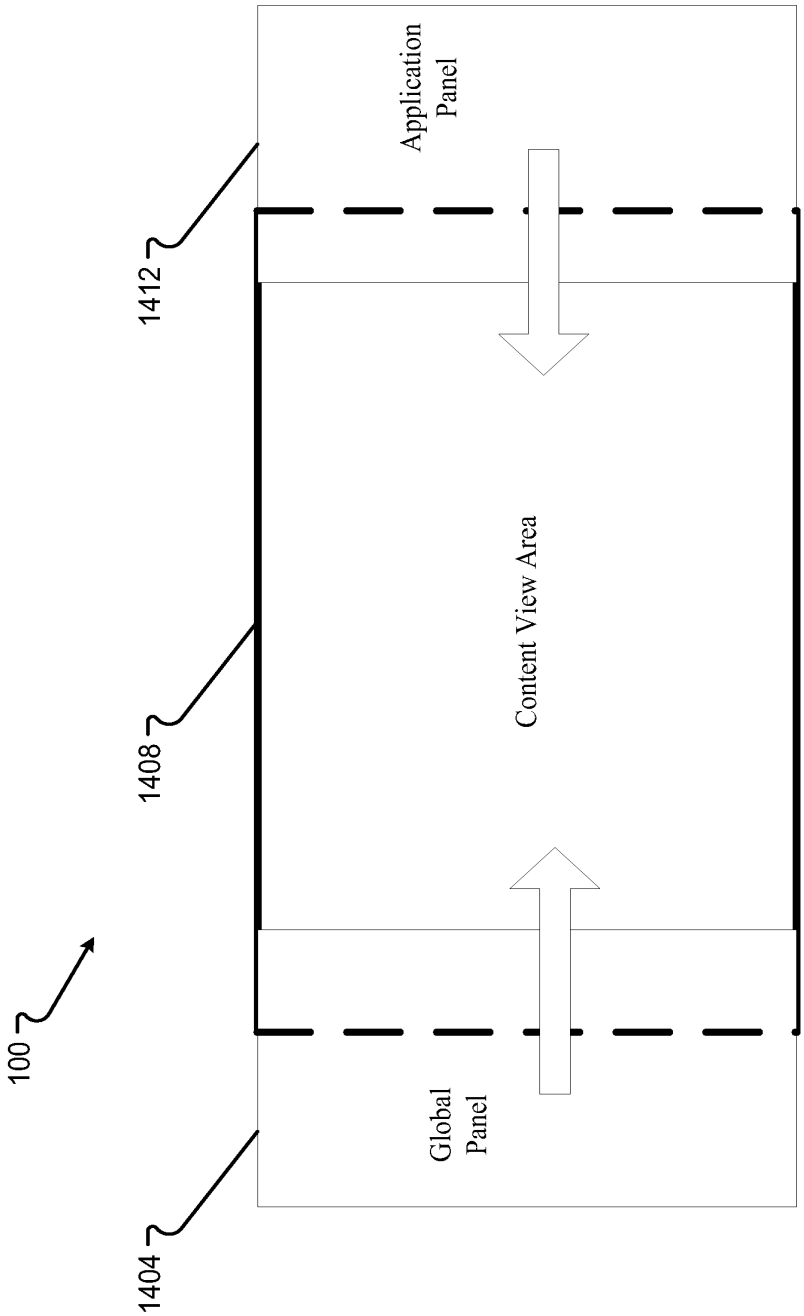
100
1404
1408
1412
Global Panel
Content View Area
Application Panel

Fig. 14

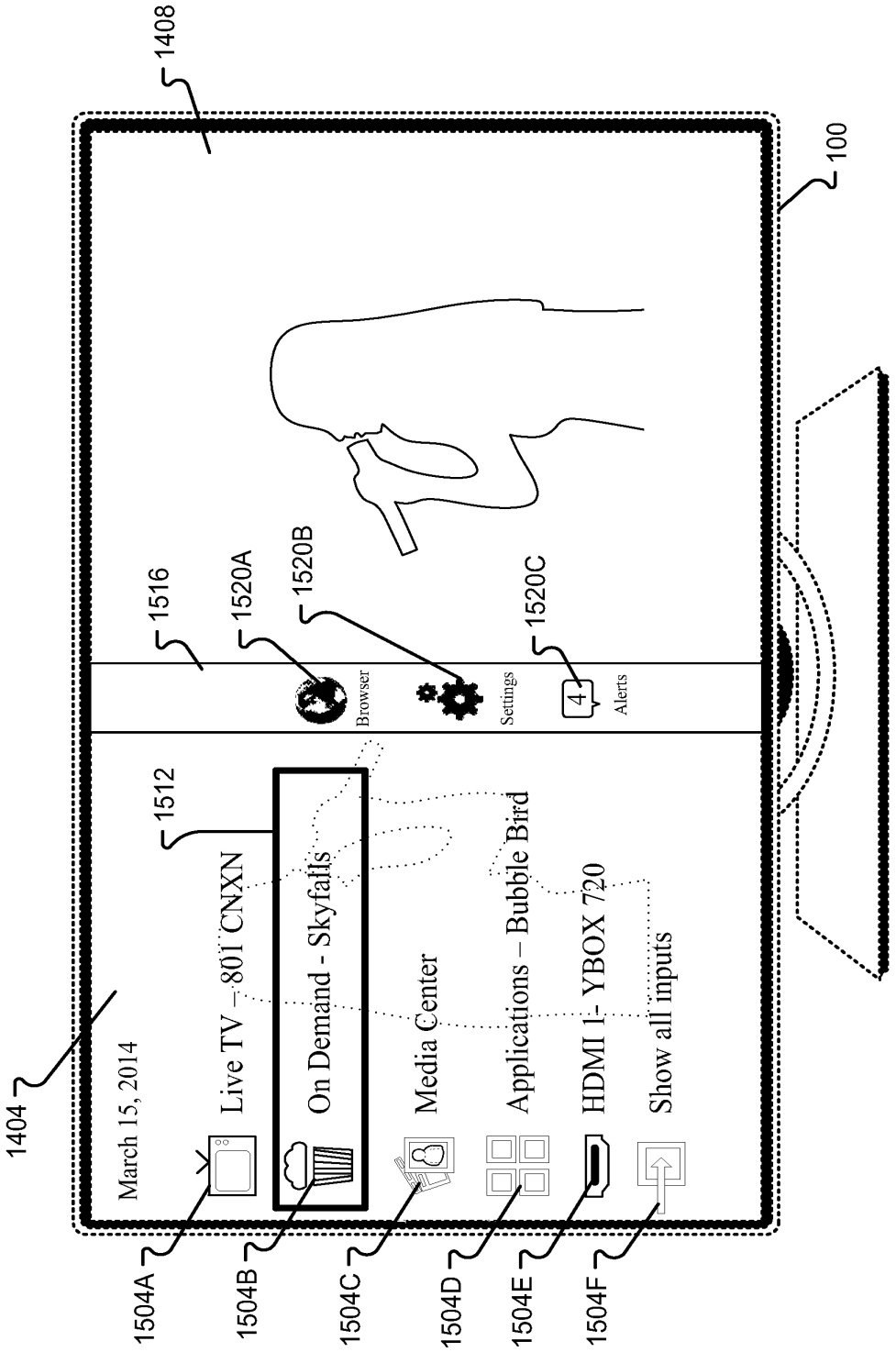
1408
100
1404
March 15, 2014
Live TV – 801 CNXN
On Demand - Skyfalls
Media Center
Applications – Bubble Bird
HDMI 1- YBOX 720
Show all inputs
1512
1516
1520A
1520B
1520C
Browser
Settings
4
Alerts
1504A
1504B
1504C
1504D
1504E
1504F

Fig. 15

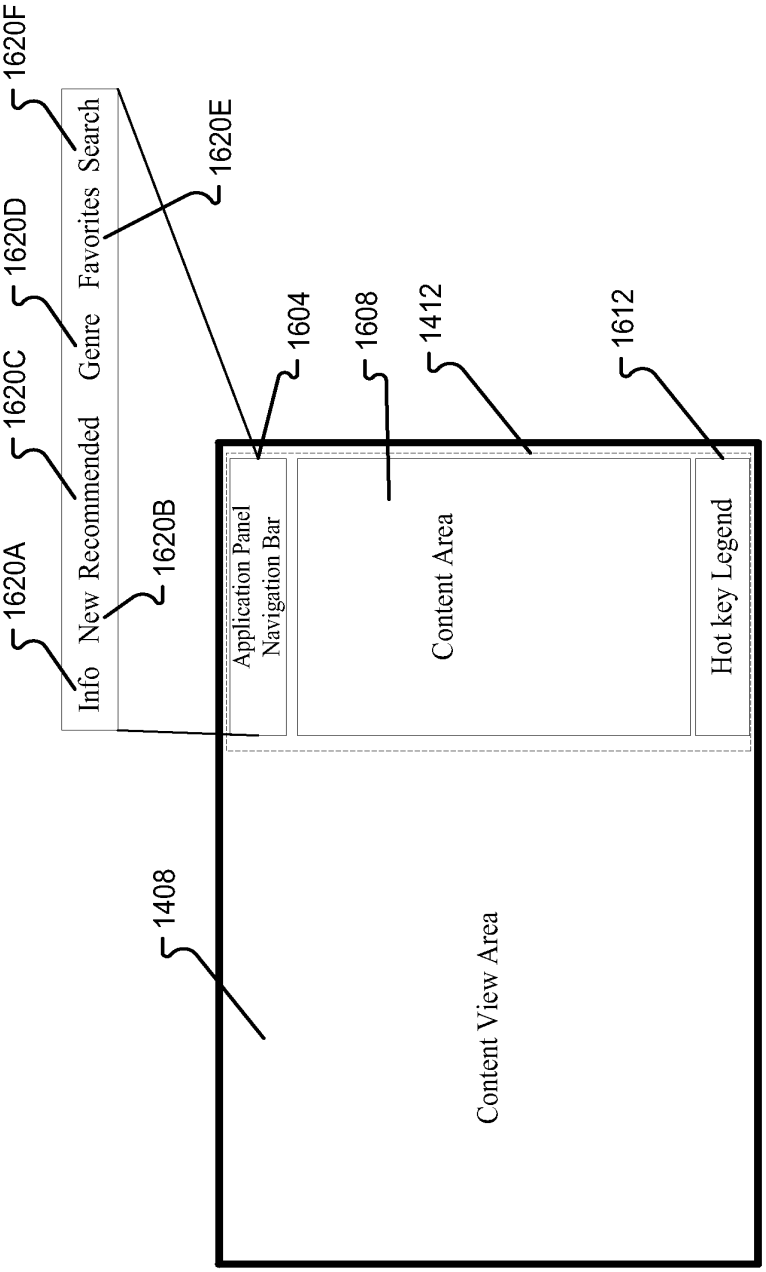
1620F
1620E
1620D
1620C
1620B
1620A
Search
Favorites
Genre
Recommended
New
Info
1604
1608
1412
1612
Application Panel
Navigation Bar
Content Area
Hot key Legend
1408
Content View Area

Fig. 16A

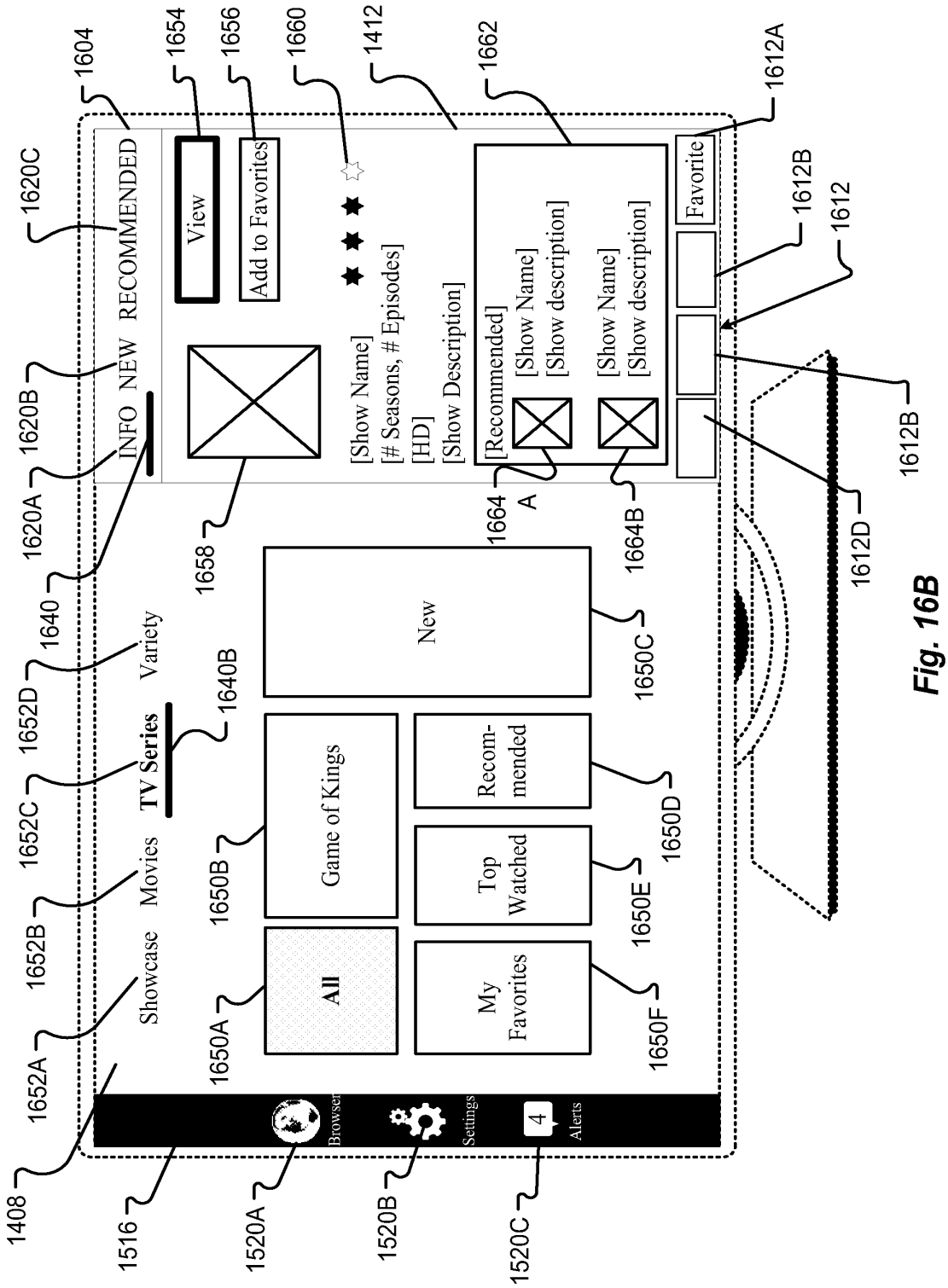
1604
1654
1656
1660
1412
1662
1612A
1620C
RECOMMENDED
View
Add to Favorites
[Show Name]
[# Seasons, # Episodes]
[HD]
[Show Description]
[Recommended]
[Show Name]
[Show description]
[Show Name]
[Show description]
Favorite
1612B
1612
1620B
NEW
INFO
1620A
1640
1658
1664A
1664B
1612B
1612D
Variety
1652D
1640B
New
1650C
TV Series
1652C
Movies
1652B
Showcase
1652A
Game of Kings
1650B
Recom-
mended
1650D
Top
Watched
1650E
All
1650A
My
Favorites
1650F
Browser
Settings
4
Alerts
1408
1516
1520A
1520B
1520C

Fig. 16B

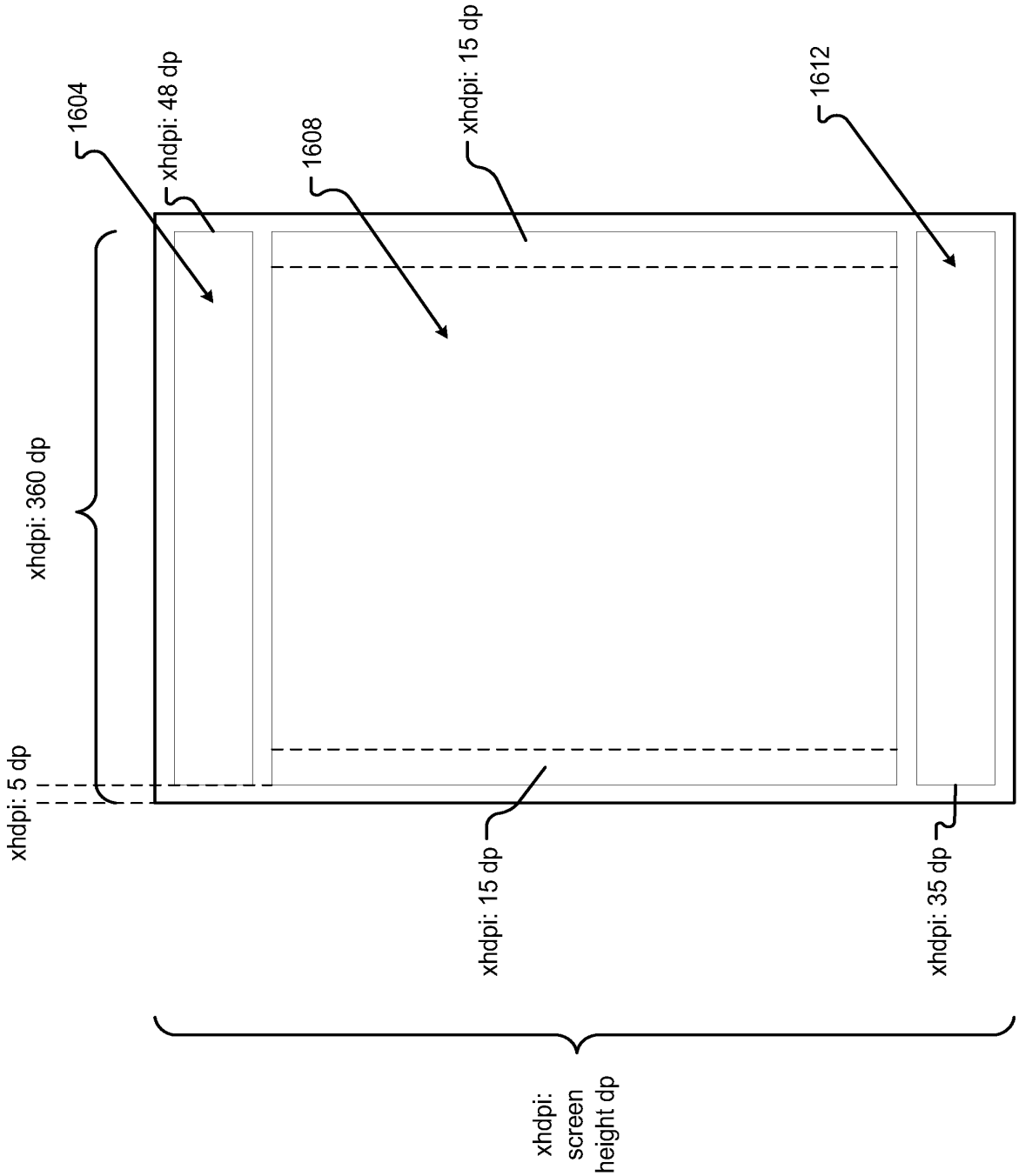
1604
xhdpi: 48 dp
1608
xhdpi: 15 dp
1612
xhdpi: 360 dp
xhdpi: 5 dp
xhdpi: 15 dp
xhdpi: 35 dp
xhdpi:
screen
height dp

Fig. 16C

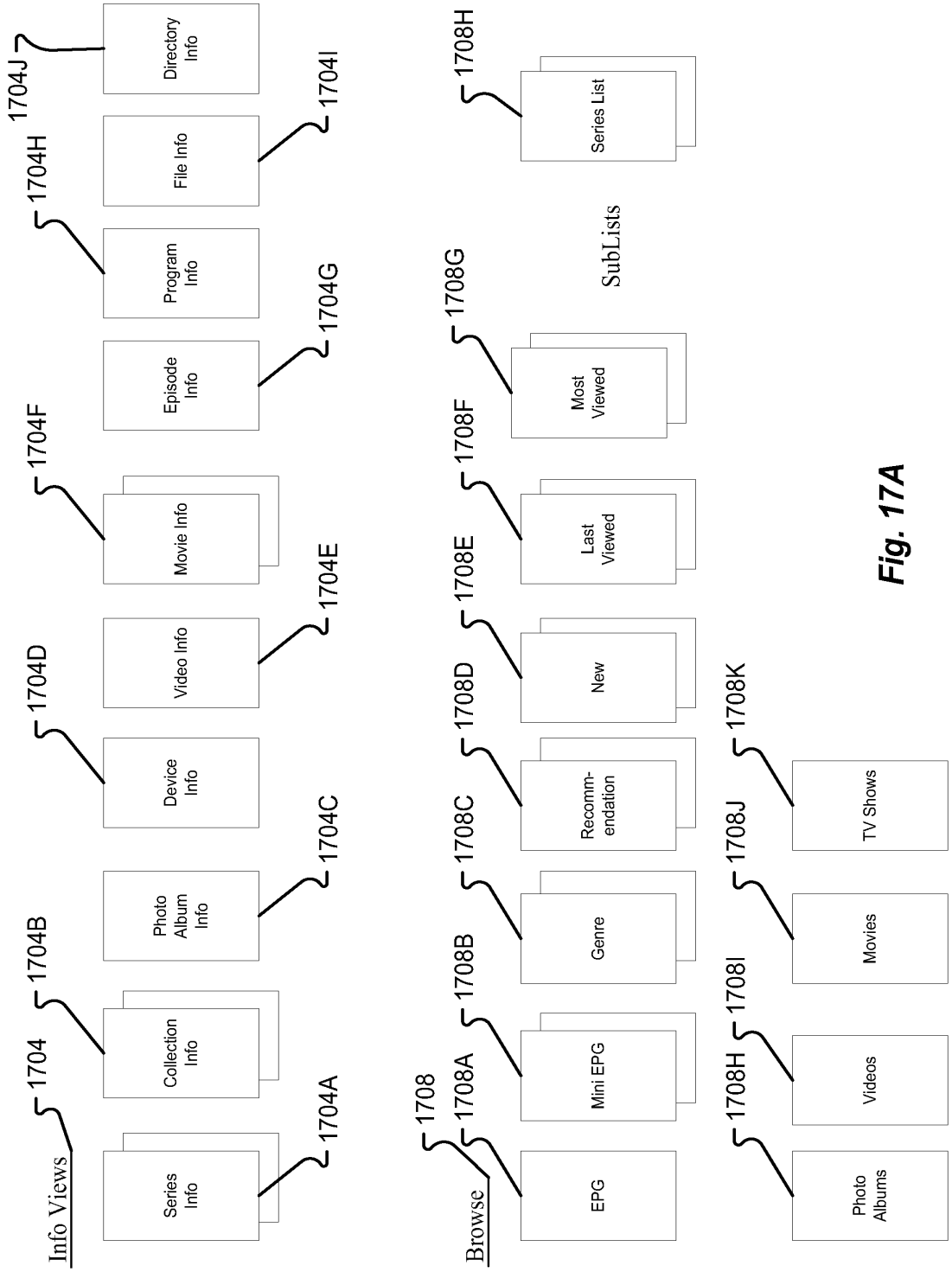
Info Views
1704
1704A
Series Info
1704B
Collection Info
1704C
Photo Album Info
1704D
Device Info
1704E
Video Info
1704F
Movie Info
1704G
Episode Info
1704H
Program Info
1704I
File Info
1704J
Directory Info
Browse
1708
1708A
EPG
1708B
Mini EPG
1708C
Genre
1708D
Recomm-endation
1708E
New
1708F
Last Viewed
1708G
Most Viewed
SubLists
1708H
Series List
1708H
Photo Albums
1708I
Videos
1708J
Movies
1708K
TV Shows

Fig. 17A

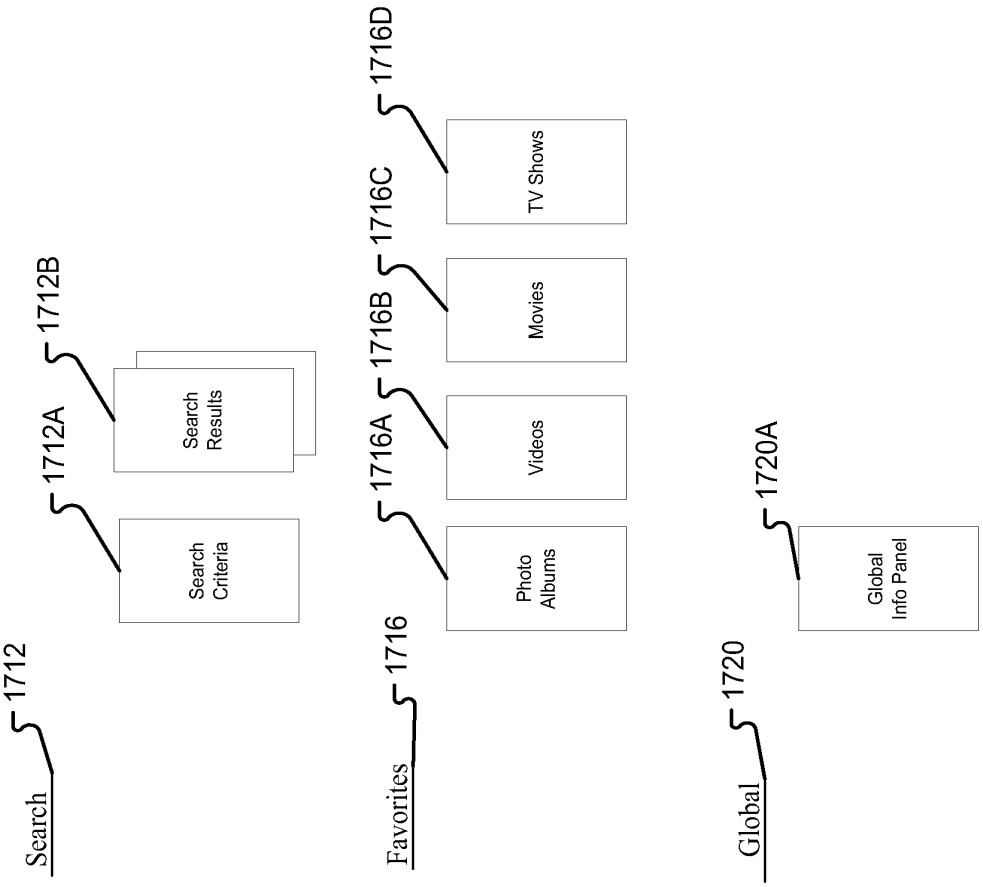
Search
1712
1712A
Search Criteria
1712B
Search Results
Favorites
1716
1716A
Photo Albums
1716B
Videos
1716C
Movies
1716D
TV Shows
Global
1720
1720A
Global Info Panel

Fig. 17B

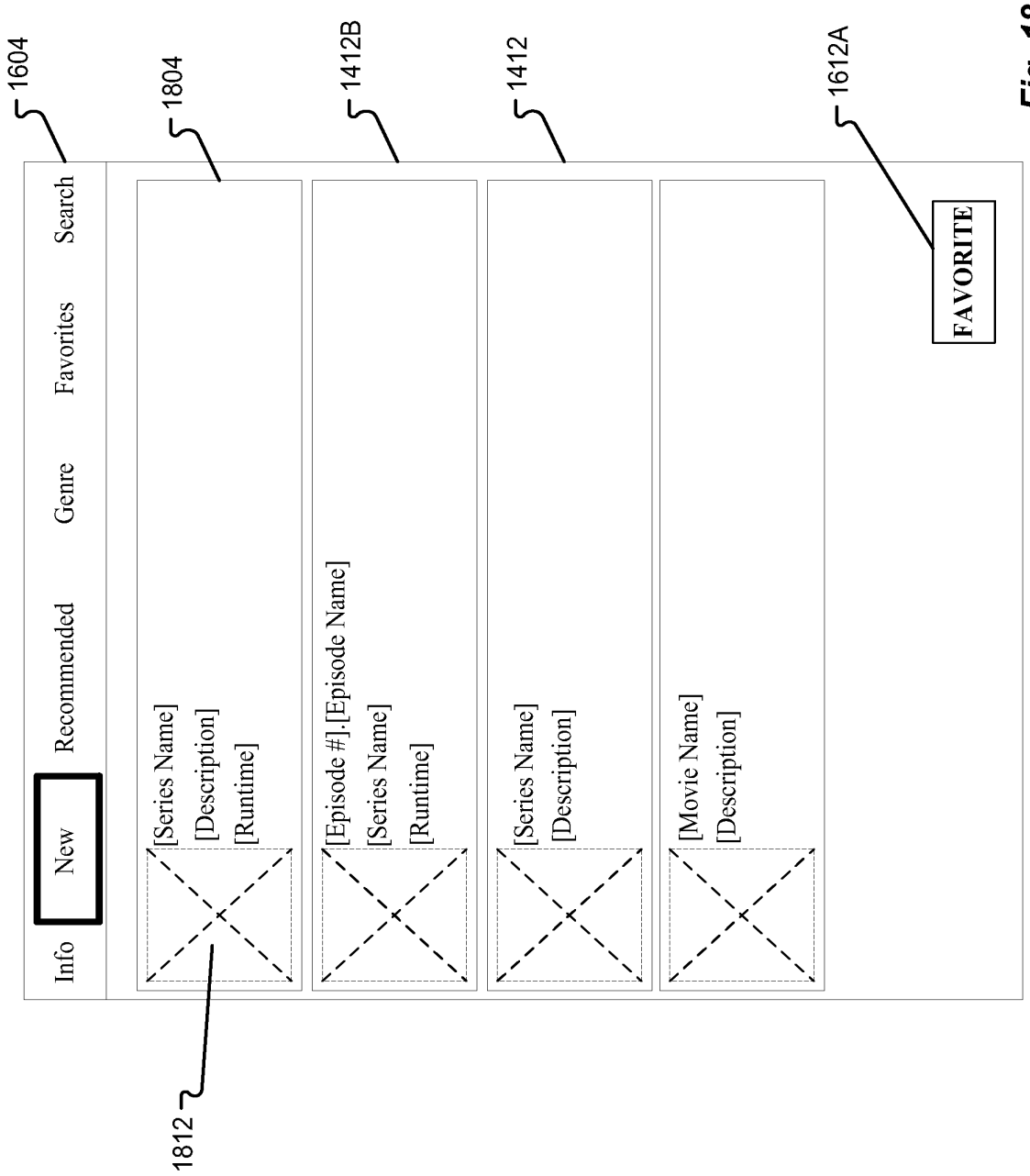
1604
1804
1412B
1412
1612A
Info
New
Recommended
Genre
Favorites
Search
[Series Name]
[Description]
[Runtime]
[Episode #].[Episode Name]
[Series Name]
[Runtime]
[Series Name]
[Description]
[Movie Name]
[Description]
FAVORITE
1812

Fig. 18

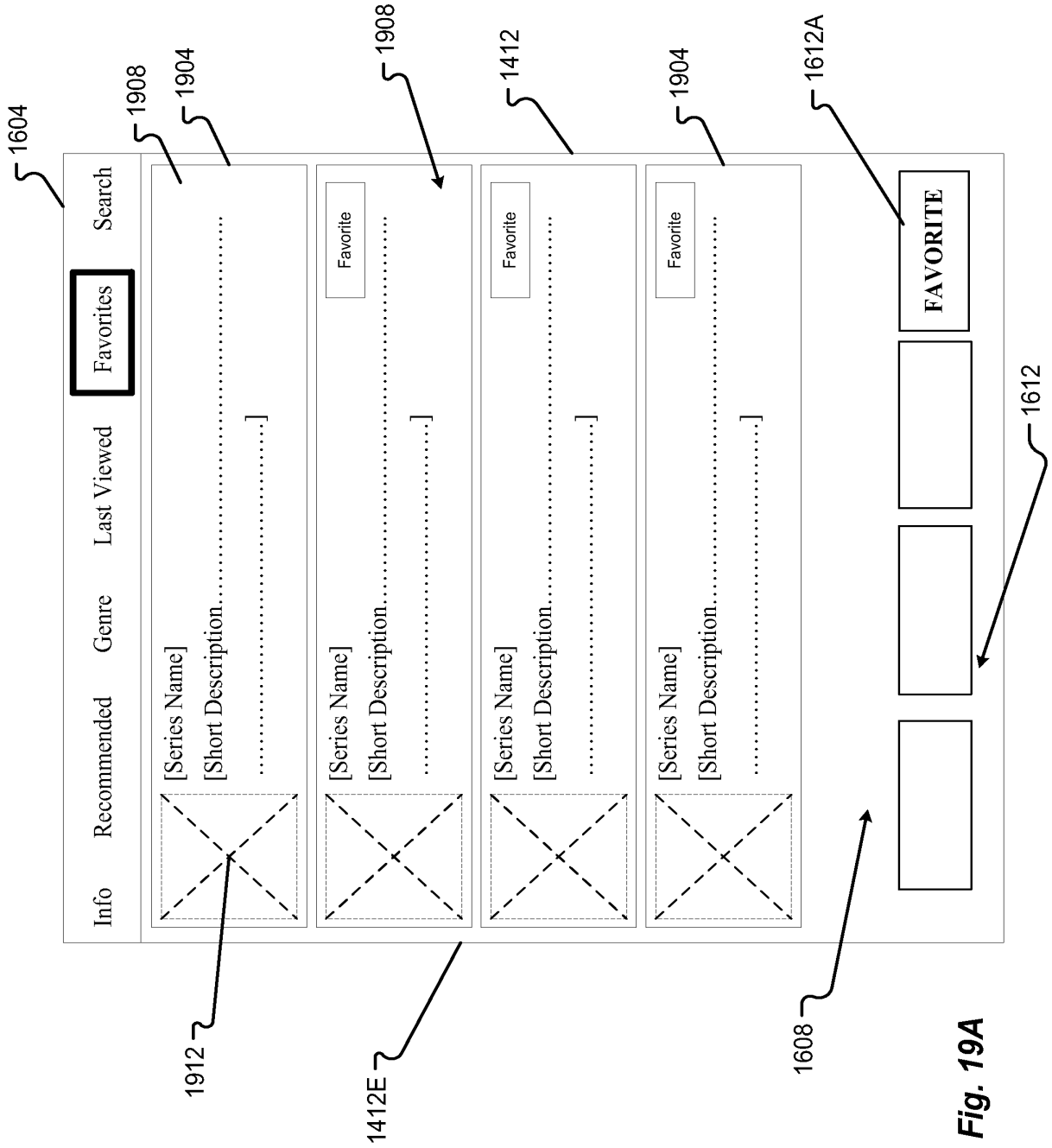
1604
Info
Recommended
Genre
Last Viewed
Favorites
Search
1908
1904
[Series Name]
[Short Description.....]
1908
Favorite
[Series Name]
[Short Description.....]
1412
Favorite
[Series Name]
[Short Description.....]
1904
Favorite
[Series Name]
[Short Description.....]
1612A
FAVORITE
1612
1912
1412E
1608

Fig. 19A

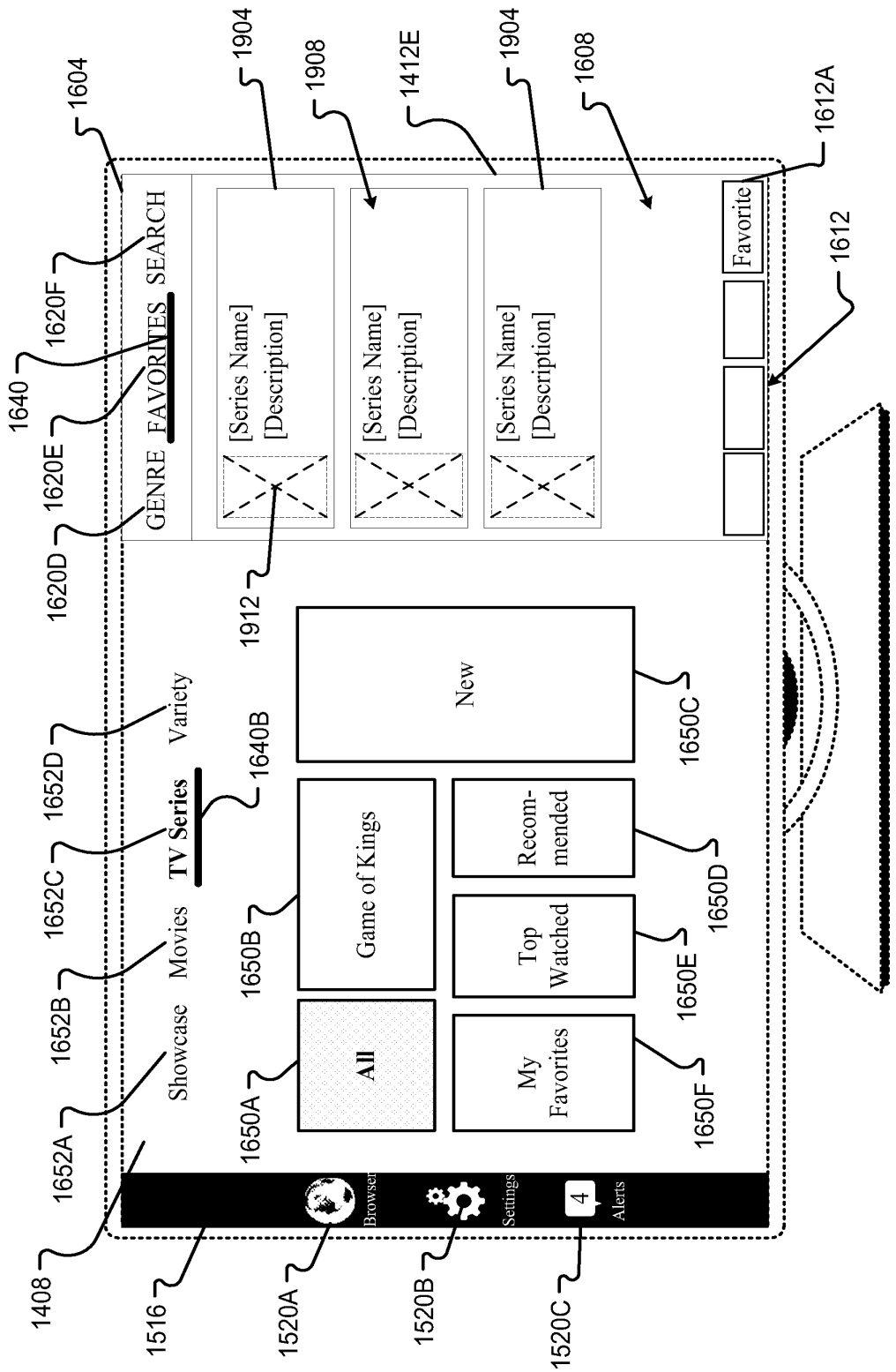
1604
1904
1908
1412E
1904
1608
1612A
1620F
SEARCH
1640
FAVORITES
1620E
GENRE
1620D
[Series Name]
[Description]
[Series Name]
[Description]
[Series Name]
[Description]
Favorite
1612
1912
1652D
Variety
1640B
New
1650C
1652C
TV Series
Game of Kings
Recom-
mended
1650D
1650B
1652B
Movies
Top
Watched
1650E
1652A
Showcase
All
My
Favorites
1650A
1650F
Browser
Settings
4
Alerts
1408
1516
1520A
1520B
1520C

Fig. 19B

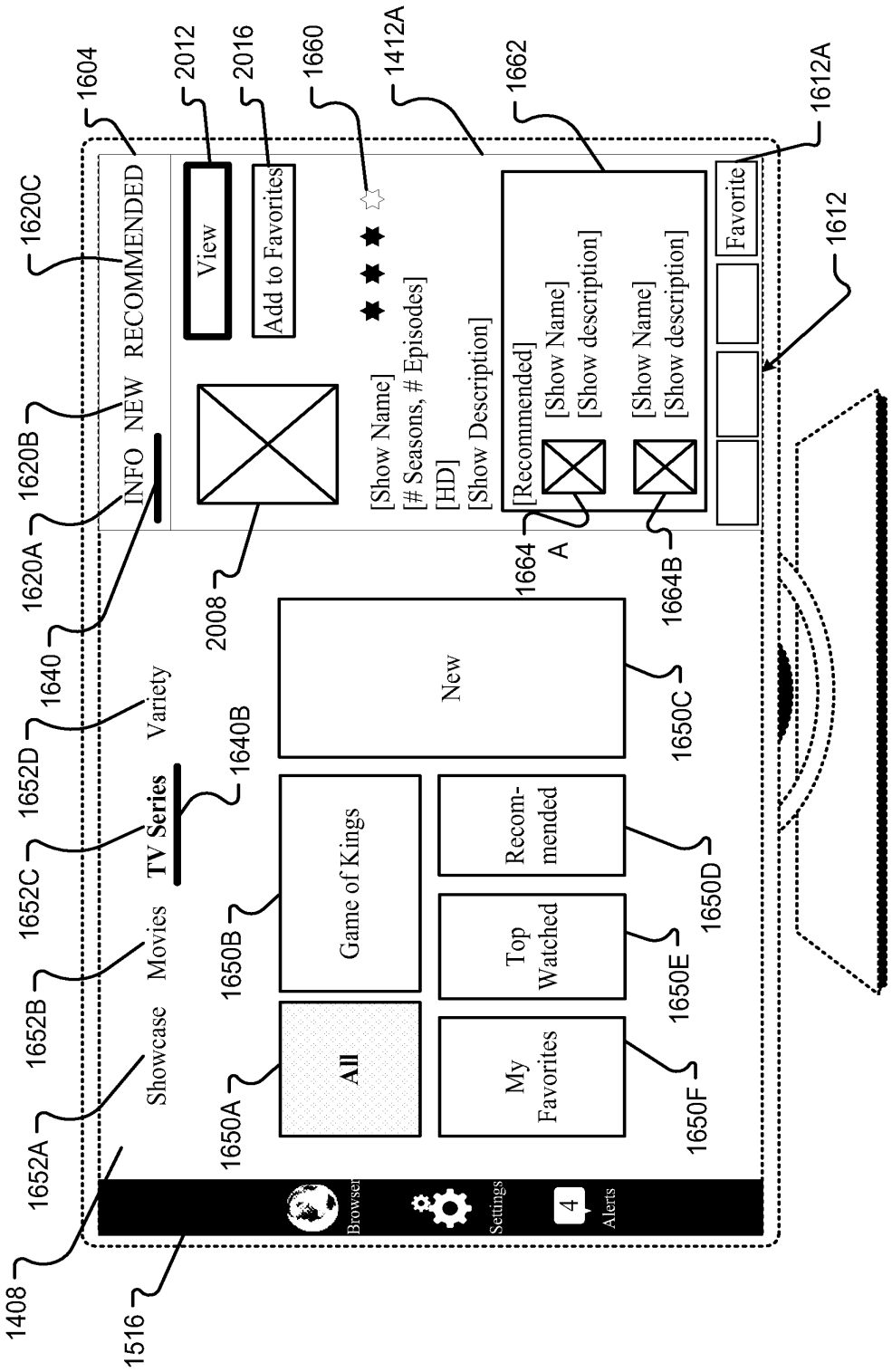
1604
2012
2016
1660
1412A
1662
1612A
1620C
View
Add to Favorites
Favorite
1612
RECOMMENDED
1620B
NEW
INFO
1620A
[Show Name]
[# Seasons, # Episodes]
[HD]
[Show Description]
[Recommended]
[Show Name]
[Show description]
[Show Name]
[Show description]
1664 A
1664B
2008
1640
New
1650C
Variety
1652D
1640B
TV Series
1652C
Movies
1652B
Showcase
1652A
Game of Kings
1650B
Recom-
mended
1650D
Top
Watched
1650E
All
1650A
My
Favorites
1650F
Browser
Settings
4
Alerts
1408
1516

Fig. 20A

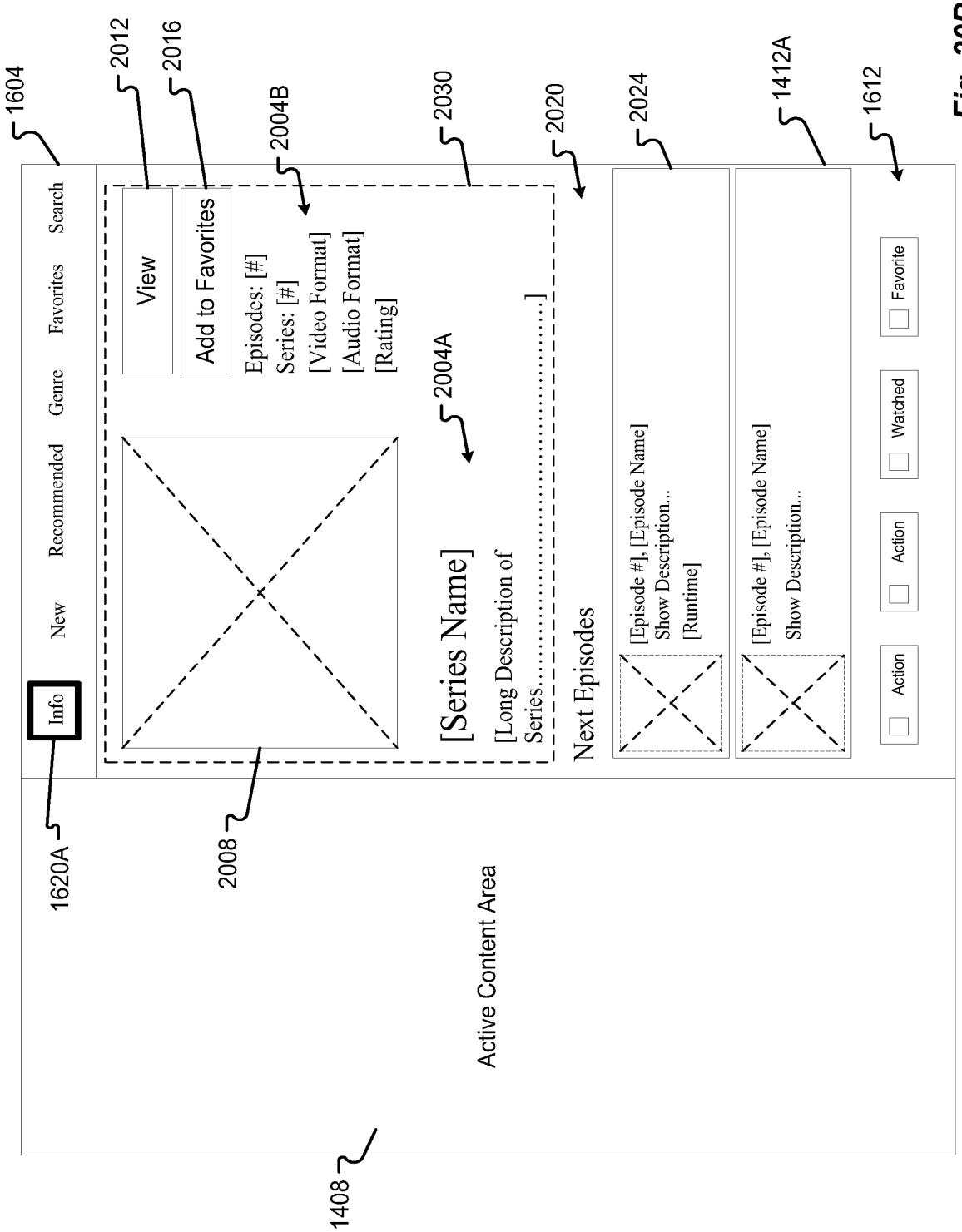
1604
Info
New
Recommended
Genre
Favorites
Search
1620A
2012
View
2016
Add to Favorites
2004B
Episodes: [#]
Series: [#]
[Video Format]
[Audio Format]
[Rating]
2008
2004A
[Series Name]
[Long Description of Series.....]
2030
2020
Next Episodes
2024
[Episode #], [Episode Name]
Show Description...
[Runtime]
1412A
[Episode #], [Episode Name]
Show Description...
1612
Action
Action
Watched
Favorite
Active Content Area
1408

Fig. 20B

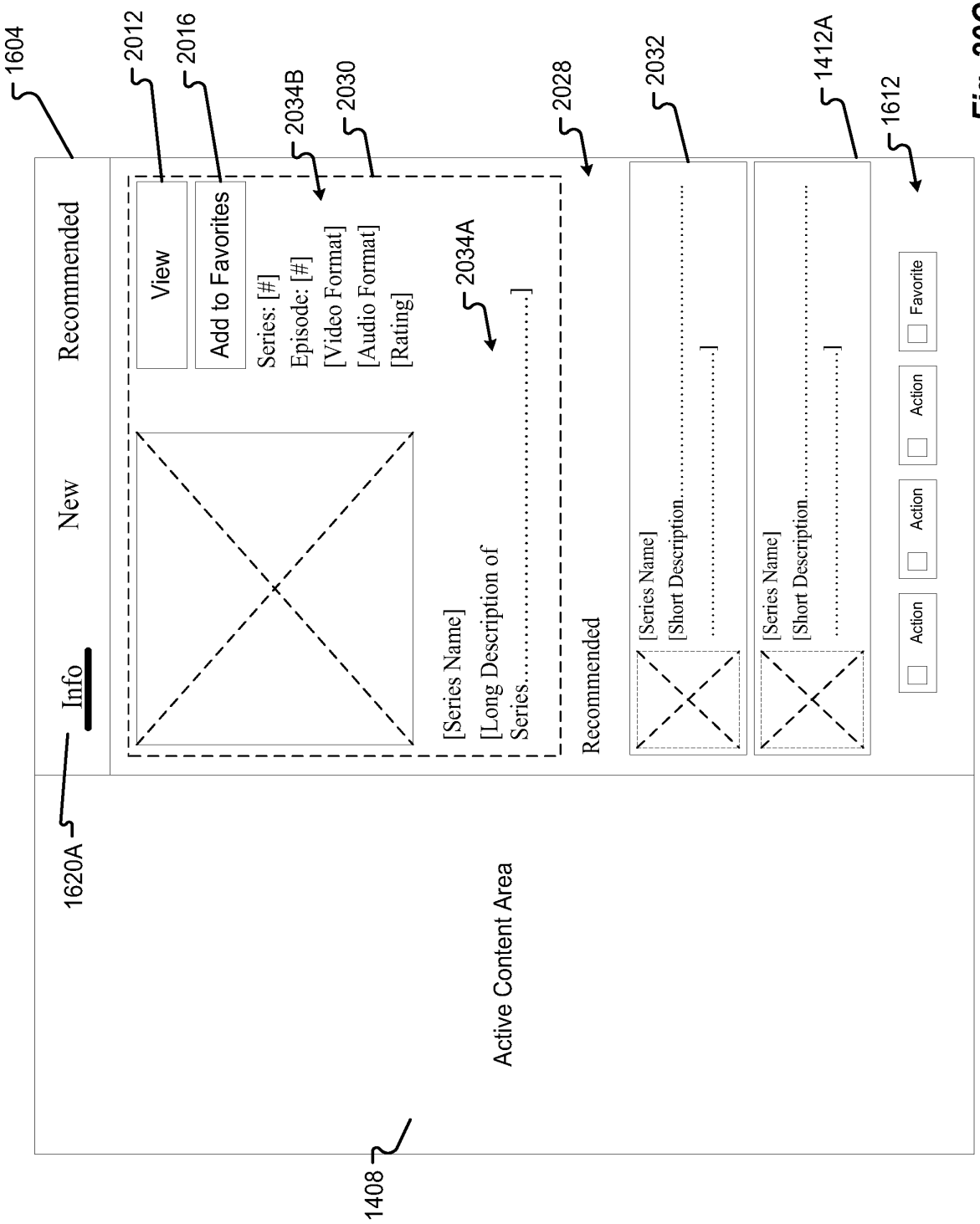
1604
Info
New
Recommended
1620A
View
Add to Favorites
2012
2016
Series: [#]
Episode: [#]
[Video Format]
[Audio Format]
[Rating]
2034B
2030
2034A
[Series Name]
[Long Description of Series.....]
Recommended
2028
[Series Name]
[Short Description.....]
2032
[Series Name]
[Short Description.....]
1412A
Action
Action
Action
Favorite
1612
Active Content Area
1408

Fig. 20C

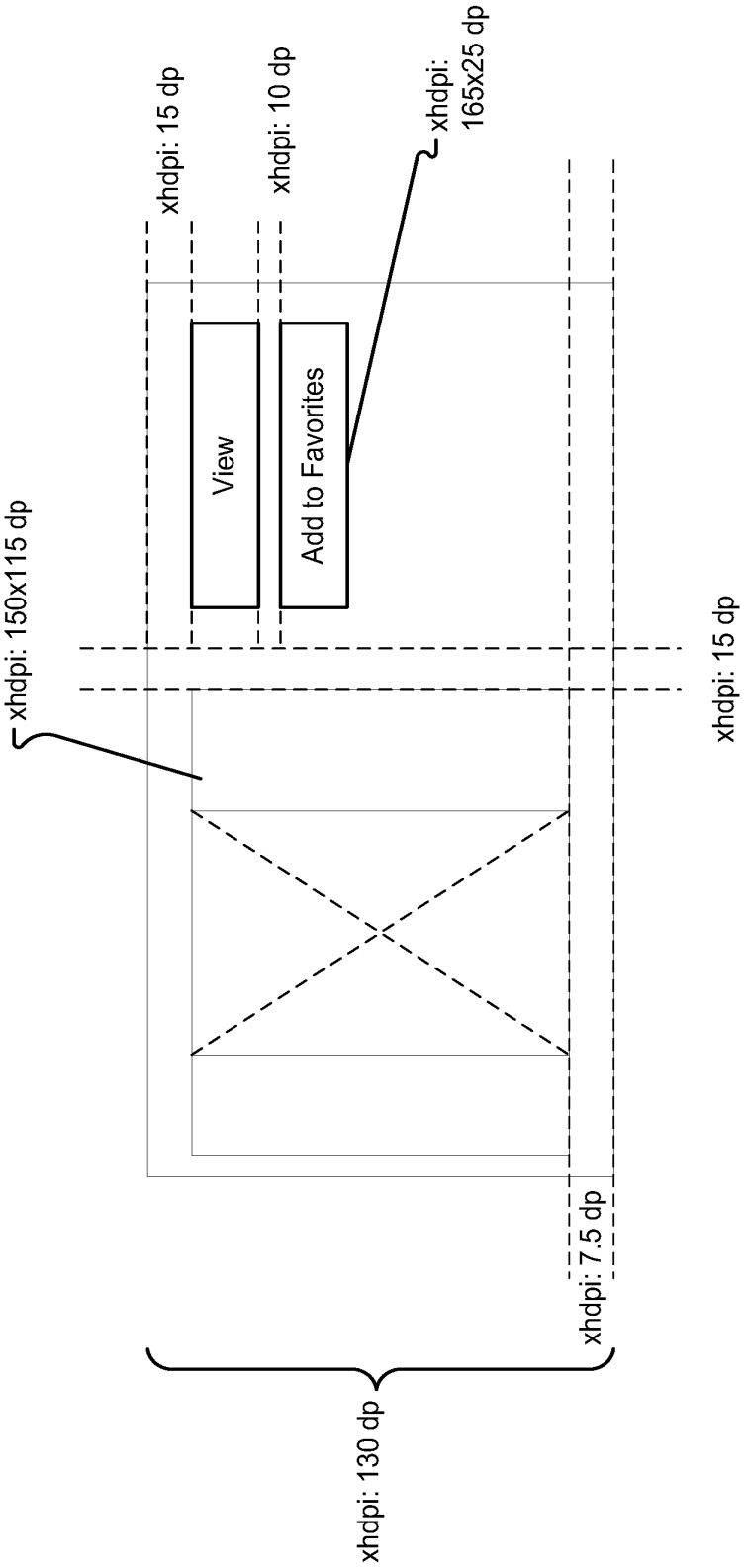
xhdpi: 150x115 dp
xhdpi: 15 dp
xhdpi: 10 dp
xhdpi: 165x25 dp
View
Add to Favorites
xhdpi: 15 dp
xhdpi: 7.5 dp
xhdpi: 130 dp

Fig. 20D

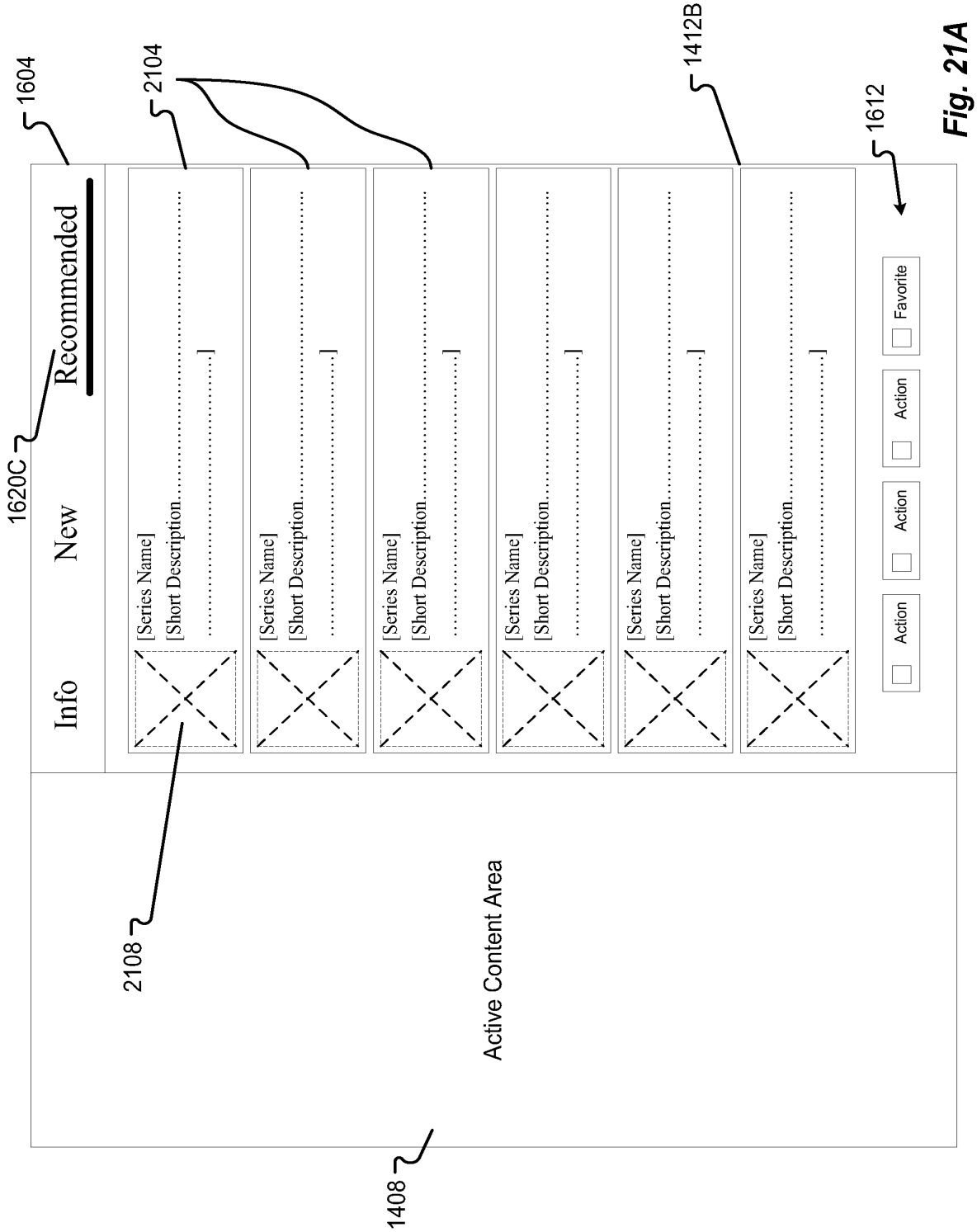
1604
1620C
Info
New
Recommended
2104
[Series Name]
[Short Description.....]
2108
1412B
1612
Action
Action
Action
Favorite
Active Content Area
1408

Fig. 21A

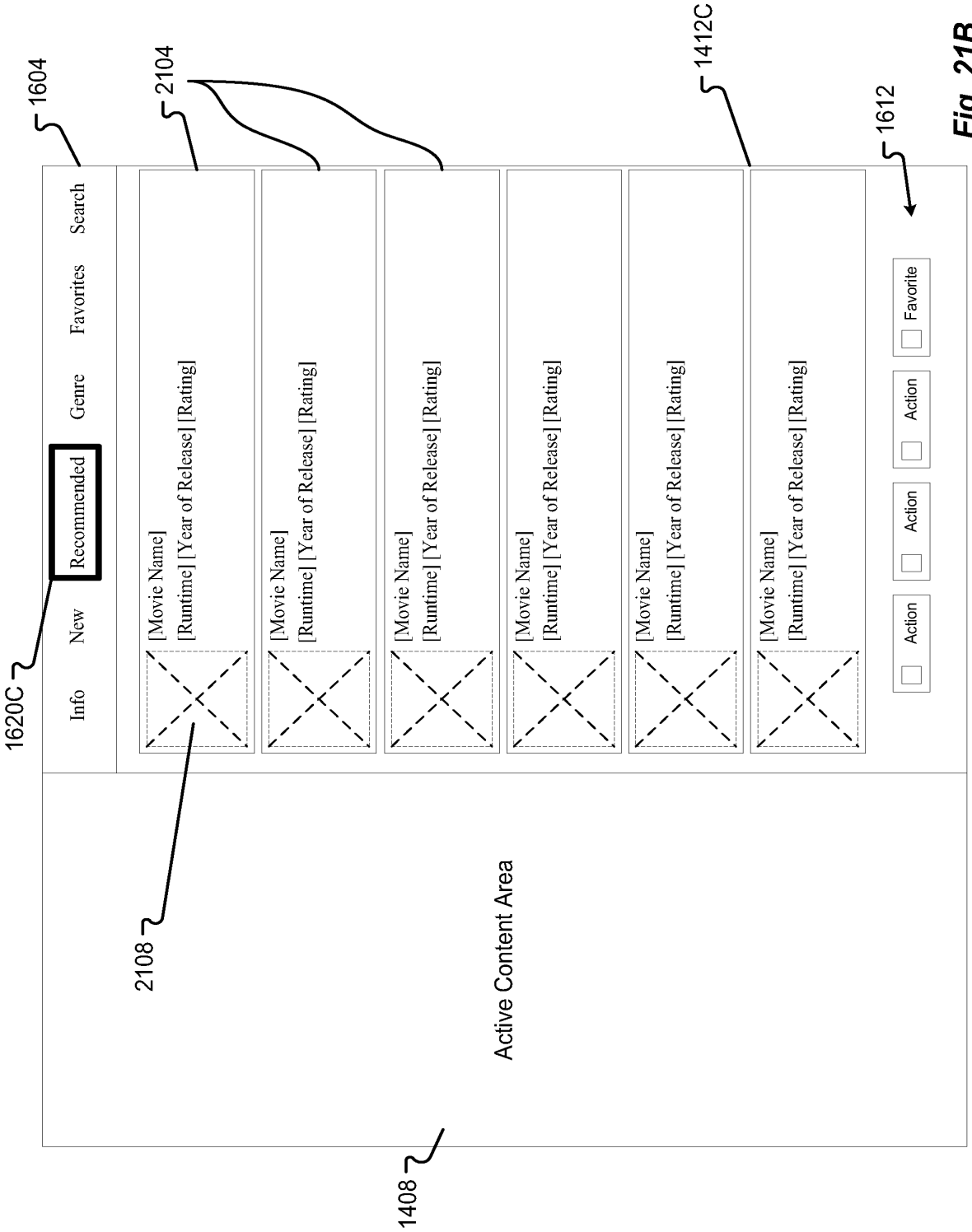
1604
2104
1412C
1612
Search
Favorites
Genre
Recommended
New
Info
1620C
[Movie Name]
[Runtime] [Year of Release] [Rating]
Favorite
Action
Action
Action
2108
Active Content Area
1408

Fig. 21B

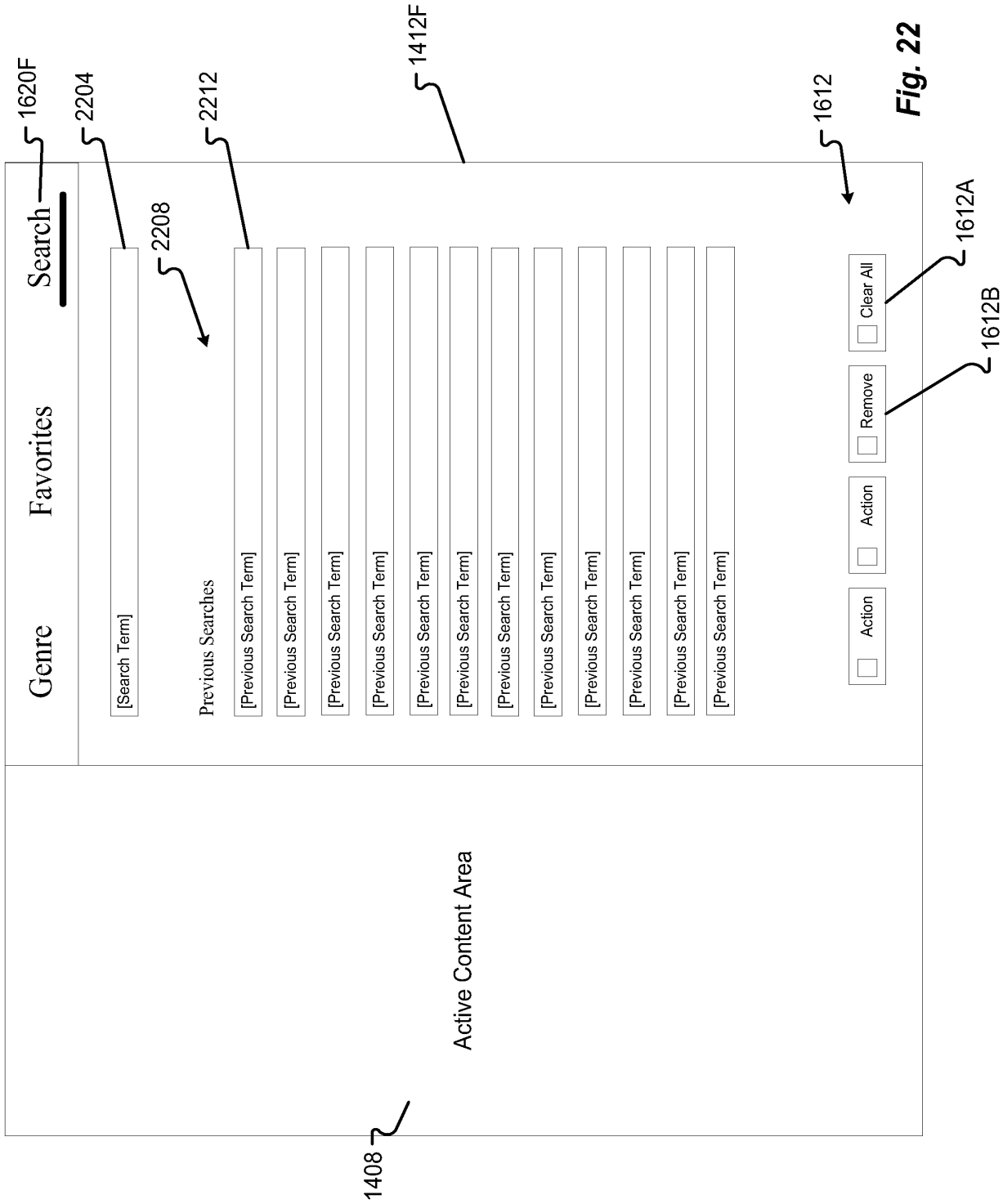
1620F
Genre
Favorites
Search
2204
[Search Term]
2208
Previous Searches
2212
[Previous Search Term]
[Previous Search Term]
[Previous Search Term]
[Previous Search Term]
[Previous Search Term]
[Previous Search Term]
[Previous Search Term]
[Previous Search Term]
[Previous Search Term]
[Previous Search Term]
[Previous Search Term]
[Previous Search Term]
1412F
1612
Action
Action
Remove
Clear All
1612A
1612B
Active Content Area
1408

Fig. 22

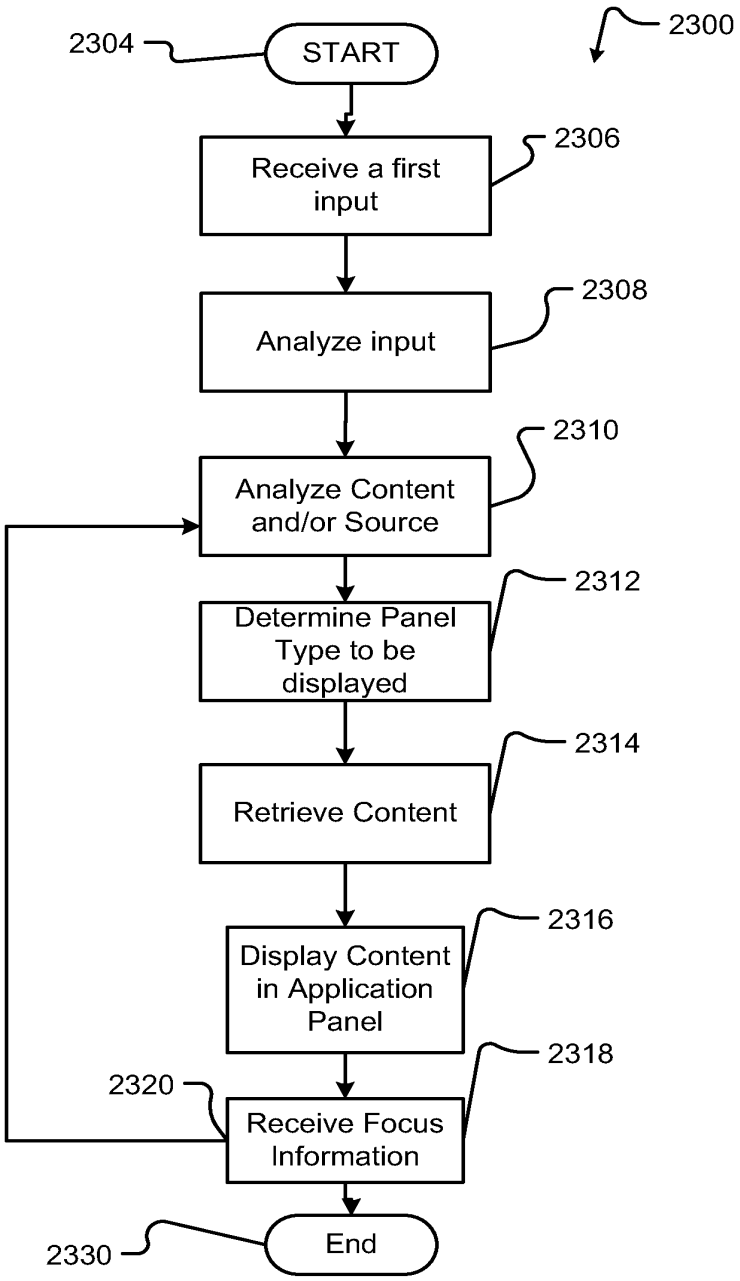
2300
2304
START
2306
Receive a first input
2308
Analyze input
2310
Analyze Content and/or Source
2312
Determine Panel Type to be displayed
2314
Retrieve Content
2316
Display Content in Application Panel
2318
2320
Receive Focus Information
2330
End

Fig. 23

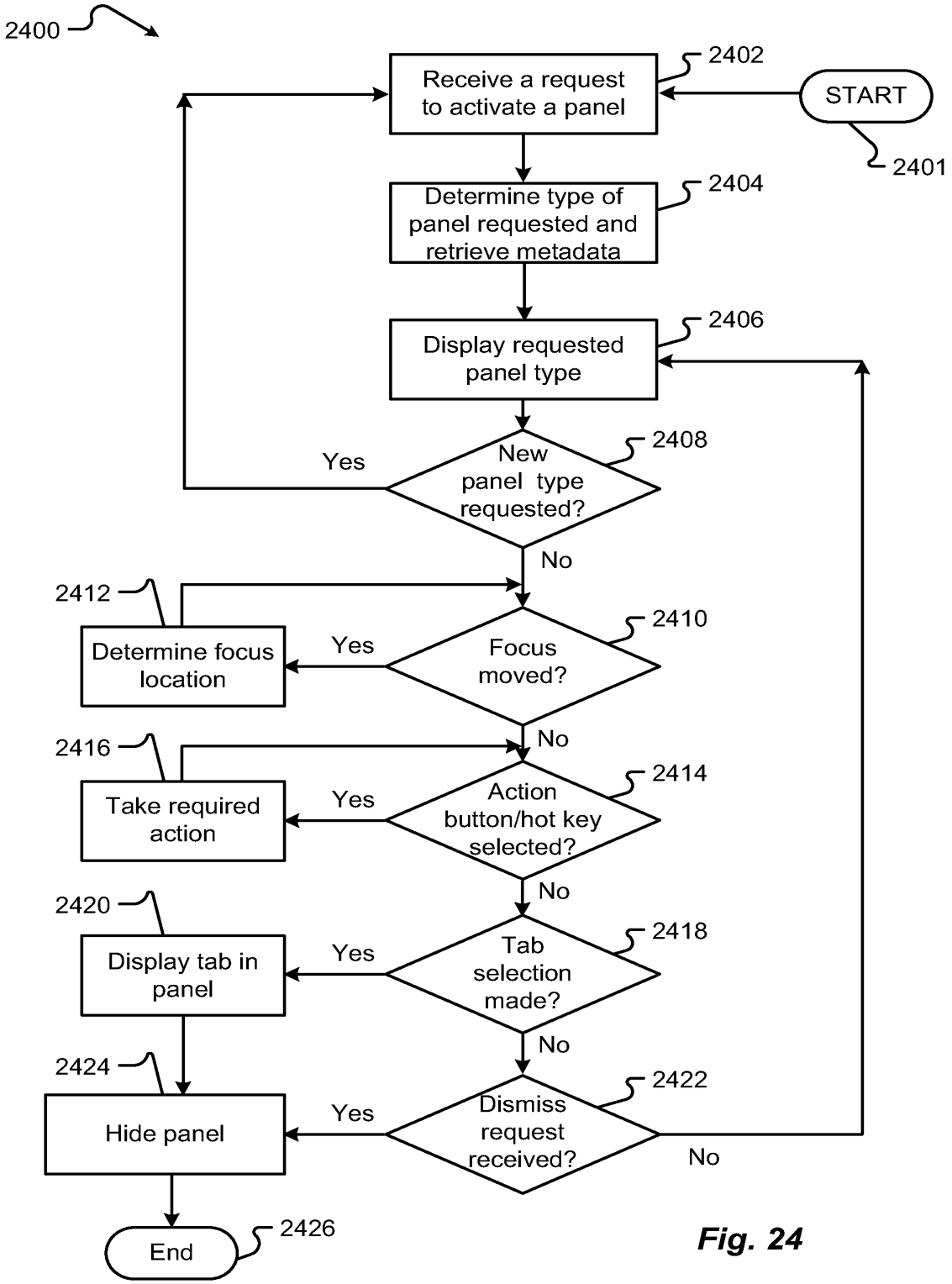
2400
Receive a request to activate a panel
2402
START
2401
Determine type of panel requested and retrieve metadata
2404
Display requested panel type
2406
New panel type requested?
2408
Yes
No
2412
Determine focus location
Yes
Focus moved?
2410
No
2416
Take required action
Yes
Action button/hot key selected?
2414
No
2420
Display tab in panel
Yes
Tab selection made?
2418
No
2424
Hide panel
Yes
Dismiss request received?
2422
No
End
2426

Fig. 24

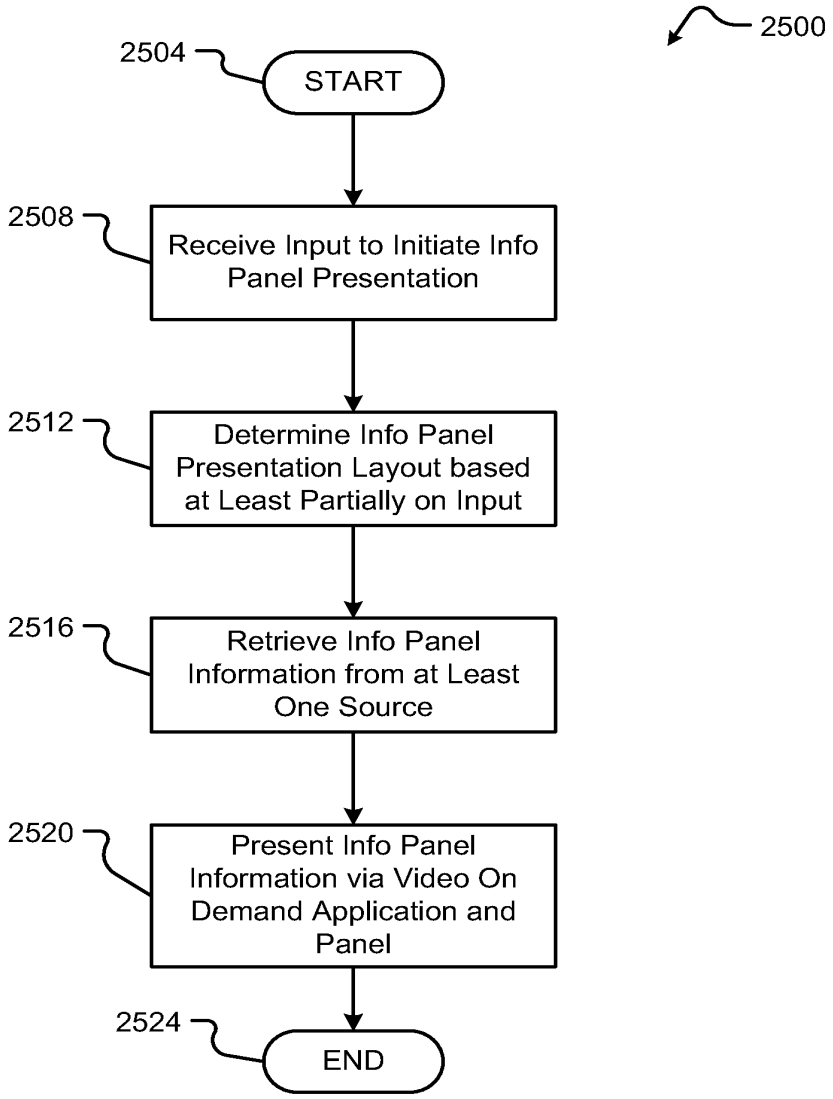
2500
2504
START
2508
Receive Input to Initiate Info Panel Presentation
2512
Determine Info Panel Presentation Layout based at Least Partially on Input
2516
Retrieve Info Panel Information from at Least One Source
2520
Present Info Panel Information via Video On Demand Application and Panel
2524
END

Fig. 25

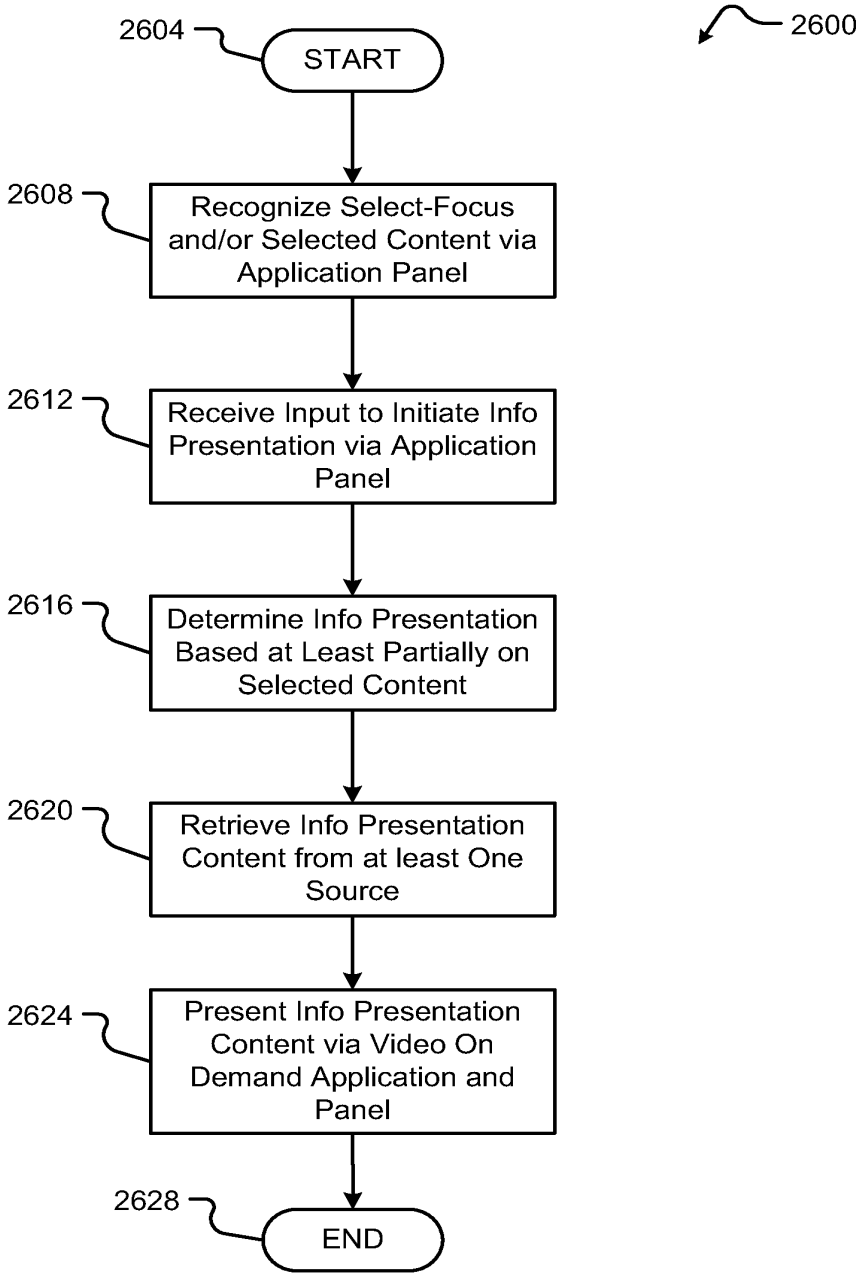
2600
2604
START
2608
Recognize Select-Focus and/or Selected Content via Application Panel
2612
Receive Input to Initiate Info Presentation via Application Panel
2616
Determine Info Presentation Based at Least Partially on Selected Content
2620
Retrieve Info Presentation Content from at least One Source
2624
Present Info Presentation Content via Video On Demand Application and Panel
2628
END

Fig. 26

Electronic Patent Application Fee Transmittal

Application Number:	
Filing Date:	
Title of Invention:	PANEL USER INTERFACE FOR AN INTELLIGENT TELEVISION
First Named Inventor/Applicant Name:	Sanjiv Sirpal
Filer:	Kendria Elizabeth Pearson/Nicole Bell
Attorney Docket Number:	6583-488

Filed as Large Entity

Utility under 35 USC 111(a) Filing Fees

Description	Fee Code	Quantity	Amount	Sub-Total in USD($)
Basic Filing:				
Utility application filing	1011	1	280	280
Utility Search Fee	1111	1	600	600
Utility Examination Fee	1311	1	720	720
Pages:				
Claims:				
Miscellaneous-Filing:				
Late Filing Fee for Oath or Declaration	1051	1	140	140
Petition:				

Description	Fee Code	Quantity	Amount	Sub-Total in USD($)
Patent-Appeals-and-Interference:				
Post-Allowance-and-Post-Issuance:				
Extension-of-Time:				
Miscellaneous:				
			Total in USD ($)	**1740**

Electronic Acknowledgement Receipt

EFS ID:	16610631
Application Number:	13968665
International Application Number:	
Confirmation Number:	7370
Title of Invention:	PANEL USER INTERFACE FOR AN INTELLIGENT TELEVISION
First Named Inventor/Applicant Name:	Sanjiv Sirpal
Customer Number:	111285
Filer:	Kendria Elizabeth Pearson/Nicole Bell
Filer Authorized By:	Kendria Elizabeth Pearson
Attorney Docket Number:	6583-488
Receipt Date:	16-AUG-2013
Filing Date:	
Time Stamp:	13:28:23
Application Type:	Utility under 35 USC 111(a)

Payment information:

Submitted with Payment	yes
Payment Type	Deposit Account
Payment was successfully received in RAM	$1740
RAM confirmation Number	10462
Deposit Account	191970
Authorized User	

The Director of the USPTO is hereby authorized to charge indicated fees and credit any overpayment as follows:

Charge any Additional Fees required under 37 C.F.R. Section 1.16 (National application filing, search, and examination fees)

Charge any Additional Fees required under 37 C.F.R. Section 1.17 (Patent application and reexamination processing fees)

Charge any Additional Fees required under 37 C.F.R. Section 1.19 (Document supply fees)

Charge any Additional Fees required under 37 C.F.R. Section 1.20 (Post Issuance fees)

Charge any Additional Fees required under 37 C.F.R. Section 1.21 (Miscellaneous fees and charges)

File Listing:

Document Number	Document Description	File Name	File Size(Bytes)/ Message Digest	Multi Part /.zip	Pages (if appl.)
1	Application Data Sheet	ADS.pdf	1504298 cb04503bbde61e6afd3bffa8c6bc9cac8390b7e6	no	9
Warnings:					
Information:					
2		Application_6583_488.pdf	327477 275d764cbefb4424f33412c201324b7023541460	yes	75

	Multipart Description/PDF files in .zip description		
	Document Description	**Start**	**End**
	Specification	1	68
	Claims	69	74
	Abstract	75	75

Warnings:					
Information:					
3	Drawings-only black and white line drawings	FINAL_FIGURES_USPTO.pdf	378719 6f81438f0b702cbc3b6ff970942f75f46d2797e5	no	40
Warnings:					
Information:					
4	Fee Worksheet (SB06)	fee-info.pdf	36633 f77f17629b45067545286f2ccb64b87701731c6a	no	2
Warnings:					
Information:					
		Total Files Size (in bytes):	2247127		

This Acknowledgement Receipt evidences receipt on the noted date by the USPTO of the indicated documents, characterized by the applicant, and including page counts, where applicable. It serves as evidence of receipt similar to a Post Card, as described in MPEP 503.

New Applications Under 35 U.S.C. 111
If a new application is being filed and the application includes the necessary components for a filing date (see 37 CFR 1.53(b)-(d) and MPEP 506), a Filing Receipt (37 CFR 1.54) will be issued in due course and the date shown on this Acknowledgement Receipt will establish the filing date of the application.

National Stage of an International Application under 35 U.S.C. 371
If a timely submission to enter the national stage of an international application is compliant with the conditions of 35 U.S.C. 371 and other applicable requirements a Form PCT/DO/EO/903 indicating acceptance of the application as a national stage submission under 35 U.S.C. 371 will be issued in addition to the Filing Receipt, in due course.

New International Application Filed with the USPTO as a Receiving Office
If a new international application is being filed and the international application includes the necessary components for an international filing date (see PCT Article 11 and MPEP 1810), a Notification of the International Application Number and of the International Filing Date (Form PCT/RO/105) will be issued in due course, subject to prescriptions concerning national security, and the date shown on this Acknowledgement Receipt will establish the international filing date of the application.