US 20130057764A1

(19) United States

(12) Patent Application Publication

(10) Pub. No.: US 2013/0057764 A1

(43) Pub. Date: Mar. 7, 2013

Choi et al.

(54) METHOD OF PROVIDING EXTERNAL DEVICE LIST AND IMAGE DISPLAY DEVICE

(76) Inventors: **Jinyoung Choi**, Seoul (KR); **Gowoon Choi**, Seoul (KR)

(21) Appl. No.: **13/535,735**

(22) Filed: **Jun. 28, 2012**

(30) **Foreign Application Priority Data**

Sep. 2, 2011 (KR) 10-2011-0088863

Publication Classification

(51) **Int. Cl.**
H04N 5/445 (2011.01)

(52) **U.S. Cl.** **348/563**; 348/E05.099

(57) **ABSTRACT**

Provided are a method of providing an external device list and an image display device. The method includes: displaying a plurality of external device icons connectible to the image display device; positioning a pointer on a first external device icon among the plurality of external device icons; and displaying on a screen of the image display device an image signal of an external device corresponding to the first external device icon having the pointer thereon.

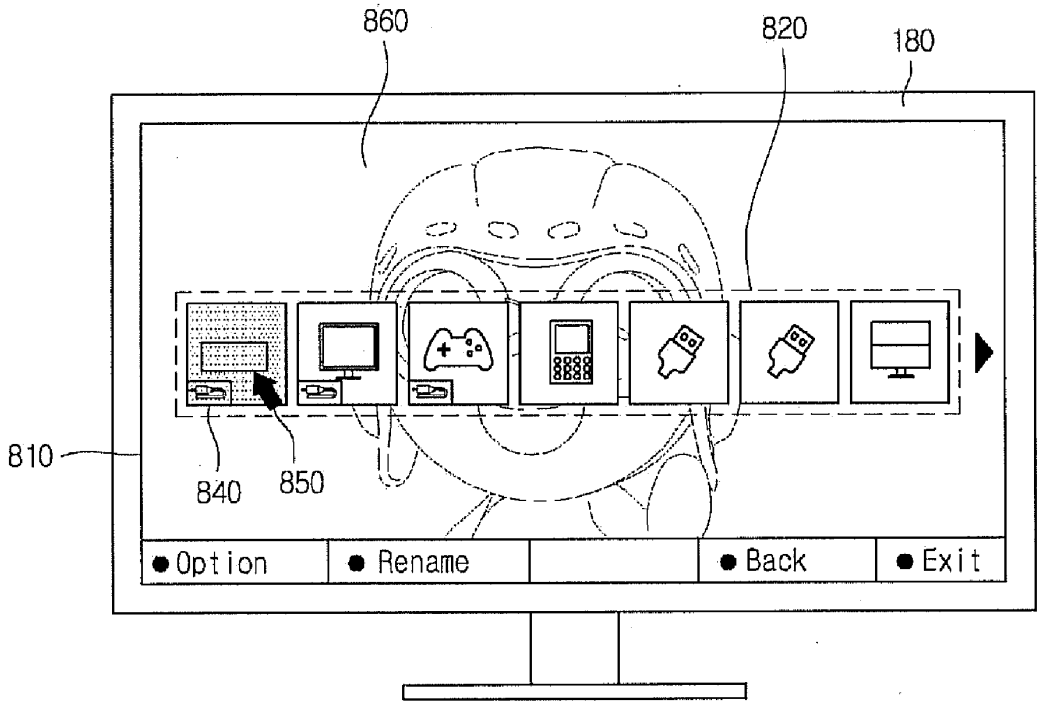

FIG.1

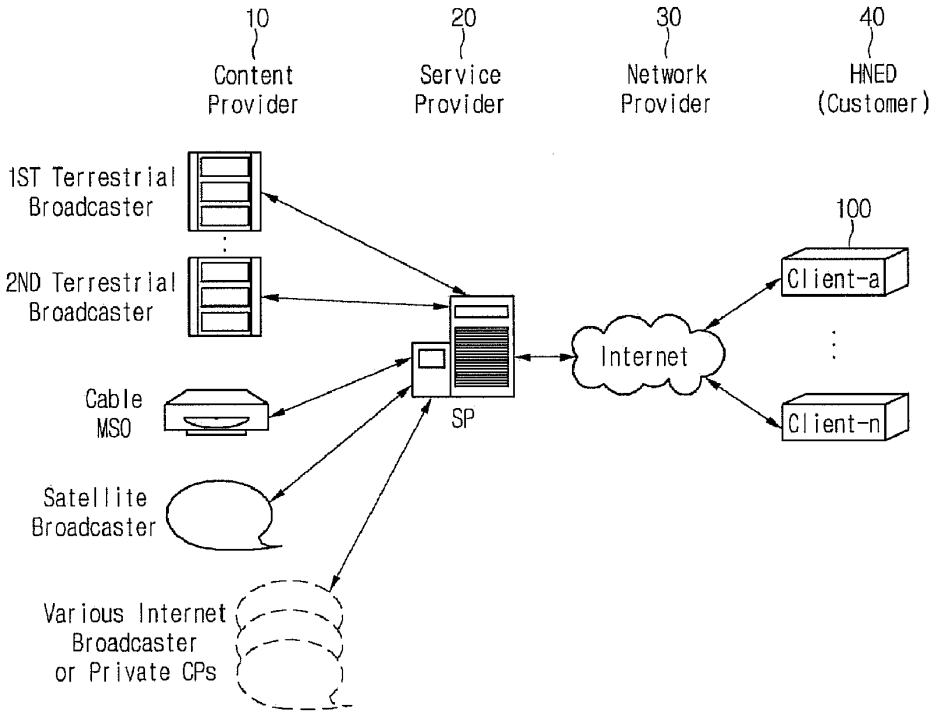
10
Content Provider
20
Service Provider
30
Network Provider
40
HNED (Customer)
1ST Terrestrial Broadcaster
2ND Terrestrial Broadcaster
Cable MSO
Satellite Broadcaster
Various Internet Broadcaster or Private CPs
SP
Internet
100
Client-a
Client-n

FIG.2

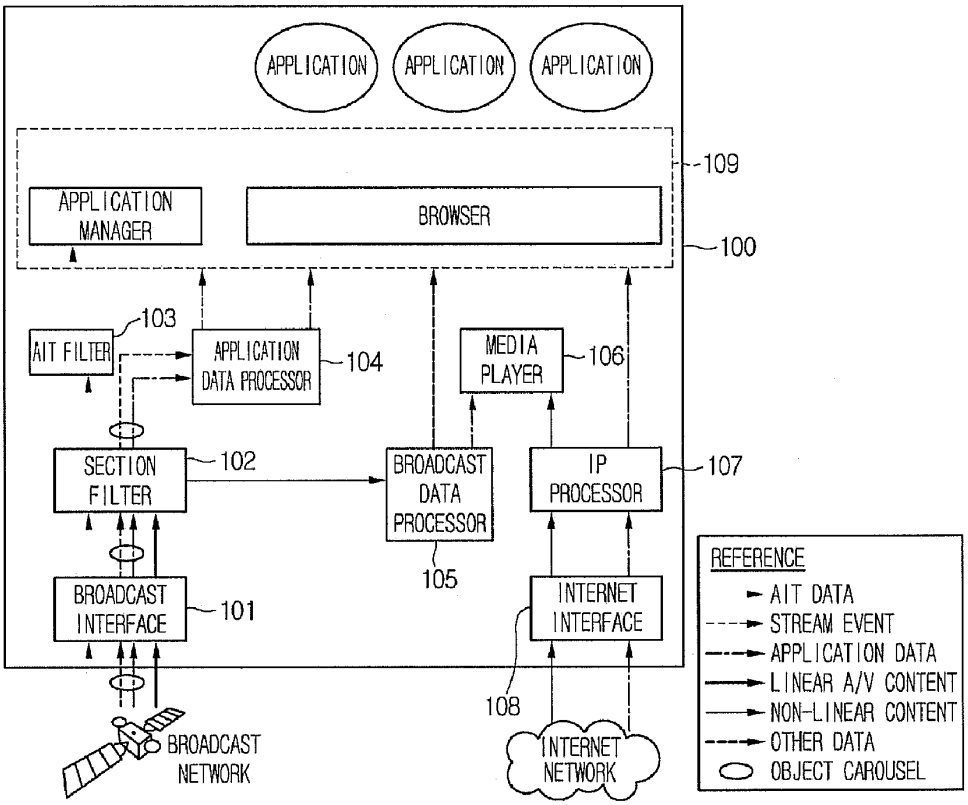
APPLICATION
APPLICATION
APPLICATION
109
APPLICATION MANAGER
BROWSER
100
103
AIT FILTER
APPLICATION DATA PROCESSOR
104
MEDIA PLAYER
106
SECTION FILTER
102
BROADCAST DATA PROCESSOR
IP PROCESSOR
107
105
BROADCAST INTERFACE
101
INTERNET INTERFACE
108
BROADCAST NETWORK
INTERNET NETWORK
REFERENCE
AIT DATA
STREAM EVENT
APPLICATION DATA
LINEAR A/V CONTENT
NON-LINEAR CONTENT
OTHER DATA
OBJECT CAROUSEL

FIG.3

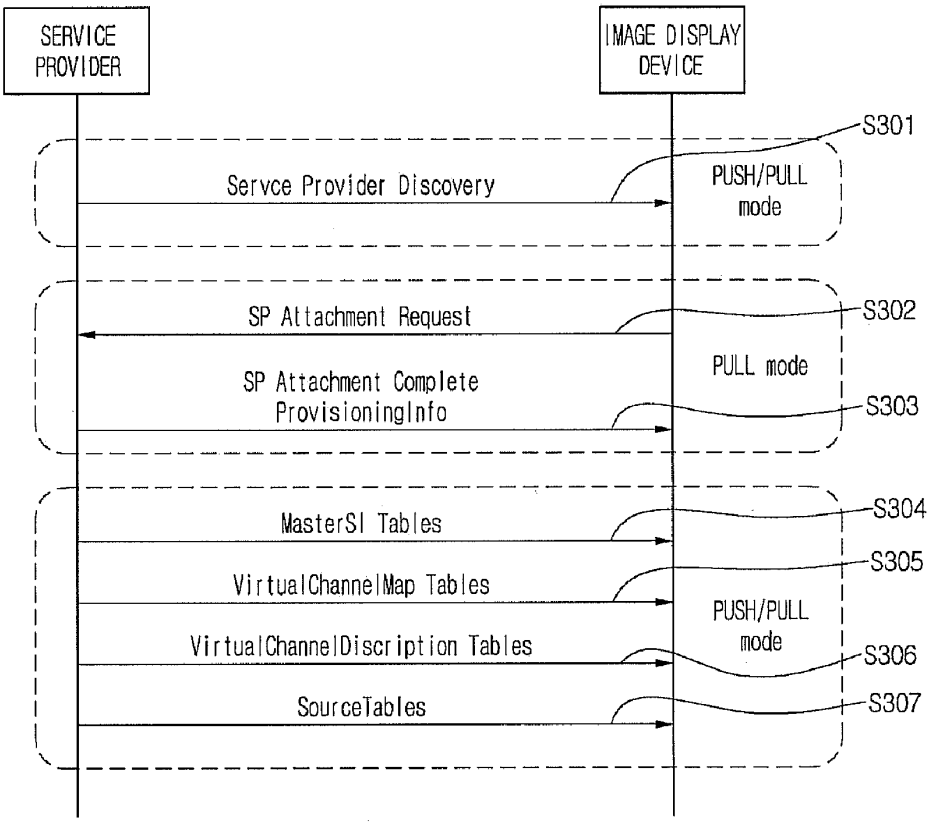
SERVICE PROVIDER
IMAGE DISPLAY DEVICE
S301
Servce Provider Discovery
PUSH/PULL mode
SP Attachment Request
S302
PULL mode
SP Attachment Complete ProvisioningInfo
S303
MasterSI Tables
S304
VirtualChannelMap Tables
S305
PUSH/PULL mode
VirtualChannelDiscription Tables
S306
SourceTables
S307

FIG.4

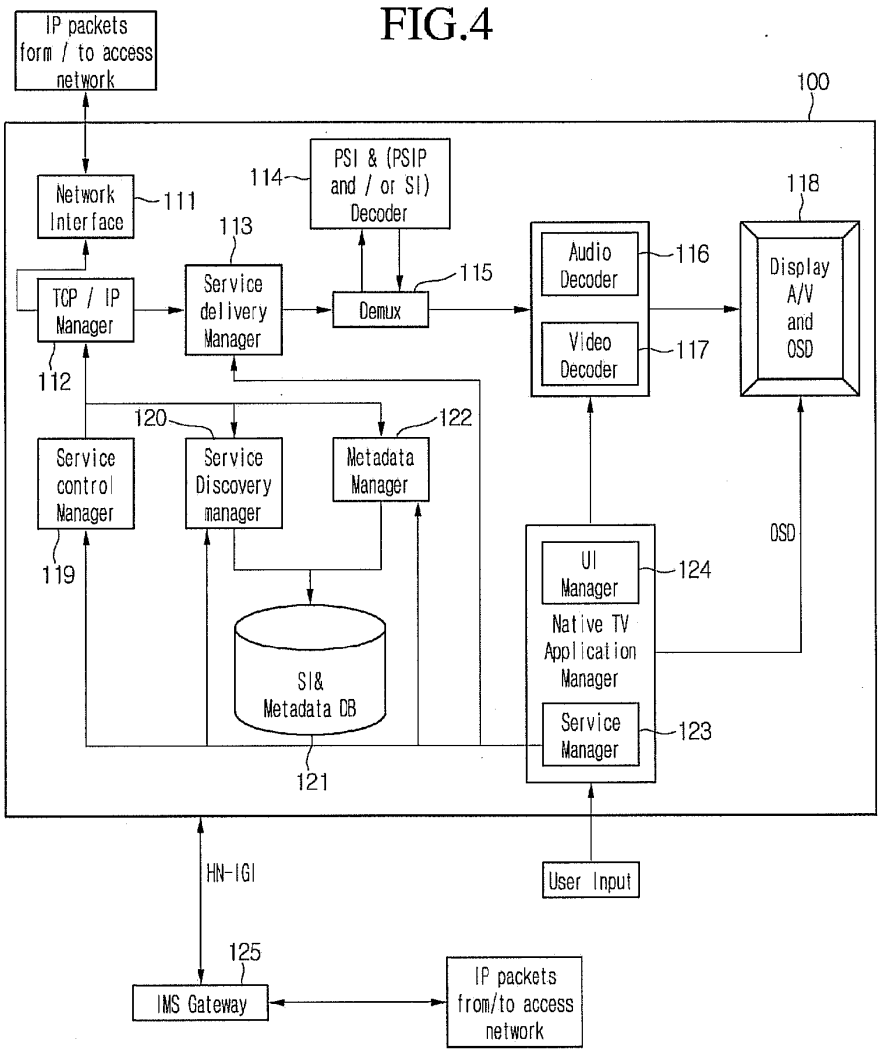
IP packets form / to access network
100
Network Interface
111
PSI & (PSIP and / or SI) Decoder
114
113
118
TCP / IP Manager
112
Service delivery Manager
Demux
115
Audio Decoder
116
Video Decoder
117
Display A/V and OSD
120
122
Service control Manager
119
Service Discovery manager
Metadata Manager
OSD
UI Manager
124
Native TV Application Manager
SI& Metadata DB
Service Manager
123
121
HN-IGI
User Input
125
IMS Gateway
IP packets from/to access network

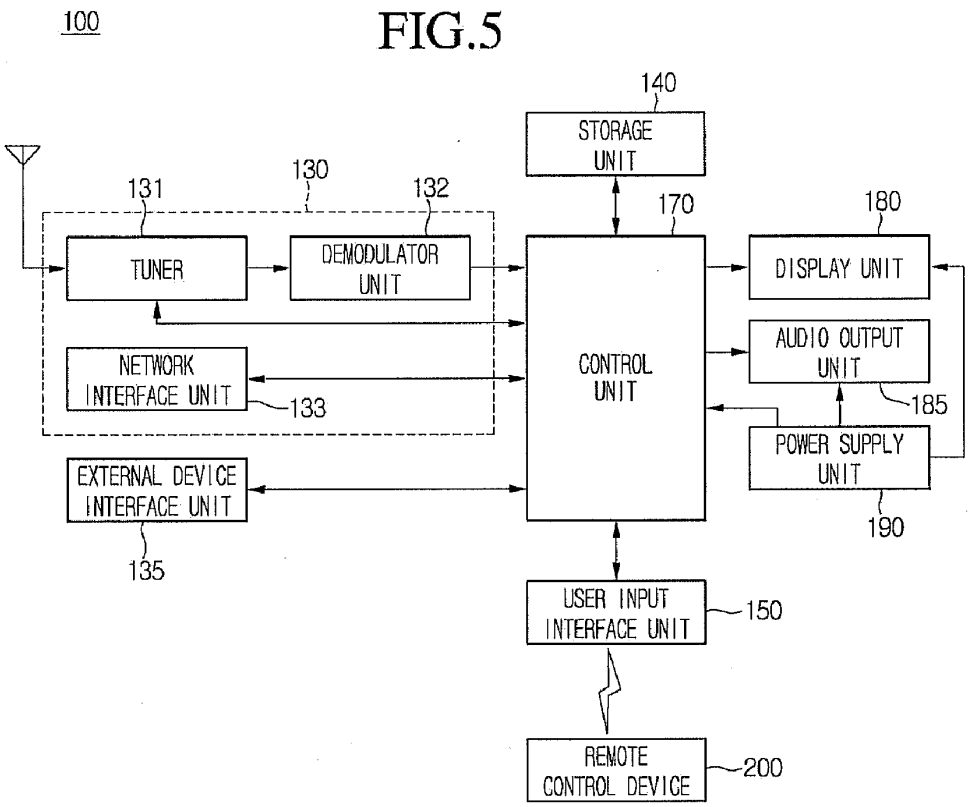
100
FIG.5
140
STORAGE UNIT
130
131
132
170
180
TUNER
DEMODULATOR UNIT
DISPLAY UNIT
NETWORK INTERFACE UNIT
133
CONTROL UNIT
AUDIO OUTPUT UNIT
185
POWER SUPPLY UNIT
EXTERNAL DEVICE INTERFACE UNIT
190
135
USER INPUT INTERFACE UNIT
150
REMOTE CONTROL DEVICE
200

FIG.6

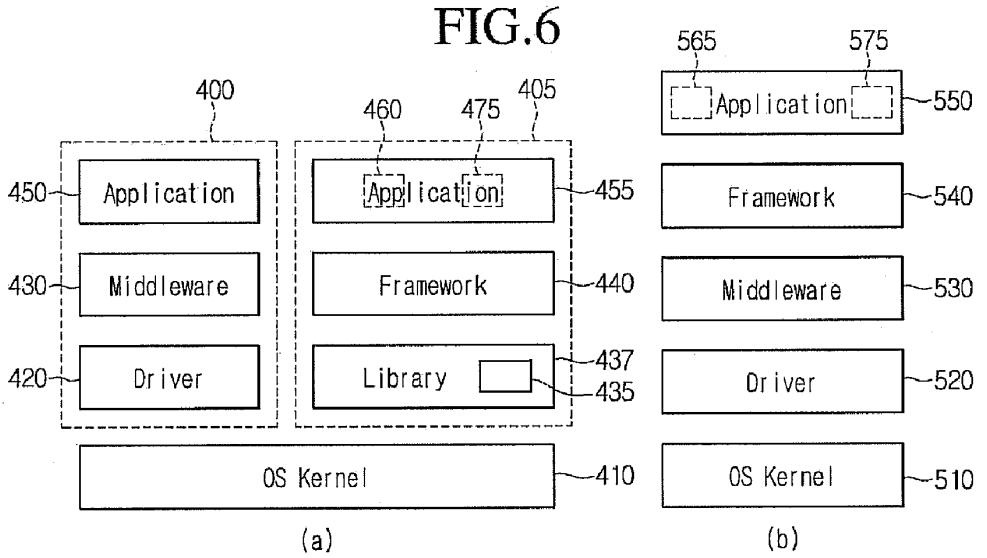
400
460
475
405
450
Application
Application
455
430
Middleware
Framework
440
420
Driver
Library
437
435
OS Kernel
410
(a)
565
575
Application
550
Framework
540
Middleware
530
Driver
520
OS Kernel
510
(b)

FIG.7

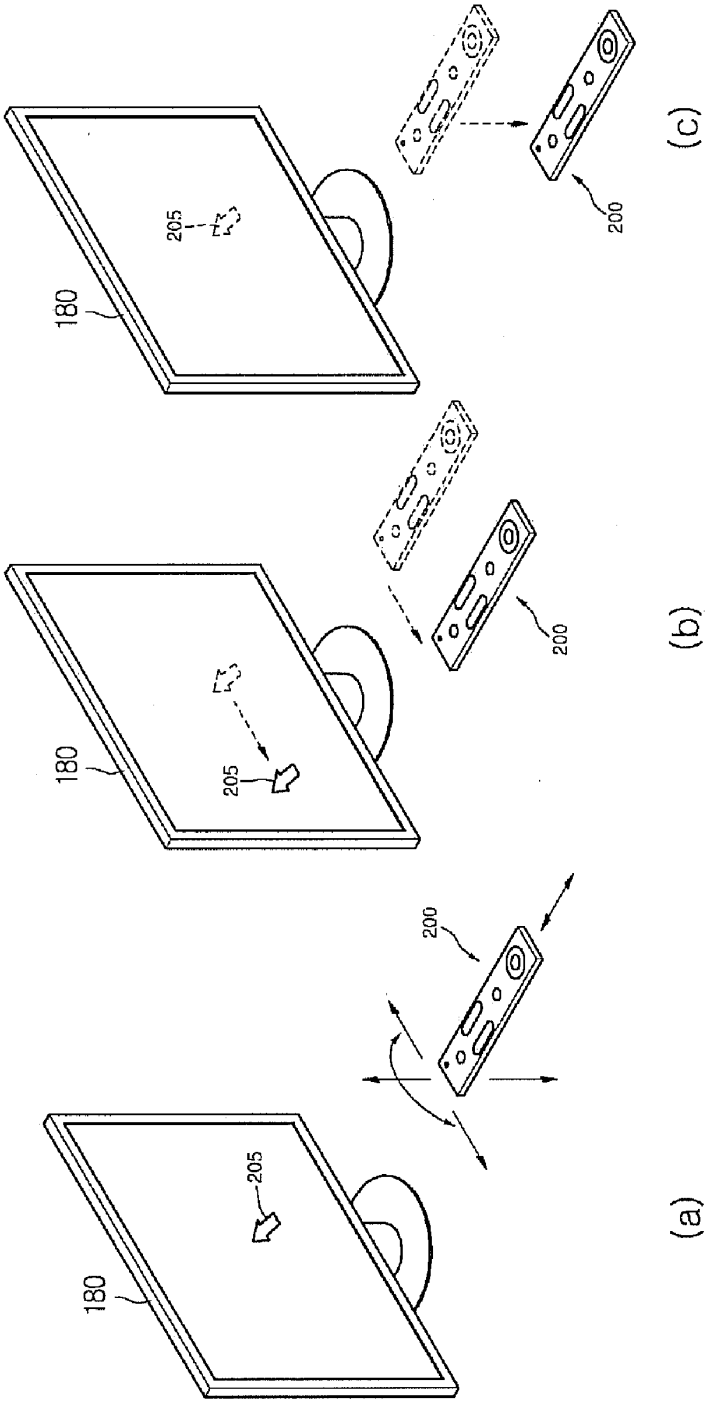

FIG.8

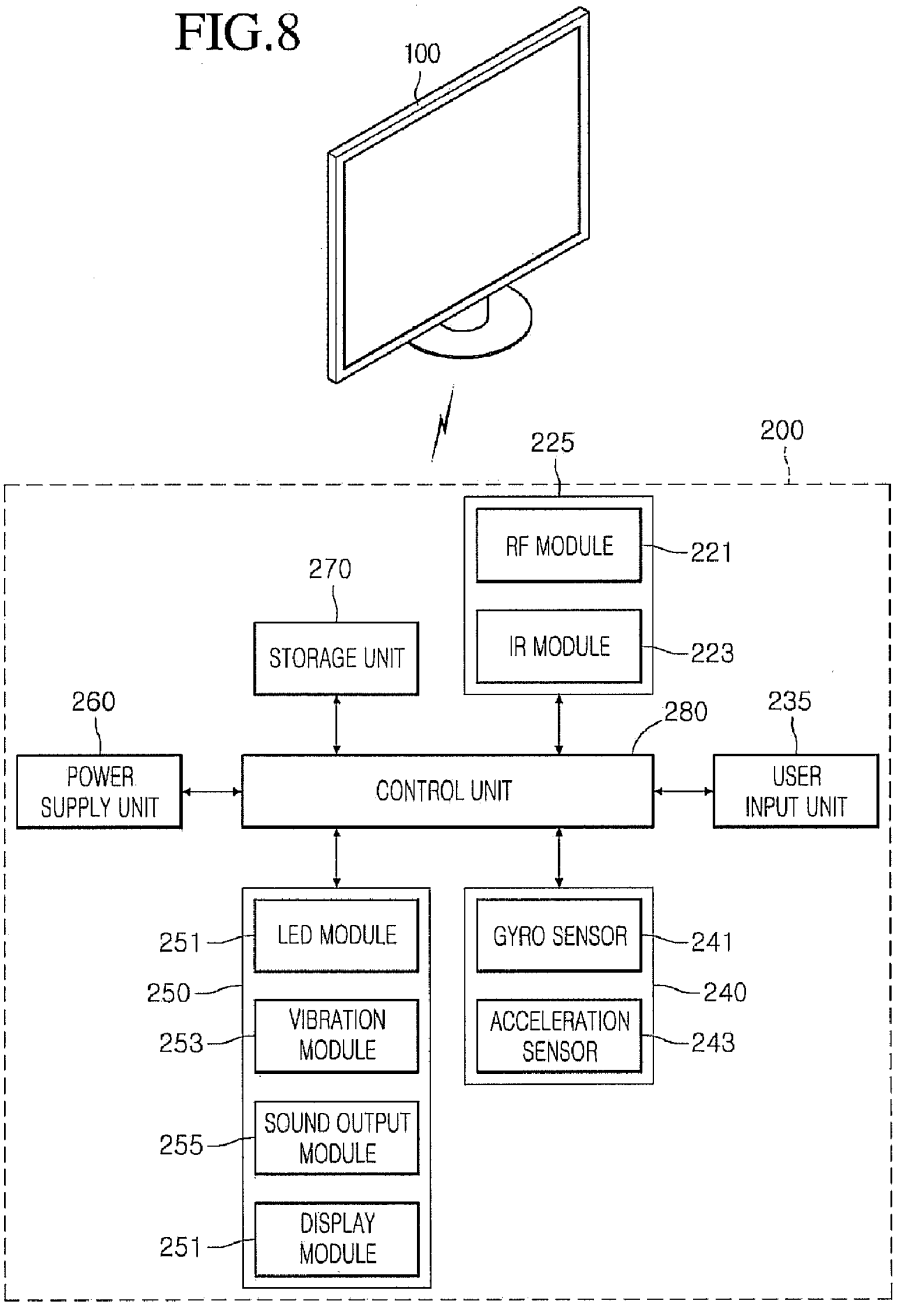
100
200
225
RF MODULE
221
IR MODULE
223
270
STORAGE UNIT
260
POWER SUPPLY UNIT
CONTROL UNIT
280
235
USER INPUT UNIT
251
LED MODULE
250
VIBRATION MODULE
253
SOUND OUTPUT MODULE
255
DISPLAY MODULE
251
GYRO SENSOR
241
240
ACCELERATION SENSOR
243

FIG.9

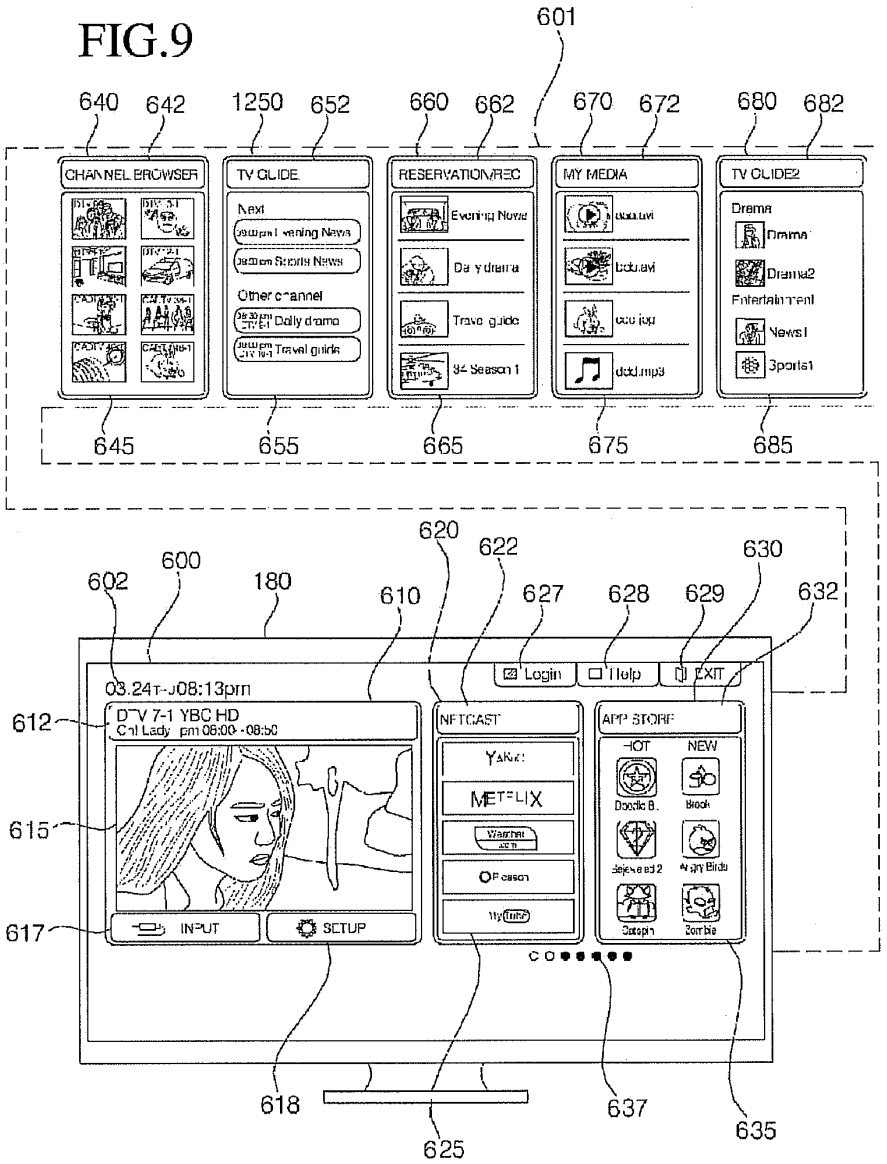
601
640
642
1250
652
660
662
670
672
680
682
CHANNEL BROWSER
TV GUIDE
Next
Other channel
Daily drama
Travel guide
RESERVATION/REC
Evening News
Daily drama
Travel guide
94 Season 1
MY MEDIA
TV GUIDE2
Drama
Drama1
Drama2
Entertainment
News1
Sports1
645
655
665
675
685
620
622
630
602
600
180
610
627
628
629
632
Login
Help
EXIT
612
615
617
INPUT
SETUP
NETCAST
APP STORE
HOT
NEW
618
637
625
635

FIG.10

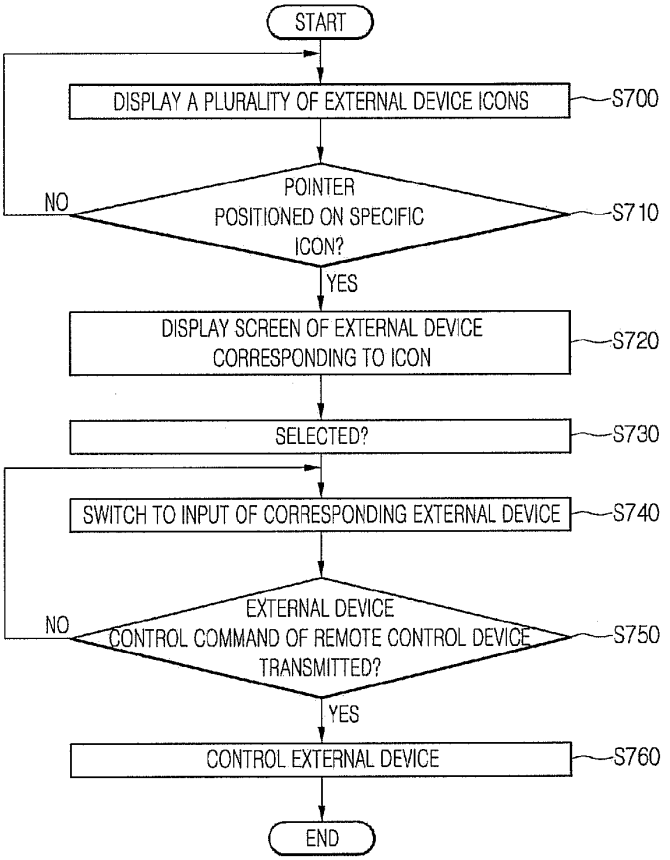
START
DISPLAY A PLURALITY OF EXTERNAL DEVICE ICONS
S700
POINTER POSITIONED ON SPECIFIC ICON?
NO
S710
YES
DISPLAY SCREEN OF EXTERNAL DEVICE CORRESPONDING TO ICON
S720
SELECTED?
S730
SWITCH TO INPUT OF CORRESPONDING EXTERNAL DEVICE
S740
EXTERNAL DEVICE CONTROL COMMAND OF REMOTE CONTROL DEVICE TRANSMITTED?
NO
S750
YES
CONTROL EXTERNAL DEVICE
S760
END

FIG.11

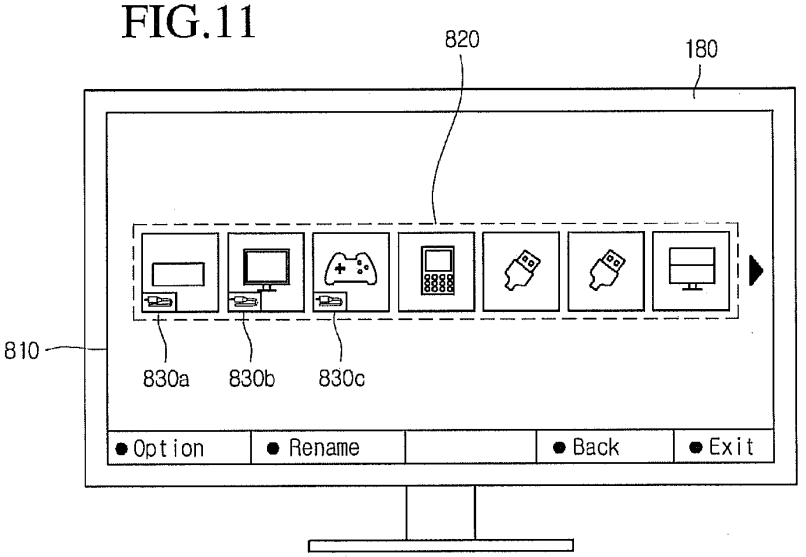
820
180
810
830a
830b
830c
Option
Rename
Back
Exit

FIG.12

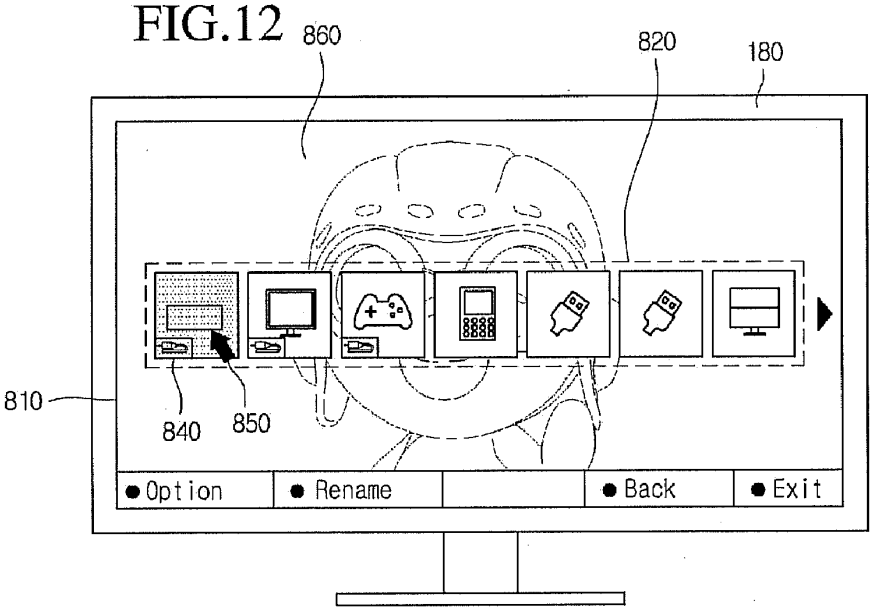

FIG.13

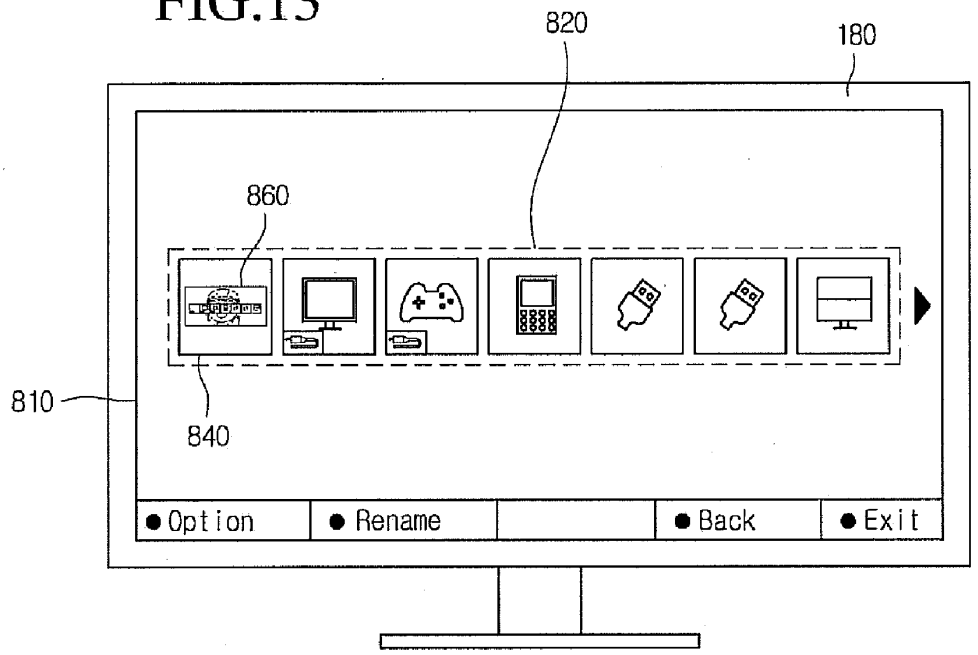

FIG.14

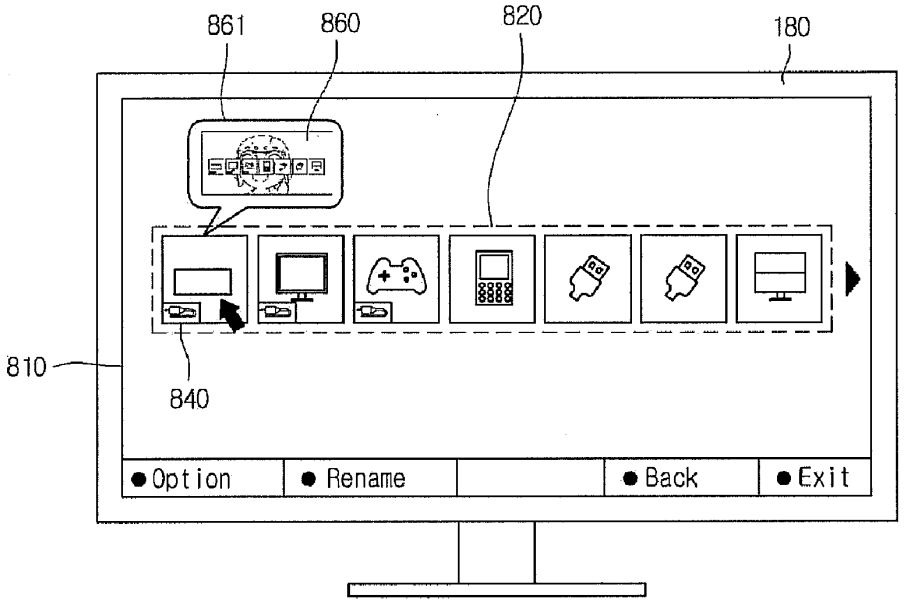

FIG.15

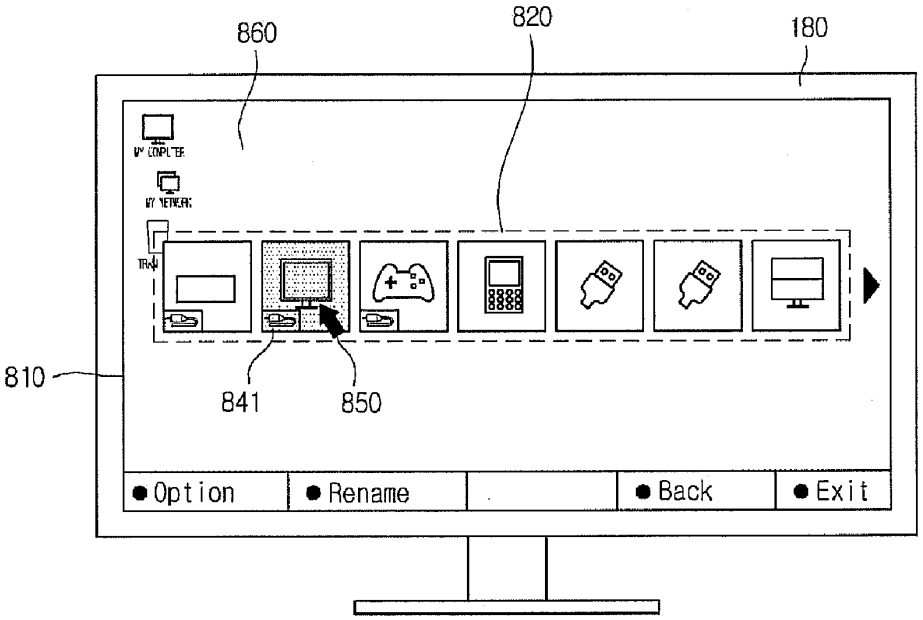

FIG.16

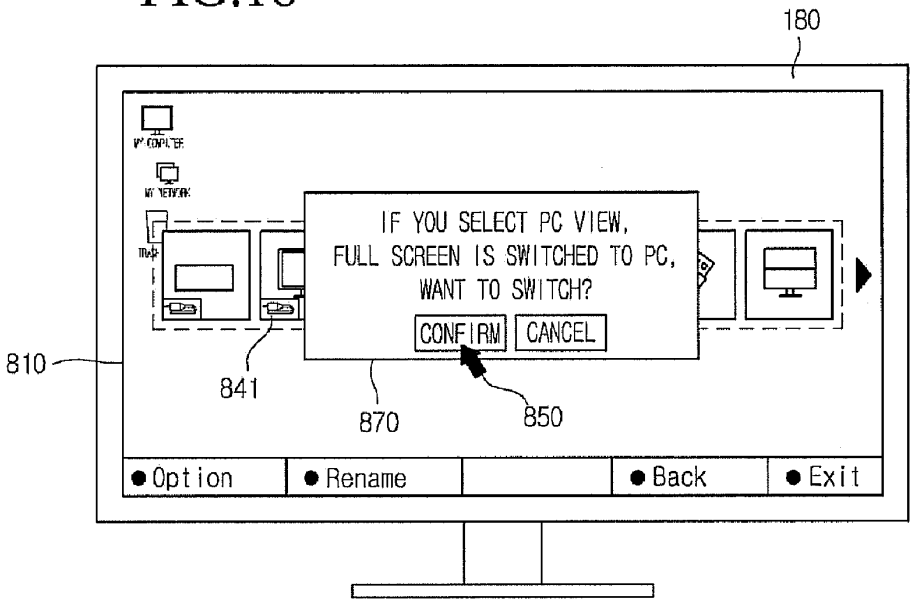
180
IF YOU SELECT PC VIEW,
FULL SCREEN IS SWITCHED TO PC,
WANT TO SWITCH?
CONFIRM
CANCEL
810
841
870
850
Option
Rename
Back
Exit

FIG.17

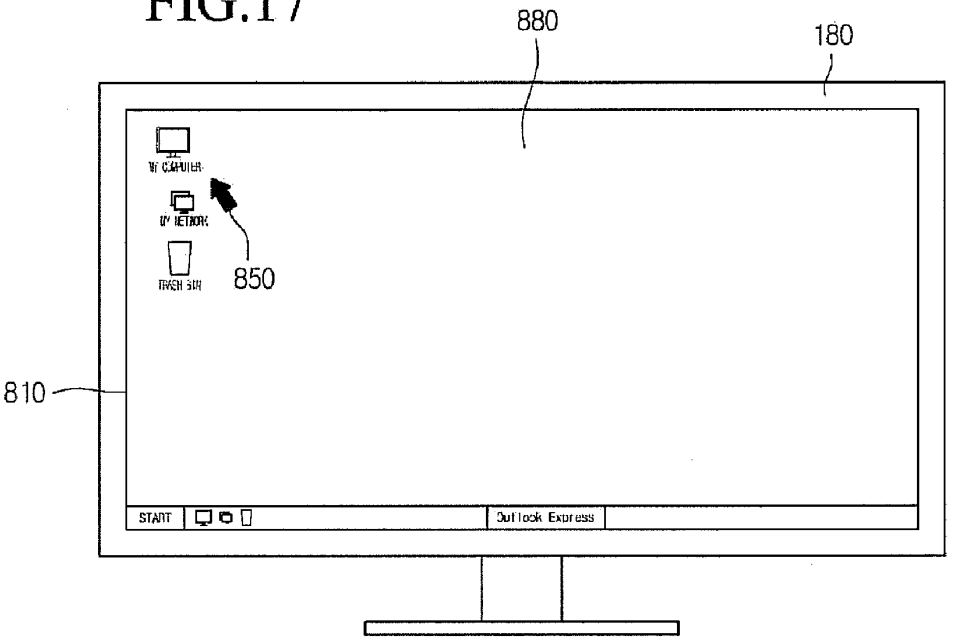

METHOD OF PROVIDING EXTERNAL DEVICE LIST AND IMAGE DISPLAY DEVICE

CROSS-REFERENCE TO RELATED APPLICATIONS

[0001] The present application claims priority under 35 U.S.C. 119 and 35 U.S.C. 365 to Korean Patent Application No. 10-2011-0088863 (filed on Sep. 2, 2011), which is hereby incorporated by reference in its entirety.

BACKGROUND

[0002] The present invention relates to an image display device, and more particularly, to a method for providing a list of external devices thereof.

[0003] Recently, digital TV services using a wire or wireless communication network are becoming more common. The digital TV services provide various services that typical analog broadcasting services cannot provide.

[0004] For example, an Internet Protocol Television (IPTV) service (i.e., one type of the digital TV services) provides interaction through which a user may actively select kinds of watching programs and watching time. The IPTV service may provide various additional services such as internet search, home shopping, and online game on the basis of the interaction.

SUMMARY

[0005] Embodiments provide a method of providing an external device list, which allows a user to recognize an input switch in advance before an image signal of an external device, which is applied to an image display device, is switched for input, and an image display device thereof.

[0006] In one embodiment, a method of providing an external device list to an image display device includes: displaying a plurality of external device icons connectible to the image display device; positioning a pointer on a first external device icon among the plurality of external device icons; and displaying on a screen of the image display device an image signal of an external device corresponding to the first external device icon having the pointer thereon.

[0007] In another embodiment, an image display device includes: a display unit displaying a plurality of external device icons connectible to the image display device; and a control unit performing a control to display an image signal of an external device corresponding to a first external device icon having a pointer thereon when the pointer is positioned on the first external device icon among the plurality of external device icons.

[0008] The details of one or more embodiments are set forth in the accompanying drawings and the description below. Other features will be apparent from the description and drawings, and from the claims.

BRIEF DESCRIPTION OF THE DRAWINGS

[0009] FIG. **1** is a view illustrating a configuration of a broadcast system according to an embodiment.

[0010] FIG. **2** is a view illustrating a configuration of a broadcast system according to another embodiment.

[0011] FIG. **3** is a view illustrating a method for transmitting/receiving data between an image display device and a service provider according to an embodiment.

[0012] FIG. **4** is a block diagram illustrating a configuration of an image display device according to an embodiment.

[0013] FIG. **5** is a block diagram illustrating a configuration of an image display device according to another embodiment.

[0014] FIG. **6** is a view illustrating a platform structure of an image display device according to embodiments.

[0015] FIG. **7** is a view illustrating a method of controlling an operation of an image display device by using a remote control device according to an embodiment.

[0016] FIG. **8** is a block diagram illustrating a configuration of a remote control device according to an embodiment.

[0017] FIG. **9** is a view illustrating a configuration of a home screen displayed on an image display device according to an embodiment.

[0018] FIG. **10** is a flowchart illustrating a method of providing an external device list according to a first embodiment.

[0019] FIGS. **11** to **17** are views illustrating a screen that provides an external device list of an image display device according to the first embodiment.

DETAILED DESCRIPTION OF THE EMBODIMENTS

[0020] Hereinafter, a method for providing an external device list and an image display device thereof will be described in more detail with reference to the accompanying drawings.

[0021] The image display device as an intelligent image display device having a computer supporting function in addition to a broadcasting receiving function further includes an internet function besides a solid broadcasting receiving function so that it may have an easy to use interface such as a handwriting input device, a touch screen, or a space remote controller. Moreover, after accessing internet and a computer with a wire or wireless internet supporting function, a function for e-mail, web browsing, banking, or game may be available. For such various functions, a standardized general OS may be used.

[0022] Accordingly, the image display device according to an embodiment may perform user-friendly various functions because a variety of applications may be freely added or deleted on a general OS kernel. The image display device may be a network TV, HBBTV, and a smart TV, for a specific example, and may be applied to a smart phone, if necessary.

[0023] Furthermore, although embodiments of the present invention will be described with reference to the accompanying drawings and contents therein, the present invention is not limited thereto.

[0024] The terms used in this specification are selected from currently widely used general terms in consideration of functions of the present invention, but may vary according to the intentions or practices of those skilled in the art or the advent of new technology. Additionally, in certain cases, there may be terms that an applicant may arbitrarily select, and in this case, their meanings are described below. Accordingly, the terms used in this specification should be interpreted on the basis of substantial implications that the terms have and the contents across this specification not the simple names of the terms

[0025] FIG. **1** is a view illustrating a configuration of a broadcasting system, that is, a schematic view illustrating an entire broadcasting system including an image display device according to an embodiment.

[0026] Referring to FIG. **1**, the broadcasting system includes a Content Provider (CP) **10**, a Service Provider (SP) **20**, a Network Provider (NP) **30** and a Home Network End User (HNED) **40**.

[0027] The HNED **40** may correspond to a client **100**, i.e., the image display device according to an embodiment, and for example, the client **100** may be a network TV, a smart TV, and an IPTV.

[0028] Moreover, the CP **10** manufactures and provides various contents. As shown in FIG. **1**, the CP **10** may be a terrestrial broadcaster, a cable System Operator (SO), a Multiple System Operator (MSO), a satellite broadcaster, or an Internet broadcaster.

[0029] Additionally, the CP **10** may provide various applications besides the broadcast contents. This will be described in more detail later.

[0030] The SP **20** may package contents that the CP **10** provides, and provides the packaged contents as services. For example, the SP **20** may package first terrestrial broadcast, second terrestrial broadcast, cable MSO, satellite broadcast, various internet broadcasts, and applications, and then, provide them to a user.

[0031] Moreover, the SP **20** may provide services to the client **100** through a unicast or multicast method.

[0032] The unicast method is a 1:1 data transmission method between one transmitter and one receiver. For example, in the case of the unicast method, when a receiver requests data to a server, the server transmits the requested data to the receiver in response to the request.

[0033] The multicast method is to transmit data to a plurality of receivers in a specific group. For example, a server may transmit data to a plurality of pre-registered receivers simultaneously. In order for such a multicast registration, an Internet Group Management Protocol (IGMP) may be used.

[0034] The NP **30** may provide a network to provide the service to the client **100**, and the client **100** may establish a Home Network End User (HNED) to receive the service.

[0035] Conditional Access or Content Protection may be used as a means to protect contents transmitted from the system. As examples of the Conditional Access or Content Protection, methods such as CableCARD and Downloadable Conditional Access System (DCAS) may be used.

[0036] Moreover, it is possible for the client **100** to provide contents via a network. In this case, the client **100** may become a CP, and the CP **10** may receive contents from the client **100**. Accordingly, a bidirectional contents service or data service may be available.

[0037] According to an embodiment, the CP **10** may provide a network service such as a Social Network Site (SNS), a blog, a micro blog, or an instant messenger.

[0038] For example, the CP **10** providing the SNS service may include a server (not shown) storing various kinds of contents such as texts or uploaded images that a plurality of users create in the SNS.

[0039] In more detail, a user accesses the server of the CP **10** providing the SNS service by using an image display device, and designates accounts that the user wants, so that the user may confirm messages created by the plurality of the designated accounts.

[0040] Additionally, if a user requests the SNS service, an image display device, i.e., the client **100**, accesses the server of the CP **10** in order to receive the messages of the designated accounts, and then, displays the received messages sequentially in order of a corresponding message created, for example, displays them in a top to bottom direction.

[0041] Referring to FIG. **2**, the image display device **100** corresponding to the client of FIG. **1** may be connected to a broadcasting network and internet network.

[0042] For example, the image display device **100** may include a broadcast interface **101**, a section filter **102**, an AIT filter **103**, an application data processor **104**, a broadcast data processor **105**, a media player **106**, an internet protocol processor **107**, an internet interface **108**, and a runtime module **109**.

[0043] Moreover, the broadcast interface **101** of the image display device **100** may receive Application Information Table (AIT) data, real time broadcast content, application data or a stream event. The real time broadcast content may be Linear A/V Content.

[0044] The section filter **102** performs section filtering on four data received through the broadcast interface **101** in order to transmit AIT data into the AIT filter **102**, linear A/V content into the broadcast data processor **105**, and stream event and application data into the application data processor **104**.

[0045] The internet interface **108** may receive Non-Linear A/V content and application data. For example, the Non-Linear A/V content may be Content On Demand (COD) application.

[0046] Furthermore, the Non-Linear A/V content may be transmitted to the media player **106**, and the application data may be transmitted to the runtime module **109**.

[0047] Additionally, the runtime module **109** may include an application manager and a browser. The application manager may control a life cycle on interactive application by using AIT data, and the browser may display and process the interactive application

[0048] FIG. **3** is a view illustrating a method for transmitting/receiving data between an image display device and a SP according to an embodiment.

[0049] Referring to FIG. **3**, the SP performs a service provider discovery operation in operation S**301**. The image display device transmits a SP Attachment Request signal in operation S**302**. Once the SP attachment is completed, the image display device receives provisioning information in operation S**303**. Furthermore, the image display device receives a master SI table from the SP in operation S**304**, a Virtual Channel Map table in operation S**305**, a Virtual Channel Description table in operation S**306**, and a Source table in operation S**307**.

[0050] For example, the service provider discovery operation may refer to a process that SPs providing IPTV related services search for a server that provides information on the services that the SPs provide.

[0051] A method of searching for an address list that helps receiving information on a Service Discovery (SD) server, for example, SP discovery information, may be the following three methods. First, an address preset in an image display device or an address manually set by a user may be used. Second, a DHCP based SP discovery method may be used. Third, a DNS SRV-based SP discovery method may be used.

[0052] Moreover, the image display device accesses a server having an address obtained by one of the three methods in order to receive a service provider discovery record that contains information necessary for service discovery for each SP, and performs a service search operation by using the received service provider discovery record. Moreover, the above processes may be available in a push mode or a pull mode.

[0053] Furthermore, the image display device accesses a SP attachment server designated as a SP attachment locator of

a SP discovery record, and performs a registration procedure (or a service attachment procedure).

[0054] Moreover, the image display device accesses an authentication service server of the SP designated as the SP authentication locator to perform an additional authentication procedure, and then, performs a service authentication procedure.

[0055] After the service attachment procedure is successful, data transmitted from the server to the image display device may have a form of a provisioning information table.

[0056] During the service attachment operation, the image display device includes its ID and position information in data that are transmitted to the server, and a service attachment server may specify a service that the image display device subscribes on the basis of the data.

[0057] Address information used for obtaining Service Information that the image display device wants to receive may be provided in a form of the provisioning information table. In addition, the address information may correspond to access information on the master SI table. In this case, providing a customized service for each subscriber may be easy.

[0058] Moreover, the Service Information may include a master SI table record for managing access information on a virtual channel map and its version, a virtual channel map table for providing a service list in a package form, a virtual channel description table including detailed information of each channel, and a source table including access information for accessing an actual service.

[0059] FIG. **4** is a block diagram illustrating a configuration of an image display device according to an embodiment.

[0060] Referring to FIG. **4**, the image display device **100** includes an Network Interface **111**, a TCP/IP Manager **112**, a Service Delivery Manager **113**, a Demux **115**, a PSI&(PSIP and/or SI) decoder **114**, an Audio Decoder **116**, a Video Decoder **117**, a Display A/V and OSD Module **118**, a Service Control Manager **119**, a Service Discovery Manager **120**, a Metadata Manager **122**, an SI&Metadata DB **121**, a UI manager **124**, and a service manager **123**.

[0061] The network interface **111** receives or transmits packets from or to a network. That is, the network interface unit **111** may receive services and contents from a SP via a network.

[0062] The TCP/IP manager **112** may be involved in delivering packets from a source to a destination, which are received and transmitted by the image display device **100**. Moreover, the TCP/IP manager **112** classifies the received packets in order correspond to a proper protocol, and outputs the classified packets into the service delivery manager **113**, the service discovery manager **120**, the service control manager **119**, and the metadata manager **122**.

[0063] Additionally, the service delivery manager **113** is responsible for controlling the received service data. For example, when the service delivery manager **113** controls real-time streaming data, RTP/RTCP may be used.

[0064] When the real-time streaming data are transmitted using the RTP, the service delivery manager **113** parses the received data packet according to the RTP and transmits the parsed data to the Demux **115**, or stores the received data packet in the SI&Metadata DB **121**. Moreover, the service delivery manager **113** may feed back the network reception information to a server that provides services by using the RTCP.

[0065] The Demux **115** demultiplexes the received packet into audio, video, and Program Specific Information (PSI) data in order to transmit them into the audio/video decoders **116** and **117** and the PSI&(PSIP and/or SI) Decoder **114**.

[0066] The PSI&(PSIP and/or SI) Decoder **114** may decode service information such as PSI, and for example, may receive a PSI section, a Program and Service Information Protocol (PSIP) section, or a Service Information (SI) section demultiplexed in the Demux **115** in order to decode them.

[0067] Moreover, the PSI&(PSIP and/or SI) Decoder **114** may decode the received sections to create a database for service information, and the service information may be stored in the SI&Metadata DB **121**.

[0068] The audio/video decoders **116** and **117** may decode vide data and audio data received from the Demux **115**, and the decoded audio and video data may be provided to a user through the Display A/V and OSD Module **118**.

[0069] Moreover, the UI manager **124** and the service manager **123** may manage an overall status of the image display device **100**, provide a user interface, and mange another manager.

[0070] For example, the UI manager **124** provides a Graphic User Interface (GUI) for a user through an On Screen Display (OSD), and receives a key input from a user in order to perform an operation of a receiver according to the key input. Moreover, when receiving a key input signal for a channel selection from a user, the UI manager **124** may transmit the key input signal to the service manager **123**.

[0071] The service manager **123** may control a service related manager such as the service delivery manager **113**, the service discovery manager **120**, the service control manager **119**, and the metadata manager **122**.

[0072] Additionally, the service manager **123** creates a channel map, and selects a channel by using the channel map according to a key input received from the UI manager **124**.

[0073] And, the service manager **123** receives service information on a channel from the PSI&(PSIP and/or SI) Decoder **114**, and sets audio/video Packet Identifier (PID) of the selected channel in the Demux **115**.

[0074] The service discovery manager **120** provides information necessary for selecting s SP that provides service. For example, on receiving a signal on channel selection from the service manager **123**, the service discovery manager **120** may find a service by using the received signal.

[0075] Moreover, the service control manager **119** is responsible for service selection and control. For example, when a user selects a Live Broadcasting service like a typical broadcasting method, IGMP or RTSP is used. When a service such as Video On Demand (VOD) is selected, RTSP is used for service selection and control.

[0076] The RTSP protocol provides a trick mode with respect to real-time streaming. The service control manager **119** may initialize and manage a section passing through an IMC gateway by using an IP Multimedia Subsystem (IMS) and a Session Initiation Protocol (SIP).

[0077] The metadata manager **122** manages service related metadata and stores the metadata in the SI&Metadata DB **121**.

[0078] And, the SI&Metadata DB**121** may store the service information decoded by the PSI&(PSIP and/or SI) Decoder **114**, the metadata that the metadata manager **122** manages, and the information necessary for selecting a SP that the service discovery manager **120** provides.

[0079] Furthermore, the SI&Metadata DB **121** may store setup data on a system, and for example, may be implemented using NonVolatile RAM (NVRAM) or flash memory.

[0080] Additionally, an IG **750** may be a gateway including functions necessary for accessing an IMS based IPTV service.

[0081] FIG. **5** is a block diagram illustrating a configuration of an image display device according to another embodiment.

[0082] Referring to FIG. **5**, the image display device **100** may include a broadcast receiving unit **130**, an external device interface unit **135**, a storage unit **140**, a user input interface unit **150**, a control unit **170**, a display unit **180**, an audio output unit **185**, and a power supply unit **190**. Moreover, the broadcast receiving unit **130** may include a tuner **131**, a demodulation unit **132**, and a network interface unit **133**.

[0083] The tuner **131** may select a channel selected by a user among Radio Frequency (RF) broadcast signals received through an antenna, or an RF broadcast signal corresponding to all pre-stored channels, and may convert the selected RF broadcast signal into an intermediate frequency signal or a baseband image or sound signal.

[0084] For example, the tuner **131** converts the selected RF broadcast signal into a digital IF signal DIF if it is a digital broadcast signal, or into an analog baseband image or sound signal CVBS/SIF if it is an analog broadcast signal.

[0085] That is, the tuner **131** may process both a digital broadcast signal and an analog broadcast signal, and the analog baseband image or sound signal CVBS/SIF outputted from the tuner **131** may be directly inputted to the control unit **170**.

[0086] Moreover, the tuner **131** may receive an RF broadcast signal of a single carrier according to the Advanced Television System Committee (ATSC) format or an RF broadcast signal of a plurality of carriers according to the Digital Video Broadcasting (DVB) format.

[0087] Furthermore, the tuner **131** may sequentially select RF broadcast signals of all broadcast channels stored through a channel memory function from RF broadcast signals received through an antenna, and then, may convert the selected RF broadcast signals into an intermediate frequency signal or a baseband image or sound signal.

[0088] The demodulation unit **132** may receive the digital IF signal DIF converted by the tuner **131**, and then, may perform a demodulation operation thereon. For example, if the digital IF signal outputted from the tuner **131** is the ATSC format, the demodulator **132** may perform an 8-Vestigal Side Band (8-VSB) demodulation.

[0089] Additionally, the demodulation unit **132** may perform channel decoding, and for this, may include a Trellis Decoder, a De-interleaver, and a Reed Solomon Decoder to perform Trellis decoding, de-interleaving, and Reed Solomon decoding.

[0090] For example, if the digital IF signal outputted from the tuner **131** is the DVB format, the demodulation unit **132** may perform Coded Orthogonal Frequency Division Modulation (COFDMA) modulation.

[0091] Additionally, the demodulation unit **132** may perform channel decoding, and for this, may include a convolution decoder, a De-interleaver, and a Reed Solomon Decoder to perform convolutional decoding, de-interleaving, and Reed Solomon decoding.

[0092] The demodulation unit **132** may output a stream signal TS after performing demodulation and channel decoding, and the stream signal may be a signal into which an image signal, sound signal, or a data signal is multiplexed.

[0093] For example, the stream signal may be an MPEG-2 Transport Stream (TS) into which an MPEG-2 standard image signal and a Dolby AC-3 standard sound signal are multiplexed. In more detail, the MPEG-2 TS may include a 4 byte header and a 184 byte payload.

[0094] Furthermore, the demodulation unit **132** may include an ATSC demodulation unit and a DVB demodulation unit separately according to the ATSC format and the DVB format.

[0095] The stream signal outputted from the demodulation unit **132** may be inputted to the control unit **170**. The control unit **180** may output an image to the display unit **180** and a sound to the audio output unit **185** after demultiplexing and processing an image/sound signal.

[0096] The external device interface unit **135** may connect an external device with the image display device **100**, and for this, may include an A/V input/output unit (not shown) or a wireless communication unit (not shown).

[0097] The external device interface unit **135** may be used for wire/wireless connection of an external device such as a Digital Versatile Disk (DVD) player, a Bluray player, a game console, a camera, a camcorder, and a computer (such as a notebook computer).

[0098] Moreover, the external device interface unit **135** may deliver an image, sound, or data signal inputted from a connected external into the control unit **170** of the image display device **100**, and may output the image, sound, or data signal processed in the control unit **170** into the connected external device.

[0099] The A/V input/output unit may include a USB terminal, a Composite Video Banking Sync (CVBS) terminal, a component terminal, an S-video terminal (i.e., an analog type), a Digital Visual Interface (DVI) terminal, a High Definition Multimedia Interface (HDMI) terminal, an RGB terminal, and a D-SUB terminal, in order to input an image and sound signal of an external device into the image display device **100**.

[0100] Furthermore, the wireless communication unit may perform a short-range wireless communication with another electronic device. For example, the image display device **100** and another electronic device may be connected to a network through communication standards such as Bluetooth, Radio Frequency Identification (RFID), infrared Data Association (IrDA), Ultra Wideband (UWB), ZigBee, and Digital Living Network Alliance (DLNA).

[0101] Moreover, the external device interface unit **135** is connected to various set top boxes through at least one of the above various terminals in order to perform an input/output operation of a set top box.

[0102] In addition, the external device interface unit **135** may receive applications or lists of applications in an adjacent external device, and then may deliver them to the control unit **170** or the storage unit **140**.

[0103] The network interface unit **133** may provide an interface for connecting the image display device **100** to a wire/wireless network including an internet network. For example, the network interface unit **133** may include an Ethernet terminal for accessing a wired network or may be connected to a wireless network through a communication standard such as Wireless LAN (WLAN) such as Wi-Fi, Wireless broadband (Wibro), World Interoperability for Microwave Access (Wimax), and High Speed Downlink Packet Access (HSDPA).

[0104] Moreover, the network interface unit **133** may transmit/receive data to/from another user or another electronic device via a connected network or another network linked to the connected network.

[0105] Additionally, the network interface unit **133** may transmit some contents data stored in the image display device **100** to a selected user or electronic device among users or other electronic devices pre-registered in the image display device **100**.

[0106] The network interface unit **133** may access a predetermined web page via a connected network or another network linked to the connected network. That is, the network interface unit **133** may access a predetermined web page via a network to transmit/receive data to/from a corresponding sever.

[0107] Then, the network interface unit **133** may receive contents or data provided from a CP or a network operator. That is, the network interface unit **133** may receive contents such as movies, advertisings, games, VODs, and broadcast signals and information thereon, which are provided from a CP or an NP via a network.

[0108] Additionally, the network interface unit **133** may receive update information and update files of a firmware provided from a CP or a network operator, and may transmit data to an internet provider, a CP, or a network operator.

[0109] The network interface unit **133** may select and receive a wanted application from applications open to air via a network.

[0110] The storage unit **140** may store a program for processing and controlling each signal in the control unit **170**, and may store the processed image, sound or data signals.

[0111] Moreover, the storage unit **140** may perform a function for temporarily storing image, sound or data signals inputted from the external device interface unit **135** or the network interface unit **133**, and may store information on a predetermined broadcast channel through a channel memory function.

[0112] The storage unit **140** may store applications or lists of applications inputted from the external device interface unit **135** or the network interface unit **133**.

[0113] The storage unit **140** may include a storage medium having at least one type of a flash memory type, a hard disk type, a multimedia card micro type, a card memory type (for example, SD or XD memory), a RAM type, and an EEPROM type.

[0114] The image display device **100** may play contents files stored in the storage unit **140** such as movie files, still image files, music files, document files, and application files and may provide them to a user.

[0115] The user input interface unit **150** may deliver a signal that a user inputs to the control unit **170** or may deliver a signal from the control unit **170** to a user. For example, the user input interface unit **150** may receive a control signal such as power on/off, channel selection, and screen setting from a remote control device **200** and may process the received control signal according to various communication methods such as an RF communication method or an IR communication method. Or, the user input interface unit **150** may transmit a control signal from the control unit **170** to the remote control device **200**.

[0116] Additionally, the user input interface unit **150** may deliver to the control unit **170** a control signal inputted from a local key (not shown) such as a power key, a channel key, a volume key, and a setting key.

[0117] For example, the user input interface unit **150** may deliver to the control unit **170** a control signal inputted from a sensing unit (not shown) that senses a gesture of a user, and may transmit a signal from the control unit **170** to a sensing unit (not shown). Moreover, the sensing unit (not shown) may include a touch sensor, a sound sensor, a position sensor, and a motion sensor.

[0118] The control unit **170** may demultiplex a stream inputted from the tuner **131**, the demodulation unit **132**, or the external device interface unit **135**, or may process demultiplexed signals in order to generate and output a signal for image or sound output.

[0119] The image signal processed in the control unit **170** is inputted to the display unit **180**, and then, is displayed as an image corresponding to a corresponding image signal. Additionally, the image signal processed in the control unit **170** is inputted to an external output device through the external device interface unit **135***f*.

[0120] The sound signal processed in the control unit **170** may be outputted to the audio output unit **185** as audio. Moreover, the sound signal processed in the control unit **170** is inputted to an external output device through the external device interface unit **135**.

[0121] Although not shown in FIG. **6**, the control unit **170** may include a demultiplexing unit and an image processing unit. This will be described below with reference to FIG. **10**.

[0122] Besides that, the control unit **170** may control overall operations of the image display device **100**. For example, the control unit **170** controls the turner **131** to tune an RF broadcast corresponding to a channel that a user selects or a pre-stored channel.

[0123] Additionally, the control unit **170** may control the image display device **100** through a user command inputted through the user input interface unit **150** or an internal program, and may access a network to download applications that a user wants or lists of applications into the image display device **100**.

[0124] For example, the control unit **170** controls the tuner **131** to receive a signal of a selected channel according to a predetermined channel selection command received through the user input interface unit **150**, and may process an image, sound, or data signal of the selected channel.

[0125] The control unit **170** may output channel information that a user selects in addition to a processed image or sound signal through the display unit **180** or the audio output unit **185**.

[0126] Moreover, the control unit **170** may output an image or sound signal of an external device such as a camera or a camcorder, which is inputted through the external device interface unit **135**, through the display unit **180** or the audio output unit **185** according to an external device image play command received through the user input interface unit **150**.

[0127] Furthermore, the control unit **170** may control the display unit **180** to display an image, and for example, the control unit **170** may control the display unit **180** to display a broadcast image inputted through the tuner **131**, an external input image inputted through the external device interface unit **135**, an image inputted through a network interface unit, or an image stored in the storage unit **140**. In this case, an image displayed on the display unit **180** may be a still or moving image or a 2D or 3D image.

[0128] Additionally, the control unit **170** may play contents stored in the image display device **100**, received broadcast contents, or external input contents inputted from an external.

The contents may have various formats such as a broadcast image, an external input image, an audio file, a sill image, an accessed web page, and a document file.

[0129] Moreover, although not shown in FIG. **5**, the image display device **100** may further include a channel browsing processing unit for generating a thumbnail image corresponding to a channel signal or an external input signal.

[0130] The channel browsing processing unit receives a stream signal TS outputted from the demodulation unit **132**, or a stream signal outputted from the external device interface unit **135**, and extracts an image from the inputted stream signal to generate a thumbnail image.

[0131] The generated thumbnail image may be inputted to the control unit **170** as it is or after being encoded, or may be inputted to the control unit **170** after being encoded into a stream format.

[0132] The control unit **170** may display a thumbnail list including a plurality of thumbnail images on the display unit **180** by using the inputted thumbnail image. The plurality of thumbnail images in the thumbnail list may be sequentially or simultaneously updated. Accordingly, a user may simply recognize contents of a plurality of broadcast channels.

[0133] The display unit **180** converts an image signal, a data signal, and an OSD signal processed in the control unit **170**, or an image signal and a data signal received in the external device interface unit **135** into R, G, and B signals in order to generate a driving signal.

[0134] For this, the display unit **180** may include a PDP, an LCD, an OLED, a flexible display, and a 3D display, or may include a touch screen used as an input device in addition to an output device.

[0135] The audio output unit **185** receives a signal sound-processed in the control unit **170**, for example, a stereo signal, a 3.1 channel signal, or a 5.1 channel signal, and then, outputs the signal as sound. For this, various types of speakers may be used.

[0136] Moreover, the image display device **100** may further include a capturing unit (not shown) for capturing an image of a user, and image information obtained by the capturing unit (not shown) may be inputted to the control unit **170**.

[0137] In this case, the control unit **170** may detect a user's gesture by combining an image captured through the capturing unit (not shown) and a signal detected through a sensing unit (not shown) or using it separately.

[0138] The power supply unit **190** supplies corresponding power to the image display device **100** generally. For example, the power supply unit **190** may supply power to the control unit **170**, the display unit **180**, and the audio output unit **185**, which may be realized in a form of a System On Chip (SOC).

[0139] For this, the power supply unit **190** may include a converter (not shown) for converting AC power into DC power. If the display unit **180** is implemented using a liquid crystal panel including a plurality of backlight lamps, the power supply unit **190** may further include an inverter (not shown) for PWM operation in order to provide brightness adjustment and dimming driving.

[0140] The remote control device **200** transmits a user input to the user input interface unit **150**. For this, the remote control device **200** may use Bluetooth, Radio Frequency (RF) communication, IR communication, Ultra Wideband (UWB), or ZigBee.

[0141] Additionally, the remote control device **200** receives an image, sound, or data signal outputted from the user input interface unit **150**, and then, displays the received signal or outputs sound or vibration.

[0142] The image display device **100** may be a fixed digital broadcast receiver that receives at least one of an ATSC type (8-VSB type) digital broadcast, a DVB-T type (COFDM type) digital broadcast, and an ISDB-T type (BST-OFDM type) digital broadcast.

[0143] Moreover, since the image display device **100** of FIG. **5** is just one embodiment of the present invention, some components shown herein may be integrated, added, or omitted according to the specification of the actually-realized image display device **100**.

[0144] That is, more than two components may be integrated into one component, or one component may be divided into more than two components, if necessary. Furthermore, a function in each block is used for describing an embodiment of the present invention, and its specific operation or device does not limit the scope of the present invention.

[0145] According to another embodiment of the present invention, unlike FIG. **5**, the image display device **100** may receive an image through the network interface unit **133** or the external device interface unit **135** and may play the received image without the tuner **131** and the demodulation unit **132**

[0146] For example, the image display device **100** may include an image processing device such as a set top box for receiving broadcast signals or contents according to various network services and a contents playing device for playing contents inputted from the image processing device.

[0147] In this case, a method of providing an external device list according to an embodiment may be performed by the above separated image processing device such as a set top box or the above separate contents playing device including the display unit **180** and the audio output unit **185** in addition to the image display device **100** described with reference to FIG. **5**.

[0148] FIG. **6** is a view illustrating a platform structure of an image display device. The platform of the image display device **100** may include OS-based software for performing the above various operations.

[0149] Referring to FIG. **6**A, the platform of the image display device **100** as a separate platform includes a Legacy System platform **400** and a smart system platform **405**, which are separately designed.

[0150] An OS kernel **410** may be commonly used in the Legacy System platform **400** and the smart system platform **405**. The Legacy System platform **400** may include a driver **420**, a Middleware **430**, and an Application **450** on the OS kernel **410**.

[0151] Moreover, the smart system platform **405** may include a Library **435**, a Framework **440**, and an application **455** on the OS kernel **410**.

[0152] The OS kernel **410** as a core of an operating system may provide hardware driver driving when the image display device **100** is driven, the security of hardware and a processor in the image display device **100**, efficient management of a system resource, memory management, an interface for hardware by hardware abstraction, a multi processor, schedule management according to a multi processor, and power management.

[0153] For example, a hardware driver in the OS kernel **410** may include at least one of a display driver, a Wi-Fi driver, a

Bluetooth driver, a USB driver, an audio driver, a power management driver, a binder driver, and a memory driver.

[0154] Moreover, the hardware driver in the OS kernel **410** as a driver for a hardware device in the OS kernel **410** may include a character device driver, a block device driver, and a network device driver.

[0155] Furthermore, the block device driver may include a buffer for storing a unit size as data are transmitted by a specific block unit, and the character device driver may not include the buffer as data are transmitted by a basic data unit, i.e., a character unit.

[0156] The OS kernel **410** may be implemented with various OS based kernels such as Unix base (Linux) kernel and Window base kernel, and may be available for other electronic devices as an open OS.

[0157] The driver **420** is disposed between the OS kernel **410** and the middleware **430**, and drives a device in order for operations of the middleware **430** and the application **450**.

[0158] For example, the driver **420** may include drivers for a micom, a display module, a Graphic Processing Unit (GPU), a Frame Rate Converter (FRC), a General Purpose Input/Output Pin (GPIO), an HDMI, a System Decoder or demultiplexer (SDEC), a Video Decoder (VDEC), an Audio Decoder (ADEC), a Personal Video Recorder (PVR), an Inter-Integrated Circuit (I2C) in the image display device **100**. The above drivers may operate in linkage with a hardware driver in the OS kernel **410**.

[0159] Additionally, the driver **420** may further include a driver for a remote control device **200**, for example, a space remote controller. The driver for a space remote controller may be included in the OS kernel **410** or the middleware **430** in addition to the driver **420**.

[0160] The middleware **430** is disposed between the OS kernel **410** and the application **450**, and serves as a medium to exchange data between other hardware or software. Accordingly, the standardized interface may be available, and various environmental supports and interworking with other tasks having different systems may also be available.

[0161] For example, the middleware **430** in the legacy system platform **400** may include a Multimedia and Hypermedia information coding Experts Group (MHEG) middleware and an Advanced Common Application Platform (ACAP) middleware, and may further include a PSIP or SI middleware (i.e., a broadcast information related middleware), and a DLNA middleware (i.e., a peripheral communication related middleware).

[0162] Additionally, the application **450** on the middleware **430**, i.e., the application **450** in the legacy system platform **400**, may include a User Interface Application for various menus in the image display device **100**.

[0163] The application **450** on the middleware **430** may be edited by a user's choice and may be updated via a network. Through the application **450**, it is possible to enter a wanted menu in various user interfaces according to an input of a remote control device while watching a broadcast image.

[0164] Moreover, the application **450** in the legacy system platform **400** may further include at least one of a TV guide application, a Bluetooth application, a reservation application, a Digital Video Recorder (DVR) application, and a hotkey application.

[0165] Moreover, the library **435** in the smart system platform **405** is disposed between the OS kernel **410** and the framework **440**, and forms a base of the Framework **440**. For example, the library **435** may include a Secure Socket Layer (SSL) (i.e., a security related library), a WebKit (i.e., a web engine related library), a libc (i.e., a c library), and a Media Framework (i.e., a media related library such as video formats and audio formats. The library **435** may be programmed with C or C++, so that it may be exposed to developer through the framework **440**.

[0166] The library **435** may include the runtime **437** having a core java library and a Virtual Machine (VM). The runtime **437** may form a basic of the framework **440** in addition to the library **435**.

[0167] The VM may perform a plurality of instances, i.e., multitasking. Furthermore, according to each application in the application **455**, each VM may be allocated and executed. In this case, a Binder driver (not shown) in the OS kernel **410** may operate for schedule adjustment or interconnect between plurality of instances.

[0168] In addition, the binder driver and the runtime **437** may connect a java-based application with a C-based library. The library **436** and the runtime **437** may correspond to the middleware of the legacy system.

[0169] Moreover, the framework **440** in the smart system platform **405** includes a program, which is a base of an application in the application **455**. The framework **440** is compatible with any application. Its component may be reused, moved, or replaced.

[0170] The framework **440** may include a support program, i.e., a program for binding components of other software. For example, the framework **440** may include a resource manager, an activity manager related to the activity of application, a notification manager, and a content provider for summarizing sharing information between applications.

[0171] The application **455** on the framework **440** includes various programs that are driven in the image display device **100** to be displayed. For example, the application **455** may include a Core Application that has at least one of email, short message service (SMS), calendar, map, and browser.

[0172] Furthermore, the above framework **440** or application **450** may be programmed with JAVA.

[0173] In addition, the application **455** may be divided into an application **460** stored in the image display device **100** and cannot be deleted by a user and an application **475** downloaded via a network and stored and freely installed or deleted by a user.

[0174] Through applications in the application **455**, internet phone service, Video On Demand (VOD) service, web album service, Social Networking Service (SNS), Location Based Service (LBS), map service, web search service, and application search service may be provided. Additionally, various functions such as games and scheduling may be performed.

[0175] Moreover, as shown in FIG. **6**B, the platform of the image display device **100** as an integrated platform may include an OS kernel **510**, a driver **520**, a Middleware **530**, a Framework **540**, and an Application **550**.

[0176] When compared to FIG. **6**A, there are differences that the library **435** is omitted and the application **550** is an integrated layer in the platform shown in FIG. **6**B. Besides that, the driver **520** and the framework **540** are the same as those in FIG. **6**A.

[0177] The platforms shown in FIGS. **6**A and **6**B may be generally available for various electronic devices in addition to the image display device **100**, and may be stored in or loaded into the storage unit **140** or control unit of FIG. **5**, or an additional processor (not shown).

[0178] Moreover, the platform may be stored in or installed into the SI&metadata DB **711**, UI manager **714**, and service manager **713** of FIG. **4**, and may further include an additional application processor (not shown) to execute the application.

[0179] Furthermore, a method of providing an external device list according to an embodiment, which will be described in detail below, may be implemented with a computer executable program.

[0180] FIG. **7** is a view illustrating a method of providing an external device list through a remote control device according to an embodiment.

[0181] As shown in FIG. **7**A, a pointer **205** corresponding to the remote control device **200** is displayed on a display unit **180**.

[0182] A user may move the remote control device **200** up and down and left and right, or may rotate it. The pointer **205** displayed on the display unit **180** of the image display device corresponds to the movement of the remote control device **200**. Since the corresponding pointer **205** moves and is displayed corresponding to the movement on 3D space as shown in the drawing, the remote control device **200** may be called a space remote controller.

[0183] As shown in FIG. **7**B, when a user moves the remote control device **200** to the left, the pointer **205** displayed on the display unit **180** of the image display device moves to the left in correspondence to the movement of the remote control device **200**.

[0184] Information on the movement of the remote control device **200**, which is sensed by a sensor of the remote control device **200**, is transmitted to the image display device. The image display device may calculate the coordinates of the pointer **205** from the information on the movement of the remote control device **200**. The image display device may display the pointer **205** in correspondence to the calculated coordinates.

[0185] FIG. **7**C illustrates the case that a user moves the remote control device **200** away from the display unit **180** while a specific button in the remote control device **200** is pressed. By doing so, a selected area in the display unit **180** corresponding to the pointer **205** may be zoomed in and enlarged.

[0186] On the contrary, when a user moves the remote control device **200** closer to the display unit **180**, a selected area on the display unit **180** corresponding to the pointer **205** may be zoomed out and reduced.

[0187] On the other hand, when the remote control device **200** becomes far from the display unit **180**, a selected area may be zoomed out, and when the remote control device **200** becomes closer to the display unit **180**, a selected area may be zoomed in.

[0188] Moreover, while a specific button in the remote control device **200** is pressed, up/down and left/right movements may be disregarded. That is, when the remote control device **200** becomes closer to or away from the display unit **180**, up/down and left/right movements may be disregarded but only the back and forth movements may be recognized. While a specific button in the remote control device **200** is not pressed, the pointer **205** moves in correspondence to the up/down and left/right movements of the remote control device **200**.

[0189] Moreover, the moving speed or moving direction of the pointer **205** may correspond to that of the remote control device **200**.

[0190] Furthermore, the pointer of this specification means an object displayed on the display unit **180** in correspondence to an operation of the remote control device **200**. Accordingly, besides an arrow shape displayed as the pointer **205** in the drawing, the pointer **205** may have various shapes of objects. For example, the pointer **205** conceptually may include a dot, a cursor, and a thick outline. Moreover, the pointer **205** may be displayed on the display unit **180**, corresponding to a point on the x-axis and the y-axis, and also a plurality of points such as a line and a surface.

[0191] FIG. **8** is a block diagram illustrating a configuration of a remote control device according to an embodiment. The remote control device **200** may include a wireless communication unit **225**, a user input unit **235**, a sensor unit **240**, an output unit **250**, a power supply unit **260**, a storage unit **270**, and a control unit **280**.

[0192] Referring to FIG. **8**, the wireless communication unit **225** transmits/receives a signal to/from an arbitrary one of the image display devices according to the above-mentioned embodiments.

[0193] The remote control device **200** includes an RF module **221** for transmitting/receiving a signal to/from the image display device **100** according to RF communication standards, and an IR module **223** for transmitting/receiving a signal to/from the image display device **100** according to IR communication standards.

[0194] Moreover, the remote control device **200** transmits a signal containing information on the movement thereof to the image display device **100** through the RF module **221**.

[0195] Moreover, the remote control device **200** may receive a signal that the image display device **100** transmits through the RF module **221**, and may transmit commands on power on/off, channel change, and volume change to the image display device **100** through the IR module **223**, if necessary.

[0196] The user input unit **235** may be configured with a keypad, a button, a touch pad, or a touch screen. A user may input commands related to the image display device **100** to the remote control device **200** by manipulating the user input unit **235**. If the user input unit **235** has a hard key button, a user may input commands related to the image display device **100** to the remote control device **200** through a push operation of the hard key button.

[0197] If the user input unit **235** has a touch screen, a user may input commands related to the image display device **100** to the remote control device **200** by touching a soft key of the touch screen. Moreover, the user input unit **235** may include various kinds of input means that a user manipulates such as a scroll key and a jog key, and this embodiment does not limit the scope of the present invention.

[0198] The sensor unit **240** may include a gyro sensor **241** or an acceleration sensor **243**. The gyro sensor **241** may sense information on the movement of the remote control device **200**.

[0199] For example, the gyro sensor **241** may sense information on the operation of the remote control device **200** on the bases of x, y, and z axes and the acceleration sensor **243** may sense information on the moving speed of the remote control device **200**. Furthermore, the remote control device **200** may further include a distance measurement sensor that senses the distance between the remote control device **200** and the display unit **180** of the image display device **100**.

[0200] The output unit **250** may output an image or sound signal corresponding to the manipulation of the user input

unit **235** or a signal transmitted from the image display device **100**. A user may recognize the manipulation of the user input unit **235** or the control of the image display device **100** through the output unit **250**.

[0201] For example, the output unit **250** may include an LED module that is turned on/off, a vibration module **253** that vibrates, a sound outputting module **255** that outputs sound, or a display module **257** that outputs an image, when the user input unit **235** is manipulated or a signal is transmitted to or received from the image display device **100** through the wireless communication unit **225**.

[0202] Moreover, the power supply unit **260** supplies power to the remote control device **200**, and stops supplying power to the remote control device **200** when the remote control device **200** does not move for a predetermined time, so that power waste may be reduced. The power supply unit **260** may restart to supply power after a predetermined key in the remote control device **200** is manipulated.

[0203] The storage unit **270** may store various kinds of programs and application data necessary for controls or operations of the remote control device **200**. If the remote control device **200** wirelessly transmits and receives a signal through the image display device **100** and the RF module **221**, the remote control device **200** and the image display device **100** may transmit/receive a signal in a predetermined frequency band.

[0204] The control unit **280** of the remote control device **200** may store in the storage unit **270** information on a frequency band for wirelessly transmitting/receiving a signal to/from the image display device **100** paired with the remote control device **200**, and may refer to the stored information.

[0205] The control unit **280** controls general matters related to a control of the remote control device **200**. The control unit **280** may transmit to the image display device **100** a signal corresponding to a predetermined key manipulation of the user input unit **235** or a signal corresponding to the movement of the remote control device **200** sensed by the sensing unit **240** through the wireless communication unit **225**.

[0206] FIG. **9** is a view illustrating a configuration of a home screen displayed on an image display device according to an embodiment.

[0207] The configuration of the home screen shown in FIG. **9** may be an example of a basic screen of the image display device **100**. Such a screen may be set with an initial screen when power is on or starting from a standby mode, or a basic screen by an operation of a home key equipped in the remote control device **200**.

[0208] Referring to FIG. **9**, the home screen **600** may include a card object region. The card object region may include a plurality of card objects **610**, **620**, and **630**, which are classified by the sources of contents.

[0209] A card object BROADCAST **610** for displaying a broadcast image, a card object NETCAST **620** for displaying a CP list, and a card object APP STORE for displaying a list of applications provided are shown in the drawing.

[0210] Moreover, as a card object that is not displayed on the display unit **180** and is disposed on a hidden area **601** but is replaced and displayed when a card object is moved, a card object CHANNEL BROWSER **640** for displaying a thumbnail list of broadcast channels, a card object TV GUIDE **650** for displaying a broadcast guide list, a card object RESERVATION/REC **660** for displaying a reservation list, a card object MY MEDIA **670** for displaying a media list of a device disposed in or connected to the image display device, and a card object TV GUIDE**2** **680** for displaying a broadcast guide list may be shown in the drawing.

[0211] The card object BROADCAT **610** for displaying a broadcast image may include a broadcast image **615** received through the tuner **110** or the network interface unit **130**, an object **612** for displaying corresponding broadcast image related information, an object **617** for displaying an external device, and a setup object **618**.

[0212] Since the broadcast image **615** is displayed as a card object and its size is fixed by a locking function, a user may continuously watch a broadcast image.

[0213] The broadcast image **615** may have a size that is changed by the manipulation of a user. For example, the size of the corresponding broadcast image **615** may be enlarged or reduced by drag using the pointer **205** of the remote control device **200**. By such an enlargement or reduction, the number of card objects displayed on the display unit **180** may be two or four instead of three in the drawing.

[0214] Moreover, when the broadcast image **615** in the card object is selected, it may be displayed on the display unit **180** in a full screen.

[0215] The object **612** for displaying corresponding broadcast image related information may include a channel number DTV7-1, a channel name YBC HD, a broadcast program title Oh! Lady, and a broadcast time pm 08:0008:50. By doing so, a user may intuitively recognize information on the broadcast image **615**.

[0216] When the object **612** for displaying corresponding broadcast image related information is selected, related EPG information may be displayed on the display unit **180**.

[0217] Moreover, an object **602** for displaying a date 03.24, a day of the week THU, and a current time pm 08:13 may be displayed on the card object **610** for displaying a broadcast image. By doing so, a user may intuitively recognize time information.

[0218] An object **617** for displaying an external device may display an external device connected to the image display device **100**. For example, when the object **617** for displaying an external device is selected, a list of external devices connected to the image display device **100** may be displayed.

[0219] The setup object **618** may be used for inputting various settings of the image display device **100**. For example, various settings such as image setting, audio setting, screen setting, reservation setting, pointing setting of the remote control device **200**, and network setting may be made.

[0220] Moreover, the card object **620** for displaying a CP list may include a card object title NETCAST **622** and a CP list **625**. In the drawing, Yakoo, Metflix, weather.com, Picason, and My tube are shown as CPs in the CP list **625**, but various settings are possible.

[0221] When the card object title **622** is selected, the corresponding card object **620** may be displayed on the display unit **180** in a full screen.

[0222] Moreover, when a predetermined CP in the CP list **625** is selected, a screen including a contents list that a corresponding CP provides may be displayed on the display unit **180**.

[0223] The card object **630** for displaying a list of applications provided may include the card object title APP STORE **632** and the application list **635**. The application list **635** may be a list, which is aligned being classified by each item in an application store. In the drawing, the list may be displayed being aligned in a popular order HOT and the latest order

NEW, but the present invention is not limited thereto. That is, various examples are available.

[0224] When the card object title **632** is selected, the corresponding card object **630** may be displayed on the display unit **180** in a full screen.

[0225] Moreover, when a predetermined application item in the application list **635** is selected, a screen for providing information on a corresponding application may be displayed on the display unit **180**.

[0226] A login item **627**, a help item **628**, and an exit item **629** may be displayed on the card objects **620** and **630**.

[0227] The login item **627** may be used for accessing an application store or logging in a network connected to an image display device. The help item **628** may be used for the help during an operation of the image display device **100**. The exit item **629** may be used for exiting from a corresponding home screen. At this point, a broadcast image being received may be displayed in a full screen.

[0228] An object for displaying the number of entire card objects may be displayed below the card objects **620** and **630**. The object may display the number of entire card objects, of course, the number of card objects among the entire card objects displayed on the display unit **180**.

[0229] Moreover, the card object **640** for displaying a thumbnail list of a broadcast channel may include a card object title CHANNEL BROWSER **642** and a thumbnail list **645** of a broadcast channel. Broadcast channels received sequentially are displayed as thumbnail images in the drawing, but the present invention is not limited thereto. That is, a video is possible. The thumbnail list may include a thumbnail image and channel information on a corresponding channel. By doing so, a user may intuitively recognize content of a corresponding channel.

[0230] Such a thumbnail image may be a thumbnail image on a preference channel that a user registers in advance or a thumbnail image on a channel after or before the broadcast image **615** in the card object **610**. Moreover, eight thumbnail images are shown in the drawing, but various settings are possible. Additionally, a thumbnail image in a thumbnail list may be updated.

[0231] When the card object title **642** is selected, the corresponding card object **640** may be displayed on the display unit **180** in a full screen. That is, content on a thumbnail list may be displayed on the display unit **180**.

[0232] Moreover, when a predetermined thumbnail image in the thumbnail list **645** of a broadcast channel is selected, a broadcast image corresponding to a corresponding thumbnail image may be displayed on the display unit **180**.

[0233] The card object **650** for displaying a broadcast guide list may include a card object title TV GUIDE **652** and a broadcast guide list **655**. The broadcast guide list **655** may be a list for broadcast programs or broadcast images of other channels after the broadcast image **615** in the card object **610**, but the present invention is not limited thereto. That is, various examples are available.

[0234] Additionally, when the card object title **652** is selected, the corresponding card object **650** may be displayed on the display unit **180** in a full screen.

[0235] Moreover, when a predetermined broadcast item in the broadcast guide list **655** is selected, a broadcast image corresponding to a corresponding broadcast item may be displayed on the display unit **180**, or broadcast information corresponding to a corresponding broadcast item may be displayed on the display unit **180**.

[0236] The card object **660** for displaying a broadcast reservation list or a recording list may include a card object title RESERVATION/REC **662** and a broadcast reservation list or recording list **665**. The broadcast reservation list or recording list **665** may be a list including broadcast items that a user reserves in advance or broadcast items recorded according thereto. In the drawing, a thumbnail image is displayed by each corresponding item, but various examples are available.

[0237] Additionally, when the card object title **662** is selected, the corresponding card object **660** may be displayed on the display unit **180** in a full screen.

[0238] Furthermore, a broadcast item set in advance for reservation or a broadcast item recorded in the broadcast reservation list or recording list **665** is selected, broadcast information on a corresponding broadcast or a recorded broadcast image may be displayed on the display unit **180**.

[0239] The card object **670** for displaying a media list may include a card object title MY MEDIA **672** and a media list **675**. The media list **675** may be a list of media stored in the image display device **100** or stored in a device connected to thereto. Video, still images, and audio are shown as an example in the drawing, but besides that, various examples such as text documents and e-book documents are available.

[0240] Additionally, when the card object title **672** is selected, the corresponding card object **670** may be displayed on the display unit **180** in a full screen.

[0241] Moreover, when a predetermined media item in the media list **675** is selected, a screen corresponding to a corresponding media may be displayed on the display unit **180**.

[0242] The card object TV GUIDE **680** for displaying a broadcast guide list may include a card object title TV GUIDE **682** and a broadcast guide list **685**. The broadcast guide list **685** may be a guide list for each broadcast type. A list for each broadcast type is shown in the drawing by classifying broadcasts into entertainments such as drama, news, or sports, but various settings are available. That is, the broadcast guide list may be a list for each type such as drama, movie, news, sports, and animation. By doing so, a user may confirm a guide list that classifies broadcasts into each genre

[0243] When the card object title **682** is selected, the corresponding card object **680** may be displayed on the display unit **180** in a full screen.

[0244] Moreover, when a predetermined broadcast item in the broadcast guide list **685** is selected, a screen corresponding to a corresponding broadcast image may be displayed on the display unit **180**.

[0245] The card objects **620** and **630** displayed on the display unit **180** and the card objects **640**, **650**, **660**, **670**, and **680** disposed on the hidden area **601** and not displayed on the display unit **180** may be interchangeable by an input for moving a card object.

[0246] That is, at least one of the card objects **620** and **630** displayed on the display unit **180** may be moved on the hidden area **601**, and at least one of the card objects **640**, **650**, **660**, **670**, and **680** disposed on the hidden area **601** may be displayed on the display unit **180**.

[0247] Furthermore, the home screen **600** of the image display device **100** may further include a card object for displaying information on software upgrade.

[0248] Hereinafter, referring to FIGS. **10** to **16**, a method of providing an external device list according to a first embodiment will be described. FIG. **10** is a flowchart illustrating the method of providing an external device list according to the first embodiment. FIGS. **11** to **16** are views illustrating a

screen that provides an external device list of an image display device according to the first embodiment.

[0249] Referring to FIGS. **10** to **16**, first, the control unit **170** displays a plurality of external device icons, which allows external devices to be connected to the image display device **100**, on the display unit **180** of the image display device **100** in operation S**700**. Here, a plurality of external devices as external devices connected to the image display device **100** via a wired/wireless network may include a Digital Versatile Disc (DVD) player, a DVD recorder, a Blu-ray Disc (BD) player, a set top box, a digital TV, a personal computer (PC), a camera, a camcorder, an HDD player, and a memory card. However, they are just examples of external devices. Thus, a device having a built-in recording medium for recording a file may serve as an external device.

[0250] As shown in FIG. **11**, a plurality of external device icons **820** representing a plurality of external devices are displayed on the full screen **810** of the display unit **180**. Moreover, the control unit **170** determines which external device icons **820** are connected to the image display device **100** in order to display specific symbols **830***a*, **830***b*, and **830***c* on the external device icons that are being connected to the image display device **100**. Therefore, external device icons that are not being connected to the image display device **100** are distinguished. Here, displaying a specific symbol on an external device icon is used as one example of a method of distinguishing icons from each other, but the present invention is not limited thereto. That is, any one of letters, symbols, colors, and flashing lights may be used for distinction.

[0251] The control unit **170** determines which one of the plurality of external device icons displayed on the display unit **180** has a pointer thereon in operation S**710**.

[0252] As shown in FIG. **12**, when the pointer **850** is positioned on the first external device icon **840** among the plurality of external device icons **820**, the control unit **170** may display an image signal **860**, which is inputted from an external device related the first external device icon **840** (for example, a BD player), on the full screen **810** of the image display device **100** in operation S**720**. Through this, a user could confirm an image signal in advance, which is inputted from an external device before switching the input of the external device, so that the user's convenience may be improved.

[0253] Moreover, when the pointer **850** is positioned on the first external device icon **840** among the plurality of external device icons **820**, the first external device icon **840** having the pointer **850** thereon may be highlighted.

[0254] Moreover, as shown in FIG. **13**, an image signal **860** of an external device related to the first external device icon **840** having the pointer **850** thereon may be displayed on the area where the first external device icon **840** is displayed.

[0255] Moreover, as shown in FIG. **14**, when the pointer **850** is positioned on the first external device icon **840**, a predetermined popup window **861** is displayed on an area adjacent to the first external device icon **840**, and an image signal **860** of an external device related to the first external device icon **840** may be displayed on the popup window **861**.

[0256] As shown in FIG. **15**, when the pointer **850** is positioned on one of the plurality of external device icons **820** (for example, the second external device icon **841** representing a PC), the control unit **170** displays the image signal **860**, which inputted from an external device (for example, the PC) related to the first external device icon **840** having the pointer **850** thereon, on the full screen **810** of the image display device. In this state, when an input is received to select the second external device icon **841** in operation S**730**, as shown in FIG. **16**, a popup window **870** that asks whether to select an input switch to a PC (i.e., a second external device) is displayed on the full screen of the image display device **100**.

[0257] Then, if the input switch to the external device is selected through the popup window **870**, the input is switched to the PC (i.e., the second external device) in operation S**740**.

[0258] Accordingly, as shown in FIG. **17**, an image signal **880** of the PC (i.e., the selected second external device) is displayed on the full screen **810** of the image display device **100**.

[0259] Furthermore, the remote control device **200** that controls the image display device **100** may control the input-switched external device. This will be described in more detail.

[0260] The remote control device **200** transmits a control command for controlling an external device to the input-switched external device through the image display device **100** in operation S**750**. In response to the transmitted control command, a control command result of the external device is displayed on the full screen **810** of the image display device **100**.

[0261] For example, as shown in FIG. **17**, while the image signal **880** of the second external device is displayed on the display unit **180**, in case that a control command of the remote control device **200** is transmitted to a corresponding external device, the pointer **850** displayed on the image signal **880** of the second external device may be manipulated in response to the control command.

[0262] By doing so, the remote control device **200** that controls the image display device **100** may identically control the input-switched external device, so that the user's convenience may be improved.

[0263] According to embodiments, since an image signal inputted from an external device is provided in advance before input switching, ease of use and service efficiency may be improved.

[0264] The method of providing an external device list according to the present invention may be programmed to be executed in a computer and may be stored on a computer readable recording medium. Examples of the computer readable recording medium include read-only memory (ROM), random-access memory (RAM), CD-ROMs, magnetic tapes, floppy disks, and optical data storage devices.

[0265] The computer readable recording medium can also be distributed over network coupled computer systems so that the computer readable code is stored and executed in a distributed fashion. Also, functional programs, codes, and code segments for accomplishing the present invention can be easily construed by programmers skilled in the art to which the present invention pertains.

[0266] Moreover, although the preferred embodiments of the present invention are described above, the present invention is not limited the above-mentioned specific embodiments. It will be understood by those skilled in the art that various changes in forms and details may be made therein without departing from the spirit and scope of the invention. Also, these modified embodiments should be understood without departing from the technical scope or prospect of the present invention.

1. A method of providing an external device list to an image display device, comprising:

displaying a plurality of external device icons connectible to the image display device;

positioning a pointer on a first external device icon among the plurality of external device icons; and

displaying on a screen of the image display device an image signal of an external device corresponding to the first external device icon having the pointer thereon.

2. The method according to claim **1**, wherein the first external device icon having the pointer thereon is highlighted.

3. The method according to claim **1**, further comprising:

determining whether an external device corresponding to each of the plurality of external device icons is connected to the image display device; and

distinctively displaying an icon corresponding to an external device connected to the image display device and an icon corresponding to an external device not connected to the image display device among the plurality of external device icons.

4. The method according to claim **1**, wherein an image signal of an external device corresponding to the first external device icon having the pointer thereon is displayed on a full screen of the image display device.

5. The method according to claim **1**, wherein an image signal of an external device corresponding to the first external device icon having the pointer thereon is displayed on an area where the first external device icon is displayed.

6. The method according to claim **1**, wherein an image signal of an external device corresponding to the first external device icon having the pointer thereon is displayed through a popup window adjacent to the first external device icon.

7. The method according to claim **1**, further comprising:

selecting one of the plurality of external device icons; and

switching to an external device corresponding to the selected icon.

8. The method according to claim **7**, further comprising:

transmitting a control command for controlling the switched external device to the external device through the image display device; and

displaying an execution result of the control command on the external device in response to the control command.

9. An image display device comprising:

a display unit displaying a plurality of external device icons connectible to the image display device; and

a control unit performing a control to display an image signal of an external device corresponding to a first external device icon having a pointer thereon when the pointer is positioned on the first external device icon among the plurality of external device icons.

10. The image display device according to claim **9**, wherein the control unit highlights the first external device icon having the pointer thereon.

11. The image display device according to claim **9**, wherein the control unit determines whether an external device corresponding to each of the plurality of external device icons is connected to the image display device, in order to distinctively display an icon corresponding to an external device connected to the image display device, and an icon corresponding to an external device not connected to the image display device among the plurality of external device icons.

12. The image display device according to claim **9**, wherein the control unit displays an image signal of an external device corresponding to the first external device icon having the pointer thereon on a full screen of the image display device.

13. The image display device according to claim **9**, wherein the control unit displays an image signal of an external device corresponding to the first external device icon having the pointer thereon on an area where the first external device icon is displayed.

14. The image display device according to claim **9**, wherein the control unit displays an image signal of an external device corresponding to the first external device icon having the pointer thereon through a popup window adjacent to the first external device icon.

15. The image display device according to claim **9**, wherein, when one of the plurality of external device icons is selected, the control unit switches to an external device corresponding to the selected icon.

16. The image display device according to claim **15**, wherein the control unit transmits a control command for controlling the switched external device to the external device, and displays an execution result of the control command on the external device in response to the control command on the display unit.

17. A computer readable recording medium recording a program that executes the method according to claim **1** in a computer.

* * * * *