IN THE UNITED STATES DISTRICT COURT
FOR THE WESTERN DISTRICT OF TEXAS
AUSTIN DIVISION

NETWORK SYSTEM TECHNOLOGIES, LLC,	)	
	)	
Plaintiff,	)	
	)	
v.	)	Civil Action No. 1:22-cv-1331
	)	
QUALCOMM INCORPORATED;	)	
QUALCOMM TECHNOLOGIES, INC.;	)	
ARTERIS, INC.,	)	
	)	
Defendants.	)	
	)	

DEFENDANTS' JOINT OPENING CLAIM CONSTRUCTION BRIEF

TABLE OF CONTENTS

I. Introduction 1

II. Legal Standards 2

A. Claim Construction 2

B. Indefiniteness 4

C. Means-Plus-Function Terms 4

III. Agreed Upon Claim Constructions 5

IV. Disputed Claim Terms 6

A. Common Term – "connection" ('818, '449, '052, '9893, '800 Patents) 6

B. '818 Patent Term – "dropping means (DM) for dropping data exchanged by said first and second module (M, S) / a first dropping means (DM) for dropping data / said dropping means (DM)" 11

C. '449 Patent Terms 16

1. "resource manager determining whether a target connection with the desired connection properties is available" 16

2. "communication manager" 18

D. '052 Patent Term – "interconnect means" 22

E. '9893 Patent Term – "arranging . . . the first and second information comprising said issued message as a single address" 24

F. '2893 Patent Terms 25

1. "each data package comprising N data elements" 25

2. "data package" 30

3. "data storage elements" 30

G. '800 Patent Terms 32

1. "optimal amount of data" 32

2. "optimal moment for sending the data in said first wrapper or said second wrapper" 35

3. "according to communication properties of the communication between the master and the slave, wherein the communication properties include ordering of data transport, flow control including when a remote buffer is reserved for a connection, then a data producer will be allowed to send data only when it is guaranteed that space is available for the produced data at the remote buffer, throughput where a lower bound on throughput is guaranteed, latency where an upper bound for latency is guaranteed, lossiness including dropping of data, transmission termination, transaction completion, data correctness, priority, and data delivery" 38

4. "first determination unit" / "second determination unit" 40

5. "said first wrapper" / "said second wrapper" 43

6. "wrapper" 45

TABLE OF AUTHORITIES

Cases

Akamai Techs., Inc. v. MediaPointe, Inc.,
No. 2:22-cv-06233-MCS (AFMx), 2023 U.S. Dist. LEXIS 117167, at *19-20
(C.D. Cal. July 7, 2023) 34, 37

Apple Inc. v. Samsung Electronics Co., Ltd.,
695 F.3d 1370 (Fed. Cir. 2012) 26

Ariad Pharms., Inc. v. Eli Lilly & Co.,
598 F.3d 1336 (Fed. Cir. 2010) 15

Aylus Networks, Inc. v. Apple Inc.,
856 F.3d 1353 (Fed. Cir. 2017) 16

BASF Agro B.V. v. Makhteshim Agan of N. Am., Inc.,
519 Fed. Appx. 1008 (Fed. Cir. Mar. 20, 2013) 18

Bell Atl. Network Servs. v. Covad Communs. Group,
262 F.3d 1258 (Fed. Cir. 2001) 10

Bicon, Inc. v. Straumann Co.,
441 F.3d 945 (Fed. Cir. 2006) 26

Blackboard, Inc. v. Desire2Learn, Inc.,
574 F.3d 1371 (Fed. Cir. 2009) 13

Boss Control, Inc. v. Bombardier Inc.,
410 F.3d 1372 (Fed. Cir. 2005) 7

CCS Fitness, Inc. v. Brunswick Corp.,
288 F.3d 1359 (Fed. Cir. 2002) 2

Clare v. Chrysler Grp., LLC,
819 F.3d 1323 (Fed. Cir. 2016) 11

Diebold Nixdorf, Inc. v. ITC,
899 F.3d 1291 (Fed. Cir. 2018) 14, 41

Eon-Net LP v. Flagstar Bancorp,
653 F.3d 1314 (Fed. Cir. 2011) 10

ePlus, Inc. v. Lawson Software, Inc.,
700 F.3d 509 (Fed. Cir. 2012) 4

Fiber, LLC v. Ciena Corp.,
792 Fed. Appx. 789 (Fed. Cir. 2019) 14

Gen. Electric Co. v. Wabash Co.,
304 U.S. 364 (1938) 15

GPNE Corp. v. Apple Inc.,
830 F.3d 1365 (Fed. Cir. 2016) 11

Halliburton Energy Servs. v. M-I LLC,
514 F.3d 1244 (Fed. Cir. 2008) 43

Intel Corp. v. Qualcomm Inc.,
21 F.4th 784 (Fed. Cir. 2021) 10

Intellectual Ventures I LLC v. T-Mobile USA, Inc.,
902 F.3d 1372 (Fed. Cir. 2018) 32

Interactive Gift Express, Inc. v. Compuserve Inc.,
256 F.3d 1323 (Fed. Cir. 2001) 3

Interval Licensing LLC v. AOL, Inc.,
766 F.3d 1364 (Fed. Cir. 2014) 32

K-2 Corp. v. Salomon S.A.,
191 F.3d 1356 (Fed. Cir. 1999) 2

Kyocera Senco Indus. Tools, Inc. v. ITC,
22 F.4th 1369 (Fed. Cir. 2022) 7

Mangosoft, Inc. Oracle Corp.,
No. 02-545-SM, 2004 U.S. Dist. LEXIS 19357 (D.N.H. Sep. 21, 2004) 26

Markem-Imaje Corp. v. Zipher Ltd.,
No. 07-cv-00006-PB, 2012 U.S. Dist. LEXIS 112502, *25-26
(D.N.H. Aug. 9, 2012) 16

Markman v. Westview Instruments, Inc.,
517 U.S. 370 (1996) 2

Mass. Inst. of Tech. v. Abacus Software,
462 F.3d 1344 (Fed. Cir. 2006) 19

Maurice Mitchell Innovations, L.P. v. Intel Corp.,
249 Fed. Appx 184 (Fed. Cir. 2007) 15

Medicines Co. v. Mylan, Inc.,
853 F.3d 1296 (Fed. Cir. 2017) 15

MTD Prods. Inc. v. Iancu,
933 F.3d 1336 (Fed. Cir. 2019) 5

Nautilus Inc. v. Biosig Instruments, Inc.,
572 U.S. 898 (2014) 4, 24, 32

Noah Sys. Inc. v. Intuit Inc.,
675 F.3d 1302 (Fed. Cir. 2012) 14

Optimum Processing Sols. V. Advanced Micro Devices,
Civil Action No. 1:09-CV-1098-TCB, 2012 U.S. Dist. LEXIS 203463, at *39-40
(N.D. Ga. July 10, 2012) 35

Optimum Processing Solutions LLC v. Advanced Micro Devices, Inc.,
No. 1:09-cv-1098-TCB, 2012 U.S. Dist. LEXIS 203463, *67-69
(N.D. Ga. July 10, 2012) 14, 15

Phillips v. AWH Corp.,
415 F.3d 1303 (Fed. Cir. 2005) 3, 8, 29

Quanergy Sys. v. Velodyne Lidar USA, Inc.,
24 F.4th 1406, 1415-16 (Fed. Cir. 2022) 11

Regeneron Pharm., Inc. v. Merus N.V.,
864 F.3d 1343 (Fed. Cir. 2017) 24

Spectrum Int'l, Inc. v. Sterilite Corp.,
164 F.3d 1372 (Fed. Cir. 1998) 18

Superior Fireplace Co. v. Majestic Prods. Co.,
270 F.3d 1358 (Fed. Cir. 2001) 24

Synchronoss Techs., Inc. v. Dropbox Inc.,
No. 16-cv-00119, 2017 U.S. Dist. LEXIS 201981, at *30-33
(N.D. Cal. Dec. 7, 2017) 19

Team Worldwide Corp. v. Intex Rec. Corp.,
No. 2020-1975, 2021 U.S. App. LEXIS 27284, at *19 (Fed. Cir. 2021) 14

Trs. Of Columbia Univ. v. Symantec Corp.,
811 F.3d 1359 (Fed. Cir. 2016) 11

TVnGO Ltd. (BVI) v. LG Elecs. Inc.,
861 Fed. Appx. 453 (Fed. Cir. 2021) 25

Twin Peaks Software Inc. v. IBM Corp.,
690 Fed. Appx. 656 (Fed. Cir. May 26, 2017) 5

U.S. Surgical Corp. v. Ethicon, Inc.,
103 F.3d 1554 (Fed. Cir. 1997) 2

Vitronics Corp. v. Conceptronic, Inc.,
90 F.3d 1576 (Fed. Cir. 1996) 3, 4

Welker Bearing Co. v. PHD, Inc.,
550 F.3d 1090 (Fed. Cir. 2008) 18

Williamson v. Citrix Online, LLC,
792 F.3d 1339 (Fed. Cir. 2015) 5, 18, 20, 41

WSOU Investments LLC v. Google LLC,
Appeal No. 2022-1064, 2023 U.S. App. LEXIS 26584 at *11-12
(Fed. Cir. Oct. 6, 2023) 19, 41

WSOU Investments LLC v. Google LLC,
Appeal No. 2022-1066, 2023 U.S. App. LEXIS 25255 at *13-19
(Fed. Cir. Sept. 25, 2023) 13, 15, 41

Statutes

35 U.S.C. § 112 ..... 4, 18

I. INTRODUCTION

Modern electronic equipment (e.g., computers and cellphones) contains very complex integrated circuits having a variety of modules (such as processors and memories) formed on a single chip. Networks-on-chip ("NoCs") are one category of technology that can be used to facilitate communication between these modules.

Plaintiff Network System Technologies, LLC ("NST") asserts that Defendants Qualcomm Incorporated and Qualcomm Technologies, Inc. (collectively "Qualcomm") and Arteris, Inc. ("Arteris") infringe six patents on NoC technology.[1] The Asserted Patents disclose and claim specific aspects of one implementation of one type of NoC. At the time these patents were filed, NoC technology was not new. Among the companies engaged in development of NoC technology at that time was Koninklijke Philips Electronics NV ("Philips"), the original owner of the Asserted Patents. As a result, these patents are directed to design and implementation decisions that were made by Philips for its "Æthereal NoC" that was designed for specific use cases. Those use cases were far different from the advanced, low-power uses cases in the markets in which Qualcomm sells its products.[2] The specific design choices that Philips made for its products are reflected in the language used in the claims of the Asserted Patents. NST's attempt to either avoid construction or to construe claim terms in a way that is much broader than is supported by the claims, specifications and prosecution histories of the Asserted Patents should be rejected.

---

[1] The patents-in-suit are U.S. Patent Nos. 7,366,818 ("the '818 patent"), 7,373,449 ("the '449 patent), 7,594,052 ("the '052 patent), 7,769,893 ("the '9893 patent), 8,072,893 ("the '2893 patent), 8,086,800 ("the '800 patent") (collectively, the "Asserted Patents" or "patents-in-suit"). Copies of the Asserted Patents are submitted herewith as Exhibits 2-7.

[2] Arteris does not sell integrated circuit products, but rather markets software tools used to facilitate NoC design.

Many claims asserted by NST in this case are also fatally flawed and invalid as a matter of claim construction. Perhaps the most egregious example is NST's improper functional claiming. The Patent Act permits a patentee to recite claim elements functionally rather than structurally—so-called "means plus function" claiming—but only if the specification discloses specific structure that is clearly linked to performing the recited function. The claim limitation is then construed to cover the disclosed structure and equivalents thereof, as opposed to any means that perform the recited function. Three of the six Asserted Patents use improper functional claiming without the specification describing any structure that provides this function. A second example is the use of terms that are incomprehensible and/or do not include objective boundaries, such as "optimal amount." These flaws render the patents invalid as indefinite.

II. LEGAL STANDARDS

A. Claim Construction

The meaning of terms used in a patent claim is a question of law. *Markman v. Westview Instruments, Inc.*, 517 U.S. 370, 391 (1996). The purpose of claim construction is to resolve the "disputed meanings and technical scope [of the claims], to clarify and when necessary to explain what the patentee covered by the claims, for use in the determination of infringement." *U.S. Surgical Corp. v. Ethicon, Inc.*, 103 F.3d 1554, 1568 (Fed. Cir. 1997). Claim construction is not an exercise in rewriting claims, but rather an opportunity to "give effect to the terms chosen by the patentee." *K-2 Corp. v. Salomon S.A.*, 191 F.3d 1356, 1364 (Fed. Cir. 1999). The Court, not the jury, must construe the claims. *Markman*, 517 U.S. at 372.

"Claim interpretation begins with an examination of the intrinsic evidence, i.e., the claims, the rest of the specification and, if in evidence, the prosecution history." *CCS Fitness, Inc. v. Brunswick Corp.*, 288 F.3d 1359, 1366 (Fed. Cir. 2002). Intrinsic evidence "is the most

significant source of the legally operative meaning of disputed claim language." *Vitronics Corp. v. Conceptronic, Inc.*, 90 F.3d 1576, 1582 (Fed. Cir. 1996).

"[T]he words of a claim are generally given their ordinary and customary meaning." *Phillips v. AWH Corp.*, 415 F.3d 1303, 1312 (Fed. Cir. 2005) (en banc) (internal quotation marks omitted). The ordinary and customary meaning is "the meaning that the term would have to a person of ordinary skill in the art in question at the time of the invention…." *Id.* at 1313.

Claims "are part of a fully integrated written instrument consisting principally of a specification that concludes with the claims" and "must be read in view of the specification, of which they are a part." *Id.* at 1315. Accordingly, the specification "is always highly relevant to the claim construction analysis. Usually, it is dispositive; it is the single best guide to the meaning of a disputed term." *Id.* Courts look "to the specification to ascertain the meaning of the claim term as it is used by the inventor in the context of the entirety of his invention, and not merely to limit a claim term." *Interactive Gift Express, Inc. v. Compuserve Inc.*, 256 F.3d 1323, 1332 (Fed. Cir. 2001). Therefore, "[p]roperly viewed, the 'ordinary meaning' of a claim term is its meaning to the ordinary artisan after reading the entire patent." *Phillips*, 415 F.3d at 1321.

"Like the specification, the prosecution history provides evidence of how the [patent office] and the inventor understood the patent." *Phillips*, 415 F.3d at 1317. The prosecution history "can often inform the meaning of the claim language by demonstrating how the inventor understood the invention and whether the inventor limited the invention in the course of prosecution, making the claim scope narrower than it would otherwise be." *Id.*

The Court may also consult "extrinsic evidence," which is "all evidence external to the patent and prosecution history, including expert and inventor testimony, dictionaries, and learned treatises." *Phillips*, 415 F.3d at 1317. Extrinsic evidence "can shed useful light on the relevant

art," but it is "less significant than the intrinsic record in determining the legally operative meaning" of the claims. *Id.* It is improper to rely on extrinsic evidence when "an analysis of the intrinsic evidence alone will resolve any ambiguity in a disputed claim term." *Vitronics*, 90 F.3d at 1583.

B. Indefiniteness

"[I]ndefiniteness is a question of law and in effect part of claim construction." *ePlus, Inc. v. Lawson Software, Inc.*, 700 F.3d 509, 517 (Fed. Cir. 2012). Patent claims must particularly point out and distinctly claim the subject matter regarded as the invention. 35 U.S.C. § 112, ¶ 2. A claim, when viewed in light of the intrinsic evidence, must "inform those skilled in the art about the scope of the invention with reasonable certainty." *Nautilus Inc. v. Biosig Instruments, Inc.*, 572 U.S. 898, 910 (2014). If it does not, the claim fails § 112, ¶ 2 and is therefore invalid as indefinite. *Id.* at 901. Whether a claim is indefinite is determined from the perspective of one of ordinary skill in the art as of the time the application was filed. *Id.* at 911.

C. Means-Plus-Function Terms

35 U.S.C. § 112, ¶ 6 authorizes a patentee to recite a claim element as a means for performing a function without reciting the structure that performs the function in the claim. In that instance, the claim is construed to cover "the corresponding structure . . . described in the specification and equivalents thereof." 35 U.S.C. § 112, ¶ 6 (2010).[3] "Construing a means-plus-function claim term is a two-step process. The court must first identify the claimed function. Then, the court must determine what structure, if any, disclosed in the specification corresponds

[3] The 2011 America Invents Act (AIA) renumbered Section 112, ¶ 6 to 112(f). The Asserted Patents predate the effective date of the AIA, so Defendants refer to the pre-AIA section numbering.

to the claimed function." *Williamson v. Citrix Online, LLC*, 792 F.3d 1339, 1351 (Fed. Cir. 2015) (*en banc*).

When a claim uses the word "means" in conjunction with a function, § 112, ¶ 6 presumptively applies. *Id.* at 1347–49. Conversely, § 112, ¶ 6 presumptively does not apply to a functional claim limitation that does not use the word "means," but that presumption is overcome when the limitation "fails to recite sufficiently definite structure or else recites [a] function without reciting sufficiently definite structure for performing that function." *Id.* at 1348 (internal quotation marks omitted). "One way to demonstrate that a claim limitation fails to recite sufficiently definite structure is to show that, although not employing the word 'means,' the claim limitation uses similar 'nonce words that can operate as a substitute for 'means'" such as "'module,' 'mechanism,' 'element,' and 'device'." *MTD Prods. Inc. v. Iancu*, 933 F.3d 1336, 1341 (Fed. Cir. 2019).

The *quid pro quo* for functional claiming under § 112, ¶ 6 is that the specification must disclose at least one structure for performing the claimed function, and either the specification or prosecution history must "clearly link or associate" that structure to the function. *Twin Peaks Software Inc. v. IBM Corp.*, 690 Fed. Appx. 656, 664 (Fed. Cir. May 26, 2017); *Rain Computing, Inc. v. Samsung Elecs. Am., Inc.*, 989 F.3d 1002, 1007 (Fed. Cir. 2021). If the specification does not disclose such a structure, then the claim is invalid as indefinite. *Id.*

III. AGREED UPON CLAIM CONSTRUCTIONS

The parties agree that the following claim terms should be construed as follows.

Patent	Claim	Term	Agreed Construction
'818 '449 '052 '9893 '2893	1 10 6 4 10	Preamble	The preamble is limiting.

’800	12		
’449 ’052 ’9893	10 6 4	“connection properties”	“properties of a connection, including ordering (data transport in order), flow control (a remote buffer is reserved for a connection, and a data producer will be allowed to send data only when it is guaranteed that space is available for the produced data), throughput (a lower bound on throughput is guaranteed), latency (upper bound for latency is guaranteed), the lossiness (dropping of data), transmission termination, transaction completion, data correctness, priority, or data delivery”
’449 ’9893 ’800	13 8 12	“flow control”	“controlling flow whereby a remote buffer is reserved for a connection, and a data producer will be allowed to send data only when it is guaranteed that space is available for the produced data”
’449	11	“at least one of a switch and a router”	“at least one switch and at least one router”
’449	10	“independently configurable”	“Able to be configured with connection properties that do not depend on those of another configuration.”
’818 ’449 ’9,893 ’2,893 ’800	1-2 10-12 14 4, 11 12	“network”	“Multi-hop interconnection between modules separated by one or more network nodes”
’818 ’449 ’052 ’9,893 ’2,893 ’800	1-3, 5-7 10 6 4 10 12	“integrated circuit”	“Interconnected circuitry on a chip”

IV. DISPUTED CLAIM TERMS[4]

A. Common Term – “connection” (’818, ’449, ’052, ’9893, ’800 Patents)

Defendants’ Proposed Construction	Plaintiff’s Proposed Construction
“one or more channels, each having a set of connection properties, between a first module and at least one second module, that are created before use and closed after use”	“one or more communication channels”

[4] NST is asserting one independent claim from each of the Asserted Patents (’818 patent, claim 1; ’449 patent, claim 10; ’052 patent, claim 6; ’9893 patent, claim 4; ’2893 patent, claim 10; ’800 patent, claim 12) in addition to some dependent claims. Each disputed term appears in the asserted independent claim of the relevant patent.

The parties agree that the Court should construe the claim term "connection" in light of the specifications of the patents-in-suit. Neither party is arguing the correct construction is the "plain and ordinary meaning" divorced from the specifications. This is because the specifications are very clear that "connection" has a particular meaning in the context of the alleged invention. First, the specifications define what a "connection" "is" and what it "must" do:

> At the transport layer of said network, the communication between modules are performed over connections. **A connection is considered as a set of channels, each having a set of connection properties, between a first module and at least one second module.**
>
> * * * *
>
> The **connections according to the embodiments of the invention must be first created or established** with the desired properties before being used. . . . **After usage, connections are closed**, which leads to freeing the resources occupied by that connection.

'818 patent at 6:34-38, 10:25-34 (emphasis added); *see also* '449 patent at 8:48-52, 10:62-11:3; '052 patent at 4:50-55, 5:44-49; '800 patent at 5:13-18; '9893 patent at 4:54-58; 10:34-42.[5] When the specification uses words that indicate a particular definition of a claim term, that definition applies as a matter of lexicography. *See, e.g.*, *Kyocera Senco Indus. Tools, Inc. v. ITC*, 22 F.4th 1369, 1379 (Fed. Cir. 2022) (finding lexicography based on the statement "This bottom position is also sometimes referred to herein as the 'driven position'"); *Boss Control, Inc. v. Bombardier Inc*., 410 F.3d 1372 (Fed. Cir. 2005) (finding lexicography applied to the term "interrupt" based on specification statement regarding how the interrupt of the invention operated). Defendants' proposed construction properly reflects these definitional statements: a

[5] This is not a case where the patents-in-suit all contain a common specification; the specifications of the five patents at issue for this term are all distinctly different. Despite their differences, however, the underlined portion of the first passage above appears verbatim in all five patents, while the second passage appears verbatim in three of the patents, with a substantively identical statement in a fourth.

"connection" is one or more channels (*i.e.*, "a set of channels"), each having a set of connection properties, between a first module and at least one second module, that are created before use (*i.e.*, "must be first created or established . . . before being used") and closed after use (*i.e.*, "after usage, connections are closed").

In addition to lexicography, these statements in the specifications also reflect the meaning the term "connection" would have to the ordinary artisan after reading the entire patent. *Phillips*, 415 F.3d at 1321 ("Properly viewed, the 'ordinary meaning' of a claim term is its meaning to the ordinary artisan after reading the entire patent."). In computer networking, communications are often referred to as either "connection-oriented" or "connectionless". Hassoun Decl. at ¶¶45-54. A 1996 computer networking textbook by Tanenbaum describes this distinction, using the analogies of communicating via a telephone or via the mail:

> **Connection-oriented service** is modeled after the telephone system. To talk to someone, you pick up the phone, dial the number, talk, and then hang up. Similarly, to use a connection-oriented network service, the service user first establishes a connection, uses the connection, and then releases the connection.
>
> * * *
>
> In contrast, **connectionless service** is modeled after the postal system. Each message (letter) carries the full destination address, and each one is routed through the system independent of all the others.

Ex. 8 at 23 (emphasis in original); *see also* Ex. 9 (The Authoritative Dictionary of IEEE Standard Terms, 7th Ed.) at 220-221. A person of ordinary skill in the art ("POSITA") would understand that the Asserted Patents use "connection" in this sense of the phone analogy discussed in Tanenbaum, where a connection is an end-to-end channel (i.e., between modules) that needs to be created between the sender and the receiver before it is used. Hassoun Decl. at ¶¶45-54.

In addition to the specification language quoted above stating that connections according to the "invention" must first be "created or established" and "[a]fter usage" "are closed," the patents repeatedly describe "connections" being created, used, and then closed. *Id.*, ¶51. The '449 patent

in particular is replete with such descriptions. The Summary of the Invention of the '449 patent describes how modules of the allegedly-novel integrated circuit communicate, starting with a module issuing a "***request*** for a connection" and culminating in a connection between modules being "***established*** based on the available properties or available network resource . . . ." '449 patent at 7:40-42, 7:51-55 (emphasis added). The Summary goes on to say that a connection is "opened or not" depending on the availability of resources. *Id.* at 7:56-65. Other parts of the '449 patent provide further examples (all emphasis added):

- "[T]he resource manager RM sets the connection properties, and ***establishes a connection*** with accepted properties between said initiator and target modules. After said two modules I, T have performed the transactions as requested by the initiator module, the communication manager CM issues a request to said resource manager RM to ***reset the connection*** or the connection properties." '449 patent at 10:55-61;

- "To avoid input buffer overflow ***connections can be used***. At ***connection set up*** between a master and one or more slaves, buffer space is allocated at the network interfaces of the slaves . . . ." *Id.* at 6:63-7:1;

- "A connection ***could be opened as follows***: [describing steps for opening connection]." *Id.* at 16:32-45;

- "[A] plurality of modules ***requests [] a connection*** with specific properties between two modules, ***decides if said requested connection*** with said properties between said two modules ***is possible***, responds the connection with available properties, ***establishes a connection*** with said properties between said two modules, and ***performs transactions*** between said two modules." *Id.* at 16:53-60.

The other patents contain similar discussions. *See, e.g.*, '052 patent at 5:49-51 ("Different connections are ***created and closed*** independently . . ."); 6:4-6 ("Once a connection has been ***created***, the master initiates the transactions by means of requests which zero or more slaves execute . . ."); 6:30-32 ("The network interfaces NI are responsible . . . for ***implementing the connections*** and services . . ."); '9893 patent at 9:56-60 ("Connections can be ***configured*** independently."), 10:20-23 ("Connections are introduced to describe and identify communication with different properties . . ."); '800 patent at 6:56-58 ("the optimal burst length may be

determined dynamically (1) every time a connection is ***set up*** . . .") (all emphasis added). The specifications' consistent use of "connections" including these concepts confirm the Court's construction should include these concepts. *Bell Atl. Network Servs. v. Covad Communs. Group*, 262 F.3d 1258, 1271-73 (Fed. Cir. 2001) (determining construction by reference to the specification's repeated and consistent use of the term); *Eon-Net LP v. Flagstar Bancorp*, 653 F.3d 1314, 1321-23 (Fed. Cir. 2011) (same); *Intel Corp. v. Qualcomm Inc.*, 21 F.4th 784, 792-93 (Fed. Cir. 2021) (same).

The patents also expressly adopt the terminology of "connection based" and "connection oriented" communication that, as discussed above, existed at the time the patents were filed. For example, the '052 patent discusses <u>and claims</u> the step of "enabling a ***connection based communication***." '052 patent at Abstract, 3:51-54, 10:21-22; *see also* '449 patent, 15:66-16:1 ("To fully utilize the NoC capabilities, such as high bandwidth and transaction concurrency, ***connection-oriented communications*** are provided."); '9893 patent at 9:54-56 (same). This further reinforces that the patents are using "connections" in the manner known in the art to describe communication channels between modules that are created before use and closed after use. Hassoun Decl. at ¶¶50-52, 54.

NST's proposed construction departs from the common meaning reflected in the specifications, proposing that a connection is nothing more than "one or more communication channels." By doing so, NST seeks to untether this term from the actual invention disclosed in the patents. NST's proposed construction requires nothing more than a wire, and therefore NST could argue that all NoCs communicate over "connections." The patents are clear, however, that "connection" is nowhere near this broad. As shown in the quotes above, the patents explain that communications "may" or "can" be performed over connections, or they may not. *See* '052

patent at 4:50-52; '800 patent at 5:13-15; '449 patent at 6:63-65; '818 patent at 4:66-67. The patents also explain that certain aspects of the invention can be used in systems that ***do not use*** connections. '818 patent at 11:28-31 ("In another alternative embodiment of the invention, the transaction completion can be implemented in systems ***which are not connection based***"); '052 patent at 8:47-51 ("[T]he above described mapping is relevant for communication protocols ***which do not include the notion of connection***"). These excerpts are non-sensical under NST's proposed construction and dispel the notion that a connection can simply be a channel. Hassoun Decl. at ¶¶53-54. NST's argument that "connections" effectively encompasses every electrical communication ignores the disclosures of its patents and should be rejected. *See, e.g.*, *Quanergy Sys. v. Velodyne Lidar USA, Inc.*, 24 F.4th 1406, 1415-16 (Fed. Cir. 2022) ("Because [the proposed] broader construction is inconsistent with the specification, we find it to be unreasonable.").

Claim terms must be construed consistent with their usage in the specification. *See, e.g.*, *Trs. Of Columbia Univ. v. Symantec Corp.*, 811 F.3d 1359, 1364 (Fed. Cir. 2016); *GPNE Corp. v. Apple Inc.*, 830 F.3d 1365, 1370 (Fed. Cir. 2016); *Clare v. Chrysler Grp., LLC*, 819 F.3d 1323, 1330 (Fed. Cir. 2016). Here, the patents use definitional language to describe a "connection" as an end-to-end (module-to-module) communication channel that must be created before use and closed after use, and consistently and repeatedly use the term consistent with that definition. Therefore, Defendants' proposed construction should be adopted.

B. '818 Patent Term – "dropping means (DM) for dropping data exchanged by said first and second module (M, S) / a first dropping means (DM) for dropping data / said dropping means (DM)"

Defendants' Proposed Construction	Plaintiff's Proposed Construction
"dropping means" subject to Section 112 ¶ 6.	"dropping means" means "circuit configured to drop messages," the remaining language

Function (claim 1): "dropping data exchanged by said first and second module (M, S)" Function (claim 3): claim 1 function + "creating an error message if data is dropped" Function (claim 5): claim 3 function + "sending said error message to said first module (M)" Structure: Indefinite (no structure disclosed)	should be afforded their plain and ordinary meaning (not subject to Section 112 ¶ 6). If the Court holds that Section 112 ¶ 6 applies, NST proposes the following construction: Function (claim 1): "drop data exchanged by said first and second module" Function (claim 3): claim 1 function + "create an error message if data is dropped" Function (claim 5): claim 3 function + "send said error message to said first module" Structure: "circuit"

Claim 1 of the '818 patent recites a "dropping means (DM) for dropping data exchanged by said first and second module (M, S)" and a "first means for dropping data." Because both terms recite "means," they are presumptively means-plus-function limitations governed by 35 U.S.C. § 112, ¶ 6. *Supra*, §II(B). That presumption is overcome only when the limitation further includes the structure, material or acts necessary to perform the recited function. *Id.* Claim 1 of the '818 patent recites no structure for these dropping functions. Hassoun Decl. at ¶58. Therefore, the presumption that § 112, ¶ 6 applies cannot be overcome.[6]

Step one in construing a means-plus-function claim limitation is to identify the recited function. *Supra*, § II(B). Here, the parties are essentially in agreement[7] that the recited function for means-plus function construction of claim 1 is: "for dropping data exchanged by said first

[6] Were the Court to find otherwise, NST's construction should still be rejected because claim 1 recites the function as "dropping data," not "dropping messages" as set forth in NST's proposed construction. Further, the dropping means need not be circuit; rather, the dropping functions can be implemented as software or firmware operated by general purpose hardware in the integrated circuit. Hassoun Decl. at ¶63.

[7] NST identifies the same function, differing only in the grammatical form for the verb.

and second module (M, S)," and the recited function includes "creating an error message if data is dropped" for claim 3 and "sending said error message to said first module (M)" for claim 5.

Step two in construing a means-plus-function claim limitation is to identify the structure disclosed in the specification that is clearly linked to performance of the recited function. The '818 patent fails in this regard. Despite the specification repeatedly reciting the dropping *function*, the specification never discloses a structure to perform that function. For example, in Figure 2 below, network interfaces ANIP and PNIP each comprise "a dropping manager (DM)". '818 patent at 7:45-48, FIG. 2.

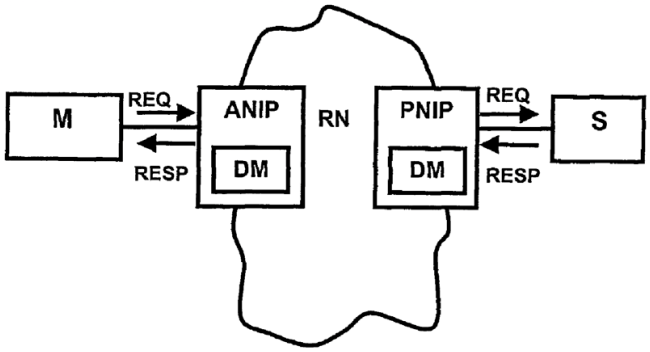

FIG.2

However, as shown in the figure, the "DM" box is nothing more than a "black box" devoid of any structure. The specification never describes what is inside the "DM" black box. Hassoun Decl. at ¶¶59-62. Because the specification fails to adequately disclose any structure corresponding to the claimed "dropping means," the claim should be held invalid as indefinite. *Supra* § II(B); *see also WSOU Investments LLC v. Google LLC*, Appeal No. 2022-1066, 2023 U.S. App. LEXIS 25255 at *13-19 (Fed. Cir. Sept. 25, 2023) (in a computer-related invention, affirming invalidity for failure to disclose structure); *Blackboard, Inc. v. Desire2Learn, Inc.*, 574 F.3d 1371, 1382-83, (Fed. Cir. 2009) (same, stating: "[W]hat the patent calls the 'access control manager' is simply an abstraction that describes the function of controlling access to course

materials . . . The ACM is essentially a black box that performs a recited function. But how it does so is left undisclosed."); *Noah Sys. Inc. v. Intuit Inc.*, 675 F.3d 1302, 1319 (Fed. Cir. 2012) (affirming a district court finding of invalidity for claims directed to "access means" for failure to disclose structure); *Optimum Processing Solutions LLC v. Advanced Micro Devices, Inc.*, No. 1:09-cv-1098-TCB, 2012 U.S. Dist. LEXIS 203463, *67-69 (N.D. Ga. July 10, 2012) (finding that the disclosed "processor selection logic" was functionally a black box that failed to disclose how it performed the recited function); *Fiber, LLC v. Ciena Corp.*, 792 Fed. Appx. 789, 796 (Fed. Cir. 2019) (rejecting argument based on expert testimony that a POSITA would understand a claimed "control" referred to "circuitry and a drive mechanism" because these structures were not disclosed in the specification and "[e]xpert testimony cannot create structure where none is adequately disclosed in the specification.").

NST's position is that if Section 112, ¶ 6 applies, the structure associated with the recited function is a "circuit." This is incorrect for at least two reasons. One, the specification does not clearly link the recited functions to any "circuit." Hassoun Decl. at ¶¶62-63; *Diebold Nixdorf, Inc. v. ITC*, 899 F.3d 1291, 1303 (Fed. Cir. 2018) ("Structure disclosed in the specification qualifies as 'corresponding structure' if the intrinsic evidence clearly links or associates that structure to the function recited in the claim."); *Team Worldwide Corp. v. Intex Rec. Corp.*, No. 2020-1975, 2021 U.S. App. LEXIS 27284, at *19 (Fed. Cir. 2021) (holding structure insufficient where not tied to claimed function). In fact, the word "circuit" does not appear anywhere in the Description of the Preferred Embodiments section of the patent. Rather, as discussed above, the '818 patent only links the recited dropping functions to the black box labeled "DM" in Fig. 2. Two, even though the patent title and claim preamble refer to "integrated circuit," such a general description is still insufficient to comply with the statute. *See Maurice Mitchell Innovations, L.P.*

v. Intel Corp., 249 Fed. Appx 184, 188 (Fed. Cir. 2007) (affirming finding of indefiniteness, stating: "[T]he mere mention of a complicated integrated circuit, comprised of hundreds if not thousands of circuits, is much too broad to sufficiently indicate the precise 'means for causing' structure to a [POSITA.]"); *WSOU Investments*, 2023 U.S. App. LEXIS 25255 at *14-19 (agreeing with district court that a patent's disclosure of a "communication engine" on a "common chip" was insufficient structure); *Optimum Processing*, 2012 U.S. Dist. LEXIS 203463 at *67-69 ("processor selection logic" on a chip held to be insufficient structure); Hassoun Decl. at ¶63.

The '818 patent states that the alleged invention is "based on the idea to allow the dropping of data in certain cases." '818 patent at 5:35-36. But the claims themselves do not recite the "certain cases" in which dropping occurs, much less identify the structure used to drop data in those cases. If the Court adopts NST's proposed identification of the corresponding structure as nothing more than a "circuit," it will facilitate NST's argument that it is entitled to cover any circuit with a communication network that drops data, regardless of when, how, or why it does so. That is the very definition of improper functional claiming at the point of novelty that has been repeatedly rejected. *See Gen. Electric Co. v. Wabash Co.*, 304 U.S. 364, 371 (1938) (condemning the "vice of functional claiming" by using "conveniently functional language at the exact point of novelty"); *Ariad Pharms., Inc. v. Eli Lilly & Co.*, 598 F.3d 1336, 1353 (Fed. Cir. 2010) (improper to "recite a description of the problem to be solved while claiming all solutions to it"); *Medicines Co. v. Mylan, Inc.*, 853 F.3d 1296, 1306-07 (Fed. Cir. 2017) ("[F]unctional limitations . . . cannot be 'so broad that [they] cause[] the claim to have a potential scope of protection beyond that which is justified by the specification disclosure.'"); *Markem-Imaje Corp. v. Zipher Ltd.*, No. 07-cv-00006-PB, 2012 U.S. Dist. LEXIS 112502, *25-26 (D.N.H. Aug. 9,

2012) (holding claims invalid as indefinite because "one of ordinary skill in the art, confronted by the unbounded functional claiming at issue, would not apprehend what additional structure was being claimed to enable the controller to accomplish the recited functions"). Claims 1, 3 and 5 of the '818 patent should be held invalid as indefinite.

C. '449 Patent Terms

1. "resource manager determining whether a target connection with the desired connection properties is available"

Defendants' Proposed Construction	Plaintiff's Proposed Construction
"resource manager determining whether a connection between modules with desired properties is available to be opened and is not an arbiter prioritizing which port of a switching device is to be utilized."	"Resource manager" means "circuit that manages network resources," and the remaining language should be afforded their plain and ordinary meanings.

Prosecution history disclaimer is "a fundamental precept" of claim construction that prevents a patent owner from having claims "construed one way in order to obtain their allowance and in a different way against accused infringers." *Aylus Networks, Inc. v. Apple Inc.*, 856 F.3d 1353, 1359-60 (Fed. Cir. 2017). When the patentee "unequivocally and unambiguously disavows a certain meaning to obtain a patent, the doctrine of prosecution history disclaimer narrows the meaning of the claim consistent with the scope of the claim surrendered." *Id.* That is what happened here. During prosecution of the '449 patent, the claims were rejected in view of a prior art "Emerson" reference. Ex. 10 at Office Action p. 2-6. The Examiner pointed to the arbiter of a switching device in Emerson (which Emerson called "module 102") as constituting the claimed "resource manager." *Id.*; Hassoun Decl. at ¶¶66-72. In response, the applicants stated:

> The Office Action asserts that Emerson has a communication manager which is a multi-core module 102 and also has a resource manager which is arbiter 112. The Arbiter 112 of Emerson is a device for prioritizing which port 120 of the module 102 is to be utilized:
>
> > [0026] If the address received at a port matches that of the module for that bus, access to multiplexer 122 and the memory space of FIFO 126 and SRAM 130 is arbitrated by arbiter 132. **Arbiter 132 arbitrates which port has use of multiplexer 122 and of the memory space at a given time. The arbitration protocol may be any protocol suitable for the system, including rotation of the priority among the ports or assigning specific ports a priority over others, or a combination of both**. It is preferred that any given arbitration cycle prioritizes ports 120 so that if the port with the highest priority does not have any current requests, the port with the next highest priority will be serviced. (Emerson par. 0026)(emphasis added).
>
> The Arbiter 112 of Emerson does not disclose or suggest the features of claim 1 which include the resource manager determining whether the at least one connection with the communication channels is available <u>based on the connection properties being available</u> and the features of claim 7 which include the first module issuing a request for a connection with the second module to a communication manager, the resource manager determining whether a target connection <u>with the desired connection properties is available</u>, and the resource manager responding with the availability of the target connection to the communication manager.

Ex. 11 at 6-7. Thus, the applicants clearly and unequivocally stated that an arbiter in a switching device that "prioritiz[es] which port of the module is to be utilized" is ***not*** a resource manager that "determine[es] whether a target connection with the desired connection properties is available," as claimed.

The applicants' disclaimer was not only clear and unequivocal; it was successful. In response to this statement, the Examiner allowed the claims, stating that the prior art "do[es] not teach wherein the resource manager determines whether the at least one connection with the communication channels is available based on the connection properties being available." Ex.

12 at Notice of Allowability p. 2. Particularly having convinced the USPTO that the claim was allowable because it did not cover this type of arbiter, the applicant cannot now attempt to recapture that disclaimed claim scope in litigation. *Spectrum Int'l, Inc. v. Sterilite Corp.*, 164 F.3d 1372, 1378-79 (Fed. Cir. 1998) (finding disclaimer based on applicant's characterization of prior art, stating: "Indeed, by distinguishing the claimed invention over the prior art, an applicant is indicating what the claims do not cover."); *BASF Agro B.V. v. Makhteshim Agan of N. Am., Inc.*, 519 Fed. Appx. 1008, 1016-1017 (Fed. Cir. Mar. 20, 2013) (same).

2. "communication manager"

Defendants' Proposed Construction	Plaintiff's Proposed Construction
Subject to Section 112 ¶ 6. Function: "receiving a request for a connection from the first module, forwarding the request to a resource manager, and receiving the availability of the target connection from the resource manager" Structure: Indefinite (insufficient structure disclosed)	"communication manager" means "circuit that manages communication between modules" (not subject to Section 112 ¶ 6) If the Court holds that Section 112 ¶ 6 applies, NST proposes the following construction: Function: "forward a request for a connection to the resource manager" Structure: "circuit"

The rebuttable presumption that 35 U.S.C. § 112, ¶ 6 does not apply to a functional claim limitation that does not use "means" is overcome when "the claim term fails to 'recite sufficiently definite structure' or else recites 'function without reciting sufficient structure for performing that function.'" *Supra*, § II(B). That is the case with "communication manager." As with terms such as "module," "mechanism" and "device," the term "manager" does not "have a sufficiently definite meaning as the name for structure." *Williamson,* 792 F.3d at 1349-51 (Fed. Cir. 2015) (*en banc*); *see also Welker Bearing Co. v. PHD, Inc.*, 550 F.3d 1090, 1096 (Fed. Cir. 2008) ("This court noted that the generic terms 'mechanism,' 'means,' 'element,' and 'device,'

typically do not connote sufficiently definite structure [to avoid means-plus-function treatment]"). Indeed, "manager" merely means "something that manages." *Synchronoss Techs., Inc. v. Dropbox Inc.*, No. 16-cv-00119, 2017 U.S. Dist. LEXIS 201981, at *30-33 (N.D. Cal. Dec. 7, 2017) (finding "synchronization manager" to be a means-plus-function term because manager is a "generic descriptor[] for software or hardware that perform[s] a specified function, or manage[s] something"). A POSITA would not have understood the term "manager" to impart structure capable of performing either party's proposed function. Hassoun Decl. at ¶75.

The lack of structure in the term "manager" is evidenced by the patent itself, which uses "communication manager" and "communication managing means" interchangeably. The patent initially introduces the communication manager as a "***communication managing means CM*** for managing the communication between different modules." '449 patent at 7:34-37. Throughout the remainder of the patent, the patentee referred to "communication managing means CM" and "communication manager CM" largely interchangeably. *Compare e.g.* '449 patent at 7:41-43,7:50-51, 8:1-2 (referring to "communication managing means CM") *with e.g.* '449 patent at 7:66-67, 10:1-5 (referring to "communication manager CM"). The Federal Circuit has confirmed that using a term in the claim synonymously with "means" in the specification supports finding the term subject to Section 112, ¶ 6. *Mass. Inst. of Tech. v. Abacus Software*, 462 F.3d 1344, 1353-54 (Fed. Cir. 2006) ("colorant selection mechanism" governed by § 112, ¶ 6 in part because the specification also referred to a "colorant selection means"); *WSOU Investments LLC v. Google LLC*, Appeal No. 2022-1064, 2023 U.S. App. LEXIS 26584 at *11-12 (Fed. Cir. Oct. 6, 2023) ("collaborative application management processor" governed by § 112, ¶ 6 in part because the specification described a "collaborative application management means").

Because "manager" imparts no structure, its modifier – "communication" – must do so in order "to take the overall claim limitation out of the ambit of § 112, para. 6." *Williamson*, 792 F.3d at 1351. It does not. "Communication" simply refers to the function of communicating, without imparting structure. Hassoun Decl. at ¶75. Accordingly, the term "communication manager" connotes no specific structure and should be interpreted as a means-plus-function limitation under § 112, ¶ 6.

The functions of the "communication manager" are provided in the claim language: "the first module issuing a request for a connection with the second module to a communication manager" (i.e., receiving a request for a connection from the first module), "forwarding the request to a resource manager," and "the resource manager responding with the availability of the target connection to the communication manager" (i.e., receiving the availability of the target connection from the resource manager). '449 patent at claim 10.

However, the specification discloses no structure for performing any of these functions. Hassoun Decl. at ¶¶76-79. Instead, the specification introduces "communication manager" only by its location (in the router network or in one or more of the network interfaces). *See* '449 patent at 10:1-6. Thereafter, what the patent calls the "communication manager" is simply treated as an abstraction that describes the functions recited in claim 10, which are performed by yet another undefined "black box":

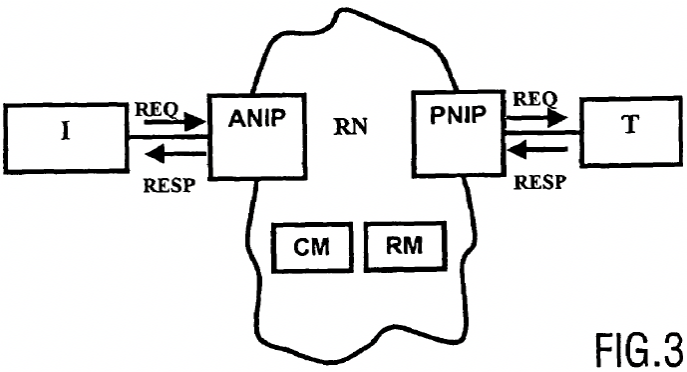

FIG.3

See '449 patent at 10:19-24, 41-54, Fig. 3 (black box labeled "CM"). As discussed above in relation to "dropping means," linking the claimed function to nothing more than a black box abstraction is insufficient to comply with § 112, ¶ 6. *See supra*, § IV(B) and the cases cited therein. Thus, "communication manager" is a mean-plus-function term for which the patentee was required – but failed – to disclose sufficient corresponding structure in the specification, rendering term indefinite.

NST takes the position that to the extent Section 112, ¶ 6 applies, the function is "forward a request for a connection to the resource manager." This is incorrect because it is only one of the three functions recited in claim 10 for the communication manager. NST also again takes the position that the structure associated with the recited function is a "circuit." This is incorrect for the same reasons discussed above with respect to "dropping means." *Supra*, § IV(B). The specification describes no circuit for implementing the "communication manager" functions. '449 patent at 10:19-24 and 41-54. In fact, the word "circuit" does not appear in the relevant portions of the specification. *Id.* NST cannot overcome the '449 patent's failure to disclose even one exemplary circuit that manages communications by instead asserting that it is entitled to cover any circuit that performs that function. *Supra*, § IV(B). The mere fact that the title of the patent refers to an "integrated circuit" is not sufficient. *Id.* The Court should find claim 10 of the '449 patent indefinite and therefore invalid.

Even if "communications manager" were not means plus function, NST's construction should be rejected, as it merely improperly reverses the two words of the term, and adds "between modules." Moreover, the communications manager need not be a "circuit" as proposed by NST. The functions identified by the parties can be implemented as software or firmware operated by general purpose hardware in the integrated circuit. Hassoun Decl. at ¶81.

D. '052 Patent Term – "interconnect means"

Defendants' Proposed Construction	Plaintiff's Proposed Construction
Subject to Section 112 ¶ 6. Function: coupling said plurality of processing modules (M, S). Structure: bus, switch, point-to-point wire, or network.	"Multi-hop interconnection between modules separated by one or more network nodes." NST disagrees that this term is governed by 35 U.S.C. 112, ¶ 6, but offers the following backup position if the Court holds that it is so governed: Function "coupling said plurality of processing modules (M, S)." Structure: "circuit"

Claim 6 of the '052 patent recites: "coupling said plurality of processing modules (M,S) by an interconnect means (N)." Because the limitation uses the word "means," § 112, ¶ 6 presumptively applies. *Supra*, § II(B). Further, claim 6 of the '052 patent recites "interconnect means" in conjunction with purely functional language with respect to the "coupling" function ("coupling said plurality of processing modules (M,S)"). There is no structure recited for the interconnect means to perform the claimed coupling function (nor does any other language in claim 6), which means the presumption that § 112, ¶ 6 applies cannot be overcome. Therefore, § 112, ¶ 6 applies, with the function being that which is recited in claim 6: "coupling said plurality of processing modules (M,S)." If the Court finds the term is subject to § 112, ¶ 6, NST does not dispute that this is the recited function.

As for the structure disclosed for performing the function of "coupling said plurality of processing modules (M,S)," NST again argues that if § 112, ¶ 6 applies, the corresponding structure is simply "circuit." That is incorrect. Nowhere does the '052 patent specification link the claimed function to a "circuit." Instead, the specification clearly links the function of coupling processing modules to busses, switches, point-to-point wires and networks (all emphasis added):

- "In conventional processing systems the systems ***modules usually communicate to each other*** via ***a bus***. '052 patent at 1:25-27.

- "[I]n contrast to ***existing on-chip interconnects*** (e.g., ***buses***, ***switches***, or ***point-to-point wires***), where the communicating ***modules are directly connected***, in a ***NoC the modules communicate remotely via network nodes***." '052 patent at 1:50-54.

- "Introducing ***networks as on-chip interconnects*** radically changes the communication when compared to ***direct interconnects***, such as ***buses or switches***." '052 patent at 2:31-33.

- "This is in contrast with the ***prevalent existing interconnects (i.e., buses)*** where ***modules are directly connected***." '052 patent at 2:36-38.

- "The ***interconnect*** is embodied as ***a network on chip NOC***, allowing communication between all aforementioned modules. The network on chip may include ***wires, bus, time-division multiplexing, switches, and/or routers within a network***." '052 patent at 4:46-50.

Moreover, the '052 specification discloses that each module M, S is connected to network via its associated network interface NI:

- "Each module M, S is connected to a network N via its associated network interface NI, respectively, i.e. the network interfaces NI are used as interfaces between the master and slave modules M, S and the network N." '052 patent at 5:12-15.

Therefore, taking all these disclosures together, and excluding the network interface NI which is separately claimed in claim 6, the structures that are clearly linked to performing the function of "coupling said plurality of processing modules (M,S)" are: bus, switch, point-to-point wire, or network. Hassoun Decl. at ¶¶84-86.

Finally, even if this term were not means-plus-function, the Court should reject NST's proposed construction. First, NST's proposed construction of "interconnect means" is not a construction, as it includes "interconnection." Second, NST's proposed construction is identical to the parties' agreed construction for "network." As discussed above, however, the specification of the '052 patent repeatedly uses "interconnect" to refer to structures other than networks. *See* '052 patent at 1:50-54; 2:31-34; 2:36-38. Because the patentee chose to use the term

"interconnect means" in the claims rather than "network," NST cannot artificially narrow the claims by excluding all other disclosed alternatives through claim construction.

E. '9893 Patent Term – "arranging . . . the first and second information comprising said issued message as a single address"

Defendants' Proposed Construction	Plaintiff's Proposed Construction
Indefinite.	"Arranging … the first and second information comprised in said issued message as a single address"

First, NST's proposed construction is incorrect because it changes the meaning of the claim term. Specifically, the claim recites "the first and second information ***comprising said issued message*** as a single request." In patent law, it is well understood that "comprising" means the same thing an "including." *E.g. Regeneron Pharm., Inc. v. Merus N.V.*, 864 F.3d 1343, 1352 (Fed. Cir. 2017). Therefore, this claim term states that "the first and second information" include the "issued message." By changing "comprising" to "comprised in" in its proposed construction, NST attempts to rewrite this claim term such that the opposite is true, i.e. the issued message includes the first and second information. A party cannot change the claims of its patents through claim construction unless there is a "clerical or typographical mistake" which is "clearly evident from the specification, drawings, and prosecution history." *E.g.*, *Superior Fireplace Co. v. Majestic Prods. Co.*, 270 F.3d 1358, 1376 (Fed. Cir. 2001). Such is not the case here.

Second, this claim term is indefinite regardless. As discussed above in Section II.B., a patent claim is invalid if it fails to "inform those skilled in the art about the scope of the invention with reasonable certainty." *Nautilus Inc.* 572 U.S. at 910. Here, A POSITA would not know what the patent means by "arranging" two pieces of information into "a single address." Hassoun Decl. at ¶87. A POSITA would not know what type of data manipulation (if any) was required for "arranging" two pieces of information into a single address. *Id*. They also would not

know what the boundaries of "single address" were. *Id*. Moreover, the patents provide no information to help clarify the meaning of either of these terms. *Id*. at ¶¶88-90. Instead, the specification provides inconsistent and ambiguous uses of the word "arranging" that would further confuse a POSA regarding the scope of the claim. *Id*. at ¶¶88-90.

The public is entitled to notice regarding what conduct is and is not prohibited by a patent. *TVnGO Ltd. (BVI) v. LG Elecs. Inc.*, 861 Fed. Appx. 453, 457 (Fed. Cir. 2021). Because a POSITA could not determine with reasonable certainty what it means to "arrange" two pieces of information into "a single address," claim 6 of the '9893 patent should be held indefinite. *Id.* at 457-58, 460.

F. '2893 Patent Terms

1. "each data package comprising N data elements"

Defendants' Proposed Construction	Plaintiff's Proposed Construction
"every data package communicated by the network stations has a fixed size of N data elements"	NST incorporates its definition for the term "data package," "data elements" are groups of data, and the remaining language should be afforded their plain and ordinary meanings.

Claim 10 of the '2893 patent is directed to a method of designing a data communication network for communicating data packages between functional blocks, "each data package comprising N data elements." The issue for this claim term is whether, as set forth in Defendants' proposed construction, this language requires that every data package communicated by the network stations has the same number of data elements. Defendants' construction is mandated by both the claim language and the specification. Indeed, the invention described in the '2893 patent makes no sense and would not operate as intended unless Defendants' construction is adopted. Hassoun Decl. at ¶93.

The contested claim term is "each data package comprising N data elements." The phrase "each data package" in this term refers to the "data packages" recited earlier in the claim that are communicated by the data communication network through network stations:

> a ***data communication network*** comprising a plurality of network stations being interconnected via a plurality of communication channels for communicating ***data packages*** between functional blocks

'2893 patent, claim 10 (emphasis added). In the contested term, "each" modifies "data package" to refer back to *every* data package communicated by the data communication network and its network stations. Courts often construe "each" to mean "every" in similar situations. *See, e.g.*, *Apple Inc. v. Samsung Electronics Co., Ltd.*, 695 F.3d 1370, 1378-79 (Fed. Cir. 2012) (finding that "each" modified "heuristic modules" and that every module had to have a unique heuristic); *Mangosoft, Inc. Oracle Corp.*, No. 02-545-SM, 2004 U.S. Dist. LEXIS 19357 (D.N.H. Sep. 21, 2004) (finding that "each" meant "every one of" the previously referred to plurality).[8]

Claim 10 also requires that each of the data packages have N data elements, where "N" is "an integer." '2893 patent at 12:29. As such, "N" would be superfluous were it not a *fixed* value for all the data packages because if the data packages have variable sizes (i.e., some packages sized "N" data elements, some sized "N+1" or "N+2" data elements), the limitation "each data package comprising N data elements" would effectively be read out of the claim. Hassoun Decl. at ¶95; *see also Bicon, Inc. v. Straumann Co.*, 441 F.3d 945, 951 (Fed. Cir. 2006) ("the effect of adopting Diro's proposed claim construction would be to read limitations … out of the claim.

[8] Extrinsic evidence confirms that the term "each" means "every" in this context. For example, various dictionaries equate the term "each" with "every." *See* Ex. 14 (Black's Law Dictionary, 5th Ed. (1979), DEF_1331_0000033) ("Each. A distributive adjective pronoun, which denotes or refers to ***every one of the persons or things mentioned***; ***every one of two or more persons or things***, composing the whole, separately considered.") (emphasis added); Ex. 15 (American Heritage College Dictionary, 3d Ed. (2000), DEF_1331_0000561) ("each … Being one of two or more considered individually; ***every***") (emphasis added).

Not only would that be contrary to the principle that claim language should not treated as meaningless, but it would be contrary to the specification").

Defendants' construction is also dictated by the specification. The specification teaches that the alleged "invention" is based on the need to maintain "correct periodicity between network stations." '2893 patent at 2:15-17. The specification then continues:

> ***Because the data packages have a fixed size of N data elements***, the communication of a complete package between two network stations takes N clock cycles, or N handshake driven data transfers in case of an asynchronous implementation of the network . . . . Since a network station expects routing information to arrive periodically ***(i.e. after every N cycles)***, the introduction of a delay on the first communication channel (which typically is the slowest channel of the network) matching such a period, i.e. by delaying the whole data package rather than a single data element, the delayed data package is received by the receiving network station during the appropriate period, e.g. clock cycle.

'2893 patent at 2:17-33 (emphasis added). Thus, not only does the specification teach that data packages (plural) have a "***fixed size*** of N data elements," it also explains why: to maintain periodicity such that routing information arrives at network stations at defined clock cycles. i.e., "after every N cycles." *Id.*; *see also* Hassoun Decl. at ¶96. This is essential to the proper operation of the disclosed invention. *Id.*

Without Defendants' construction, claim 10 would diverge from the very solution taught by the patent. Hassoun Decl. at ¶¶97-101. As the specification explains, the clock speed of an integrated circuit is often determined by the slowest communication channel between network stations because electrical signals can only travel so far in a given time period. '2893 patent at 1:34-38. A known method for allowing clock speed to be increased was to place a data storage element into the slowest communication channel. *Id.* at 1:38-46.[9] According to the patent, this

[9] Data storage elements functions as waystations, breaking up a slow channel into two or more shorter, faster channels. Hassoun Decl. at ¶98. In the case of a single data storage element, during the first clock cycle, the signal is transmitted from the sending network station to the data storage element. During the second clock cycle, the signal is transmitted from the data storage element to

known method created a problem when using routers designed to receive routing information within the data packages during predefined clock cycles. *Id.* at 1:54-57. Specifically, the one cycle delay caused by inserting the data storage element into the channel caused the routing information to arrive outside of its predefined clock cycle, resulting in errors. *Id.* at 1:57-61.

To overcome the problem with the prior known solution, the '2893 patent first teaches that data packages communicated by the network stations of its integrated circuit all have the same fixed size of N data elements. '2893 patent at 2:15-22. The '2893 patent then teaches "delay[ing] ***the whole data package*** rather than a single data element" ('2893 patent at 2:30-31 (emphasis added)) by inserting M*N data storage elements, where N is the number of data elements within the packages and M is an integer (*id.* at 1:65-2:14). *See also id.* at 5:54-62 ("this communication channel…is equipped with M*N data storage elements to introduce a delay of M*N cycles onto the communication channel, with N corresponding to the size of a data package, thus allowing an increase of the maximum communication frequency of the data network 100 at the expense of the introduction of a ***delay of a single data package***, i.e. the number of clock cycles it takes to communicate such a data package, on the slow communication channel 150." (emphasis added)). Because the number of data storage elements inserted into the channel is a multiple of the number of data elements in a data package, the arrival of the data package as a whole is shifted such that the data element containing routing information arrives during a specific clock cycle where the router expects routing information. *Id.* at 5:54-62; 2:26-33; Hassoun Decl. at ¶¶99-100. This is illustrated below:

---

the receiving network station. Thus, the signal can be transferred over two faster clock cycles rather than one slower clock cycle, allowing for a faster clock over the entire integrated circuit. *Id.*

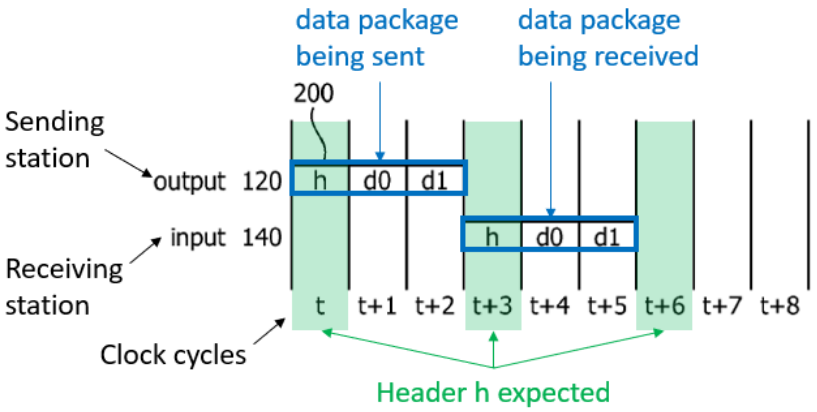

Hassoun Decl. at ¶100.

This solution only works, however, if every data package communicated by the network stations has the same number N of data elements. Hassoun Decl. at ¶¶100-101. If some data packages contained more or less than N data elements, the periodicity maintained by the system would be lost and the network stations would not get routing information during expected clock cycles. *Id; see also* '2893 patent at 1:54-61. For example, if one data package had an extra data element (N+1), the receiving station would receive non-routing information data in a clock cycle intended for it to receive routing information. Hassoun Decl. at ¶101.

Thus, a POSITA would have understood that the solution to the problem described in the '2893 patent requires that *every* data package communicated by the network stations has a *fixed size* of N data elements. Hassoun Decl. at ¶¶97-102; *Phillips*, 415 F.3d at 1316 ("Ultimately, the interpretation to be given a term can only be determined and confirmed with a full understanding of what the inventors actually invented and intended to envelop with the claim.") (citation omitted).

2. "data package"

Defendants' Proposed Construction	Plaintiff's Proposed Construction
See Defendants' construction of "each data package comprising N data elements" above.	"Fixed-size arrangement of data"

Defendants previously proposed to construe the term "each data package comprising N data elements." *See supra* at §IV(F)(1). Defendants' proposed construction obviates the need to construe "data package" separately. A POSITA would understand the term "data package" within the context of Defendants' construction without additional construction. Hassoun Decl. at ¶103.

NST's construction does not resolve the dispute regarding whether *every* data package must have the *same* fixed size of N data elements identified above. First, it does not clarify whether all, some, or even just one data package within the system needs to be analyzed as part of the infringement analysis. Second, it is ambiguous as to whether the number of data elements having a fixed-size arrangement applies to just a single data package, or the fixed-sized arrangement applies across *every* data package. As discussed above, the claim language and the specification make clear that *every* data package communicated by the network stations must have a fixed size of N data elements, while NST's construction attempts to leave open ambiguity on this issue so that it can argue that the claims cover something they were never intended to cover. *See supra*, § IV(F)(1). Finally, NST's construction should be rejected because it introduces the concept of the "arrangement" of the data, which is ambiguous and something not contemplated by the claim language "data package."

3. "data storage elements"

Defendants' Proposed Construction	Plaintiff's Proposed Construction
"each being a structure that stores one data element"	"Array of one or more elements that store data."

The dispute here is essentially whether a "data storage element" stores one "data element" or if it can store more than one. Both the claim language and the specification show that each "data storage element" stores only one "data element."

Starting with the claim language, claim 10 requires "inserting M*N data storage elements into the data communication network, M being a positive integer, for introducing a delay of M*N cycles on the first communication channel." This corresponds to the "N data elements" in each data package recited earlier in the claim and creates a mathematical relationship between the number of data elements (N), the number of data storage elements (M*N), and the number of cycles of delay caused by the data storage elements (M*N). Hassoun Decl. at ¶106. If a data storage element stores more than one data element, this mathematical relationship would be lost. *Id.*

The specification further confirms this conclusion. Specifically, in discussing the asynchronous embodiment, the specification teaches that "the FIFO buffer 509 must be capable of storing more than M*N data elements…. This can be realized by adding one or more data storage elements to the M*N data storage elements as overwrite protection." '2893 patent at 9:47-51. This establishes that each data storage element stores one data element for two reasons. First, if a data storage element could store more than one data element, it would be unnecessary to add additional data storage elements in order to store more than M*N data elements. Second, this passage confirms that a data storage element is not a larger structure that stores multiple data elements (e.g., the FIFO buffer 509), but rather is an individual structure that stores a single data element. Hassoun Decl. at ¶107. As another example, the specification teaches that the data storage elements store a single data element, such as "first data element h" (*id.* at 6:36), for a clock cycle before passing it on during the next clock cycle. *See id.* at 6:62-66 ("the first data

storage element 160 receives the header h at t+3, passes it on to the second data storage element 160 at t+4, which passes it on to the third data storage element 160 at t+5, which finally passes it on to the data router 160 at t+6"); 8:1-4 ("At T=t, data element h is received by data storage element 160 in the first subchannel 152, which stores the data element h and sends it to the data router 140 at T=t+1"). There is no teaching that the data storage elements could each store more than one data element.

NST's construction of "data storage elements" is inconsistent with the claim language and specification in that it allows a data storage element to store "one or more elements." Moreover, "array" is an ambiguous, potentially overbroad term that does not appear in the specification and will not help the jury understand the scope of the claims.

G. '800 Patent Terms

1. "optimal amount of data"

Defendants' Proposed Construction	Plaintiff's Proposed Construction
Indefinite	Plain and ordinary meaning.

The term "optimal amount of data" is indefinite because it lacks objective bounds, even in view of the specification. "The claims, when read in light of the specification and the prosecution history, must provide objective boundaries for those of skill in the art." *Interval Licensing LLC v. AOL, Inc.*, 766 F.3d 1364, 1371 (Fed. Cir. 2014) (citing *Nautilus, Inc. v. Biosig Instruments, Inc.*, 572 U.S. 898 (2014)). "[P]urely subjective" terms of degree, which leave the scope of the claim entirely up to a user's discretion, are indefinite. *Intellectual Ventures I LLC v. T-Mobile USA, Inc.*, 902 F.3d 1372, 1381 (Fed. Cir. 2018) (citation omitted).

An "optimal amount of data" is purely subjective and left to the user's discretion. The claim term and the surrounding claim language provide no guidance to a POSITA to reasonably ascertain what an "optimal amount of data" is. Hassoun Decl. at ¶120. Claim 12 merely states

that first and second "optimal amounts of data" are determined *(see, e.g.*, 11:66-12:1 "the first determination unit is configured to ***determine a first optimal amount of data*** to be buffered by the first memory") (emphasis added) and that the data is transferred when the data buffered reaches the optimal amount (*see, e.g.*, 12:8-11 "the first interconnect module transferring the first data to the second processing module ***when*** the first data buffered in the first memory ***reaches the first optimal amount***") (emphasis added). Hassoun Decl. at ¶120.

The specification provides no guidance to a POSITA on how to reasonably ascertain whether a given amount of data should be deemed "optimal" within the meaning of the claim. *Id.* at ¶¶120-128. For example, column 4:18-24 mirrors the claim language indicating that "a determination unit BLDU" determines "the optimal first or second amount of data to be buffered." '800 patent at 4:19-21; Hassoun Decl. at ¶¶121-122. However, it fails to explain how the optimality of the determined amount can be ascertained. *Id.* Column 4:49-57 states that an advantage of buffering an optimal amount, such as buffering data "until the buffered data is sufficiently large to be transferred optimally over an interconnect means in a packet," is to reduce overhead. '800 patent at 4:49-54. However, this portion of the specification merely provides an advantage of buffering, not what is "sufficiently large" or what an "optimal amount of data" is. Hassoun Decl. at ¶¶121, 123. Similarly, column 7:14-34 touts the advantage of reduced overhead resulting from buffering until an "optimal packet size" is reached, but again fails to teach a POSITA how to distinguish what constitutes an "optimal amount of data" from a non-optimal amount of data, which is critical to ascertaining the full metes and bounds of the claim. *Id.* Because guidance from the specification is lacking, a POSITA would not know how to reasonably ascertain an "optimal amount of data." *Id.* at ¶¶121-127.

There are numerous other references to optimal amount of data buffering or burst length in the specification that are similarly unhelpful. *Id.* at ¶¶124-128. For example, the specification discusses "optimal first or second amounts of data," (4:20-21) "optimal burst length," (3:29, 6:29-30, 6:49-64, 7:51) "optimal packet size," (4:55, 7:24-34) and "optimal transfer" (4:57, 6:16). However, none of these discussions indicate how a POSITA is to ascertain an "optimal amount of data." The specification also lists numerous other considerations associated with the optimal amount data to be buffered. *See* '800 patent at 2:65-67 ("interconnect utilization"); 3:29-30 ("in order to prevent deadlock"); 3:60-63 ("until a sufficiently large amount of data to be transferred over the interconnect in a single package is reached"); 4:20-24 ("according to the communication properties of said communication between said first and second processing module"); 4:56-57 ("The data is only transferred from the buffer when the conditions for an optimal transfer are satisfied."); 6:27-20 ("to suit the optimal burst length for the network N"); 6:50-53 ("according to the current communication or connection properties"); 6:53-54 ("the optimal burst length can be performed statically or dynamically"); 7:23-25 ("optimal packet size such that the buffered data can be transferred over the network"); 7:44-46 ("bursts with a length optimal for the particular interconnect"). Not only does the specification provide no guidance as to how to ascertain the optimal amount of data in view of any of these considerations individually, but there is also no guidance as to how to balance multiple conflicting considerations to ascertain a single optimal amount of data. Hassoun Decl. at ¶128. Therefore, the specification utterly fails to provide objective bounds needed for a POSITA to reasonably ascertain an "optimal amount of data." *Id.*

Courts have found similar terms indefinite in similar circumstances. For example, in *Akamai*, the patent at issue provided a list of categories for use in determining an optimal route

but failed to "provide a procedure or any other detail explaining how to consistently use…[the] information to determine 'optimal/best' routes." *Akamai Techs., Inc. v. MediaPointe, Inc.*, No. 2:22-cv-06233-MCS (AFMx), 2023 U.S. Dist. LEXIS 117167, at *19-20 (C.D. Cal. July 7, 2023). For that reason, the court found the terms "optimal" and "best" indefinite. *Id.* at *20. As another example, in *Intellectual Ventures*, the patent taught various quality of service ("QoS") characteristics and that QoS requirements may vary among applications. 902 F.3d at 1374. However, the Federal Circuit found that the claim term "optimiz[ing]…QoS" was a purely subjective term of degree and that it was indefinite as the patent failed to provide a POSITA "with any way to determine whether QoS has been optimized." *Id.* at 1381 (internal quotations omitted). Similarly, in *Optimum Processing Solutions*, the special master found the term "optimized" indefinite because a competitor would have no way of knowing when optimization had occurred due to the large number of potential performance indices. *Optimum Processing Sols. V. Advanced Micro Devices*, Civil Action No. 1:09-CV-1098-TCB, 2012 U.S. Dist. LEXIS 203463, at *39-40 (N.D. Ga. July 10, 2012).

2. "optimal moment for sending the data in said first wrapper or said second wrapper"

Defendants' Proposed Construction	Plaintiff's Proposed Construction
Indefinite	NST incorporates its definition for the term "wrapper," and the remaining language should be afforded their plain and ordinary meanings.

This term is indefinite for similar reasons as "optimal amount of data." Claim 12 states that "at least one of the first determination unit and the second determination unit is further configured to determine an *optimal moment for sending the data in said first wrapper or said second wrapper* according to communication properties" and then provides a list of ten different

communication properties. Neither the claim language nor the specification enable a POSITA to determine the scope of the claim with reasonable certainty. Hassoun Decl. at ¶¶129-134.

Even if the claim only required consideration of the individual communication properties (which Defendants disagree with, *see infra* § IV(G)(3)), it would not be reasonably clear to a POSITA how to ascertain an optimal moment with respect to the individual communication properties. Hassoun Decl. at ¶132. For example, a POSITA would have no idea how to select an optimal moment based on the non-temporal communication property of data correctness, etc. *Id.* The specification provides no guidance of how to determine what moment would qualify as "optimal" based on any of these factors. The sole discussion of any "moment" in the specification is reproduced below:

> Besides the optimal burst length determination, also the transmission ***moment*** may be determined in a similar way by the first and second determination means BLDU1, BLDU2. For a guaranteed throughput GT connection, data should wait for one of the slots reserved for its connection. Using a "flush"-like signal/flag may force the sending of the data in advance. Alternatively, for a best effort BE connection, a round robin arbitration across connections in the NI can be used. A "flush"-like signal may force a temporarily higher priority for a connection.

'800 patent at 7:4-13 (emphasis added). Though the passage mentions guaranteed throughput in describing the type of connection used for the communication, it does not provide a way for a POSITA to ascertain an "optimal moment" based on throughput. Hassoun Decl. at ¶132. In a guaranteed throughput (GT) connection as described in the patent, the transmission moment of the data is reserved in slots. *Id.* The fact that "data should wait for one of the slots reserved for its connection" ('800 patent at 7:7-8) tells a POSITA nothing about how the slots, and thus the transmission moment, are determined. Hassoun Decl. at ¶132. The passage provides that the "transmission moment may be determined in a similar way" as the "optimal burst length." '800 patent at 7:4-6. However, the specification's only discussion tying communication properties to determining an optimal amount or optimal moment provides no discussion on how the properties

are actually used. *See id.* at 6:49-53 ("The first and second determination units BLDU1, BLDU2 serve to determine the optimal burst length for transferring data over the network N according to the current communication or connection properties."); Hassoun Decl. at ¶132.

The specification similarly provides no way of reconciling the ten communication properties to determine a single optimal moment. Hassoun Decl. at ¶133. A moment in time may be optimal for one property (e.g., guaranteed throughput) but not for another property (e.g., guaranteed latency). Thus, each of these properties could lead to an ostensibly different optimal moment. *Id.* The specification offers zero guidance for how to balance these disparate communication properties to result in a single optimal moment. *Id.* Merely identifying ten different properties for determining an optimal moment without providing any procedure for making such a determination renders "optimal moment for sending the data in said first wrapper or said second wrapper" indefinite. *See Akamai*, 2023 U.S. Dist. LEXIS 117167, at *19-20; Hassoun Decl. at ¶133.

NST's proposed construction of "said first wrapper" and "said second wrapper" as "said first memory" and "said second memory" does not correct the indefiniteness problem with "optimal moment," particularly with respect to the earlier recited language in claim 12 requiring the transfer of data "when" the amount buffered reaches an optimal amount. *See* '800 patent at 12:8-15, 12:17-21. It is not clear to a POSITA which of these (optimal amount of data versus optimal moment) is controlling. Hassoun Decl. at ¶134. If the optimal moment is before the optimal amount of data is achieved, then the transfer at the optimal moment would not occur "when" the optimal amount of data is reached as previously recited in claim 12. *Id.* If the optimal moment is after the optimal amount of data is achieved, then the transfer would have taken place

before the optimal moment and would obviate the need for sending data at an optimal moment. *Id.* Therefore, "optimal moment" is indefinite, and claim 12 is invalid.

3. "according to communication properties of the communication between the master and the slave, wherein the communication properties include ordering of data transport, flow control including when a remote buffer is reserved for a connection, then a data producer will be allowed to send data only when it is guaranteed that space is available for the produced data at the remote buffer, throughput where a lower bound on throughput is guaranteed, latency where an upper bound for latency is guaranteed, lossiness including dropping of data, transmission termination, transaction completion, data correctness, priority, and data delivery"

Defendants' Proposed Construction	Plaintiff's Proposed Construction
Requires use of all the communication properties identified after "include".	according to communication properties of the communication between the master and the slave, wherein the communication properties include: ordering of data transport; flow control, including: when a remote buffer is reserved for a connection, then a data producer will be allowed to send data only when it is guaranteed that space is available for the produced data at the remote buffer; throughput, where a lower bound on throughput is guaranteed; latency, where an upper bound for latency is guaranteed; lossiness, including dropping of data; transmission termination; transaction completion; data correctness; priority, and data delivery

The issue here is whether all of the listed communication properties must be used in determining the optimal moment for sending data or if as few as only one is sufficient.[10]

The claim language supports Defendants' construction that all of the listed communication properties are required to be used. First, the list of communication properties uses the conjunctive word "and," not the disjunctive "or." To state the obvious, "and" means

[10] Defendants agree with the punctuation provided by NST in its construction which adds clarity.

"and." NST cannot re-write the claim by changing "and" to "or." Second, the term says "according to communication properties [(plural)] of the communication between the master and the slave." (emphasis added). The use of the plural "properties" further confirms that more than one of the properties is used.

The specification further supports Defendants' construction. The specification provides a similar list of what it calls "connection properties." '800 patent at 5:27-35. In contrast to the claim term, however, the specification says that the connection properties "may include" and uses the disjunctive "or" to join the list of properties. This shows that contrary to the claim language, the drafter knew how to write the list of properties in such a way as to only require one of them, and conspicuously chose the conjunctive "and" in claim 12.

Of particular relevance to the construction of this term is the prosecution history of the '800 patent, which confirms that the USPTO Patent Examiner understood the claim to require the use of ***all*** the listed properties. The language at issue in claim 12 was originally included as part of dependent claim 6. Ex. 19 at Notice of Allowability p. 2; Ex. 17 at 4-5. The Examiner first acknowledged that claim 6 contained allowable subject matter in a Feb. 24, 2011 Office Action. Ex. 18 at 20. The Examiner gave the following reasons for finding claim 6 had allowable subject matter:

> The Examiner is unable to find in the prior art a disclosure of a system that determines the optimal time to send data over a communication line ***using all of the listed conditions/requirements***.

Id. (emphasis added). Therefore, at this point in time, the applicants were on notice that the Examiner interpreted this language according to its plain meaning, which requires the use of "all of the listed conditions/requirements" of claim 6. In response, the Applicant amended the independent claims with the exact language of claim 6 (including application claim 15 that issued as claim 12), without any comment or argument on the Examiner's interpretation of the

claim language, nor any changes to the language. Ex. 19 at 2-15. The independent claims of the '800 patent were then allowed because the applicants amended them to include the "extensive list of properties" from dependent claim 6. Ex. 20 at Notice of Allowability p. 2 ("The prior art found alone or in combination does not teach or suggest the communication properties of the communication between the master and slave used to determine the optimal moment for sending data, incorporating the claimed list of communication properties to make that determination."). The applicant imported all of these limitations, as the Examiner recognized, in order to secure allowance of this patent.

The Examiner would not have allowed this claim if only one of the communication properties needed to be considered. During prosecution, the Examiner rejected the broader claims that did not have the lengthy list of communication properties based on prior art, including the Katzman reference, which disclosed the use of priority to determine data transfer. *See, e.g.*, Ex. 21 at 4:33-41; Ex. 16 at 2, 9; Ex. 18 at 2, 13-16. "Priority" is one of the items in the list of properties that the applicant brought into this claim. The fact that the Examiner allowed the subsequently-amended claims over Katzman confirms the Examiner did so because he was giving the claim language its ordinary meaning, which required use of ***all*** of the recited communication properties. If NST's construction is adopted, NST would be recapturing claim scope that it expressly gave up during prosecution. NST should not be able to recapture claim scope that it had given up during prosecution.

4. "first determination unit" / "second determination unit"

Defendants' Proposed Construction	Plaintiff's Proposed Construction
Subject to Section 112 ¶ 6. Function: "determining a first/second optimal amount of data to be buffered by the first/second memory" and for at least one of the first determination unit and the second	NST incorporates its definition for the term "determination unit" (as "circuit that makes determinations based on stored or received information.") and the remaining language

determination unit "determining an optimal moment for sending data" Structure: indefinite	should be afforded their plain and ordinary meanings.

Again, when a claim limitation does not use the term "means," the rebuttable presumption that § 112, ¶ 6 does not apply is overcome if "the claim term fails to 'recite sufficiently definite structure' or else recites 'function without reciting sufficient structure for performing that function.'" *Williamson,* 792 F.3d at 1349 (citation omitted). That is the case with "first determination unit" and "second determination unit" in claim 12 of the '800 patent. The word "determination" is simply a repetition of the subsequently claimed function "to determine…". The word "unit" is well-recognized to be a nonce word that, like "means" or "module," does not provide any description of structure. *WSOU Investments*, 2023 U.S. App. LEXIS 25255, at *10-13 (holding "alerting unit" subject to § 112, ¶ 6 and noting that a "'unit' could be almost anything"); *Diebold Nixdorf, Inc. v. Int'l Trade Comm'n*, 899 F.3d 1291, 1297-8 (Fed. Cir. 2018) (finding "cheque standby unit" subject to § 112, ¶ 6). A person of ordinary skill in the art would not have understood "determination unit" to have any known meaning or be sufficiently definite as the name for a particular structure. Hassoun Decl. at ¶111.

Like the claims at issue in *WSOU Investments* and *Diebold*, claim 12 of the '800 patent merely recites the "first determination unit" and "second determination unit" in terms of their locations (in the first and second interconnect modules) and their functions (to determine the first and second optimal amounts of data to be buffered by the first memory). Moreover, the specification interchangeably refers to "first and second determination ***units*** BLDU1, BLDU2" as "first and second determination ***means*** BLDU1, BLDU2," confirming that "unit" is being used as a placeholder for "means." '800 patent at 6:47-50; 7:4-6. Therefore, § 112, ¶ 6 applies to "first determination unit" and "second determination unit."

The functions of the first and second determination units in claim 12 are recited as: "determine a first [second] optimal amount of data to be buffered by the first [second] memory" and, for at least one of the first and second determination units: "determine an optimal moment for sending the data in said first wrapper or said second wrapper." NST does not dispute that, if § 112, ¶ 6 applies, these are the recited functions.

Again, however, the specification does not disclose a structure for performing these functions. Hassoun Decl. at ¶¶112-115. Instead, the specification merely discloses that these claimed functions are performed by first and second determination units BLDU1 and BLDU2, also referred to as first and second determination means BLDU1 and BLDU2. *See* '800 patent at 6:47-7:13. Fig. 2 of the '800 patent shows first/second determination units/means BLDU1 and BLDU2 merely as black boxes without any specifics as to their structure:

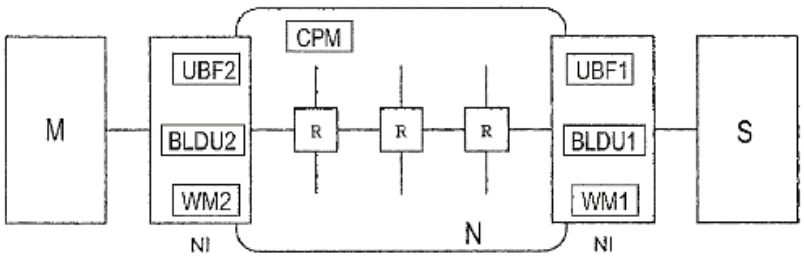

FIG.2

As discussed above in relation to "dropping means," linking the claimed function to nothing more than a black box abstraction is insufficient to comply with § 112, ¶ 6. *See supra*, § IV(B) and the cases cited therein. Thus, "first [second] determination units" are mean-plus-function terms for which the patentee was required – but failed – to disclose sufficient corresponding structure in the specification, rendering the terms indefinite.

Even if this term were not governed by § 112, ¶ 6, NST's proposed construction of "determination unit" as "circuit that makes determinations based on stored or received

information" should be rejected for at least two reasons. First, the specification makes no mention of any "circuit" as it relates to "determination unit," let alone a circuit that makes determinations based on stored or received information as set forth in NST's construction. In fact, the word "circuit" does not appear anywhere in the Description of the Preferred Embodiments. Second, NST's construction is unduly narrow because the recited functions need not be implemented using a circuit. Specifically, the functions identified for the first and second determination units can be implemented as software or firmware operated by general purpose hardware in the integrated circuit. Hassoun Decl. at ¶117. Therefore, limiting the determination units to "circuits" would be improper. Moreover, the specification states that optimal burst length "may be" performed based on information stored or received (i.e., it is optional). '800 patent at 6:62-65. Further, it is conceivable a circuit, software/firmware operated by general purpose hardware, etc., could be designed to perform the functions of the determination units without using stored or received information. Hassoun Decl. at ¶118. Therefore, NST's proposed construction should be rejected.

As the patent fails to adequately disclose structure corresponding to the claimed determining functions, the Court should find claim 12 of the '800 patent invalid as indefinite.

5. "said first wrapper" / "said second wrapper"

Defendants' Proposed Construction	Plaintiff's Proposed Construction
Indefinite	"said first memory" / "said second memory"

In patent claims, terms are first introduced using an indefinite article (e.g., "*a* wrapper") and later referred to using a definite article (e.g., "*the* wrapper" or "*said* wrapper") so that the reader knows when the claim is referring to a previously introduced element. *See* 3 Chisum on Patents § 8.06 (2023). When a term is first introduced using a definite article, the term lacks "antecedent basis." A term that lacks antecedent basis is indefinite if "such basis is not otherwise

present by implication or the meaning is not reasonably ascertainable." *Halliburton Energy Servs. v. M-I LLC*, 514 F.3d 1244, 1249 (Fed. Cir. 2008) (citation omitted).

Claim 12 provides no antecedent basis for the terms "said first wrapper" and "said second wrapper." The terms "first wrapper" and "second wrapper" do not previously appear in the claim.

This lack of antecedent basis renders claim 12 indefinite because there are at least three possible structures that "said first wrapper" and "said second wrapper" could be referring to, all of which would be consistent with the specification's teaching of functions performed by a "wrapper," and a POSITA would not be able to reasonably ascertain which one is correct. Hassoun Decl. at ¶¶135-138. First, the terms could be referring to the previously-recited "first memory" and "second memory" (as suggested by NST's proposed construction). *Id.* at ¶136. This would be consistent with the specification's teaching that the wrapper may "buffer data." '800 patent at 3:41-46; 3:54-60; 5:58-64; 6:14-16. The buffering function in claim 12 is performed by the "first memory" and the "second memory." *Id.* at 11:63-66; 12:1-3; Hassoun Decl. at ¶136. These structures store data and claim 12 recites that there is "data in said first wrapper or said second wrapper." '800 patent at 12:18-19; Hassoun Decl. at ¶136.

However, that is not the only possibility. The terms "said first wrapper" and "said second wrapper" could be referring to the previously-recited "first interconnect module" and "second interconnect module." Hassoun Decl. at ¶136. This would be consistent with the specification's teaching that the wrapper may "transfer" data. '800 patent at 3:59-60; 3:64-4:2; 4:41-46; 6:22-25. The transferring function in claim 12 is performed by the first and second interconnect modules. '800 patent at 12:8-14; Hassoun Decl. at ¶136. These structures contain the determination units, which the specification teaches the wrapper may contain. '800 patent at

4:18-24 ("at least one of the first and second wrapper means comprising a determination unit BLDU").

Third, "said first wrapper" and "said second wrapper" could be referring to a previously-unrecited structure, such as an interface structure. Hassoun Decl. at ¶137. This would be consistent with the specification's teaching that "wrappers" have interface functionality that allows IP modules to be designed separately from the interconnect. '800 patent at 8:13-20; This is consistent with how "wrapper" is used in the extrinsic evidence. Hassoun Decl. at ¶137. Wrappers were known in the art to convert between the protocol used by an IP module and the protocol used by the interconnect or another IP module. *Id.*; *see also, e.g.*, Ex. 24 at 804; Ex. 26 at 5. The inventors of the '800 patent also use wrapper in this manner in their writings. Ex. 22 at 5 ("we present a modular NI architecture, which is split into a kernel, providing core functionality, and a number of shells to extend functionality, e.g., ***wrappers to provide an interface to existing bus protocols***") (emphasis added).

NST's construction attempts to correct the lack of antecedent basis by construing the terms as one of the previously recited structures. However, because there are *multiple* structures that "said first wrapper" and "said second wrapper" could be referring to, a POSITA would not be able to reasonably ascertain which of these structures "said first wrapper" and "said second wrapper" refer to. *Id.* NST should not be allowed to arbitrarily pick one of the multiple possible structures under the guise of claim construction. Therefore, these terms are indefinite.

6. "wrapper"

Defendants' Proposed Construction	Plaintiff's Proposed Construction
Indefinite	"memory"

The claim term in the claim is "said first wrapper or said second wrapper," not "wrapper" alone. Therefore, this term is indefinite for the same reasons as "said first wrapper" and "said second wrapper" discussed in the section immediately above.

Dated: October 12, 2023

s/ *J. Derek Vandenburgh*
Deron R. Dacus
State Bar No. 00790553
The Dacus Firm, P.C.
821 ESE Loop 323, Suite 430
Tyler, Texas 75701
Telephone: (903) 705-1117
Facsimile: (903) 581-2543
ddacus@dacusfirm.com

J. Derek Vandenburgh (*pro hac vice*)
Joseph W. Winkels (*pro hac vice*)
Caroline Marsili (*pro hac vice*)
Nathan D. Louwagie (*pro hac vice*)
Carlson, Caspers, Vandenburgh & Lindquist, P.A.
225 South Sixth Street, Suite 4200
Minneapolis, MN 55402
(612) 436-9600
dvandenburgh@carlsoncaspers.com
jwinkels@carlsoncaspers.com
nlouwagie@carlsoncaspers.com
cmarsili@carlsoncaspers.com

Counsel for Defendants Qualcomm Incorporated and Qualcomm Technologies, Inc.

s/ *Alan A. Limbach*
John M. Guaragna (Bar No. 24043308)
DLA PIPER LLP (US)
401 Congress Avenue, Suite 2500
Austin, TX 78701
Telephone: (512) 457-7000
Facsimile: (512) 457-7001
john.guaragna@us.dlapiper.com

Mark D. Fowler
Alan A. Limbach
Carrie L. Williamson
Marinna C. Radloff
DLA PIPER LLP (US)
2000 University Avenue
East Palo Alto, CA 94303-2214
Telephone: (650) 833-2000
mark.fowler@us.dlapiper.com
alan.limbach@dlapiper.com
carrie.williamson@us.dlapiper.com
marinna.changradloff@us.dlapiper.com

Attorneys for Arteris, Inc.

CERTIFICATE OF SERVICE

I hereby certify that all counsel of record who are deemed to have consented to electronic service are being served this 12th day of October, 2023, with a copy of this document via the Court's CM/ECF system per Local Rule CV-5(a).

s/ *J. Derek Vandenburgh*