**IN THE UNITED STATES DISTRICT COURT**
**FOR THE EASTERN DISTRICT OF TEXAS**
**MARSHALL DIVISION**

| | | |
|---|---|---|
| NETWORK SYSTEM TECHNOLOGIES, LLC, | § | |
| *Plaintiff,* | § | |
| v. | § | CIVIL ACTION NO. 2:22-CV-00482-RWS |
| TEXAS INSTRUMENTS INCORPORATED, | § | |
| *Defendant.* | § | |

**CLAIM CONSTUCTION ORDER**

Before the Court is Plaintiff Network System Technologies, LLC's ("Plaintiff" or "NST") Claim Construction Opening Brief (Docket No. 98),[1] Defendant Texas Instruments Inc.'s ("Defendant" or "TI") Responsive Claim Construction Brief (Docket No. 107), and Plaintiff's Claim Construction Reply Brief (Docket No. 110). Also before the Court are the parties' Joint Claim Construction and Prehearing Statement (Docket No. 84) and the parties' Joint Claim Construction Chart (Docket No. 115).

The Court held a claim construction hearing on November 8, 2023, to determine the proper construction of the disputed claim terms in U.S. Patent Nos. 7,366,818 (" '818 Patent"), 7,373,449 (" '449 Patent"), 7,594,052 (" '052 Patent"), 7,769,893 (" '9893 Patent"), 8,072,893 (" '2893 Patent"), and 8,086,800 (" '800 Patent") (collectively, "the Asserted Patents"). Docket No. 135. Shortly before the start of the November 8, 2023 hearing, the Court provided the parties with

[1] Citations to the parties' filings are to the filing's number in the docket (Docket No.) and pin cites are to the page numbers assigned through ECF.

preliminary constructions with the aim of focusing the parties' arguments and facilitating discussion. Docket No. 135 at 4:24–5:11.

The Court issues this Claim Construction Order and hereby incorporates-by-reference the claim construction hearing and transcript as well as the demonstrative slides presented by the parties during the hearing. For the following reasons, the Court provides the constructions set forth below.

## I. BACKGROUND OF THE ASSERTED PATENTS

The Asserted Patents generally relate to integrated circuits having a plurality of circuitry modules that are communicatively interconnected via network-on-chip ("NoC") technology.

### 1. The '818 Patent

The '818 Patent, titled "Integrated Circuit Comprising a Plurality of Processing Modules and a Network and Method for Exchanging Data Using Same," issued on April 29, 2008, and was filed on July 4, 2003. *See* Docket No. 98-1. The '818 Patent generally "relates to an integrated circuit having a plurality of processing modules and a network arranged for providing connections between processing modules and a method for exchanging messages in such an integrated circuit." '818 Patent at 1:8–12. The Abstract of the '818 Patent states:

> An integrated circuit comprising a plurality of processing modules M, S and a network N; RN arranged for providing at least one connection between a first and at least one second module M, S is provided. Said connection supports transactions comprising outgoing messages from the first module to the second modules and return messages from the second modules to the first module. Said integrated circuit comprises at least one dropping means DM for dropping data exchanged by said first and second module M, S. Accordingly, an alternative scheme for transaction completion is provided, where full and immediate transaction completion is merely applied for certain cases. The invention is based on the idea to allow the dropping of data in certain cases.

Claim 1 of the '818 Patent is an illustrative claim and recites the following elements (disputed terms in italics):

> 1. *Integrated circuit* comprising a plurality of processing modules (M, S) said modules being disposed on the same chip, and a *network* (N; RN) arranged for providing at least one connection between a first and at least one second module (M, S),
>
> wherein said modules communicate via a *network* on chip, and
>
> wherein said connection supports transactions comprising outgoing messages from the first module to the second modules and return messages from the second modules to the first module, the *integrated circuit* comprising at least one *dropping means (DM) for dropping data exchanged by said first and second module (M, S)*, and
>
> at least one *interface means (ANIP, PNIP) for managing the interface between a module (M, S) and the network (N, RN), wherein said interface means (ANIP, PNIP) comprises a first dropping means (DM) for dropping data, and wherein the dropping of data and therefore the transaction completion can be controlled by the interface means*.

'818 Patent at 12:6–25.

**2. The '449 Patent**

The '449 Patent, titled "Apparatus and Method for Communicating in an Integrated Circuit," issued on May 13, 2008, and was filed on October 7, 2003. *See* Docket 98-2. The '449 Patent generally "relates to an integrated circuit having a plurality of processing modules and a network arranged for providing connections between processing modules and a method for exchanging messages in such an integrated circuit." '449 Patent at 1:7–11. The Abstract of the '449 Patent states:

> An integrated circuit comprising a plurality of processing modules (M; I; S; T) and a network (N; RN) arranged for providing at least one connection between a first and at least one second module is provided. Said connections comprises a set of communication channels each having a set of connection properties. Said connection supports transactions comprising outgoing messages from the first module to the second module and return messages from the second module to the first module. The connection properties of the different communication channels of said connection can be adjusted independently. Therefore, the utilization of the resources of a network on chip is more efficient, since the connection between modules can be efficiently adapted to their actual requirement, such that the connection is not over dimensioned and unused network resources can be assigned to other connections.

Claim 10 of the ’449 Patent is an illustrative claim and recites the following elements (disputed terms in italics):

> 10. Method for exchanging messages in an *integrated circuit* comprising a plurality of modules, the messages between the modules being exchanged over connections via a *network*, wherein said connections comprises a set of communication channels each having a set of connection properties, any communication channel being independently configurable, wherein said connection through the *network* supports transactions comprising at least one of outgoing messages from the first module to the second module and return messages from the second module to the first module and further comprising the steps of:
>
> the first module issuing a request for a connection with the second module to a *communication manager*, wherein the request comprises desired connection properties associated with the sets of communication channels;
>
> the *communication manager* forwarding the request to a resource manager;
>
> the *resource manager determining whether a target connection with the desired connection properties is available*; the resource manager responding with the availability of the target connection to the *communication manager*; and
>
> the target connection between the first and second module being established based on the available properties of said communication channels of said connection.

’449 Patent at 18:32–48.

### 3. The ’052 Patent

The ’052 Patent, titled “Integrated Circuit and Method of Communication Service Mapping,” issued on September 22, 2009, and was filed on March 7, 2005. *See* Docket No. 98-3. The ’052 Patent generally “relates to an integrated circuit having a plurality of processing modules and an interconnect means for coupling said plurality of processing modules and a method for communication service mapping in such an integrated circuit.” ’052 Patent 1:6–10. The Abstract of the ’052 Patent states:

> An integrated circuit, comprising a plurality of processing modules (M, S) is provided, wherein at least one first of said processing modules (M) requests at least one communication service to at least one second processing module (S) based on specific communication properties and at least one communication service identification. Furthermore, an interconnect means (N) is provided for coupling

said plurality of processing modules (M, S) and for enabling a connection based communication having a set of connection properties. At least one network interface (NI) is associated to said at least one first of said processing modules (M) for controlling the communication between said at least one first of said plurality of processing modules (M) and said interconnect means (N). Moreover, a mapping means (A) is provided for mapping the requested at least one communication service based on said specific communication properties to a connection based on a set of connection properties according to said at least one communication service identification.

Claim 6 of the ’052 Patent is an illustrative claim and recites the following elements (disputed terms in italics):

6. Method of communication service mapping in an integrated circuit, having a plurality of processing modules (M, S), wherein at least one first of said processing modules (M) requests at least one communication service to at least one second processing module (S) based on specific communication properties and at least one communication service identification, wherein said at least one communication service identification comprises at least one communication thread or at least one address range, said address range for identifying one or more second processing modules (S) or a memory region within said one or more second processing modules (S), comprising the steps of:
    - coupling said plurality of processing modules (M, S) by an *interconnect means* (N) and
    - enabling a connection based communication having a set of connection properties,
    - controlling the communication between said at least one first of said plurality of processing modules (M) and said *interconnect means* (N) by at least one network interface (NI) associated to said at least one first of said processing modules,
    - mapping the requested at least one communication service based on said specific communication properties to a connection based on a set of connection properties according to said at least one communication service identification.

’052 Patent at 10:7–32.

#### 4. The ’800 Patent

The ’800 Patent, titled “Integrated Circuit and Method for Buffering to Optimize Burst Length in Networks on Chips,” issued on December 27, 2011, and was filed on May 13, 2005. *See* Docket No. 98-6. The ’800 Patent generally “relates to an integrated circuit having a plurality of

processing modules and an interconnect means for coupling said plurality of processing, a method for buffering and a data processing system." '800 Patent 1:7–10. The Abstract of the '800 Patent states:

> An integrated circuit includes a plurality of processing modules coupled by a network. A first processing module communicates with a second processing module based on transactions. A first wrapper means associated to the second processing module buffers data from the second processing module to be transferred over the network until a first amount of data is buffered and then transfers the first amount of buffered data to the first processing module.

Claim 12 of the '800 Patent is an illustrative claim and recites the following elements (disputed terms in italics):

> 12. An *integrated circuit* comprising:
>
> a plurality of processing modules including a first processing module having a first processing memory and a second processing module having a second processing memory;
>
> a plurality of interconnect modules including a first interconnect module and a second interconnect module, wherein the first processing module is connected to the first interconnect module and the second processing module is connected to the second interconnect module; and
>
> a *network* for connecting the first interconnect module to the second interconnect module in order to provide a communication connection between the first processing module and the second processing module, wherein the first interconnect module is connected between the first processing module and the *network*, and wherein the second interconnect module is connected between the second processing module and the *network*;
>
> wherein the first interconnect module includes a first memory for buffering first data from the first processing module, the first interconnect module further including a first determination unit, wherein the first determination unit is configured to determine a first *optimal amount of data to be buffered* by the first memory, and the second interconnect module includes a second memory for buffering second data from the second processing module, the second interconnect module further including a second determination unit, wherein the second determination unit is configured to determine a second *optimal amount of data to be buffered* by the second memory,
>
> the first interconnect module transferring the first data to the second processing module when the first data buffered in the first memory reaches the first optimal amount, and the second interconnect module transferring the second data to the first processing module when the

second data buffered in the second memory reaches the second optimal amount

wherein at least one of the first determination unit and the second determination unit is further configured to determine *an optimal moment for sending the data* in said first wrapper or said second wrapper according to communication properties of the communication between the master and the slave, wherein the communication properties include ordering of data transport, flow control including when a remote buffer is reserved for a connection, then a data producer will be allowed to send data only when it is guaranteed that space is available for the produced data at the remote buffer, throughput where a lower bound on throughput is guaranteed, latency where an upper bound for latency is guaranteed, lossiness including dropping of data, transmission termination, transaction completion, data correctness, priority, and data delivery.

'800 Patent at 11:44–12:32.

**5. The '2893 Patent**

The '2893 Patent, titled "Integrated Circuit with Data Communication Network and IC Design Method," issued on December 6, 2011, and was filed on April 20, 2006. *See* Docket No. 98-5. The '2893 Patent generally "relates to an integrated circuit having a plurality of functional blocks interconnected via a data communication network." '2893 Patent at 1:5–7. The Abstract of the '2893 Patent states:

> An integrated circuit includes functional blocks and a data communication network having network stations interconnected via communication channels for communicating data packages between the functional blocks. Each data package includes N data elements having a data element with routing information for the network stations, N being an integer of at least two. The network stations include data routers and network interfaces, where each of the data routers is coupled to a functional block via a network interface. The data communication network includes first and second network stations interconnected through a first communication channel. The network includes M*N data storage elements, M being a positive integer, for introducing a delay of M*N cycles on the first communication channel.

Claim 1 of the '2893 Patent is an illustrative claim and recites the following elements (disputed terms in italics):

1. An *integrated circuit* comprising:
   a plurality of functional blocks; and

> a data communication *network* comprising a plurality of *network* stations being interconnected via a plurality of communication channels for communicating data packages between the functional blocks, each data package comprising N data elements including a data element comprising routing information for the *network* stations, N being an integer of at least two, the plurality of *network* stations comprising a plurality of data routers and a plurality of *network* interfaces, each of the data routers being coupled to a functional block via a *network* interface, the data communication *network* comprising a first *network* station and a second *network* station interconnected through a first communication channel, the data communication *network* further comprising M*N data storage elements, M being a positive integer, the data communication introducing a delay of M*N cycles on the first communication channel when the data communication *network* identifies the first communication channel as having a data transfer delay exceeding a predefined delay threshold.

'2893 Patent at 10:28–49.

**6. The '9893 Patent**

The '9893 Patent, titled "Integrated Circuit and Method for Establishing Transactions," issued on August 3, 2010, and was filed on July 4, 2003. *See* Docket No. 98-4. The '9893 Patent generally "relates to an integrated circuit having a plurality of processing modules and a network arranged for transferring messages between processing modules and a method for exchanging messages in such an integrated circuit." '9893 Patent at 1:6–10. The Abstract of the '9893 Patent states:

> An integrated circuit is provided comprising a plurality of master and slave modules and a network arranged for transferring messages between the modules, wherein a message issued by a master module comprises first information indicative for a location of a slave (addressed) module within the network, and second information indicative for a location within the addressed module. The integrated circuit further comprises at least one address translation means for arranging the first and the second information as a single address. The address translation means is adapted to determine which slave module is being addressed based on the single address, and the selected location of the slave (addressed) module is determined based on the single address. Accordingly, use of an address translation means for address mapping allows the design of the master modules to be implemented independent of address mapping.

Claim 4 of the ’9893 Patent is an illustrative claim and recites the following elements (disputed terms in italics):

> 4. A method for exchanging messages in an *integrated circuit* comprising a plurality of modules, the messages between the plurality of modules being exchanged via a *network* wherein a message issued by an addressing module M comprises:
>
> first information indicative of a location of an addressed message receiving module S within the *network* and is comprised of (1) a connection identifier identifying two or more message receiving modules S and (2) an identifier of a passive *network* interface means associated with the addressed message receiving module S, and second information indicative of a particular location within the addressed message receiving module S, such as a memory, or a register address, the method including the steps of:
>
> (a) issuing from said addressing module M a message request including said first information, said second information, and data and/or connection properties to an address translation unit included as part of an active *network* interface module associated with said addressing module M,
>
> (b) arranging, at said address translation unit, the first and the second information comprising said issued message as a single address,
>
> (c) determining, at said address translation unit, which message receiving module S is being addressed in said message request issued from said addressing module M based on said single address, and
>
> (d) further determining, at said address translation unit, the particular location within the addressed message receiving module S based on said single address.

’9893 Patent at 12:39–13:3.

## II. LEGAL STANDARDS

### A. Claim Construction

“It is a ‘bedrock principle’ of patent law that ‘the claims of a patent define the invention to which the patentee is entitled the right to exclude.’ ” *Phillips v. AWH Corp.*, 415 F.3d 1303, 1312 (Fed. Cir. 2005) (en banc) (quoting *Innova/Pure Water Inc. v. Safari Water Filtration Sys., Inc.*, 381 F.3d 1111, 1115 (Fed. Cir. 2004)). To determine the meaning of the claims, courts start by considering the intrinsic evidence. *Id.* at 1313; *C.R. Bard, Inc. v. U.S. Surgical Corp.*, 388 F.3d

858, 861–62 (Fed. Cir. 2004); *Bell Atl. Network Servs., Inc. v. Covad Commc'ns Grp., Inc.*, 262 F.3d 1258, 1267 (Fed. Cir. 2001). The intrinsic evidence includes the claims themselves, the specification, and the prosecution history. *Phillips*, 415 F.3d at 1314; *C.R. Bard, Inc.*, 388 F.3d at 861. The general rule—subject to certain specific exceptions—is that each claim term is construed according to its "ordinary and customary meaning" as understood by a person of ordinary skill in the art ("POSITA") at the time of the invention in the context of the patent. *Phillips*, 415 F.3d at 1312–13; *Alloc, Inc. v. Int'l Trade Comm'n*, 342 F.3d 1361, 1368 (Fed. Cir. 2003).

"The claim construction inquiry . . . begins and ends in all cases with the actual words of the claim." *Renishaw PLC v. Marposs Societa' per Azioni*, 158 F.3d 1243, 1248 (Fed. Cir. 1998). "[I]n all aspects of claim construction, 'the name of the game is the claim.' " *Apple Inc. v. Motorola, Inc.*, 757 F.3d 1286, 1298 (Fed. Cir. 2014) (quoting *In re Hiniker Co.*, 150 F.3d 1362, 1369 (Fed. Cir. 1998)) *overruled on other grounds by Williamson v. Citrix Online, LLC*, 792 F.3d 1339 (Fed. Cir. 2015). First, a term's context in the asserted claim can be instructive. *Phillips*, 415 F.3d at 1314. Other asserted or unasserted claims can also aid in determining the claim's meaning because claim terms are typically used consistently throughout the patent. *Id.* Differences among the claim terms can also assist in understanding a term's meaning. *Id*. For example, when a dependent claim adds a limitation to an independent claim, it is presumed that the independent claim does not include the limitation. *Id*. at 1314–15.

"[C]laims 'must be read in view of the specification, of which they are a part.' " *Id*. at 1315 (quoting *Markman v. Westview Instruments, Inc.*, 52 F.3d 967, 979 (Fed. Cir. 1995) (en banc)). "[T]he specification 'is always highly relevant to the claim construction analysis. Usually, it is dispositive; it is the single best guide to the meaning of a disputed term.' " *Id*. (quoting *Vitronics Corp. v. Conceptronic, Inc.*, 90 F.3d 1576, 1582 (Fed. Cir. 1996)); *Teleflex, Inc. v. Ficosa N. Am.*

*Corp.*, 299 F.3d 1313, 1325 (Fed. Cir. 2002). This is true because a patentee may define his own terms, give a claim term a different meaning than the term would otherwise possess, or disclaim or disavow the claim scope. *Phillips*, 415 F.3d at 1316. In these situations, the inventor's lexicography governs. *Id*.

The specification may also resolve ambiguous claim terms "where the ordinary and accustomed meaning of the words used in the claims lack sufficient clarity to permit the scope of the claim to be ascertained from the words alone." *Teleflex, Inc.*, 299 F.3d at 1325. But, " '[a]lthough the specification may aid the court in interpreting the meaning of disputed claim language, particular embodiments and examples appearing in the specification will not generally be read into the claims.' " *Comark Commc'ns, Inc. v. Harris Corp.*, 156 F.3d 1182, 1187 (Fed. Cir. 1998) (quoting *Constant v. Advanced Micro-Devices, Inc.*, 848 F.2d 1560, 1571 (Fed. Cir. 1988)); *see also Phillips*, 415 F.3d at 1323. "[I]t is improper to read limitations from a preferred embodiment described in the specification—even if it is the only embodiment—into the claims absent a clear indication in the intrinsic record that the patentee intended the claims to be so limited." *Liebel-Flarsheim Co. v. Medrad, Inc.*, 358 F.3d 898, 913 (Fed. Cir. 2004).

The prosecution history is another tool to supply the proper context for claim construction because, like the specification, the prosecution history provides evidence of how the U.S. Patent and Trademark Office ("USPTO") and the inventor understood the patent. *Phillips*, 415 F.3d at 1317. However, "because the prosecution history represents an ongoing negotiation between the [US]PTO and the applicant, rather than the final product of that negotiation, it often lacks the clarity of the specification and thus is less useful for claim construction purposes." *Id.*; *see also Athletic Alts., Inc. v. Prince Mfg.*, 73 F.3d 1573, 1580 (Fed. Cir. 1996) (ambiguous prosecution history may be "unhelpful as an interpretive resource").

Although extrinsic evidence can also be useful, it is "less significant than the intrinsic record in determining 'the legally operative meaning of claim language.' " *Phillips*, 415 F.3d at 1317 (quoting *C.R. Bard, Inc.*, 388 F.3d at 862). Technical dictionaries and treatises may help a court understand the underlying technology and the manner in which a POSITA might use claim terms, but technical dictionaries and treatises may provide definitions that are too broad or may not be indicative of how the term is used in the patent. *Id*. at 1318. Similarly, expert testimony may aid a court in understanding the underlying technology and determining the particular meaning of a term in the pertinent field, but an expert's "conclusory, unsupported assertions" as to a term's definition are not helpful to a court. *Id*. Extrinsic evidence is "less reliable than the patent and its prosecution history in determining how to read claim terms." *Id*. The Supreme Court has explained the role of extrinsic evidence in claim construction:

> In some cases, however, the district court will need to look beyond the patent's intrinsic evidence and to consult extrinsic evidence in order to understand, for example, the background science or the meaning of a term in the relevant art during the relevant time period. *See, e.g., Seymour v. Osborne*, 11 Wall. 516, 546 (1871) (a patent may be "so interspersed with technical terms and terms of art that the testimony of scientific witnesses is indispensable to a correct understanding of its meaning"). In cases where those subsidiary facts are in dispute, courts will need to make subsidiary factual findings about that extrinsic evidence. These are the "evidentiary underpinnings" of claim construction that we discussed in *Markman*, and this subsidiary factfinding must be reviewed for clear error on appeal.

*Teva Pharm. USA, Inc. v. Sandoz, Inc.*, 574 U.S. 318, 331–32 (2015).

### B. Departing from the Ordinary Meaning of a Claim Term

"There are only two exceptions to [the] general rule" that claim terms are construed according to their plain and ordinary meaning: "1) when a patentee sets out a definition and acts as his own lexicographer, or 2) when the patentee disavows the full scope of the claim term either

in the specification or during prosecution."[2] *Golden Bridge Tech., Inc. v. Apple Inc.*, 758 F.3d 1362, 1365 (Fed. Cir. 2014) (quoting *Thorner v. Sony Comput. Entm't Am. LLC*, 669 F.3d 1362, 1365 (Fed. Cir. 2012)); *see also GE Lighting Sols., LLC v. AgiLight, Inc.*, 750 F.3d 1304, 1309 (Fed. Cir. 2014) ("[T]he specification and prosecution history only compel departure from the plain meaning in two instances: lexicography and disavowal."). "The standards for finding lexicography or disavowal are exacting." *GE Lighting Sols.*, 750 F.3d at 1309.

To act as his own lexicographer, the patentee must "clearly set forth a definition of the disputed claim term," and "clearly express an intent to define the term." *Id.* (quoting *Thorner*, 669 F.3d at 1365); *see also Renishaw*, 158 F.3d at 1249. The patentee's lexicography must appear "with reasonable clarity, deliberateness, and precision." *Renishaw*, 158 F.3d at 1249.

To disavow or disclaim the full scope of a claim term, the patentee's statements in the specification or prosecution history must amount to a "clear and unmistakable" surrender. *Cordis Corp. v. Bos. Sci. Corp.*, 561 F.3d 1319, 1329 (Fed. Cir. 2009); *see also Thorner*, 669 F.3d at 1366 ("The patentee may demonstrate intent to deviate from the ordinary and accustomed meaning of a claim term by including in the specification expressions of manifest exclusion or restriction, representing a clear disavowal of claim scope."). "Where an applicant's statements are amenable to multiple reasonable interpretations, they cannot be deemed clear and unmistakable." *3M Innovative Props. Co. v. Tredegar Corp.*, 725 F.3d 1315, 1326 (Fed. Cir. 2013).

[2] Some cases have characterized other principles of claim construction as exceptions to the general rule, such as the statutory requirement that a means-plus-function term is construed to cover the corresponding structure disclosed in the specification. *See, e.g., CCS Fitness, Inc. v. Brunswick Corp.*, 288 F.3d 1359, 1367 (Fed. Cir. 2002).

### C. Definiteness Under 35 U.S.C. § 112, ¶ 2 (pre-AIA)

Patent claims must particularly point out and distinctly claim the subject matter regarded as the invention. 35 U.S.C. § 112, ¶ 2. A claim, when viewed in light of the intrinsic evidence, must "inform those skilled in the art about the scope of the invention with reasonable certainty." *Nautilus Inc. v. Biosig Instruments, Inc.*, 572 U.S. 898, 910 (2014). If it does not, the claim fails § 112, ¶ 2 and is therefore invalid as indefinite. *Id.* at 901. Whether a claim is indefinite is determined from the perspective of a POSITA as of the time the application for the patent was filed. *Id.* at 911. As it is a challenge to the validity of a patent, the failure of any claim in suit to comply with § 112 must be shown by clear and convincing evidence. *BASF Corp. v. Johnson Matthey Inc.,* 875 F.3d 1360, 1365 (Fed. Cir. 2017). "[I]ndefiniteness is a question of law and in effect part of claim construction." *ePlus, Inc. v. Lawson Software, Inc.*, 700 F.3d 509, 517 (Fed. Cir. 2012).

When a term of degree is used in a claim, "the court must determine whether the patent provides some standard for measuring that degree." *Biosig Instruments, Inc. v. Nautilus, Inc.*, 783 F.3d 1374, 1378 (Fed. Cir. 2015) (quotation marks omitted). Likewise, when a subjective term is used in a claim, "a court must determine whether the patent's specification supplies some standard for measuring the scope of the [term]." *Ernie Ball, Inc. v. Earvana, LLC*, 502 F. App'x 971, 980 (Fed. Cir. 2013) (citations omitted). The standard "must provide objective boundaries for those of skill in the art." *Interval Licensing LLC v. AOL, Inc.*, 766 F.3d 1364, 1371 (Fed. Cir. 2014).

### D. Means-Plus-Function Claiming[3]

A patent claim may be expressed using functional language. *See* 35 U.S.C. § 112 ¶ 6 (pre-AIA); *Williamson*, 792 F.3d at 1347–49 & n.3 (en banc in relevant portion). Under 35 U.S.C. § 112 ¶ 6, a structure may be claimed as a "means . . . for performing a specified function," and an act may be claimed as a "step for performing a specified function." *Masco Corp. v. United States*, 303 F.3d 1316, 1326 (Fed. Cir. 2002). When it applies, § 112 ¶ 6 limits the scope of the functional term "to only the structure, materials, or acts described in the specification as corresponding to the claimed function and equivalents thereof." *Williamson*, 792 F.3d at 1347.

But § 112 ¶ 6 does not apply to all functional claim language. There is a rebuttable presumption that § 112 ¶ 6 applies when the claim language includes "means" or "step for" terms, and a rebuttable presumption it does *not* apply in the absence of those terms. *Masco Corp.*, 303 F.3d at 1326; *Williamson*, 792 F.3d at 1348. These presumptions stand or fall according to whether a POSITA would understand the claim with the functional language to denote sufficiently definite structure or acts for performing the function in the context of the entire specification. *See Media Rights Techs., Inc. v. Capital One Fin. Corp.*, 800 F.3d 1366, 1372 (Fed. Cir. 2015) (noting § 112 ¶ 6 does not apply when "the claim language, read in light of the specification, recites sufficiently definite structure" (quotation marks omitted) (citing *Williamson*, 792 F.3d at 1349 and then citing *Robert Bosch, LLC v. Snap-On Inc.*, 769 F.3d 1094, 1099 (Fed. Cir. 2014))); *Masco Corp.*, 303 F.3d at 1326 (noting § 112 ¶ 6 does not apply when the claim includes an "act" corresponding to "how the function is performed"); *Personalized Media Commc'ns, LLC v. Int'l Trade Comm'n*, 161 F.3d 696, 704 (Fed. Cir. 1998) (noting § 112 ¶ 6 does not apply when the claim includes

[3] The asserted patents have an effective filing date before the effective date of the Leahy-Smith America Invents Act, Pub. L. No. 112-29, § 3, 125 Stat. 284, 285-93 (2011). The Court therefore refers to the pre-AIA version of the statute.

"sufficient structure, material, or acts within the claim itself to perform entirely the recited function . . . even if the claim uses the term 'means.' ").

Construing a means-plus-function limitation involves multiple steps:

> The first step in construing such a limitation is a determination of the function of the means-plus-function limitation. The next step is to determine the corresponding structure described in the specification and equivalents thereof. Structure disclosed in the specification is corresponding structure only if the specification or prosecution history clearly links or associates that structure to the function recited in the claim.

*Medtronic, Inc. v. Advanced Cardiovascular Sys., Inc.*, 248 F.3d 1303, 1311 (Fed. Cir. 2001) (citations and quotations omitted). The corresponding structure "must include all structure that actually performs the recited function." *Default Proof Credit Card Sys. v. Home Depot U.S.A., Inc.*, 412 F.3d 1291, 1298 (Fed. Cir. 2005). But § 112 does not permit "incorporation of structure from the written description beyond that necessary to perform the claimed function." *Micro Chem., Inc. v. Great Plains Chem. Co.*, 194 F.3d 1250, 1258 (Fed. Cir. 1999).

"[S]tructure can be recited in various ways, including through the use of 'a claim term with a structural definition that is either provided in the specification or generally known in the art,' or a description of the claim limitation's operation and 'how the function is achieved in the context of the invention.' " *Dyfan, LLC v. Target Corp.*, 28 F.4th 1360, 1366 (Fed. Cir. 2022) (quoting *Apple*, 757 F.3d at 1299). For § 112, ¶ 6 limitations implemented by a programmed general-purpose computer or microprocessor, the corresponding structure described in the patent specification must usually include an algorithm for performing the function. *WMS Gaming Inc. v. Int'l Game Tech.*, 184 F.3d 1339, 1349 (Fed. Cir. 1999). In that case, the corresponding structure is not a general-purpose computer but rather the special-purpose computer programmed to perform the disclosed algorithm. *Aristocrat Techs. Austl. Pty Ltd. v. Int'l Game Tech.*, 521 F.3d 1328, 1333 (Fed. Cir. 2008).

## III. LEVEL OF ORDINARY SKILL IN THE ART

It is well established that patents are interpreted from the perspective of a POSITA. *See Phillips*, 415 F.3d at 1313 ("[T]he ordinary and customary meaning of a claim term is the meaning that the term would have to a person of ordinary skill in the art in question at the time of the invention, i.e., as of the effective filing date of the patent application."). The Federal Circuit has advised that the "[f]actors that may be considered in determining the level of skill in the art include: (1) the educational level of the inventors; (2) the type of problems encountered in the art; (3) prior art solutions to those problems; (4) the rapidity with which innovations are made; (5) sophistication of the technology; and (6) education level of active workers in the field." *Env'tl Designs, Ltd. v. Union Oil Co. of California*, 713 F.2d 693, 696 (Fed. Cir. 1983). "These factors are not exhaustive but are merely a guide to determining the level of ordinary skill in the art." *Daiichi Sankyo Co. Ltd. v. Apotex, Inc.*, 501 F.3d 1254, 1256 (Fed. Cir. 2007).

Plaintiff's expert, Dr. Erik Chmelar, opines that a POSITA at the time of the invention of the Asserted Patents is an individual having at least: a Bachelor of Science (or equivalent) degree in electrical engineering, computer engineering, or a related field, and two to three years of work experience in very large-scale integrated ("VLSI") systems, such as application-specific integrated circuits ("ASICs"), application-specific standard parts ("ASSPs"), system-on-chip ("SoC"), or field-programmable gate arrays ("FPGAs"), and has an understanding of on-chip interconnection networks. Docket No. 98-7 at ¶ 26.

Defendant's expert, Dr. Mitchell Thornton, opines that a POSITA would typically have had at least either a Master's degree in electrical engineering, or related field, as well as at least three years of work experience in the field of SoC design, or a Bachelor's degree in electrical

engineering, or related field, as well as at least five years of work experience in the field of SoC design. Docket No. 107-1 at ¶ 28.

The parties both note neither party identifies any differences in the parties' proposals that would be significant for the purpose of claim construction. Docket Nos. 107 at 9; 98 at 12.

Having considered the parties' proposals and the factors that may be considered in determining the level of skill in the art, the Court finds that a POSITA would have at least a Bachelor's degree in electrical engineering, computer engineering, or a related field, and as at least two years of work experience in the field of SoC and NoC technologies.

## IV. CONSTRUCTION OF AGREED TERMS

The parties agreed to the construction of the following claim terms:

| Claim Term/Phrase | Agreed Construction |
|---|---|
| "connection properties"<br><br>'449 Patent: Claims 10, 13, 14, 15, 16<br>'052 Patent: Claim 6<br>'9893 Patent: Claims 4, 6, 8 | "properties of a connection, including ordering (data transport in order), flow control (a remote buffer is reserved for a connection, and a data producer will be allowed to send data only when it is guaranteed that space is available for the produced data), throughput (a lower bound on throughput is guaranteed), latency (upper bound for latency is guaranteed), the lossiness (dropping of data), transmission termination, transaction completion, data correctness, priority, or data delivery" |
| "flow control"<br><br>'449 Patent: Claim 13<br>'9893 Patent: Claim 8<br>'800 Patent: Claim 12 | "controlling flow whereby a remote buffer is reserved for a connection, and a data producer will be allowed to send data only when it is guaranteed that space is available for the produced data" |
| Whether the preamble is a limitation<br><br>("Integrated circuit comprising . . . from the second modules to the first module" 12:5-16)<br><br>'818 Patent: Claim 1 | Limiting |

| Claim Term/Phrase | Agreed Construction |
|---|---|
| Whether the preamble is a limitation<br><br>("Method for exchanging messages . . . the second module to the first module" 19:21-30)<br><br>'449 Patent: Claim 10 | Limiting |
| "at least one of a switch and a router"<br><br>'449 Patent: Claim 11 | "at least one switch and at least one router" |
| Whether the preamble is a limitation<br><br>("Method of communication service mapping . . . second processing modules (S)" 10:7-18)<br><br>'052 Patent: Claim 6 | Limiting |
| Whether the preamble is a limitation ("A method . . . or a register address" 12:40-53)<br><br>'9893 Patent: Claim 4 | Limiting |
| Whether the preamble is a limitation<br><br>("A method of designing circuits . . . via a network interface" 12:22-33)<br><br>'2893 Patent: Claim 10 | Limiting |

Docket No. 84 at 6–8 (Joint Claim Construction and Prehearing Statement). In view of the parties' agreement on the proper construction of the identified terms, the Court hereby **ADOPTS** the parties' agreed constructions.

In their Joint Claim Construction and Prehearing Statement, the parties also presented the following as disputed terms requiring construction:

| Claim Term/Phrase | Claims |
|---|---|
| "multicast" | '9893 Patent: Claims 7, 10 |
| "narrowcast" | '9893 Patent: Claims 7, 10 |
| "data communication introducing a delay of M*N cycles" | '2893 Patent: Claim 1 |

Docket No. 84 at 14–15. In its brief, Defendant stated that "NST has agreed to drop the following terms that it addressed in its opening brief, which will thus not be briefed by TI: 'multicast' ('9893 Patent), 'narrowcast' ('9893 Patent), 'data communication introducing a delay of M*N cycles' ('2893 Patent)." Docket No. 107 at 8 n.1. During the claim construction hearing, the parties confirmed that there is no material dispute related to the scope of these terms. Docket No. 135 at 78:17–79:24. Accordingly, the Court will not provide a construction for these terms.

## V. CONSTRUCTION OF DISPUTED TERMS

The parties dispute the scope of nine terms and phrases, with Defendant challenging many of the terms as indefinite.

### A. "network"

| Disputed Term | Plaintiff's Proposal | Defendant's Proposal |
|---|---|---|
| "network" | "multi-hop interconnection between modules separated by one or more network nodes" | Plain and ordinary meaning. |

The term "network" appears in Asserted Claims 1 and 2 of the '818 Patent; Asserted Claims 10, 11, 12, and 14 of the '449 Patent; Asserted Claims 4 and 11 of the '9893 Patent; and Asserted Claims 1 and 10 of the '2893 Patent. The Court finds that the term is used consistently in the claims and is intended to have the same general meaning in each claim.[4] Indeed, the parties agreed during

[4] The '2893 Patent does not include the same Background section as the other Asserted Patents, but it does disclose a NoC that includes "a plurality of data routers and a plurality of network interfaces, each data router being coupled to a functional block via a network interface." '2893 Patent at 1:25–28. The specification further states that "[t]he data can be communicated over the network in the form of packages that include a mixture of data and routing instructions for the network stations." *Id.* at 1:28–30. Thus, there is no indication that the term "network" in the '2893 Patent should be construed differently from the related patents. *See Omega Eng'g, Inc. v. Raytek Corp.*, 334 F.3d 1314, 1334 (Fed. Cir. 2003) ("[W]e presume, unless otherwise compelled, that the same claim term in the same patent or related patents carries the same construed meaning.").

the claim construction hearing that the term should be construed the same across the Asserted Patents. Docket No. 135 at 23:16–19, 27:7–17.

The parties dispute whether the term "network" requires construction.[5] Defendant argues that the intrinsic evidence does not constrain the claimed "network" with the limitations "multi-hop" and "separated by one or more network nodes," as Plaintiff contends. Docket No. 107 at 35. Defendant contends that the term "network" is a common term with a well-understood meaning in the art. *Id.* (citing Docket No. 107-1 at ¶ 139 (quoting Docket No. 107-5 at 6 (*Network*, AUTHORITATIVE DICTIONARY OF IEEE STANDARDS TERMS (7th ed., 2000))). According to Defendant, the specification's definition of network requires only that a plurality of network stations be interconnected. Docket No. 107 at 36. The Court disagrees.

The intrinsic evidence indicates that the term "network" should be construed as Plaintiff contends. The specification states in the Background section that "[i]n conventional processing systems the systems modules usually communicate to each other via a bus," and that "[a]s the number of modules increases however, *this way of communication is no longer practical* for the following reasons." '818 Patent at 1:27–31; '449 Patent at 1:26–30; '052 Patent at 1:25–29; '9893 Patent at 1:25–29; '800 Patent at 1:25–29 (emphasis added). The specification explains that this impracticality is because "the large number of modules forms a too high bus load [and] the bus forms a communication bottleneck as it enables only one device to send data to the bus." '818 Patent at 1:31–34; '449 Patent at 1:30–33; '052 Patent at 1:29–32; '9893 Patent at 1:29–32; '800 Patent at 1:29–32. "[T]o overcome these disadvantages," the specification states that "[n]etworks

[5] The parties' arguments for this disputed term can be found in Plaintiff's Opening Claim Construction Brief (Docket No. 98 at 13–14); Defendant's Responsive Claim Construction Brief (Docket No. 107 at 34–36); and Plaintiff's Reply Claim Construction Brief (Docket No. 110 at 13–14).

on chip (NoC) have received considerable attention recently as a solution to the interconnect problem in highly-complex chips." '818 Patent at 1:35–39; '449 Patent at 1:34–38; '052 Patent at 1:33–36; '9893 Patent at 1:32–37; '800 Patent at 1:33–36.

The specification further contrasts "[u]sing networks for on-chip communication when designing systems on chip (SoC)" to "existing on-chip interconnects (e.g., buses, switches, or point-to-point wires), where the communicating modules are *directly* connected." '818 Patent at 1:51–57; '449 Patent at 1:50–56; '052 Patent at 1:48–54; '9893 Patent at 1:49–55; '800 at Patent at 1:48-54 (emphasis added). The specification discloses that "in a NoC the modules communicate remotely via network nodes." *Id.* The specification further describes a number of differences between NoC and off-chip networks. '818 Patent at 1:57–3:35; '449 Patent 1:56–3:46; '052 Patent at 1:54–2:31; '9893 Patent at 1:55–2:45; '800 Patent at 1:54–2:2. Importantly, the specification describes the recited "network" as a "radical change" by using the claimed networks as on-chip interconnects. Specifically, the specification states the following:

> Introducing networks as on-chip interconnects *radically changes* the communication when compared to *direct interconnects*, such as buses or switches. *This is because of the multi-hop nature of a network, where communication modules are not directly connected, but separated by one or more network nodes. This is in contrast with the prevalent existing interconnects (i.e., buses) where modules are directly connected.*

'818 Patent at 3:36–43; '449 Patent at 3:47–54; '052 Patent at 2:32–39; '9893 Patent at 2:46–53; 800 at 2:3-11 (emphasis added). Accordingly, the Court finds that the specification discloses a specific "network" that includes a specific configuration.

Defendant's contention that the plain and ordinary meaning of the term "network" is "[a] series of points interconnected by communication channels" would be inconsistent with the intrinsic evidence. Docket No. 107 at 35 (citing Docket No. 107-1 at ¶ 139 (quoting Docket No. 107-5 at 6 (*Network*, AUTHORITATIVE DICTIONARY OF IEEE STANDARDS TERMS (7th ed., 2000))).

For example, it would include the "existing on-chip interconnects (e.g., buses, switches, or point-to-point wires), where the communicating modules are directly connected," which were described by the patentees as no longer practical. '818 Patent at 1:31; '449 Patent at 1:31; '052 Patent at 1:28–29; '9893 Patent at 1:28; '800 Patent at 1:28.

It would also include the "off-chip" networks, which the patentee described as different from NoC for a number of reasons. '818 Patent at 1:67–3:35; '449 Patent 1:66–3:46; '052 Patent at 1:64–2:31; '9893 Patent at 1:65–2:45; '800 Patent at 1:64–2:2. Thus, the intrinsic evidence indicates that the term "network" should be construed to mean "multi-hop interconnection between modules separated by one or more network nodes."

During the claim construction hearing, Defendant argued that the Asserted Patents disclose networks comprising preexisting interconnect technologies. Defendant's Demonstrative Slides at 25 (citing '052 Patent at 4:46–50); *see also* Docket No. 135 at 22:12–23:19. The Court notes that Defendant's citation describes the components "within a network" that may be included on a "network on chip." However, this does not address the disclosed "radical change" of separating the modules by one or more nodes with multi-hop interconnection between them. '818 Patent at 3:36–43; '449 Patent at 3:47–54; '052 Patent at 2:32–39; '9893 Patent at 2:46–53; '800 Patent at 2:3–11.

Defendant also argued during the claim construction hearing that the '818 Patent contemplates both "network" and "router network" embodiments. Defendant's Demonstrative Slides at 27 (citing '818 Patent at Figures 1 and 2); *see also* Docket No. 135 at 23:21–25:2. The Court disagrees that the abbreviations "N" and "RN" change the analysis for the disputed term "network." Indeed, a number of claims recite "network (N, RN)," which indicates that the patentees did not draw the distinction that Defendant proposes. *See, e.g.*, '818 Patent at Claim 1.

For the reasons set forth above, the Court construes the term **"network"** to mean **"multi-hop interconnection between modules separated by one or more network nodes."**

**B. "integrated circuit"**

| Disputed Term | Plaintiff's Proposal | Defendant's Proposal |
|---|---|---|
| "integrated circuit" | "interconnected circuitry on a chip" | Plain and ordinary meaning. |

The term "integrated circuit" appears in Asserted Claims 1, 2, 3, 5, 6, and 7 of the '818 Patent; Asserted Claim 10 of the '449 Patent; Asserted Claim 6 of the '052 Patent; Asserted Claim 4 of the '9893 Patent; Asserted Claims 1 and 10 of the '2893 Patent; and Asserted Claim 12 of the '800 Patent. For similar reasons as those discussed above (*see supra* Section V.A.), the Court finds that the term is used consistently in the claims and is intended to have the same general meaning in each claim.

The parties dispute whether the term "integrated circuit" requires construction.[6] Plaintiff argues that the Asserted Patents disclose embodiments concerning circuitry "on a chip" (*i.e.*, network-on-chip) rather than "off-chip." Docket No. 98 at 16 (citing Docket No. 98-7 at ¶¶ 64–65, 67–68; '818 Patent at 1:67–2:43, 1:51–53; '449 Patent at 1:66–2:42, 1:15–35, 1:50–52; '052 Patent at 1:64–2:12, 1:14–32, 1:48–50; '9893 Patent at 1:65–2:36, 1:14–34, 1:49–51; '800 Patent at 1:64–2:2, 1:14–32, 1:48–50; '2893 Patent at 1:8–13). Plaintiff also contends that its construction is supported by IEEE technical dictionaries. *Id.* (citing Docket No. 98-7 at ¶ 69). Plaintiff further argues that Defendant's construction would actually introduce the new concept that an "integrated circuit" can be off-chip, which Plaintiff contends is not disclosed by the Asserted Patents. *Id.*

[6] The parties' arguments for this disputed term can be found in Plaintiff's claim construction briefs (Docket Nos. 98 at 15–16, 110 at 14) and Defendant's response (Docket No. 107 at 36–37).

The Court generally agrees with Plaintiff but does not adopt its proposed construction because it could be confusing to a jury. As Defendant argues, Plaintiff's construction could exclude parts of an integrated circuit that are not specifically interconnected with each other but that are still part of the integrated circuit. Docket No. 107 at 37 (citing Docket No. 107-1 at ¶ 138). Moreover, one of the extrinsic definitions cited by Plaintiff defines "integrated circuit" as "the formal name for chip." Docket No. 98-8 at 25 (*Integrated Circuit*, THE COMPUTER GLOSSARY, THE COMPLETE ILLUSTRATED DICTIONARY (8th ed. 1998)). Defining the term "integrated circuit" with "chip"—its "informal name"—would not provide further clarity to a jury.

Instead, the Court finds that a POSITA would understand the term "integrated circuit" to mean "a combination of interconnected circuit elements inseparably associated on or within a continuous substrate."[7] This is the definition provided by the extrinsic evidence cited by Plaintiff's expert. Docket. No. 98-7 at ¶ 69 (citing Docket No. 98-7 at 503 (*Integrated Circuit (IC) (Solid State)*, IEEE 100: THE AUTHORITATIVE DICTIONARY OF IEEE STANDARDS TERMS (7th ed. 2000)); Docket No. 98-8 at 56 (*Integrated Circuit (Solid State)*, THE NEW IEEE STANDARD DICTIONARY OF ELECTRICAL AND ELECTRONICS TERMS (5th ed. 1993))). The Court finds that this definition is consistent with the intrinsic evidence, and rejects Defendant's argument that the intrinsic evidence does not require "on a chip." The specification states that "[t]he following embodiments relate to systems on chip, i.e. a plurality of modules on the same chip communicate with each other via some kind of interconnect." '818 Patent at 6:29–31; '449 Patent at 8:43–45.

Defendant correctly argues that two of the later filed patents, the '800 Patent and '052 Patent, state that "[t]he following embodiments relate to systems on chip, i.e. a plurality of modules

[7] During the claim construction hearing, Plaintiff agreed with the Court's preliminary finding that "integrated circuit" should be given this construction. Docket No. 135 at 6:10–13.

on the same chip (including e.g. system in a package, multi-die modules) or on different chips, communicate with each other via some kind of interconnect." '800 Patent at 5:7–10; '052 Patent at 4:43–46. For these two patents, the patentees added "or on different chips" language to the specification. According to Defendant, this means that the intrinsic evidence does not require "on a chip."

As discussed above, the Court agrees that including "chip" in the construction introduces ambiguity into the claims. Instead, it is more accurate to say that an integrated circuit requires a continuous substrate. Indeed, a POSITA would understand the identified "multi-die modules" to include "a combination of interconnected circuit elements inseparably associated on or within a continuous substrate." Moreover, Plaintiff represented to the Court that it was not attempting to exclude subchips or chiplets from the scope of the claims. Docket No. 135 at 11:7–16. Accordingly, the Court is not persuaded that the "or on different chips" language alters the understood meaning of "integrated circuit," because it would read the term "integrated" out of the claims.

For the reasons set forth above, the Court construes the term **"integrated circuit"** to mean **"a combination of interconnected circuit elements inseparably associated on or within a continuous substrate."**

### C. "one dropping means (DM) for dropping data exchanged by said first and second module (M, S) / a first dropping means (DM) / said dropping means (DM)"

| Disputed Term | Plaintiff's Proposal | Defendant's Proposal |
|---|---|---|
| "dropping means" / "one dropping means (DM) for dropping data exchanged by said first and second module (M, S) / a first dropping means (DM) / said dropping means (DM)" | **For "dropping means":** "circuit configured to drop messages"<br><br>**For "one dropping means (DM) for dropping data exchanged by …":** NST incorporates its definition for the term "dropping means." The remaining parts of this term should be afforded their plain and ordinary meanings.<br><br>**If the Court holds §112, ¶ 6 applies:** NST disagrees that this term is governed by Section 112, para 6. Nonetheless, if the Court holds that this term is so governed, NST proposes the following construction:<br><br>**Function:**<br>-Claim 1, "drop data exchanged by said first and second module"<br>-Claim 3, the function according to claim 1 and "create an error message if data is dropped"<br>-Claim 5, the function according to claim 1 and "send said error message to said first module"<br><br>**Structure:** "circuit" | Subject to Section 112 ¶ 6.<br><br>**Function:**<br>-Claim 1, "dropping data exchanged by first and second module (M, S)"<br><br>-Claim 3, "creating error messages"<br><br>-Claim 5, "sending error messages"<br><br>**Structure:**<br>-Claim 1, "buffer that implements a 'milk' policy (drops oldest data) or a 'wine' policy (drops newest data) when the buffer overflows, as disclosed in the '818 patent at 7:51–56; 8:38–39, 8:64–66." Otherwise, indefinite.<br><br>-Claims 3 and 5, "structure for claim 1 with additional structure disclosed in the '818 patent at 9:2–10."<br><br>Otherwise, indefinite. |

The phrase "dropping means (DM) for dropping data exchanged by said first and second module (M, S)" appears in asserted Claim 1 of the '818 Patent. The phrase "said dropping means (DM) are adapted to create an error message if data is dropped" appears in dependent Claim 3. The phrase "said dropping means (DM) are adapted to send said error message to a first dropping means (DM)" appears in dependent Claim 5. The parties dispute whether the phrase "dropping means (DM) for dropping data exchanged by said first and second module (M, S)" is subject to

Section 112 ¶ 6.[8] If the phrase is subject to Section 112 ¶ 6, the parties dispute the corresponding structure.

The Court presumes that the patentees intended to invoke the statutory mandates for means-plus-function clauses because the disputed phrase uses the words "means for" and specifies a function. *York Prods. v. Central Tractor Farm & Family Ctr.*, 99 F.3d 1568, 1574 (Fed. Cir. 1996) ("In determining whether to apply the statutory procedures of section 112, ¶ 6, the use of the word 'means' triggers a presumption that the inventor used this term advisedly to invoke the statutory mandates for means-plus-function clauses."). The Court finds that there is "no particular meaning to the [dropping means (DM)] term in the industry pertaining to the design of SoCs or networks on chips." Docket No. 107-1 at ¶ 39. Likewise, the remaining claim language related to the "dropping means" terms connotes function and is not "sufficiently definite meaning as the name for structure." *Williamson*, 792 F.3d at 1348. Specifically, Claim 1 recites "for dropping data exchanged by said first and second module (M, S)," Claim 3 recites creating error messages, and Claim 5 recites sending error messages. Accordingly, the Court finds that the phrase is governed by 35 U.S.C. § 112, ¶ 6.

"The first step in construing [a means-plus-function] limitation is a determination of the function of the means-plus-function limitation." *Medtronic*, 248 F.3d at 1311. The Court finds, and the parties essentially agree, that the recited function is "dropping data exchanged by first and second module (M, S)" in Claim 1. The parties also essentially agree that the recited function is "create an error message if data is dropped" in Claim 3, and "send said error message to said first module" in Claim 5. Having determined the limitation's function, "the next step is to determine

[8] The parties' respective arguments for this disputed term can be found at Docket Nos. 98 at 20–23, 110 at 7–9 and Docket No. 107 at 9–16.

the corresponding structure disclosed in the specification and equivalents thereof." *Medtronic*, 248 F.3d at 1311.

As recited in Claim 1, the "dropping means (DM)" serves to drop data exchanged by said first and second module (M, S). The specification illustrates a System on chip that includes "dropping means (DM)":

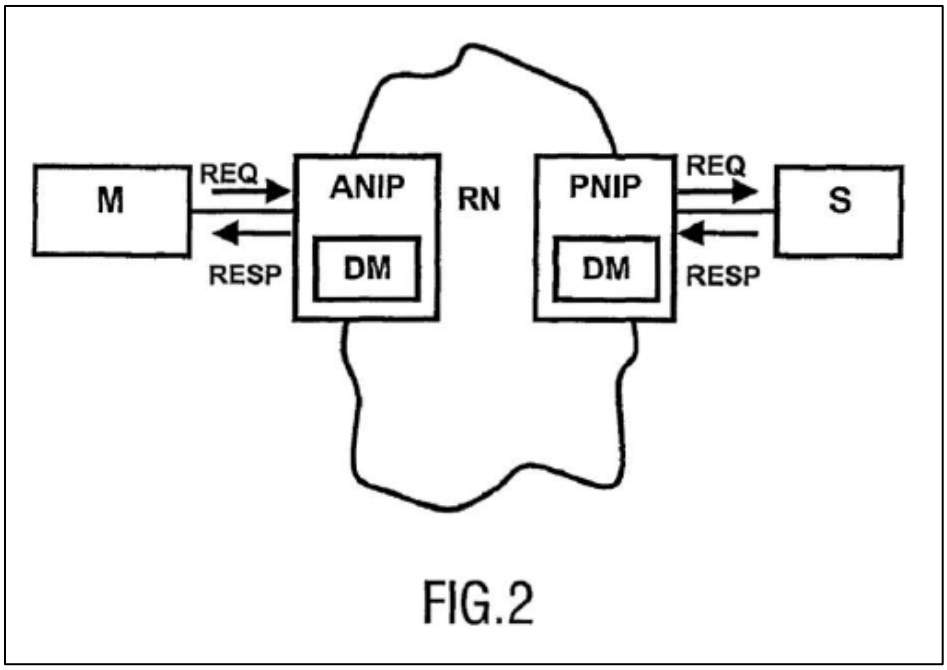


'818 Patent at Figure 2. In describing Figure 2, the specification identifies the corresponding structure of the dropping means as follows:

> Here, it is assumed, that the network N, RN, i.e. the routers, do not drop data. The active network interface ANIP as well as the passive network interface PNIP comprise a dropping manager DM, respectively. These dropping managers DM are responsible for the dropping of data or massages, i.e. only the network interfaces are able to drop data or messages. In particular, requests can only be dropped by the active network interface ports ANIP, while responses can only be dropped by the passive network interface ports PNIP. Possible scenarios include: (a) the oldest message is dropped (milk policy), or (b) the newest message is dropped (wine policy).
>
> . . .
>
> The dropping manager DM may drop data in case of buffer overflow. All of CMD, OUTDATA, and RETDATA may be dropped.

. . .

> If the connection has no flow control, messages can be dropped by the dropping managers DM, resulting also in RETSTAT=RETLOST messages. Again, combinations as those above can be made.
>
> The master module M should always receive a response to a transaction. This is achieved by the dropping managers DM. If the dropping manager DM in the passive network interface ports PNIP drops data or messages possibly because of a buffer overflow, it always returns a FAIL/ERROR message to the ANIP. This return status (RETSTAT) message will never be dropped by the dropping manager of the active network interface ports ANIP because the ANIP that initiated the transaction will reserve space for return messages of every transaction that it initiates.

'818 Patent at 7:45–56, 8:38–40, 8:64–9:10. Accordingly, the Court finds that the corresponding structure is the portion of the circuit configured to implement the scheme disclosed in the '818 Patent at 7:45–56, 8:38–40, 8:64–9:10.

Plaintiff argues that the specification explicitly discloses that "[s]aid integrated circuit comprises at least one dropping means." Docket No. 98 at 21 (citing '818 Patent at Abstract, 5:27–28, 5:37–41). Plaintiff contends that "a dropping means comprised in an integrated circuit must be a circuit element of the integrated circuit." *Id.* Plaintiff argues that the Federal Circuit has held that a circuit connotes adequate structure. *Id.* at 22 (citing *Power Integrations, Inc. v. Fairchild Semiconductor Int'l, Inc.*, 711 F.3d 1348, 1364 (Fed. Cir. 2013); *MIT v. Abacus Software,* 462 F.3d 1344, 1355 (Fed. Cir. 2006); *Linear Tech. Corp. v. Impala Linear Corp.,* 379 F.3d 1311, 1320-21 (Fed. Cir. 2004); *Apex Inc. v. Raritan Comput., Inc.*, 325 F.3d 1364, 1373 (Fed. Cir. 2003)). Plaintiff contends that because "dropping means" is part of a larger integrated circuit, it must necessarily be sufficiently structural to avoid § 112 ¶ 6 treatment.

Plaintiff's argument is misguided because it is based on the term "integrated circuit," which is introduced in the preamble, but is not based on the disputed claim language "dropping means," which is a part of the circuit. *See, e.g.*, '818 Patent at Figure 2. The Federal Circuit rejected a

similar argument in *Egenera, Inc. v. Cisco Systems, Inc.*, 972 F.3d 1367 (Fed. Cir. 2020). In *Egenera*, the Federal Circuit held that "[m]ere inclusion of a limitation within a structure does not automatically render the limitation itself sufficiently structural." *Egenera*, 972 F.3d at 1374 (discussing whether "logic" had sufficient structure when it was "part of a supposedly structural component"). The Federal Circuit stated that "the question is not whether 'logic' is utterly devoid of structure but whether the claim term recites sufficient structure to perform the claimed functions." *Id.* Here, the Court finds that the term "dropping means" does not recite sufficient structure to perform the claimed function. Accordingly, the Court rejects Plaintiff's proposed structure.

During the claim construction hearing, Plaintiff argued that the identified structure improperly imports additional functional limitations. Plaintiff's Demonstrative Slides at 18 (citing '818 Patent at 7:51–56, 8:38–39, 8:64–66, 9:2–10); *see also* Docket No. 135 at 15:3–17:10. According to Plaintiff, the identified structure includes functions that are mere examples. Plaintiff's Demonstrative Slides at 19 (citing '818 Patent at 7:51–56). The Court disagrees. The function is recited in the claim, not the specification. Likewise, the "mere examples" disclosed in the specification are disclosed embodiments of the corresponding structure that performs the function recited in the claim. Accordingly, the Court rejects Plaintiff's arguments.

In light of the intrinsic and extrinsic evidence, the Court finds that the phrase is governed by 35 U.S.C. § 112, ¶ 6, and construes the phrase **"dropping means (DM) for dropping data exchanged by said first and second module (M, S)"** as follows:

> **Function:** Claim 1: "dropping data exchanged by first and second module (M, S); Claim 3: "create an error message if data is dropped"; Claim 5: "send said error message to said first module."
>
> **Corresponding Structure:** portion of the circuit configured to implement the scheme disclosed in the '818 Patent at 7:45–56, 8:38–40, 8:64–9:10.

**D. "interface means (ANIP, PNIP) for managing the interface between a module (M, S) and the network (N, RN) wherein said interface means (ANIP, PNIP) comprises a first dropping means (DM) for dropping data, and wherein the dropping of data and therefore the transaction completion can be controlled by the interfaces means"**

| Disputed Term | Plaintiff's Proposal | Defendant's Proposal |
|---|---|---|
| "interface means (ANIP, PNIP) for managing the interface between a module (M, S) and the network (N, RN) wherein said interface means (ANIP, PNIP) comprises a first dropping means (DM) for dropping data, and wherein the dropping of data and therefore the transaction completion can be controlled by the interfaces means" | **For "interface means":**<br>"interface circuit that connects a module to a network" /<br><br>**For "interface means (ANIP, PNIP) for managing the interface…":**<br>NST incorporates its definitions for the terms "interface means," "network," and "dropping means." The remaining parts of this term should be afforded their plain and ordinary meanings.<br><br>**If the Court holds §112, ¶ 6 applies:**<br>NST disagrees that this term is governed by Section 112, para 6. Nonetheless, if the Court holds that this term is so governed, NST proposes the following construction:<br><br>Function:<br>-Claim 1, "manage the interface between a module and the network, and control the dropping of data and therefore the transaction completion"<br><br>-Claim 6, the function according to claim 1 and "store received error messages"<br><br>-Claim 7, the function according to claim 1 and "not drop error messages"<br><br>**Structure**: "circuit" | Subject to Section 112 ¶ 6.<br><br>**Function:**<br>-Claim 1, "managing the interface between a module (M, S) and a network (N, RN) and controlling dropping of data and transaction completion"<br><br>-Claim 6, "storing received error messages"<br><br>-Claim 7, "not dropping error messages"<br><br>**Structure:**<br>-Claim 1, "structure for dropping means and buffer to accommodate a return status message for outstanding transactions, as disclosed in the '818 patent at 8:40–45, 9:1–2, and 9:11–36."<br><br>Otherwise, indefinite. |

The phrase "interface means (ANIP, PNIP) for managing the interface between a module (M, S) and the network (N, RN)" appears in asserted Claim 1 of the '818 Patent. The phrase "said interface means (ANIP, PNIP) is adapted to store received error messages" appears in dependent Claim 6. The phrase "an interface means (ANIP) associated to the first module (M) is adapted not to drop error messages" appears in dependent Claim 7. The parties dispute whether the phrases are subject to Section 112 ¶ 6.[9] If the phrases are subject to Section 112 ¶ 6, the parties dispute the corresponding structure.

The Court finds that the disputed phrase uses the words "means for" and specifies a function; the Court thus presumes that the patentees intended to invoke the statutory mandates for means-plus-function clauses. *York Prods.*, 99 F.3d at 1574. The Court further finds that a POSITA would not have understood an "interface" to encompass structure necessary to perform the specific functions dropping data and transaction completion. Docket No. 107-1 at ¶ 59. The remaining claim language related to the "interface means" terms connotes function and does not recite structure. The claims recite what the interface means does, and is not "sufficiently definite meaning as the name for structure." *Williamson*, 792 F.3d at 1348.

First, the Court determines "the function of the means-plus-function limitation." *Medtronic*, 248 F.3d at 1311. The Court finds, and the parties essentially agree, that the recited function is "managing the interface between a module (M, S) and a network (N, RN) and controlling dropping of data and transaction completion" in Claim 1. The parties also essentially agree that the recited function is "store received error messages" in Claim 6, and "not drop error messages" in Claim 7. Having determined the limitation's function, "the next step is to determine

[9] The parties' respective arguments for this disputed term can be found at Docket Nos. 98 at 17–20, 110 at 6–7 and Docket No. 107 at 16–21.

the corresponding structure disclosed in the specification and equivalents thereof." *Medtronic*, 248 F.3d at 1311.

As recited in Claim 1, the "interface means (ANIP, PNIP)" serves to managing the interface between a module (M, S) and a network (N, RN) and controlling dropping of data and transaction completion. Figure 2 illustrates a System on chip that includes "interface means (ANIP, PNIP)" comprising a dropping means (DM).

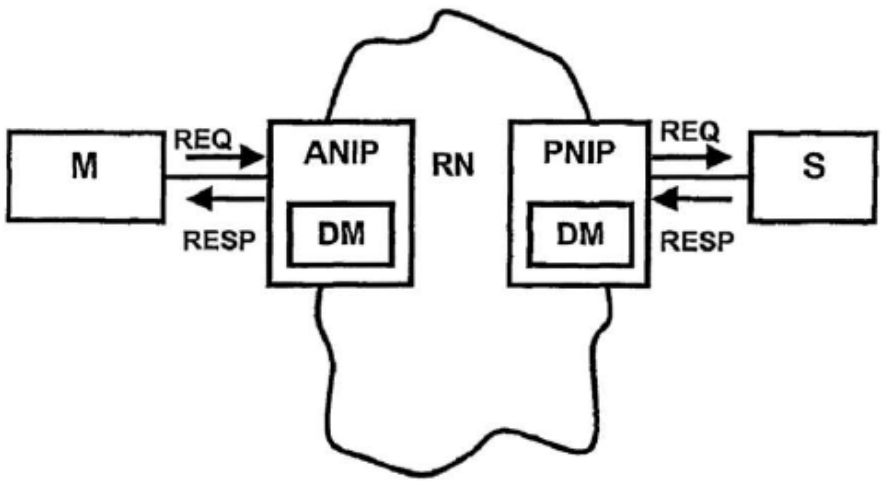


FIG.2

'818 Patent at Figure 2. In describing Figure 2, the specification identifies the corresponding structure of the interface means as follows:

> A transaction can be composed from the following messages:
>
> A command message (CMD) is sent by the ANIP, and describes the action to be executed at the slave connected to the PNIP. Examples of commands are read, write, test and set, and flush. Commands are the only messages that are compulsory in a transaction. For NIPs that allow only a single command with no parameters (e.g., fixed-size address-less write), we assume the command message still exists, even if it is implicit (i.e., not explicitly sent by the IP).
>
> An out data message (OUTDATA) is sent by the ANIP following a command that requires data to be executed (e.g., write, multicast, and test-and-set).

A return data message (RETDATA) is sent by a PNIP as a consequence of a transaction execution that produces data (e.g., read, and test-and-set).

A completion acknowledgment message (RETSTAT) is an optional message which is returned by PNIP when a command has been completed. It may signal either a successful completion or an error. For transactions including both RETDATA and RETSTAT the two messages can be combined in a single message for efficiency. However, conceptually, they exist both: RETSTAT to signal the presence of data or an error, and RETDATA to carry the data.

Messages composing a transaction are divided in outgoing messages, namely CMD and OUTDATA, and response messages, namely RETDATA, RETSTAT. Within a transaction, CMD precedes all other messages, and RETDATA precedes RETSTAT if present. These rules apply both between master and ANIP, and PNIP and slave.

A transaction without a response (e.g. a posted write) is said to be complete when it has been executed by the slave. As there is no response message to the master, no guarantee regarding transaction completion can be given. A transaction with a response (e.g. an acknowledged write) is said to be complete when a RETSTAT message is received from the ANIP. Recall that when data is received as a response (RETDATA), a RETSTAT (possibly implicit) is also received to validate the data. The transaction may either be executed successfully, in which case a success RETSTAT is returned, fail in its execution at the slave, and then an execution error RETSTAT is returned, or fail because of buffer overflow in a connection with no flow control, and then it reports an overflow error. We assume that when a slave accepts a CMD requesting a response, the slave S always generates the response.

The dropping manager DM may drop data in case of buffer overflow. All of CMD, OUTDATA, and RETDATA may be dropped. To guarantee transaction completion, RETSTAT is not allowed to be dropped. Consequently, in the ANIPs enough buffer space must be provided to accommodate RETSTAT messages for all outstanding transactions. This is enforced by bounding the number of outstanding transactions.

For the case of several slaves S in the above system, return message or response messages could be combined as follows. If each of write transaction (initiated by the master M) has been successfully executed by all slaves S, all will return RETSTAT=RETOK messages, which can be combined by the ANIP in a single message to be delivered to the master.

If the write transaction has been successfully executed only by some slaves, there will be a mix of RETSTATs (RETOK and RETERROR). They can either be combined into:

a) a single RETSTAT=RETERROR, to specify that an error occurred, or

b) a single RETSTAT, but a larger one, more descriptive, encoding where there have been errors.

All RETSTATs can be bundled together in a single RETSTAT for the master, or <slave identifiers,error code>; pairs can be bundled to form a single RETSTAT for the master.

. . .

This combination of reserving space and generating an error message whenever a message is dropped is a way to introduce flow control. Preferably, the RETSTAT message is generated by the interface of the slave module, although alternatively it could be generated at the intermediary network nodes too.

By implementing the above dropping scheme, transaction completion is guaranteed, i.e. it is always known whether an initiated transaction:

a) was delivered and executed successfully at the slave (RETSTAT=OK produced by the slave),

b) was never delivered at the slave (RETSTAT=REQLOST produced by the PNIP and returned to the ANIP),

c) was delivered at the slave, but not successfully executed (RETSTAT=ERROR produced by the slave), or

d) was delivered and executed successfully at the slave but the response message was dropped (RETSTAT=RETLOST produced by the ANIP and delivered to the master M).

This is achieved by either not dropping messages (flow-controlled connection), in this case RETSTAT is either OK or ERROR, or by allowing messages to be dropped (on a connection without flow control), but generating a RESTAT (REQLOST or RETLOST) whenever the message is dropped, or a RETOK or RETERROR as usual when the message is not dropped.

It is essential however, never to drop RETSTATs, because this completes the transaction. This is realized in that a buffer for the RETSTAT is located at the master's ANIP. The latter reserves space for RETSTATs when initiating transactions, and bounds the number of outstanding transactions (for finite sized RETSTAT buffers).

The flow control on the outgoing and return connections is in principle independent. Thus, for outgoing flow control & return flow control, the RETSTAT message is according to a) or c) above. In case of outgoing flow control & no return flow control, the RETSTAT message is a) or c) or d) above. In case of no outgoing flow control & return flow control, the RETSTAT message is a) or b) or c) above.

’818 Patent at 7:57–8:63, 9:10–49. Accordingly, the Court finds that the corresponding structure is the portion of the circuit configured to implement the scheme disclosed in the ’818 Patent at 7:57–8:63 and 9:10–49.

Plaintiff argues that the specification discloses “an integrated circuit comprising at least one interface means ANIP [(active network interface port)], PNIP [(passive network interface port)] . . . is provided . . . .” Docket No. 98 at 18 (citing ’818 Patent at 5:37–40). Plaintiff contends that an interface means comprised in an integrated circuit must be a circuit element of the integrated circuit. Docket No. 98 at 18. Plaintiff argues that the Federal Circuit has held that a circuit connotes adequate structure. *Id.* at 22 (citing *Power Integrations*, 711 F.3d at 1364; *MIT,* 462 F.3d at 1355; *Linear Tech.,* 379 F.3d at 1320–21, *Apex*, 325 F.3d at 1373).

As with the previous term, Plaintiff’s argument is misguided because it is not based on the disputed claim language, but instead is based on the term “integrated circuit.” The term “integrated circuit” is introduced in the preamble and the disputed “interface means” is a part of the circuit. Plaintiff contends that because “interface means” is part of a larger integrated circuit, it must necessarily be sufficiently structural to avoid § 112 ¶ 6 treatment. As discussed above, the Federal Circuit rejected a similar argument in *Egenera.* 972 F.3d at 1374. Here, the Court finds that the term “interface means” does not recite sufficient structure to perform the claimed function. Accordingly, for the same reasons discussed above (*see supra* Section V.C.), the Court rejects Plaintiff’s proposed structure.

In light of the intrinsic and extrinsic evidence, the Court finds that the phrase is governed by 35 U.S.C. § 112, ¶ 6, and construes the phrase **“interface means (ANIP, PNIP) for managing the interface between a module (M, S) and the network (N, RN) wherein said interface means (ANIP, PNIP) comprises a first dropping means (DM) for dropping data, and wherein the**

**dropping of data and therefore the transaction completion can be controlled by the interfaces means"** as follows:

> **Function:** Claim 1: "managing the interface between a module (M, S) and a network (N, RN) and controlling dropping of data and transaction completion"; Claim 6: "store received error messages"; Claim 7: "not drop error messages"
>
> **Corresponding Structure:** portion of the circuit configured to implement the scheme disclosed in the '818 Patent at 7:57–8:63, 9:10–49.

### E. "communication manager"

| Disputed Term | Plaintiff's Proposal | Defendant's Proposal |
|---|---|---|
| "communication manager" | "circuit that manages communication between modules"<br><br>**If the Court holds §112, ¶ 6 applies:**<br>NST disagrees that this term is governed by Section 112, para 6. Nonetheless, if the Court holds that this term is so governed, NST proposes the following construction:<br><br>**Function:** "forward a request for a connection to a resource manager"<br><br>**Structure:** "circuit" | Subject to Section 112 ¶ 6.<br><br>**Function:** receiving a request for a connection from a first module, forwarding the request to a resource manager, and receiving the availability of the target connection from the resource manager<br><br>**Structure:** Indefinite |

The term "communication manager" appears in Asserted Claim 10 of the '449 Patent. The parties dispute whether the phrase "communication manager" is subject to Section 112 ¶ 6.[10] If the phrase is subject to Section 112 ¶ 6, the parties dispute the corresponding structure.

"[A] claim term that does not use 'means' will trigger the rebuttable presumption that § 112 ¶ 6 does not apply." *CCS Fitness*, 288 F.3d at 1369. The presumption against the application of § 112, ¶ 6 may be overcome if a party can "demonstrate[] that the claim term fails to 'recite

[10] The parties' respective arguments for this disputed term can be found at Docket Nos. 98 at 23–26, 110 at 10–11 and Docket No. 107 at 21–26.

sufficiently definite structure' or else recites 'function without reciting sufficient structure for performing that function.' " *Williamson*, 792 F.3d at 1348 (quoting *Watts v. XL Sys., Inc.*, 232 F.3d 877, 880 (Fed. Cir. 2000)). "The standard is whether the words of the claim are understood by persons of ordinary skill in the art to have a sufficiently definite meaning as the name for structure." *Id.* at 1349. In determining whether this presumption has been rebutted, the challenger must establish by a preponderance of the evidence that the claims are to be governed by § 112, ¶ 6. *See Apex*, 325 F.3d at 1372.

Here, there is a rebuttable presumption that § 112, ¶ 6 does not apply because Claim 10 does not recite the word "means." Therefore, the analysis proceeds in two steps. First, the Court must determine whether the phrases are in means-plus-function form pursuant to 35 U.S.C. § 112, ¶ 6. *See Robert Bosch*, 769 F.3d at 1097. If the Court determines that the phrase recites a means-plus-function limitation, then the Court proceeds to the next step, and attempts "to construe the disputed claim term by identifying the corresponding structure, material, or acts described in the specification to which the term will be limited." *Id.* (quotations and citations omitted).

Starting with the first step, Defendant argues that Dr. Thornton's unrebutted testimony explains that a POSITA would not have understood "communication manager" as a "term of art identifying a particular structure or class of structures," and that there is "no particular class of structures that implements the generic function of managing communications that would be recognized by a [POSITA]." Docket No. 107 at 22–23 (citing Docket No. 107-1 at ¶¶ 77–78). Defendant contends that its position is supported by case law considering similar situations interpreting "manager." Docket No. 107 at 23 (citing, *e.g.*, *Blackboard, Inc. v. Desire2Learn, Inc.*, 574 F.3d 1371, 1383 (Fed. Cir. 2009)).

In the context of the intrinsic evidence, the Court agrees with Defendant that the term "communication manager" does not connote sufficiently definite structure. The term "communication manager" is defined only by the function that it performs. Specifically, the "communication manager" performs "the function of managing communications between different modules, untied to any particular structure." A POSITA would not understand the surrounding claim language as identifying any specific structure of "communication manager" to perform this recited function. Docket No. 107-1 at ¶ 77.

Moreover, the specification uses the terms "communication manager" and "communication managing means" interchangeably. Indeed, Plaintiff argues this very point. Docket No. 98 at 23 n.2 ("The '449 Patent uses the terms "communication manager" and "communication managing means" interchangeably."). Thus, a POSITA would understand that the specification uses the terms "communication manager" and "communication managing means" as synonyms. Docket No. 98-7 at ¶ 159. Accordingly, Defendant has rebutted the presumption that § 112, ¶ 6 does not apply to the term "communication manager" in the '449 Patent.

"The first step in construing [a means-plus-function] limitation is a determination of the function of the means-plus-function limitation." *Medtronic*, 248 F.3d at 1311. The Court finds, that the recited function is "forwarding a request to a resource manager." Having determined the limitation's function, "the next step is to determine the corresponding structure disclosed in the specification and equivalents thereof." *Id.*

As recited in Claim 10, a first module issues a request for a connection with the second module to a communication manager. The specification illustrates a System on chip that includes a "communication manager (CM)" or "communication managing means (CM)" in Figure 3.

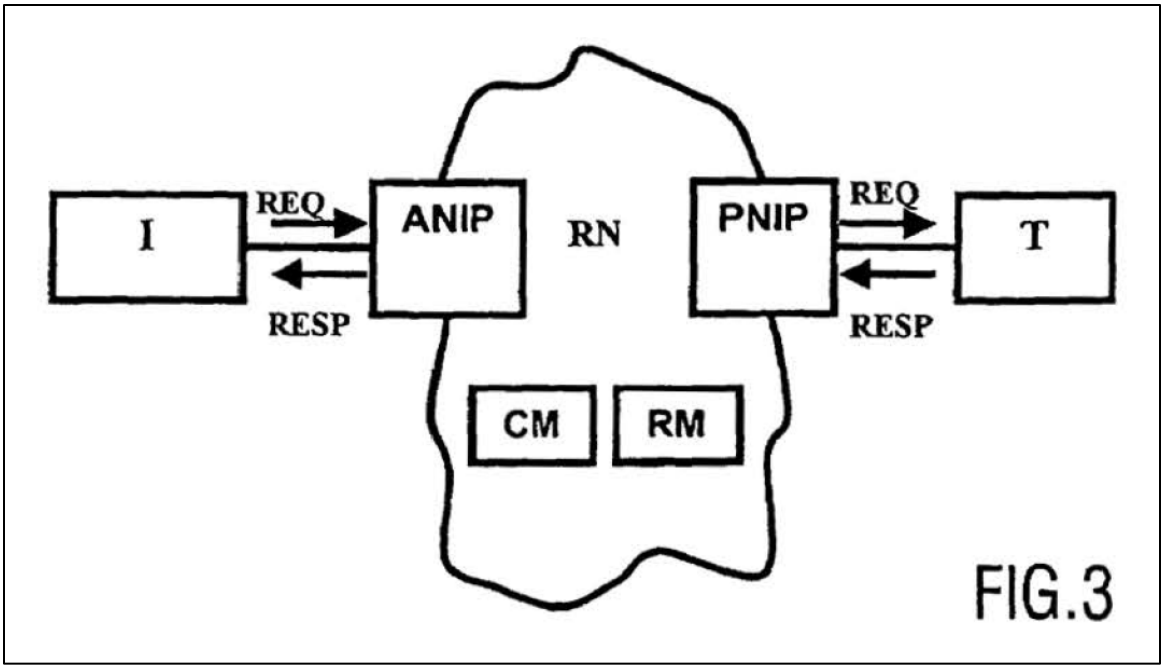


’818 Patent at Figure 3. In describing Figure 3, the specification identifies the corresponding structure of the communication manager as follows:

> The communication manager CM request a connection with a set of properties between two modules from the resource manager RM, after receiving the request REQ from the active network interface ports ANIP, i.e. the properties of a connection, e.g. throughput, flow control, are to be requested when asking for a connection setup.
>
> . . .
>
> After enquiring of the available connection properties, the resource manager RM reserves the available connection i.e. the required resources, and responds to the communication manager CM which connection is available, i.e. which connection properties or the required resources thereof are available for the desired channels. Optionally, the communication manager CM can accept the connection with the available properties, but on the other hand the communication manager CM may also refuse the offered connection if the available properties or the resources thereof are not acceptable. If the communication manager CM refuses the offered connection, it sends an error message to the initiator module I (i.e. via the ANIP) and requests the resource module RM to release the reservation of said connections.

’449 Patent at 10:19–24, 10:41–54. Accordingly, the Court finds that the corresponding structure is the portion of the circuit configured to implement the scheme disclosed in the ’449 Patent at 10:19–24 and 10:41–54.

Plaintiff argues that the specification discloses "said integrated circuit comprises at least one communication managing means." Docket No. 98 at 23 (citing '449 Patent at 7:35–38). Plaintiff contends that a "communication manager" comprised in an integrated circuit must be a circuit element of the integrated circuit. Docket No. 98 at 24. Plaintiff further argues that the '449 Patent discloses that the "communication manager" is arranged in a "network," a "router network," or a "network interface means," which are themselves comprised in an "integrated circuit." *Id.* (citing Docket No. 98-7 at ¶ 161 (citing '449 Patent at 9:66–10:6, 1:7–11, 7:15–18, 8:7–11, 9:17–21)).

Plaintiff's argument is not persuasive because, once again, Plaintiff's argument is not based on the disputed claim language, but instead is based on the term: "integrated circuit." *See supra* Sections V.C–D. As discussed, the mere fact that the communication manager is part of the integrated circuit "does not automatically render the limitation itself sufficiently structural." *Egenera*, 972 F.3d at 1374. The question for the Court is "whether the claim term recites sufficient structure to perform the claimed functions." *Id.* Here, the Court finds that it does not. Accordingly, the Court rejects Plaintiff's proposed structure.

In light of the intrinsic and extrinsic evidence, the Court finds that the phrase is governed by 35 U.S.C. § 112, ¶ 6, and construes the phrase **"communication manager"** as follows:

> **Function:** forwarding a request to a resource manager.
>
> **Corresponding Structure:** portion of the circuit configured to implement the scheme disclosed in the '449 Patent at 449 at 10:19–24, 10:41–54.

### F. "resource manager determining whether a target connection with the desired connection properties is available"

| Disputed Term | Plaintiff's Proposal | Defendant's Proposal |
|---|---|---|
| "resource manager determining whether a target connection with the desired connection properties is available" | "resource manager" means "circuit that manages network resources." The remaining parts of this term should be afforded their plain and ordinary meanings. | "resource manager determining whether a target connection with the desired connection properties is available, where the resource manager is not an arbiter that selects the output based on input priorities" |

The phrase "resource manager determining whether a target connection with the desired connection properties is available" appears in Asserted Claims 10, 14 and 15 of the '449 Patent. The Court finds that the phrase is used consistently in the claims and is intended to have the same general meaning in each claim. The parties dispute whether the resource manager is precluded from being an "an arbiter that selects the output based on input priorities."[11]

Defendant's construction is based entirely on an alleged prosecution disclaimer. Defendant argues that during prosecution of the '449 Patent the examiner rejected a pending claim[12] over U.S. Patent Pub. No. 2004/0103230 ("Emerson"), identifying an "arbiter" in Emerson as teaching a "resource managing means (RM)." Docket No. 107 at 26 (citing Docket No. 107-1 at ¶ 88). Defendant contends that the patentees distinguished the operation of Emerson's arbiter 132 from the claimed invention. Docket No. 107 at 27 (citing Docket No. 107-2 at 7–8).

Defendant further argues that the patentees "introduced a new limitation (appearing in issued Claim 10) that the resource manager must 'determine[] whether a target connection with the desired connection properties is available,' and argued that Emerson's arbiter 'does not

[11] The parties' respective arguments for this disputed term can be found at Docket Nos. 98 at 26–29, 110 at 9–10 and Docket No. 107 at 26–28.

[12] The pending claim became asserted Claim 10 in the '449 Patent.

disclose or suggest' the claimed feature." Docket No. 107 at 27 (citing Docket No. 107-2 at 8). Defendant contends that the patentees distinguished the claimed "resource manager" from the "priority-based protocols" of Emerson's arbiter. *Id*. According to Defendant, the Court should "construe the claim to reflect the applicant's unambiguous disclaimer of Emerson's priority based arbiter." *Id.*

The Court finds that the patentees did not clearly and unmistakably argue that "the resource manager is not an arbiter that selects the output based on input priorities," as Defendant proposes. Instead, the patentees amended the claims to recite the resource manager determines "whether a target connection with the desired connection properties is available." The following is the amended claims from the prosecution history, with amendments underlined.

> 7. (Currently Amended) Method for exchanging messages in an integrated circuit comprising a plurality of modules, the messages between the modules being exchanged over connections via a network, wherein said connections comprises a set of communication channels each having a set of connection properties, any communication channel being independently configurable, wherein said connection through the network supports transactions comprising at least one of outgoing messages from the first module to the second module and return messages from the second module to the first module <u>and further comprising the steps of:</u>

Docket No. 107-2 at 4.

> the first module issuing a request for a connection with the second module to a communication manager, wherein the request comprises desired connection properties associated with the sets of communication channels;
>
> the communication manager forwarding the request to a resource manager;
>
> the resource manager determining whether a target connection with the desired connection properties is available;
>
> the resource manager responding with the availability of the target connection to the communication manager; and
>
> the target connection between the first and second module being established based on the available properties of said communication channels of said connection.

Docket No. 107-2 at 5 (highlight added). Along with the amendments, the patentees argued that arbiter 112 of Emerson does not disclose or suggest this limitation as follows:

> The Arbiter 112 of Emerson does not disclose or suggest the features of claim 1 which include the resource manager determining whether the at least one connection with the communication channels is available based on the connection properties being available and the features of claim 7 which include the first module issuing a request for a connection with the second module to a communication manager, the resource manager determining whether a target connection with the desired connection properties is available, and the resource manager responding with the availability of the target connection to the communication manager.

*Id.* at 8 (highlight added). As indicated, the patentees explicitly added the distinguishing feature to the claims. Contrary to Defendant's contention, the patentees did not clearly and unmistakably argue that the resource was not an arbiter. Instead, the patentees argued that the arbiter in Emerson did not disclose the limitation explicitly added to the claim. Indeed, in the reason for allowance the examiner explained that the claim was allowable over the prior art (including Emerson) because it "do[es] not teach wherein the resource manager determines whether the at least one connection

with the communication channels is available based on the connection properties being available." Docket No. 98-7 at ¶ 152 (quoting prosecution history).

As discussed above, this is the limitation that is explicitly recited in Claim 10. The patentees' arguments were not a clear and unmistakable disclaimer as Defendant contends, but instead were explaining the claim amendments. *MIT v. Shire Pharmaceuticals, Inc.*, 839 F.3d 1111, 1119 (Fed. Cir. 2016) (prosecution history disclaimer must be "clear and unmistakable" such that where disavowal is ambiguous or amenable to multiple interpretations, prosecution history disclaimer does not attach). In summary, the patentees did not clearly and unmistakably argue that the resource manager "is not an arbiter that selects the output based on input priorities." Instead, the patentees argued that the prior art failed to disclose the limitation added to the claim.

Turning to Plaintiff's construction, the Court does not adopt it because the claim language is unambiguous, is easily understandable by a jury, and should be given its plain and ordinary meaning.[13] *Aventis Pharms., Inc. v. Amino Chems. Ltd.*, 715 F.3d 1363, 1373 (Fed. Cir. 2013) ("There is a heavy presumption that claim terms are to be given their ordinary and customary meaning."). Indeed, Defendant's construction is the claim language with the alleged disclaimer added to the end of it. Thus. the Court has resolved the parties' claim construction dispute related to this phrase. *O2 Micro Int'l Ltd. v. Beyond Innovation Tech. Co.*, 521 F.3d 1351, 1362 (Fed. Cir. 2008) ("[D]istrict courts are not (and should not be) required to construe every limitation present in a patent's asserted claims.").

For these reasons, **"resource manager determining whether a target connection with the desired connection properties is available"** is given its **plain and ordinary meaning.**

[13] During the claim construction hearing, Plaintiff agreed with the Court's preliminary finding that the phrase should be given its plain and ordinary meaning. Docket No. 135 at 65:17–20.

### G. "interconnect means"

| Disputed Term | Plaintiff's Proposal | Defendant's Proposal |
|---|---|---|
| "interconnect means" | "multi-hop interconnection between modules separated by one or more network nodes" | Plain and ordinary meaning. Not subject to Section 112 ¶ 6. |

The term "interconnect means" appears in Asserted Claim 6 of the '052 Patent. Although the term includes the word "means," the parties agree that the term is not subject to Section 112 ¶ 6. The parties dispute whether the term "interconnect means" requires construction.[14] The parties' dispute for this term is the same as for the disputed term "network." [15]

Defendant argues that the term "interconnect means" should be afforded its plain and ordinary meaning of structure that couples various processing modules. Docket No. 107 at 33 (citing '052 Patent at 1:6–10, 3:15–22, 3:51–54, 4:1–7; Docket No. 170-1 at ¶ 135). Defendant contends that Plaintiff's construction imports unnecessary limitations that contradict the specification. *Id.* at 33–34 (citing '052 Patent at 4:46–50; 1:48–58). Defendant further contends that the patentees broadly claimed the "interconnect means." *Id.* at 34.

The Court finds that the term "interconnect means" should be construed the same as the term "network." First, the patentees used the term "interconnect means" and the term "network" interchangeably in the specification. The specification and claims identify the "network" and "interconnect means" as "N." '052 Patent at Abstract ("interconnect means (N)"), 5:13–24 ("network N"), 6:62 ("network N"); 10:25 ("interconnect means (N)").

[14] The parties' respective arguments for this disputed term can be found at Docket Nos. 98 at 14–15, 110 at 13 and Docket No. 107 at 33–34.

[15] The parties agree that network and interconnect means rely on the same arguments and should be construed synonymously. Docket No. 135 at 27:19–25, 32:17–33:1, 33:19–24.

Likewise, the term "network" and "interconnect means" are used interchangeably in the related patents. For example, Figure 1 of the '818 Patent and Figure 1 of the '052 Patent identify "network N."

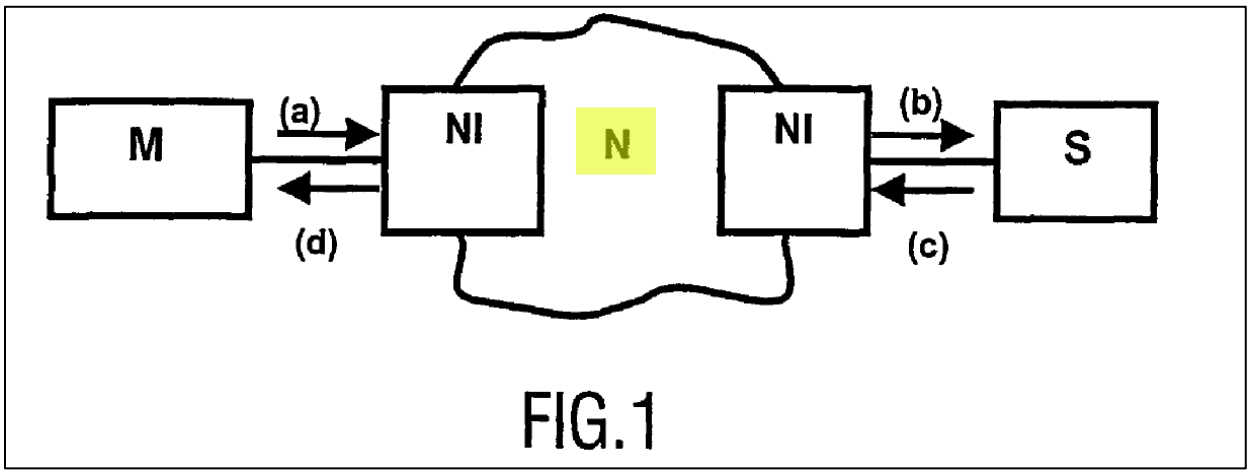


'818 Patent at Figure 1 (highlight added).

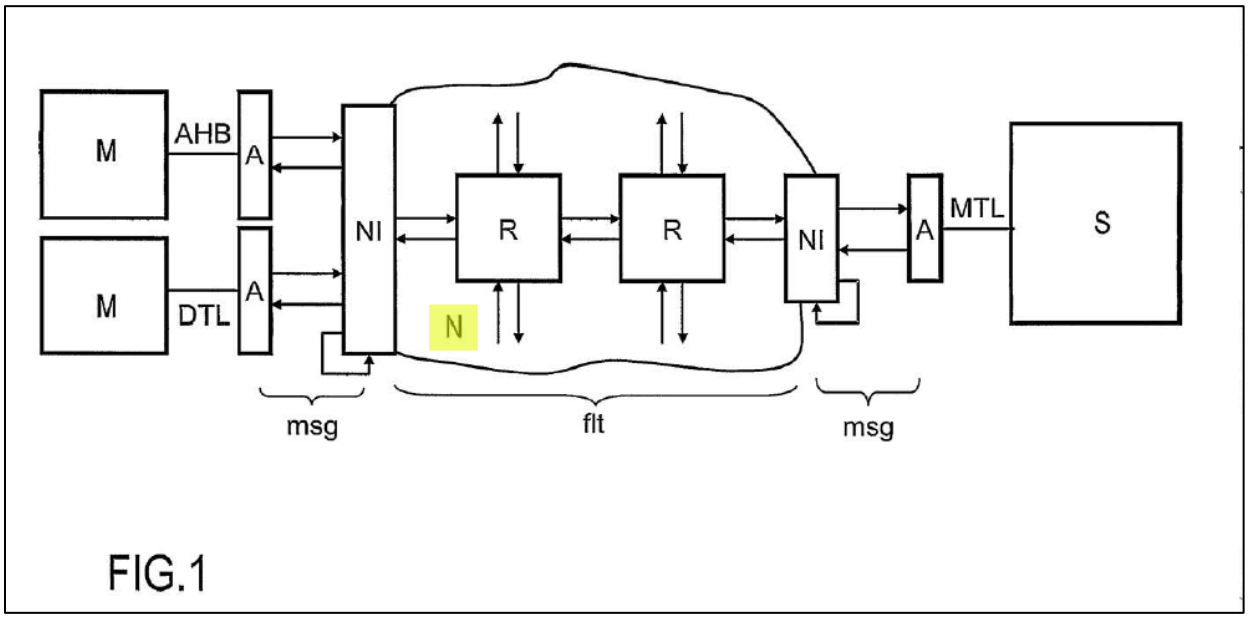


'052 Patent at Figure 1 (highlight added). Similarly, the Field of the Invention section in the '052 Patent replaces "network" in the '818 Patent with "interconnect means," and the Abstracts do the same.

FIELD OF THE INVENTION

The invention relates to an integrated circuit having a plurality of processing modules and an interconnect means for coupling said plurality of processing modules and a method for communication service mapping in such an integrated circuit.

’052 Patent at 1:4–10 (highlight added).

FIELD OF THE INVENTION

The invention relates to an integrated circuit having a plurality of processing modules and a network arranged for providing connections between processing modules and a method for exchanging messages in such an integrated circuit.

’818 Patent at 1:6–12 (highlight added)

nication service identification. Furthermore, an interconnect means (N) is provided for coupling said plurality of processing modules (M, S) and for enabling a connection based communication having a set of connection properties. At least

’052 Patent at Abstract (highlight added)

(57) **ABSTRACT**

An integrated circuit comprising a plurality of processing modules M, S and a network N; RN arranged for providing at least one connection between a first and at least one second module M, S is provided. Said connection supports

’818 at Abstract (highlight added). Thus, the intrinsic evidence indicates that the patentees used the term “network” and “interconnect means” interchangeably. Therefore, any description of the “network” in the specification of the ’052 Patent applies equally to the “interconnect means.”

Specifically, the relevant portions of the Background Section regarding the claimed "network" (*i.e.*, the interconnect means N) are as follows. In the Background section, the specification states that "[i]n conventional processing systems the systems modules usually communicate to each other via a bus," and that "[a]s the number of modules increases however, *this way of communication is no longer practical* for the following reasons." '052 Patent at 1:25–29 (emphasis added); *see also* '818 Patent at 1:27–31. The specification further explains that this impracticality is because "the large number of modules forms a too high bus load [and] the bus forms a communication bottleneck as it enables only one device to send data to the bus." '818 Patent at 1:31–34; '052 Patent at 1:29–32. "[T]o overcome these disadvantages," the specification states that "[n]etworks on chip (NoC) have received considerable attention recently as a solution to the interconnect problem in highly-complex chips." '052 Patent at 1:33–36; *see also* '818 Patent at 1:35–39.

The specification further contrasts "[u]sing networks for on-chip communication when designing systems on chip (SoC)" to "existing on-chip interconnects (e.g., buses, switches, or point-to-point wires), where the communicating modules are *directly* connected." '052 Patent at 1:48–54 (emphasis added); *see also* '818 Patent at 1:51–57. The specification discloses that "in a NoC the modules communicate remotely via network nodes." '052 Patent at 1:48–54; *see also* '818 Patent at 1:51–57. The specification further describes a number of differences between NoC and off-chip networks. '052 Patent at 1:54–2:31; '818 Patent at 1:57–3:35. Importantly, the specification describes the recited "network" as a "radical change" by using the claimed networks as on-chip interconnects. Specifically, the specification states the following:

> Introducing networks as on-chip interconnects *radically changes* the communication when compared to direct interconnects, such as buses or switches. *This is because of the multi-hop nature of a network, where communication modules are not directly connected, but separated by one or more network nodes*.

> *This is in contrast with the prevalent existing interconnects (i.e., buses) where modules are directly connected.*

'052 Patent at 2:32–39 (emphasis added); '818 Patent at 3:36–43. Accordingly, the Court finds that the specification discloses a specific "network" (*i.e.*, "interconnect means") that includes a specific configuration.

Defendant's contention that the plain and ordinary meaning of "interconnect means" is "a class of structures that couple the processing modules of an integrated circuit" would be inconsistent with the intrinsic evidence. Docket No. 107 at 33 (citing Docket No. 107-1 at ¶ 135). For example, it would include the "existing on-chip interconnects (e.g., buses, switches, or point-to-point wires), where the communicating modules are directly connected," which were described by the patentees as no longer practical. '818 Patent at 1:31; '052 Patent at 1:28–29. It would also include the "off-chip" networks, which the patentee described as different from NoC for a number of reasons. '818 Patent at 1:67–3:35; '052 Patent at 1:64–2:31. Thus, the intrinsic evidence indicates that the term "interconnect means" should be construed to mean "multi-hop interconnection between modules separated by one or more network nodes."

During the claim construction hearing, Defendant argued that the Asserted Patents disclose networks comprising preexisting interconnect technologies. Defendant's Demonstrative Slides at 36 (citing '052 Patent at 4:46–50). The Court notes that Defendant's citation describes the components "within a network" that may be included on a "network on chip." However, this does not address the disclosed "radical change" of separating the modules by one or more nodes with multi-hop interconnection between them. '052 Patent at 2:32–39; '818 Patent at 3:36–43.

For the reasons set forth above, the Court construes the term **"interconnect means"** to mean **"multi-hop interconnection between modules separated by one or more network nodes."**

### H. "optimal amount of data to be buffered"

| Disputed Term | Plaintiff's Proposal | Defendant's Proposal |
|---|---|---|
| "optimal amount of data to be buffered" | Plain and ordinary meaning. | Indefinite. |

The phrase "optimal amount of data to be buffered" appears in Asserted Claim 12 of the '800 Patent. The parties dispute whether the phrase "optimal amount of data to be buffered" is indefinite.[16]

Under 35 U.S.C. § 112, a patent claim must "particularly point[] out and distinctly claim[] the subject matter" regarded as the invention. In particular, a claim, viewed in light of the specification and prosecution history, must "inform those skilled in the art about the scope of the invention with reasonable certainty." *Nautilus*, 572 U.S. at 899; *see also Interval Licensing*, 766 F.3d at 1371 ("The claims, when read in light of the specification and the prosecution history, must provide objective boundaries for those of skill in the art."). While a claim employing a "term[] of degree" may be definite "where it provide[s] enough certainty to one of skill in the art when read in the context of the invention," *Interval Licensing*, 766 F.3d at 1370, a term of degree that is "purely subjective" and depends "on the unpredictable vagaries of any one person's opinion" is indefinite. *Datamize, LLC v. Plumtree Software, Inc.*, 417 F.3d 1342, 1350–51 (Fed. Cir. 2005).

The Court finds that the phrase "optimal amount of data to be buffered" is purely subjective, and "fail[s] to inform, with reasonable certainty, those skilled in the art about the scope of the invention." *Nautilus*, 572 U.S. at 901. Here, a POSITA would understand the term "optimal" to mean "a calculated solution (e.g., a minimum or a maximum) to a provided or a known objective

[16] The parties' respective arguments for this disputed term can be found at Docket Nos. 98 at 34–35, 110 at 11–12 and Docket No. 107 at 28–31.

function." Docket No. 107-1 at ¶ 105 (citing 107-4 at 5 (*Optimal*, DICTIONARY OF COMPUTER SCIENCE ENGINEERING AND TECHNOLOGY (2001))).

Plaintiff cites to a similar definition of "optimum" to mean "[m]ost favorable or desirable." Docket No. 98 at 34 (citing Docket No. 98-11 at 28). These definitions indicate that what constitutes "optimal" in a particular system "depends upon the objective function and the parameters to be considered." Docket No. 107-1 at ¶ 105. However, "if the objective function is not clearly specified for a given set of parameters," arriving at an "optimal result" becomes "subjective." *Id.*

This is the problem with the disputed phrase in the context of the intrinsic evidence, because the specification only provides subjective guidance on how to determine the "optimal amount of data to be buffered." Docket No. 107-1 at ¶¶ 107–116. Specifically, the specification states that "determination of an optimal burst length" may be performed based on "communication or connection properties." '800 Patent at 6:63–7:2. The specification and claims provide a list of potential connection properties. '800 Patent at 5:27–35. However, the specification does not provide any indication to a POSITA what aspect or combination of these "connection properties" may facilitate the determination of an "optimal amount of data." Docket No. 107-1 at ¶ 115. Accordingly, determining an "optimal amount" is "purely subjective" and depends "on the unpredictable vagaries of any one person's opinion." *Datamize*, 417 F.3d at 1350–51.

The specification also refers to "sufficient amount[s]" of data, but this is only substituting one unrelated subjective term for another by referring to a "sufficient" amount of data. *See, e.g.*, '800 Patent at 3:47–49; ("data is buffered on the slave side until a sufficient large amount of data to be transferred . . . is reached."); *see also id.* at 4:50–52, 4:55–58, 7:16–19. To be clear, a "sufficient large amount of data" does not mean the same as "optimal amount of data." More

importantly, it provides no further clarity beyond, "optimal amount." Thus, Plaintiff's reliance on another subjective term appearing in the specification fails to provide objective boundaries for the term "optimal amount" to those of skill in the art.

Plaintiff argues that "a POSITA would understand that a 'first optimal amount of data to be buffered' equates to the amount of data that is optimal under certain conditions." Docket No. 98 at 34. This circular argument illustrates the problem, because contending that "optimal amount of data" is "the amount of data that is optimal" provides absolutely no objective boundaries for those of skill in the art.

Plaintiff also argues that "optimal amount of data to be buffered" is not indefinite because it is "not a fixed quantifier but based on certain conditions such as communication properties and/or interconnect characteristics." *Id.* As discussed above, the intrinsic evidence does not provide any indication what aspect or combination of these "connection properties" may facilitate the determination of an "optimal amount of data." *See, e.g.*, Docket No. at 107-1 at ¶ 115. Indeed, Dr. Thornton further notes that a POSITA would be "unable to identify how to weight [*sic*] these properties and utilize them together." Docket No. 107-1 at ¶ 116.

During the claim construction hearing, Plaintiff argued that it would be up to the intent of the chip and the designer of the chip to decide which of the criteria are more important, and how they interact with each other. *See* Docket No. 135 at 53:9–23. Plaintiff's argument illustrates why the term is indefinite because the intent of the designer of the chip is entirely subjective. Without a way to consider these "connection properties" collectively, a POSITA would have no way of determining what may or may not be the "optimal amount of data." *Id.* In other words, without some guidance as to how these properties work together, "[d]ifferent approaches to weighing or otherwise specifying the interactions . . . would also often lead to materially different results, i.e.,

different optimal values that are dependent upon the subjective decisions." *Id.* Accordingly, Defendant has shown with clear and convincing evidence that the phrase "optimal amount of data to be buffered" fails to provide a POSITA a way to determine whether or not the amount of data to be buffered is "optimal."

The phrase **"optimal amount of data to be buffered"** is indefinite for failing to inform, with reasonable certainty, those skilled in the art about the scope of the invention.

### I. "an optimal moment for sending the data"

| Disputed Term | Plaintiff's Proposal | Defendant's Proposal |
|---|---|---|
| "an optimal moment for sending the data" | Plain and ordinary meaning. | Indefinite. |

The phrase "an optimal moment for sending the data" appears in Asserted Claim 12 of the '800 Patent. The parties dispute whether the phrase "an optimal moment for sending the data" is indefinite.[17]

As discussed with the previous term, a patent claim must "particularly point[] out and distinctly claim[] the subject matter" regarded as the invention. 35 U.S.C. § 112. *See supra* Section V.H. In particular, a claim, viewed in light of the specification and prosecution history, must "inform those skilled in the art about the scope of the invention with reasonable certainty." *Nautilus*, 572 U.S. at 899; *see also Interval Licensing*, 766 F.3d at 1371. While a claim employing a "term[] of degree" may be definite "where it provide[s] enough certainty to one of skill in the art when read in the context of the invention," *Interval Licensing*, 766 F.3d at 1370, a term of degree that is "purely subjective" and depends "on the unpredictable vagaries of any one person's opinion" is indefinite. *Datamize*, 417 F.3d at 1350–51.

[17] The parties' respective arguments for this disputed term can be found at Docket Nos. 98 at 32–34, 110 at 12 and Docket No. 107 at 31–33.

The Court finds that the phrase "an optimal moment for sending the data" is purely subjective and "fail[s] to inform, with reasonable certainty, those skilled in the art about the scope of the invention." *Nautilus*, 572 U.S. at 901. A POSITA would need to look to the specification for further guidance to understand the scope of the term because "optimal moment for sending the data" is not a known term of art. Docket No. 107-1 at ¶¶ 117–120. Compared to the term "optimal amount," (*see supra* Section V.H.), the specification provides even less information. Indeed, the term "optimal moment" appears only in the claims.

At best, the specification provides a single sentence stating that "[b]esides the optimal burst length determination, also the *transmission moment* may be determined in a similar way by the first and second determination means BLDU1, BLDU2." '800 Patent at 7:4–6 (emphasis added). However, the specification does not say that this "transmission moment" is "optimal." Indeed, determining a "*moment* for sending the data" is not the same as determining "an *optimal moment* for sending the data." The Court disagrees that the "optimal moment" is simply when transmission occurs, as Plaintiff contends. Docket No. 98 at 33. This would read the term "optimal" completely out of the claim. Thus, a POSITA would lack sufficient guidance to understand the scope of this term. Docket No. 107-1 at ¶ 118.

Plaintiff argues that Claim 12 recites a list of "connection properties" used in determining the "optimal moment for sending the data." Docket No. 98 at 33. As discussed above for the term "optimal amount," the specification does not describe how a POSITA should understand how each "connection property" relates to a given "optimal moment for sending the data." Docket No. 107-1 at ¶ 120. Again, the specification does not explain how to reconcile competing properties that could yield materially different resulting "optimal" moments. *Id.* Accordingly, determining an "optimal moment" is "purely subjective" and depends "on the unpredictable vagaries of any one person's

opinion." *Datamize*, 417 F.3d at 1350–51.

Plaintiff further argues that the specification's discussion of a "transmission moment" "sufficiently disclose[s]" the "optimal moment." Docket No. 98 at 33 (citing '800 Patent at 7:4–14). This disclosure includes only one of Claim 12's listed connection properties (throughput), as well as a connection property not listed in Claim 12 (best effort). More importantly, this disclosure fails to resolve how to reconcile the different connection properties and does not provide "objective boundaries for those of skill in the art." *Intellectual Ventures I LLC v. T-Mobile USA, Inc.*, 902 F.3d 1372, 1381 (Fed. Cir. 2018) ("[M]erely understanding that 'optimiz[ing] . . . QoS' relates to the end-user experience 'fails to provide one of ordinary skill in the art with any way to determine whether' QoS has been 'optimiz[ed].' "). Accordingly, Defendant has shown with clear and convincing evidence that the phrase "an optimal moment for sending the data" fails to provide a POSITA a way to determine whether the moment for sending the data is "optimal."

The phrase **"an optimal moment for sending the data"** is indefinite for failing to inform, with reasonable certainty, those skilled in the art about the scope of the invention.

## VI. CONCLUSION

The Court **ORDERS** the following claim constructions of the agreed and disputed terms:

| TERM/PHRASE | COURT'S CONSTRUCTION |
|---|---|
| "connection properties"<br><br>'449 Patent: Claims 10, 13, 14, 15, 16<br>'052 Patent: Claim 6<br>'9893 Patent: Claims 4, 6, 8 | "properties of a connection, including ordering (data transport in order), flow control (a remote buffer is reserved for a connection, and a data producer will be allowed to send data only when it is guaranteed that space is available for the produced data), throughput (a lower bound on throughput is guaranteed), latency (upper bound for latency is guaranteed), the lossiness (dropping of data), transmission termination, transaction completion, data correctness, priority, or data delivery" |

| TERM/PHRASE | COURT'S CONSTRUCTION |
|---|---|
| "flow control"<br><br>'449 Patent: Claim 13<br>'9893 Patent: Claim 8<br>'800 Patent: Claim 12 | "controlling flow whereby a remote buffer is reserved for a connection, and a data producer will be allowed to send data only when it is guaranteed that space is available for the produced data" |
| Whether the preamble is a limitation ("Integrated circuit comprising . . . from the second modules to the first module" 12:5-16)<br><br>'818 Patent: Claim 1 | Limiting |
| Whether the preamble is a limitation ("Method for exchanging messages . . . the second module to the first module" 19:21-30)<br><br>'449 Patent: Claim 10 | Limiting |
| "at least one of a switch and a router"<br><br>'449 Patent: claim 11 | "at least one switch and at least one router" |
| Whether the preamble is a limitation ("Method of communication service mapping . . . second processing modules (S)" 10:7-18)<br><br>'052 Patent: Claim 6 | Limiting |
| Whether the preamble is a limitation ("A method . . . or a register address" 12:40-53)<br><br>'9893 Patent: Claim 4 | Limiting |
| Whether the preamble is a limitation ("A method of designing circuits . . . via a network interface" 12:22-33)<br><br>'2893 Patent: Claim 10 | Limiting |
| "network"<br><br>'818 Patent: Claims 1, 2<br>'449 Patent: Claims 10-12, 14<br>'9893 Patent: Claims 4, 11<br>'2893 Patent: Claim 10<br>'800 Patent: Claim 12 | "multi-hop interconnection between modules separated by one or more network nodes" |

| TERM/PHRASE | COURT'S CONSTRUCTION |
|---|---|
| "integrated circuit"<br><br>'818 Patent: Claims 1-3, 5-7<br>'449 Patent: Claim 10<br>'052 Patent: Claims 6<br>'9893 Patent: Claim 4<br>'2893 Patent: Claim 1, 10<br>'800 Patent: Claim 12 | "a combination of interconnected circuit elements inseparably associated on or within a continuous substrate" |
| "dropping means (DM) for dropping data exchanged by said first and second module (M, S)"<br><br>'818 Patent: Claims 1, 3, 5 | Subject to Section 112 ¶ 6.<br><br>**Function:**<br>Claim 1: "dropping data exchanged by first and second module (M, S)<br><br>Claim 3: "create an error message if data is dropped"<br><br>Claim 5: "send said error message to said first module"<br><br>**Structure:** portion of the circuit configured to implement the scheme disclosed in the '818 Patent at 7:45–56, 8:38–40, 8:64–9:10. |
| "interface means (ANIP, PNIP) for managing the interface between a module (M, S) and the network (N, RN) wherein said interface means (ANIP, PNIP) comprises a first dropping means (DM) for dropping data, and wherein the dropping of data and therefore the transaction completion can be controlled by the interfaces means"<br><br>'818 Patent: Claims 1, 6, 7 | Subject to Section 112 ¶ 6<br><br>**Function:**<br>Claim 1: "managing the interface between a module (M, S) and a network (N, RN) and controlling dropping of data and transaction completion"<br><br>Claim 6: "store received error messages"<br><br>Claim 7: "not drop error messages"<br><br>**Structure:**<br>portion of the circuit configured to implement the scheme disclosed in the '818 Patent at 7:57–8:63, 9:10–49. |

| TERM/PHRASE | COURT'S CONSTRUCTION |
|---|---|
| "communication manager"<br><br>'449 Patent: Claims 10-16 | Subject to Section 112 ¶ 6.<br><br>**Function:** forwarding a request to a resource manager<br><br>**Structure:** portion of the circuit configured to implement the scheme disclosed in the '449 Patent at 10:19–24, 10:41–54. |
| "resource manager determining whether a target connection with the desired connection properties is available"<br><br>'449 Patent: Claims 10-16 | Plain and ordinary meaning. |
| "interconnect means"<br><br>'052 Patent: Claim 6 | "multi-hop interconnection between modules separated by one or more network nodes" |
| "optimal amount of data to be buffered"<br><br>'800 Patent: Claim 12 | Indefinite |
| "an optimal moment for sending the data"<br><br>'800 Patent: Claim 12 | Indefinite |

The Court **ORDERS** each party not to refer, directly or indirectly, to its own or any other party's claim-construction positions in the presence of the jury. Likewise, the Court **ORDERS** the parties to refrain from mentioning any part of this opinion, other than the actual positions adopted by the Court, in the presence of the jury. Neither party may take a position before the jury that contradicts the Court's reasoning in this opinion. Any reference to claim construction proceedings is limited to informing the jury of the positions adopted by the Court.

**So ORDERED and SIGNED this 3rd day of January, 2024.**

Robert W Schroeder III

ROBERT W. SCHROEDER III
UNITED STATES DISTRICT JUDGE