US008786133B2

(12) **United States Patent**
Cheng et al.

(10) **Patent No.: US 8,786,133 B2**
(45) **Date of Patent: Jul. 22, 2014**

(54) **SMART AND SCALABLE POWER INVERTERS**

(75) Inventors: **George Shu-Xing Cheng**, Folsom, CA (US); **Steven L. Mulkey**, Cameron Park, CA (US)

(73) Assignee: **CyboEnergy, Inc.**, Rancho Cordova, CA (US)

(*) Notice: Subject to any disclaimer, the term of this patent is extended or adjusted under 35 U.S.C. 154(b) by 693 days.

(21) Appl. No.: **12/837,162**

(22) Filed: **Jul. 15, 2010**

(65) **Prior Publication Data**

US 2011/0012430 A1 Jan. 20, 2011

Related U.S. Application Data

(60) Provisional application No. 61/226,141, filed on Jul. 16, 2009.

(51) **Int. Cl.**
H02J 1/00 (2006.01)

(52) **U.S. Cl.**
USPC **307/82**

(58) **Field of Classification Search**
USPC 307/82
See application file for complete search history.

(56) **References Cited**

U.S. PATENT DOCUMENTS

5,903,116	A	5/1999	Geis
6,031,294	A	2/2000	Geis
6,055,524	A	4/2000	Cheng
6,192,668	B1	2/2001	Mackay
6,265,786	B1	7/2001	Bosley
6,325,142	B1	12/2001	Bosley
6,360,131	B1	3/2002	Cheng
6,381,944	B2	5/2002	Mackay
6,487,096	B1	11/2002	Gilbreth
6,495,929	B2	12/2002	Bosley
6,556,980	B1	4/2003	Cheng
6,612,112	B2	9/2003	Gilbreth
6,684,112	B1	1/2004	Cheng
6,684,115	B1	1/2004	Cheng
6,784,565	B2	8/2004	Wall
6,870,279	B2	3/2005	Gilbreth
6,958,550	B2	10/2005	Gilbreth
6,960,840	B2	11/2005	Willis
7,016,743	B1	3/2006	Cheng

(Continued)

FOREIGN PATENT DOCUMENTS

JP 09275637 A * 10/1997

OTHER PUBLICATIONS

Rashid H. Muhammad, Power Electronics Handbook, 2007, Academic Press.

(Continued)

Primary Examiner — Daniel Cavallari
(74) *Attorney, Agent, or Firm* — DLA Piper LLP (US)

(57) **ABSTRACT**

A method and apparatus is disclosed for intelligently inverting DC power from DC sources such as photovoltaic (PV) solar modules to single-phase or three-phase AC power to feed the power grid for electricity generation. A number of smart single-input, dual-input, triple-input, quad-input, and multiple-input power inverters in a mixed variety can easily connect to single, dual, triple, quad, and multiple DC power sources, invert the DC power to AC power, and daisy chain together to generate a total power, which is equal to the summation of the AC power supplied by each smart and scalable power inverter of this invention.

24 Claims, 15 Drawing Sheets

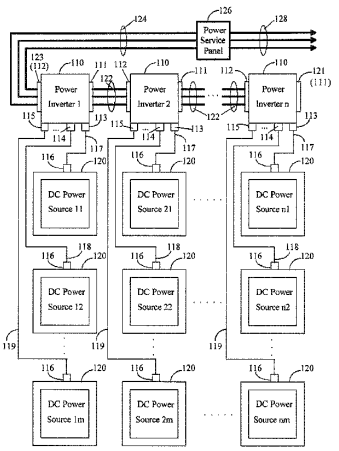

(56) **References Cited**

U.S. PATENT DOCUMENTS

7,142,626	B2	11/2006	Cheng	
7,152,052	B2	12/2006	Cheng	
7,415,446	B2	8/2008	Cheng	
2001/0052704	A1	12/2001	Bosley	
2002/0073713	A1	6/2002	Mackay	
2002/0099476	A1	7/2002	Hamrin	
2002/0166324	A1	11/2002	Willis	
2003/0007369	A1	1/2003	Gilbreth	
2003/0111103	A1 *	6/2003	Bower et al.	136/244
2004/0103669	A1	6/2004	Willis	
2004/0119291	A1	6/2004	Hamrin	
2004/0135436	A1	7/2004	Gilbreth	
2004/0264225	A1	12/2004	Bhavaraju	
2008/0111517	A1	5/2008	Pfeifer	
2008/0283118	A1 *	11/2008	Rotzoll et al.	136/251
2009/0000654	A1	1/2009	Rotzoll	
2009/0159113	A1	6/2009	Morimoto	
2009/0160258	A1	6/2009	Allen et al.	
2010/0202177	A1	8/2010	Kajouke	
2010/0237703	A1 *	9/2010	Stern	307/77
2011/0012430	A1	1/2011	Cheng	
2011/0273022	A1 *	11/2011	Dennis et al.	307/72
2012/0025618	A1 *	2/2012	Erickson et al.	307/77

OTHER PUBLICATIONS

R. Jones. "The Measurement of Lumped Parameter Impedence: A Metrology Guide," University of Michigan, Jan. 1974.

International Preliminary Report on Patentability issued in PCT/US2010/042123 on Jan. 26, 2012.

Related U.S. Appl. No. 13/397,402 electronically captured on Jun. 15, 2012.

Related U.S. Appl. No. 13/493,622 electronically captured on Jun. 15, 2012.

Maniktala, Sanjaya., "Switching Power Supplies A to Z," Elsevier, 2006.

International Search Report issued in PCT/US2010/042123 mailed Feb. 22, 2011.

Written Opinion issued in PCT/US2010/042123 mailed Feb. 22, 2011.

International Search Report and Written Opinion issued in PCT/US2012/041923 on Jan. 17, 2013.

Related U.S. Appl. No. 13/397,407 electronically captured on Apr. 17, 2013.

* cited by examiner

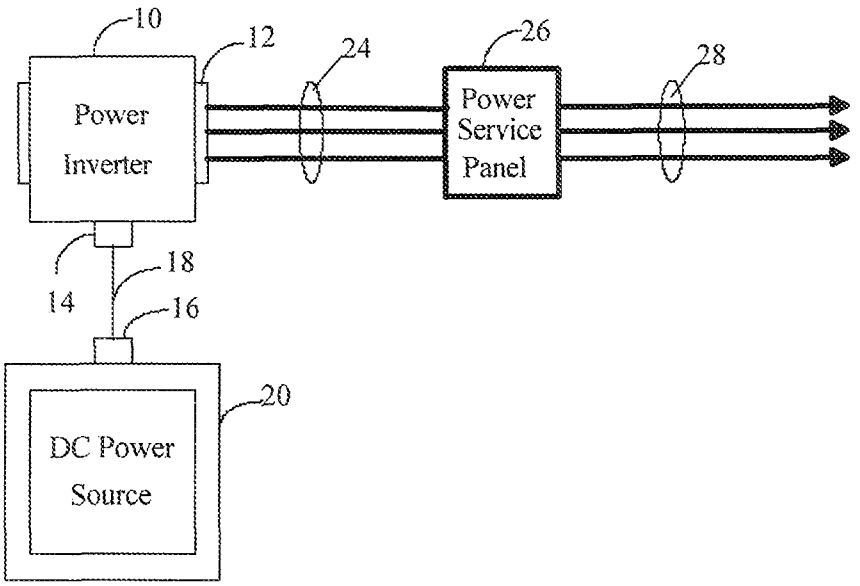
10
12
24
26
28
Power
Inverter
Power
Service
Panel
14
18
16
20
DC Power
Source

Fig. 1

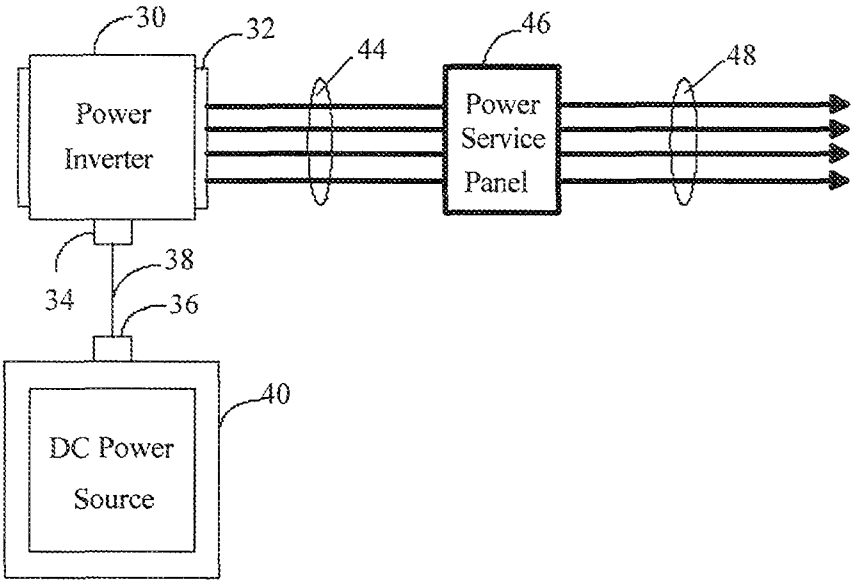
30
32
44
46
48
Power
Inverter
Power
Service
Panel
34
38
36
40
DC Power
Source

Fig. 2

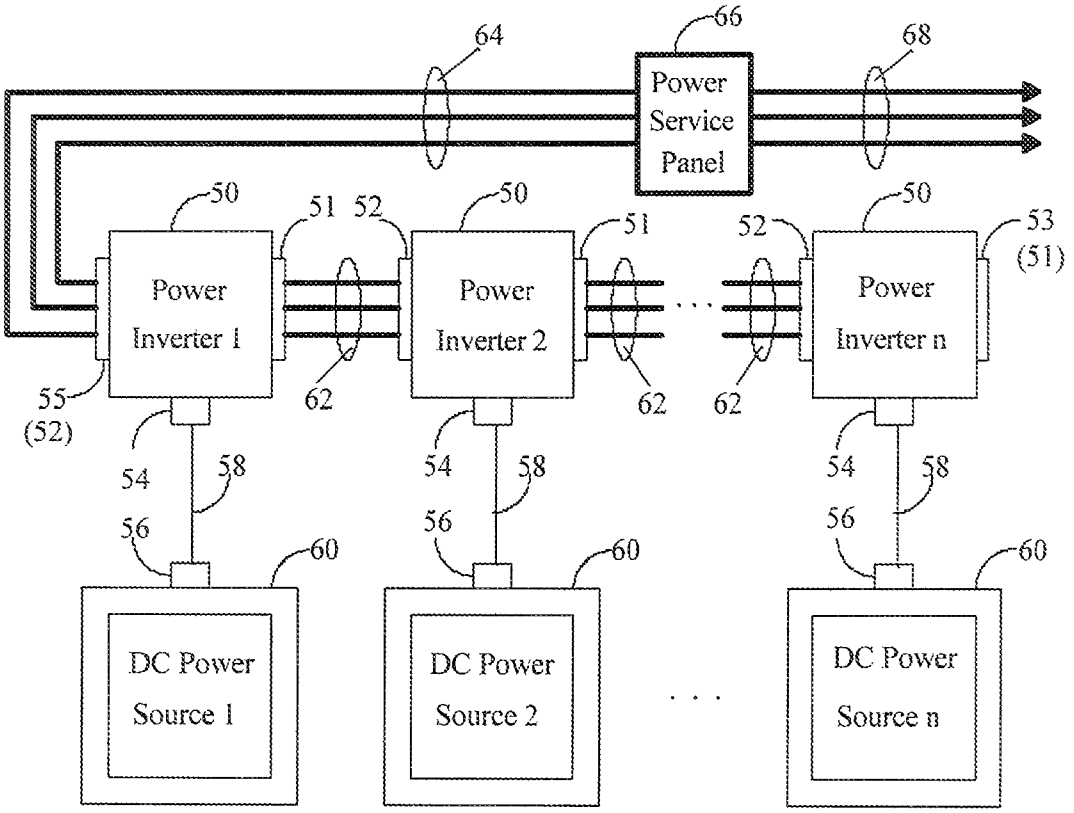
64
66
68
Power
Service
Panel
50
51
52
50
51
52
50
53
(51)
Power
Inverter 1
Power
Inverter 2
Power
Inverter n
55
(52)
62
62
62
54
58
54
58
54
58
56
56
56
60
60
60
DC Power
Source 1
DC Power
Source 2
DC Power
Source n

Fig. 3

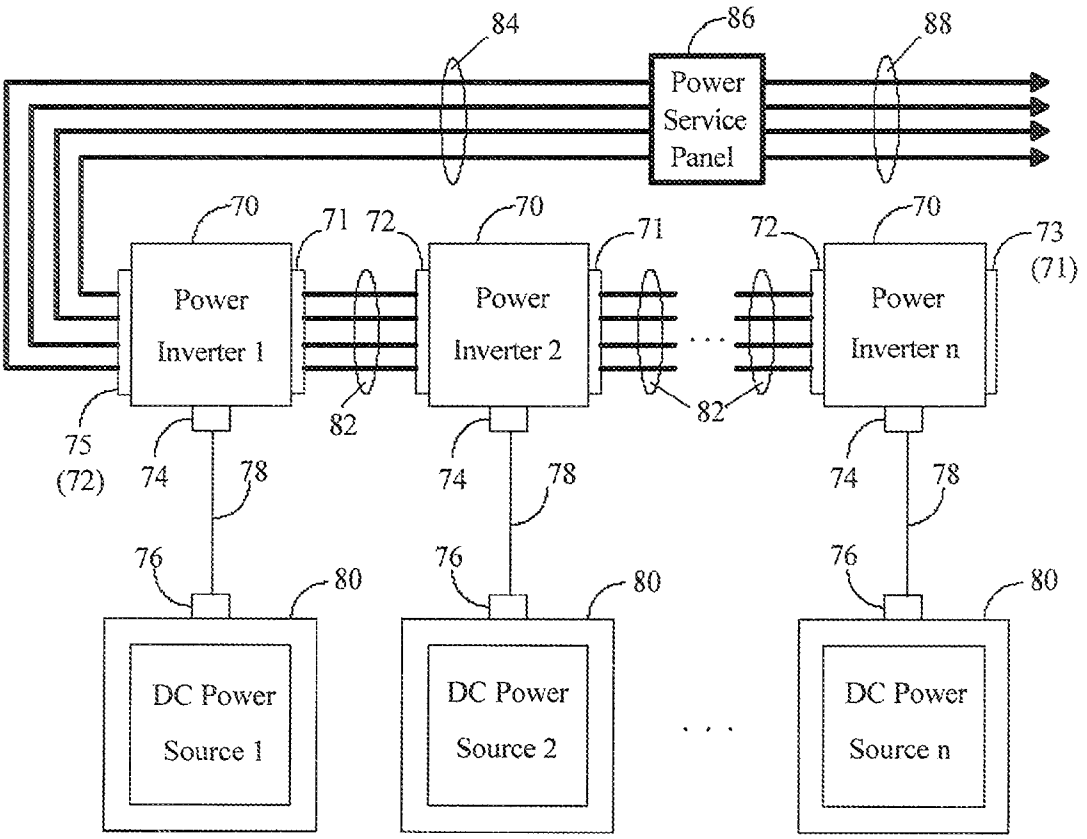
84
86
88
Power Service Panel
70
71
72
73 (71)
Power Inverter 1
Power Inverter 2
Power Inverter n
82
75 (72)
74
78
76
80
DC Power Source 1
DC Power Source 2
DC Power Source n

Fig. 4

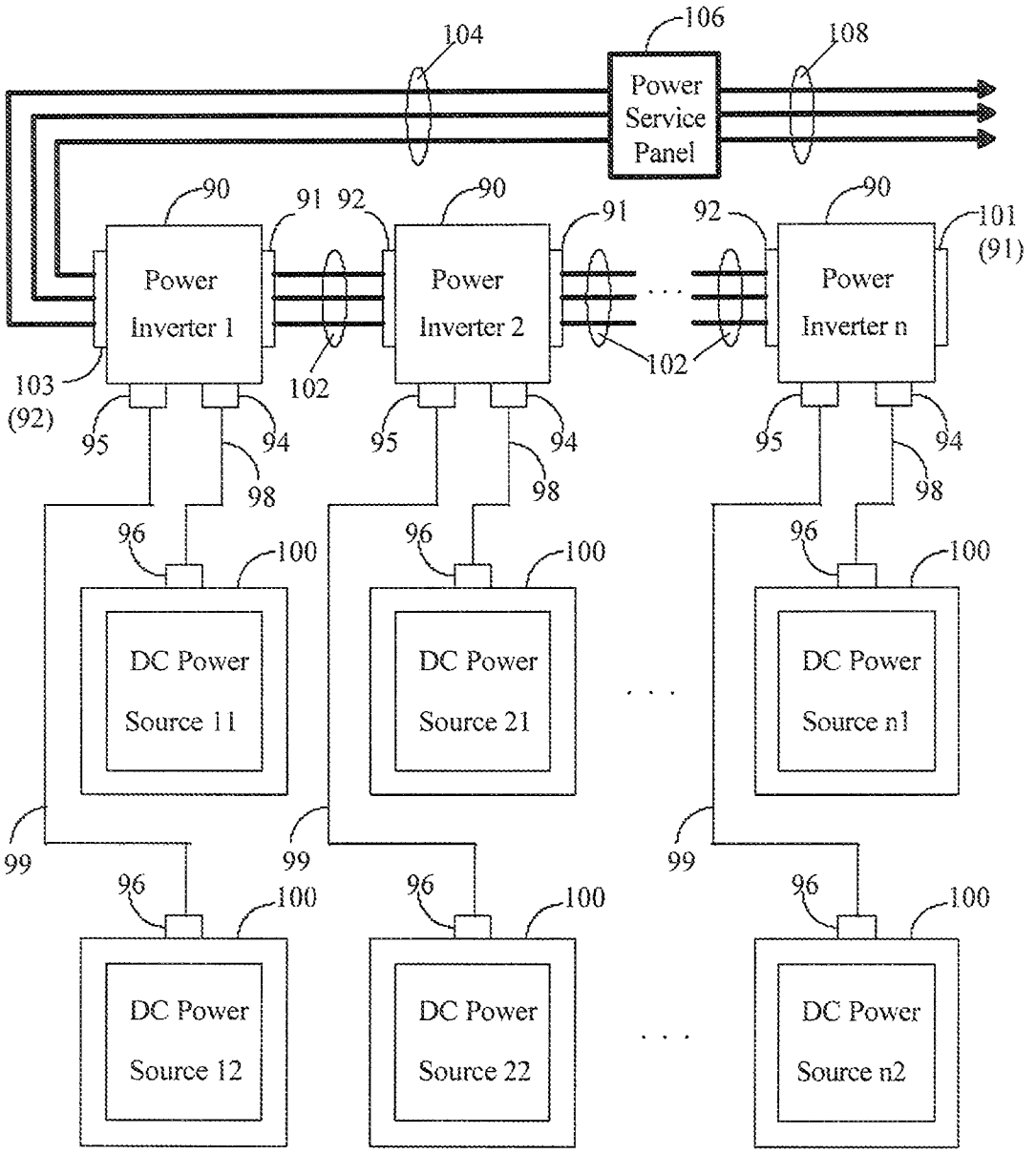
104
106
108
Power Service Panel
90
91 92
90
91
92
90
101 (91)
Power Inverter 1
Power Inverter 2
Power Inverter n
103 (92)
102
102
95
94
98
95
94
98
95
94
98
96
100
96
100
96
100
DC Power Source 11
DC Power Source 21
DC Power Source n1
99
99
99
96
100
96
100
96
100
DC Power Source 12
DC Power Source 22
DC Power Source n2

Fig. 5

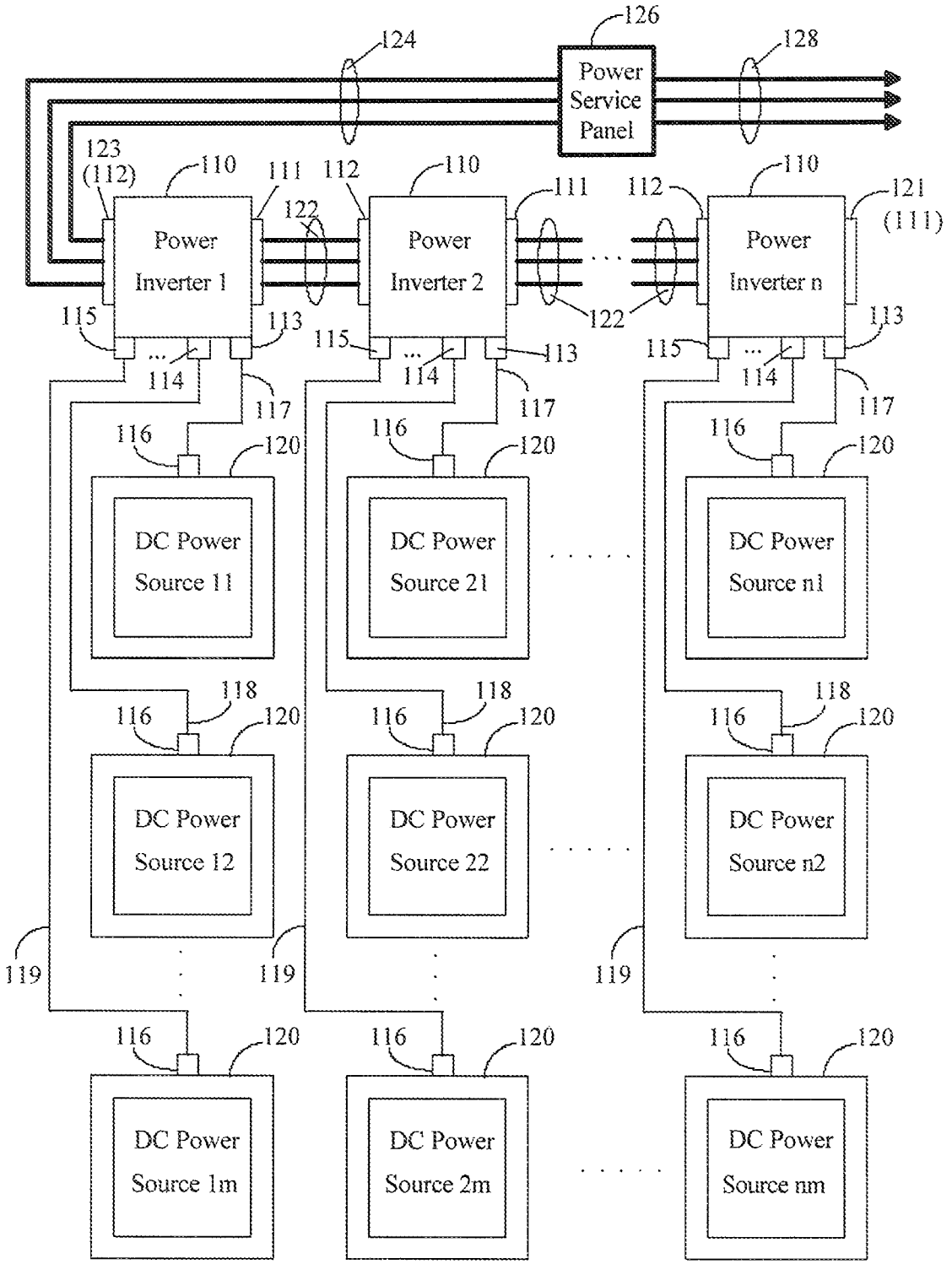
126
124
128
Power Service Panel
123 (112)
110
111
112
122
Power Inverter 1
Power Inverter 2
Power Inverter n
121 (111)
115
113
114
117
116
120
DC Power Source 11
DC Power Source 21
DC Power Source n1
118
DC Power Source 12
DC Power Source 22
DC Power Source n2
119
DC Power Source 1m
DC Power Source 2m
DC Power Source nm

Fig. 6

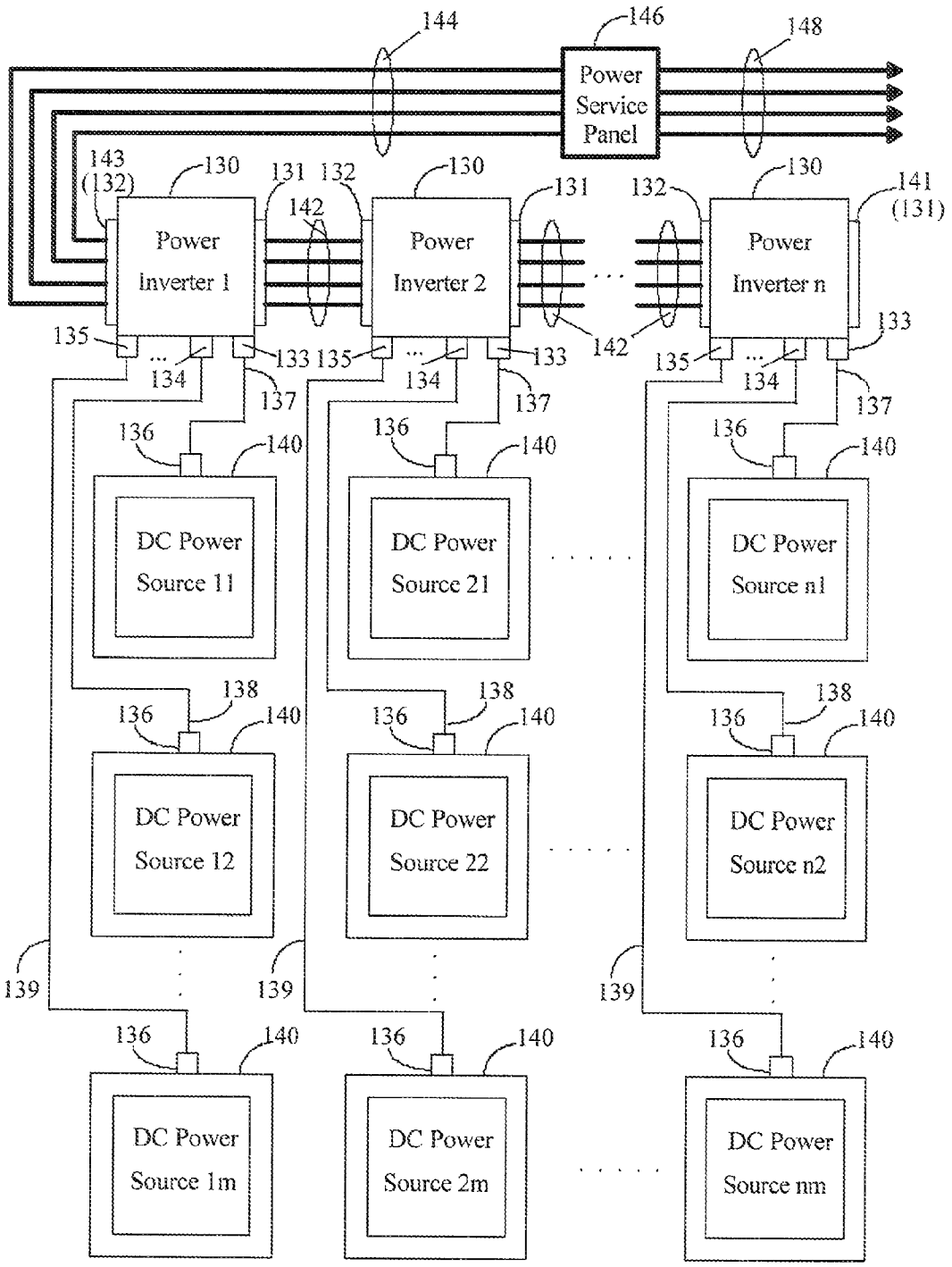
144
146
148
Power Service Panel
143 (132)
130
131
132
142
Power Inverter 1
Power Inverter 2
Power Inverter n
141 (131)
133
134
135
137
136
140
138
139
DC Power Source 11
DC Power Source 21
DC Power Source n1
DC Power Source 12
DC Power Source 22
DC Power Source n2
DC Power Source 1m
DC Power Source 2m
DC Power Source nm

Fig. 7

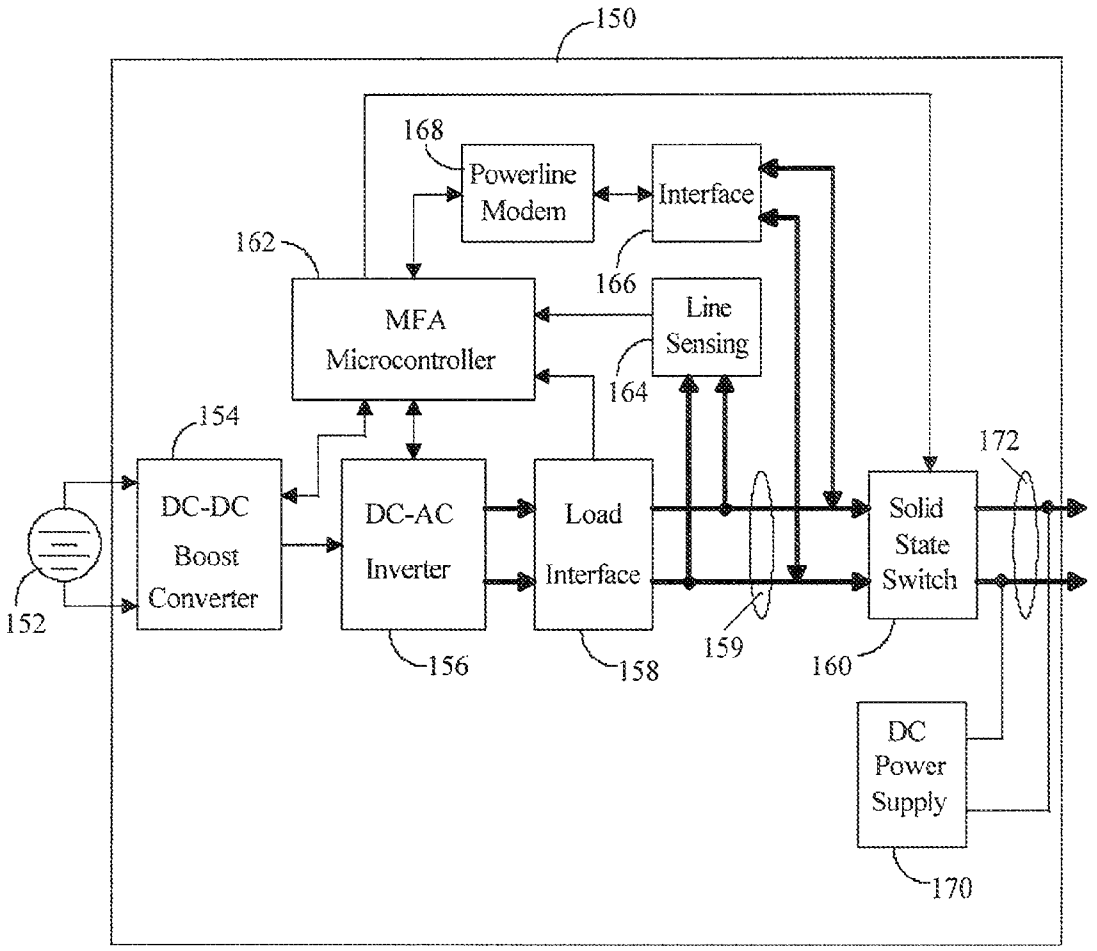
150
168
Powerline Modem
Interface
162
166
MFA Microcontroller
Line Sensing
164
154
172
DC-DC Boost Converter
DC-AC Inverter
Load Interface
Solid State Switch
152
156
158
159
160
DC Power Supply
170

Fig. 8

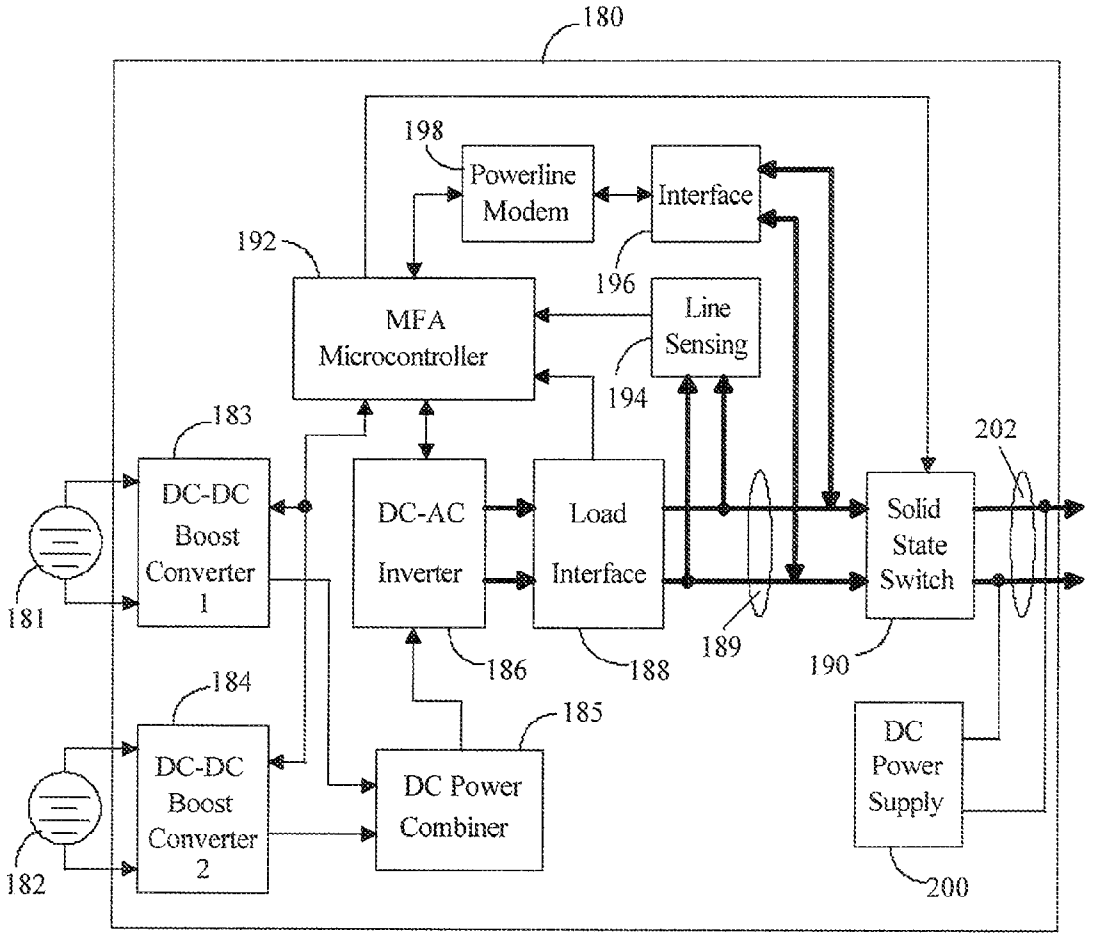
180
198
Powerline Modem
Interface
192
196
MFA Microcontroller
Line Sensing
194
183
202
DC-DC Boost Converter 1
DC-AC Inverter
Load Interface
Solid State Switch
181
186
188
189
190
184
185
DC-DC Boost Converter 2
DC Power Combiner
DC Power Supply
182
200

Fig. 9

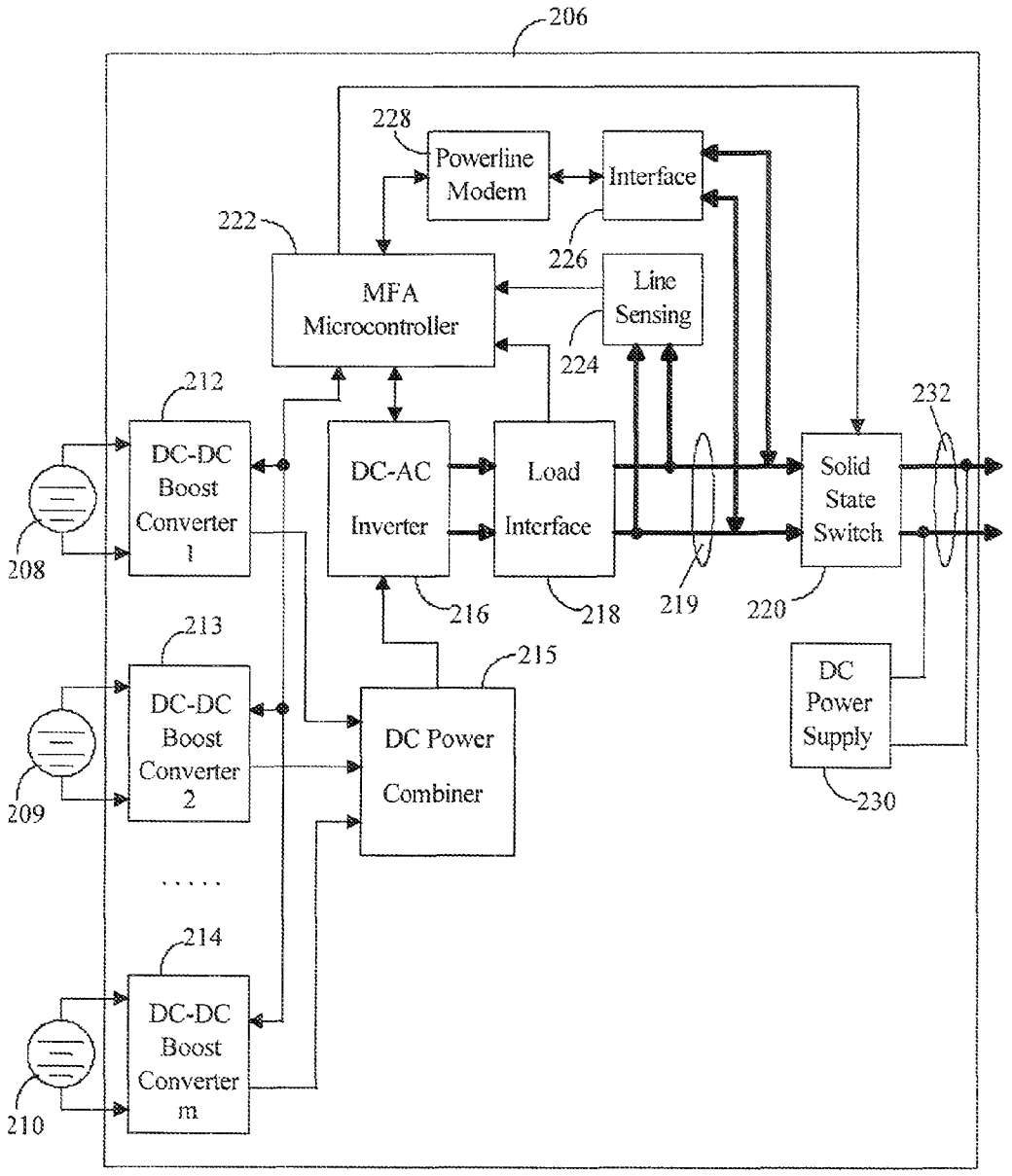
206
228
Powerline Modem
Interface
222
226
MFA Microcontroller
Line Sensing
224
212
232
DC-DC Boost Converter 1
DC-AC Inverter
Load Interface
Solid State Switch
208
216
218
219
220
213
215
DC-DC Boost Converter 2
DC Power Combiner
DC Power Supply
209
230
214
DC-DC Boost Converter m
210

Fig. 10

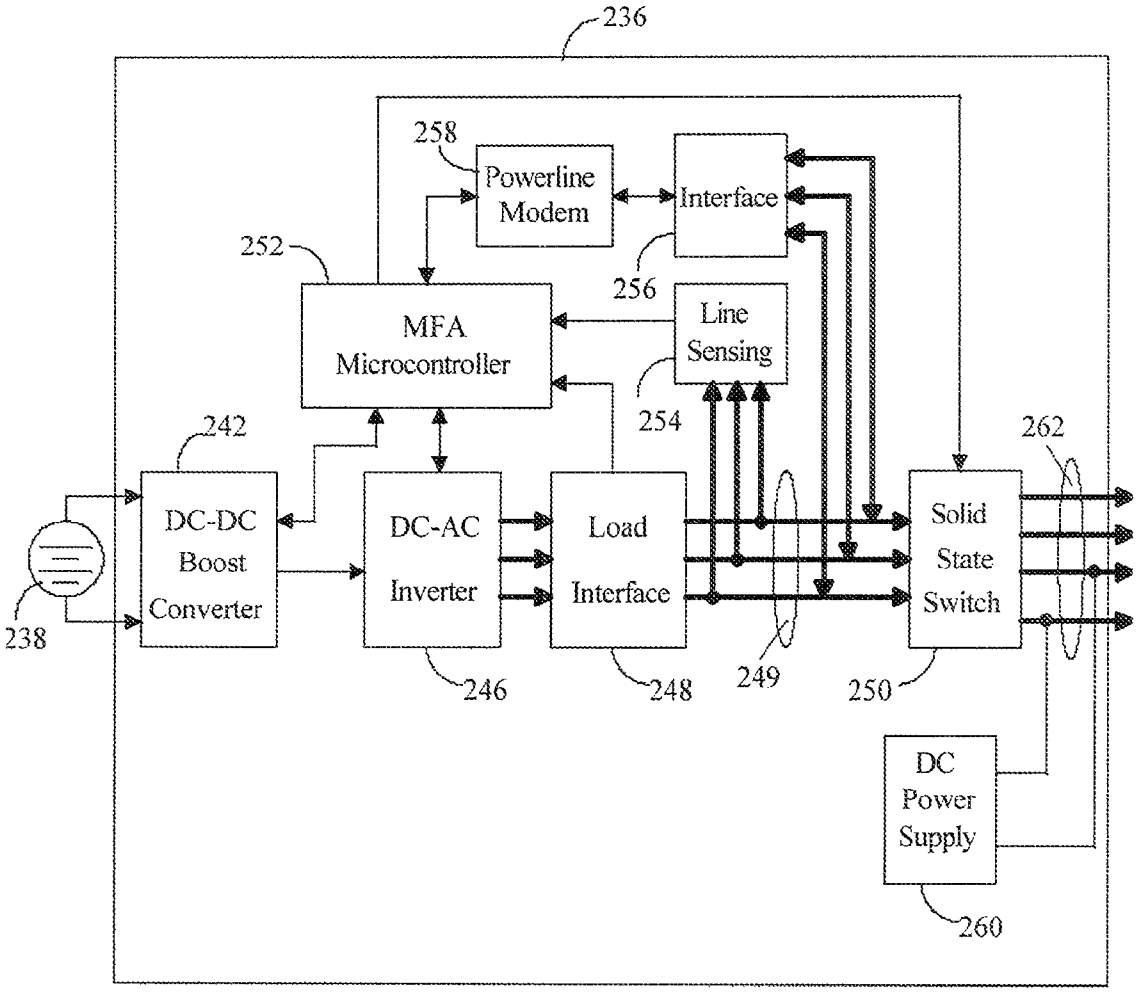
236
258
Powerline Modem
Interface
252
256
MFA Microcontroller
Line Sensing
254
242
262
DC-DC Boost Converter
DC-AC Inverter
Load Interface
Solid State Switch
238
246
248
249
250
DC Power Supply
260

Fig. 11

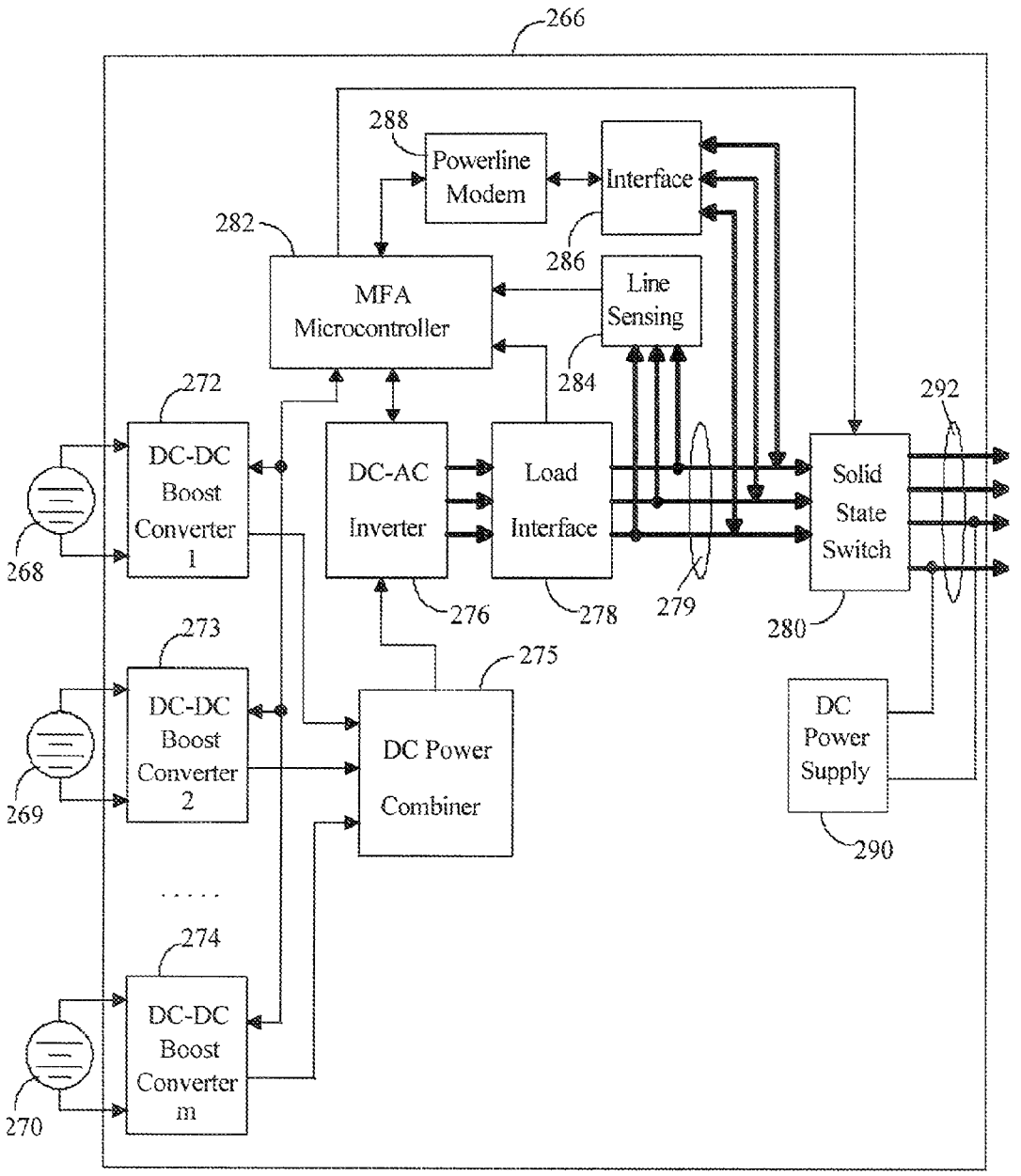
266
288
Powerline Modem
Interface
282
286
MFA Microcontroller
Line Sensing
284
272
292
DC-DC Boost Converter 1
DC-AC Inverter
Load Interface
Solid State Switch
268
276
278
279
280
273
275
DC-DC Boost Converter 2
DC Power Combiner
DC Power Supply
269
290
. . . . .
274
DC-DC Boost Converter m
270

Fig. 12

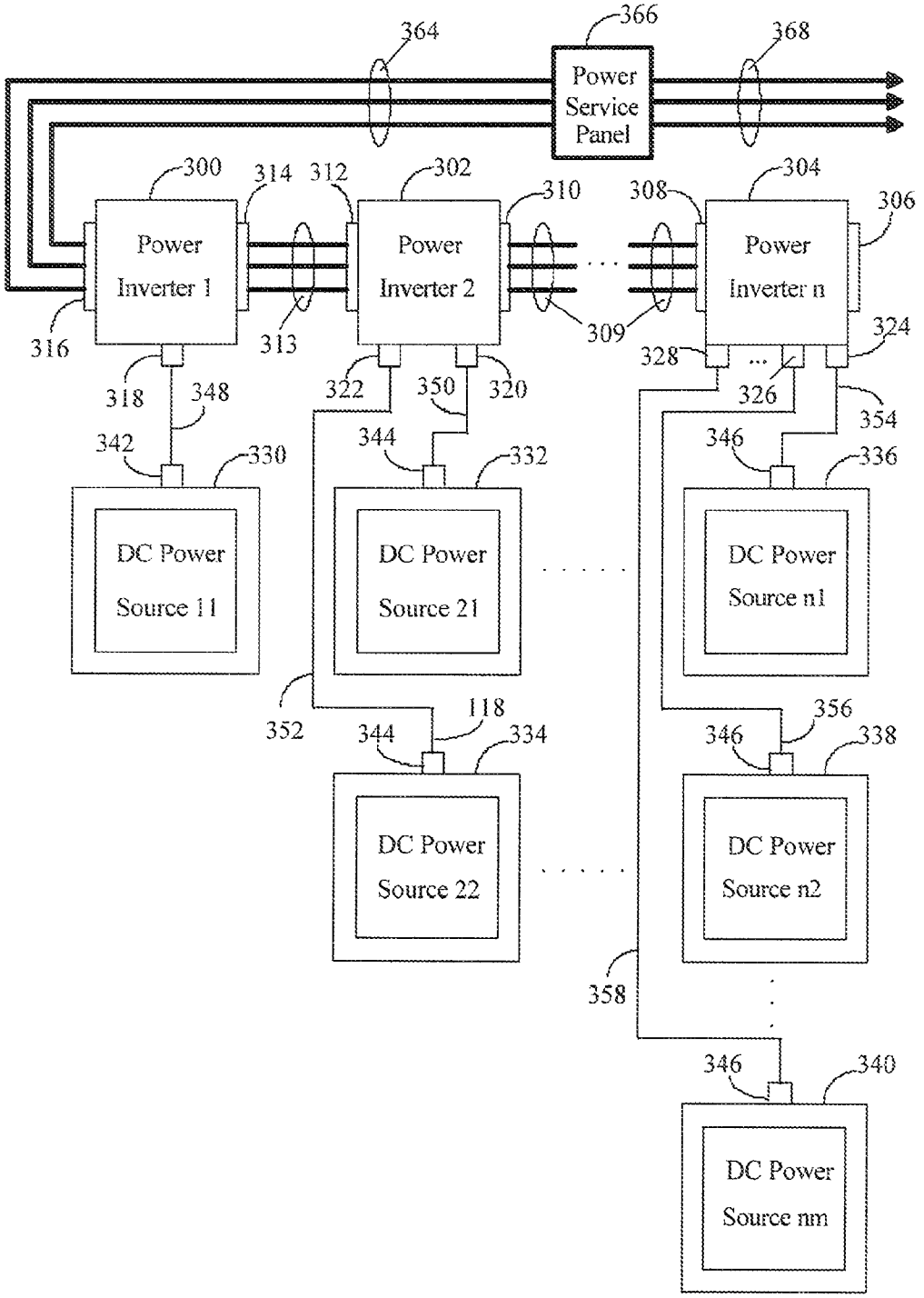
364
366
368
Power Service Panel
300
314
312
302
310
308
304
306
Power Inverter 1
Power Inverter 2
Power Inverter n
316
313
309
324
328
318
348
322
350
320
326
354
342
330
344
332
346
336
DC Power Source 11
DC Power Source 21
DC Power Source n1
352
118
344
334
356
346
338
DC Power Source 22
DC Power Source n2
358
346
340
DC Power Source nm

Fig. 13

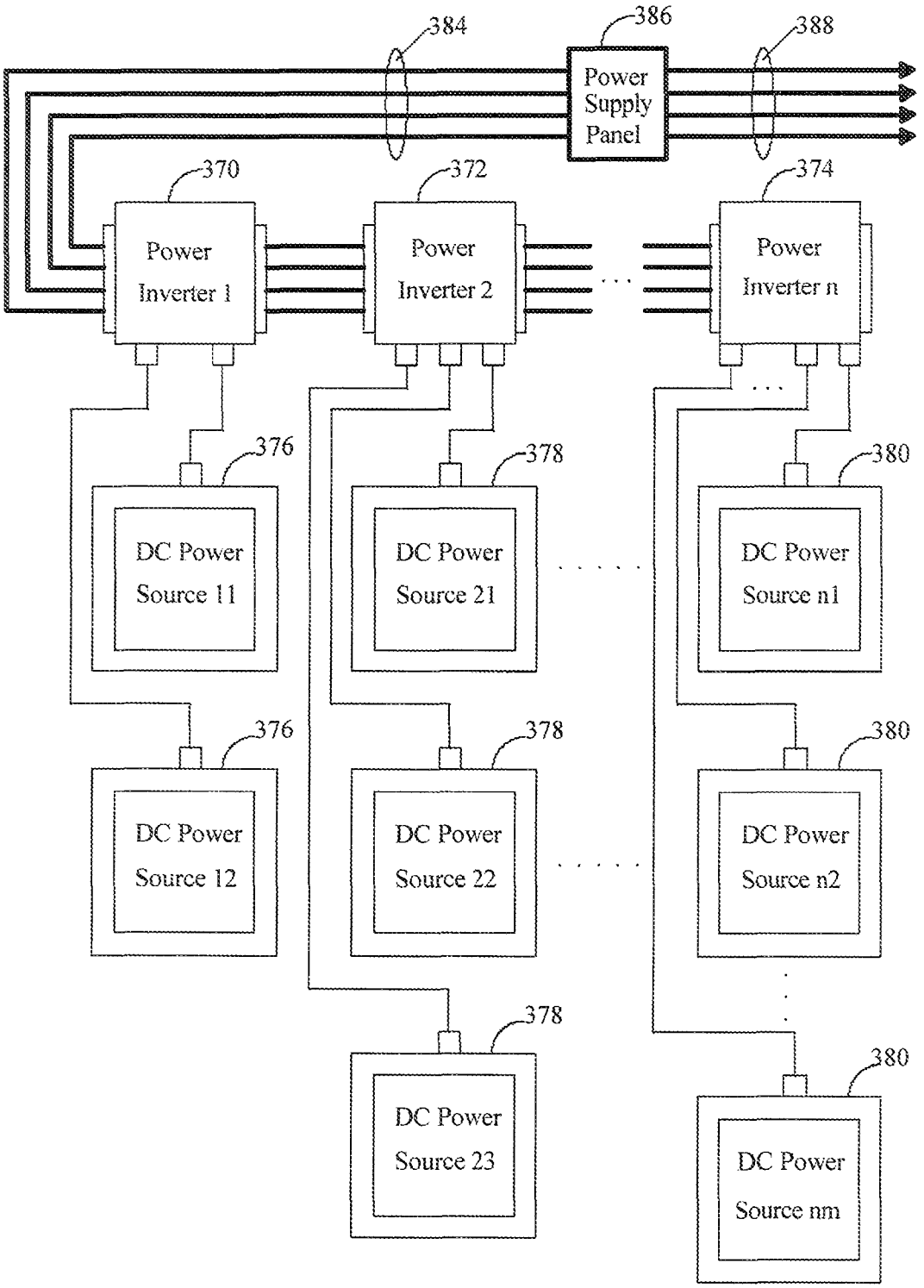
384
386
388
Power Supply Panel
370
372
374
Power Inverter 1
Power Inverter 2
Power Inverter n
376
378
380
DC Power Source 11
DC Power Source 21
DC Power Source n1
DC Power Source 12
DC Power Source 22
DC Power Source n2
DC Power Source 23
DC Power Source nm

Fig. 14

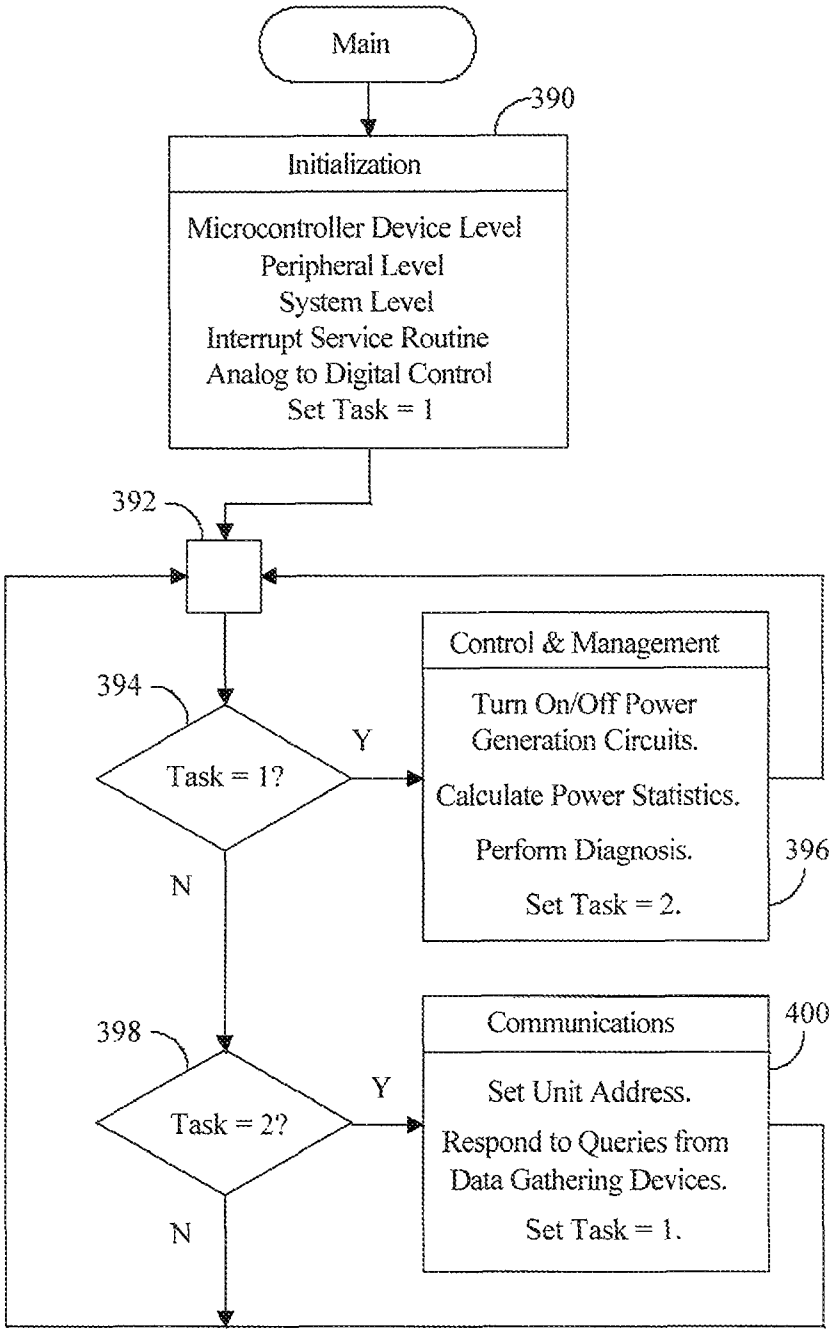
Main
390
Initialization
Microcontroller Device Level
Peripheral Level
System Level
Interrupt Service Routine
Analog to Digital Control
Set Task = 1
392
394
Task = 1?
Y
N
Control & Management
Turn On/Off Power Generation Circuits.
Calculate Power Statistics.
Perform Diagnosis.
Set Task = 2.
396
398
Task = 2?
Y
N
Communications
400
Set Unit Address.
Respond to Queries from Data Gathering Devices.
Set Task = 1.

Fig. 15

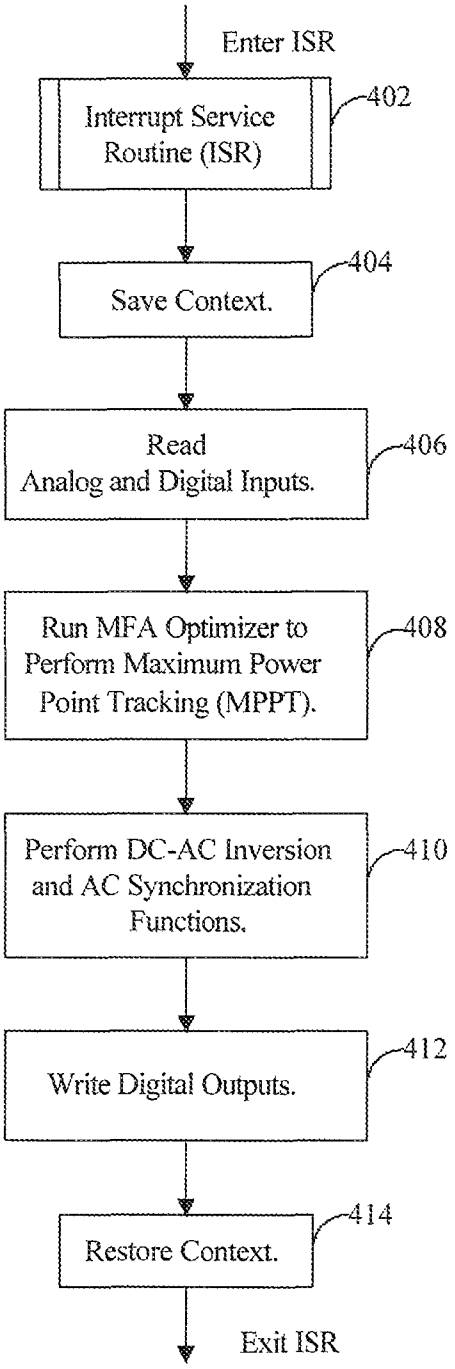
Enter ISR
Interrupt Service Routine (ISR)
402
Save Context.
404
Read Analog and Digital Inputs.
406
Run MFA Optimizer to Perform Maximum Power Point Tracking (MPPT).
408
Perform DC-AC Inversion and AC Synchronization Functions.
410
Write Digital Outputs.
412
Restore Context.
414
Exit ISR

Fig. 16

SMART AND SCALABLE POWER INVERTERS

This application claims priority to U.S. Provisional Application No. 61/226,141, filed on Jul. 16, 2009, which is herein incorporated by reference.

The subject of this patent relates to direct current (DC) to alternating current (AC) power inverters that invert DC power from single or multiple DC power sources to single-phase or three-phase AC power, where the DC power source includes but is not limited to photovoltaic (PV) solar modules, fuel cells, batteries, and other DC power generators. More particularly, this patent relates to a method and apparatus that can intelligently invert DC power from single or multiple DC sources to single-phase or three-phase AC power to feed the power grid with both optimal efficiency and system scalability. The inventive smart and scalable power inverters include a novel and unique scalable design so that the DC to AC power inversion system can include as few as one inverter and one DC source, up to a selected number of inverters and multiple DC sources. A number of smart single-input, dual-input, triple-input, quad-input, and multiple-input power inverters in a mixed variety can easily connect to single, dual, triple, quad, and multiple DC power sources, invert the DC power to AC power, and daisy chain together to generate, a total power, which is equal to the summation of the AC power supplied by each smart and scalable power inverter.

In the following, we will use a photovoltaic (PV) solar power system as an example to describe this invention. Traditionally, in a PV solar power system, the DC output from each solar module is combined in a DC junction box. The final DC output from the DC junction box is connected to a large centralized DC-AC power inverter to generate electricity. Using a centralized power inverter includes the following shortcomings:

1. If the inverter fails, the entire solar power generation system shuts down;
2. The centralized power inverter requires a large space to install, generates excessive heat and noise, and can be costly;
3. Since the performance of the entire solar power system is dictated by the performance of the weakest solar module, power production is negatively affected by non-uniformity of solar modules, sunlight variations or partial shading due to clouds, trees, dust on the panel, etc.;
4. The Maximum Power Point Tracking (MPPT) can only be applied to a system level, not to each solar module;
5. A lot of design and installation effort must be made to assure the solar modules are properly oriented in respect to each other;
6. The DC power output from each solar module has to be wired to a DC power junction box causing the wiring to be costly and labor intensive; and
7. Expensive large gauge DC power cables have to be used to connect the junction box and the centralized power inverter to avoid excessive power loss.

The smart and scalable power inverters described in this patent overcome these shortcomings and provide great scalability and flexibility to easily and cost-effectively install a photovoltaic solar power system with optimal power generation efficiency.

In the accompanying drawings:

FIG. **1** is a block diagram illustrating a smart single-input power inversion and optimization system where one power inverter inverts the DC power from one DC source to single-phase AC power.

FIG. **2** is a block diagram illustrating a smart single-input three-phase power inversion and optimization system where one power inverter inverts the DC power from one DC source to three-phase AC power.

FIG. **3** is a block diagram illustrating a smart single-input power inversion and optimization system where two or more smart power inverters daisy chain, each of which inverts the DC power from one DC source to single-phase AC power.

FIG. **4** is a block diagram illustrating a smart single-input three-phase power inversion and optimization system where two or more smart power inverters daisy chain, each of which inverts the DC power from one DC source to three-phase AC power.

FIG. **5** is a block diagram illustrating a smart dual-input power inversion and optimization system where two or more smart power inverters daisy chain, each of which inverts the DC power from two DC sources to single-phase AC power.

FIG. **6** is a block diagram illustrating a smart multi-input power inversion and optimization system where two or more smart power inverters daisy chain, each of which inverts the DC power from multiple DC sources to single-phase AC power.

FIG. **7** is a block diagram illustrating a smart multi-input three-phase power inversion and optimization system where two or more smart power inverters daisy chain, each of which inverts the DC power from multiple DC sources to three-phase AC power.

FIG. **8** is a block diagram illustrating a smart single-input power inverter that inverts the DC power from one DC source to single-phase AC power.

FIG. **9** is a block diagram illustrating a smart dual-input power inverter that inverts the DC power from two DC sources to single-phase AC power.

FIG. **10** is a block diagram illustrating a smart multi-input power inverter that inverts the DC power from multiple DC sources to single-phase AC power.

FIG. **11** is a block diagram illustrating a smart single-input three-phase power inverter that inverts the DC power from one DC source to three-phase AC power.

FIG. **12** is a block diagram illustrating a smart multi-input three-phase power inverter that inverts the DC power from multiple DC sources to three-phase AC power.

FIG. **13** is a block diagram illustrating a smart power inversion and optimization system where one smart single-input power inverter, one smart dual-input power inverter, and a number of multi-input power inverters in a mixed variety daisy chain to generate single-phase AC power.

FIG. **14** is a block diagram illustrating a smart three-phase power inversion and optimization system where one smart dual-input power inverter, one smart triple-input power inverter, and a number of smart multi-input power inverters in a mixed variety daisy chain to generate three-phase AC power.

FIG. **15** is a flow chart describing the main software program running in the MFA microcontroller.

FIG. **16** is a flow chart describing the key components, functions, and steps in the interrupt service routine embedded in the MFA microcontroller.

The term "mechanism" is used herein to represent hardware, software, or any combination thereof.

DESCRIPTION

FIG. **1** is a block diagram illustrating a smart single-input power inversion and optimization system where one power inverter inverts the DC power from one DC source to single-phase AC power. The system comprises one power inverter

10, one DC power source such as a solar module **20**, an inverter's AC power output port **12**, an inverter's DC power port **14**, a DC source's DC power connector **16**, a DC power cable **18**, a single-phase AC powerline **24**, a power service panel **26**, and the power grid **28**. This is the simplest case of the DC to AC power inversion and optimization system, where one DC to AC power inverter connects to a DC source on one end, inverts the DC power to single-phase AC power, and outputs the AC power to the power grid **28** via the AC powerline **24** and the power service panel **26**. If the DC source is a photovoltaic (PV) solar module, this can be considered a personal solar power system that could be potentially installed by a knowledgeable homeowner, provided certain permits are obtained.

FIG. **2** is a block diagram illustrating a smart single-input three-phase power inversion and optimization system where one power inverter inverts the DC power from one DC source to three-phase AC power. The system comprises one power inverter **30**, one DC power source such as a solar module **40**, an inverter's AC power output port **32**, an inverter's DC power port **34**, a DC power connector of the DC source **36**, a DC power cable **38**, a three-phase AC powerline **44**, a three-phase power service panel **46**, and the three-phase power grid **48**. The DC to AC power inverter connects to a DC source on one end, inverts the DC power to three-phase AC power, and outputs the AC power to the power grid **48** via AC powerline **44** and power service panel **46**.

FIG. **3** is a block diagram illustrating a smart single-input power inversion and optimization system where two or more power inverters daisy chain, each of which inverts the DC power from one DC source to single-phase AC power. The system comprises n smart power inverters **50** and the same number of DC power sources **60**. Each smart power inverter comprises an AC power input port **51**, an AC power output port **52**, and a DC power port **54**. Each DC power source such as a solar module **60** comprises a DC power connector **56** and is connected to its corresponding power inverter via a DC power cable **58**, respectively. All the smart power inverters **50** daisy chain, where the first power inverter's AC input port **53** is left open, and the last power inverter's AC output port **55** is connected to a power service panel **66** via the single-phase AC powerline **64**. The AC power generated by the system is supplied to the power grid **68**.

Throughout this document, n=1, 2, 3, . . . , as an integer. Based on the design of the smart and scalable power inverter, there could be a limit to the actual number of inverters that can daisy chain. This is because the total generated AC current cannot exceed the limit of the connected branch circuit breaker in the power service panel. For each power service panel, multiple branch circuits can be added based on the desired power generation requirements of the application.

Without losing generality, let us say n=16 as an example. That means, 16 smart power inverters, can daisy chain, where the AC output port of a smart power inverter connects to the AC input port of the next smart power inverter, and so on. The first power inverter's AC input port is left open, and the last power inverter's AC output port is connected to an AC power service panel so that the generated AC power can be sent to the power grid. This method greatly simplifies the wiring job when installing a PV solar power system.

Although we say the power inverters daisy chain, where the output port of each power inverter is connected to the input port of the next power inverter, the actual connection of the inverters is pass-through. That means, the generated AC power from each power inverter is added in parallel onto the AC powerline. In this scheme, a defective or low-producing power inverter will not interfere with other power inverters that are able to generate usable AC power. A defective or low-producing power inverter will be switched off automatically by a solid-state switch mechanism in the inverter. Therefore, unless the AC powerline is broken, all the healthy power inverters on the AC powerline will continue to work.

FIG. **4** is a block diagram illustrating a smart single-input three-phase power inversion and optimization system where two or more power inverters daisy chain, each of which inverts the DC power from one DC source to three-phase AC power. The system comprises n smart power inverters **70** and the same number of DC power sources **80**. Each smart power inverter comprises an AC power input port **71**, an AC power output port **72**, and a DC power port **74**. Each DC source such as a solar module **80** comprises a DC power connector **76** and is connected to its corresponding power inverter via a DC power cable **78**, respectively. All the smart power inverters **70** daisy chain, where the first power inverter's AC input port **73** is left open, and the last power inverter's AC output port **75** is connected to a three-phase power service panel **86** via the three-phase AC powerline **84**. The AC power generated by the system is supplied to the three-phase power grid **88**.

FIG. **5** is a block diagram illustrating a smart dual-input power inversion and optimization system where two or more smart power inverters daisy chain, each of which inverts the DC power from two DC sources to single-phase AC power. The system comprises n smart dual-input power inverters **90** and two times more of the DC power sources **100**, so the total number of DC power sources is 2×n (2 times n). Each DC power source such as a solar module **100** comprises a DC power connector **96**. Each smart dual-input power inverter has two DC power ports **94** and **95** connecting to their corresponding DC sources via DC power cables **98** and **99**, respectively. Each smart power inverter comprises an AC power input port **91** and an AC power output port **92**. All the smart power inverters **90** daisy chain, where the first power inverter's AC input port **101** is left open, and the last power inverter's AC output port **103** is connected to a power service panel **106** via the single-phase AC powerline **104**. The AC power generated by the system is supplied to the power grid **108**.

FIG. **6** is a block diagram illustrating a smart multi-input power inversion and optimization system where two or more power inverters daisy chain, each of which inverts the DC power from multiple DC sources to single-phase AC power. Without losing generality, the system comprises n smart multi-input power inverters **110**, each of which has multiple DC power input ports **113**, **114**, . . . , **115**. Each DC source **120** has a DC power connector **116**. For each smart multi-input power inverter, m DC sources **120** are connected to their corresponding power inverter via DC power cables **117**, **118**, . . . , **119**, respectively. Each smart power inverter comprises an AC power input port **111** and an AC power output port **112**. All the smart power inverters **110** daisy chain, where the first power inverter's AC input port **121** is left open, and the last power inverter's AC output port **123** is connected to a power service panel **126** via the single-phase AC powerline **124**. The AC power generated by the system is supplied to the power grid **128**. With this scalable scheme, there are n×m (n times m) DC power sources such as PV solar modules **120** in the system, where n is the total number of power inverters, and m is the total number of DC sources connected to each power inverter.

Throughout this document, m=1, 2, 3, . . . as an integer. The smart and scalable power inverter can be designed with single-input (m=1), dual-input (m=2), triple-input (m=3), quad-input (m=4), and so on. Practically, various smart power inverter products can be designed with a different number of inputs. They have to be practically useful, meet branch circuit

limit requirements, and make economic sense depending on the applications. Since each smart multi-input power inverter can handle m DC power sources, it is much more cost effective than the one-on-one design where a power inverter is required for each DC source. In addition, n smart multi-input power inverters can daisy chain through their AC power ports so that the wiring job can be significantly reduced during the installation of the solar power system.

For multi-input power inverters, the actual number of inverters that can daisy chain is limited by the total power generated by all the DC sources connected in a sub-system for a specific branch circuit. In this configuration, there are a total n×m (n times m) DC sources. If a branch circuit can take the total power generated by 16 DC sources as an example, we can daisy chain 8 dual-input power inverters or 4 quad-input power inverters to meet this requirement. More branch circuits can always be added to a power service panel if there are a large number of DC sources in the system. In this case, the solar power system will include a number of sub-systems, each of which includes n×m DC sources, n smart and scalable power inverters, and one branch circuit.

FIG. **7** is a block diagram illustrating a smart multi-input three-phase power inversion and optimization system where two or more smart power inverters daisy chain, each of which inverts the DC power from multiple DC sources to three-phase AC power. Without losing generality, the system comprises n smart multi-input power inverters **130**, each of which has m DC power input ports **133**, **134**, . . . , **135**. Each DC power source **140** has a DC power connector **136**. For each smart multi-input power inverter, m DC sources **140** are connected to their corresponding power inverter via DC power cables **137**, **138**, . . . , **139**, respectively. Each smart power inverter comprises an AC power input port **131** and an AC power output port **132**. The n smart power inverters **130** daisy chain, where the first power inverter's AC input port **141** is left open, and the last power inverter's AC output port **143** is connected to a power service panel **146** via the three-phase AC powerline **144**. The AC power generated by the system is supplied to the three-phase power grid **148**.

FIG. **8** is a block diagram illustrating a smart single-input power inverter that inverts the DC power from one DC source to single-phase AC power. The smart single-input power inverter **150** comprises a DC-DC boost converter **154**, a DC-AC inverter **156**, a load interface circuit **158**, a solid-state switch circuit **160**, an MFA microcontroller **162**, a line sensing circuit **164**, an interface circuit for powerline communications **166**, a powerline communications Modem **168**, and a DC power supply **170**.

The MFA microcontroller **162** as well as the ones to be described in FIGS. **9**, **10**, **11**, and **12** are small computers on a single integrated circuit (IC) or a set of ICs that consists of a central processing unit (CPU) combined with functions and peripherals including a crystal oscillator, timers, watchdog, serial and analog I/Os, memory modules, pulse-width-modulation (PWM) generators, and user software programs. A 32-bit high-performance floating-point microcontroller is selected for this application. The MFA microcontroller performs real-time control and optimization functions for the smart and scalable power inverter, in which Model-Free Adaptive (MFA) controllers are used to control the DC-DC boost converter, and MFA optimizers provide maximum power point tracking (MPPT) to allow the power inverter to achieve optimal power production. The MFA control and optimization technologies have been described in U.S. Pat. Nos. 6,055,524, 6,556,980, 6,360,131, 6,684,115, 6,684,112, 7,016,743, 7,142,626, 7,152,052, 7,415,446, related international patents, and other pending patents.

In FIG. **8**, the power from a DC source **152** is delivered to a DC-DC boost converter **154**. As an example, a standard 24V PV solar module will produce a usable DC power in the range of 24V to 40V DC up to 8 A. In order to produce commercial 240V AC power, the incoming DC voltage needs to be boosted to a minimal usable value such as 170V DC. Inductors, capacitors, diodes, switches, and controlled PWM (pulse width modulation) signals are used to perform the DC voltage boost. The DC power is then inverted to AC power with voltage larger than 240V AC by the DC-AC inverter **156**. The generated AC power goes through the load interface circuit **158** to be combined with the AC power in the internal AC powerline **159**. The high frequency components of the generated AC power are being filtered by the load interface circuit **158**. A solid-state switch **160** controlled by the MFA microcontroller **162** is used to isolate the internal AC powerline **159** from the external AC powerline **172** when solar power is not being generated. This way, consumption of AC power from the power grid by the solar power unit will be minimized during the non-generation time. A line sensing circuit **164** connected to the AC powerline **159** is used to detect the phase and zero-crossing point of the incoming AC power from the power grid. The phase and zero-crossing point signals are sent to the MFA microcontroller **162** for AC power synchronization to assure that the power inverter provides high quality synchronized power to the grid. A powerline communications Modem **168**, which is isolated by an interface circuit **166**, is used to establish a 2-way digital signal communication between the MFA microcontroller **162** and the outside world through the AC powerline. This way, no extra digital signal lines are needed since the digital signals are embedded inside the AC power signal. The external AC powerline **172** is tapped by a power supply **170** to supply DC power to the electronic components of the power inverter.

The MFA microcontroller **162** is used to perform a number of tasks including (i) monitoring the DC boost voltage, (ii) controlling the DC-DC boost converter, (iii) performing maximum power point tracking (MPPT), (iv) performing DC-AC inversion and AC power synchronization, (v) monitoring AC current and voltage for generated power amount and status, (vi) performing powerline communications, (vii) performing logic controls such as AC powerline switching and isolation.

FIG. **9** is a block diagram illustrating a smart dual-input power inverter that inverts the DC power from two DC sources to single-phase AC power. The smart dual-input power inverter **180** comprises 2 DC-DC boost converters **183**, **184**, a DC power combiner **185**, a DC-AC inverter **186**, a load interface circuit **188**, a solid-state switch circuit **190**, an MFA microcontroller **192**, a line sensing circuit **194**, an interface circuit for powerline communications **196**, a powerline communications Modem **198**, and a DC power supply **200**. The power from DC sources **181**, **182** is delivered to the corresponding DC-DC boost converters **183**, **184**, respectively. The DC power is then combined in the DC power combiner **185**. The total combined DC power is inverted to AC power with voltage larger than 240V AC by the DC-AC inverter **186**. The generated AC power goes through the load interface circuit **188** to be combined with the AC power in the internal AC powerline **189**. A solid-state switch **190** controlled by the MFA microcontroller **192** is used to isolate the internal AC powerline **189** from the external AC powerline **202** when solar power is not being generated. A line sensing circuit **194** connected to the AC powerline **189** is used to detect the phase and zero-crossing point of the incoming AC power from the power grid. The phase and zero-crossing point signals are sent to the MFA microcontroller **192** for AC power synchroniza-

tion to assure that the power inverter provides high quality synchronized power to the grid. A powerline communications Modem **198**, which is isolated by an interface circuit **196**, is used to establish a 2-way digital signal communication between the MFA microcontroller **192** and the outside world through the AC powerline. The external AC powerline **202** is tapped by a power supply **200** to supply DC power to the electronic components of the power inverter. The MFA microcontroller **192** is used to perform a number of tasks including (i) monitoring the DC boost voltage from each DC-DC boost converter, (ii) controlling the DC-DC boost converters, (iii) performing maximum power point tracking (MPPT) for each DC source, (iv) performing DC-AC inversion and AC power synchronization, (v) monitoring AC current and voltage for generated power amount and status, (vi) performing powerline communications, (vii) performing logic controls such as AC powerline switching and isolation.

FIG. **10** is a block diagram illustrating a smart multi-input power inverter that inverts the DC power from multiple DC sources to single-phase AC power. The smart multi-input power inverter **206** comprises m DC-DC boost converters **212**, **213**, . . . , **214**, a DC power combiner **215**, a DC-AC inverter **216**, a load interface circuit **218**, a solid-state switch circuit **220**, an MFA microcontroller **222**, a line sensing circuit **224**, an interface circuit for powerline communications **226**, a powerline communications Modem **228**, and a DC power supply **230**. The power from DC sources **208**, **209**, . . . , **210** is delivered to the corresponding DC-DC boost converters **212**, **213**, . . . , **214**, respectively. The DC power is then combined in the DC power combiner **215**. The total combined DC power is inverted to AC power with voltage larger than 240V AC by the DC-AC inverter **216**. The generated AC power goes through the load interface circuit **218** to be combined with the AC power in the internal AC powerline **219**. A solid-state switch **220** controlled by the MFA microcontroller **222** is used to isolate the internal AC powerline **219** from the external AC powerline **232** when solar power is not being generated. A line sensing circuit **224** connected to the AC powerline **219** is used to detect the phase and zero-crossing point of the incoming AC power from the power grid. The phase and zero-crossing point signals are sent to the MFA microcontroller **222** for AC power synchronization to assure that the power inverter provides high quality synchronized power to the grid. A powerline communications Modem **228**, which is isolated by an interface circuit **226**, is used to establish a 2-way digital signal communication between the MFA microcontroller **222** and the outside world through the AC powerline. The external AC powerline **232** is tapped by a power supply **230** to supply DC power to the electronic components of the power inverter. The MFA microcontroller **222** is used to perform a number of tasks including (i) monitoring the DC boost voltage from each DC-DC boost converter, (ii) controlling the DC-DC boost converters, (iii) performing maximum power point tracking (MPPT) for each DC source, (iv) performing DC-AC inversion and AC power synchronization, (v) monitoring AC current and voltage for generated power amount and status, (vi) performing powerline communications, (vii) performing logic controls such as AC powerline switching and isolation.

FIG. **11** is a block diagram illustrating a smart single-input three-phase power inverter that inverts the DC power from one DC source to three-phase AC power. The smart three-phase single-input power inverter **236** comprises a DC-DC boost converter **242**, a DC-AC inverter **246**, a load interface circuit **248**, a solid-state switch circuit **250**, an MFA microcontroller **252**, a line sensing circuit **254**, an interface circuit for powerline communications **256**, a powerline communications Modem **258**, and a DC power supply **260**. The power from the DC source **238** is delivered to the DC-DC boost converter **242** and its voltage is increased to a certain value. The DC power is then inverted to three-phase AC power with voltage larger than 208V AC by the DC-AC inverter **246**. The generated AC power goes through the load interface circuit **248** to be combined with the AC power in the internal three-phase AC powerline **249**. A solid-state switch **250** controlled by the MFA microcontroller **252** is used to isolate the internal three-phase AC powerline **249** from external three-phase AC powerline **262** when solar power is not being generated. A line sensing circuit **254** connected to the AC powerline **249** is used to detect the phase and zero-crossing point of the incoming three-phase AC power from the power grid. The phase and zero-crossing point signals are sent to the MFA microcontroller **252** for AC power synchronization to assure that the power inverter provides high quality synchronized three-phase AC power to the grid. A powerline communications Modem **258**, which is isolated by an interface circuit **256**, is used to establish a 2-way digital signal communication between the MFA microcontroller **252** and the outside world through the AC powerline. The external three-phase AC powerline **262** is tapped by a power supply **260** to supply DC power to the electronic components of the power inverter. The MFA microcontroller **252** is used to perform a number of tasks including (i) monitoring the DC boost voltage from the DC-DC boost converter, (ii) controlling the DC-DC boost converter, (iii) performing maximum power point tracking (MPPT) for the DC source, (iv) performing DC-AC inversion and three-phase AC power synchronization, (v) monitoring the three-phase current and voltage for generated power amount and status, (vi) performing powerline communications, (vii) performing logic controls such as three-phase AC powerline switching and isolation.

FIG. **12** is a block diagram illustrating a smart multi-input three-phase power inverter that inverts the DC power from multiple DC sources to three-phase AC power. The smart multi-input three-phase power inverter **266** comprises m DC-DC boost converters **272**, **273**, . . . , **274**, a DC power combiner **275**, a DC-AC inverter **276**, a load interface circuit **278**, a solid-state switch circuit **280**, an MFA microcontroller **282**, a line sensing circuit **284**, an interface circuit for powerline communications **286**, a powerline communications Modem **288**, and a DC power supply **290**. The power from DC sources **268**, **269**, . . . , **270** is delivered to the corresponding DC-DC boost converters **272**, **273**, . . . , **274**, respectively. The DC power is then combined in the DC power combiner **275**. The total combined DC power is inverted to three-phase AC power with voltage larger than 208V AC by the DC-AC inverter **276**. The generated AC power goes through the load interface circuit **278** to be combined with the AC power in the internal three-phase AC powerline **279**. A solid-state switch **280** controlled by the MFA microcontroller **282** is used to isolate the internal three-phase AC powerline **279** from the external three-phase AC powerline **292** when solar power is not being generated. A line sensing circuit **284** connected to the AC powerline **279** is used to detect the phase and zero-crossing point of the incoming three-phase AC power from the power grid. The phase and zero-crossing point signals are sent to the MFA microcontroller **282** for AC power synchronization to assure that the power inverter provides high quality synchronized power to the grid. A powerline communications Modem **288**, which is isolated by an interface circuit **286**, is used to establish a 2-way digital signal communication between the MFA microcontroller **282** and the outside world through the AC powerline. The external three-phase AC powerline **292** is tapped by a power supply **290** to supply DC

power to the electronic components of the power inverter. The MFA microcontroller **282** is used to perform a number of tasks including (i) monitoring the DC boost voltage from each DC-DC boost converter, (ii) controlling the DC-DC boost converters, (iii) performing maximum power point tracking (MPPT) for each DC source, (iv) performing DC-AC inversion and three-phase AC power synchronization, (v) monitoring the three-phase current and voltage for generated power amount and status, (vi) performing powerline communications, (vii) performing logic controls such as three-phase AC powerline switching and isolation.

The DC-DC boost converters that can be used in this embodiment are any of a number of well known converters described in the "Power Electronics Handbook" edited by Muhammad H. Rashid, published by Academic Press in 2007, including Buck Converter, Boost Converter, Buck-Boost Converter, Super-Lift Luo Converter, and Cascade Boost Converter. The DC-AC inverters that can be used in this embodiment are any of a number of well known DC-AC inverters described in the same book including Half-Bridge Inverter, Full-Bridge Inverter, Bipolar PWM Inverter, Unipolar PWM Inverter, and Sinusoidal PWM Inverter. The DC combiners used in this embodiment can be designed with a circuit that allow the output from all DC-DC boost converters to connect in parallel so that all DC currents will be added together. The Powerline Modem that can be used in this embodiment can be any of a number of commercially available integrated circuits capable of providing 2-way digital communications through a powerline. Other modules discussed in this embodiment including load interface, solid state switch, line sensing circuit, powerline interface circuit, and DC power supply can be implemented using one or more known combinations of conventional electronic components such as resisters, capacitors, inductors, solid-state switches, transformers, diodes, transistors, operational amplifiers, and ceramic filters, etc.

FIG. **13** is a block diagram illustrating a smart power inversion and optimization system, where one smart single-input power inverter, one smart dual-input power inverter, and a number of multi-input power inverters in a mixed variety daisy chain to generate single-phase AC power. The system comprises a smart single-input power inverter **300**, a smart dual-input power inverter **302**, and n−2 smart multi-input power inverters **304**. The single-input power inverter **300** inverts DC from one DC source **330** to AC power; the dual-input power inverter **302** inverts DC from two DC sources **332** and **334** to AC power; and the multi-input power inverter **304** inverts DC from multiple DC sources **336**, **338**, and **340** to AC power. The single-input power inverter **300** connects to DC source **330** through its DC power port **318**, DC source's DC connector **342**, and a DC cable **348**. The dual-input power inverter **302** connects to DC sources **332** and **334** through its DC power ports **320** and **322**, DC sources' DC connectors **344**, and DC cables **350** and **352**, respectively. The multi-input power inverter **304** connects to DC sources **336**, **338**, and **340** through its DC power ports **324**, **326**, and **328**, DC sources' DC connector **346**, and DC cables **354**, **356**, and **358**, respectively.

The smart single-input power inverter comprises an AC input port **314** and an AC output port **316**; the smart dual-input power inverter comprises an AC input port **310** and an AC output port **312**; and the smart multi-input power inverter comprises an AC input port **306** and an AC output port **308**. Without losing generality, within the system, there could be a number of smart power inverters having a mixed variety of inputs. All the smart and scalable power inverters daisy chain, where the first power inverter's AC input port **306** is left open, and the last power inverter's AC output port **316** is connected to a power service panel **366** via the single-phase AC powerline **364**. The AC power generated by the system is supplied to the power grid **368**.

FIG. **14** is a block diagram illustrating a smart power inversion and optimization system where one smart dual-input power inverter, one smart triple-input power inverter, and a number of smart multi-input power inverters in a mixed variety daisy chain to generate three-phase AC power. The system comprises a smart dual-input power inverter **370**, a smart triple-input power inverter **372**, and n−2 smart multi-input power inverters. **374**. The dual-input power inverter **370** inverts DC from two DC sources **376** to AC power; the triple-input power inverter **372** inverts DC from three DC sources **378** to AC power; and the multi-input power inverter **374** inverts DC from multiple DC sources **380** to AC power. Without losing generality, within the system, there could be a number of smart power inverters having a mixed variety of inputs. All the smart and scalable power inverters daisy chain, where the first power inverter's AC input port is left open, and the last power inverter's AC output port is connected to a power service panel **386** via the three-phase AC powerline **384**. The AC power generated by the system is supplied to the power grid **388**.

FIG. **15** is a flow chart describing the main software program running in the MFA microcontroller. At Block **390**, initialization is taking place in the microcontroller device level, peripheral level, system level, and for the interrupt service routine and analog and digital control routines. More specifically, initialization will include but is not limited to setting up registers, I/Os, and timers and enabling interrupts for the interrupt service routine. At the end, it will set Task=1.

In the main program, there are two major tasks. Task 1 is related to the control and management of the smart and scalable power inverter. Task 2 is related to the communications of the power inverter to the outside world through the powerline Modem. After initialization, the main program enters the main loop entry point **392** and then goes to Block **394**.

At Block **394**, the program checks to see if Task 1 is scheduled to run. If the answer is Yes, the program will execute the functions in Block **396** to (i) turn on/off the power generation circuit based on the DC power source input and conditions of the power inverter and AC powerline, (ii) calculate power statistics such as the amount of power generated during a certain period of time, and (iii) perform system diagnosis. Then, it sets Task=2 and returns to Block **392**, which is the entry of the main loop. When the program continues, it will go through Block **394**, and reach Block **398**. At Block **398**, the program checks to see if Task 2 is scheduled to run. If the answer is Yes, the program will execute the functions in Block **400** to (i) set the unit address for the power inverter, and (ii) respond to queries from data gathering or acquisition devices to report the power statistics. Then, it sets Task=1 and returns to Block **392**. The main program runs continuously based on a preset loop rate to execute the scheduled tasks. At any time an interrupt is triggered, the microcontroller immediately processes the pending interrupt service routine.

FIG. **16** is a flow chart describing the key components, functions, and steps in the interrupt service routine embedded in the MFA microcontroller. Block **402** is the entry of the interrupt service routine (ISR). An interrupt service routine is a software routine that the microcontroller invokes in response to an interrupt. All the time-critical functions the microcontroller needs to execute are put inside the TSR to assure these functions are executed in real time. At block **404**, the ISR saves the current context of the main program. At

Block **406**, the ISR reads analog and digital inputs including but not limited to the voltage and current signals from the DC source, DC-DC boost converter, DC-AC inversion circuit, and phase and zero-crossing point of the AC Powerline. At Block **408**, the ISR runs the MFA Optimizer to perform Maximum Power Point Tracking (MPPT) for each DC power source. At Block **410**, the ISR performs DC-AC inversion and AC synchronization functions. At Block **412**, the PWM control signals are sent out through the digital output ports to the corresponding DC-DC boost converter(s) and DC-AC inverter. At Block **414**, the ISR restores the saved context of the main program so that the execution of the main program can be resumed. After the ISR exits, the main program continues from the point where it was branched out to execute the interrupt service routine.

The systems described in all the figures of this patent, especially in FIGS. **1**, **2**, **13** and **14**, demonstrate the essence of the scalability of this invention. One can build a small-scale or a very large-scale PV solar power system with various numbers and sizes of the smart and scalable power inverters of this invention. Regardless of the number and types of DC sources that each power inverter can handle, the smart power inverters in the same family can daisy chain producing a total AC power that is the summation of the AC power supplied by each smart power inverter. This "anything goes" design significantly improves the scalability, flexibility, user-friendliness, and return-on-investment (ROI) of renewable energy power generation systems including photovoltaic solar power systems. In addition, an existing system can be easily expanded by installing more solar modules and smart power inverters. This makes the solar power systems attractive to both homeowners and businesses where only limited budgets are available and continued investments can be made to expand the system over time. The disclosed invention could have strategic importance to the renewable energy industry and society.

The invention claimed is:

1. A system for providing AC power to a power grid from a plurality of individual DC power sources each having a DC power output port, comprising:

a) a plurality of power inverters, each of said power inverters having one DC power input port, an AC power input port, and an AC power output port, said DC power input port having one DC power source connected thereto;

b) said AC power output port of each inverter being connected in a daisy chain to the AC power input port of the next inverter, except for the AC power input port of the first inverter being left open, and the AC power output port of the last inverter being connected to a power service panel of the power grid;

c) each of said power inverters including:

i) a DC-DC boost converter connected to said DC power source and arranged to convert the power source voltage to a higher DC voltage suitable for inversion;

ii) a DC-AC inverter connected to said DC-DC boost converter and arranged to invert the DC power to AC power with voltage higher than the incoming AC power voltage;

iii) an internal AC powerline that combines the generated AC power with the external AC power from the power grid;

iv) a load interface circuit connected to said DC-AC inverter and to said internal AC powerline, said load interface circuit being arranged to filter high-frequency components out of the said DC-AC inverter's AC output;

v) an MFA microcontroller connected to said DC-DC boost converter, DC-AC inverter, and load interface circuit, said microcontroller arranged to monitor the DC boost voltage, control the DC-DC boost converter, perform maximum power point tracking (MPPT), perform DC-AC inversion and AC power synchronization, monitor AC current and voltage for generated power amount and status, perform powerline communications, and perform logic controls such as AC powerline switching and isolation;

vi) a powerline modem connected to said microcontroller and said internal AC powerline through an interface circuitry for transmitting and receiving performance data between said microcontroller and said power grid;

vii) a line sensing circuit connected to said internal AC powerline and said microcontroller for detecting the phase and zero-crossing point of the incoming AC power from the power grid; and

viii) a solid state switch connected to said internal AC powerline and external AC powerline, and arranged to disconnect said internal AC powerline from the AC grid during the non-generation time.

2. The system of claim **1**, in which the output of each of said power inverters is single-phase AC.

3. The system of claim **1**, in which the output of each of said power inverters is three-phase AC.

4. The system of claim **1**, in which said MFA microcontroller includes Model-Free Adaptive (MFA) controllers which control the DC-DC boost converter, and MFA optimizers which provide maximum power point tracking (MPPT) to allow the power inverter to achieve optimal power production.

5. A system for providing AC power to a power grid from a plurality of individual DC power sources each having a DC power output port, comprising:

a) a plurality of power inverters, each of said power inverters having two DC power input ports, an AC power input port, and an AC power output port, each of said DC power input ports having one DC power source connected thereto;

b) aid AC power output port of each inverter being connected in a daisy chain to the AC power input port of the next inverter, except for the AC power input port of the first inverter being left open, and the AC power output port of the last inverter being connected to a power service panel of the power grid;

c) each of said power inverters including:

i) a pair of DC-DC boost converters, one connected to each of said DC power sources, respectively, and arranged to convert the power source voltage to a higher DC voltage suitable for inversion;

ii) a DC power combiner connected to said DC-DC boost converters for combining the DC output from both DC-DC boost converters and allowing said DC-DC boost converters to connect in parallel so that all DC currents are added together;

iii) a DC-AC inverter connected to said DC power combiner and arranged to invert the DC power to AC power with voltage higher than the incoming AC power voltage;

iv) an internal AC powerline that combines the generated AC power with the external AC power from the power grid;

v) a load interface circuit connected to said DC-AC inverter and to said internal AC powerline, said load

interface circuit being arranged to filter high-frequency components out of the said DC-AC inverter's AC output;

vi) an MFA microcontroller connected to said DC-DC boost converters, DC-AC inverter, and load interface circuit, said microcontroller arranged to monitor the DC boost voltage, control the DC-DC boost converter, perform maximum power point tracking (MPPT), perform DC-AC inversion and AC power synchronization, monitor AC current and voltage for generated power amount and status, perform powerline communications, and perform logic controls such as AC powerline switching and isolation;

vii) a powerline modem connected to said microcontroller and said internal AC powerline through an interface circuitry for transmitting and receiving performance data between said microcontroller and said power grid;

viii) a line sensing circuit connected to said internal AC powerline and said microcontroller for detecting the phase and zero-crossing point of the incoming AC power from the power grid; and

ix) a solid state switch connected to said internal AC powerline and external AC powerline, and arranged to disconnect said internal AC powerline from the AC grid during the non-generation time.

6. The system of claim **5**, in which the output of each of said power inverters is single-phase AC.

7. The system of claim **5**, in which the output of each of said power inverters is three-phase AC.

8. The system of claim **5**, in which said MFA microcontroller includes Model-Free Adaptive (MFA) controllers which control the DC-DC boost converters, and MFA optimizers which provide maximum power point tracking (MPPT) to allow the power inverter to achieve optimal power production.

9. A system for providing AC power to a power grid from a plurality of individual DC power sources each having a DC power output port, comprising:

a) a plurality of power inverters, each of said power inverters having m DC power input ports, where m is an integer greater than or equal to one, an AC power input port, and an AC power output port, each of said DC power input ports having one DC power source connected thereto;

b) said AC power output port of each inverter being connected in a daisy chain to the AC power input port of the next inverter, except for the AC power input port of the first inverter being left open, and the AC power output port of the last inverter being connected to a power service panel of the power grid;

c) each of said power inverters including:

i) m number of DC-DC boost converters, one connected to each of said DC power sources, respectively, and arranged to convert the power source voltage to a higher DC voltage suitable for inversion;

ii) a DC power combiner connected to said m number of DC-DC boost converters for combining the DC output from all DC-DC boost converters and allowing said DC-DC boost converters to connect in parallel so that all DC currents are added together;

iii) a DC-AC inverter connected to said DC power combiner and arranged to invert the DC power to AC power with voltage higher than the incoming AC power voltage;

iv) an internal AC powerline that combines the generated AC power with the external AC power from the power grid;

v) a load interface circuit connected to said DC-AC inverter and to said internal AC powerline, said load interface circuit being arranged to filter high-frequency components out of the said DC-AC inverter's AC output;

vi) an MFA microcontroller connected to said DC-DC boost converters, DC-AC inverter, and load interface circuit, said microcontroller arranged to monitor the DC boost voltage, control the DC-DC boost converter, perform maximum power point tracking (MPPT), perform DC-AC inversion and AC power synchronization, monitor AC current and voltage for generated power amount and status, perform powerline communications, and perform logic controls such as AC powerline switching and isolation;

vii) a powerline modem connected to said microcontroller and said internal AC powerline through an interface circuitry for transmitting and receiving performance data between said microcontroller and said power grid;

viii) a line sensing circuit connected to said internal AC powerline and said microcontroller for detecting the phase and zero-crossing point of the incoming AC power from the power grid; and

ix) a solid state switch connected to said internal AC powerline and external AC powerline, and arranged to disconnect said internal AC powerline from the AC grid during the non-generation time.

10. The system of claim **9**, in which the output of each of said power inverters is single-phase AC.

11. The system of claim **9**, in which the output of each of said power inverters is three-phase AC.

12. The system of claim **9**, in which said MFA microcontroller includes Model-Free Adaptive (MFA) controllers which control the DC-DC boost converters, and MFA optimizers which provide maximum power point tracking (MPPT) to allow the power inverter to achieve optimal power production.

13. The system of claim **9**, in which the said MFA microcontroller is programmed with a main program to iteratively:

a) turn on and off the inverter's generation circuit based on the DC power source input and conditions of the inverter and AC powerline,

b) calculate the inverter's power statistics such as the amount of power generated during a certain period of time;

c) perform diagnostics for the inverter's status and operation;

d) set the inverter's unit address;

e) perform powerline communications; and

f) respond to queries from data gathering or acquisition devices to report the power statistics.

14. The system of claim **13**, in which said MFA microcontroller is further programmed with an interrupt service routine (ISR) to:

a) respond to an interrupt;

b) save the current context of the main program;

c) read voltage and current signals from the DC source, DC-DC boost converter, and DC-AC inverter;

d) read phase and zero-crossing point data of the AC powerline;

e) perform maximum power point tracking (MPPT) for each DC power source connected to the inverter;

f) perform DC-AC inversion and AC synchronization;

g) send out PWM control signals through the digital output ports; and

h) restore the saved context of the main program so that the execution of the main program can be resumed.

15. A scalable DC to AC power inversion system for providing AC power to a power grid from a plurality of individual DC power sources each having a DC power output port, comprising:

a) a plurality of power inverters, each of said power inverters including a single DC-AC inverter, at least two DC power input ports coupled to the single DC-AC inverter, an AC power input port, and an AC power output port coupled to the single DC-AC inverter, each of said DC power input ports having one DC power source connected thereto;

b) said AC power output port of each power inverter being connected in a daisy chain to the AC power input port of the next power inverter, except for the AC power input port of the first power inverter being left open, and the AC power output port of the last power inverter being connected to a power service panel of the power grid;

c) whereby said system is incrementally scalable by adding or subtracting DC power sources and daisy-chained inverters.

16. The system of claim **15**, in which the output of each of said power inverters is single-phase AC.

17. The system of claim **15**, in which the output of each of said power inverters is three-phase AC.

18. The system of claim **15** further comprising a first DC power source connected to one of said DC power input ports of one of said power inverters and a second DC power source, different in kind from said first DC power source, connected to another of said DC power input ports of said one power inverter.

19. A method of making a DC to AC power conversion system incrementally scalable, comprising:

a) providing a plurality of DC power sources and a plurality of DC to AC power inverters, said DC to AC power inverters each having a single DC-AC inverter, an AC input port coupled to the single DC-AC inverter, an AC output port coupled to the single DC-AC inverter, and at least two DC input ports coupled to the single DC-AC inverter;

b) connecting at least one of said DC power sources, respectively, to each of said DC input ports; and

c) providing AC power to the power grid.

20. The method of claim **19**, in which the output of each of said power inverters is single-phase AC.

21. The method of claim **19**, in which the output of each of said power inverters is three-phase AC.

22. The method of claim **19** further comprising daisy-chaining at least two of said DC to AC power inverters, said AC power output port of each DC to AC power inverter being connected in a daisy chain to the AC power input port of the next DC to AC power inverter, except for the AC power input port of the first DC to AC power inverter being left open, and the AC power output port of the last DC to AC power inverter being connected to a power service panel of the power grid.

23. The method of claim **19** where the providing of AC power includes producing a total AC power that is the summation of the AC power supplied by each said DC to AC power inverter.

24. The method of claim **19** further comprising:

a) connecting a first DC power source to one of said DC power input ports of one of said power inverters; and

b) connecting a second DC power source, different in kind from said first DC power source, to another of said DC power input ports of said one power inverter.

* * * * *