IN THE UNITED STATES PATENT AND TRADEMARK OFFICE

BEFORE THE PATENT TRIAL AND APPEAL BOARD

ALTENERGY POWER SYSTEM USA INC.
Petitioner

v.

CYBOENERGY, INC.
Patent Owner

Case IPR2024-00362

U.S. Patent No. 8,786,133

PETITION

FOR

INTER PARTES REVIEW

OF

U.S. PATENT NO. 8,736,133

TABLE OF CONTENTS

Page

EXHIBIT LIST III

I. INTRODUCTION 1

II. MANDATORY NOTICES, STANDING, AND FEES 1

A. Real Party-In-Interest (37 C.F.R. § 42.8(b)(1)). 1

B. Related Matters (37 C.F.R. § 42.8(b)(2)). 1

C. Lead and Back-Up Counsel and Service Information (37 C.F.R. § 42.8(b)(3)–(4)). 2

D. Standing. 2

E. Payment of Fees. 3

F. Proof of Service. 3

III. RELIEF REQUESTED 3

IV. THE PURPORTED INVENTION OF THE CHALLENGED CLAIMS 4

V. CLAIM CONSTRUCTION AND THE LEVEL OF SKILL IN THE ART 9

VI. PROSECUTION HISTORY 10

VII. SCOPE AND CONTENT OF THE PRIOR ART 15

VIII. CLAIMS 15–21 ARE UNPATENTABLE 22

A. Ground 1: Claims 15–16, 18–20 and 22–24 are obvious in view of *Kondo* and *Nishi*. 22

B. Ground 2: Claims 15–16, 18–20 and 22–24 are obvious in view of *Kondo* and *Fornage*. 41

C. Ground 3: Claims 15–16, 18–20 and 22–24 are obvious in view of *Fornage* and *Kondo*. 50

D. Ground 4: Claims 17 and 21 are obvious in view of any of the combinations of Grounds 1–3 and in further view of *Rotzoll '654*. 62

IX. CONCLUSION 65

CERTIFICATE OF WORD COUNT 67

TABLE OF CONTENTS
(continued)

Page

CERTIFICATE OF SERVICE 68

EXHIBIT LIST

The following Exhibit List is provided in accordance with 37 C.F.R. § 42.63(e):

Exhibit No.	Description
Ex. 1001	U.S. Patent No. 8,786,133
Ex. 1002	File History for U.S. Patent No. 8,786,133
Ex. 1003	Expert Report of Mladen Kezunovic
Ex. 1004	U.S. Patent Publication No. 2009/0020151 A1 ("Fornage")
Ex. 1005	U.S. Patent Publication No. 2008/0283118 ("Rotzoll '118")
Ex. 1006	U.S. Patent Publication No. 2005/0105224 A1 ("Nishi")
Ex. 1007	U.S. Patent Publication No. 2002/0038667 A1 ("Kondo")
Ex. 1008	A Review of Single-Phase Grid-Connected Inverters for Photovoltaic Modules, Kjaer, Pedersen and Blaabjerg, IEEE TRANSACTIONS ON INDUSTRY APPLICATIONS, VOL. 41, NO. 5, SEPTEMBER/OCTOBER 2005 ("Kjaer")
Ex. 1009	U.S. Patent Publication No. 2009/0000654 ("Rotzoll '654")

Ex. 1010	Report and Recommendation on Claim Construction
Ex. 1011	U.S. Patent No. 9,331,489

I. INTRODUCTION

Under 35 U.S.C. §§ 311–319 and 37 C.F.R. § 42.100 *et seq.*, Petitioner Altenergy Power System USA Inc. requests *inter partes* review of claims 15–24 of U.S. Patent No. 8,736,133 (Ex. 1001) ("the '133 Patent"). This Petition establishes a reasonable likelihood that at least one of claims 15–24 of the '133 Patent is unpatentable.

II. MANDATORY NOTICES, STANDING, AND FEES

A. Real Party-In-Interest (37 C.F.R. § 42.8(b)(1)).

The real party-in-interest is Petitioner, Altenergy Power System USA, Inc., which is wholly owned by Yuneng Technology Co. Ltd., which is traded on the Shanghai Stock Exchange STAR Market under 688348:CH.

B. Related Matters (37 C.F.R. § 42.8(b)(2)).

The '133 Patent is involved in three pending lawsuits, one of which involves Petitioner: *CyboEnergy Inc. v. Altenergy Power Sys. USA Inc.*, Case No. 6:22-cv-01136-KC (W.D. Tex.); *CyboEnergy, Inc. v. Hoymiles Power Elecs. USA, Inc.*, Case No. 2-23-cv-00311 (E.D. Tex.); and *CyboEnergy, Inc. v. Northern Elec. Power Tech., Inc.*, Case No. 5-23-cv-06121 (N.D. Cal.). These cases may be affected by the outcome of this Petition. In the *CyboEnergy Inc. v. Altenergy Power Sys. USA Inc.*, matter CyboEnergy has asserted infringement of claims 15–16, 19–20 and 22–23, which are challenged in this Petition.

Additionally, U.S. Patent No. 9,257,916 claims priority to the ’133 Patent, and so the outcome in this proceeding may affect that patent.

C. Lead and Back-Up Counsel and Service Information (37 C.F.R. § 42.8(b)(3)–(4)).

Petitioner provides the following designation of counsel, to which all correspondence should be addressed. Petitioner consents to electronic service.

Lead Counsel	**Backup Counsel**
Michael J. Curley (Reg. No. 63,251) QUARLES & BRADY LLP One South Church Avenue, Suite 1800 Tucson, Arizona 85741 Tel: (520) 770-8768 Fax: (520) 623-2418 michael.curley@quarles.com	Johanna M. Wilbert (Reg. No. 61,410) QUARLES & BRADY LLP 411 E. Wisconsin Avenue, Suite 2350 Milwaukee, Wisconsin 53202 Tel: (414) 277-5495 Fax: (414) 271-3552 johanna.wilbert@quarles.com

A power of attorney appointing the above lead and back-up counsel accompanies this Petition.

D. Standing.

Petitioner certifies that the ’133 Patent is available for IPR having been filed on July 15, 2010 and issued on July 22, 2014, and that Petitioner is not barred or estopped from requesting review of claims 15–24 of the ’133 Patent on the grounds identified in this Petition.

E. Payment of Fees.

The required fee has been paid from Deposit Account No. 170055, and the Office is authorized to deduct any additional fees due with this Petition.

F. Proof of Service.

Proof of service of this Petition is provided in Attachment A.

III. RELIEF REQUESTED

Petitioner requests review of claims 15–24 of the ’133 Patent on the following grounds:

Ground	Proposed Statutory Rejections for the ’133 Patent
1	Claims 15–16, 18–20 and 22–24 of the ’133 Patent are obvious in view of ***Kondo*** and ***Nishi*** under 35 U.S.C. § 103.
2	Claims 15–16, 18–20 and 22–24 of the ’133 Patent are obvious in view of ***Kondo*** and ***Fornage*** under 35 U.S.C. § 103.
3	Claims 15–16, 18–20 and 22–24 of the ’133 Patent are obvious in view of ***Fornage*** and ***Kondo*** under 35 U.S.C. § 103.
4	Claims 17 and 21 are obvious in view of any of ***Kondo*** and ***Nishi, Kondo*** and ***Fornage or Fornage*** and ***Kondo*** and in further view of ***Rotzoll ’654*** under 35 U.S.C. § 103.

Each of the references listed in the preceding table are prior art under pre-AIA 35 U.S.C. §§ 102(b) or (e) because each reference is a patent or printed publication published or filed before the ’133 Patent’s claimed priority date of July 16, 2009. The references are analogous art to the ’133 Patent because all references relate directly to inverter systems for use with DC electrical power sources such as photovoltaic modules.

IV. THE PURPORTED INVENTION OF THE CHALLENGED CLAIMS

The ’133 Patent is directed to inverters for converting DC power generated by photovoltaic (“PV”) solar modules, or other DC power sources, into AC power that can be supplied to the AC power grid. *See* Ex. 1001, Abstract, 1:7–12; Ex. 1003, ¶¶ 29–33.

A photovoltaic module or “solar module” is a device that converts light energy into electrical energy. Ex. 1003, ¶ 32. Photovoltaic modules are direct current or DC devices, where the direction of power flow and current polarity are constant over time. *Id.,* ¶¶ 31–32. Electrical utilities, however, supply AC electricity, where the direction of power flow and polarity of current change over time, because AC electricity is more efficiently transmitted over long distances. *Id.*, ¶¶ 30–31. As a result, electrical appliances used in homes and businesses are generally designed to absorb single or three phase power, e.g., the 120V single phase AC circuit power at a home’s wall socket or 208V or 400V three phase AC

circuit power in commercial and industrial applications. *Id.*, ¶ 31. For the DC electrical power generated by a photovoltaic module to be connected to the single phase or three-phase AC grid owned by the utility or to AC appliances and other devices owned by the customer, that DC power must be changed into AC power. *Id.*, ¶ 32. This is done by an "inverter" or a collection of inverters. *See id.*

The '133 Patent describes and claims an arrangement for connecting one or more inverters to one or more photovoltaic modules. *See* Ex. 1001, Abstract, FIG. 5. FIG. 5 of the '133 Patent, below, shows the allegedly inventive arrangement, which includes a plurality of inverters (90), each of which has at least two DC input ports (94, 95) coupled to DC power sources, such as photovoltaic modules (100). Each inverter has as a single DC-AC inverter (shown, for example, as element 186 in FIG. 9), and the inverter can be "connected in a daisy-chain" through AC input and output ports (91, 92), and to a power service panel (106) of the power grid. *See* Ex. 1001, 4:21–39, 15:5–25, 16:1–11.

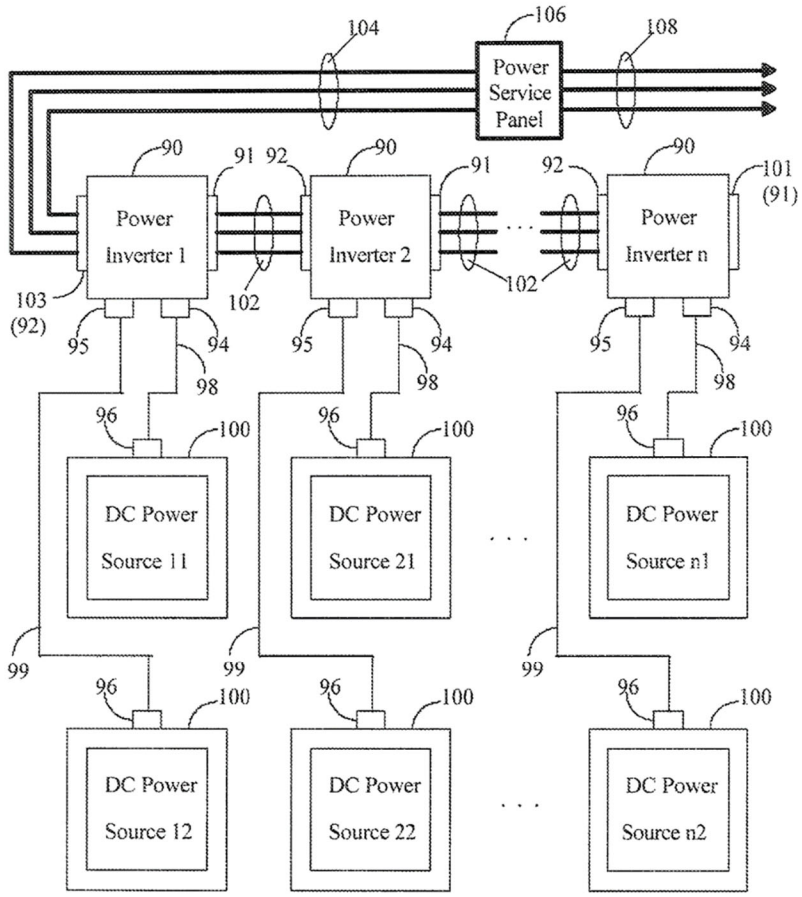

Fig. 5

Of the challenged claims, claim 15, is the sole independent apparatus claim claiming, at a high level, the interconnected elements illustrated in FIG. 5. Claim 19 is a corresponding method claim. The elements of those claims are set forth in the chart below. The order of the elements of claim 19 has been altered to show correspondence with the claim 15 elements. Certain claims depending from claim 19 also correspond to elements in claim 15.

15p1: A scalable DC to AC power inversion system for providing AC power to a power grid	**19p**: A method of making a DC to AC power conversion system incrementally scalable, comprising:
15p2: from a plurality of individual DC power sources each having a DC power output port, comprising:	**19a1:** a) providing a plurality of DC power sources
15a1: a) a plurality of power inverters, each of said power inverters including a single DC-AC inverter,	**19a2**: and a plurality of DC to AC power inverters, said DC to AC power inverters each having a single DC-AC inverter,
15a2: at least two DC power input ports coupled to the single DC-AC inverter,	**19a4:** and at least two DC input ports coupled to the single DC-AC inverter;
15a3: an AC power input port, and an AC power output port coupled to the single DC-AC inverter,	**19a3**: an AC input port coupled to the single DC-AC inverter, an AC output port coupled to the single DC-AC inverter,
15a4: each of said DC power input ports having one DC power source connected thereto;	**19b1:** b) connecting at least one of said DC power sources, respectively, to each of said DC input ports; and

15b1: b) said AC power output port of each power inverter being connected in a daisy-chain to the AC power input port of the next power inverter,	
15b2: except for the AC power input port of the first power inverter being left open,	
15b3: and the AC power output port of the last power inverter being connected to a power service panel of the power grid;	**19c**: c) providing AC power to the power grid.
15c: c) whereby said system is incrementally scalable by adding or subtracting DC power sources and daisy-chained inverters.	

V. CLAIM CONSTRUCTION AND THE LEVEL OF SKILL IN THE ART

The purported invention of the ’133 Patent is claimed at a high level and described schematically, with no reference to individual circuits or circuit diagrams. Ex. 1003, ¶ 27. Accordingly, Petitioner submits that the claims do not require formal construction and all terms should be given their plain and ordinary meaning—a position that is consistent with Magistrate Gilliland’s recommendation in the pending district court action. Ex. 1010 (R. & R. on Claim Construction) at 1; *see also* Ex. 1003, ¶ 62.

Petitioner does not waive any argument in any litigation that claim terms in the ’133 Patent are indefinite or otherwise invalid, nor does Petitioner waive its right to raise additional issues of claim construction in any litigation. Construction of claim terms may be relevant to issues in district court litigation, e.g., as part of resolving non-infringement disputes or to “clarify and when necessary to explain” terms for “determination of infringement” by the factfinder—typically non-technologist judges and/or jurors. *O2 Micro Int’l Ltd. v. Beyond Innovation Tech. Co.*, 521 F.3d 1351, 1362 (Fed. Cir. 2008) (citation omitted).

In view of the simplicity with which the purported invention of the ’133 Patent is described and claimed, the sorts of problems and solutions encountered in the art, the pace of innovation, the sophistication of the technology and the level of education of typical workers, the person having ordinary skill in the art would have

a bachelor's degree in electrical engineering and five years of experience designing grid connected photovoltaic systems. Ex. 1003, ¶¶ 27–28.

VI. PROSECUTION HISTORY

The '133 application was filed with 28 claims. Ex 1002, at 251–261. Applicant withdrew claims 13–20 in response to Restriction Requirement. *Id*. at 139. Claims 1–12, 24, and 25 were allowed in a first Office Action and became claims 1–14 in the issued '133 patent. *Id*. at 93, 25. Independent claims 21 and 26 (which issued as 15 and 19) were rejected over JP 09275637A (***"Aoki"***). Ex. 1002, at 25, 100–109. In its original form, claim 15 (21) recited as follows:

> 21. (Original) A scalable DC to AC power inversion system for providing AC power to a power grid from a plurality of individual DC power sources each having a DC power output port, comprising:
>
> a) a plurality of power inverters, each of said power inverters having at least one DC power input port, an AC power input port, and an AC power output port, each of said DC power input ports having one DC power source connected thereto;
>
> b) said AC power output port of each inverter being connected in a daisy chain to the AC power input port of the next inverter, except for the AC power input port of the first inverter being left open, and the AC power output port of the last inverter being connected to a power service panel of the power grid;
>
> c) whereby said system is incrementally scalable by adding or subtracting DC power sources and daisy-chained inverters; and
>
> d) whereby an optimal amount of AC power is generated and supplied to said power grid regardless of the performance of any individual power source.

Id. at 148. The Examiner rejected clause "d" of claim 21 as indefinite under § 112, took Official Notice that the "service panel" and "power grid" limitations were well known in the art (s*ee* Ex. 1003, ¶¶ 68–70), and found the remaining

limitations, including the claimed "daisy-chain" AC connection between multiple inverters to be disclosed by ***Aoki***. Ex. 1002, at 94–96. Referring to FIG. 1 (below) the Examiner noted that ***Aoki*** disclosed:

> a) a plurality of power inverters, each of said power inverters having at least one DC power input port (*i.e.* input to FC, fig1), an AC power input port (i.e. respective input ports 333, fig1 [*sic* – 133]), and an AC power output port (i.e. respective output ports 134, fig 1), each of said DC power input ports having one DC power source connected thereto (read on by each respective FC); b) said AC power output port of each inverter being connected in a daisy chain to the AC power input port of the next inverter (read on by both the physical connection (i.e. "input to output") and also the daisy chain master/slave configuration…) except for the AC power input port of the first inverter being left open (see open input of first/top inverter)…

Id.

【図1】

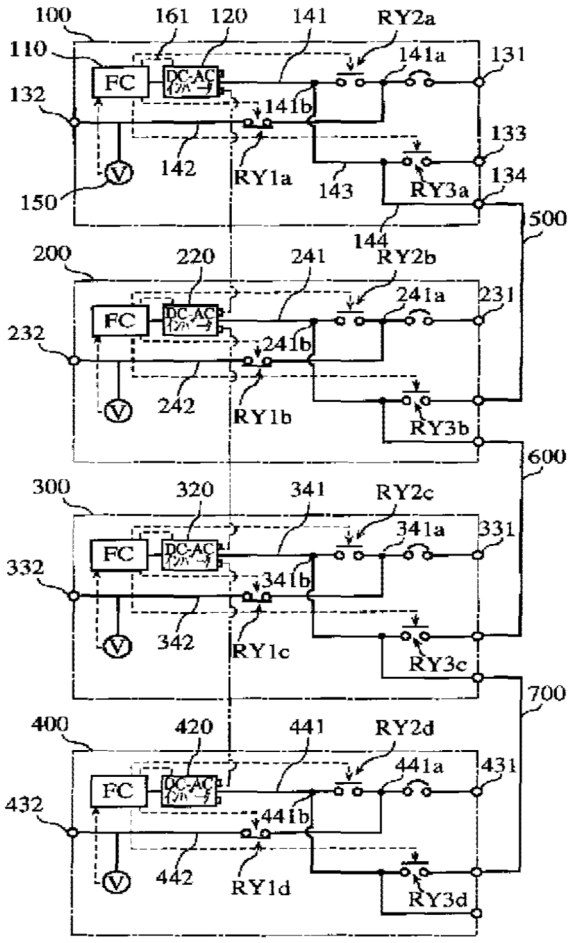

Applicant never disputed the Examiner's correct observation that ***Aoki*** disclosed a daisy-chain of inverters connected through AC input/output ports. FIG. 1 of ***Aoki***, above, shows just that, with an AC output port 134 of inverter 100, connected to an input of the next inverter in a daisy-chain, with the first input (133) being left open. *See* Ex. 1003, ¶¶ 67 and 75 (discussing ***Aoki***'s apparent AC input and output ports 133/134). Instead, Applicant amended claims 21 and 26 to require "each of said power inverters having at least two DC power input ports." Ex. 1002

at 81, 85 ("Thus the power inverters of claims 21 and 26 are capable of accepting DC power from multiple sources."). Later, Applicant further limited 21 and 26 to require that each inverter have a "single DC-AC inverter" and "at least two DC power input ports are coupled to the single DC-AC inverter," and argued "***Aoki*** fails to teach or suggest multiple DC input ports coupled to a single DC-AC inverter or the advantages thereof." *Id*. at 52, 56.

In allowing the case, the Examiner did not rely on these amendments regarding the inverter having a single DC-AC inverter with at least two DC input ports. Rather, the Examiner stated "[t]he primary reason for allowance of the claims is the inclusion of the particular port configuration further comprising both an AC input port coupled to the single DC-AC inverter and the AC output port coupled to the single DC-AC inverter." *Id.* at 19. The Examiner's conclusion here was in error. *See* Ex. 1003, ¶¶ 75–77. The Examiner had *already located* an AC input port and an AC output port coupled to an inverter in ***Aoki*** (elements 133 and 134 in ***Aoki***, FIG. 1, above). Applicant never disputed this conclusion. Moreover, ***Rotzoll '118*** (Ex. 1005), a reference cited by the Examiner (Ex. 1002 at 19), but not substantively analyzed or relied on in a rejection, discloses AC input and output ports (e.g., connectors) connected to a single inverter for arranging inverters in a daisy-chain. *See* Ex. 1003, ¶¶ 76–77. ***Rotzoll '118*** shows these features in FIG. 2 (annotated below) and provides, "[t]he AC grid voltage appears at connector the

208 and is passed to the inverter **224** of the PV module **222** via another connector **225**, which is mated with a receiving connector **208**. Similarly, the same AC voltage is now available at a similar inverter **244** via the mating of a like connector **228** to another receiving connector **245**. This sequence can continue until the maximum current rating of all cables **206**, **207**, **226**, **227**, **246**, **247** and **266** has been exhausted." Ex 1005, [0008]. ***Rotzoll '118*** explicitly refers to this manner of connection through AC inputs and outputs as a "daisy chain" - "There are, according to one embodiment, two inverter mounting bracket AC connections to support daisy-chain connections between multiple AC modules." *Id.* at [0015]; *see also* Ex. 1003, ¶ 77.

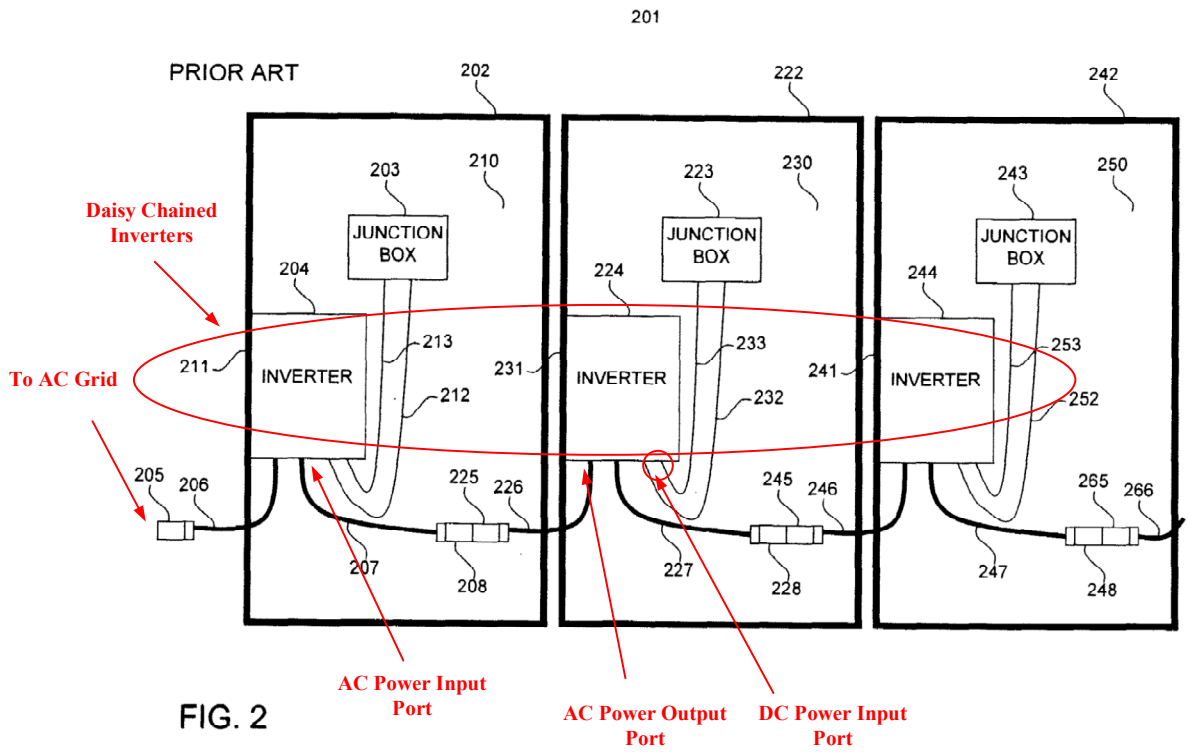

FIG. 2

Thus, the idea of daisy-chained inverters connected through AC input/output ports was in the prior art, the Examiner acknowledged as much with ***Aoki***, and the Applicant did not contest that finding. As disclosed below, Applicant's asserted point of novelty, inverters with multiple DC inputs, was also in the prior art.

VII. SCOPE AND CONTENT OF THE PRIOR ART

Claims 15 and 19 of the '133 Patent claim an obvious combination of two prior art photovoltaic module inverter arrangements: multi-input, or multi-string inverters, and inverters connected in a daisy-chain arrangement.

Before the priority date of the '133 Patent, there were multiple known ways of connecting inverters with solar modules. Ex. 1003, ¶ 40 citing ***Kjaer*** (Ex. 1008). Initially, a single central inverter was used with all solar panels in an installation. *Id.* Later, "string inverters" were introduced. *Id.* String inverters used one inverter for a string of multiple, series-connected solar panels, and sometimes, multiple strings and inverters were combined in a single solar installation. *Id.* Later, and directly relevant to the challenged claims, multi-string inverters were developed. *Id*. In a multi-string inverter, more than one solar panel or string of solar panels is connected to a single inverter, typically through one or more DC/DC converters. *Id.* Later still, "modules" were developed, where each solar panel has its own inverter. *Id.* These various topologies are schematically illustrated in FIG. 3 from ***Kjaer***, a 2005 IEEE paper, which is excerpted below.

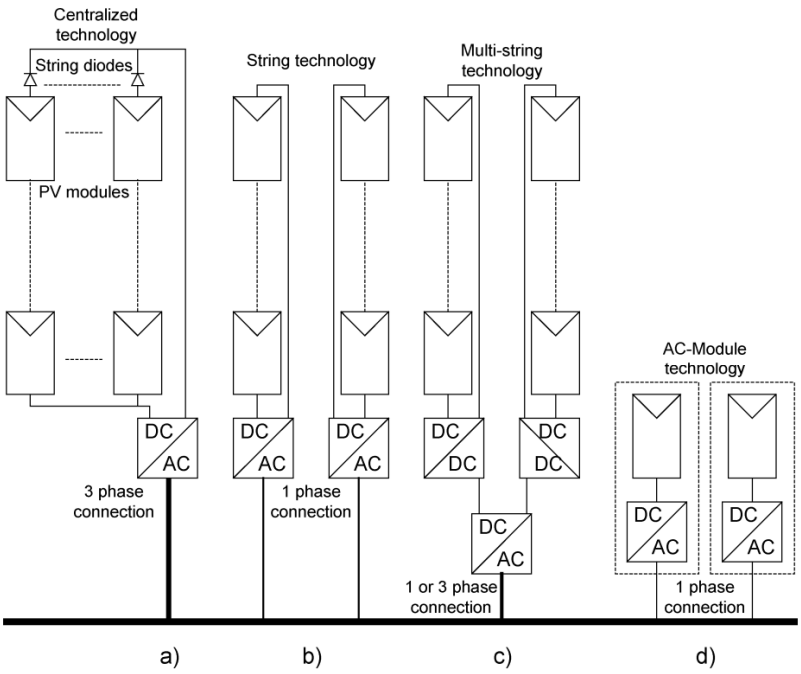

Fig. 3. Historical overview of PV inverters. (a) Past centralized technology. (b) Present string technology. (c) Present and future multi-string technology. (d) Present and future ac-module and ac cell technologies.

The multi-string inverter topology illustrated above had a significant advantage over prior inverter configurations. Solar cells, or series connected strings of solar cells, will generate different amounts of power relative to other cells or strings of cells in the same installation. Ex. 1003, ¶¶ 41, and 35–38. This is because individual panels have different responsivities, may become dirty or damaged, might be in the shade at different times, might be inclined with respect to the sun at different angles, or may degrade over time. *Id.*, ¶¶ 36–37, 41, and 110 (citing ***Fornage***). Additionally, the operating temperature of a solar panel will impact the amount of electrical power it produces, and temperature will vary from panel to panel depending on orientation and other operating conditions. Ex. 1003, ¶ 110 (citing ***Fornage***).

To efficiently extract power from a solar panel into a load, the load should have the same electrical impedance (i.e., resistance) as the panel, and the impedance of the panel will vary with the amount of power it is producing. Ex. 1003, ¶ 38. Thus, more power can be extracted from a solar panel by impedance matching the panel to its load under various panel operating power levels—a practice referred to in the art as Maximum Power Point Tracking ("MPPT"). *Id.* MPPT tracking is typically done using a DC/DC converter, which converts a relatively low output voltage from the panel or string of panels to a higher, and variable, voltage. *Id.* DC/DC converters used for this purpose are disclosed in the multi-string inverter topology illustrated above, where each string is connected to a DC/DC converter. *See id.*, ¶ 41 (citing ***Kjaer*** and ***Kjaer's*** FIG. 3, Ex. 1008 at 4–5, (above)). The multi-string topology, where an inverter is shared between multiple strings of panels, is advantageous because it permits MPPT to be performed on each string individually. *Id*. This is useful since each string may include different types of solar panels, or solar panels operating under different conditions. *Id*. By performing MMPT on each string individually, and then feeding the DC output of each string to a shared inverter, the overall power output of the installation can be increased, while reducing the number of required inverters and controllers, saving costs. *Id.*, ¶¶ 41–42. Additionally, providing an inverter that is sharable between multiple strings of panels increases flexibility and scalability of

the design, permitting a user to start with a single string, and then plug more strings into the same inverter to expand the system over time. *Id.*

Shared inverters, where a single inverter has multiple DC input ports, are disclosed in references relied on herein, specifically, ***Nishi*** (Ex. 1006) and ***Fornage*** (Ex. 1004) (collectively the "shared inverter references"). *See* Ex. 1003, ¶¶ 45–50 (summarizing the shared inverter references). ***Nishi*** was filed on November 5, 2004 and published on May 19, 2005. Ex. 1006 at 1. ***Nishi*** is prior art under pre-AIA 35 U.S.C. 102(b). ***Fornage*** was filed on July 16, 2007 and published on January 22, 2009. Ex. 1004 at 1. ***Fornage*** is prior art under pre-AIA 35 U.S.C. 102(e). Exemplary shared inverter arrangements from the shared inverter references are illustrated in the annotated figures below.

Nishi (FIG. 2)

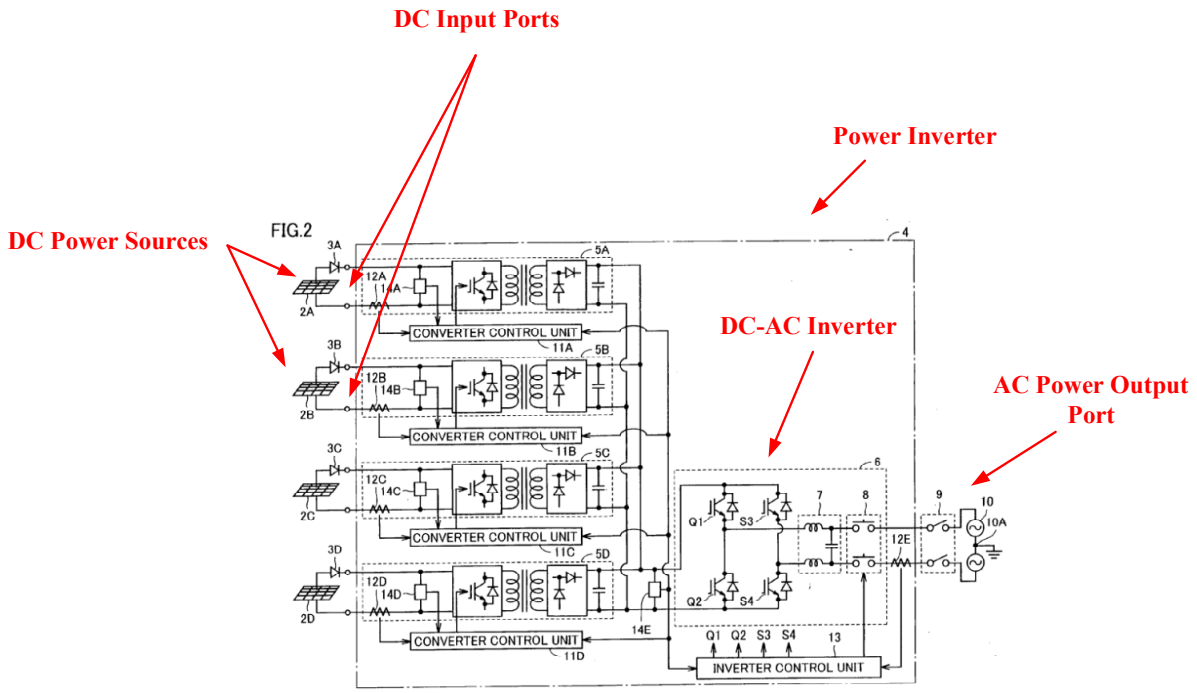

Fornage (FIG. 5):

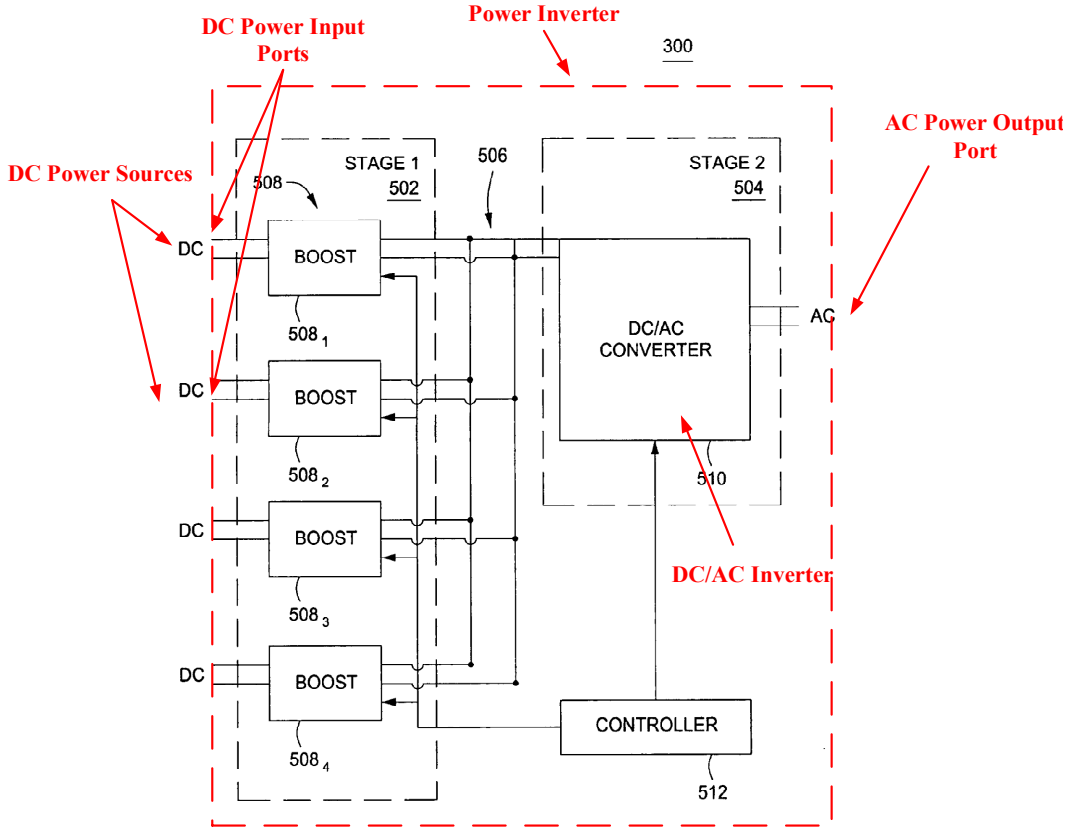

FIG. 5

Connecting multiple inverters in a daisy-chain to combine their AC output power was also known in the art before the priority date of the ’133 Patent, and was known to be advantageous as a means of scaling up a photovoltaic system power by adding additional inverters and solar panels. Ex. 1003, ¶¶ 51–59. This feature was in the prior art before the Examiner, and the Examiner noted that it was disclosed, at least, in ***Aoki***. A daisy-chained inverter arrangement, where multiple inverters are joined between AC Input/Output ports, and the advantages provided thereby, is also disclosed in ***Kondo*** (Ex. 1007). ***Kondo*** was filed on September 24, 2001 and published on April 4, 2002. Ex. 1007 at 1. ***Kondo*** is prior art under pre-AIA 35 U.S.C. 102(b). Exemplary disclosures from Kondo showing daisy-chained inverters are below.

Kondo (FIG. 1)

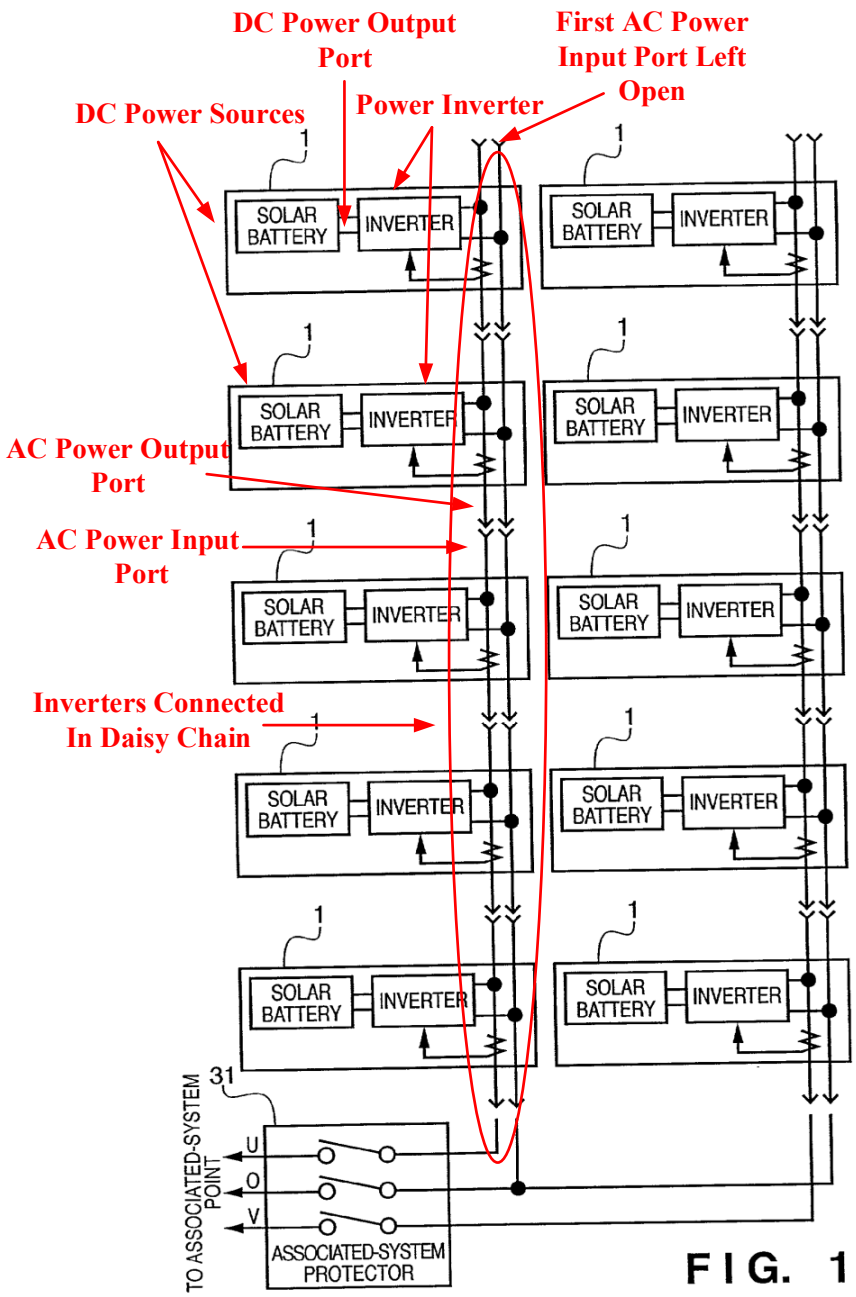

FIG. 1

It would have been obvious to the POSA to combine the teachings of ***Kondo's*** daisy-chained inverters with either of the shared inverter references to gain the advantage of doing MPPT on more than one panel string, while sharing an inverter and an MPPT controller between them to reduce costs and enhance

efficiency. Ex. 1003, ¶ 17. Grounds 1 and 2 show the obviousness of this combination, relying on ***Kondo*** as the primary reference, and ***Nishi*** and ***Fornage*** as the respective secondary references.

It would also have been obvious to take an inverter already having multiple DC inputs and connect it other inverters in a daisy-chain, through AC inputs and outputs. Ex. 1003, ¶ 17. The POSA would have recognized that this modification would allow a user to further expand a solar installation beyond a single inverter. *Id*. The POSA would also have understood that by adding inverters in a daisy-chain was superior to other methods of parallel combination (like using an external AC bus), since daisy-chaining inverters allows each inverter in the chain to sense the total AC current flowing through the chain, so that it can disconnect and reduce current on the bus in the event of an over-current condition. Ex. 1003, ¶¶ 17, 55–60. Ground 3 demonstrates the obviousness of this combination, and relies on ***Fornage*** as the primary reference and ***Kondo*** as the secondary reference.

VIII. CLAIMS 15–21 ARE UNPATENTABLE

A. Ground 1: Claims 15–16, 18–20 and 22–24 are obvious in view of *Kondo* and *Nishi*.

As is shown in the chart below, all elements of claims 15–16, 18–20 and 22–24 are disclosed in the obvious combination of ***Kondo*** and ***Nishi***.

Claim Element	***Kondo* and *Nishi***
15p1: A scalable DC to AC power inversion system for providing AC power to a power grid **19p**: A method of making a DC to AC power conversion system incrementally scalable, comprising:	***Kondo*** (Ex. 1007) discloses a DC to AC power inversion (i.e., conversion) system (the first embodiment shown and described in reference to FIGs. 1–6) for providing power to the grid. *See* Ex. 1003, ¶ 80. ***Kondo's*** arrangement includes inverters that convert DC to AC: "The power conversion unit 21 converts DC power supplied from the solar battery unit 2 to 50/60 Hz and 100V AC power." ***Kondo*** at [0033]. ***Kondo's*** arangement is incrementally scalable: "AC module, integrating a solar battery and an inverter, can easily be connected with other plural AC modules in parallel by way of cascade connections." *Id.,* [Abstract]. ***Kondo's*** system supplies AC power to the grid. *See* 15b3 and FIG. 1, below (referencing the "ASSOCIATED SYSTEM POINT"); ***Kondo*** at [0026] and [0002].
15p2: from a plurality of individual DC power sources each having a DC power output port, comprising: **19a1:** a) providing a plurality of DC power sources	***Kondo*** discloses a plurality of DC power sources, specifically, photovoltaic modules. ***Kondo*** provides "The present invention relates to a solar battery module and a power generation apparatus and, more particularly, to a solar battery module comprising a solar battery and an electronic power converter, and a power generation apparatus utilizing said solar battery module." ***Kondo*** at [0001]. ***Kondo's*** "solar batter[ies]" are photovoltaic modules, which produce DC power from an output port, e.g., an electrode. ***Kondo*** states that a "Solar Battery Unit", shown in FIG. 4 (2), is a "photoelectronic transducer" (e.g., a PV module), where "DC power is outputted from an electrode (not shown) of the solar battery unit 2." *Id.*, [0031]. The non-illustrated "electrode" would be understood as a DC power output port. Ex 1003, at ¶ 81. The DC sources ("solar batteries") are illustrated in FIGs. 1, 3 and 4, below.

Claim Element	***Kondo* and *Nishi***
15a1: a) a plurality of power inverters, each of said power inverters including a single DC-AC inverter, **19a2:** and a plurality of DC to AC power inverters, said DC to AC power inverters each having a single DC-AC inverter,	***Kondo*** (Ex. 1007) discloses a plurality of power inverters, marked as "inverter" in FIG. 1 (below) and "power conversion units" 21 in FIG. 3 (below). Each of ***Kondo's*** power inverters has a single DC-AC inverter (inverter unit 3 in FIG. 3): "The power conversion unit 21 comprises an inverter unit 3, an over current detector 27, and current paths 7, 8 and 9. The power conversion unit 21 converts DC power supplied from the solar battery unit 2 to 50/60 Hz and 100V AC power." ***Kondo*** at [0033]; *see also* Ex. 1003, ¶ 82. The DC-AC inverter (3) is illustrated in FIG. 5 and described at ***Kondo*** [0034]–[0040]. ***Kondo's*** inverters output AC.

Claim Element	*Kondo* and *Nishi*
	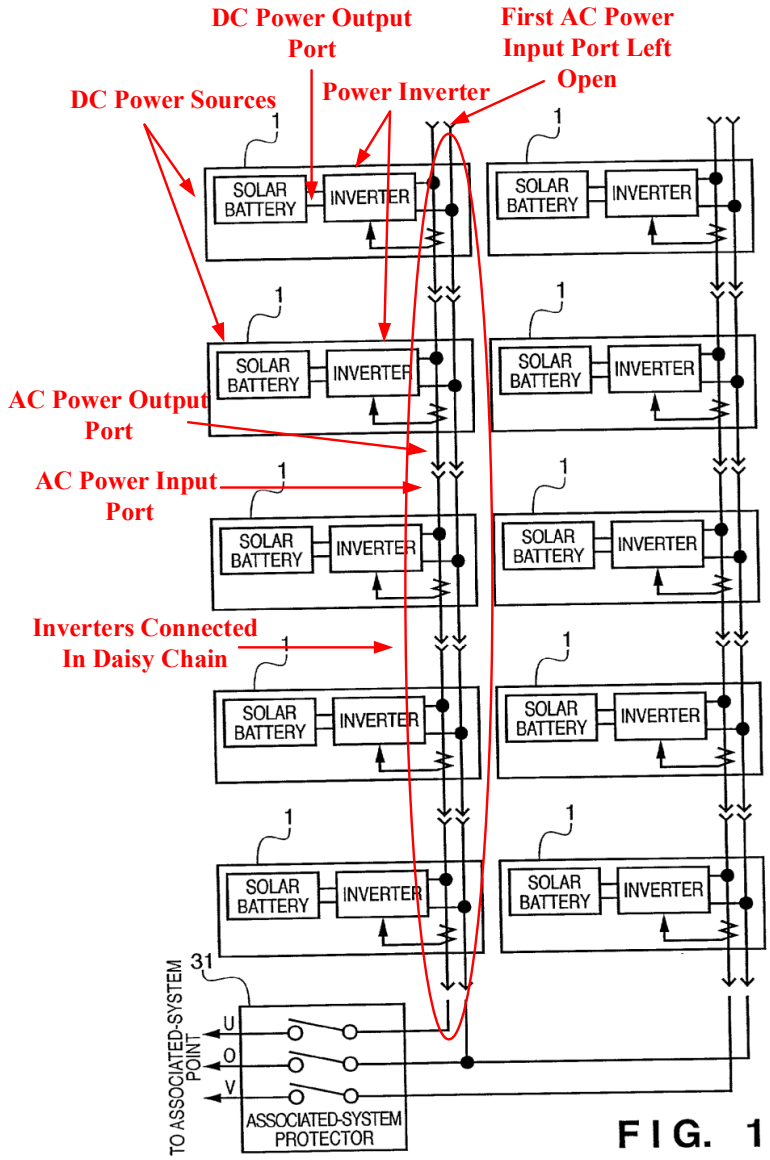

Claim Element	*Kondo* and *Nishi*
	FIG. 3 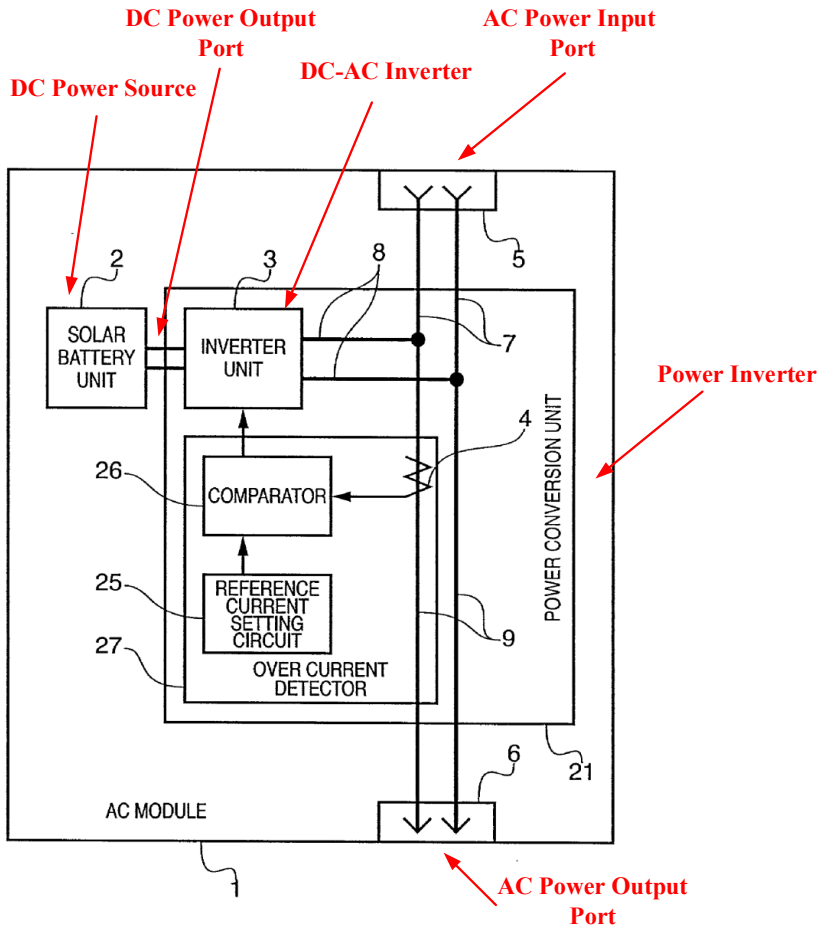
15a2: at least two DC power input ports coupled to the single DC-AC inverter, **19a4**: and at least two DC input ports coupled to the single DC-AC inverter;	***Kondo's*** DC-AC inverter (3) receives DC power from PV module 2 via a DC power input port (18 in FIG. 5, below), and outputs AC. *See* Ex. 1003, ¶¶ 83–84. ***Kondo*** provides "The inverter unit 3 comprises a DC input terminal 18…[and] an AC output terminal 19…" (***Kondo*** [0036]); "By the foregoing feedback control, the inverter unit 3 outputs AC power…" (*Id.* [0040]).

Claim Element	*Kondo* and *Nishi*
	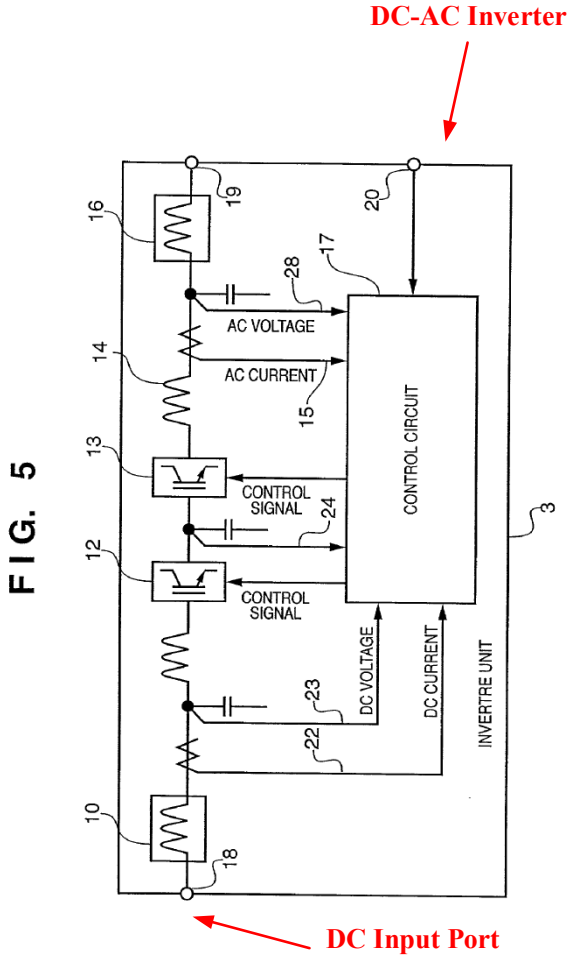 ***Nishi*** (Ex. 1006) discloses a power inverter, "inverter apparatus 4" (*Id.* at [0068] and [0070]), illustrated in FIGs. 1-2. FIG. 2 is annotated below. ***Nishi's*** power inverter (4) has a plurality of DC inputs, shown by the terminals marked in FIG. 2, that take DC power from connected DC sources, solar cell arrays 2A–2D, through DC output ports. *See id.,* [0067]; Ex. 1003, ¶ 85. ***Nishi's*** power inverter (4) includes a single AC/DC converter (inverter 6) coupled to each of the DC inputs. *See* ***Nishi***, [0070], [0067] and [0038] ("an inverter apparatus [is] provided between a plurality of DC power sources and a load for transforming a DC power received from each of the plurality of DC power sources into AC power").

Claim Element	*Kondo* and *Nishi*
	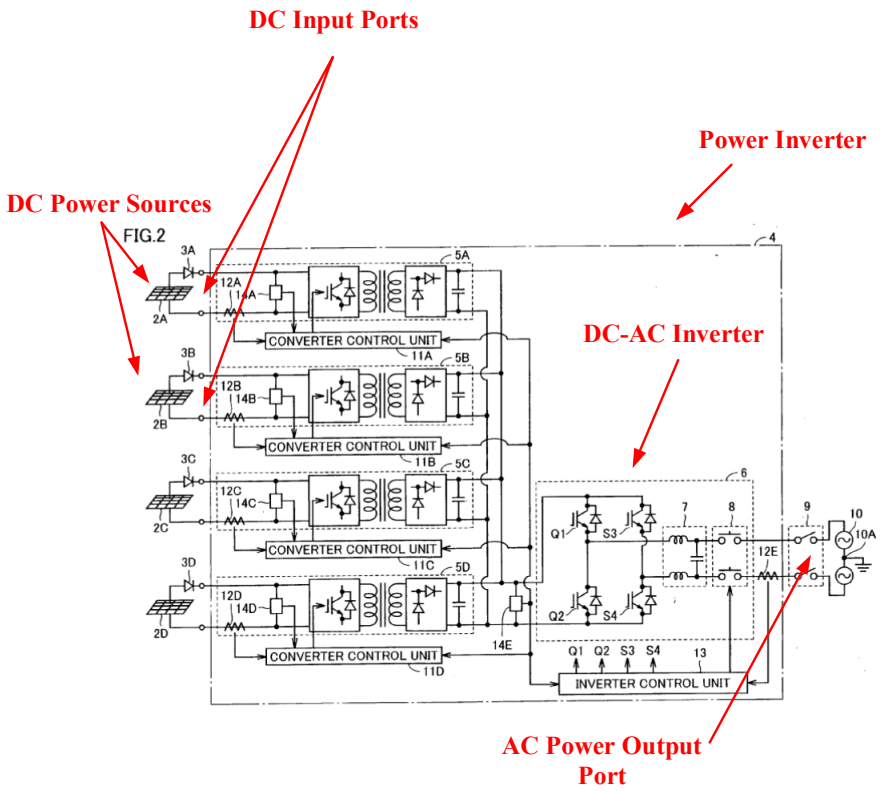 It would have been obvious to incorporate ***Nishi's*** arrangement for providing multiple DC inputs to an inverter with ***Kondo's*** arrangement for daisy-chaining inverters through their AC outputs. The POSA would have been motivated to incorporate ***Nishi's*** shared inverter arrangement because it permits the inverter to optimize the DC power output of more than one connected string of PV modules, operating under different conditions, while sharing inverter, thereby saving cost. Ex. 1003, ¶¶ 86 and 42 (citing ***Kjaer*** and ***Rotzoll '118*** to explain why sharing inverters is advantageous from a cost perspective). ***Nishi*** provides in reference to the embodiment of FIGs 1 and 2: "Here, converter control units 11A–11D each calculate an output power of respective solar cell arrays 2A–2D based on corresponding input voltage detection value and input current detection value, and control respective converters 5A–5D so that the output of respective solar cell arrays 2A–2D becomes maximum." ***Nishi,*** [0077]. One advantage of maximizing input power on each attached string is that overall power is maximized when each string

Claim Element	***Kondo* and *Nishi***
	has different irradiation conditions, and therefore operates at a different voltage. *See id.*, [0061]–[0063] (stating that different solar arrays receiving different amounts of sun will have different output voltage); [0065] (stating that parallel DC/DC converters can adjust solar cell output voltage of all cells to maximized power); Ex. 1003, ¶ 86. Additionally, the POSA would have been motivated to add multiple DC inputs to ***Kondo's*** inverters to provide the ability to accept DC power from different sorts of sources, while reducing component costs by sharing an inverter. Ex. 1003, ¶ 87. In ***Nishi's*** second embodiment, shown in FIG. 6, ***Nishi*** shows an inverter 4A, with a DC-AC inverter 6, receiving DC from solar panels 2A-Dl, but also from fuel cell 16. ***Nishi*** emphasizes the advantages of this ability to generate AC from diverse sources: "Considering the diversification of the DC power sources of practical use, it is highly advantageous to structure a dispersed-power-source system of, a hybrid type that is higher in efficiency and lower in costs." ***Nishi***, [0035],[0047]. Using ***Nishi's*** shared inverter arrangement in the inverter of ***Kondo*** would be a simple substitution of one known element for another, yielding predictable results. Ex. 1003, ¶ 88. ***Kondo***, like ***Nishi***, already provides for one DC input (18 in FIG. 5, above), a DC/DC boost converter ("boost circuit 12"), and a controller ("control circuit 17") for performing MPPT. *See* ***Kondo*** at [0036] ("At this stage, the control circuit 17 performs the well-known optimum operation point tracking control based on DC current 22 and DC voltage 23). Incorporating ***Nishi's*** shared inverter arrangement into ***Kondo*** would simply involve providing additional DC inputs and additional boost circuits controlled by ***Kondo's*** existing controller, and then collecting the total DC output of the boost circuits on a DC bus, and providing it to ***Kondo's*** inverter (13 in FIG. 5, *see* ***Kondo*** at [0036]). This modification is well within the skill of the POSA. Ex. 1003, ¶ 88.

Claim Element	***Kondo* and *Nishi***
15a3: an AC power input port, and an AC power output port coupled to the single DC-AC inverter, **19a3**: an AC input port coupled to the single DC-AC inverter, an AC output port coupled to the single DC-AC inverter,	These elements are disclosed in ***Kondo***. Ex. 1003, ¶ 90. Each of ***Kondo's*** power inverters (21) has an AC power input port (5) and an AC power output port (6), both of which are coupled directly to the DC/AC inverter (inverter unit 3) through "current paths" 8 and 9 in FIG. 3. *See* FIGs 3 and 4 (below); ***Kondo***, [0006] ("an input connector, arranged to input electric power from outside the device; an output connector, arranged to collect the electric power inputted by the input connector and the electric power outputted by the power converter, and output the collected electric power to outside the device"), [0051] ("The DC power generated by the solar battery unit 2 is converted to AC power by the inverter unit 3, sent through the current path 8, collected together with the power, which is generated by other AC modules 1 and inputted from the input connector 5, then sent through the current path 9, and outputted to the output connector 6."), and [0033] ("The converted AC power is collected together with AC power, which is inputted from an input connector 5, and then outputted to an output connector 6."). As shown in FIG. 4, the AC inputs and output may be either direct connections to the power inverter (21), as shown in FIG. 3, or the electrical connectors to those connections, as shown in FIG. 4.

Claim Element	*Kondo* and *Nishi*
	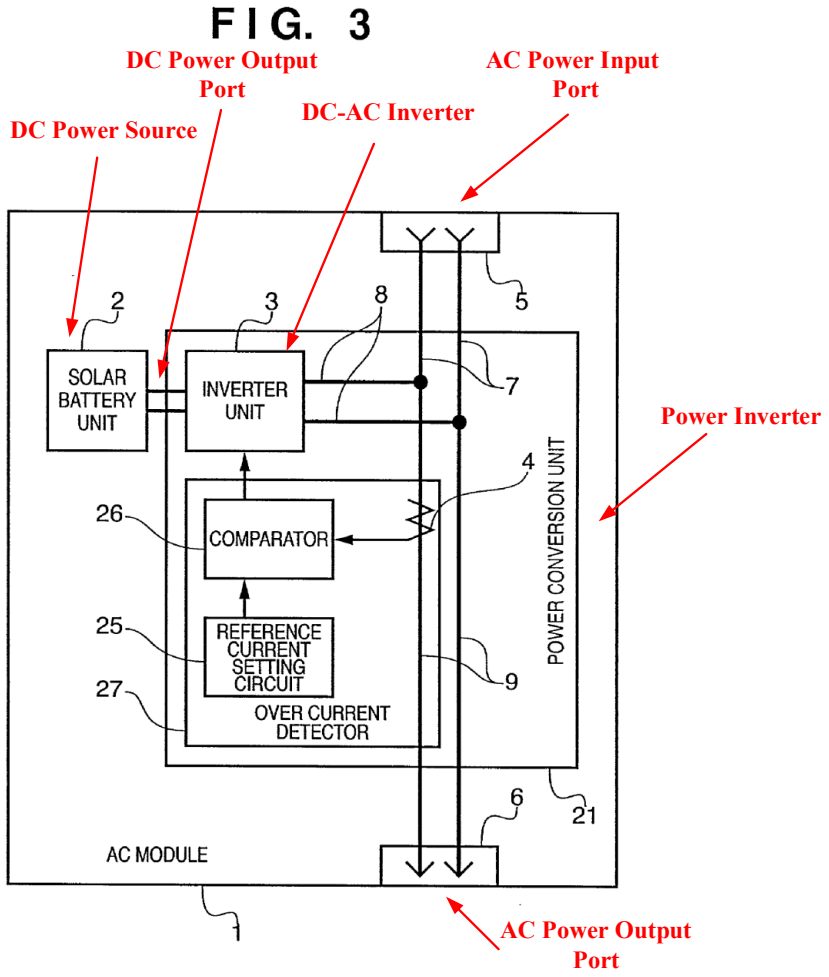

Claim Element	*Kondo* and *Nishi*
	FIG. 4 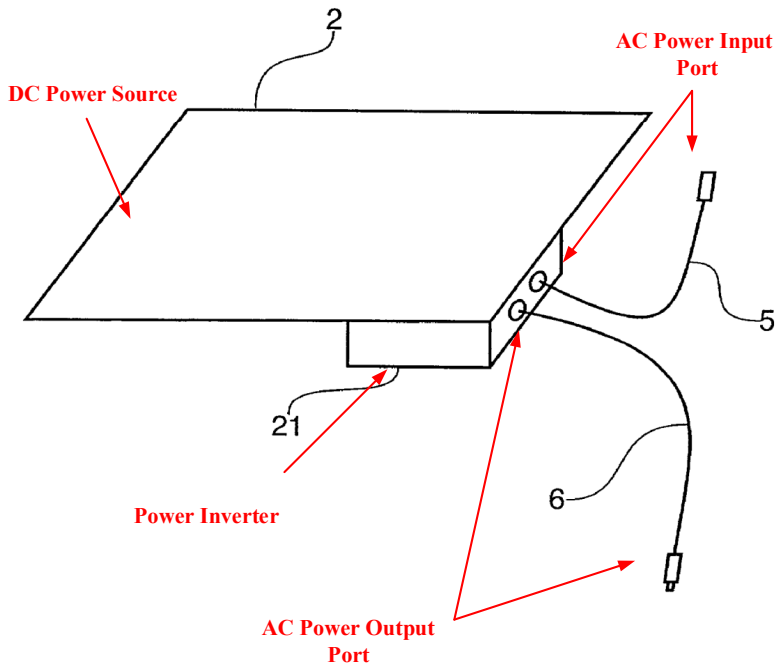
15a4: each of said DC power input ports having one DC power source connected thereto; **19b1**: b) connecting at	These elements are disclosed in both ***Kondo*** and ***Nishi***. Ex. 1003, ¶¶ 85 and 91. ***Kondo's*** power inverters have DC input ports (18 in FIG. 5, above) that are connected to DC sources ("solar batteries" 2 shown and described in the figures above). ***Nishi*** also discloses an inverter with DC power input ports connected to DC sources, shown in the marked terminals in FIG. 2, above.

Claim Element	***Kondo* and *Nishi***
least one of said DC power sources, respectively, to each of said DC input ports; and	
15b1: b) said AC power output port of each power inverter being connected in a daisy-chain to the AC power input port of the next power inverter, **22(a)**: The method of claim 19 further comprising daisy-chaining at least two of said DC to AC power inverters, said AC power output port of each DC to AC power inverter being connected in a daisy-chain to the AC power input port of the next DC to AC power inverter,	These elements are disclosed in ***Kondo***. Ex. 1003, ¶¶ 92 and 51–59 (explaining how ***Kondo's*** connection arrangement is equivalent to the "daisy chain" arrangement explicitly disclosed in ***Rotzoll '118***). In ***Kondo's*** arrangement, the AC power output port (6 in FIG. 3) is connected in a daisy-chain to the AC power input port (5 in FIG. 3) of the next inverter 21 in the chain. This is illustrated in FIG. 1 (above) and FIG. 2 (below). ***Kondo*** refers to the daisy-chain arrangement as a "cascade." *See* ***Kondo*** at [Abstract] ("AC module, integrating a solar battery and an inverter, can easily be connected with other plural AC modules in parallel by way of cascade connections"), [0048] ("The input connector 5 and output connector 6 of the AC module 1 are constructed with a connectable plug and a receptacle provided in a pair. As shown in FIG. 1, the input connector 5 of the AC module 1, which is connected at the end of the cascade connection, is unconnected."). This connection of one inverter to another, resulting in the AC outputs of the inverter being connected together electrically, in parallel, is precisely the arrangement described in the '133 Patent as a "daisy chain." Ex. 1003, ¶ 54 (citing '133 Patent); *see also* '133 Patent (Ex. 1001) at 3:61–64 ("Although we say the power inverters daisy chain, where the output port of each power inverter is connected to the input port of the next power inverter, the actual connection of the inverters is pass-through. That means, the generated AC power from each power inverter is added in parallel onto the AC powerline.").

Claim Element	*Kondo* and *Nishi*
	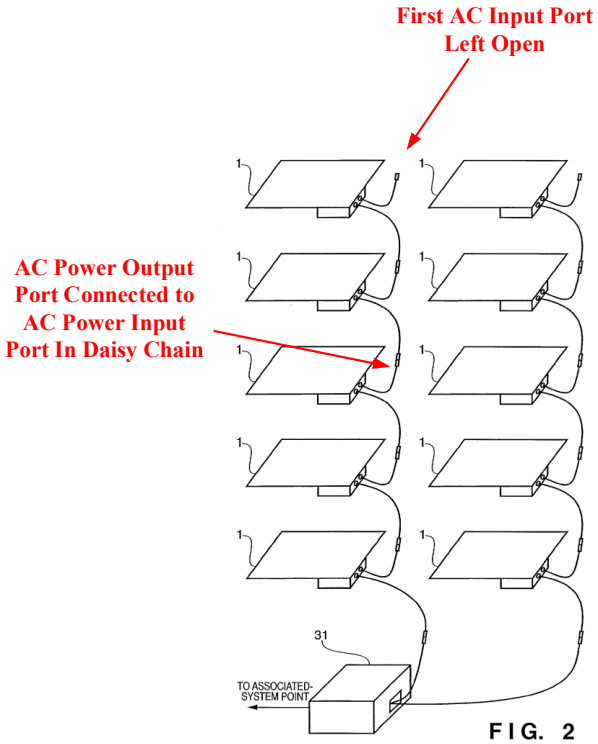
15b2: except for the AC power input port of the first power inverter being left open, **22(b)**: except for the AC power input port of the first DC to AC power inverter being left open,	This element is disclosed in ***Kondo***. Ex. 1003, ¶¶ 53 and 93. As is illustrated in FIGs. 1 and 2 of ***Kondo*** above, the first AC power input port of the daisy-chain is left open. ***Kondo*** provides, "As shown in FIG. 1, the input connector 5 of the AC module 1, which is connected at the end of the cascade connection, is unconnected. Therefore, a receptacle that does not allow easy contact with the electrically activated portion is used for the input connector 5, and a plug is used for the output connector 6." ***Kondo***, [0048].

Claim Element	***Kondo* and *Nishi***
15b3: and the AC power output port of the last power inverter being connected to a power service panel of the power grid; **19c**: c) providing AC power to the power grid. **22(c)**: and the AC power output port of the last DC to AC power inverter being connected to a power service panel of the power grid.	In ***Kondo***, the last power inverter is connected to an "associated system point" through an "associated system protector" 31 (i.e., a breaker panel illustrated as including breaker switches) shown above in FIGs. 1 and 2. *See also* Ex. 1003, ¶ 94. The associated system can be a power grid, which ***Kondo*** calls a "commercial-use power system": "An associated-system protector 31, comprising a switch and a system abnormality detector, is provided between the AC module 1 and a commercial-use power system (hereinafter simply referred to as the system)." ***Kondo***, [0026]. ***Kondo*** also states, generally, that photovoltaic installations are used to supply power to the power grid: "Recently widely available photovoltaic power generation systems include a system-association type, which supplies a commercial-use power system with AC power obtained by an inverter performing DC/AC conversion of power generated by a solar battery, and an independent type which supplies power to a load." *Id.*, [0006]. To the extent that ***Kondo*** does not disclose providing AC power to the grid through a service panel, these elements are disclosed by ***Nishi***. Ex. 1003, ¶ 95. In FIG. 2, reproduced above, the inverter 4 is connected to a breaker 9, and then to "commercial power system 10", i.e., the grid. *See* ***Nishi*** at [0097] ("Inverter 6 transforms a DC power outputted from each of converters 5A–5D into an AC power and outputs the AC power. The AC power outputted from inverter 6 is supplied to commercial power system 10 and household loads, which are not shown, via leakage breaker 9."); *see also id.* at [0003], [0005], and [0016]. The POSA would understand ***Kondo's*** "associated system protector" and ***Nishi's*** "breaker" to be service panels. Ex. 1003, at ¶ 95. To the extent that neither ***Kondo*** nor ***Nishi*** discloses a grid connected service panel, such an arrangement was known in the art and would have been obvious to incorporate so that a user of solar-generated AC could feed loads connected to the service panel, and also receive power from and sell power to the grid. Ex. 1003, ¶¶ 96, and 68–69. These elements are

Claim Element	***Kondo* and *Nishi***
	disclosed in ***Fornage***, as is set forth below in Ground 2. ***Fornage*** (Ex. 1004) at [0005], [0027]. Additionally, the Examiner took official notice of the obviousness of this arrangement: "Official Notice is taken that both the concept and advantages of providing a power service panel connection from a supplemental utility grid co-generation system and providing power to the utility grid are well known and expected in the art." Ex. 1002 at 96.
15c: c) whereby said system is incrementally scalable by adding or subtracting DC power sources and daisy-chained inverters.	***Kondo's*** system may be scaled by adding or subtracting daisy-chained inverters. The reference states that its connection scheme "enables to increase the number of parallel-connected AC modules by sequentially repeating cascade connection". ***Kondo***, [0003]; *see also id.* at [Abstract] ("AC module, integrating a solar battery and an inverter, can easily be connected with other plural AC modules in parallel by way of cascade connections"), [0004] ("enables easy parallel connection of plural AC modules by way of cascade connection"); *see also* Ex. 1003, ¶ 97. ***Nishi's*** system is incrementally scalable by adding or subtracting DC power sources to the shared inverter. The reference provides: "Thus, inverter apparatus 4 in the dispersed-power-source system includes a plurality of converters having different input voltage ranges, and therefore it can transform a DC power outputted from each of a plurality of DC power sources having different output voltage ranges into a commercial AC power, without providing a booster circuit at a front stage or imposing limit on a number of solar cell modules to be connected for constituting an solar cell array." ***Nishi***, [0068]; *see also id.* at [0003] (referring to a "plurality of DC sources"), [0043] (referring to a "plurality of converters" each connected to a DC source). Additionally, ***Nishi*** contemplates that its system may include "at least one first DC power source" and "at least one second DC power source" in the plurality of sources, which suggests that the system may include any number of sources, more than two. *Id.*, [0038].

Claim Element	***Kondo* and *Nishi***
	For the reasons set forth above, it would have been obvious to enhance ***Kondo's*** scalability with the additional ability to add or subtract strings of panels to a single inverter, so that the system could perform MPPT tracking on more than one panel string while sharing an inverter. Ex. 1003 at ¶¶ 97–99.
16. The system of claim 15, in which the output of each of the said power inverters is single phase AC. 20. The method of claim 19, in which the output of each of said power inverters is single phase AC.	***Kondo*** discloses single phase AC. In the first embodiment of ***Kondo***, relied on above, the inverters output single phase AC. *See* ***Kondo*** [0025] ("each AC module 1 has a 100V single-phase output."); Ex. 1003, ¶ 100.
18. The system of claim 15 further comprising a first DC power source connected to one of said DC power input ports of one of said power inverters and a second DC power source different in kind from said first DC power source	***Nishi*** discloses this limitation. Ex. 1003, ¶¶ 101–103. ***Nishi*** provides that different strings of solar panels generating different voltages may be connected to the input ports of the same inverter. *See* ***Nishi***, ¶¶ [0061]–[0063] ("Specifically, under a certain solar radiation condition, solar cell arrays 2A, 2B each output a DC voltage of about 230V, while solar cell arrays 2C, 2D each output a DC voltage of about 70V."), [0068], and FIG. 1. Additionally, ***Nishi*** discloses providing DC outputs from non-solar DC sources to the DC inputs of its shared inverter. *Id.* at [0047] ("Additionally, the inverter apparatus and the dispersed-power-source system according to the present invention can be applied to a home power generation system that transforms a DC power from a plurality of DC power sources constituted of solar batteries, fuel cells, generators or the like into a commercial AC power

Claim Element	*Kondo* and *Nishi*
connected to another of said DC power input ports of said one power inverter. 24. The method of claim 19 further comprising: a) connecting a first DC power source to one of said DC power input ports of one of said power inverters; and b) connecting a second DC power source, different in kind from said first DC power source, to another of said DC power input ports of said one power inverter.	and outputs this AC power to a household load, and that allows the AC power to reversely flow into the commercial power system."). In its second embodiment of FIG. 6 (below), ***Nishi*** discloses a shared inverter arrangement with a non-solar DC source. *Id.*, [0108] ("In a second embodiment, a dispersed-power-source system of the hybrid type in which solar cell arrays and fuel cells are used as DC power sources is shown"). In the FIG. 6 embodiment, DC power from solar cells (2A–D) as well as a fuel cell 16, is provided through an array of DC inputs to "inverter apparatus 4A in place of inverter apparatus 4" (described above). As is seen in FIG. 6, inverter apparatus 4A (a power inverter) includes a single DC/AC inverter 6 (like the one described above in reference to FIG. 2). *See id.*, [0114]. 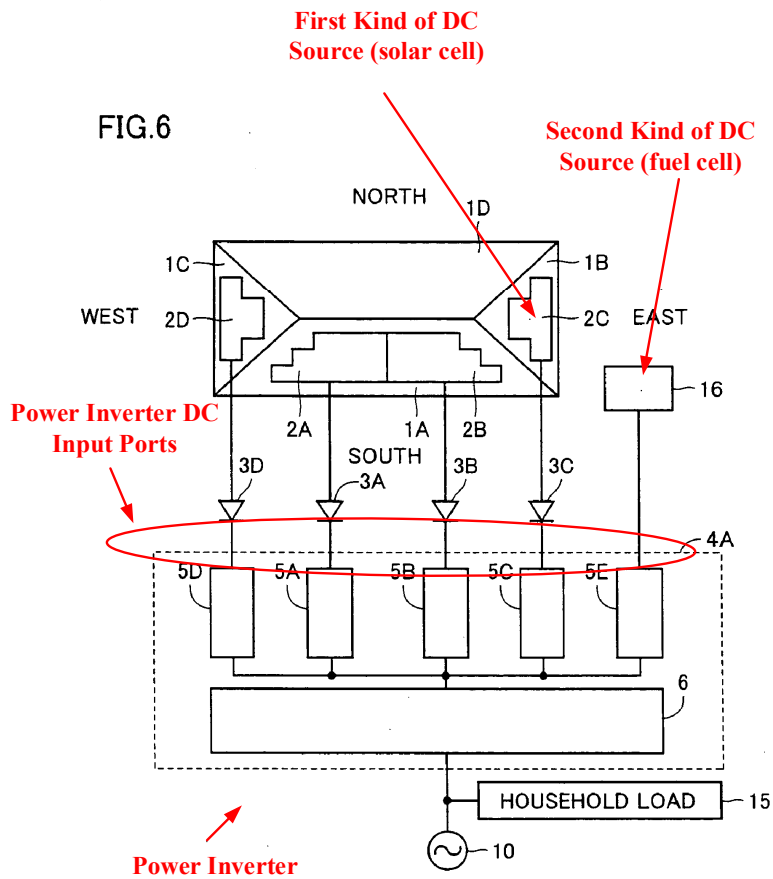 As is set forth above with respect to claim 15, the POSA would have been motivated to incorporate ***Nishi's*** multi-input

Claim Element	***Kondo* and *Nishi***
	inverter topology into the combination precisely to gain the advantage of being able to optimize power output of a collection of solar panels operating under unlike conditions. Ex. 1003, ¶ 104. Additionally, the POSA would have recognized the efficiency benefit of being able to share an inverter between solar cell and non-solar DC sources such as the fuel cell shown in FIG. 6 of ***Nishi.*** *Id*. ***Nishi*** teaches the advantages of this type of "hybrid" system, when it states, "a dispersed-power-source system of a hybrid type can easily be structured with low costs and without reduction of efficiency." ***Nishi***, [0115]. ***Nishi*** further teaches that this sort of system can be easily implemented simply by providing a DC/DC converter having different input ranges (5E) in the input path of the fuel cell. *Id.*, [0112].
23. The method of claim 19 where the providing of AC power includes producing a total AC power that is the summation of the AC power supplied by each said DC to AC power inverter.	***Kondo*** discloses summing the AC power generated by each of its inverters through its daisy chain connection. Ex. 1003, ¶¶ 105–6. ***Kondo*** provides: "The DC power generated by the solar battery unit 2 is converted to AC power by the inverter unit 3, sent through the current path 8, collected together with the power, which is generated by other AC modules 1 and inputted from the input connector 5, then sent through the current path 9, and outputted to the output connector 6." ***Kondo***, [0051]. FIG. 6 shows the summation of AC current contributed by all the modules in the daisy-chain over time as "insolation" (solar irradiation on the solar panels) increases. *See id.*, [0053] (referring to the "collected current values of the AC modules 1 connected in common phase"), [0056] (showing currents being added, with each AC module contributing 0.9A). Since each AC module 1 has an output of 100V AC (*Id.*, [0025]), the summation of the currents shown in FIG. 6 shows a total AC power that is the summation of the AC power outputted by each module in the daisy-chain.

Claim Element	*Kondo* and *Nishi*
	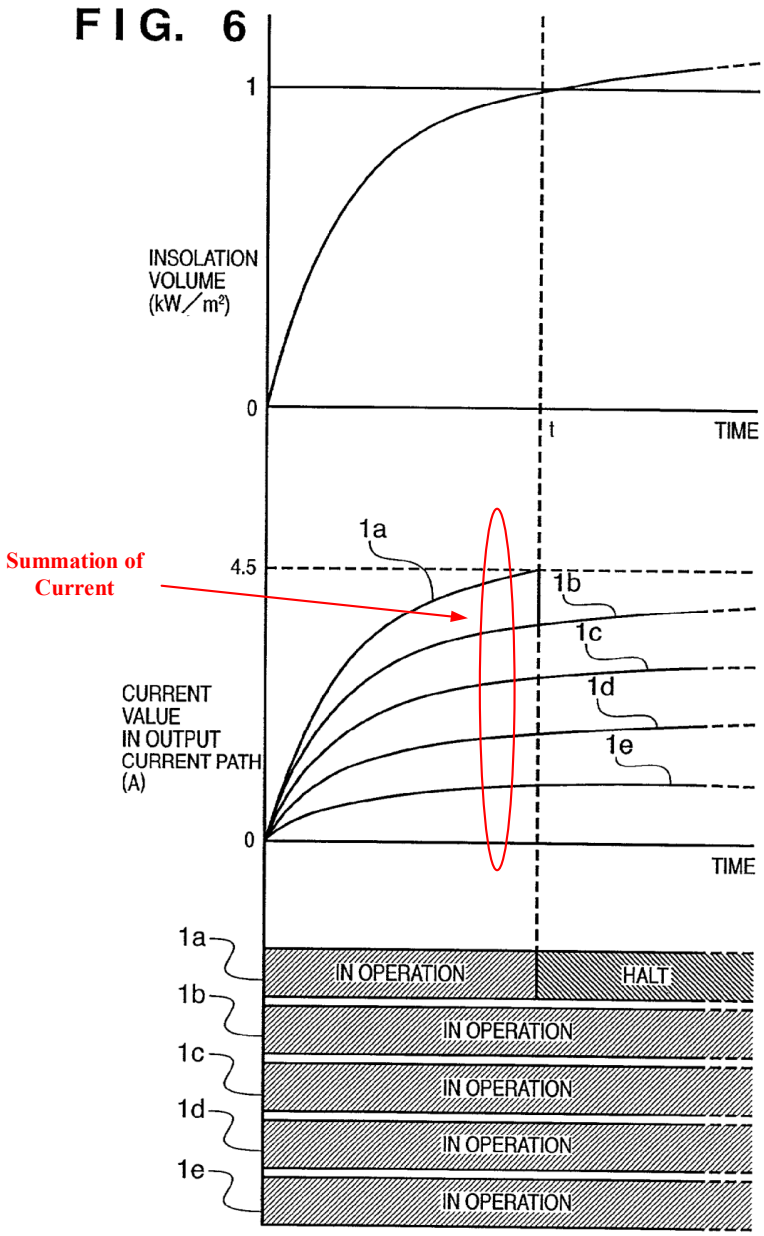

B. <u>Ground 2: Claims 15–16, 18–20 and 22–24 are obvious in view of *Kondo* and *Fornage*.</u>

The combination of ***Kondo*** and ***Fornage*** discloses all elements of claims 15–16, 18–20 and 22–24 The claim chart below incorporates by reference the disclosures of ***Kondo*** and analysis set forth above in Ground 1.

Claim Element	***Kondo* and *Fornage***
15p1: A scalable DC to AC power inversion system for providing AC power to a power grid **19p:** A method of making a DC to AC power conversion system incrementally scalable, comprising:	As set forth in Ground 1, 15p1 and 15c, above, ***Kondo*** discloses these elements. These elements are also disclosed in ***Fornage***. *See* 15c, below.
15p2: from a plurality of individual DC power sources each having a DC power output port, comprising: **19a1**: a) providing a plurality of DC power sources	As is set forth in Ground 1, 15p2, above, ***Kondo*** discloses these elements.
15a1: a) a plurality of power inverters, each of said power inverters including a single DC-AC inverter, **19a2**: and a plurality of DC to AC power inverters, said DC to	As is set forth in Ground 1, 15a1, above, ***Kondo*** discloses these elements.

Claim Element	***Kondo* and *Fornage***
AC power inverters each having a single DC-AC inverter,	
15a2: at least two DC power input ports coupled to the single DC-AC inverter, **19a4**: and at least two DC input ports coupled to the single DC-AC inverter;	As is set forth above in Ground 1, ***Kondo*** discloses an arrangement of daisy-chained inverters, each with an input port connected to a single "solar battery" or DC source. ***Fornage*** (Ex. 1004) discloses, in FIG. 3, a plurality of power inverters ($300_{1\text{-}4}$) connected in a parallel daisy-chain along an AC bus 314: "Each power generator (for example generator 320_1) comprises a plurality of inverters 300_1 (see FIG. 4) and a photovoltaic panel 102_1." ***Fornage***, [0022]. Each inverter 300 can be a shared inverter that receives DC power from a plurality of DC sources, which is the arrangement shown in FIG. 5. Ex. 1003, ¶ 108. ***Fornage*** states "FIG. 5 is a block diagram…of a dual stage inverter 500 that may be used as an inverter 300…." ***Fornage***, [0032]. The inverter 500 of FIG. 5 has a single DC-AC inverter 504: "The second stage 504 comprises a DC/AC converter." *Id.*, [0033]. The inverter 500 of FIG. 5 has at least two DC power input ports connected to the DC/AC converter. These are the DC input lines that are upstream or downstream of the BOOST circuits 508_i shown in FIG. 5 (below). These lines are connected to PV panels (i.e., DC power sources): "The boost circuit 508 receives DC from a DC source, such as rows 404, columns 406, solar cell 402, portions thereof and the like." *Id.*, [0034]. An exemplary pair of DC power input ports is marked in red in FIG. 5, below.

Claim Element	*Kondo* and *Fornage*
	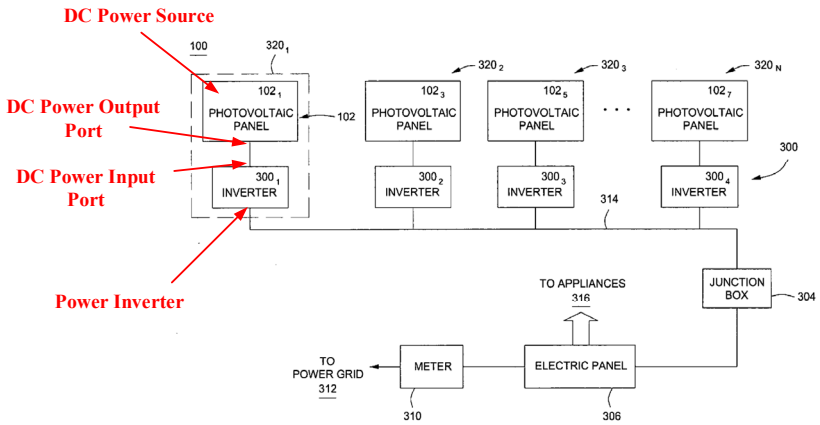 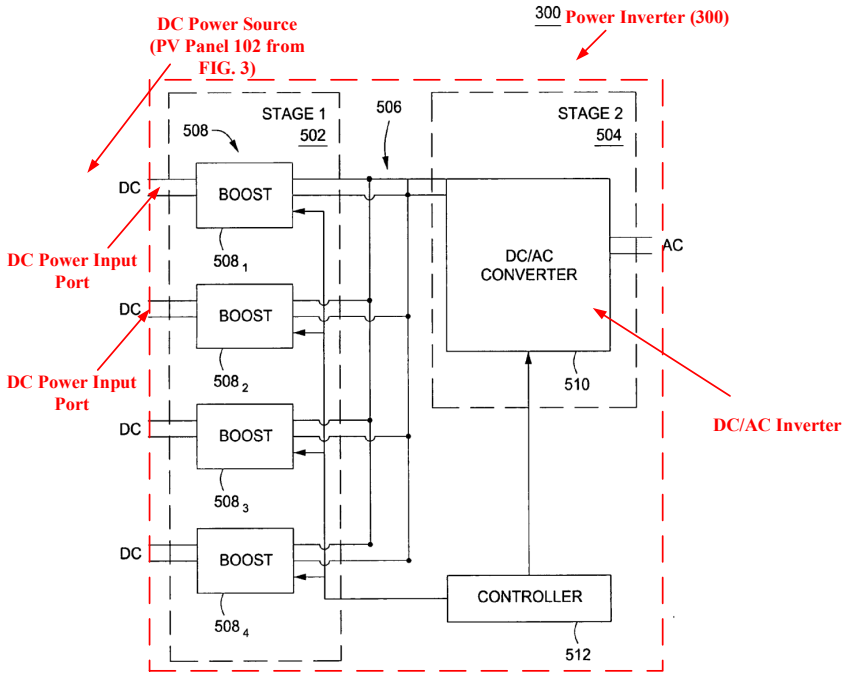 FIG. 5 It would have been obvious to incorporate ***Fornage's*** arrangement for providing multiple DC inputs to an inverter with ***Kondo's*** arrangement for daisy-chaining inverters through their AC outputs/inputs. Ex. 1003, ¶¶ 109–12. The POSA would have been motivated to incorporate ***Fornage's*** shared inverter arrangement because it permits the inverter to optimize the DC power

Claim Element	***Kondo* and *Fornage***
	output of more than one connected string of PV modules, while using the same shared inverter (510) and controller (512), thereby reducing component count and cost. Ex. 1003, ¶ 110. ***Fornage*** provides: "In this embodiment, the boost circuits 508_1, 508_2…508_n share a single DC/AC converter 510." ***Fornage***, [0034]. ***Fornage*** further states: "A controller 512 provides an individual control signal to each boost circuit 508 to ensure that the rows of cells coupled thereto operates [sic] at the row's MPP." *Id.*, [0033]. ***Fornage*** generally recognizes the importance of being able to operate PV modules that are experiencing different levels of irradiation, or have different characteristics, at their optimum peak power point. *See id.*, [0006]–[0007], [0018]–[0019], and [0033]–[0034]. Additionally, the POSA would have recognized that adding ***Fornage's*** multi-input capability would provide for a more flexible and scalable system, where the user could add panels without the need to add inverters. Ex. 1003, ¶ 111. ***Fornage*** recognizes this advantage when it describes the system of FIG. 3, including the multi-input inverters of FIG. 5 as "scalable and flexible to fit any user's needs." ***Fornage***, [0025]. ***Kondo*** also recognizes the importance of flexibility and scalability when it touts the advantage of its system that "enables to increase the number of parallel-connected AC modules by sequentially repeating cascade connection." ***Kondo***, [0003]; *see also id.* at [0004] ("enables easy parallel connection of plural AC modules by way of cascade connection"). The POSA would recognize the advantage of scalability and would recognize that additional scalability could be provided in ***Kondo's*** system with the addition of ***Fornage's*** multi-input inverter. Using ***Fornage's*** shared inverter arrangement in the inverter of ***Kondo*** would be a simple substitution of one known element for another, yielding predictable results. Ex. 1003, ¶ 112. ***Kondo***, like ***Fornage***, already provides for one DC input (18 in FIG. 5, Ground 1, above), a

Claim Element	***Kondo* and *Fornage***
	DC/DC boost converter ("boost circuit 12"), a controller ("control circuit 17") for performing MPPT. *See* ***Kondo***, [0036] ("At this stage, the control circuit 17 performs the well-known optimum operation point tracking control based on DC current 22 and DC voltage 23."). Incorporating ***Fornage's*** shared inverter arrangement into ***Kondo*** would simply involve providing additional DC inputs and additional boost circuits controlled by ***Kondo's*** existing controller, and then collecting the total DC output of the boost circuits on a DC bus (***Fornage***, FIG. 5, 506 described at [0032]–[0033]), and providing it to ***Kondo's*** inverter (***Kondo*** FIG. 5 at 13, described at [0035]–[0036]). This modification is well within the skill of the POSA. Ex. 1003, ¶ 112.
15a3: an AC power input port, and an AC power output port coupled to the single DC-AC inverter, **19a3:** an AC input port coupled to the single DC-AC inverter, an AC output port coupled to the single DC-AC inverter,	As is set forth above in Ground 1, 15a3, ***Kondo*** discloses these elements.
15a4: each of said DC power input ports having one DC power source connected thereto; **19b1:** b) connecting at least one of said DC power sources, respectively, to each of said DC input ports; and	As is set forth above in Ground 1, 15a4, ***Kondo's*** power inverters have DC input ports (18 in FIG. 5, above) that are connected to DC sources ("solar batteries" 2 shown and described in the figures above). ***Fornage*** discloses an inverter with multiple DC power input ports, shown in the marked terminals in FIG. 5, above. These input ports are connected to DC sources, the "Photovoltaic Panels" 102 marked in FIG. 3, above. *See also* ***Fornage***, [0023] ("The photovoltaic panels…are well known in the art and are used for generating DC power from solar energy."); Ex. 1003, ¶ 44.

Claim Element	*Kondo* and *Fornage*
15b1: b) said AC power output port of each power inverter being connected in a daisy-chain to the AC power input port of the next power inverter, **22(a):** The method of claim 19 further comprising daisy-chaining at least two of said DC to AC power inverters, said AC power output port of each DC to AC power inverter being connected in a daisy-chain to the AC power input port of the next DC to AC power inverter,	As is set forth above in Ground 1, 15b1, ***Kondo*** discloses this element.
15b2: except for the AC power input port of the first power inverter being left open, **22(b):** except for the AC power input port of the first DC to AC power inverter being left open,	As is set forth above in Ground 1, 15b1, ***Kondo*** discloses this element.

Claim Element	***Kondo* and *Fornage***
15b3: and the AC power output port of the last power inverter being connected to a power service panel of the power grid; **19c:** c) providing AC power to the power grid. **22(c):** and the AC power output port of the last DC to AC power inverter being connected to a power service panel of the power grid.	As is set forth above in Ground 1, 15b3, ***Kondo*** discloses this element. Providing AC power to the grid through a service panel is also disclosed by ***Fornage***. Ex. 1003, ¶¶ 96 and 113. ***Fornage's*** FIG. 3, above, shows an inverter arrangement for generating AC power that is supplied to an Electric Panel 306, and then to the Power Grid 312. *See* ***Fornage***, [0027]. To the extent that ***Kondo's*** "associated system protector" 31 and "commercial use power system" discussed in ***Kondo*** [0026] do not disclose the claimed power service panel and grid, it would have obvious to incorporate these elements from ***Fornage***. Ex. 1003, ¶¶ 68–69, 96, and 113 (citing the Examiner's Official Notice of these elements). Doing so would enable ***Kondo's*** system to supply power through a home distribution hub (the Electric Panel) to various home circuits and to sell power to the grid. *See* ***Fornage***, [0027].
15c: c) whereby said system is incrementally scalable by adding or subtracting DC power sources and daisy-chained inverters.	As set forth above in Ground 1, 15c, ***Kondo's*** system may be scaled by adding or subtracting daisy-chained inverters. Ex. 1003, ¶ 114. The reference states that its connection scheme "enables to increase the number of parallel-connected AC modules by sequentially repeating cascade connection." ***Kondo***, [0003]; *see also id.*, [0004] ("enables easy parallel connection of plural AC modules by way of cascade connection"), and [Abstract] ("AC module, integrating a solar battery and an inverter, can easily be connected with other plural AC modules in parallel by way of cascade connections."). ***Fornage's*** system is also incrementally scalable. Ex. 1003, ¶ 115. ***Fornage*** states that the system of FIG. 3, including the multi-input inverters of FIG. 5 is "scalable and flexible to fit any user's needs." ***Fornage***, [0025]. ***Fornage*** further provides that its system "may include any number of the photovoltaic panels." *Id.*, [0023]. In connection with FIGs. 3 and 5, ***Fornage*** discloses a system that contemplates an arbitrary number n of inverters 300, and arbitrary number n of DC sources that can be connected to an arbitrary

Claim Element	***Kondo* and *Fornage***
	number n of boost circuits 508. *See* ***Fornage*** FIGs. 3 and 5, [0025], and [0032]–[0034]; *see also* Ex. 1003, ¶ 115. ***Fornage*** also provides "the system 100 may include any number of the photovoltaic panels 102." ***Fornage***, [0023]. It would have been obvious to enhance ***Kondo's*** existing scalability (daisy chaining inverters) with the additional ability to add or subtract strings of panels to a single inverter. Ex. 1003, ¶ 116. Such a system would advance and be motivated by ***Fornage***'s interest in a system that was "scalable and flexible." *Id*., and ***Fornage*** [0023]. Such an enhanced system would allow a user to add panels as needed, without having to add an additional inverter. Ex. 1003, ¶ 116. If more generation capacity was required, additional inverters could be added, as shown in both ***Fornage*** (FIG. 3) and ***Kondo***. Ex. 1003, ¶ 116. The ability to incrementally expand power generating capacity was known to be advantageous in the art, and was recognized, for example, in ***Kjaer***. ***Kjaer*** (Ex. 1008) at 5; Ex. 1003, ¶¶ 41 and 116. Additionally, this enhancement of scalability is inherent after modifying ***Kondo's*** inverters to receive multiple DC inputs. As is set forth above, the POSA would already have been motivated to make this modification in order to gain the ability to do MPPT on individual solar panels while sharing an inverter. Once multiple DC inputs are provided, scaling the system is simply a matter of adding or subtracting sources from the DC inputs already provided by ***Fornage***. *See* Ex. 1003, ¶ 117.
16. The system of claim 15, in which the output of each of the said power inverters is single phase AC. **20**. The method of claim 19, in which the output of each of said	As set forth in Ground 1 above, 16, this element is disclosed by ***Kondo***. ***Fornage*** also teaches that inverters may produce power that is "in-phase with the AC grid current." ***Fornage***, [0024]. As noted by the Examiner during prosecution, it would have been obvious to supply power in whatever phase is usable by the grid and connected home loads. *See* Ex. 1003, ¶¶ 70–71, and 138 (noting that it is obvious to have inverters supply power in

Claim Element	***Kondo* and *Fornage***
power inverters is single phase AC.	whatever phase is appropriate as recognized by ***Rotzoll '654***, ***Kjaer***, and the Examiner).
18. The system of claim 15 further comprising a first DC power source connected to one of said DC power input ports of one of said power inverters and a second DC power source different in kind from said first DC power source connected to another of said DC power input ports of said one power inverter. **24**. The method of claim 19 further comprising: a) connecting a first DC power source to one of said DC power input ports of one of said power inverters; and b) connecting a second DC power source, different in kind from said first DC power source, to another of said DC power input ports of said one power inverter.	***Fornage*** discloses connecting different in kind DC sources to its inverter arrangements. ***Fornage*** notes that "[d]ue to manufacturing tolerances, all solar cells have different characteristics." ***Fornage***, [0007]. Additionally, ***Fornage*** observes that in certain installations some solar cells will be in full sun, and other may be shaded. *Id*.; *see also* [0018]–[0019], and FIG. 1 (describing and illustrating a condition where some cells in a panel are in full sun and others are partially shaded). ***Fornage*** notes further that the panels described in the embodiment of FIG. 3 may be "of any size or shape." *Id.*, [0023]; s*ee also* Ex. 1003, ¶ 139. As is set forth above with respect to claim 15, the POSA would have been motivated to incorporate ***Fornage's*** multi-input inverter topology into the combination precisely to gain the advantage of being able to optimize power output of a collection of solar panels operating under unlike conditions. Ex. 1003, ¶ 110.

Claim Element	***Kondo* and *Fornage***
23. The method of claim 19 where the providing of AC power includes producing a total AC power that is the summation of the AC power supplied by each said DC to AC power inverter.	As set forth in Ground 1 above, 23, this element is disclosed by ***Kondo***.

C. <u>Ground 3: Claims 15–16, 18–20 and 22–24 are obvious in view of *Fornage* and *Kondo*.</u>

As is shown in the chart below, all elements of claims 15–16, 18–20 and 22–24 are disclosed in the combination of ***Fornage*** and ***Kondo***. For Ground 3, ***Fornage***, with its disclosure of multi-input inverters connected together along an AC bus, is the primary reference. It would have been obvious to modify ***Fornage's*** arrangement with ***Kondo's*** teaching of daisy chaining inverters together through AC input and output ports, essentially, bringing ***Fornage***'s AC bus *through* each inverter. The POSA would have been motivated to make this modification to allow each inverter sense total current on the bus and take corrective action. *See* Ex. 1003, ¶¶ 118, and 55–60. The chart below incorporates the disclosure and analysis set forth in Grounds 1 and 2 with respect to ***Kondo*** and ***Fornage***.

Claim Element	***Fornage* and *Kondo***
15p1: A scalable DC to AC power inversion system for providing AC power to a power grid **19p**: A method of making a DC to AC power conversion system incrementally scalable, comprising:	***Fornage*** discloses a DC to AC inversion system (*see* FIG. 3, "INVERTER" 300_i and FIG. 5 (300 and "DC/AC CONVERTER" 510). *See* ***Fornage***, [0024] ("The inverter 300_1, 300_2 … 300_n, converts DC power generated by the plurality of photovoltaic panels 102_1, 102_2…102_n into AC power."). ***Fornage's*** systems of FIG. 3 are "scalable and flexible to fit any user's needs" because an arbitrary number n of inverters 300 may be connected in parallel along an AC bus 314, as shown in FIG. 3, below. *See id.*, [0022] and [0025]. Additionally, ***Fornage*** discloses an arbitrary number of DC sources connected to each inverter as shown in FIG. 5. *Id.*, [0033] (disclosing an arbitrary number n of boost circuits 508), [0034] (disclosing that each boost circuit is coupled to a DC source"). ***Fornage*** also provides "the system 100 may include any number of the photovoltaic panels 102." ***Fornage's*** system provides AC power to a power grid: "The system 100 supplies power to a power grid 312, appliances 316, or both." *Id.*, [0023]; s*ee also* Ex. 1003, ¶ 119.
15p2: from a plurality of individual DC power sources each having a DC power output port, comprising: **19a1**: a) providing a plurality of DC power sources	***Fornage's*** system includes a plurality of DC power sources, photovoltaic panels 102_i, shown in FIG. 3: "The photovoltaic panels 102_1, 102_2 . . . 102_n are well known in the art and are used for generating DC power from solar energy." ***Fornage***, [0023]. Each photovoltaic panel must necessarily have a DC power output port to connect to ***Fornage's*** inverter. *See* ***Fornage*** FIGs. 3 and 5, below. To the extent that ***Fornage*** does not explicitly disclose an "output port", it would have been obvious to incorporate ***Kondo's*** "electrode" for the purpose of getting power out of the solar panels. *See* Ex. 1003, ¶ 120.

Claim Element	*Fornage* and *Kondo*
	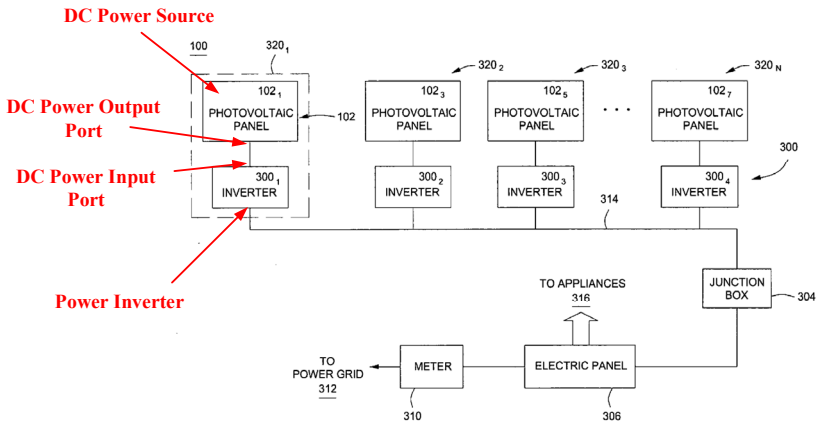 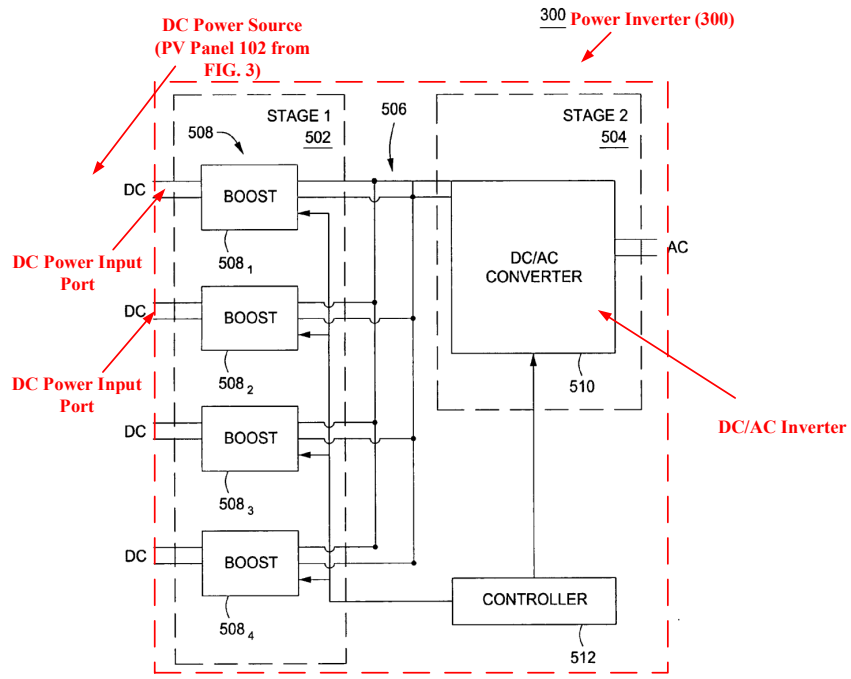 FIG. 5
15a1: a) a plurality of power inverters, each of said power inverters including a single DC-AC inverter, **19a2**: and a plurality of DC to AC power	In FIG. 3, ***Fornage*** shows a plurality of power inverters ($300_{1\text{-}4}$): "Each power generator (for example generator 320_1) comprises a plurality of inverters 300_1 (*see* FIG. 4) and a photovoltaic panel 102_1." ***Fornage***, [0022]. Each inverter 300 can be a shared inverter that receives DC power from a plurality of DC sources, which is the arrangement shown in FIG. 5. ***Fornage*** states "FIG. 5 is a block diagram…of a dual stage inverter 500 that may be

Claim Element	***Fornage* and *Kondo***
inverters, said DC to AC power inverters each having a single DC-AC inverter,	used as an inverter 300…" *Id.*, [0032]. The inverter 500 of FIG. 5 has a single DC-AC inverter 504, which contains a DC/AC Converter 510: "The second stage 504 comprises a DC/AC converter." *Id.*, [0033]. The POSA would understand either the second inverter stage 504 or its DC/AC converter to be a DC-AC inverter, since these components convert DC to AC. *See* Ex. 1003, ¶ 121; and ***Fornage*** [0032]–[0034].
15a2: at least two DC power input ports coupled to the single DC-AC inverter, **19a4**: and at least two DC input ports coupled to the single DC-AC inverter;	***Fornage's*** inverter 500 of FIG. 5 has at least two DC power input ports connected to the DC/AC converter. Ex. 1003, ¶ 122. These are the DC input lines that are upstream or downstream of the BOOST circuits 508_i shown in FIG. 5 (above). These lines are connected to PV panels (i.e., DC power sources): "The boost circuit 508 receives DC from a DC source, such as rows 404, columns 406, solar cell 402, portions thereof and the like." ***Fornage***, [0034]. These input ports are connected to the boost circuits, then to DC bus 506 and then to the single DC-AC inverter 504 or DC/AC Converter 510. *See id.*, [0033] ("The boost circuits 508 are coupled by a DC bus 506…the bus 506 coupes the combined DC outputs of the boost circuits 508 to the DC/AC converter 510."). An exemplary pair of DC power input ports is marked in red in FIG. 5, above.
15a3: an AC power input port, and an AC power output port coupled to the single DC-AC inverter, **19a3**: an AC input port coupled to the single DC-AC inverter, an AC output port coupled to the single DC-AC inverter,	***Fornage*** discloses each of its power inverters (300) having at least an AC output port coupled to the inverter. ***Fornage's*** AC output ports are coupled to an AC bus 314 shown in FIG. 3 (below). The reference provides: "The inverters 300_1, 300_2 . . . 300_n couple the output AC to an AC bus 314. … the system 100 is scalable and flexible to fit any user's needs." ***Fornage***, [0025]; *see also id.* [0022] and [0024] (explaining that the inverters 300 convert DC to AC). Where the inverter 300 is a two-stage inverter, as shown in FIG. 5, the AC output port comes from the single DC-AC inverter, Converter 510 (or second stage 504). The AC output port is marked "AC" in FIG. 5. Thus, ***Fornage***

Claim Element	*Fornage* and *Kondo*
	already discloses inverters connected in a daisy-chain via an external AC bus, as shown in FIG. 3. Ex. 1003, ¶ 123. 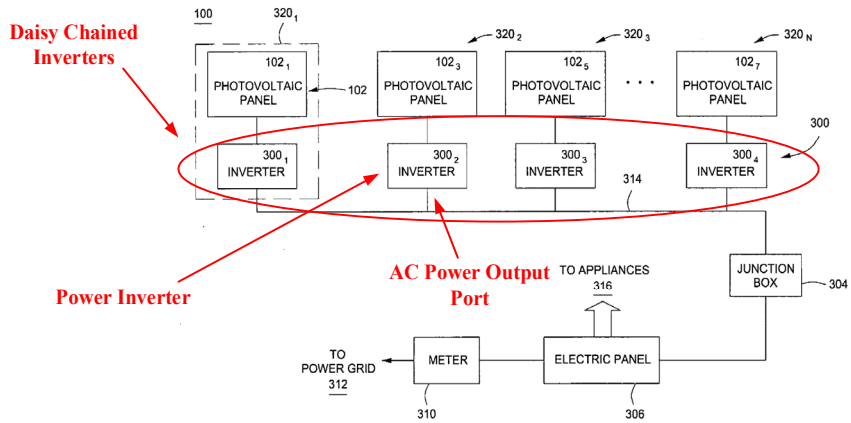 To the extent that ***Fornage's*** disclosure of inverters having an AC output port coupled to an AC bus does not disclose an AC input port and an AC output port, it would have been obvious to add these features from ***Kondo.*** *See* Ex. 1003, ¶¶ 124–132. As is set forth in **15a3** for Grounds 1 and 2, above, ***Kondo*** discloses a daisy-chained inverter arrangement where inverters are connected through AC input/output ports.

Claim Element	*Fornage* and *Kondo*
	FIG. 3 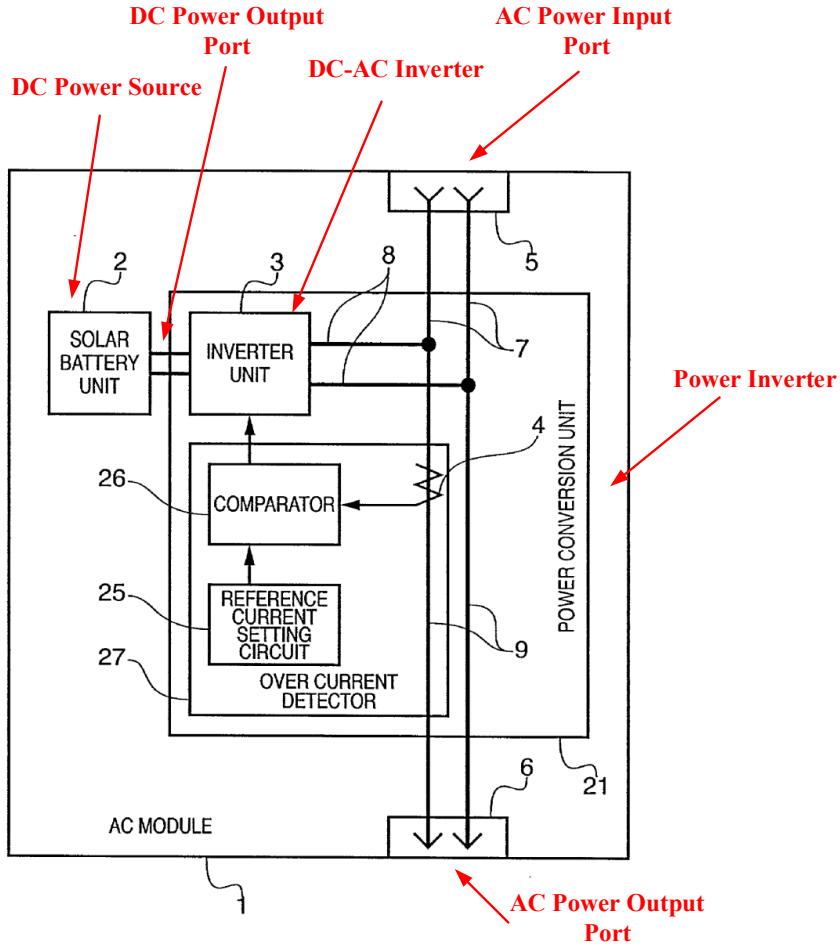 It would have been obvious to modify ***Fornage's*** arrangement of a chain of inverters connected along an external AC bus (shown in ***Fornage*** FIG. 3, above) with ***Kondo's*** teaching of providing AC input/output ports to route the AC bus through each inverter, i.e., along "conduction path[s]" 7 and 9 shown in ***Kondo*** FIG. 3, above. ***Kondo*** notes that interconnection of multiple inverters (e.g., in the manner of ***Fornage*** FIG. 3) can result in too much AC current on the bus if too many are connected or if the connected panels receive too much light: "when the number of AC modules connected is improvidently increased, the current flowing through the current path or connector of the AC module exceeds a rated current." ***Kondo*** at [Abstract]; *see also* [0004]. ***Kondo*** notes that in the prior art, when the current

Claim Element	***Fornage* and *Kondo***
	provided by the connected inverters exceeded a rating, the solution was to disconnect the entire system from the grid. ***Kondo*** describes high current conditions "where the associated-system protector 31 [i.e., a breaker] detects an over current and disconnects the switch therein." ***Kondo***, [0057]; *see also* Ex. 1003, ¶¶ 126 and 127 (explaining why ***Kondo's*** concern about too much current during periods of high sunlight would also apply to ***Fornage's*** arrangement of FIG. 3, which also accumulates current generated by all the inverters.). The POSA considering ***Fornage's*** external AC bus and ***Kondo's*** concerns with overcurrent would have been motivated to adopt ***Kondo's*** solution to this problem, which is to route the AC bus *through* each inverter (as shown in ***Kondo*** FIGs. 1–3, above). Ex. 1003, ¶¶ 126–130 and 55–59. This allows each inverter to monitor the current on the bus and take corrective action if needed: "In view of this, the current detector detects a current in the collective-power current path of the AC module, and when the detected current value exceeds a value set in the reference current setting circuit, the current detector stops the inverter." ***Kondo*** at [Abstract]; *see also* Ex. 1003, ¶¶ 55–57 and 128 (explaining how ***Kondo*** FIG. 6 shows shutdown of an inverter that detects too much current). ***Kondo's*** inverters are provided with an overcurrent detector (FIGs. 3, 27) which measures current running through the inverter, between the AC input and AC output, and directs the DC-AC inverter 3 to stop producing additional current if the current on the conductive path is too high. *See* ***Kondo***, [0046]; Ex. 1003, ¶¶ 56–57, and 128. In ***Kondo's*** system inverters on the chain that are close to the end and that sense accumulated current above some threshold are shut down, and the overall system continues to generate power at near maximum current. *See* ***Kondo***, [0057]; Ex. 1003, ¶¶ 58, 129. This is an advantage over prior art systems (e.g., ***Fornage*** FIG. 3) which sense overcurrent at the grid connection and disconnect all

Claim Element	***Fornage* and *Kondo***
	connected inverters in the event of overcurrent. *See* ***Kondo***, [0057]; Ex. 1003, ¶¶ 59, 129. The reference provides: "As described above, in the AC module 1 according to the first embodiment, it is possible to prevent over current flow in the current path 9 and the output connector 6. Unlike the configuration where the associated-system protector 31 detects an over current and disconnects the switch therein, even in a case where a sudden increase is found in the insolation, AC modules 1 other than the one closest to the associated-system point can continue their operation because power conversion of the AC module 1 is halted sequentially from the one closest to the associated-system point." ***Kondo***, [0057]. The POSA would understand that ***Fornage's*** parallel connection of inverters along an AC bus, shown in FIG. 3, could be improved by ***Kondo's*** teaching of providing AC inputs and outputs such that the AC bus runs through daisy-chained inverters, where it can be monitored by overcurrent monitors. Ex. 1003, ¶¶ 56, and 126–127. ***Kondo's*** arrangement enables inverters in the chain close to the grid ("associated-system point") to detect overcurrent and shut down, enabling the remaining inverters to continue producing during high irradiation ("insolation") conditions. Ex. 1003, ¶¶ 56, 129. The POSA would recognize that this improvement is made simple by running the current through the inverters, as in ***Kondo***, so that each inverter can measure the current on the bus, and determine whether it can add more. Ex. 1003, ¶¶ 59,130. ***Fornage's*** external bus of FIG. 3 was ready for this improvement, because in that configuration, it is not as simple to sense current on the bus. Ex. 1003, ¶¶ 59, 130. Modifying ***Fornage's*** arrangement with ***Kondo*** in this manner would also advance ***Fornage's*** interest in a system that is "scalable and flexible to fit any user's needs" (***Fornage***, [0025]), because it enables inverters to be added

Claim Element	***Fornage* and *Kondo***
	easily and without concern that the system will be shut down entirely in the event of overcurrent produced by high light conditions. Ex. 1003, ¶ 131. For the same reasons, ***Kondo's*** improvement also furthers ***Fornage*** interest in maximizing power and efficiency. *See* ***Fornage*** [0020]; Ex. 1003, ¶ 131. ***Kondo*** also suggests to the POSA that its improvement allows for "easily" connecting inverters together, through AC input and output ports, as shown in Kondo's FIG. 2 and as ***Kondo*** notes "AC module, integrating a solar battery and an inverter, can easily be connected with other plural AC modules in parallel by way of cascade connections." ***Kondo***, Abstract; Ex. 1003, ¶125. Additionally, the POSA would understand that the modification would be simple, predictable and well within the skill of the art. Ex. 1003, ¶ 132. ***Fornage's*** parallel bus connection shown in FIG. 3 would simply be modified such that the bus ran through each inverter in the chain, as shown in FIGs. 1–3 of ***Kondo***. This could be accomplished by adding ***Kondo's*** AC input and output ports and current paths to the second stage (504) shown in ***Fornage's*** FIG. 5. Ex. 1003, ¶ 132. The POSA would also add ***Kondo's*** overcurrent detector 27, such that ***Fornage's*** controller 512 was directed to stop producing power in the event of an overcurrent condition. *Id.*
15a4: each of said DC power input ports having one DC power source connected thereto; **19b1**: b) connecting at least one of said DC power sources, respectively, to each of said DC input ports; and	***Fornage*** discloses DC power input ports (marked in FIG. 5, above) connected to DC power sources (PV panels 102_n shown in FIG. 3, above. *See* ***Fornage***, [0034] (referring to FIG. 5) ("The boost circuit 508 receives DC from a DC source, such as rows 404, columns 406, solar cell 402, portions thereof and the like."); Ex. 1003, ¶ 133.

Claim Element	***Fornage* and *Kondo***
15b1: b) said AC power output port of each power inverter being connected in a daisy-chain to the AC power input port of the next power inverter, **22(a)**: The method of claim 19 further comprising daisy-chaining at least two of said DC to AC power inverters, said AC power output port of each DC to AC power inverter being connected in a daisy-chain to the AC power input port of the next DC to AC power inverter,	***Fornage*** already discloses daisy-chained parallel connected inverters. *See* ***Fornage*** FIG. 3, above (showing inverters 300 connected in a chain to bus 314); Ex. 1003, ¶ 123. For the reasons set forth in **15a3** above, it would also have been obvious to modify ***Fornage's*** daisy-chain arrangement on an external bus with ***Kondo's*** teaching of daisy-chaining inverters together through AC input/output ports so that each inverter in the chain could detect an overcurrent condition. Note again that ***Kondo***'s connection of one inverter to another, resulting in the AC outputs of the inverter being connected together electrically in parallel, is precisely the arrangement described in the '133 Patent as a "daisy chain." Ex. 1003, ¶ 54 (citing the '133 Patent (Ex. 1001) at 3:61–64).
15b2: except for the AC power input port of the first power inverter being left open, **22(b)**: except for the AC power input port of the first DC to AC power inverter being left open,	As is set forth in Grounds 1 and 2, **15b2** above, ***Kondo*** discloses the AC input port of the first inverter in the chain being left open. *See* ***Kondo*** FIG. 2, above and [0047]–[0048] (describing the first AC input port as "unconnected"). An unconnected first AC input would necessarily result from adding AC inputs and AC outputs to ***Fornage***'s inverters to route the AC bus through each inverter, and the POSA would not have been motivated to make the upstream most inverter different to avoid this result. Ex. 1003, ¶ 135.

Claim Element	***Fornage* and *Kondo***
15b3: and the AC power output port of the last power inverter being connected to a power service panel of the power grid; **19c**: c) providing AC power to the power grid. **22(c)**: and the AC power output port of the last DC to AC power inverter being connected to a power service panel of the power grid.	As set forth in Ground 2, **15b3** above, both references disclose this limitation or alternatively, it would have been obvious to add for the purpose of supplying power to household loads (e.g., appliances) and for selling power to the grid utility. *See* Ex. 1003, ¶ 136 (citing Office Notice of these elements taken by the Examiner); ***Fornage***, [0022], [0027], and FIG. 3 (showing "grid" 312 and "electric panel" 306).
15c: c) whereby said system is incrementally scalable by adding or subtracting DC power sources and daisy-chained inverters.	As set forth above, ***Fornage*** discloses scalability, both in terms of the number of DC sources shared by an inverter, and in terms of the number of parallel connected inverters. Ex. 1003, ¶ 137. ***Fornage*** provides: "Using such an AC bus 314 and discrete power generators 320_n, the system 100 is scalable and flexible to fit any user's needs." ***Fornage***, [0025]. ***Fornage*** also provides that "system 100 may include any number of inverters 300…" *Id.*, [0032]. ***Fornage*** also provides "Although three panels are shown, the photovoltaic panel system 100 may include any number of panels 102." *Id.*, [0017]. ***Kondo*** is also scalable, and in fact, improves the scalability of ***Fornage*** because it detects and deals with overcurrent conditions. ***Kondo*** states that its connection scheme "enables to increase the number of parallel-connected AC modules by sequentially repeating cascade connection." ***Kondo*,** [0003]; *see also id.*, [0004] ("enables easy parallel connection of plural AC modules by way of cascade connection"), and [Abstract].

Claim Element	***Fornage* and *Kondo***
16. The system of claim 15, in which the output of each of the said power inverters is single phase AC. **20**. The method of claim 19, in which the output of each of said power inverters is single phase AC.	***Fornage*** provides, "The inverters **300** of the present invention may produce current that is in-phase with the AC grid current and generate such current with low distortion." ***Fornage***, [0024]. It would have been obvious to configure ***Fornage's*** inverters to output single phase AC if that was required by the connected grid 312 or loads fed by ***Fornage's*** service panel 306. Ex. 1003, ¶ 138. It was well-known in the art for a solar inverter system to output single or three phase AC depending on the type of load or grid connection to which the solar system was interfacing. *See* ***Kjaer*** (Ex. 1008) at 4–5 and FIG. 3; ***Rotzoll '654*** (Ex. 1009) at [0007] ("Residential systems commonly utilize single phase AC, while commercial systems most often use three phase AC."); Ex. 1003, ¶ 138. ***Kondo*** explicitly discloses that its inverters have a single-phase AC output. *See* ***Kondo***, [0025]. Thus, it would have been obvious to incorporate ***Kondo's*** single phase inverter output where required to drive connected loads or to sync to the grid. Ex. 1003, ¶ 138.
18. The system of claim 15 further comprising a first DC power source connected to one of said DC power input ports of one of said power inverters and a second DC power source different in kind from said first DC power source connected to another of said DC power input ports of said one power inverter.	***Fornage*** discloses the use of its system with DC sources that are different in-kind, namely, photovoltaic cells in different states of irradiation that produce different levels of power, as well as cells that have different characteristics due to "temperature", "aging" and "manufacturing tolerances" and panels that are "any size or shape" *See* ***Fornage***, [0007], [0017]–[0018], [0023]; Ex. 1003, ¶ 139.

Claim Element	*Fornage* and *Kondo*
24. The method of claim 19 further comprising: a) connecting a first DC power source to one of said DC power input ports of one of said power inverters; and b) connecting a second DC power source, different in kind from said first DC power source, to another of said DC power input ports of said one power inverter.	
23. The method of claim 19 where the providing of AC power includes producing a total AC power that is the summation of the AC power supplied by each said DC to AC power inverter.	***Fornage*** provides, in connection with FIG. 3 (above): "The junction box 304 generally connects together the outputs from all the inverters 300_1, 300_2…300_n to form a single AC feed to the electric panel 106." ***Fornage***, [0026]. Similarly, as is set forth in Ground 1, 23 above, ***Kondo*** also discloses this element (*see* ***Kondo*** FIG. 6, showing summation of currents), and in fact, its overcurrent protection feature is designed to accommodate large summations of current caused by a daisy-chain arrangement. *See* Ex. 1003, ¶ 140.

D. <u>Ground 4: Claims 17 and 21 are obvious in view of any of the combinations of Grounds 1–3 and in further view of *Rotzoll '654*.</u>

Claim 17 recites: "[t]he system of claim 15, in which the output of each of said power inverters is three-phase AC.", and claim 21 recites: "The method of claim 19, in which the output of each of said power inverters is three-phase AC." The Examiner noted during prosecution of the '133 Patent that it would have been obvious to configure an inverter system with whatever phase was appropriate for

the connected load: "Official Notice is taken that both the concept and advantages of providing for single or three phases power in power inversion systems are well known and expected in the art." Ex. 1002, 97; Ex. 1003, ¶ 138 (also citing ***Kjaer's*** FIG. 3, which shows 1 or 3 phase power). An inverter arrangement for a photovoltaic generation system where the inverter generates three-phase power is also disclosed in ***Rotzoll '654*** (Ex. 1009) and it would have been obvious to modify the inverters of any of inverter arrangements of Grounds 1–3 to output three phase power. ***Rotzoll '654*** discloses an inverter arrangement in which multiple strings of PV modules are connected to DC inputs of an inverter, the AC output of which is connected in parallel to other inverters by AC wiring. FIG. 6, below, shows a first "PV module string 601" and a "second PV module string 611" each of which has a pair of "output DC wire[s]" 605, 606 and 615, 616. ***Rotzoll '654*** at [0064]. Those DC outputs are provided as input to a power inverter (marked as 620 on FIG. 6), which includes a DC combiner. The DC combiner provides DC input to "DC inputs of an inverter 624", i.e., a DC/AC inverter. *See id.*, [0065]. "The AC outputs of the inverter 624 are connected in parallel to other inverters via AC wiring 625…" *Id.*

Rotzoll '654 also provides that its inverters can be single-phase or multiphase: "Without loss of generality, the output of the microinverters can be single-phase AC, split-phase AC or multi-phase AC." *Id.*, [0071]; *see also* [0045]

("The power inversion unit converts DC power from the associated PV module to AC power. The AC power may be generated in single-phase or multi-phase form."). Additionally, ***Rotzoll '654*** explains the advantages of inverters being capable of generating either single-phase or multi-phase power when it states, "Residential systems commonly utilize single phase AC, while commercial systems most often use three phase AC." *Id.*, [0007]. The reference further states: "A multiphase microinverter has the additional advantage of delivering substantially balanced multiphase AC power." *Id.,* [0011]. It would have been obvious to configure the single-phase inverters of ***Kondo*** or ***Fornage***, as set forth in Grounds 1–3, above, to provide three-phase power, for example, by making the inverter of those combinations a multiphase inverter, as taught in ***Rotzoll '654***. The modification would have been motivated by the advantage stated in ***Rotzoll '654***, namely being usable for a commercial installation. Ex. 1003, at ¶¶ 142–146.

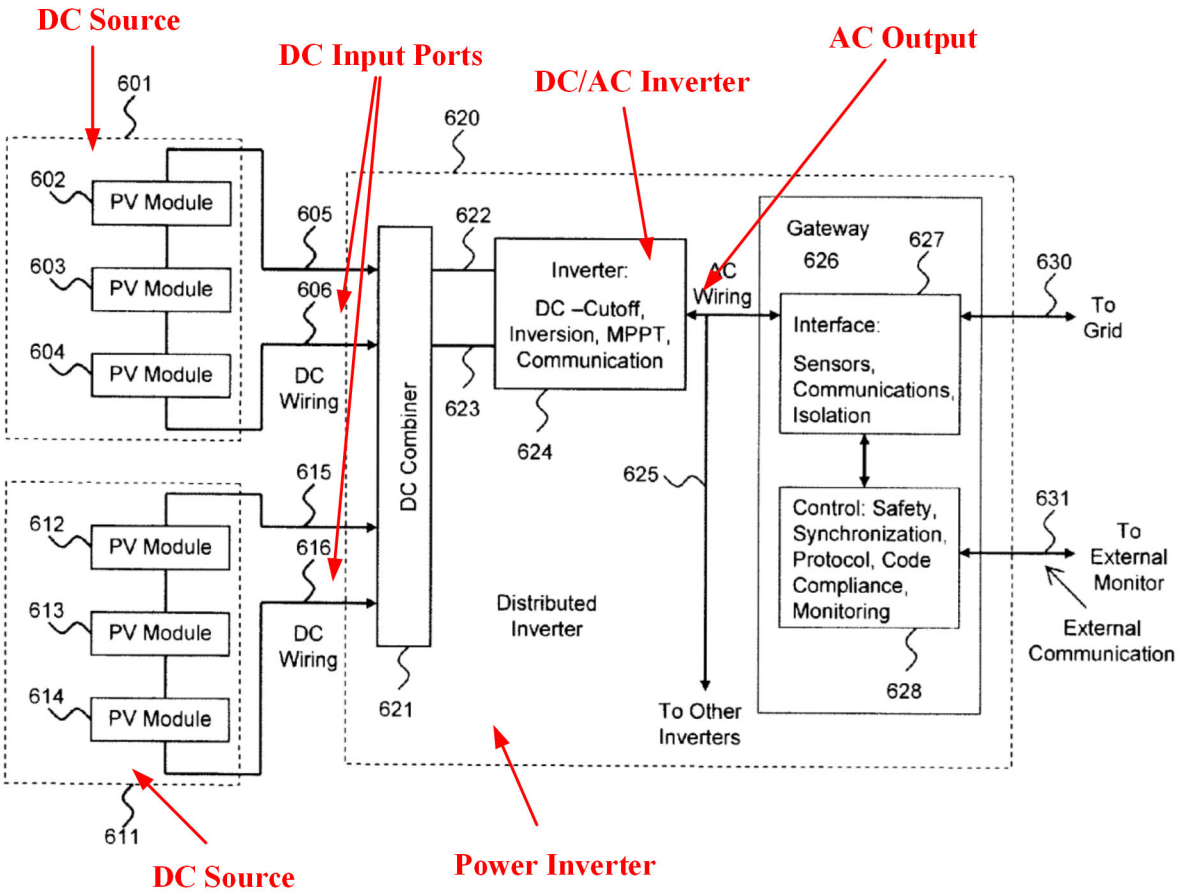

FIG. 6

IX. CONCLUSION

Petitioner requests that the Board grant this Petition and cancel claims 15–24 of the ’133 Patent.

Date: December 26, 2023

Respectfully submitted,

/Michael J. Curley/

Michael J. Curley (Reg. No. 63,251)
Michael.Curley@quarles.com
QUARLES & BRADY LLP
One South Church Avenue
Suite 1800
Tucson, Arizona 85701
Telephone: (520) 770-8768
Fax: (520) 623-2418

Attorney For Petitioner

CERTIFICATE OF WORD COUNT

I hereby certify that the foregoing Petition for *Inter Partes* Review of U.S. Patent No. 8,786,133 includes the following number of words (as calculated by Microsoft Word), excluding those in the table of contents, table of authorities, mandatory notices, certificate of service, certificate of word count, and appendix of exhibits: 13,591.

Date: December 26, 2023

Respectfully submitted,

/Michael J. Curley/

Michael J. Curley (Reg. No. 63,251)
Michael.Curley@quarles.com
QUARLES & BRADY LLP
One South Church Avenue
Suite 1800
Tucson, Arizona 85701
Telephone: (520) 770-8768
Fax: (520) 623-2418

Attorney For Petitioner

CERTIFICATE OF SERVICE

I hereby certify on December 26, 2023, that a true and correct copy of the Petition for *Inter Partes* Review of U.S. Patent No. 8,786,133 was served in its entirety via e-mail and UPS to the Patent Owner by serving the correspondence address of record for the ’133 Patent:

DLA PIPER LLP US - Reston
Attn: Patent Group
11911 Freedom Drive, Suite 300
Reston, VA 20190

Additionally, at a true and correct copy of the Petition was served in its entirety via e-mail to Patent Owner’s litigation counsel:

William P. Ramey, III
5020 Montrose Blvd., Suite 800
Houston, Texas 77006
wramey@rameyfirm.com

Date: December 26, 2023

Respectfully submitted,

/Michael J. Curley/

Michael J. Curley (Reg. No. 63,251)
Michael.Curley@quarles.com
QUARLES & BRADY LLP
One South Church Avenue
Suite 1800
Tucson, Arizona 85701
Telephone: (520) 770-8768
Fax: (520) 623-2418

Attorney For Petitioner