AO 120 (Rev. 08/10)

TO: Mail Stop 8 Director of the U.S. Patent and Trademark Office P.O. Box 1450 Alexandria, VA 22313-1450	REPORT ON THE FILING OR DETERMINATION OF AN ACTION REGARDING A PATENT OR TRADEMARK

In Compliance with 35 U.S.C. § 290 and/or 15 U.S.C. § 1116 you are hereby advised that a court action has been filed in the U.S. District Court Western District of Texas, Waco Division on the following

☐ Trademarks or ☑ Patents. (☐ the patent action involves 35 U.S.C. § 292.):

DOCKET NO.	DATE FILED	U.S. DISTRICT COURT
6:22-cv-01136	10/28/2022	Western District of Texas, Waco Division

PLAINTIFF	DEFENDANT
CYBOENERGY, INC.	ALTENERGY POWER SYSTEM USA, INC.

PATENT OR TRADEMARK NO.	DATE OF PATENT OR TRADEMARK	HOLDER OF PATENT OR TRADEMARK
1 US 8,786,133	7/22/2014	CYBOENERGY, INC.
2 US 9,331,489	5/3/2016	CYBOENERGY, INC.
3		
4		
5		

In the above—entitled case, the following patent(s)/ trademark(s) have been included:

DATE INCLUDED	INCLUDED BY ☐ Amendment ☐ Answer ☐ Cross Bill ☐ Other Pleading	
PATENT OR TRADEMARK NO.	DATE OF PATENT OR TRADEMARK	HOLDER OF PATENT OR TRADEMARK
1		
2		
3		
4		
5		

In the above—entitled case, the following decision has been rendered or judgement issued:

DECISION/JUDGEMENT

CLERK	(BY) DEPUTY CLERK	DATE

Copy 1—Upon initiation of action, mail this copy to Director **Copy 3—Upon termination of action, mail this copy to Director**
Copy 2—Upon filing document adding patent(s), mail this copy to Director **Copy 4—Case file copy**

AO 120 (Rev. 08/10)

TO:	Mail Stop 8 Director of the U.S. Patent and Trademark Office P.O. Box 1450 Alexandria, VA 22313-1450	REPORT ON THE FILING OR DETERMINATION OF AN ACTION REGARDING A PATENT OR TRADEMARK

In Compliance with 35 U.S.C. § 290 and/or 15 U.S.C. § 1116 you are hereby advised that a court action has been filed in the U.S. District Court WESTERN DISTRICT OF TEXAS, WACO DIVISION on the following

☐ Trademarks or ☑ Patents. (☐ the patent action involves 35 U.S.C. § 292.):

DOCKET NO.	DATE FILED	U.S. DISTRICT COURT
6:22-cv-00281	3/16/2022	WESTERN DISTRICT OF TEXAS, WACO DIVISION

PLAINTIFF	DEFENDANT
CYBOENERGY, INC.	APTOS SOLAR TECHNOLOGY, LLC

PATENT OR TRADEMARK NO.	DATE OF PATENT OR TRADEMARK	HOLDER OF PATENT OR TRADEMARK
1 US 8,786,133	7/22/2014	CYBOENERGY, INC.
2 US 9,331,489	5/3/2016	CYBOENERGY, INC.
3		
4		
5		

In the above—entitled case, the following patent(s)/ trademark(s) have been included:

DATE INCLUDED	INCLUDED BY ☐ Amendment ☐ Answer ☐ Cross Bill ☐ Other Pleading	
PATENT OR TRADEMARK NO.	DATE OF PATENT OR TRADEMARK	HOLDER OF PATENT OR TRADEMARK
1		
2		
3		
4		
5		

In the above—entitled case, the following decision has been rendered or judgement issued:

DECISION/JUDGEMENT
7/11/2022 - Plaintiff's Stipulation of Dismissal - Doc #6

CLERK	(BY) DEPUTY CLERK	DATE
Philip J. Devlin	Suzanne Miles	July 11, 2022

Copy 1—Upon initiation of action, mail this copy to Director **Copy 3—Upon termination of action, mail this copy to Director**
Copy 2—Upon filing document adding patent(s), mail this copy to Director **Copy 4—Case file copy**

AO 120 (Rev. 08/10)

TO:	Mail Stop 8 Director of the U.S. Patent and Trademark Office P.O. Box 1450 Alexandria, VA 22313-1450	REPORT ON THE FILING OR DETERMINATION OF AN ACTION REGARDING A PATENT OR TRADEMARK

In Compliance with 35 U.S.C. § 290 and/or 15 U.S.C. § 1116 you are hereby advised that a court action has been filed in the U.S. District Court WESTERN DISTRICT OF TEXAS, WACO DIVISION on the following

☐ Trademarks or ☑ Patents. (☐ the patent action involves 35 U.S.C. § 292.):

DOCKET NO.	DATE FILED	U.S. DISTRICT COURT
6:22-cv-00281	3/16/2022	WESTERN DISTRICT OF TEXAS, WACO DIVISION

PLAINTIFF	DEFENDANT
CYBOENERGY, INC.	APTOS SOLAR TECHNOLOGY, LLC

PATENT OR TRADEMARK NO.	DATE OF PATENT OR TRADEMARK	HOLDER OF PATENT OR TRADEMARK
1 US 8,786,133	7/22/2014	CYBOENERGY, INC.
2 US 9,331,489	5/3/2016	CYBOENERGY, INC.
3		
4		
5		

In the above—entitled case, the following patent(s)/ trademark(s) have been included:

DATE INCLUDED	INCLUDED BY ☐ Amendment ☐ Answer ☐ Cross Bill ☐ Other Pleading	
PATENT OR TRADEMARK NO.	DATE OF PATENT OR TRADEMARK	HOLDER OF PATENT OR TRADEMARK
1		
2		
3		
4		
5		

In the above—entitled case, the following decision has been rendered or judgement issued:

DECISION/JUDGEMENT

CLERK	(BY) DEPUTY CLERK	DATE

Copy 1—Upon initiation of action, mail this copy to Director **Copy 3—Upon termination of action, mail this copy to Director**
Copy 2—Upon filing document adding patent(s), mail this copy to Director **Copy 4—Case file copy**

AO 120 (Rev. 08/10)

TO:	Mail Stop 8 Director of the U.S. Patent and Trademark Office P.O. Box 1450 Alexandria, VA 22313-1450	REPORT ON THE FILING OR DETERMINATION OF AN ACTION REGARDING A PATENT OR TRADEMARK

In Compliance with 35 U.S.C. § 290 and/or 15 U.S.C. § 1116 you are hereby advised that a court action has been filed in the U.S. District Court WESTERN DISTRICT OF TEXAS, WACO DIVISION on the following

☐ Trademarks or ☑ Patents. (☐ the patent action involves 35 U.S.C. § 292.):

DOCKET NO.	DATE FILED	U.S. DISTRICT COURT
6:22-cv-00281	3/16/2022	WESTERN DISTRICT OF TEXAS, WACO DIVISION

PLAINTIFF	DEFENDANT
CYBOENERGY, INC.	APTOS SOLAR TECHNOLOGY, LLC

PATENT OR TRADEMARK NO.	DATE OF PATENT OR TRADEMARK	HOLDER OF PATENT OR TRADEMARK
1 US 8,786,133	7/22/2014	CYBOENERGY, INC.
2 US 9,331,489	5/3/2016	CYBOENERGY, INC.
3		
4		
5		

In the above—entitled case, the following patent(s)/ trademark(s) have been included:

DATE INCLUDED	INCLUDED BY ☐ Amendment ☐ Answer ☐ Cross Bill ☐ Other Pleading	
PATENT OR TRADEMARK NO.	DATE OF PATENT OR TRADEMARK	HOLDER OF PATENT OR TRADEMARK
1		
2		
3		
4		
5		

In the above—entitled case, the following decision has been rendered or judgement issued:

DECISION/JUDGEMENT

CLERK	(BY) DEPUTY CLERK	DATE

Copy 1—Upon initiation of action, mail this copy to Director **Copy 3—Upon termination of action, mail this copy to Director**
Copy 2—Upon filing document adding patent(s), mail this copy to Director **Copy 4—Case file copy**

AO 120 (Rev. 08/10)

TO:	Mail Stop 8 Director of the U.S. Patent and Trademark Office P.O. Box 1450 Alexandria, VA 22313-1450	REPORT ON THE FILING OR DETERMINATION OF AN ACTION REGARDING A PATENT OR TRADEMARK

In Compliance with 35 U.S.C. § 290 and/or 15 U.S.C. § 1116 you are hereby advised that a court action has been filed in the U.S. District Court Central District of California on the following

☐ Trademarks or ☑ Patents. (☐ the patent action involves 35 U.S.C. § 292.):

DOCKET NO.	DATE FILED	U.S. DISTRICT COURT
2:21-cv-8216	10/15/2021	Central District of California

PLAINTIFF	DEFENDANT
CYBOENERGY, INC.	SENSATA TECHNOLOGIES HOLDINGS, PLC.

PATENT OR TRADEMARK NO.	DATE OF PATENT OR TRADEMARK	HOLDER OF PATENT OR TRADEMARK
1 U.S. 8,786,133	7/22/2014	CYBOENERGY, INC
2 U.S. 9,331,489	5/3/2016	CYBOENERGY, INC
3		
4		
5		

In the above—entitled case, the following patent(s)/ trademark(s) have been included:

DATE INCLUDED	INCLUDED BY ☐ Amendment ☐ Answer ☐ Cross Bill ☐ Other Pleading	
PATENT OR TRADEMARK NO.	DATE OF PATENT OR TRADEMARK	HOLDER OF PATENT OR TRADEMARK
1		
2		
3		
4		
5		

In the above—entitled case, the following decision has been rendered or judgement issued:

DECISION/JUDGEMENT

CLERK	(BY) DEPUTY CLERK	DATE

Copy 1—Upon initiation of action, mail this copy to Director **Copy 3—Upon termination of action, mail this copy to Director**
Copy 2—Upon filing document adding patent(s), mail this copy to Director **Copy 4—Case file copy**

UNITED STATES PATENT AND TRADEMARK OFFICE

UNITED STATES DEPARTMENT OF COMMERCE
United States Patent and Trademark Office
Address: COMMISSIONER FOR PATENTS
P.O. Box 1450
Alexandria, Virginia 22313-1450
www.uspto.gov

APPLICATION NO.	ISSUE DATE	PATENT NO.	ATTORNEY DOCKET NO.	CONFIRMATION NO.
12/837,162	07/22/2014	8786133	350809-000003	3679

47604 7590 07/02/2014
DLA PIPER LLP US
P. O. BOX 2758
RESTON, VA 20195

ISSUE NOTIFICATION

The projected patent number and issue date are specified above.

Determination of Patent Term Adjustment under 35 U.S.C. 154 (b)
(application filed on or after May 29, 2000)

The Patent Term Adjustment is 693 day(s). Any patent to issue from the above-identified application will include an indication of the adjustment on the front page.

If a Continued Prosecution Application (CPA) was filed in the above-identified application, the filing date that determines Patent Term Adjustment is the filing date of the most recent CPA.

Applicant will be able to obtain more detailed information by accessing the Patent Application Information Retrieval (PAIR) WEB site (http://pair.uspto.gov).

Any questions regarding the Patent Term Extension or Adjustment determination should be directed to the Office of Patent Legal Administration at (571)-272-7702. Questions relating to issue and publication fee payments should be directed to the Application Assistance Unit (AAU) of the Office of Data Management (ODM) at (571)-272-4200.

APPLICANT(s) (Please see PAIR WEB site http://pair.uspto.gov for additional applicants):

George Shu-Xing CHENG, Folsom, CA;
Steven L. Mulkey, Cameron Park, CA;

The United States represents the largest, most dynamic marketplace in the world and is an unparalleled location for business investment, innovation, and commercialization of new technologies. The USA offers tremendous resources and advantages for those who invest and manufacture goods here. Through SelectUSA, our nation works to encourage and facilitate business investment. To learn more about why the USA is the best country in the world to develop technology, manufacture products, and grow your business, visit SelectUSA.gov.

IR103 (Rev. 10/09)

PTO/SB/08a (08-03)
Approved for use through 07/31/2006. OMB 0651-0031
U.S. Patent and Trademark Office; U.S. DEPARTMENT OF COMMERCE
Under the Paperwork Reduction Act of 1995, no persons are required to respond to a collection of information unless it contains a valid OMB control number.

Substitute for form 1449A/PTO

INFORMATION DISCLOSURE STATEMENT BY APPLICANT

(Use as many sheets as necessary)

Complete if Known

Application Number	12/837,162
Filing Date	July 15, 2010
First Named Inventor	George Shu-Xing Cheng
Art Unit	2838
Examiner Name	Unknown
Attorney Docket Number	350809-000003

U. S. PATENT DOCUMENTS

Examiner Initials*	Cite No.	Document Number Number-Kind Code	Publication Date MM-DD-YYYY	Name of Patentee or Applicant of Cited Document	Pages, Columns, Lines, Where Relevant Passages or Relevant Figures Appear
		US -2003/7369	1/9/2003	Gilbreth	
		US -2009-160258	6/25/2009	~~James~~ Allen	
		US -2009-159113	6/25/2009	~~Keiji~~ Morimoto	
		US -2008-111517	5/15/2008	Pfeifer	
		US -2004-264225	12/30/2004	Bhavaraju	
		US -2001-52704	12/20/2001	Bosley	
		US -2001/52704	12/20/2001	Bosley	
		US -2002/73713	6/20/2002	Mackay	
		US -2002/99476	7/25/2002	Hamrin	
		US -2002/166324	11/14/2002	Willis	
		US -2004/103669	6/3/2004	Willis	
		US -2004/119291	6/24/2004	Hamrin	
		US -2004/135436	7/15/2004	Gilbreth	
		US -5,903,116	5/11/1999	GEIS	
		US -6,031,294	2/29/2000	GEIS	
		US -6,192,668	2/27/2001	MACKAY	
		US -6,265,786	7/24/2001	BOSLEY	
		US -6,325,142	12/4/2001	BOSLEY	
		US -6,381,944	5/7/2002	Mackay	
		US -6,487,096	11/26/2002	GILBRETH	
		US -6,495,929	12/17/2002	Bosley	
		US -6,612,112	9/2/2003	Gilbreth	
		US -6,784,565	8/31/2004	Wall	
		US -6,870,279	3/22/2005	Gilbreth	
		US -6,958,550	10/25/2005	Gilbreth	
		US -6,960,840	11/1/2005	Willis	
		US -2008/111517	5/15/2008	Pfeifer	

Change(s) applied to document, /C.L./ 5/15/2014

FOREIGN PATENT DOCUMENTS

Examiner Initials*	Cite No.[1]	Foreign Patent Document Country Code[3] Number[4] Kind Code[5] (if known)	Publication Date MM-DD-YYYY	Name of Patentee or Applicant of Cited Document	Pages, Columns, Lines, Where Relevant Passages or Relevant Figures Appear	T[8]

 ALL REFERENCES CONSIDERED EXCEPT WHERE LINED THROUGH. /D.C./

PART B - FEE(S) TRANSMITTAL

Complete and send this form, together with applicable fee(s), to: Mail **Mail Stop ISSUE FEE**
Commissioner for Patents
P.O. Box 1450
Alexandria, Virginia 22313-1450
or Fax (571)-273-2885

INSTRUCTIONS: This form should be used for transmitting the ISSUE FEE and PUBLICATION FEE (if required). Blocks 1 through 5 should be completed where appropriate. All further correspondence including the Patent, advance orders and notification of maintenance fees will be mailed to the current correspondence address as indicated unless corrected below or directed otherwise in Block 1, by (a) specifying a new correspondence address; and/or (b) indicating a separate "FEE ADDRESS" for maintenance fee notifications.

CURRENT CORRESPONDENCE ADDRESS (Note: Use Block 1 for any change of address)

47604 7590 04/04/2014
DLA PIPER LLP US
P. O. BOX 2758
RESTON, VA 20195

Note: A certificate of mailing can only be used for domestic mailings of the Fee(s) Transmittal. This certificate cannot be used for any other accompanying papers. Each additional paper, such as an assignment or formal drawing, must have its own certificate of mailing or transmission.

Certificate of Mailing or Transmission

I hereby certify that this Fee(s) Transmittal is being deposited with the United States Postal Service with sufficient postage for first class mail in an envelope addressed to the Mail Stop ISSUE FEE address above, or being facsimile transmitted to the USPTO (571) 273-2885, on the date indicated below.

(Depositor's name)
(Signature)
(Date)

APPLICATION NO.	FILING DATE	FIRST NAMED INVENTOR	ATTORNEY DOCKET NO.	CONFIRMATION NO.
12/837,162	07/15/2010	George Shu-Xing CHENG	350809-000003	3679

TITLE OF INVENTION: SMART AND SCALABLE POWER INVERTERS

APPLN. TYPE	ENTITY STATUS	ISSUE FEE DUE	PUBLICATION FEE DUE	PREV. PAID ISSUE FEE	TOTAL FEE(S) DUE	DATE DUE
nonprovisional	SMALL	$480	$0	$0	$480	07/07/2014

EXAMINER	ART UNIT	CLASS-SUBCLASS
CAVALLARI, DANIEL J	2836	307-082000

1. Change of correspondence address or indication of "Fee Address" (37 CFR 1.363).
- ☐ Change of correspondence address (or Change of Correspondence Address form PTO/SB/122) attached.
- ☐ "Fee Address" indication (or "Fee Address" Indication form PTO/SB/47; Rev 03-02 or more recent) attached. **Use of a Customer Number is required.**

2. For printing on the patent front page, list
(1) The names of up to 3 registered patent attorneys or agents OR, alternatively,
(2) The name of a single firm (having as a member a registered attorney or agent) and the names of up to 2 registered patent attorneys or agents. If no name is listed, no name will be printed.

1 DLA Piper LLP (US)
2
3

3. ASSIGNEE NAME AND RESIDENCE DATA TO BE PRINTED ON THE PATENT (print or type)

PLEASE NOTE: Unless an assignee is identified below, no assignee data will appear on the patent. If an assignee is identified below, the document has been filed for recordation as set forth in 37 CFR 3.11. Completion of this form is NOT a substitute for filing an assignment.

(A) NAME OF ASSIGNEE: CyboEnergy, Inc.
(B) RESIDENCE: (CITY and STATE OR COUNTRY): Rancho Cordova, CA

Please check the appropriate assignee category or categories (will not be printed on the patent) : ☐ Individual ☒ Corporation or other private group entity ☐ Government

4a. The following fee(s) are submitted:
- ☒ Issue Fee
- ☐ Publication Fee (No small entity discount permitted)
- ☐ Advance Order - # of Copies _____

4b. Payment of Fee(s): (**Please first reapply any previously paid issue fee shown above**)
- ☐ A check is enclosed.
- ☒ Payment by credit card. Form PTO-2038 is attached.
- ☒ The Director is hereby authorized to charge the required fee(s), any deficiency, or credits any overpayment, to Deposit Account Number 50-3266 (enclose an extra copy of this form).

5. **Change in Entity Status** (from status indicated above) (if necessary)
- ☐ Applicant certifying micro entity status. See 37 CFR 1.29 — NOTE: Absent a valid certification of Micro Entity Status (see forms PTO/SB/15A and 15B), issue fee payment in the micro entity amount will not be accepted at the risk of application abandonment.
- ☐ Applicant asserting small entity status. See 37 CFR 1.27 — NOTE: If the application was previously under micro entity status, checking this box will be taken to be a notification of loss of entitlement to micro entity status.
- ☐ Applicant changing to regular undiscounted fee status. — NOTE: Checking this box will be taken to be a notification of loss of entitlement to small or micro entity status, as applicable.

NOTE: This form must be signed in accordance with 37 CFR 1.31 and 1.33. See 37 CFR 1.4 for signature requirements and certifications.

Authorized Signature /Dale S. Lazar/ Date June 9, 2014

Typed or printed name Dale S. Lazar Registration No. 28,872

PTOL-85 Part B (10-13) Approved for use through 10/31/2013. OMB 0651-0033 U.S. Patent and Trademark Office; U.S. DEPARTMENT OF COMMERCE

Electronic Patent Application Fee Transmittal

Application Number:	12837162
Filing Date:	15-Jul-2010
Title of Invention:	SMART AND SCALABLE POWER INVERTERS
First Named Inventor/Applicant Name:	George Shu-Xing CHENG
Filer:	Dale S. Lazar/Ava M. Dixon
Attorney Docket Number:	350809-000003

Filed as Small Entity

Utility under 35 USC 111(a) Filing Fees

Description	Fee Code	Quantity	Amount	Sub-Total in USD($)
Basic Filing:				
Pages:				
Claims:				
Miscellaneous-Filing:				
Petition:				
Patent-Appeals-and-Interference:				
Post-Allowance-and-Post-Issuance:				
Utility Appl Issue Fee	2501	1	480	480
Extension-of-Time:				

Description	Fee Code	Quantity	Amount	Sub-Total in USD($)
Miscellaneous:				
		Total in USD ($)		**480**

Electronic Acknowledgement Receipt	
EFS ID:	19244409
Application Number:	12837162
International Application Number:	
Confirmation Number:	3679
Title of Invention:	SMART AND SCALABLE POWER INVERTERS
First Named Inventor/Applicant Name:	George Shu-Xing CHENG
Customer Number:	47604
Filer:	Dale S. Lazar/Margaret Filipowicz
Filer Authorized By:	Dale S. Lazar
Attorney Docket Number:	350809-000003
Receipt Date:	09-JUN-2014
Filing Date:	15-JUL-2010
Time Stamp:	16:47:40
Application Type:	Utility under 35 USC 111(a)

Payment information:

Submitted with Payment	yes
Payment Type	Credit Card
Payment was successfully received in RAM	$480
RAM confirmation Number	3592
Deposit Account	
Authorized User	

File Listing:

Document Number	Document Description	File Name	File Size(Bytes)/ Message Digest	Multi Part /.zip	Pages (if appl.)

1	Issue Fee Payment (PTO-85B)	350809-000003_IssueFee.pdf	1549233 6d71f0fc0a96d71eb91b23c6ff7f40766ca1448f	no	1
Warnings:					
Information:					
2	Fee Worksheet (SB06)	fee-info.pdf	30794 666b26c436131a94d0128a1ab735e2d8c817efc6	no	2
Warnings:					
Information:					
		Total Files Size (in bytes):	1580027		

This Acknowledgement Receipt evidences receipt on the noted date by the USPTO of the indicated documents, characterized by the applicant, and including page counts, where applicable. It serves as evidence of receipt similar to a Post Card, as described in MPEP 503.

<u>New Applications Under 35 U.S.C. 111</u>
If a new application is being filed and the application includes the necessary components for a filing date (see 37 CFR 1.53(b)-(d) and MPEP 506), a Filing Receipt (37 CFR 1.54) will be issued in due course and the date shown on this Acknowledgement Receipt will establish the filing date of the application.

<u>National Stage of an International Application under 35 U.S.C. 371</u>
If a timely submission to enter the national stage of an international application is compliant with the conditions of 35 U.S.C. 371 and other applicable requirements a Form PCT/DO/EO/903 indicating acceptance of the application as a national stage submission under 35 U.S.C. 371 will be issued in addition to the Filing Receipt, in due course.

<u>New International Application Filed with the USPTO as a Receiving Office</u>
If a new international application is being filed and the international application includes the necessary components for an international filing date (see PCT Article 11 and MPEP 1810), a Notification of the International Application Number and of the International Filing Date (Form PCT/RO/105) will be issued in due course, subject to prescriptions concerning national security, and the date shown on this Acknowledgement Receipt will establish the international filing date of the application.

UNITED STATES PATENT AND TRADEMARK OFFICE

UNITED STATES DEPARTMENT OF COMMERCE
United States Patent and Trademark Office
Address: COMMISSIONER FOR PATENTS
P.O. Box 1450
Alexandria, Virginia 22313-1450
www.uspto.gov

NOTICE OF ALLOWANCE AND FEE(S) DUE

47604 7590 04/04/2014
DLA PIPER LLP US
P. O. BOX 2758
RESTON, VA 20195

EXAMINER
CAVALLARI, DANIEL J

ART UNIT	PAPER NUMBER
2836	

DATE MAILED: 04/04/2014

APPLICATION NO.	FILING DATE	FIRST NAMED INVENTOR	ATTORNEY DOCKET NO.	CONFIRMATION NO.
12/837,162	07/15/2010	George Shu-Xing CHENG	350809-000003	3679

TITLE OF INVENTION: SMART AND SCALABLE POWER INVERTERS

APPLN. TYPE	ENTITY STATUS	ISSUE FEE DUE	PUBLICATION FEE DUE	PREV. PAID ISSUE FEE	TOTAL FEE(S) DUE	DATE DUE
nonprovisional	SMALL	$480	$0	$0	$480	07/07/2014

THE APPLICATION IDENTIFIED ABOVE HAS BEEN EXAMINED AND IS ALLOWED FOR ISSUANCE AS A PATENT. PROSECUTION ON THE MERITS IS CLOSED. THIS NOTICE OF ALLOWANCE IS NOT A GRANT OF PATENT RIGHTS. THIS APPLICATION IS SUBJECT TO WITHDRAWAL FROM ISSUE AT THE INITIATIVE OF THE OFFICE OR UPON PETITION BY THE APPLICANT. SEE 37 CFR 1.313 AND MPEP 1308.

THE ISSUE FEE AND PUBLICATION FEE (IF REQUIRED) MUST BE PAID WITHIN THREE MONTHS FROM THE MAILING DATE OF THIS NOTICE OR THIS APPLICATION SHALL BE REGARDED AS ABANDONED. THIS STATUTORY PERIOD CANNOT BE EXTENDED. SEE 35 U.S.C. 151. THE ISSUE FEE DUE INDICATED ABOVE DOES NOT REFLECT A CREDIT FOR ANY PREVIOUSLY PAID ISSUE FEE IN THIS APPLICATION. IF AN ISSUE FEE HAS PREVIOUSLY BEEN PAID IN THIS APPLICATION (AS SHOWN ABOVE), THE RETURN OF PART B OF THIS FORM WILL BE CONSIDERED A REQUEST TO REAPPLY THE PREVIOUSLY PAID ISSUE FEE TOWARD THE ISSUE FEE NOW DUE.

HOW TO REPLY TO THIS NOTICE:

I. Review the ENTITY STATUS shown above. If the ENTITY STATUS is shown as SMALL or MICRO, verify whether entitlement to that entity status still applies.

If the ENTITY STATUS is the same as shown above, pay the TOTAL FEE(S) DUE shown above.

If the ENTITY STATUS is changed from that shown above, on PART B - FEE(S) TRANSMITTAL, complete section number 5 titled "Change in Entity Status (from status indicated above)".

For purposes of this notice, small entity fees are 1/2 the amount of undiscounted fees, and micro entity fees are 1/2 the amount of small entity fees.

II. PART B - FEE(S) TRANSMITTAL, or its equivalent, must be completed and returned to the United States Patent and Trademark Office (USPTO) with your ISSUE FEE and PUBLICATION FEE (if required). If you are charging the fee(s) to your deposit account, section "4b" of Part B - Fee(s) Transmittal should be completed and an extra copy of the form should be submitted. If an equivalent of Part B is filed, a request to reapply a previously paid issue fee must be clearly made, and delays in processing may occur due to the difficulty in recognizing the paper as an equivalent of Part B.

III. All communications regarding this application must give the application number. Please direct all communications prior to issuance to Mail Stop ISSUE FEE unless advised to the contrary.

IMPORTANT REMINDER: Utility patents issuing on applications filed on or after Dec. 12, 1980 may require payment of maintenance fees. It is patentee's responsibility to ensure timely payment of maintenance fees when due.

PTOL-85 (Rev. 02/11)

PART B - FEE(S) TRANSMITTAL

Complete and send this form, together with applicable fee(s), to: Mail **Mail Stop ISSUE FEE**
Commissioner for Patents
P.O. Box 1450
Alexandria, Virginia 22313-1450
or Fax (571)-273-2885

INSTRUCTIONS: This form should be used for transmitting the ISSUE FEE and PUBLICATION FEE (if required). Blocks 1 through 5 should be completed where appropriate. All further correspondence including the Patent, advance orders and notification of maintenance fees will be mailed to the current correspondence address as indicated unless corrected below or directed otherwise in Block 1, by (a) specifying a new correspondence address; and/or (b) indicating a separate "FEE ADDRESS" for maintenance fee notifications.

CURRENT CORRESPONDENCE ADDRESS (Note: Use Block 1 for any change of address)

47604 7590 04/04/2014
DLA PIPER LLP US
P. O. BOX 2758
RESTON, VA 20195

Note: A certificate of mailing can only be used for domestic mailings of the Fee(s) Transmittal. This certificate cannot be used for any other accompanying papers. Each additional paper, such as an assignment or formal drawing, must have its own certificate of mailing or transmission.

Certificate of Mailing or Transmission

I hereby certify that this Fee(s) Transmittal is being deposited with the United States Postal Service with sufficient postage for first class mail in an envelope addressed to the Mail Stop ISSUE FEE address above, or being facsimile transmitted to the USPTO (571) 273-2885, on the date indicated below.

(Depositor's name)
(Signature)
(Date)

APPLICATION NO.	FILING DATE	FIRST NAMED INVENTOR	ATTORNEY DOCKET NO.	CONFIRMATION NO.
12/837,162	07/15/2010	George Shu-Xing CHENG	350809-000003	3679

TITLE OF INVENTION: SMART AND SCALABLE POWER INVERTERS

APPLN. TYPE	ENTITY STATUS	ISSUE FEE DUE	PUBLICATION FEE DUE	PREV. PAID ISSUE FEE	TOTAL FEE(S) DUE	DATE DUE
nonprovisional	SMALL	$480	$0	$0	$480	07/07/2014

EXAMINER	ART UNIT	CLASS-SUBCLASS
CAVALLARI, DANIEL J	2836	307-082000

1. Change of correspondence address or indication of "Fee Address" (37 CFR 1.363).
- ❑ Change of correspondence address (or Change of Correspondence Address form PTO/SB/122) attached.
- ❑ "Fee Address" indication (or "Fee Address" Indication form PTO/SB/47; Rev 03-02 or more recent) attached. **Use of a Customer Number is required.**

2. For printing on the patent front page, list
(1) The names of up to 3 registered patent attorneys or agents OR, alternatively,
(2) The name of a single firm (having as a member a registered attorney or agent) and the names of up to 2 registered patent attorneys or agents. If no name is listed, no name will be printed.

1_____
2_____
3_____

3. ASSIGNEE NAME AND RESIDENCE DATA TO BE PRINTED ON THE PATENT (print or type)

PLEASE NOTE: Unless an assignee is identified below, no assignee data will appear on the patent. If an assignee is identified below, the document has been filed for recordation as set forth in 37 CFR 3.11. Completion of this form is NOT a substitute for filing an assignment.

(A) NAME OF ASSIGNEE (B) RESIDENCE: (CITY and STATE OR COUNTRY)

Please check the appropriate assignee category or categories (will not be printed on the patent) : ❑ Individual ❑ Corporation or other private group entity ❑ Government

4a. The following fee(s) are submitted:
- ❑ Issue Fee
- ❑ Publication Fee (No small entity discount permitted)
- ❑ Advance Order - # of Copies _____

4b. Payment of Fee(s): (**Please first reapply any previously paid issue fee shown above**)
- ❑ A check is enclosed.
- ❑ Payment by credit card. Form PTO-2038 is attached.
- ❑ The Director is hereby authorized to charge the required fee(s), any deficiency, or credits any overpayment, to Deposit Account Number _____ (enclose an extra copy of this form).

5. **Change in Entity Status** (from status indicated above)
- ❑ Applicant certifying micro entity status. See 37 CFR 1.29 — NOTE: Absent a valid certification of Micro Entity Status (see forms PTO/SB/15A and 15B), issue fee payment in the micro entity amount will not be accepted at the risk of application abandonment.
- ❑ Applicant asserting small entity status. See 37 CFR 1.27 — NOTE: If the application was previously under micro entity status, checking this box will be taken to be a notification of loss of entitlement to micro entity status.
- ❑ Applicant changing to regular undiscounted fee status. — NOTE: Checking this box will be taken to be a notification of loss of entitlement to small or micro entity status, as applicable.

NOTE: This form must be signed in accordance with 37 CFR 1.31 and 1.33. See 37 CFR 1.4 for signature requirements and certifications.

Authorized Signature _____ Date _____

Typed or printed name _____ Registration No. _____

PTOL-85 Part B (10-13) Approved for use through 10/31/2013. OMB 0651-0033 U.S. Patent and Trademark Office; U.S. DEPARTMENT OF COMMERCE

UNITED STATES PATENT AND TRADEMARK OFFICE

UNITED STATES DEPARTMENT OF COMMERCE
United States Patent and Trademark Office
Address: COMMISSIONER FOR PATENTS
P.O. Box 1450
Alexandria, Virginia 22313-1450
www.uspto.gov

APPLICATION NO.	FILING DATE	FIRST NAMED INVENTOR	ATTORNEY DOCKET NO.	CONFIRMATION NO.
12/837,162	07/15/2010	George Shu-Xing CHENG	350809-000003	3679

47604 7590 04/04/2014
DLA PIPER LLP US
P. O. BOX 2758
RESTON, VA 20195

EXAMINER
CAVALLARI, DANIEL J

ART UNIT	PAPER NUMBER
2836	

DATE MAILED: 04/04/2014

Determination of Patent Term Adjustment under 35 U.S.C. 154 (b)
(application filed on or after May 29, 2000)

The Patent Term Adjustment to date is 483 day(s). If the issue fee is paid on the date that is three months after the mailing date of this notice and the patent issues on the Tuesday before the date that is 28 weeks (six and a half months) after the mailing date of this notice, the Patent Term Adjustment will be 483 day(s).

If a Continued Prosecution Application (CPA) was filed in the above-identified application, the filing date that determines Patent Term Adjustment is the filing date of the most recent CPA.

Applicant will be able to obtain more detailed information by accessing the Patent Application Information Retrieval (PAIR) WEB site (http://pair.uspto.gov).

Any questions regarding the Patent Term Extension or Adjustment determination should be directed to the Office of Patent Legal Administration at (571)-272-7702. Questions relating to issue and publication fee payments should be directed to the Customer Service Center of the Office of Patent Publication at 1-(888)-786-0101 or (571)-272-4200.

PTOL-85 (Rev. 02/11)

OMB Clearance and PRA Burden Statement for PTOL-85 Part B

The Paperwork Reduction Act (PRA) of 1995 requires Federal agencies to obtain Office of Management and Budget approval before requesting most types of information from the public. When OMB approves an agency request to collect information from the public, OMB (i) provides a valid OMB Control Number and expiration date for the agency to display on the instrument that will be used to collect the information and (ii) requires the agency to inform the public about the OMB Control Number's legal significance in accordance with 5 CFR 1320.5(b).

The information collected by PTOL-85 Part B is required by 37 CFR 1.311. The information is required to obtain or retain a benefit by the public which is to file (and by the USPTO to process) an application. Confidentiality is governed by 35 U.S.C. 122 and 37 CFR 1.14. This collection is estimated to take 12 minutes to complete, including gathering, preparing, and submitting the completed application form to the USPTO. Time will vary depending upon the individual case. Any comments on the amount of time you require to complete this form and/or suggestions for reducing this burden, should be sent to the Chief Information Officer, U.S. Patent and Trademark Office, U.S. Department of Commerce, P.O. Box 1450, Alexandria, Virginia 22313-1450. DO NOT SEND FEES OR COMPLETED FORMS TO THIS ADDRESS. SEND TO: Commissioner for Patents, P.O. Box 1450, Alexandria, Virginia 22313-1450. Under the Paperwork Reduction Act of 1995, no persons are required to respond to a collection of information unless it displays a valid OMB control number.

Privacy Act Statement

The Privacy Act of 1974 (P.L. 93-579) requires that you be given certain information in connection with your submission of the attached form related to a patent application or patent. Accordingly, pursuant to the requirements of the Act, please be advised that: (1) the general authority for the collection of this information is 35 U.S.C. 2(b)(2); (2) furnishing of the information solicited is voluntary; and (3) the principal purpose for which the information is used by the U.S. Patent and Trademark Office is to process and/or examine your submission related to a patent application or patent. If you do not furnish the requested information, the U.S. Patent and Trademark Office may not be able to process and/or examine your submission, which may result in termination of proceedings or abandonment of the application or expiration of the patent.

The information provided by you in this form will be subject to the following routine uses:

1. The information on this form will be treated confidentially to the extent allowed under the Freedom of Information Act (5 U.S.C. 552) and the Privacy Act (5 U.S.C 552a). Records from this system of records may be disclosed to the Department of Justice to determine whether disclosure of these records is required by the Freedom of Information Act.
2. A record from this system of records may be disclosed, as a routine use, in the course of presenting evidence to a court, magistrate, or administrative tribunal, including disclosures to opposing counsel in the course of settlement negotiations.
3. A record in this system of records may be disclosed, as a routine use, to a Member of Congress submitting a request involving an individual, to whom the record pertains, when the individual has requested assistance from the Member with respect to the subject matter of the record.
4. A record in this system of records may be disclosed, as a routine use, to a contractor of the Agency having need for the information in order to perform a contract. Recipients of information shall be required to comply with the requirements of the Privacy Act of 1974, as amended, pursuant to 5 U.S.C. 552a(m).
5. A record related to an International Application filed under the Patent Cooperation Treaty in this system of records may be disclosed, as a routine use, to the International Bureau of the World Intellectual Property Organization, pursuant to the Patent Cooperation Treaty.
6. A record in this system of records may be disclosed, as a routine use, to another federal agency for purposes of National Security review (35 U.S.C. 181) and for review pursuant to the Atomic Energy Act (42 U.S.C. 218(c)).
7. A record from this system of records may be disclosed, as a routine use, to the Administrator, General Services, or his/her designee, during an inspection of records conducted by GSA as part of that agency's responsibility to recommend improvements in records management practices and programs, under authority of 44 U.S.C. 2904 and 2906. Such disclosure shall be made in accordance with the GSA regulations governing inspection of records for this purpose, and any other relevant (i.e., GSA or Commerce) directive. Such disclosure shall not be used to make determinations about individuals.
8. A record from this system of records may be disclosed, as a routine use, to the public after either publication of the application pursuant to 35 U.S.C. 122(b) or issuance of a patent pursuant to 35 U.S.C. 151. Further, a record may be disclosed, subject to the limitations of 37 CFR 1.14, as a routine use, to the public if the record was filed in an application which became abandoned or in which the proceedings were terminated and which application is referenced by either a published application, an application open to public inspection or an issued patent.
9. A record from this system of records may be disclosed, as a routine use, to a Federal, State, or local law enforcement agency, if the USPTO becomes aware of a violation or potential violation of law or regulation.

Notice of Allowability	Application No. 12/837,162	Applicant(s) CHENG ET AL.	
	Examiner DANIEL CAVALLARI	Art Unit 2836	AIA (First Inventor to File) Status No

-- The MAILING DATE of this communication appears on the cover sheet with the correspondence address--

All claims being allowable, PROSECUTION ON THE MERITS IS (OR REMAINS) CLOSED in this application. If not included herewith (or previously mailed), a Notice of Allowance (PTOL-85) or other appropriate communication will be mailed in due course. **THIS NOTICE OF ALLOWABILITY IS NOT A GRANT OF PATENT RIGHTS.** This application is subject to withdrawal from issue at the initiative of the Office or upon petition by the applicant. See 37 CFR 1.313 and MPEP 1308.

1. ☒ This communication is responsive to *2/11/2014*.
   ☐ A declaration(s)/affidavit(s) under **37 CFR 1.130(b)** was/were filed on_____.
2. ☐ An election was made by the applicant in response to a restriction requirement set forth during the interview on _____; the restriction requirement and election have been incorporated into this action.
3. ☒ The allowed claim(s) is/are *1-12 and 21-32*. As a result of the allowed claim(s), you may be eligible to benefit from the **Patent Prosecution Highway** program at a participating intellectual property office for the corresponding application. For more information, please see http://www.uspto.gov/patents/init_events/pph/index.jsp or send an inquiry to PPHfeedback@uspto.gov .
4. ☐ Acknowledgment is made of a claim for foreign priority under 35 U.S.C. § 119(a)-(d) or (f).
   Certified copies:
   a) ☐ All b) ☐ Some *c) ☐ None of the:
   1. ☐ Certified copies of the priority documents have been received.
   2. ☐ Certified copies of the priority documents have been received in Application No. _____ .
   3. ☐ Copies of the certified copies of the priority documents have been received in this national stage application from the International Bureau (PCT Rule 17.2(a)).

   * Certified copies not received: _____.

Applicant has THREE MONTHS FROM THE "MAILING DATE" of this communication to file a reply complying with the requirements noted below. Failure to timely comply will result in ABANDONMENT of this application.
THIS THREE-MONTH PERIOD IS NOT EXTENDABLE.

5. ☐ CORRECTED DRAWINGS (as "replacement sheets") must be submitted.
   ☐ including changes required by the attached Examiner's Amendment / Comment or in the Office action of Paper No./Mail Date _____.

   Identifying indicia such as the application number (see 37 CFR 1.84(c)) should be written on the drawings in the front (not the back) of each sheet. Replacement sheet(s) should be labeled as such in the header according to 37 CFR 1.121(d).
6. ☐ DEPOSIT OF and/or INFORMATION about the deposit of BIOLOGICAL MATERIAL must be submitted. Note the attached Examiner's comment regarding REQUIREMENT FOR THE DEPOSIT OF BIOLOGICAL MATERIAL.

Attachment(s)

1. ☒ Notice of References Cited (PTO-892)
2. ☒ Information Disclosure Statements (PTO/SB/08), Paper No./Mail Date _____
3. ☐ Examiner's Comment Regarding Requirement for Deposit of Biological Material
4. ☐ Interview Summary (PTO-413), Paper No./Mail Date _____ .
5. ☒ Examiner's Amendment/Comment
6. ☒ Examiner's Statement of Reasons for Allowance
7. ☐ Other _____.

/DANIEL CAVALLARI/
Primary Examiner, Art Unit 2836

The present application is being examined under the pre-AIA first to invent provisions.

DETAILED ACTION

Continued Examination Under 37 CFR 1.114

A request for continued examination under 37 CFR 1.114, including the fee set forth in 37 CFR 1.17(e), was filed in this application after final rejection. Since this application is eligible for continued examination under 37 CFR 1.114, and the fee set forth in 37 CFR 1.17(e) has been timely paid, the finality of the previous Office action has been withdrawn pursuant to 37 CFR 1.114. Applicant's submission filed on 2/11/2014 has been entered.

Election/Restrictions

This application is in condition for allowance except for the presence of claims 13-20 directed to claims non-elected without traverse. Accordingly, **claims 13-20 have been <u>CANCELLED</u>.**

Allowable Subject Matter

Claims 1-12 and 21-32 are allowed.

The following is an examiner's statement of reasons for allowance:

Claims 1-12, 24, and 25 are allowed as indicated in the Previous Office Action of 11/27/2013.

Claims 26-32 in the application are deemed to be directed to an nonobvious improvement over the prior art of record, particularly Erickson, JR. et al. US 2012/0025618; Stren US 2010/0237703; Dennis et al. US 2011/0273022; Rotzoll et al. US 2008/0283118; and Bower et al. US 2003/0111103 teach systems for providing AC power to a grid from a plurality of sources/converters.

The primary reason for allowance of the claims is the inclusion of the particular port configuration further comprising both an AC input port coupled to the single DC-AC inverter and the AC output port coupled to the single DC-AC inverter.

Any comments considered necessary by applicant must be submitted no later than the payment of the issue fee and, to avoid processing delays, should preferably accompany the issue fee. Such submissions should be clearly labeled "Comments on Statement of Reasons for Allowance."

Conclusion

Any inquiry concerning this communication or earlier communications from the examiner should be directed to Daniel Cavallari whose telephone number is 571-272-8541. The examiner can normally be reached on Monday-Friday 10:00am-6:30pm.

If attempts to reach the examiner by telephone are unsuccessful, the examiner's supervisor, Jared Fureman can be reached at (571)272-2391. The fax phone number for the organization where this application or proceeding is assigned is 571-273-8300.

Information regarding the status of an application may be obtained from the Patent Application Information Retrieval (PAIR) system. Status information for published applications may be obtained from either Private PAIR or Public PAIR. Status information for unpublished applications is available through Private PAIR only. For more information about the PAIR system, see http://pair-direct.uspto.gov. Should you have questions on access to the Private PAIR system, contact the Electronic Business Center (EBC) at 866-217-9197 (toll-free). If you would like assistance from a USPTO Customer Service Representative or access to the automated information system, call 800-786-9199 (IN USA OR CANADA) or 571-272-1000.

/Daniel Cavallari/

PRIMARY PATENT EXAMINER
ART UNIT 2836

Notice of References Cited	Application/Control No. 12/837,162	Applicant(s)/Patent Under Reexamination CHENG ET AL.	
	Examiner DANIEL CAVALLARI	Art Unit 2836	Page 1 of 1

U.S. PATENT DOCUMENTS

*		Document Number Country Code-Number-Kind Code	Date MM-YYYY	Name	Classification
*	A	US-2008/0283118	11-2008	Rotzoll et al.	136/251
*	B	US-2011/0273022	11-2011	Dennis et al.	307/72
*	C	US-2010/0237703	09-2010	Stern, Michael Joseph	307/77
*	D	US-2012/0025618	02-2012	Erickson et al.	307/77
*	E	US-2003/0111103	06-2003	Bower et al.	136/244
	F	US-			
	G	US-			
	H	US-			
	I	US-			
	J	US-			
	K	US-			
	L	US-			
	M	US-			

FOREIGN PATENT DOCUMENTS

*		Document Number Country Code-Number-Kind Code	Date MM-YYYY	Country	Name	Classification
	N					
	O					
	P					
	Q					
	R					
	S					
	T					

NON-PATENT DOCUMENTS

*		Include as applicable: Author, Title Date, Publisher, Edition or Volume, Pertinent Pages)
	U	
	V	
	W	
	X	

*A copy of this reference is not being furnished with this Office action. (See MPEP § 707.05(a).)
Dates in MM-YYYY format are publication dates. Classifications may be US or foreign.

Receipt date: 04/17/2013

12837162 - GAU: 2836

PTO/SB/08a (08-03)
Approved for use through 07/31/2006. OMB 0651-0031
U.S. Patent and Trademark Office; U.S. DEPARTMENT OF COMMERCE
Under the Paperwork Reduction Act of 1995, no persons are required to respond to a collection of information unless it contains a valid OMB control number.

Substitute for form 1449A/PTO

INFORMATION DISCLOSURE STATEMENT BY APPLICANT

(Use as many sheets as necessary)

Complete if Known	
Application Number	12/837,162
Filing Date	July 15, 2010
First Named Inventor	George Shu-Xing Cheng
Art Unit	2836
Examiner Name	Daniel J. Cavallari
Attorney Docket Number	350809-000003

U. S. PATENT DOCUMENTS

Examiner Initials*	Cite No.	Document Number Number-Kind Code	Publication Date MM-DD-YYYY	Name of Patentee or Applicant of Cited Document	Pages, Columns, Lines, Where Relevant Passages or Relevant Figures Appear
		US -2011/0012430	1/20/11	Cheng	
		US -2010/0202177	8/12/10	Kajouke	
		US -2009/0000654	1/1/2009	Rotzoll	
		US -			
		US -			
		US -			
		US -			
		US -			

FOREIGN PATENT DOCUMENTS

Examiner Initials*	Cite No.[1]	Foreign Patent Document Country Code[3] Number[4] Kind Code[5] (if known)	Publication Date MM-DD-YYYY	Name of Patentee or Applicant of Cited Document	Pages, Columns, Lines, Where Relevant Passages or Relevant Figures Appear	T[6]

NON PATENT LITERATURE DOCUMENTS

Examiner Initials*	Cite No.[1]	Include name of the author (in CAPITAL LETTERS), title of the article (when appropriate), title of the item (book, magazine, journal, serial, symposium, catalog, etc.), date, page(s), volume-issue number(s), publisher, city and/or country where published.	T[2]
		International Search Report and Written Opinion issued in PCT/US2012/041923 on January 17, 2013	
		Image file Wrapper of related U.S. Application 13/397,407 electronically captured on April 17, 2013	

Examiner Signature	/Daniel Cavallari/	Date Considered	03/31/2014

*EXAMINER: Initial if reference considered, whether or not citation is in conformance with MPEP 609. Draw line through citation if not in conformance and not considered. Include copy of this form with next communication to applicant.

EAST\55612214.1

ALL REFERENCES CONSIDERED EXCEPT WHERE LINED THROUGH. /D.C./

Issue Classification	Application/Control No.	Applicant(s)/Patent Under Reexamination
	12837162	CHENG ET AL.
	Examiner	**Art Unit**
	DANIEL CAVALLARI	2836

CPC						
Symbol					Type	Version
			/			
			/			
			/			
			/			
			/			
			/			
			/			
			/			
			/			
			/			
			/			
			/			
			/			
			/			
			/			

CPC Combination Sets							
Symbol					Type	Set	Ranking	Version
			/					
			/					

NONE (Assistant Examiner) (Date)		Total Claims Allowed: 24	
/DANIEL CAVALLARI/ Primary Examiner.Art Unit 2836 (Primary Examiner)	04/01/2014 (Date)	O.G. Print Claim(s) 1	O.G. Print Figure 6

Issue Classification	Application/Control No.	Applicant(s)/Patent Under Reexamination
	12837162	CHENG ET AL.
	Examiner	**Art Unit**
	DANIEL CAVALLARI	2836

US ORIGINAL CLASSIFICATION		INTERNATIONAL CLASSIFICATION	
CLASS	SUBCLASS	CLAIMED	NON-CLAIMED
307	82	H 0 2 J 1 / 00 (2006.01.01)	

CROSS REFERENCE(S)					
CLASS	SUBCLASS (ONE SUBCLASS PER BLOCK)				

NONE (Assistant Examiner) (Date)		Total Claims Allowed: 24	
/DANIEL CAVALLARI/ Primary Examiner.Art Unit 2836 (Primary Examiner) (Date)	04/01/2014	O.G. Print Claim(s) 1	O.G. Print Figure 6

Issue Classification	Application/Control No.	Applicant(s)/Patent Under Reexamination
	12837162	CHENG ET AL.
	Examiner	**Art Unit**
	DANIEL CAVALLARI	2836

☐ Claims renumbered in the same order as presented by applicant ☐ CPA ☐ T.D. ☐ R.1.47

Final	Original	Final	Original	Final	Original	Final	Original	Final	Original	Final	Original	Final	Original	Final	Original
1	1	-	17												
2	2	-	18												
3	3	-	19												
4	4	-	20												
5	5	15	21												
6	6	16	22												
7	7	17	23												
8	8	13	24												
9	9	14	25												
10	10	19	26												
11	11	20	27												
12	12	21	28												
-	13	22	29												
-	14	23	30												
-	15	18	31												
-	16	24	32												

NONE (Assistant Examiner)	(Date)	**Total Claims Allowed:** 24	
/DANIEL CAVALLARI/ Primary Examiner.Art Unit 2836 (Primary Examiner)	04/01/2014 (Date)	O.G. Print Claim(s) 1	O.G. Print Figure 6

U.S. Patent and Trademark Office

Part of Paper No. 20140331

EAST Search History

EAST Search History (Prior Art)

Ref #	Hits	Search Query	DBs	Default Operator	Plurals	Time Stamp
L1	1179	(307/82).CCLS.	US-PGPUB; USPAT; USOCR; FPRS; EPO; JPO; DERWENT; IBM_TDB	OR	OFF	2014/04/01 11:56
S1	70	("20020073713" | "20040264225" | "20080111517" | "5903116" | "6325142" | "6381944" | "20100202177" | "20110012430" | "6360131" | "20020166324" | "6958550" | "20020099476" | "6192668" | "6265786" | "6495929" | "20010052704" | "20040103669" | "6487096" | "6960840" | "6556980" | "20090159113" | "6612112" | "20090000654" | "7016743" | "20040119291" | "20090160258" | "6031294" | "6055524" | "7152052" | "7415446" | "20030007369" | "6784565" | "6870279" | "6684112" | "6684115" | "7142626" | "20040135436").PN.	US-PGPUB; USPAT; USOCR; FPRS; EPO; JPO; DERWENT; IBM_TDB	OR	ON	2013/06/02 14:53
S2	0	S1 and (daiseychain daisey$chain)	US-PGPUB; USPAT; USOCR; FPRS; EPO; JPO; DERWENT; IBM_TDB	OR	ON	2013/06/02 14:54
S3	0	S1 and (daisychain daisy$chain)	US-PGPUB; USPAT; USOCR; FPRS; EPO; JPO; DERWENT; IBM_TDB	OR	ON	2013/06/02 14:54
S5	1791	(inverter converter) and (daisychain daisy$chain)	US-PGPUB; USPAT; USOCR; FPRS; EPO; JPO; DERWENT; IBM_TDB	OR	ON	2013/06/02 14:55
S6	132	(inverter converter) same (daisychain daisy$chain)	US-PGPUB; USPAT; USOCR; FPRS; EPO; JPO; DERWENT; IBM_TDB	OR	ON	2013/06/02 15:00
S7	857	307/82.ccls.	US-PGPUB;	OR	ON	2013/06/02

			USPAT; USOCR; FPRS; EPO; JPO; DERWENT; IBM_TDB			16:09
S8	2	"09275637"	US-PGPUB; USPAT; USOCR; FPRS; EPO; JPO; DERWENT; IBM_TDB	OR	ON	2014/01/07 15:11
S9	8425	("DC/AC" "DC-AC" DC$AC invert$4) with (daisychain daisy$chain Cascad$4)	US-PGPUB; USPAT; USOCR; FPRS; EPO; JPO; DERWENT; IBM_TDB	OR	ON	2014/01/11 16:08
S10	1803	@rlad<"20090716" and ("DC/AC" "DC-AC" DC$AC invert$4) with (daisychain daisy$chain Cascad$4)	US-PGPUB; USPAT; USOCR; FPRS; EPO; JPO; DERWENT; IBM_TDB	OR	ON	2014/01/11 23:29
S11	96	S10 and ("307"/$.ccls. "323"/$.ccls. "363"/$.ccls.)	US-PGPUB; USPAT; USOCR; FPRS; EPO; JPO; DERWENT; IBM_TDB	OR	ON	2014/01/11 23:30
S12	1286	(solar photo$voltaic photovoltaic) and @rlad<"20090716" and ("DC/AC" "DC-AC" DC$AC invert$4) same (module modular)	US-PGPUB; USPAT; USOCR; FPRS; EPO; JPO; DERWENT; IBM_TDB	OR	ON	2014/01/11 23:37
S13	378	(solar photo$voltaic photovoltaic) and @rlad<"20090716" and ("DC/AC" "DC-AC" DC$AC invert$4) and "AC" with bus	US-PGPUB; USPAT; USOCR; FPRS; EPO; JPO; DERWENT; IBM_TDB	OR	ON	2014/01/12 12:13
S14	43	(solar photo$voltaic photovoltaic) and @rlad<"20090716" and ("DC/AC" "DC-AC" DC$AC invert$4) and "AC" with common with bus	US-PGPUB; USPAT; USOCR; FPRS; EPO; JPO; DERWENT; IBM_TDB	OR	ON	2014/01/12 12:20
S15	145	(solar photo$voltaic photovoltaic) and @rlad<"20090716" and ("DC/AC" "DC-AC" DC$AC invert$4) with Synchroniz$4	US-PGPUB; USPAT; USOCR; FPRS; EPO; JPO; DERWENT;	OR	ON	2014/01/12 12:23

			IBM_TDB			
S16	2	("20080283118").PN.	US-PGPUB; USPAT; USOCR; FPRS; EPO; JPO; DERWENT; IBM_TDB	OR	OFF	2014/01/12 12:32
S18	892	@rlad<"20090716" and (inverter "DC AC" DC$AC) and DC near3 (bus common) and AC near3 (bus common)	US-PGPUB; USPAT; USOCR; FPRS; EPO; JPO; DERWENT; IBM_TDB	OR	OFF	2014/03/31 14:57
S19	7505	@rlad<"20090716" and (inverter "DC AC" DC$AC) and (cascad$4 daisy$chain "daisy chain")	US-PGPUB; USPAT; USOCR; FPRS; EPO; JPO; DERWENT; IBM_TDB	OR	OFF	2014/03/31 15:13
S20	2813	@rlad<"20090716" and (inverter "DC AC" DC$AC) same2 (cascad$4 daisy$chain "daisy chain")	US-PGPUB; USPAT; USOCR; FPRS; EPO; JPO; DERWENT; IBM_TDB	OR	OFF	2014/03/31 15:14
S21	223	S20 and ("307"/$.ccls. "700"/$.ccls. "323"/$.ccls. "363"/$.ccls.)	US-PGPUB; USPAT; USOCR; FPRS; EPO; JPO; DERWENT; IBM_TDB	OR	OFF	2014/03/31 15:51
S22	4	("20060162772" | "20090207543" | "20090293864").PN. OR ("8344548").URPN.	US-PGPUB; USPAT; USOCR	OR	OFF	2014/03/31 15:58
S23	304	@rlad<"20090716" and (solar solar$cell solar$panel photo$voltaic photovoltaic) and (cascad$4 daisy$chain "daisy chain") and ("307"/$.ccls. "700"/$.ccls. "323"/$.ccls. "363"/$.ccls.)	US-PGPUB; USPAT; USOCR; FPRS; EPO; JPO; DERWENT; IBM_TDB	OR	OFF	2014/03/31 16:03
S24	230	S23 not S21	US-PGPUB; USPAT; USOCR; FPRS; EPO; JPO; DERWENT; IBM_TDB	OR	OFF	2014/03/31 16:03
S25	134	S24 not (kesler shatz)	US-PGPUB; USPAT; USOCR; FPRS; EPO; JPO; DERWENT; IBM_TDB	OR	OFF	2014/03/31 16:04

4/ 1/ 2014 11:57:20 AM
C:\ Users\ dcavallari\ Documents\ EAST\ Workspaces\ 12837162.wsp

REQUEST FOR CONTINUED EXAMINATION (RCE) TRANSMITTAL	Application Number	12/837,162
	Filing Date	July 15, 2010
	First Named Inventor	George Shu-Xing Cheng
Address to: Mail Stop RCE Commissioner of Patents P.O. Box 1450 Alexandria, VA 22313-1450	Art Unit	2836
	Examiner Name	Daniel J. Cavallari
	Attorney Docket Number	350809-000003

This is a Request for Continued Examination (RCE) under 37 CFR 1.114 of the above-identified application.
Request for Continued Examination (RCE) practice under 37 CFR 1.114 does not apply to any utility or plant application filed prior to June 8, 1995, or to any design application. See Instruction Sheet for RCEs (not to be submitted to the USPTO) on page 2.

Submission required under 37 CFR 1.114 Note: If the RCE is proper, any previously filed unentered amendments and amendments enclosed with the RCE will be entered in the order in which they were filed unless applicant instructs otherwise. If applicant does not wish to have any previously filed unentered amendment(s) entered, applicant must request non-entry of such amendment(s).

☒ Previously submitted. If a final Office action is outstanding, any amendments filed after the final Office action may be considered as a submission even if this box is not checked.

☒ Consider the arguments in the Amendment previously filed on January 8, 2014

☐ Other

☐ Enclosed

☐ Amendment/Reply

☐ Affidavit(s)/Declarations

i) ☐ Information Disclosure Statement (IDS)

ii) ☐ Other _____

Miscellaneous

☐ Suspension of action on the above-identified application is requested under 37 CFR 1.103(c) for a period of _____ months. (Period of suspension shall not exceed 3 months; Fee under 37 CFR 1.17(i) required)

☐ Other _____

Fees The RCE fee under 37 CFR 1.17(e) is required by 37 CFR 1.114 when the RCE is filed.

☐ The Director is hereby authorized to charge the following fees, any underpayment of fees, or credit any overpayments, to Deposit Account No. **18-2284**. I have enclosed a duplicate copy of this sheet.

☐ RCE fee required under 37 CFR 1.17(e)

☐ Extension of time fee (37 CFR 1.136 and 1.17)

☐ Other _____

☐ Check in the amount of _____ enclosed

☒ Payment by credit card (Form PTO-2038 enclosed)

WARNING: Information on this form may become public. Credit card information should not be included on this form. Provide credit card information and authorization on PTO-2038.

SIGNATURE OF APPLICANT, ATTORNEY, OR AGENT, REQUIRED			
Signature	/Dale S. Lazar/	Date	February 11, 2014
Name (Print/Type)	Dale S. Lazar	Registration No.	28,872

EAST\69630458.1

Electronic Patent Application Fee Transmittal	
Application Number:	12837162
Filing Date:	15-Jul-2010
Title of Invention:	SMART AND SCALABLE POWER INVERTERS
First Named Inventor/Applicant Name:	George Shu-Xing CHENG
Filer:	Dale S. Lazar/Ava M. Dixon
Attorney Docket Number:	350809-000003
Filed as Small Entity	

Utility under 35 USC 111(a) Filing Fees

Description	Fee Code	Quantity	Amount	Sub-Total in USD($)
Basic Filing:				
Pages:				
Claims:				
Miscellaneous-Filing:				
Petition:				
Patent-Appeals-and-Interference:				
Post-Allowance-and-Post-Issuance:				
Extension-of-Time:				

Description	Fee Code	Quantity	Amount	Sub-Total in USD($)
Miscellaneous:				
Request for Continued Examination	2801	1	600	600
		Total in USD ($)		**600**

Electronic Acknowledgement Receipt

EFS ID:	18173852
Application Number:	12837162
International Application Number:	
Confirmation Number:	3679
Title of Invention:	SMART AND SCALABLE POWER INVERTERS
First Named Inventor/Applicant Name:	George Shu-Xing CHENG
Customer Number:	47604
Filer:	Dale S. Lazar/Ava M. Dixon
Filer Authorized By:	Dale S. Lazar
Attorney Docket Number:	350809-000003
Receipt Date:	11-FEB-2014
Filing Date:	15-JUL-2010
Time Stamp:	19:03:56
Application Type:	Utility under 35 USC 111(a)

Payment information:

Submitted with Payment	yes
Payment Type	Credit Card
Payment was successfully received in RAM	$600
RAM confirmation Number	5189
Deposit Account	
Authorized User	

File Listing:

Document Number	Document Description	File Name	File Size(Bytes)/ Message Digest	Multi Part /.zip	Pages (if appl.)

1	Request for Continued Examination (RCE)	350809-000003_RCE.pdf	125739 8f14e9d6c419a3dfa8a13abb06b213b1015acdce	no	1
Warnings:					
This is not a USPTO supplied RCE SB30 form.					
Information:					
2	Fee Worksheet (SB06)	fee-info.pdf	30642 abe89b17794cf3412999b761ba53b1fae3c3a851	no	2
Warnings:					
Information:					
		Total Files Size (in bytes):	156381		

This Acknowledgement Receipt evidences receipt on the noted date by the USPTO of the indicated documents, characterized by the applicant, and including page counts, where applicable. It serves as evidence of receipt similar to a Post Card, as described in MPEP 503.

<u>New Applications Under 35 U.S.C. 111</u>
If a new application is being filed and the application includes the necessary components for a filing date (see 37 CFR 1.53(b)-(d) and MPEP 506), a Filing Receipt (37 CFR 1.54) will be issued in due course and the date shown on this Acknowledgement Receipt will establish the filing date of the application.

<u>National Stage of an International Application under 35 U.S.C. 371</u>
If a timely submission to enter the national stage of an international application is compliant with the conditions of 35 U.S.C. 371 and other applicable requirements a Form PCT/DO/EO/903 indicating acceptance of the application as a national stage submission under 35 U.S.C. 371 will be issued in addition to the Filing Receipt, in due course.

<u>New International Application Filed with the USPTO as a Receiving Office</u>
If a new international application is being filed and the international application includes the necessary components for an international filing date (see PCT Article 11 and MPEP 1810), a Notification of the International Application Number and of the International Filing Date (Form PCT/RO/105) will be issued in due course, subject to prescriptions concerning national security, and the date shown on this Acknowledgement Receipt will establish the international filing date of the application.

PTO/SB/06 (09-11)
Approved for use through 1/31/2014. OMB 0651-0032
U.S. Patent and Trademark Office; U.S. DEPARTMENT OF COMMERCE
Under the Paperwork Reduction Act of 1995, no persons are required to respond to a collection of information unless it displays a valid OMB control number.

PATENT APPLICATION FEE DETERMINATION RECORD Substitute for Form PTO-875	Application or Docket Number 12/837,162	Filing Date 07/15/2010	☐ To be Mailed

ENTITY: ☐ LARGE ☒ SMALL ☐ MICRO

APPLICATION AS FILED – PART I

FOR	(Column 1) NUMBER FILED	(Column 2) NUMBER EXTRA	RATE ($)	FEE ($)
☐ BASIC FEE (37 CFR 1.16(a), (b), or (c))	N/A	N/A	N/A	
☐ SEARCH FEE (37 CFR 1.16(k), (i), or (m))	N/A	N/A	N/A	
☐ EXAMINATION FEE (37 CFR 1.16(o), (p), or (q))	N/A	N/A	N/A	
TOTAL CLAIMS (37 CFR 1.16(i))	minus 20 =	*	X $ =	
INDEPENDENT CLAIMS (37 CFR 1.16(h))	minus 3 =	*	X $ =	
☐ APPLICATION SIZE FEE (37 CFR 1.16(s))	If the specification and drawings exceed 100 sheets of paper, the application size fee due is $310 ($155 for small entity) for each additional 50 sheets or fraction thereof. See 35 U.S.C. 41(a)(1)(G) and 37 CFR 1.16(s).			
☐ MULTIPLE DEPENDENT CLAIM PRESENT (37 CFR 1.16(j))				
* If the difference in column 1 is less than zero, enter "0" in column 2.			TOTAL	

APPLICATION AS AMENDED – PART II

AMENDMENT

02/11/2014	(Column 1) CLAIMS REMAINING AFTER AMENDMENT		(Column 2) HIGHEST NUMBER PREVIOUSLY PAID FOR	(Column 3) PRESENT EXTRA	RATE ($)	ADDITIONAL FEE ($)
Total (37 CFR 1.16(i))	* 32	Minus	** 32	= 0	X $40 =	0
Independent (37 CFR 1.16(h))	* 7	Minus	***7	= 0	X $210 =	0
☐ Application Size Fee (37 CFR 1.16(s))						
☐ FIRST PRESENTATION OF MULTIPLE DEPENDENT CLAIM (37 CFR 1.16(j))						
					TOTAL ADD'L FEE	**0**

AMENDMENT

	(Column 1) CLAIMS REMAINING AFTER AMENDMENT		(Column 2) HIGHEST NUMBER PREVIOUSLY PAID FOR	(Column 3) PRESENT EXTRA	RATE ($)	ADDITIONAL FEE ($)
Total (37 CFR 1.16(i))	*	Minus	**	=	X $ =	
Independent (37 CFR 1.16(h))	*	Minus	***	=	X $ =	
☐ Application Size Fee (37 CFR 1.16(s))						
☐ FIRST PRESENTATION OF MULTIPLE DEPENDENT CLAIM (37 CFR 1.16(j))						
					TOTAL ADD'L FEE	

* If the entry in column 1 is less than the entry in column 2, write "0" in column 3.
** If the "Highest Number Previously Paid For" IN THIS SPACE is less than 20, enter "20".
*** If the "Highest Number Previously Paid For" IN THIS SPACE is less than 3, enter "3".
The "Highest Number Previously Paid For" (Total or Independent) is the highest number found in the appropriate box in column 1.

LIE
/VICTORIA BROWN/

This collection of information is required by 37 CFR 1.16. The information is required to obtain or retain a benefit by the public which is to file (and by the USPTO to process) an application. Confidentiality is governed by 35 U.S.C. 122 and 37 CFR 1.14. This collection is estimated to take 12 minutes to complete, including gathering, preparing, and submitting the completed application form to the USPTO. Time will vary depending upon the individual case. Any comments on the amount of time you require to complete this form and/or suggestions for reducing this burden, should be sent to the Chief Information Officer, U.S. Patent and Trademark Office, U.S. Department of Commerce, P.O. Box 1450, Alexandria, VA 22313-1450. DO NOT SEND FEES OR COMPLETED FORMS TO THIS ADDRESS. **SEND TO: Commissioner for Patents, P.O. Box 1450, Alexandria, VA 22313-1450.**
If you need assistance in completing the form, call 1-800-PTO-9199 and select option 2.

UNITED STATES PATENT AND TRADEMARK OFFICE

UNITED STATES DEPARTMENT OF COMMERCE
United States Patent and Trademark Office
Address: COMMISSIONER FOR PATENTS
P.O. Box 1450
Alexandria, Virginia 22313-1450
www.uspto.gov

APPLICATION NO.	FILING DATE	FIRST NAMED INVENTOR	ATTORNEY DOCKET NO.	CONFIRMATION NO.
12/837,162	07/15/2010	George Shu-Xing CHENG	350809-000003	3679

47604 7590 01/27/2014
DLA PIPER LLP US
P. O. BOX 2758
RESTON, VA 20195

EXAMINER
CAVALLARI, DANIEL J

ART UNIT	PAPER NUMBER
2836	

NOTIFICATION DATE	DELIVERY MODE
01/27/2014	ELECTRONIC

Please find below and/or attached an Office communication concerning this application or proceeding.

The time period for reply, if any, is set in the attached communication.

Notice of the Office communication was sent electronically on above-indicated "Notification Date" to the following e-mail address(es):

PatentProsecutionRes@dlapiper.com

UNITED STATES DEPARTMENT OF COMMERCE
U.S. Patent and Trademark Office
Address : COMMISSIONER FOR PATENTS
P.O. Box 1450
Alexandria, Virginia 22313-1450

APPLICATION NO./ CONTROL NO.	FILING DATE	FIRST NAMED INVENTOR / PATENT IN REEXAMINATION	ATTORNEY DOCKET NO.
12/837,162	15 July, 2010	CHENG ET AL.	350809-000003

		EXAMINER	
DLA PIPER LLP US P. O. BOX 2758 RESTON, VA 20195		DANIEL CAVALLARI	
		ART UNIT	PAPER
		2836	20140120

DATE MAILED:

Please find below and/or attached an Office communication concerning this application or proceeding.

Commissioner for Patents

Applicant's request for entry into AFCP 2.0 is acknowledged, but is denied because the response cannot be reviewed and a search conducted in the limited amount of time authrorized for this pilot program. Therefore, the response is being reviewed under pre-pilot practice.

Particularly, proposed amendments to claim 26 fail to recite features previously deemed to be novel, such as the "daisy chain" configuration and therefore require a more detailed search.

/DANIEL CAVALLARI/
Primary Examiner, Art Unit 2836

PTO-90C (Rev.04-03)

Advisory Action Before the Filing of an Appeal Brief	**Application No.** *12/837,162*	**Applicant(s)** CHENG ET AL.	
	Examiner DANIEL CAVALLARI	**Art Unit** 2836	**AIA (First Inventor to File) Status** No

--The MAILING DATE of this communication appears on the cover sheet with the correspondence address --

THE REPLY FILED 08 January 2014 FAILS TO PLACE THIS APPLICATION IN CONDITION FOR ALLOWANCE.

NO NOTICE OF APPEAL FILED

1. ☐ The reply was filed after a final rejection. No Notice of Appeal has been filed. To avoid abandonment of this application, applicant must timely file one of the following replies: (1) an amendment, affidavit, or other evidence, which places the application in condition for allowance; (2) a Notice of Appeal (with appeal fee) in compliance with 37 CFR 41.31; or (3) a Request for Continued Examination (RCE) in compliance with 37 CFR 1.114 if this is a utility or plant application. Note that RCEs are not permitted in design applications. The reply must be filed within one of the following time periods:
   a) ☐ The period for reply expires _____months from the mailing date of the final rejection.
   b) ☒ The period for reply expires on: (1) the mailing date of this Advisory Action; or (2) the date set forth in the final rejection, whichever is later. In no event, however, will the statutory period for reply expire later than SIX MONTHS from the mailing date of the final rejection.
   c) ☐ A prior Advisory Action was mailed more than 3 months after the mailing date of the final rejection in response to a first after-final reply filed within 2 months of the mailing date of the final rejection. The current period for reply expires months from the mailing date of *the prior Advisory Action* or SIX MONTHS from the mailing date of the final rejection, whichever is earlier.
   Examiner Note: If box 1 is checked, check either box (a), (b) or (c). ONLY CHECK BOX (b) WHEN THIS ADVISORY ACTION IS THE FIRST RESPONSE TO APPLICANT'S FIRST AFTER-FINAL REPLY WHICH WAS FILED WITHIN TWO MONTHS OF THE FINAL REJECTION. ONLY CHECK BOX (c) IN THE LIMITED SITUATION SET FORTH UNDER BOX (c). See MPEP 706.07(f).

Extensions of time may be obtained under 37 CFR 1.136(a). The date on which the petition under 37 CFR 1.136(a) and the appropriate extension fee have been filed is the date for purposes of determining the period of extension and the corresponding amount of the fee. The appropriate extension fee under 37 CFR 1.17(a) is calculated from: (1) the expiration date of the shortened statutory period for reply originally set in the final Office action; or (2) as set forth in (b) or (c) above, if checked. Any reply received by the Office later than three months after the mailing date of the final rejection, even if timely filed, may reduce any earned patent term adjustment. See 37 CFR 1.704(b).

NOTICE OF APPEAL

2. ☐ The Notice of Appeal was filed on _____. A brief in compliance with 37 CFR 41.37 must be filed within two months of the date of filing the Notice of Appeal (37 CFR 41.37(a)), or any extension thereof (37 CFR 41.37(e)), to avoid dismissal of the appeal. Since a Notice of Appeal has been filed, any reply must be filed within the time period set forth in 37 CFR 41.37(a).

AMENDMENTS

3. ☒ The proposed amendments filed after a final rejection, but prior to the date of filing a brief, will not be entered because
   a) ☒ They raise new issues that would require further consideration and/or search (see NOTE below);
   b) ☐ They raise the issue of new matter (see NOTE below);
   c) ☐ They are not deemed to place the application in better form for appeal by materially reducing or simplifying the issues for appeal; and/or
   d) ☐ They present additional claims without canceling a corresponding number of finally rejected claims.
   NOTE: _____. (See 37 CFR 1.116 and 41.33(a)).
4. ☐ The amendments are not in compliance with 37 CFR 1.121. See attached Notice of Non-Compliant Amendment (PTOL-324).
5. ☐ Applicant's reply has overcome the following rejection(s): _____.
6. ☐ Newly proposed or amended claim(s) _____ would be allowable if submitted in a separate, timely filed amendment canceling the non-allowable claim(s).
7. ☐ For purposes of appeal, the proposed amendment(s): (a) ☐ will not be entered, or (b) ☐ will be entered, and an explanation of how the new or amended claims would be rejected is provided below or appended.

AFFIDAVIT OR OTHER EVIDENCE

8. ☐ A declaration(s)/affidavit(s) under **37 CFR 1.130(b)** was/were filed on _____.
9. ☐ The affidavit or other evidence filed after final action, but before or on the date of filing a Notice of Appeal will not be entered because applicant failed to provide a showing of good and sufficient reasons why the affidavit or other evidence is necessary and was not earlier presented. See 37 CFR 1.116(e).
10. ☐ The affidavit or other evidence filed after the date of filing the Notice of Appeal, but prior to the date of filing a brief, will not be entered because the affidavit or other evidence failed to overcome all rejections under appeal and/or appellant fails to provide a showing of good and sufficient reasons why it is necessary and was not earlier presented. See 37 CFR 41.33(d)(1).
11. ☐ The affidavit or other evidence is entered. An explanation of the status of the claims after entry is below or attached.

REQUEST FOR RECONSIDERATION/OTHER

12. ☒ The request for reconsideration has been considered but does NOT place the application in condition for allowance because: See Continuation Sheet.
13. ☐ Note the attached Information *Disclosure Statement*(s). (PTO/SB/08) Paper No(s). _____
14. ☐ Other: _____.

STATUS OF CLAIMS

15. The status of the claim(s) is (or will be) as follows:
   Claim(s) allowed: 1-12,24 and 25.
   Claim(s) objected to: .
   Claim(s) rejected: 21-23 and 26-30.
   Claim(s) withdrawn from consideration: .

/DANIEL CAVALLARI/
Primary Examiner, Art Unit 2836

Continuation of 11. does NOT place the application in condition for allowance because: Further search is required (noting denial of entry into AFCP because the response cannpt be reviewed and a search conducted in the limited amount of time authorized for this pilot program, see PTO-90).

Doc Code: A.NE.AFCP
Document Description: After Final Consideration Pilot Program Request

PTO/SB/434 (05-13)

CERTIFICATION AND REQUEST FOR CONSIDERATION UNDER THE AFTER FINAL CONSIDERATION PILOT PROGRAM 2.0

Practitioner Docket No.:	Application No.:	Filing Date:
350809-000003	12/837,162	July 15, 2010
First Named Inventor:	Title:	
George Shu-Xing CHENG	SMART AND SCALEABLE POWER INVERTERS	

APPLICANT HEREBY CERTIFIES THE FOLLOWING AND REQUESTS CONSIDERATION UNDER THE AFTER FINAL CONSIDERATION PILOT PROGRAM 2.0 (AFCP 2.0) OF THE ACCOMPANYING RESPONSE UNDER 37 CFR 1.116.

1. The above-identified application is (i) an original utility, plant, or design nonprovisional application filed under 35 U.S.C. 111(a) [a continuing application (*e.g.*, a continuation or divisional application) is filed under 35 U.S.C. 111(a) and is eligible under (i)], or (ii) an international application that has entered the national stage in compliance with 35 U.S.C. 371(c).
2. The above-identified application contains an outstanding final rejection.
3. Submitted herewith is a response under 37 CFR 1.116 to the outstanding final rejection. The response includes an amendment to at least one independent claim, and the amendment does not broaden the scope of the independent claim in any aspect.
4. This certification and request for consideration under AFCP 2.0 is the only AFCP 2.0 certification and request filed in response to the outstanding final rejection.
5. Applicant is willing and available to participate in any interview requested by the examiner concerning the present response.
6. This certification and request is being filed electronically using the Office's electronic filing system (EFS-Web).
7. Any fees that would be necessary consistent with current practice concerning responses after final rejection under 37 CFR 1.116, *e.g.*, extension of time fees, are being concurrently filed herewith. [There is no additional fee required to request consideration under AFCP 2.0.]
8. By filing this certification and request, applicant acknowledges the following:
   - Reissue applications and reexamination proceedings are not eligible to participate in AFCP 2.0.
   - The examiner will verify that the AFCP 2.0 submission is compliant, *i.e.*, that the requirements of the program have been met (see items 1 to 7 above). For compliant submissions:
     - The examiner will review the response under 37 CFR 1.116 to determine if additional search and/or consideration (i) is necessitated by the amendment and (ii) could be completed within the time allotted under AFCP 2.0. If additional search and/or consideration is required but cannot be completed within the allotted time, the examiner will process the submission consistent with current practice concerning responses after final rejection under 37 CFR 1.116, *e.g.*, by mailing an advisory action.
     - If the examiner determines that the amendment does not necessitate additional search and/or consideration, or if the examiner determines that additional search and/or consideration is required and could be completed within the allotted time, then the examiner will consider whether the amendment places the application in condition for allowance (after completing the additional search and/or consideration, if required). If the examiner determines that the amendment does not place the application in condition for allowance, then the examiner will contact the applicant and request an interview.
       - The interview will be conducted by the examiner, and if the examiner does not have negotiation authority, a primary examiner and/or supervisory patent examiner will also participate.
       - If the applicant declines the interview, or if the interview cannot be scheduled within ten (10) calendar days from the date that the examiner first contacts the applicant, then the examiner will proceed consistent with current practice concerning responses after final rejection under 37 CFR 1.116.

Signature	Date
/Dale S. Lazar/	January 8, 2014
Name (Print/Typed) Dale S. Lazar	Practitioner Registration No. 28872

Note: *This form must be signed in accordance with 37 CFR 1.33. See 37 CFR 1.4(d) for signature requirements and certifications. Submit multiple forms if more than one signature is required, see below*.*

[✓] * Total of 1 forms are submitted.

Privacy Act Statement

The **Privacy Act of 1974 (P.L. 93-579)** requires that you be given certain information in connection with your submission of the attached form related to a patent application or patent. Accordingly, pursuant to the requirements of the Act, please be advised that: (1) the general authority for the collection of this information is 35 U.S.C. 2(b)(2); (2) furnishing of the information solicited is voluntary; and (3) the principal purpose for which the information is used by the U.S. Patent and Trademark Office is to process and/or examine your submission related to a patent application or patent. If you do not furnish the requested information, the U.S. Patent and Trademark Office may not be able to process and/or examine your submission, which may result in termination of proceedings or abandonment of the application or expiration of the patent.

The information provided by you in this form will be subject to the following routine uses:

1. The information on this form will be treated confidentially to the extent allowed under the Freedom of Information Act (5 U.S.C. 552) and the Privacy Act (5 U.S.C 552a). Records from this system of records may be disclosed to the Department of Justice to determine whether disclosure of these records is required by the Freedom of Information Act.
2. A record from this system of records may be disclosed, as a routine use, in the course of presenting evidence to a court, magistrate, or administrative tribunal, including disclosures to opposing counsel in the course of settlement negotiations.
3. A record in this system of records may be disclosed, as a routine use, to a Member of Congress submitting a request involving an individual, to whom the record pertains, when the individual has requested assistance from the Member with respect to the subject matter of the record.
4. A record in this system of records may be disclosed, as a routine use, to a contractor of the Agency having need for the information in order to perform a contract. Recipients of information shall be required to comply with the requirements of the Privacy Act of 1974, as amended, pursuant to 5 U.S.C. 552a(m).
5. A record related to an International Application filed under the Patent Cooperation Treaty in this system of records may be disclosed, as a routine use, to the International Bureau of the World Intellectual Property Organization, pursuant to the Patent Cooperation Treaty.
6. A record in this system of records may be disclosed, as a routine use, to another federal agency for purposes of National Security review (35 U.S.C. 181) and for review pursuant to the Atomic Energy Act (42 U.S.C. 218(c)).
7. A record from this system of records may be disclosed, as a routine use, to the Administrator, General Services, or his/her designee, during an inspection of records conducted by GSA as part of that agency's responsibility to recommend improvements in records management practices and programs, under authority of 44 U.S.C. 2904 and 2906. Such disclosure shall be made in accordance with the GSA regulations governing inspection of records for this purpose, and any other relevant (*i.e.*, GSA or Commerce) directive. Such disclosure shall not be used to make determinations about individuals.
8. A record from this system of records may be disclosed, as a routine use, to the public after either publication of the application pursuant to 35 U.S.C. 122(b) or issuance of a patent pursuant to 35 U.S.C. 151. Further, a record may be disclosed, subject to the limitations of 37 CFR 1.14, as a routine use, to the public if the record was filed in an application which became abandoned or in which the proceedings were terminated and which application is referenced by either a published application, an application open to public inspection or an issued patent.
9. A record from this system of records may be disclosed, as a routine use, to a Federal, State, or local law enforcement agency, if the USPTO becomes aware of a violation or potential violation of law or regulation.

DOCKET NO. 350809-000003 PATENT

IN THE UNITED STATES PATENT AND TRADEMARK OFFICE

In Re Application of:	George Shu-Xing CHENG		Conf. No.: 3679
Application No.	12/837,162	Group Art Unit:	2836
Filed:	July 15, 2010	Examiner:	Daniel J. Cavallari
For:	SMART AND SCALABLE POWER INVERTERS		

AFTER FINAL AMENDMENT UNDER 37 C.F.R. 1.116

Commissioner for Patents
PO Box 1450
Alexandria, VA 22313-1450

January 8, 2014

Dear Commissioner:

This is in response to the Final Office Action dated November 27, 2013, and having a period for response set to expire on February 27, 2014.

The following amendments and remarks are respectfully submitted. Reconsideration of the claims is respectfully requested.

Amendments to the Claims begin on page 2 of this paper.

Remarks/Arguments begin on page 15 of this paper.

Amendments to the Claims:

This listing of claims will replace all prior versions, and listings, of claims in the application. Currently amended claims are shown with additions underlined and deletions in ~~strikethrough text~~ except double brackets may be placed before and after the deleted characters to show deletion of five or fewer characters.

1. (Original) A system for providing AC power to a power grid from a plurality of individual DC power sources each having a DC power output port, comprising:

a) a plurality of power inverters, each of said power inverters having one DC power input port, an AC power input port, and an AC power output port, said DC power input port having one DC power source connected thereto;

b) said AC power output port of each inverter being connected in a daisy chain to the AC power input port of the next inverter, except for the AC power input port of the first inverter being left open, and the AC power output port of the last inverter being connected to a power service panel of the power grid;

c) each of said power inverters including:

i) a DC-DC boost converter connected to said DC power source and arranged to convert the power source voltage to a higher DC voltage suitable for inversion;

ii) a DC-AC inverter connected to said DC-DC boost converter and arranged to invert the DC power to AC power with voltage higher than the incoming AC power voltage;

iii) an internal AC powerline that combines the generated AC power with the external AC power from the power grid;

iv) a load interface circuit connected to said DC-AC inverter and to said internal AC powerline, said load interface circuit being arranged to filter high-frequency components out of the said DC-AC inverter's AC output;

v) an MFA microcontroller connected to said DC-DC boost converter, DC-AC inverter, and load interface circuit, said microcontroller arranged to monitor the DC boost voltage, control the DC-DC boost converter, perform maximum power point tracking (MPPT), perform DC-AC inversion and AC power synchronization, monitor AC current and voltage for generated power amount and status, perform powerline communications, and perform logic controls such as AC powerline switching and isolation;

vi) a powerline modem connected to said microcontroller and said internal AC powerline through an interface circuitry for transmitting and receiving performance data between said microcontroller and said power grid;

vii) a line sensing circuit connected to said internal AC powerline and said microcontroller for detecting the phase and zero-crossing point of the incoming AC power from the power grid; and

viii) a solid state switch connected to said internal AC powerline and external AC powerline, and arranged to disconnect said internal AC powerline from the AC grid during the non-generation time.

2. (Original) The system of Claim 1, in which the output of each of said power inverters is single-phase AC.

3. (Original) The system of Claim 1, in which the output of each of said power inverters is three-phase AC.

4. (Original) The system of Claim 1, in which said MFA microcontroller includes Model-Free Adaptive (MFA) controllers which control the DC-DC boost converter, and MFA optimizers which provide maximum power point tracking (MPPT) to allow the power inverter to achieve optimal power production.

5. (Original) A system for providing AC power to a power grid from a plurality of individual DC power sources each having a DC power output port, comprising:

a) a plurality of power inverters, each of said power inverters having two DC power input ports, an AC power input port, and an AC power output port, each of said DC power input ports having one DC power source connected thereto;

b) aid AC power output port of each inverter being connected in a daisy chain to the AC power input port of the next inverter, except for the AC power input port of the first inverter being left open, and the AC power output port of the last inverter being connected to a power service panel of the power grid;

c) each of said power inverters including:

i) a pair of DC-DC boost converters, one connected to each of said DC power sources, respectively, and arranged to convert the power source voltage to a higher DC voltage suitable for inversion;

ii) a DC power combiner connected to said DC-DC boost converters for combining the DC output from both DC-DC boost converters and allowing said DC-DC boost converters to connect in parallel so that all DC currents are added together;

iii) a DC-AC inverter connected to said DC power combiner and arranged to invert the DC power to AC power with voltage higher than the incoming AC power voltage;

iv) an internal AC powerline that combines the generated AC power with the external AC power from the power grid;

v) a load interface circuit connected to said DC-AC inverter and to said internal AC powerline, said load interface circuit being arranged to filter high-frequency components out of the said DC-AC inverter's AC output;

vi) an MFA microcontroller connected to said DC-DC boost converters, DC-AC inverter, and load interface circuit, said microcontroller arranged to monitor the DC boost voltage, control the DC-DC boost converter, perform maximum power point tracking (MPPT), perform DC-AC inversion and AC power synchronization, monitor AC current and voltage for generated power amount and status, perform powerline communications, and perform logic controls such as AC powerline switching and isolation;

vii) a powerline modem connected to said microcontroller and said internal AC powerline through an interface circuitry for transmitting and receiving performance data between said microcontroller and said power grid;

viii) a line sensing circuit connected to said internal AC powerline and said microcontroller for detecting the phase and zero-crossing point of the incoming AC power from the power grid; and

ix) a solid state switch connected to said internal AC powerline and external AC powerline, and arranged to disconnect said internal AC powerline from the AC grid during the non-generation time.

6. (Original) The system of Claim 5, in which the output of each of said power inverters is single-phase AC.

7. (Original) The system of Claim 5, in which the output of each of said power inverters is three-phase AC.

8. (Original) The system of Claim 5, in which said MFA microcontroller includes Model-Free Adaptive (MFA) controllers which control the DC-DC boost converters, and MFA optimizers which provide maximum power point tracking (MPPT) to allow the power inverter to achieve optimal power production.

9. (Original) A system for providing AC power to a power grid from a plurality of individual DC power sources each having a DC power output port, comprising:

a) a plurality of power inverters, each of said power inverters having m DC power input ports, where m is an integer greater than or equal to one, an AC power input port, and an AC power output port, each of said DC power input ports having one DC power source connected thereto;

b) said AC power output port of each inverter being connected in a daisy chain to the AC power input port of the next inverter, except for the AC power input port of the first inverter being left open, and the AC power output port of the last inverter being connected to a power service panel of the power grid;

c) each of said power inverters including:

i) m number of DC-DC boost converters, one connected to each of said DC power sources, respectively, and arranged to convert the power source voltage to a higher DC voltage suitable for inversion;

ii) a DC power combiner connected to said m number of DC-DC boost converters for combining the DC output from all DC-DC boost converters and allowing said DC-DC boost converters to connect in parallel so that all DC currents are added together;

iii) a DC-AC inverter connected to said DC power combiner and arranged to invert the DC power to AC power with voltage higher than the incoming AC power voltage;

iv) an internal AC powerline that combines the generated AC power with the external AC power from the power grid;

v) a load interface circuit connected to said DC-AC inverter and to said internal AC powerline, said load interface circuit being arranged to filter high-frequency components out of the said DC-AC inverter's AC output;

vi) an MFA microcontroller connected to said DC-DC boost converters, DC-AC inverter, and load interface circuit, said microcontroller arranged to monitor the DC boost voltage, control the DC-DC boost converter, perform maximum power point tracking (MPPT), perform DC-AC inversion and AC power synchronization, monitor AC current and voltage for generated power amount and status, perform powerline communications, and perform logic controls such as AC powerline switching and isolation;

vii) a powerline modem connected to said microcontroller and said internal AC powerline through an interface circuitry for transmitting and receiving performance data between said microcontroller and said power grid;

viii) a line sensing circuit connected to said internal AC powerline and said microcontroller for detecting the phase and zero-crossing point of the incoming AC power from the power grid; and

ix) a solid state switch connected to said internal AC powerline and external AC powerline, and arranged to disconnect said internal AC powerline from the AC grid during the non-generation time.

10. (Original) The system of Claim 9, in which the output of each of said power inverters is single-phase AC.

11. (Original) The system of Claim 9, in which the output of each of said power inverters is three-phase AC.

12. (Original) The system of Claim 9, in which said MFA microcontroller includes Model-Free Adaptive (MFA) controllers which control the DC-DC boost converters, and MFA optimizers which provide maximum power point tracking (MPPT) to allow the power inverter to achieve optimal power production.

13. (Withdrawn) A DC- to-AC power inverter, comprising:

a) one DC power input port having one DC power source connected thereto;

b) one AC power output port arranged to supply AC power to the AC power grid;

c) a DC-DC boost converter connected to said DC power source and arranged to convert the power source voltage to a higher DC voltage suitable for inversion;

d) a DC-AC inverter connected to said DC-DC boost converter and arranged to invert the DC power to AC power with voltage higher than the incoming AC power voltage;

e) an internal AC powerline that combines the generated AC power with the external AC power from the AC power grid;

f) a load interface circuit connected to said DC-AC inverter and to said internal AC powerline, said load interface circuit being arranged to filter high-frequency components out of the said DC-AC inverter's AC output;

g) an MFA microcontroller connected to said DC-DC boost converter, DC-AC inverter, and load interface circuit, said microcontroller arranged to monitor the DC boost voltage, control the DC-DC boost converter, perform maximum power point tracking (MPPT), perform DC-AC inversion and AC power synchronization, monitor AC current and voltage for generated power amount and status, perform powerline communications, and perform logic controls such as AC powerline switching and isolation;

h) a powerline modem connected to said microcontroller and said internal AC powerline through an interface circuitry for transmitting and receiving performance data between said microcontroller and said power grid;

i) a line sensing circuit connected to said internal AC powerline and said microcontroller for detecting the phase and zero-crossing point of the incoming AC power from the power grid; and

j) a solid state switch connected to said internal AC powerline and external AC powerline, and arranged to disconnect said internal AC powerline from the AC grid during the non-generation time.

14. (Withdrawn) The inverter of Claim 13, in which the output of said inverter is single-phase AC.

15. (Withdrawn) The inverter of Claim 13, in which the output of said inverter is three-phase AC.

16. (Withdrawn) The inverter of Claim 13, in which said MFA microcontroller includes Model-Free Adaptive (MFA) controllers which control the DC-DC boost converter, and MFA optimizers which provide maximum power point tracking (MPPT) to allow the power inverter to achieve optimal power production.

17. (Withdrawn) A DC- to-AC power inverter, comprising:

a) at least two DC power input ports, each of said DC power input ports having one DC power source connected thereto;

b) one AC power output port arranged to supply AC power to the AC power grid;

c) for each DC power source, a DC-DC boost converter connected to said DC power sources and arranged to convert the power source voltage to a higher DC voltage suitable for inversion;

d) a DC power combiner connected to said DC-DC boost converters for combining the DC output from all DC-DC boost converters and allowing the said DC-DC boost converters to connect in parallel so that all DC currents are added together;

e) a DC-AC inverter connected to said DC power combiner and arranged to invert the DC power to AC power with voltage higher than the incoming AC power voltage;

f) an internal AC powerline that combines the generated AC power with the external AC power from the power grid;

g) a load interface circuit connected to said DC-AC inverter and to said internal AC powerline, said load interface circuit being arranged to filter high-frequency components out of the said DC-AC inverter's AC output;

h) an MFA microcontroller connected to said DC-DC boost converters, DC-AC inverter, and load interface circuit, said microcontroller arranged to monitor the DC boost voltage, control the DC-DC boost converter, perform maximum power point tracking (MPPT), perform DC-AC inversion and AC power synchronization, monitor AC current and voltage for generated power amount and status, perform powerline communications, and perform logic controls such as AC powerline switching and isolation;

i) a powerline modem connected to said microcontroller and said internal AC powerline through an interface circuitry for transmitting and receiving performance data between said microcontroller and said power grid;

j) a line sensing circuit connected to said internal AC powerline and said microcontroller for detecting the phase and zero-crossing point of the incoming AC power from the power grid; and

k) a solid state switch connected to said internal AC powerline and external AC powerline, and arranged to disconnect said internal AC powerline from the AC grid during the non-generation time.

18. (Withdrawn) The inverter of Claim 17, in which the output of said inverter is single-phase AC.

19. (Withdrawn) The inverter of Claim 17, in which the output of said inverter is three-phase AC.

20. (Withdrawn) The inverter of Claim 17, in which said MFA microcontroller includes Model-Free Adaptive (MFA) controllers which control the DC-DC boost converters, and MFA optimizers which provide maximum power point tracking (MPPT) to allow the power inverter to achieve optimal power production.

21. (Currently Amended) A scalable DC to AC power inversion system for providing AC power to a power grid from a plurality of individual DC power sources each having a DC power output port, comprising:

a) a plurality of power inverters, each of said power inverters ~~having~~ including a single DC-AC inverter, at least two DC power input ports coupled to the single DC-AC inverter, an AC power input port, and an AC power output port coupled to the single DC-AC inverter, each of said DC power input ports having one DC power source connected thereto;

b) said AC power output port of each power inverter being connected in a daisy chain to the AC power input port of the next power inverter, except for the AC power input port of the first power inverter being left open, and the AC power output port of the last power inverter being connected to a power service panel of the power grid;

c) whereby said system is incrementally scalable by adding or subtracting DC power sources and daisy-chained inverters.

22. (Original) The system of Claim 21, in which the output of each of said power inverters is single-phase AC.

23. (Original) The system of Claim 21, in which the output of each of said power inverters is three-phase AC.

24. (Previously Presented) The system of Claim 9, in which the said MFA microcontroller is programmed with a main program to iteratively:

a) turn on and off the inverter's generation circuit based on the DC power source input and conditions of the inverter and AC powerline,
b) calculate the inverter's power statistics such as the amount of power generated during a certain period of time;
c) perform diagnostics for the inverter's status and operation;
d) set the inverter's unit address;
e) perform powerline communications; and
f) respond to queries from data gathering or acquisition devices to report the power statistics.

25. (Original) The system of Claim 24, in which said MFA microcontroller is further programmed with an interrupt service routine (ISR) to:

a) respond to an interrupt;
b) save the current context of the main program;
c) read voltage and current signals from the DC source, DC-DC boost converter, and DC-AC inverter;
d) read phase and zero-crossing point data of the AC powerline;
e) perform maximum power point tracking (MPPT) for each DC power source connected to the inverter;
f) perform DC-AC inversion and AC synchronization;
g) send out PWM control signals through the digital output ports; and
h) restore the saved context of the main program so that the execution of the main program can be resumed.

26. (Currently Amended) A method of making a DC to AC power conversion system incrementally scalable, comprising:

a) providing a plurality of DC power sources and a plurality of DC to AC power inverters, said <u>DC to AC power</u> inverters each having <u>a single DC-AC inverter,</u> an

AC input port coupled to the single DC-AC inverter, an AC output port coupled to the single DC-AC inverter, and at least two DC input ports coupled to the single DC-AC inverter;

b) connecting at least one of said DC power sources, respectively, to each ~~at least one~~ of said DC input ports; and

c) providing AC power to the power grid.

27. (Original) The method of Claim 26, in which the output of each of said power inverters is single-phase AC.

28. (Original) The method of Claim 26, in which the output of each of said power inverters is three-phase AC.

29. (Currently Amended) The method of claim 26 further comprising daisy-chaining at least two of said DC to AC power inverters, said AC power output port of each DC to AC power inverter being connected in a daisy chain to the AC power input port of the next DC to AC power inverter, except for the AC power input port of the first DC to AC power inverter being left open, and the AC power output port of the last DC to AC power inverter being connected to a power service panel of the power grid.

30. (Currently Amended) The method of claim 26 where the providing of AC power includes producing a total AC power that is the summation of the AC power supplied by each said DC to AC power inverter.

31. (Previously Presented) The system of claim 21 further comprising a first DC power source connected to one of said DC power input ports of one of said power inverters and a second DC power source, different in kind from said first DC power source, connected to another of said DC power input ports of said one power inverter.

32. (Previously Presented) The method of claim 26 further comprising:

a) connecting a first DC power source to one of said DC power input ports of one of said power inverters; and

b) connecting a second DC power source, different in kind from said first DC power source, to another of said DC power input ports of said one power inverter.

Remarks/Arguments

Claims 21 through 23 and 26 through 30 stand rejected as obvious over Aoki. Independent Claims 21 and 26 have been amended to obviate this rejection. Claims 29 and 30 have been amended to enhance clarity. Claims 22 and 23 depend from Claim 21 and Claims 27 through 30 depend from Claim 26.

In order to make the rejection, the Office Action combines inverter pair 100 and 200 of Aoki as one inverter and inverter pair 300 and 400 of Aoki as another inverter. However, power inverter 100 of Aoki includes DC-AC inverter 120. Similarly, power inverter 200 includes DC-AC inverter 220. Similarly, each of power inverters 300 and 400 include DC-AC inverters 320 and 420. Clearly, Aoki teaches coupling a single DC source to each DC-AC inverter.

Claims 21 and 26 have been amended to make clear that each power inverter includes a single DC-AC inverter and at least two DC-AC power input ports are coupled to the single DC-AC inverter of that power inverter. This approach reduces the electrical components needed and reduces cost.

Aoki fails to teach or suggest multiple DC input ports coupled to a single DC-AC inverter or the advantages thereof. Therefore, Aoki fails to render obvious Claims 21 through 23 and 26 through 30.

The application has been amended to place the application condition for allowance. All amendments are supported by the specification. An early notice of allowance is earnestly solicited.

Please charge any shortage in the fees or credit any overpayment to Deposit Account No. 50-3266.

Respectfully submitted,

DLA PIPER LLP US

/Dale S. Lazar/

Dale S. Lazar
Registration No. 28,872
Attorney for Applicant

DSL/amd
PO Box 2758
Reston, VA 20195
(703) 773.4000 Telephone
(703) 773.5200 Fax

Electronic Acknowledgement Receipt

EFS ID:	17848921
Application Number:	12837162
International Application Number:	
Confirmation Number:	3679
Title of Invention:	SMART AND SCALABLE POWER INVERTERS
First Named Inventor/Applicant Name:	George Shu-Xing CHENG
Customer Number:	47604
Filer:	Dale S. Lazar/Ava M. Dixon
Filer Authorized By:	Dale S. Lazar
Attorney Docket Number:	350809-000003
Receipt Date:	08-JAN-2014
Filing Date:	15-JUL-2010
Time Stamp:	19:24:22
Application Type:	Utility under 35 USC 111(a)

Payment information:

Submitted with Payment	no

File Listing:

Document Number	Document Description	File Name	File Size(Bytes)/ Message Digest	Multi Part /.zip	Pages (if appl.)
1	After Final Consideration Program Request	350809-0000033_AFCPForm.pdf	226745 465dfe66618445d05347c3ed5a2759d60acac094	no	2

Warnings:

Information:

2		350809-000003_AmendmentAfterFinal.pdf	98363 b15eb322933e6e72491a1c695616907acae8e5da	yes	16

	Multipart Description/PDF files in .zip description		
	Document Description	**Start**	**End**
	Response After Final Action	1	1
	Claims	2	14
	Applicant Arguments/Remarks Made in an Amendment	15	16

Warnings:	
Information:	
Total Files Size (in bytes):	325108

This Acknowledgement Receipt evidences receipt on the noted date by the USPTO of the indicated documents, characterized by the applicant, and including page counts, where applicable. It serves as evidence of receipt similar to a Post Card, as described in MPEP 503.

New Applications Under 35 U.S.C. 111
If a new application is being filed and the application includes the necessary components for a filing date (see 37 CFR 1.53(b)-(d) and MPEP 506), a Filing Receipt (37 CFR 1.54) will be issued in due course and the date shown on this Acknowledgement Receipt will establish the filing date of the application.

National Stage of an International Application under 35 U.S.C. 371
If a timely submission to enter the national stage of an international application is compliant with the conditions of 35 U.S.C. 371 and other applicable requirements a Form PCT/DO/EO/903 indicating acceptance of the application as a national stage submission under 35 U.S.C. 371 will be issued in addition to the Filing Receipt, in due course.

New International Application Filed with the USPTO as a Receiving Office
If a new international application is being filed and the international application includes the necessary components for an international filing date (see PCT Article 11 and MPEP 1810), a Notification of the International Application Number and of the International Filing Date (Form PCT/RO/105) will be issued in due course, subject to prescriptions concerning national security, and the date shown on this Acknowledgement Receipt will establish the international filing date of the application.

PTO/SB/06 (09-11)
Approved for use through 1/31/2014. OMB 0651-0032
U.S. Patent and Trademark Office; U.S. DEPARTMENT OF COMMERCE
Under the Paperwork Reduction Act of 1995, no persons are required to respond to a collection of information unless it displays a valid OMB control number.

PATENT APPLICATION FEE DETERMINATION RECORD Substitute for Form PTO-875	Application or Docket Number 12/837,162	Filing Date 07/15/2010	☐ To be Mailed

ENTITY: ☐ LARGE ☒ SMALL ☐ MICRO

APPLICATION AS FILED – PART I

FOR	(Column 1) NUMBER FILED	(Column 2) NUMBER EXTRA	RATE ($)	FEE ($)
☐ BASIC FEE (37 CFR 1.16(a), (b), or (c))	N/A	N/A	N/A	
☐ SEARCH FEE (37 CFR 1.16(k), (i), or (m))	N/A	N/A	N/A	
☐ EXAMINATION FEE (37 CFR 1.16(o), (p), or (q))	N/A	N/A	N/A	
TOTAL CLAIMS (37 CFR 1.16(i))	30 minus 20 =	* 10	x $26 =	**260**
INDEPENDENT CLAIMS (37 CFR 1.16(h))	7 minus 3 =	* 4	x $110 =	**440**
☐ APPLICATION SIZE FEE (37 CFR 1.16(s))	If the specification and drawings exceed 100 sheets of paper, the application size fee due is $310 ($155 for small entity) for each additional 50 sheets or fraction thereof. See 35 U.S.C. 41(a)(1)(G) and 37 CFR 1.16(s).			
☐ MULTIPLE DEPENDENT CLAIM PRESENT (37 CFR 1.16(j))				
* If the difference in column 1 is less than zero, enter "0" in column 2.			TOTAL	**700**

APPLICATION AS AMENDED – PART II

AMENDMENT	**01/08/2014**	(Column 1) CLAIMS REMAINING AFTER AMENDMENT		(Column 2) HIGHEST NUMBER PREVIOUSLY PAID FOR	(Column 3) PRESENT EXTRA	RATE ($)	ADDITIONAL FEE ($)
	Total (37 CFR 1.16(i))	* 32	Minus	** 32	= 0	x $40 =	0
	Independent (37 CFR 1.16(h))	* 7	Minus	***7	= 0	x $210 =	0
	☐ Application Size Fee (37 CFR 1.16(s))						
	☐ FIRST PRESENTATION OF MULTIPLE DEPENDENT CLAIM (37 CFR 1.16(j))						
						TOTAL ADD'L FEE	**0**

AMENDMENT		(Column 1) CLAIMS REMAINING AFTER AMENDMENT		(Column 2) HIGHEST NUMBER PREVIOUSLY PAID FOR	(Column 3) PRESENT EXTRA	RATE ($)	ADDITIONAL FEE ($)
	Total (37 CFR 1.16(i))	*	Minus	**	=	x $ =	
	Independent (37 CFR 1.16(h))	*	Minus	***	=	x $ =	
	☐ Application Size Fee (37 CFR 1.16(s))						
	☐ FIRST PRESENTATION OF MULTIPLE DEPENDENT CLAIM (37 CFR 1.16(j))						
						TOTAL ADD'L FEE	

* If the entry in column 1 is less than the entry in column 2, write "0" in column 3.
** If the "Highest Number Previously Paid For" IN THIS SPACE is less than 20, enter "20".
*** If the "Highest Number Previously Paid For" IN THIS SPACE is less than 3, enter "3".
The "Highest Number Previously Paid For" (Total or Independent) is the highest number found in the appropriate box in column 1.

LIE
/GERALDINE STANLEY/

This collection of information is required by 37 CFR 1.16. The information is required to obtain or retain a benefit by the public which is to file (and by the USPTO to process) an application. Confidentiality is governed by 35 U.S.C. 122 and 37 CFR 1.14. This collection is estimated to take 12 minutes to complete, including gathering, preparing, and submitting the completed application form to the USPTO. Time will vary depending upon the individual case. Any comments on the amount of time you require to complete this form and/or suggestions for reducing this burden, should be sent to the Chief Information Officer, U.S. Patent and Trademark Office, U.S. Department of Commerce, P.O. Box 1450, Alexandria, VA 22313-1450. DO NOT SEND FEES OR COMPLETED FORMS TO THIS ADDRESS. **SEND TO: Commissioner for Patents, P.O. Box 1450, Alexandria, VA 22313-1450.**
If you need assistance in completing the form, call 1-800-PTO-9199 and select option 2.

UNITED STATES PATENT AND TRADEMARK OFFICE

UNITED STATES DEPARTMENT OF COMMERCE
United States Patent and Trademark Office
Address: COMMISSIONER FOR PATENTS
P.O. Box 1450
Alexandria, Virginia 22313-1450
www.uspto.gov

APPLICATION NO.	FILING DATE	FIRST NAMED INVENTOR	ATTORNEY DOCKET NO.	CONFIRMATION NO.
12/837,162	07/15/2010	George Shu-Xing CHENG	350809-000003	3679

47604 7590 11/27/2013
DLA PIPER LLP US
P. O. BOX 2758
RESTON, VA 20195

EXAMINER
CAVALLARI, DANIEL J

ART UNIT	PAPER NUMBER
2836	

NOTIFICATION DATE	DELIVERY MODE
11/27/2013	ELECTRONIC

Please find below and/or attached an Office communication concerning this application or proceeding.

The time period for reply, if any, is set in the attached communication.

Notice of the Office communication was sent electronically on above-indicated "Notification Date" to the following e-mail address(es):

PatentProsecutionRes@dlapiper.com

Office Action Summary	Application No. 12/837,162	Applicant(s) CHENG ET AL.	
	Examiner DANIEL CAVALLARI	Art Unit 2836	AIA (First Inventor to File) Status No

-- The MAILING DATE of this communication appears on the cover sheet with the correspondence address --

Period for Reply

A SHORTENED STATUTORY PERIOD FOR REPLY IS SET TO EXPIRE 3 MONTH(S) OR THIRTY (30) DAYS, WHICHEVER IS LONGER, FROM THE MAILING DATE OF THIS COMMUNICATION.

- Extensions of time may be available under the provisions of 37 CFR 1.136(a). In no event, however, may a reply be timely filed after SIX (6) MONTHS from the mailing date of this communication.
- If NO period for reply is specified above, the maximum statutory period will apply and will expire SIX (6) MONTHS from the mailing date of this communication.
- Failure to reply within the set or extended period for reply will, by statute, cause the application to become ABANDONED (35 U.S.C. § 133). Any reply received by the Office later than three months after the mailing date of this communication, even if timely filed, may reduce any earned patent term adjustment. See 37 CFR 1.704(b).

Status

1)☒ Responsive to communication(s) filed on *6/12/2013*.

☐ A declaration(s)/affidavit(s) under **37 CFR 1.130(b)** was/were filed on _____.

2a)☒ This action is **FINAL**. 2b)☐ This action is non-final.

3)☐ An election was made by the applicant in response to a restriction requirement set forth during the interview on _____; the restriction requirement and election have been incorporated into this action.

4)☐ Since this application is in condition for allowance except for formal matters, prosecution as to the merits is closed in accordance with the practice under *Ex parte Quayle*, 1935 C.D. 11, 453 O.G. 213.

Disposition of Claims

5)☒ Claim(s) *1-30* is/are pending in the application.

5a) Of the above claim(s) *13-20* is/are withdrawn from consideration.

6)☒ Claim(s) *1-12,24 and 25* is/are allowed.

7)☒ Claim(s) *21-23 and 26-30* is/are rejected.

8)☐ Claim(s) _____ is/are objected to.

9)☐ Claim(s) _____ are subject to restriction and/or election requirement.

* If any claims have been determined allowable, you may be eligible to benefit from the **Patent Prosecution Highway** program at a participating intellectual property office for the corresponding application. For more information, please see http://www.uspto.gov/patents/init_events/pph/index.jsp or send an inquiry to PPHfeedback@uspto.gov.

Application Papers

10)☐ The specification is objected to by the Examiner.

11)☐ The drawing(s) filed on _____ is/are: a)☐ accepted or b)☐ objected to by the Examiner.

Applicant may not request that any objection to the drawing(s) be held in abeyance. See 37 CFR 1.85(a).

Replacement drawing sheet(s) including the correction is required if the drawing(s) is objected to. See 37 CFR 1.121(d).

Priority under 35 U.S.C. § 119

12)☐ Acknowledgment is made of a claim for foreign priority under 35 U.S.C. § 119(a)-(d) or (f).

Certified copies:

a)☐ All b)☐ Some * c)☐ None of the:

1.☐ Certified copies of the priority documents have been received.

2.☐ Certified copies of the priority documents have been received in Application No. _____.

3.☐ Copies of the certified copies of the priority documents have been received in this National Stage application from the International Bureau (PCT Rule 17.2(a)).

* See the attached detailed Office action for a list of the certified copies not received.

Attachment(s)

1) ☐ Notice of References Cited (PTO-892)

2) ☐ Information Disclosure Statement(s) (PTO/SB/08) Paper No(s)/Mail Date _____.

3) ☐ Interview Summary (PTO-413) Paper No(s)/Mail Date. _____ .

4) ☐ Other: _____.

The present application is being examined under the pre-AIA first to invent provisions.

DETAILED ACTION

Response to Arguments

Applicant's arguments with respect to the claims have been considered but are moot because the arguments do not apply to any of the references being used in the current rejection. It is noted that although the reference of Aoki is used again, it is used in a different manner, as necessitated by Applicant's amendments. More specifically, Aoki teaches an inverter with two DC power input ports, wherein the inverter is read on by the combination of 100 and 200, thereby having two input ports of the two FCs (see fig4). The respectively connected inverters likewise comprising the combination of 300 and 400, etc.

Claim Rejections - 35 USC § 103

The following is a quotation of 35 U.S.C. 103(a) which forms the basis for all obviousness rejections set forth in this Office action:

> (a) A patent may not be obtained though the invention is not identically disclosed or described as set forth in section 102 of this title, if the differences between the subject matter sought to be patented and the prior art are such that the subject matter as a whole would have been obvious at the time the invention was made to a person having ordinary skill in the art to which said subject matter pertains. Patentability shall not be negatived by the manner in which the invention was made.

Claims 21-23 and 26-30 are rejected under 35 U.S.C. 103(a) as being unpatentable over Aoki et al. ("Aoki") JP 09275637A.

In regard to claims 21, 26, and 29

Aoki teaches:

A scalable DC to AC power inversion system for providing AC power to a power grid from a plurality of individual DC power sources each having a DC power output port, comprising:

a) a plurality of power inverters (read on by the combination of pairs, ie 100 and 200; 300 and 400, etc. etc.), each of said power inverters having at least one DC power input port (ie. input to FC of 100 and 200, fig1), an AC power input port (ie respective input ports 333, fig1), and an AC power output port (ie respective output ports 134, fig1), each of said DC power input ports having one DC power source connected thereto (read on by each respective FC);

b) said AC power output port of each inverter being connected in a daisy chain to the AC power input port of the next inverter (read on by both the physical connection (ie "input to output") and also the daisy-chain master/slave configuration, see Abstract, provide translation) except for the AC power input port of the first inverter being left open (see open input of first/top inverter)

c) whereby said system is incrementally scalable by adding or subtracting DC power sources and daisy-chained inverters (See fig1).

Aoki fails to teach and the AC power output port of the last inverter being connected to a power service panel of the power grid and providing power to the grid (noting Aoki does not particular teach what the high power scalable inverter inversion system output is attached to);

Official Notice is taken that both the concept and advantages of providing a power service panel connection from a supplemental utility grid co-generation system and providing power to the utility grid are well known and expected in the art. It would have been obvious to

have included the power service panel in Aoki as these panels are known to provide known and desirable power connections from a co-generation system for use on the utility grid.

In regard to claims 22, 23, 27, 28

Aoki fails to teach the number of phases used in the inverter system.

Official Notice is taken that both the concept and advantages of providing for single or three phases power in power inversion systems are well known and expected in the art. It would have been obvious to have included the desirable number of phases (single or three) in Aoki's inverter system as the number of phases are known to be readily chosen depending on the needs of the connected grid/load.

In regard to claim 30

Aoki further teaches:

The method of claim 26 where the providing of AC power includes producing a total AC power that is the summation of the AC power supplied by each said inverter (read on by the parallel inverter operation, see provided translation Abstract).

Allowable Subject Matter

Claims 1-12 and 24-25 are allowed.

Conclusion

Applicant's amendment necessitated the new ground(s) of rejection presented in this Office action. Accordingly, **THIS ACTION IS MADE FINAL**. See MPEP § 706.07(a). Applicant is reminded of the extension of time policy as set forth in 37 CFR 1.136(a).

A shortened statutory period for reply to this final action is set to expire THREE MONTHS from the mailing date of this action. In the event a first reply is filed within TWO MONTHS of the mailing date of this final action and the advisory action is not mailed until after the end of the THREE-MONTH shortened statutory period, then the shortened statutory period will expire on the date the advisory action is mailed, and any extension fee pursuant to 37 CFR 1.136(a) will be calculated from the mailing date of the advisory action. In no event, however, will the statutory period for reply expire later than SIX MONTHS from the date of this final action.

Any inquiry concerning this communication or earlier communications from the examiner should be directed to Daniel Cavallari whose telephone number is 571-272-8541. The examiner can normally be reached on Monday-Friday 10:00am-6:30pm.

If attempts to reach the examiner by telephone are unsuccessful, the examiner's supervisor, Jared Fureman can be reached at (571)272-2391. The fax phone number for the organization where this application or proceeding is assigned is 571-273-8300.

Information regarding the status of an application may be obtained from the Patent Application Information Retrieval (PAIR) system. Status information for published applications may be obtained from either Private PAIR or Public PAIR. Status information for unpublished applications is available through Private PAIR only. For more information about the PAIR system, see http://pair-direct.uspto.gov. Should you have questions on access to the Private PAIR system, contact the Electronic Business Center (EBC) at 866-217-9197 (toll-free). If you would like assistance from a USPTO Customer Service Representative or access to the automated information system, call 800-786-9199 (IN USA OR CANADA) or 571-272-1000.

/Daniel Cavallari/

PRIMARY PATENT EXAMINER
ART UNIT 2836

UNITED STATES PATENT AND TRADEMARK OFFICE

UNITED STATES DEPARTMENT OF COMMERCE
United States Patent and Trademark Office
Address: COMMISSIONER FOR PATENTS
P.O. Box 1450
Alexandria, Virginia 22313-1450
www.uspto.gov

APPLICATION NO.	FILING DATE	FIRST NAMED INVENTOR	ATTORNEY DOCKET NO.	CONFIRMATION NO.
12/837,162	07/15/2010	George Shu-Xing CHENG	350809-000003	3679

47604 7590 08/22/2013
DLA PIPER LLP US
P. O. BOX 2758
RESTON, VA 20195

EXAMINER
CAVALLARI, DANIEL J

ART UNIT	PAPER NUMBER
2836	

NOTIFICATION DATE	DELIVERY MODE
08/22/2013	ELECTRONIC

Please find below and/or attached an Office communication concerning this application or proceeding.

The time period for reply, if any, is set in the attached communication.

Notice of the Office communication was sent electronically on above-indicated "Notification Date" to the following e-mail address(es):

PatentProsecutionRes@dlapiper.com

Applicant-Initiated Interview Summary	Application No.	Applicant(s)	
	12/837,162	CHENG ET AL.	
	Examiner	Art Unit	
	DANIEL CAVALLARI	2836	

All participants (applicant, applicant's representative, PTO personnel):

(1) *DANIEL CAVALLARI*. (3)_____.

(2) *DALE LAZAR*. (4)_____.

Date of Interview: *14 August 2013*.

Type: ☒ Telephonic ☐ Video Conference
☐ Personal [copy given to: ☐ applicant ☐ applicant's representative]

Exhibit shown or demonstration conducted: ☐ Yes ☒ No.
If Yes, brief description: _____.

Issues Discussed ☐101 ☒112 ☐102 ☒103 ☐Others
(For each of the checked box(es) above, please describe below the issue and detailed description of the discussion)

Claim(s) discussed: *21-23 and 26-30*.

Identification of prior art discussed: *JP09275637A*.

Substance of Interview
(For each issue discussed, provide a detailed description and indicate if agreement was reached. Some topics may include: identification or clarification of a reference or a portion thereof, claim interpretation, proposed amendments, arguments of any applied references etc...)

Applicant presented proposed claim amendments. The amendments appear to overcome both the previously made 112 rejection as well as the art rejection over JP09275637A.

Applicant recordation instructions: The formal written reply to the last Office action must include the substance of the interview. (See MPEP section 713.04). If a reply to the last Office action has already been filed, applicant is given a non-extendable period of the longer of one month or thirty days from this interview date, or the mailing date of this interview summary form, whichever is later, to file a statement of the substance of the interview

Examiner recordation instructions: Examiners must summarize the substance of any interview of record. A complete and proper recordation of the substance of an interview should include the items listed in MPEP 713.04 for complete and proper recordation including the identification of the general thrust of each argument or issue discussed, a general indication of any other pertinent matters discussed regarding patentability and the general results or outcome of the interview, to include an indication as to whether or not agreement was reached on the issues raised.

☐ Attachment

/Daniel Cavallari/
Primary Examiner, Art Unit 2836

Summary of Record of Interview Requirements

Manual of Patent Examining Procedure (MPEP), Section 713.04, Substance of Interview Must be Made of Record
A complete written statement as to the substance of any face-to-face, video conference, or telephone interview with regard to an application must be made of record in the application whether or not an agreement with the examiner was reached at the interview.

Title 37 Code of Federal Regulations (CFR) § 1.133 Interviews
Paragraph (b)

In every instance where reconsideration is requested in view of an interview with an examiner, a complete written statement of the reasons presented at the interview as warranting favorable action must be filed by the applicant. An interview does not remove the necessity for reply to Office action as specified in §§ 1.111, 1.135. (35 U.S.C. 132)

37 CFR §1.2 Business to be transacted in writing.
All business with the Patent or Trademark Office should be transacted in writing. The personal attendance of applicants or their attorneys or agents at the Patent and Trademark Office is unnecessary. The action of the Patent and Trademark Office will be based exclusively on the written record in the Office. No attention will be paid to any alleged oral promise, stipulation, or understanding in relation to which there is disagreement or doubt.

The action of the Patent and Trademark Office cannot be based exclusively on the written record in the Office if that record is itself incomplete through the failure to record the substance of interviews.

It is the responsibility of the applicant or the attorney or agent to make the substance of an interview of record in the application file, unless the examiner indicates he or she will do so. It is the examiner's responsibility to see that such a record is made and to correct material inaccuracies which bear directly on the question of patentability.

Examiners must complete an Interview Summary Form for each interview held where a matter of substance has been discussed during the interview by checking the appropriate boxes and filling in the blanks. Discussions regarding only procedural matters, directed solely to restriction requirements for which interview recordation is otherwise provided for in Section 812.01 of the Manual of Patent Examining Procedure, or pointing out typographical errors or unreadable script in Office actions or the like, are excluded from the interview recordation procedures below. Where the substance of an interview is completely recorded in an Examiners Amendment, no separate Interview Summary Record is required.

The Interview Summary Form shall be given an appropriate Paper No., placed in the right hand portion of the file, and listed on the "Contents" section of the file wrapper. In a personal interview, a duplicate of the Form is given to the applicant (or attorney or agent) at the conclusion of the interview. In the case of a telephone or video-conference interview, the copy is mailed to the applicant's correspondence address either with or prior to the next official communication. If additional correspondence from the examiner is not likely before an allowance or if other circumstances dictate, the Form should be mailed promptly after the interview rather than with the next official communication.

The Form provides for recordation of the following information:
- Application Number (Series Code and Serial Number)
- Name of applicant
- Name of examiner
- Date of interview
- Type of interview (telephonic, video-conference, or personal)
- Name of participant(s) (applicant, attorney or agent, examiner, other PTO personnel, etc.)
- An indication whether or not an exhibit was shown or a demonstration conducted
- An identification of the specific prior art discussed
- An indication whether an agreement was reached and if so, a description of the general nature of the agreement (may be by attachment of a copy of amendments or claims agreed as being allowable). Note: Agreement as to allowability is tentative and does not restrict further action by the examiner to the contrary.
- The signature of the examiner who conducted the interview (if Form is not an attachment to a signed Office action)

It is desirable that the examiner orally remind the applicant of his or her obligation to record the substance of the interview of each case. It should be noted, however, that the Interview Summary Form will not normally be considered a complete and proper recordation of the interview unless it includes, or is supplemented by the applicant or the examiner to include, all of the applicable items required below concerning the substance of the interview.

A complete and proper recordation of the substance of any interview should include at least the following applicable items:
1) A brief description of the nature of any exhibit shown or any demonstration conducted,
2) an identification of the claims discussed,
3) an identification of the specific prior art discussed,
4) an identification of the principal proposed amendments of a substantive nature discussed, unless these are already described on the Interview Summary Form completed by the Examiner,
5) a brief identification of the general thrust of the principal arguments presented to the examiner,
   (The identification of arguments need not be lengthy or elaborate. A verbatim or highly detailed description of the arguments is not required. The identification of the arguments is sufficient if the general nature or thrust of the principal arguments made to the examiner can be understood in the context of the application file. Of course, the applicant may desire to emphasize and fully describe those arguments which he or she feels were or might be persuasive to the examiner.)
6) a general indication of any other pertinent matters discussed, and
7) if appropriate, the general results or outcome of the interview unless already described in the Interview Summary Form completed by the examiner.

Examiners are expected to carefully review the applicant's record of the substance of an interview. If the record is not complete and accurate, the examiner will give the applicant an extendable one month time period to correct the record.

Examiner to Check for Accuracy

If the claims are allowable for other reasons of record, the examiner should send a letter setting forth the examiner's version of the statement attributed to him or her. If the record is complete and accurate, the examiner should place the indication, "Interview Record OK" on the paper recording the substance of the interview along with the date and the examiner's initials.

IN THE UNITED STATES PATENT AND TRADEMARK OFFICE

In Re Application of:	George Shu-Xing CHENG	Conf. No.:	3679
Application No.	12/837,162	Group Art Unit:	2836
Filed:	July 15, 2010	Examiner:	Daniel J. Cavallari
For:	SMART AND SCALABLE POWER INVERTERS		

AMENDMENT UNDER 37 C.F.R. 1.111

Commissioner for Patents
PO Box 1450
Alexandria, VA 22313-1450

August 15, 2013

Dear Commissioner:

This is in response to the Non-Final Office Action dated June 12, 2013, and having a period for response set to expire on September 12, 2013.

The following amendments and remarks are respectfully submitted. Reconsideration of the claims is respectfully requested.

Amendments to the Claims begin on page 2 of this paper.

Remarks/Arguments begin on page 14 of this paper.

Amendments to the Claims:

This listing of claims will replace all prior versions, and listings, of claims in the application. Currently amended claims are shown with additions underlined and deletions in ~~strikethrough text~~ except double brackets may be placed before and after the deleted characters to show deletion of five or fewer characters.

1. (Original) A system for providing AC power to a power grid from a plurality of individual DC power sources each having a DC power output port, comprising:

a) a plurality of power inverters, each of said power inverters having one DC power input port, an AC power input port, and an AC power output port, said DC power input port having one DC power source connected thereto;

b) said AC power output port of each inverter being connected in a daisy chain to the AC power input port of the next inverter, except for the AC power input port of the first inverter being left open, and the AC power output port of the last inverter being connected to a power service panel of the power grid;

c) each of said power inverters including:

i) a DC-DC boost converter connected to said DC power source and arranged to convert the power source voltage to a higher DC voltage suitable for inversion;

ii) a DC-AC inverter connected to said DC-DC boost converter and arranged to invert the DC power to AC power with voltage higher than the incoming AC power voltage;

iii) an internal AC powerline that combines the generated AC power with the external AC power from the power grid;

iv) a load interface circuit connected to said DC-AC inverter and to said internal AC powerline, said load interface circuit being arranged to filter high-frequency components out of the said DC-AC inverter's AC output;

v) an MFA microcontroller connected to said DC-DC boost converter, DC-AC inverter, and load interface circuit, said microcontroller arranged to monitor the DC boost voltage, control the DC-DC boost converter, perform maximum power point tracking (MPPT), perform DC-AC inversion and AC power synchronization, monitor AC current and voltage for generated power amount and status, perform powerline communications, and perform logic controls such as AC powerline switching and isolation;

vi) a powerline modem connected to said microcontroller and said internal AC powerline through an interface circuitry for transmitting and receiving performance data between said microcontroller and said power grid;

vii) a line sensing circuit connected to said internal AC powerline and said microcontroller for detecting the phase and zero-crossing point of the incoming AC power from the power grid; and

viii) a solid state switch connected to said internal AC powerline and external AC powerline, and arranged to disconnect said internal AC powerline from the AC grid during the non-generation time.

2. (Original) The system of Claim 1, in which the output of each of said power inverters is single-phase AC.

3. (Original) The system of Claim 1, in which the output of each of said power inverters is three-phase AC.

4. (Original) The system of Claim 1, in which said MFA microcontroller includes Model-Free Adaptive (MFA) controllers which control the DC-DC boost converter, and MFA optimizers which provide maximum power point tracking (MPPT) to allow the power inverter to achieve optimal power production.

5. (Original) A system for providing AC power to a power grid from a plurality of individual DC power sources each having a DC power output port, comprising:

a) a plurality of power inverters, each of said power inverters having two DC power input ports, an AC power input port, and an AC power output port, each of said DC power input ports having one DC power source connected thereto;

b) aid AC power output port of each inverter being connected in a daisy chain to the AC power input port of the next inverter, except for the AC power input port of the first inverter being left open, and the AC power output port of the last inverter being connected to a power service panel of the power grid;

c) each of said power inverters including:

i) a pair of DC-DC boost converters, one connected to each of said DC power sources, respectively, and arranged to convert the power source voltage to a higher DC voltage suitable for inversion;

ii) a DC power combiner connected to said DC-DC boost converters for combining the DC output from both DC-DC boost converters and allowing said DC-DC boost converters to connect in parallel so that all DC currents are added together;

iii) a DC-AC inverter connected to said DC power combiner and arranged to invert the DC power to AC power with voltage higher than the incoming AC power voltage;

iv) an internal AC powerline that combines the generated AC power with the external AC power from the power grid;

v) a load interface circuit connected to said DC-AC inverter and to said internal AC powerline, said load interface circuit being arranged to filter high-frequency components out of the said DC-AC inverter's AC output;

vi) an MFA microcontroller connected to said DC-DC boost converters, DC-AC inverter, and load interface circuit, said microcontroller arranged to monitor the DC boost voltage, control the DC-DC boost converter, perform maximum power point tracking (MPPT), perform DC-AC inversion and AC power synchronization, monitor AC current and voltage for generated power amount and status, perform powerline communications, and perform logic controls such as AC powerline switching and isolation;

vii) a powerline modem connected to said microcontroller and said internal AC powerline through an interface circuitry for transmitting and receiving performance data between said microcontroller and said power grid;

viii) a line sensing circuit connected to said internal AC powerline and said microcontroller for detecting the phase and zero-crossing point of the incoming AC power from the power grid; and

ix) a solid state switch connected to said internal AC powerline and external AC powerline, and arranged to disconnect said internal AC powerline from the AC grid during the non-generation time.

6. (Original) The system of Claim 5, in which the output of each of said power inverters is single-phase AC.

7. (Original) The system of Claim 5, in which the output of each of said power inverters is three-phase AC.

8. (Original) The system of Claim 5, in which said MFA microcontroller includes Model-Free Adaptive (MFA) controllers which control the DC-DC boost converters, and MFA optimizers which provide maximum power point tracking (MPPT) to allow the power inverter to achieve optimal power production.

9. (Original) A system for providing AC power to a power grid from a plurality of individual DC power sources each having a DC power output port, comprising:

a) a plurality of power inverters, each of said power inverters having m DC power input ports, where m is an integer greater than or equal to one, an AC power input port, and an AC power output port, each of said DC power input ports having one DC power source connected thereto;

b) said AC power output port of each inverter being connected in a daisy chain to the AC power input port of the next inverter, except for the AC power input port of the first inverter being left open, and the AC power output port of the last inverter being connected to a power service panel of the power grid;

c) each of said power inverters including:

i) m number of DC-DC boost converters, one connected to each of said DC power sources, respectively, and arranged to convert the power source voltage to a higher DC voltage suitable for inversion;

ii) a DC power combiner connected to said m number of DC-DC boost converters for combining the DC output from all DC-DC boost converters and allowing said DC-DC boost converters to connect in parallel so that all DC currents are added together;

iii) a DC-AC inverter connected to said DC power combiner and arranged to invert the DC power to AC power with voltage higher than the incoming AC power voltage;

iv) an internal AC powerline that combines the generated AC power with the external AC power from the power grid;

v) a load interface circuit connected to said DC-AC inverter and to said internal AC powerline, said load interface circuit being arranged to filter high-frequency components out of the said DC-AC inverter's AC output;

vi) an MFA microcontroller connected to said DC-DC boost converters, DC-AC inverter, and load interface circuit, said microcontroller arranged to monitor the DC boost voltage, control the DC-DC boost converter, perform maximum power point tracking (MPPT), perform DC-AC inversion and AC power synchronization, monitor AC current and voltage for generated power amount and status, perform powerline communications, and perform logic controls such as AC powerline switching and isolation;

vii) a powerline modem connected to said microcontroller and said internal AC powerline through an interface circuitry for transmitting and receiving performance data between said microcontroller and said power grid;

viii) a line sensing circuit connected to said internal AC powerline and said microcontroller for detecting the phase and zero-crossing point of the incoming AC power from the power grid; and

ix) a solid state switch connected to said internal AC powerline and external AC powerline, and arranged to disconnect said internal AC powerline from the AC grid during the non-generation time.

10. (Original) The system of Claim 9, in which the output of each of said power inverters is single-phase AC.

11. (Original) The system of Claim 9, in which the output of each of said power inverters is three-phase AC.

12. (Original) The system of Claim 9, in which said MFA microcontroller includes Model-Free Adaptive (MFA) controllers which control the DC-DC boost converters, and MFA optimizers which provide maximum power point tracking (MPPT) to allow the power inverter to achieve optimal power production.

13. (Withdrawn) A DC- to-AC power inverter, comprising:

a) one DC power input port having one DC power source connected thereto;

b) one AC power output port arranged to supply AC power to the AC power grid;

c) a DC-DC boost converter connected to said DC power source and arranged to convert the power source voltage to a higher DC voltage suitable for inversion;

d) a DC-AC inverter connected to said DC-DC boost converter and arranged to invert the DC power to AC power with voltage higher than the incoming AC power voltage;

e) an internal AC powerline that combines the generated AC power with the external AC power from the AC power grid;

f) a load interface circuit connected to said DC-AC inverter and to said internal AC powerline, said load interface circuit being arranged to filter high-frequency components out of the said DC-AC inverter's AC output;

g) an MFA microcontroller connected to said DC-DC boost converter, DC-AC inverter, and load interface circuit, said microcontroller arranged to monitor the DC boost voltage, control the DC-DC boost converter, perform maximum power point tracking (MPPT), perform DC-AC inversion and AC power synchronization, monitor AC current and voltage for generated power amount and status, perform powerline communications, and perform logic controls such as AC powerline switching and isolation;

h) a powerline modem connected to said microcontroller and said internal AC powerline through an interface circuitry for transmitting and receiving performance data between said microcontroller and said power grid;

i) a line sensing circuit connected to said internal AC powerline and said microcontroller for detecting the phase and zero-crossing point of the incoming AC power from the power grid; and

j) a solid state switch connected to said internal AC powerline and external AC powerline, and arranged to disconnect said internal AC powerline from the AC grid during the non-generation time.

14. (Withdrawn) The inverter of Claim 13, in which the output of said inverter is single-phase AC.

15. (Withdrawn) The inverter of Claim 13, in which the output of said inverter is three-phase AC.

16. (Withdrawn) The inverter of Claim 13, in which said MFA microcontroller includes Model-Free Adaptive (MFA) controllers which control the DC-DC boost converter, and MFA optimizers which provide maximum power point tracking (MPPT) to allow the power inverter to achieve optimal power production.

17. (Withdrawn) A DC- to-AC power inverter, comprising:

a) at least two DC power input ports, each of said DC power input ports having one DC power source connected thereto;

b) one AC power output port arranged to supply AC power to the AC power grid;

c) for each DC power source, a DC-DC boost converter connected to said DC power sources and arranged to convert the power source voltage to a higher DC voltage suitable for inversion;

d) a DC power combiner connected to said DC-DC boost converters for combining the DC output from all DC-DC boost converters and allowing the said DC-DC boost converters to connect in parallel so that all DC currents are added together;

e) a DC-AC inverter connected to said DC power combiner and arranged to invert the DC power to AC power with voltage higher than the incoming AC power voltage;

f) an internal AC powerline that combines the generated AC power with the external AC power from the power grid;

g) a load interface circuit connected to said DC-AC inverter and to said internal AC powerline, said load interface circuit being arranged to filter high-frequency components out of the said DC-AC inverter's AC output;

h) an MFA microcontroller connected to said DC-DC boost converters, DC-AC inverter, and load interface circuit, said microcontroller arranged to monitor the DC boost voltage, control the DC-DC boost converter, perform maximum power point tracking (MPPT), perform DC-AC inversion and AC power synchronization, monitor AC current and voltage for generated power amount and status, perform powerline communications, and perform logic controls such as AC powerline switching and isolation;

i) a powerline modem connected to said microcontroller and said internal AC powerline through an interface circuitry for transmitting and receiving performance data between said microcontroller and said power grid;

j) a line sensing circuit connected to said internal AC powerline and said microcontroller for detecting the phase and zero-crossing point of the incoming AC power from the power grid; and

k) a solid state switch connected to said internal AC powerline and external AC powerline, and arranged to disconnect said internal AC powerline from the AC grid during the non-generation time.

18. (Withdrawn) The inverter of Claim 17, in which the output of said inverter is single-phase AC.

19. (Withdrawn) The inverter of Claim 17, in which the output of said inverter is three-phase AC.

20. (Withdrawn) The inverter of Claim 17, in which said MFA microcontroller includes Model-Free Adaptive (MFA) controllers which control the DC-DC boost converters, and MFA optimizers which provide maximum power point tracking (MPPT) to allow the power inverter to achieve optimal power production.

21. (Currently Amended) A scalable DC to AC power inversion system for providing AC power to a power grid from a plurality of individual DC power sources each having a DC power output port, comprising:

a) a plurality of power inverters, each of said power inverters having at least [[one]] <u>two</u> DC power input [[port]] <u>ports</u>, an AC power input port, and an AC power output port, each of said DC power input ports having one DC power source connected thereto;

b) said AC power output port of each inverter being connected in a daisy chain to the AC power input port of the next inverter, except for the AC power input port of the first inverter being left open, and the AC power output port of the last inverter being connected to a power service panel of the power grid;

c) whereby said system is incrementally scalable by adding or subtracting DC power sources and daisy-chained inverters~~; and~~

~~d) whereby an optimal amount of AC power is generated and supplied to said power grid regardless of the performance of any individual power source~~.

22. (Original) The system of Claim 21, in which the output of each of said power inverters is single-phase AC.

23. (Original) The system of Claim 21, in which the output of each of said power inverters is three-phase AC.

24. (Previously Presented) The system of Claim 9, in which the said MFA microcontroller is programmed with a main program to iteratively:

a) turn on and off the inverter's generation circuit based on the DC power source input and conditions of the inverter and AC powerline,

b) calculate the inverter's power statistics such as the amount of power generated during a certain period of time;

c) perform diagnostics for the inverter's status and operation;

d) set the inverter's unit address;

e) perform powerline communications; and

f) respond to queries from data gathering or acquisition devices to report the power statistics.

25. (Original) The system of Claim 24, in which said MFA microcontroller is further programmed with an interrupt service routine (ISR) to:

a) respond to an interrupt;

b) save the current context of the main program;

c) read voltage and current signals from the DC source, DC-DC boost converter, and DC-AC inverter;

d) read phase and zero-crossing point data of the AC powerline;

e) perform maximum power point tracking (MPPT) for each DC power source connected to the inverter;

f) perform DC-AC inversion and AC synchronization;

g) send out PWM control signals through the digital output ports; and

h) restore the saved context of the main program so that the execution of the main program can be resumed.

26. (Currently Amended) A method of making a DC to AC power conversion system incrementally scalable, comprising:

a) providing a plurality of DC power sources and a plurality of DC to AC power inverters, said inverters each having an AC input port, an AC output port, and at least [[one]] two DC input [[port]] ports;

b) connecting at least one of said DC power sources, respectively, to at least one of said DC input ports; and

c) providing AC power to the power grid.

27. (Original) The method of Claim 26, in which the output of each of said power inverters is single-phase AC.

28. (Original) The method of Claim 26, in which the output of each of said power inverters is three-phase AC.

29. (Previously Presented) The method of claim 26 further comprising daisy-chaining at least two of said inverters, said AC power output port of each inverter being connected in a daisy chain to the AC power input port of the next inverter, except for the AC power input port of the first inverter being left open, and the AC power output port of the last inverter being connected to a power service panel of the power grid.

30. (Previously Presented) The method of claim 26 where the providing of AC power includes producing a total AC power that is the summation of the AC power supplied by each said inverter.

31. (New) The system of claim 21 further comprising a first DC power source connected to one of said DC power input ports of one of said power inverters and a second DC power source, different in kind from said first DC power source, connected to another of said DC power input ports of said one power inverter.

32. (New) The method of claim 26 further comprising:

a) connecting a first DC power source to one of said DC power input ports of one of said power inverters; and

b) connecting a second DC power source, different in kind from said first DC power source, to another of said DC power input ports of said one power inverter.

Remarks/Arguments

The kindness and helpfulness of Examiner Cavallari during the interview of August 13, 2013 are acknowledged and greatly appreciated. The following arguments are based on the interview discussion.

Claims 2 [sic, 21?] – 23 stand rejected under Section 112 as being indefinite. No reasons are provided as to why claims 2-20 are indefinite. The last paragraph of claim 21 has been eliminated to obviate this rejection with regard to claims 21-23.

Claims 21-23 and 26-30 stand rejected as obvious over JP09275637 (first inventor Mr. Ishizawa) ("Ishizawa et al."). Claims 21 and 26 have been amended to obviate this rejection.

Claims 21 and 26 have been amended to recite that each of a plurality of power inverters has at least two DC power input ports. Thus, the power inverters of claims 21 and 26 are capable of accepting DC power from multiple sources.

Ishizawa et al. is directed to a system in which a number of fuel cells are operated in parallel. Although the system of Ishizawa et al. includes a plurality of power inverters, one power inverter is provided for each fuel cell. Nowhere in Ishizawa et al. is there any teaching or suggestion as to how a single power inverter might have multiple DC power input ports.

Since Ishizawa et al. fails to teach a system for providing AC power in which power inverters include multiple DC power input ports, Ishizawa et al. fails to render obvious independent claims 21 and 26. Claims 22-23 and 27-30, dependent on either claim 21 or 26, are patentable for the reasons discussed above with respect to claims 21 and 26.

The application has been amended to place the application condition for allowance. All amendments are supported by the specification. An early notice of allowance is earnestly solicited.

Please charge any shortage in the fees or credit any overpayment to Deposit Account No. 50-3266.

Respectfully submitted,

DLA PIPER LLP US

Dale S. Lazar
Registration No. 28,872
Attorney for Applicant

DSL/amd
PO Box 2758
Reston, VA 20195
(703) 773.4000 Telephone
(703) 773.5200 Fax

Electronic Patent Application Fee Transmittal

Application Number:	12837162
Filing Date:	15-Jul-2010
Title of Invention:	SMART AND SCALABLE POWER INVERTERS
First Named Inventor/Applicant Name:	George Shu-Xing CHENG
Filer:	Dale S. Lazar/Ava M. Dixon
Attorney Docket Number:	350809-000003

Filed as Small Entity

Utility under 35 USC 111(a) Filing Fees

Description	Fee Code	Quantity	Amount	Sub-Total in USD($)
Basic Filing:				
Pages:				
Claims:				
Claims in excess of 20	2202	2	40	80
Miscellaneous-Filing:				
Petition:				
Patent-Appeals-and-Interference:				
Post-Allowance-and-Post-Issuance:				
Extension-of-Time:				

Description	Fee Code	Quantity	Amount	Sub-Total in USD($)
Miscellaneous:				
		Total in USD ($)		**80**

Electronic Acknowledgement Receipt

EFS ID:	16595402
Application Number:	12837162
International Application Number:	
Confirmation Number:	3679
Title of Invention:	SMART AND SCALABLE POWER INVERTERS
First Named Inventor/Applicant Name:	George Shu-Xing CHENG
Customer Number:	47604
Filer:	Dale S. Lazar/Ava M. Dixon
Filer Authorized By:	Dale S. Lazar
Attorney Docket Number:	350809-000003
Receipt Date:	15-AUG-2013
Filing Date:	15-JUL-2010
Time Stamp:	14:06:12
Application Type:	Utility under 35 USC 111(a)

Payment information:

Submitted with Payment	yes
Payment Type	Credit Card
Payment was successfully received in RAM	$80
RAM confirmation Number	338
Deposit Account	
Authorized User	

File Listing:

Document Number	Document Description	File Name	File Size(Bytes)/ Message Digest	Multi Part /.zip	Pages (if appl.)

1		350809-000003_Amendment.pdf	5130157 56ecc4ee4495da37f5673696b6c6c6a8ae5766cf	yes	16

	Multipart Description/PDF files in .zip description		
	Document Description	**Start**	**End**
	Amendment/Req. Reconsideration-After Non-Final Reject	1	1
	Claims	2	13
	Applicant Arguments/Remarks Made in an Amendment	14	16

Warnings:

Information:

2	Fee Worksheet (SB06)	fee-info.pdf	30695 6df5d4b7561f151e46e658a90ffc8d26c58b710e	no	2

Warnings:

Information:

Total Files Size (in bytes):	5160852

This Acknowledgement Receipt evidences receipt on the noted date by the USPTO of the indicated documents, characterized by the applicant, and including page counts, where applicable. It serves as evidence of receipt similar to a Post Card, as described in MPEP 503.

<u>New Applications Under 35 U.S.C. 111</u>
If a new application is being filed and the application includes the necessary components for a filing date (see 37 CFR 1.53(b)-(d) and MPEP 506), a Filing Receipt (37 CFR 1.54) will be issued in due course and the date shown on this Acknowledgement Receipt will establish the filing date of the application.

<u>National Stage of an International Application under 35 U.S.C. 371</u>
If a timely submission to enter the national stage of an international application is compliant with the conditions of 35 U.S.C. 371 and other applicable requirements a Form PCT/DO/EO/903 indicating acceptance of the application as a national stage submission under 35 U.S.C. 371 will be issued in addition to the Filing Receipt, in due course.

<u>New International Application Filed with the USPTO as a Receiving Office</u>
If a new international application is being filed and the international application includes the necessary components for an international filing date (see PCT Article 11 and MPEP 1810), a Notification of the International Application Number and of the International Filing Date (Form PCT/RO/105) will be issued in due course, subject to prescriptions concerning national security, and the date shown on this Acknowledgement Receipt will establish the international filing date of the application.

PTO/SB/06 (09-11)
Approved for use through 1/31/2014. OMB 0651-0032
U.S. Patent and Trademark Office; U.S. DEPARTMENT OF COMMERCE
Under the Paperwork Reduction Act of 1995, no persons are required to respond to a collection of information unless it displays a valid OMB control number.

PATENT APPLICATION FEE DETERMINATION RECORD Substitute for Form PTO-875	Application or Docket Number 12/837,162	Filing Date 07/15/2010	☐ To be Mailed

ENTITY: ☐ LARGE ☒ SMALL ☐ MICRO

APPLICATION AS FILED – PART I

FOR	(Column 1) NUMBER FILED	(Column 2) NUMBER EXTRA	RATE ($)	FEE ($)
☐ BASIC FEE (37 CFR 1.16(a), (b), or (c))	N/A	N/A	N/A	
☐ SEARCH FEE (37 CFR 1.16(k), (i), or (m))	N/A	N/A	N/A	
☐ EXAMINATION FEE (37 CFR 1.16(o), (p), or (q))	N/A	N/A	N/A	
TOTAL CLAIMS (37 CFR 1.16(i))	minus 20 =	*	X $ =	
INDEPENDENT CLAIMS (37 CFR 1.16(h))	minus 3 =	*	X $ =	
☐ APPLICATION SIZE FEE (37 CFR 1.16(s))	If the specification and drawings exceed 100 sheets of paper, the application size fee due is $310 ($155 for small entity) for each additional 50 sheets or fraction thereof. See 35 U.S.C. 41(a)(1)(G) and 37 CFR 1.16(s).			
☐ MULTIPLE DEPENDENT CLAIM PRESENT (37 CFR 1.16(j))				
* If the difference in column 1 is less than zero, enter "0" in column 2.			TOTAL	

APPLICATION AS AMENDED – PART II

AMENDMENT	08/15/2013	(Column 1) CLAIMS REMAINING AFTER AMENDMENT		(Column 2) HIGHEST NUMBER PREVIOUSLY PAID FOR	(Column 3) PRESENT EXTRA	RATE ($)	ADDITIONAL FEE ($)
	Total (37 CFR 1.16(i))	* 32	Minus	** 30	= 2	X $40 =	80
	Independent (37 CFR 1.16(h))	* 7	Minus	***7	= 0	X $210 =	0
	☐ Application Size Fee (37 CFR 1.16(s))						
	☐ FIRST PRESENTATION OF MULTIPLE DEPENDENT CLAIM (37 CFR 1.16(j))						
						TOTAL ADD'L FEE	**80**

AMENDMENT		(Column 1) CLAIMS REMAINING AFTER AMENDMENT		(Column 2) HIGHEST NUMBER PREVIOUSLY PAID FOR	(Column 3) PRESENT EXTRA	RATE ($)	ADDITIONAL FEE ($)
	Total (37 CFR 1.16(i))	*	Minus	**	=	X $ =	
	Independent (37 CFR 1.16(h))	*	Minus	***	=	X $ =	
	☐ Application Size Fee (37 CFR 1.16(s))						
	☐ FIRST PRESENTATION OF MULTIPLE DEPENDENT CLAIM (37 CFR 1.16(j))						
						TOTAL ADD'L FEE	

* If the entry in column 1 is less than the entry in column 2, write "0" in column 3.
** If the "Highest Number Previously Paid For" IN THIS SPACE is less than 20, enter "20".
*** If the "Highest Number Previously Paid For" IN THIS SPACE is less than 3, enter "3".
The "Highest Number Previously Paid For" (Total or Independent) is the highest number found in the appropriate box in column 1.

LIE
/FLORENCE PATTERSON/

This collection of information is required by 37 CFR 1.16. The information is required to obtain or retain a benefit by the public which is to file (and by the USPTO to process) an application. Confidentiality is governed by 35 U.S.C. 122 and 37 CFR 1.14. This collection is estimated to take 12 minutes to complete, including gathering, preparing, and submitting the completed application form to the USPTO. Time will vary depending upon the individual case. Any comments on the amount of time you require to complete this form and/or suggestions for reducing this burden, should be sent to the Chief Information Officer, U.S. Patent and Trademark Office, U.S. Department of Commerce, P.O. Box 1450, Alexandria, VA 22313-1450. DO NOT SEND FEES OR COMPLETED FORMS TO THIS ADDRESS. **SEND TO: Commissioner for Patents, P.O. Box 1450, Alexandria, VA 22313-1450.**
If you need assistance in completing the form, call 1-800-PTO-9199 and select option 2.

UNITED STATES PATENT AND TRADEMARK OFFICE

UNITED STATES DEPARTMENT OF COMMERCE
United States Patent and Trademark Office
Address: COMMISSIONER FOR PATENTS
P.O. Box 1450
Alexandria, Virginia 22313-1450
www.uspto.gov

APPLICATION NO.	FILING DATE	FIRST NAMED INVENTOR	ATTORNEY DOCKET NO.	CONFIRMATION NO.
12/837,162	07/15/2010	George Shu-Xing CHENG	350809-000003	3679

47604 7590 06/12/2013
DLA PIPER LLP US
P. O. BOX 2758
RESTON, VA 20195

EXAMINER
CAVALLARI, DANIEL J

ART UNIT	PAPER NUMBER
2836	

NOTIFICATION DATE	DELIVERY MODE
06/12/2013	ELECTRONIC

Please find below and/or attached an Office communication concerning this application or proceeding.

The time period for reply, if any, is set in the attached communication.

Notice of the Office communication was sent electronically on above-indicated "Notification Date" to the following e-mail address(es):

PatentProsecutionRes@dlapiper.com

Office Action Summary	Application No. 12/837,162	Applicant(s) CHENG ET AL.	
	Examiner DANIEL CAVALLARI	Art Unit 2836	AIA (First Inventor to File) Status No

-- The MAILING DATE of this communication appears on the cover sheet with the correspondence address --

Period for Reply

A SHORTENED STATUTORY PERIOD FOR REPLY IS SET TO EXPIRE 3 MONTH(S) OR THIRTY (30) DAYS, WHICHEVER IS LONGER, FROM THE MAILING DATE OF THIS COMMUNICATION.

- Extensions of time may be available under the provisions of 37 CFR 1.136(a). In no event, however, may a reply be timely filed after SIX (6) MONTHS from the mailing date of this communication.
- If NO period for reply is specified above, the maximum statutory period will apply and will expire SIX (6) MONTHS from the mailing date of this communication.
- Failure to reply within the set or extended period for reply will, by statute, cause the application to become ABANDONED (35 U.S.C. § 133). Any reply received by the Office later than three months after the mailing date of this communication, even if timely filed, may reduce any earned patent term adjustment. See 37 CFR 1.704(b).

Status

1)☒ Responsive to communication(s) filed on *28 January 2013*.

☐ A declaration(s)/affidavit(s) under **37 CFR 1.130(b)** was/were filed on _____.

2a)☐ This action is **FINAL**. 2b)☒ This action is non-final.

3)☐ An election was made by the applicant in response to a restriction requirement set forth during the interview on _____; the restriction requirement and election have been incorporated into this action.

4)☐ Since this application is in condition for allowance except for formal matters, prosecution as to the merits is closed in accordance with the practice under *Ex parte Quayle*, 1935 C.D. 11, 453 O.G. 213.

Disposition of Claims

5)☒ Claim(s) *1-30* is/are pending in the application.

5a) Of the above claim(s) *13-20* is/are withdrawn from consideration.

6)☒ Claim(s) *1-12,24 and 25* is/are allowed.

7)☒ Claim(s) *21-23 and 26-30* is/are rejected.

8)☐ Claim(s) _____ is/are objected to.

9)☐ Claim(s) _____ are subject to restriction and/or election requirement.

* If any claims have been determined allowable, you may be eligible to benefit from the **Patent Prosecution Highway** program at a participating intellectual property office for the corresponding application. For more information, please see http://www.uspto.gov/patents/init_events/pph/index.jsp or send an inquiry to PPHfeedback@uspto.gov.

Application Papers

10)☐ The specification is objected to by the Examiner.

11)☒ The drawing(s) filed on *15 July 2010* is/are: a)☒ accepted or b)☐ objected to by the Examiner.

Applicant may not request that any objection to the drawing(s) be held in abeyance. See 37 CFR 1.85(a).

Replacement drawing sheet(s) including the correction is required if the drawing(s) is objected to. See 37 CFR 1.121(d).

Priority under 35 U.S.C. § 119

12)☐ Acknowledgment is made of a claim for foreign priority under 35 U.S.C. § 119(a)-(d) or (f).

Certified copies:

a)☐ All b)☐ Some * c)☐ None of the:

1.☐ Certified copies of the priority documents have been received.

2.☐ Certified copies of the priority documents have been received in Application No. _____.

3.☐ Copies of the certified copies of the priority documents have been received in this National Stage application from the International Bureau (PCT Rule 17.2(a)).

* See the attached detailed Office action for a list of the certified copies not received.

Interim copies:

a)☐ All b)☐ Some c)☐ None of the: Interim copies of the priority documents have been received.

Attachment(s)

1) ☒ Notice of References Cited (PTO-892)

2) ☒ Information Disclosure Statement(s) (PTO/SB/08) Paper No(s)/Mail Date _____.

3) ☐ Interview Summary (PTO-413) Paper No(s)/Mail Date. _____ .

4) ☐ Other: _____.

DETAILED ACTION

Claims 13-220 are withdrawn from further consideration pursuant to 37 CFR 1.142(b) as being drawn to a nonelected Group II, there being no allowable generic or linking claim. Election was made **without** traverse in the reply filed on 1/28/2013.

Claim Rejections - 35 USC § 112

The following is a quotation of 35 U.S.C. 112(b):

(B) CONCLUSION.—The specification shall conclude with one or more claims particularly pointing out and distinctly claiming the subject matter which the inventor or a joint inventor regards as the invention.

The following is a quotation of 35 U.S.C. 112 (pre-AIA), second paragraph:

The specification shall conclude with one or more claims particularly pointing out and distinctly claiming the subject matter which the applicant regards as his invention.

Claim 2-23 are rejected under 35 U.S.C. 112(b) or 35 U.S.C. 112 (pre-AIA), second paragraph, as being indefinite for failing to particularly point out and distinctly claim the subject matter which the inventor or a joint inventor, or for pre-AIA the applicant regards as the invention.

In regard to claim 21

The limitation: “whereby an optimal amount of AC power is generated and supplied to said power grid regardless of the' performance of any individual power source” provides functional language without any associated physical structure germane to patentability. Furthermore, the term "optimal" is a relative term and indefinite. The limitation taken as a whole

is unclear that it is unknown what, if any, **structure** (emphasis added) is intended to be added to the claim by said limitations. Applicant is reminded that an apparatus must be distinguished from the prior art in terms of structure rather than function noting that apparatus claims cover what a device is, not what a device does (see MPEP 2114).

Claim Rejections - 35 USC § 103

The following is a quotation of 35 U.S.C. 103(a) which forms the basis for all obviousness rejections set forth in this Office action:

> (a) A patent may not be obtained though the invention is not identically disclosed or described as set forth in section 102 of this title, if the differences between the subject matter sought to be patented and the prior art are such that the subject matter as a whole would have been obvious at the time the invention was made to a person having ordinary skill in the art to which said subject matter pertains. Patentability shall not be negatived by the manner in which the invention was made.

Claims 21-23 and 26-30 are rejected under 35 U.S.C. 103(a) as being unpatentable over Aoki et al. ("Aoki") JP 09275637A.

In regard to claims 21, 26, and 29

Aoki teaches:

A scalable DC to AC power inversion system for providing AC power to a power grid from a plurality of individual DC power sources each having a DC power output port, comprising:

a) a plurality of power inverters, each of said power inverters having at least one DC power input port (ie. input to FC, fig1), an AC power input port (ie respective input ports 333, fig1), and an

AC power output port (ie respective output ports 134, fig1), each of said DC power input ports having one DC power source connected thereto (read on by each respective FC);

b) said AC power output port of each inverter being connected in a daisy chain to the AC power input port of the next inverter (read on by both the physical connection (ie "input to output") and also the daisy-chain master/slave configuration, see Abstract, provide translation) except for the AC power input port of the first inverter being left open (see open input of first/top inverter)

c) whereby said system is incrementally scalable by adding or subtracting DC power sources and daisy-chained inverters (See fig1).

Aoki fails to teach and the AC power output port of the last inverter being connected to a power service panel of the power grid and providing power to the grid (noting Aoki does not particular teach what the high power scalable inverter inversion system output is attached to);

Official Notice is taken that both the concept and advantages of providing a power service panel connection from a supplemental utility grid co-generation system and providing power to the utility grid are well known and expected in the art. It would have been obvious to have included the power service panel in Aoki as these panels are known to provide known and desirable power connections from a co-generation system for use on the utility grid.

In regard to claims 22, 23, 27, 28

Aoki fails to teach the number of phases used in the inverter system.

Official Notice is taken that both the concept and advantages of providing for single or three phases power in power inversion systems are well known and expected in the art. It would have been obvious to have included the desirable number of phases (single or three) in Aoki's inverter system as the number of phases are known to be readily chosen depending on the needs of the connected grid/load.

In regard to claim 30

Aoki further teaches:

The method of claim 26 where the providing of AC power includes producing a total AC power that is the summation of the AC power supplied by each said inverter (read on by the parallel inverter operation, see provided translation Abstract).

Allowable Subject Matter

Claims 1-12 and 24-25 are allowed.

Conclusion

Any inquiry concerning this communication or earlier communications from the examiner should be directed to Daniel Cavallari whose telephone number is 571-272-8541. The examiner can normally be reached on Monday-Friday 10:00am-6:30pm.

If attempts to reach the examiner by telephone are unsuccessful, the examiner's supervisor, Jared Fureman can be reached at (571)272-2391. The fax phone number for the organization where this application or proceeding is assigned is 571-273-8300.

Information regarding the status of an application may be obtained from the Patent Application Information Retrieval (PAIR) system. Status information for published applications may be obtained from either Private PAIR or Public PAIR. Status information for unpublished applications is available through Private PAIR only. For more information about the PAIR system, see http://pair-direct.uspto.gov. Should you have questions on access to the Private PAIR system, contact the Electronic Business Center (EBC) at 866-217-9197 (toll-free). If you would like assistance from a USPTO Customer Service Representative or access to the automated information system, call 800-786-9199 (IN USA OR CANADA) or 571-272-1000.

/Daniel Cavallari/

6/2/2013

PRIMARY PATENT EXAMINER
ART UNIT 2836

Notice of References Cited	Application/Control No. 12/837,162	Applicant(s)/Patent Under Reexamination CHENG ET AL.	
	Examiner DANIEL CAVALLARI	Art Unit 2836	Page 1 of 1

U.S. PATENT DOCUMENTS

*		Document Number Country Code-Number-Kind Code	Date MM-YYYY	Name	Classification
	A	US-			
	B	US-			
	C	US-			
	D	US-			
	E	US-			
	F	US-			
	G	US-			
	H	US-			
	I	US-			
	J	US-			
	K	US-			
	L	US-			
	M	US-			

FOREIGN PATENT DOCUMENTS

*		Document Number Country Code-Number-Kind Code	Date MM-YYYY	Country	Name	Classification
	N	JP 09275637 A	10-1997	Japan	ISHIZAWA et al.	
	O					
	P					
	Q					
	R					
	S					
	T					

NON-PATENT DOCUMENTS

*		Include as applicable: Author, Title Date, Publisher, Edition or Volume, Pertinent Pages)
	U	
	V	
	W	
	X	

*A copy of this reference is not being furnished with this Office action. (See MPEP § 707.05(a).)
Dates in MM-YYYY format are publication dates. Classifications may be US or foreign.

(19)日本国特許庁（ＪＰ）　(12) 公開特許公報（Ａ）　(11)特許出願公開番号

特開平9－275637

(43)公開日　平成９年(1997)10月21日

(51)Int.Cl.[6]	識別記号	庁内整理番号	ＦＩ	技術表示箇所
Ｈ０２Ｊ　3/38			Ｈ０２Ｊ　3/38	Ｍ
				Ｎ
				Ｑ
Ｈ０２Ｍ　7/48		9181－5H	Ｈ０２Ｍ　7/48	Ｄ
// Ｈ０１Ｍ　8/00			Ｈ０１Ｍ　8/00	Ａ

審査請求　未請求　請求項の数３　ＯＬ　（全 ８ 頁）

(21)出願番号　特願平8－81732

(22)出願日　平成８年(1996)４月３日

(71)出願人　000001889
三洋電機株式会社
大阪府守口市京阪本通２丁目５番５号

(71)出願人　000004226
日本電信電話株式会社
東京都新宿区西新宿三丁目19番２号

(71)出願人　593063161
株式会社エヌ・ティ・ティ　ファシリティーズ
東京都港区芝浦三丁目４番１号

(74)代理人　弁理士　中島　司朗

最終頁に続く

(54)【発明の名称】　燃料電池の並列運転システム

(57)【要約】

【課題】　大容量の交流電力を得るための燃料電池の並列運転システムを提供すること。

【解決手段】　燃料電池ＦＣに接続されたＤＣ－ＡＣインバータと交流出力端子１～４３１とが、リレースイッチＲＹ２ａ～ｄを介して線路１～４４１で接続され、商用電源入力端子１～４３２がリレースイッチＲＹ１ａ～ｄを介して線路１～４４１の節点１～４４１ａに線路１～４４２で接続され、ＤＣ－ＡＣインバータ起動中は、リレースイッチＲＹ２ａ～ｄがオン、リレースイッチＲＹ１ａ～ｄがオフされ、ＤＣ－ＡＣインバータ停止中は、リレースイッチＲＹ２ａ～ｄがオフ、リレースイッチＲＹ１ａ～ｄがオンされる各燃料電池電源装置１～４００が、節点１～４４１ｂを接続点として、専用ケーブル５～７００で、デージーチェーン方式に接続されている。

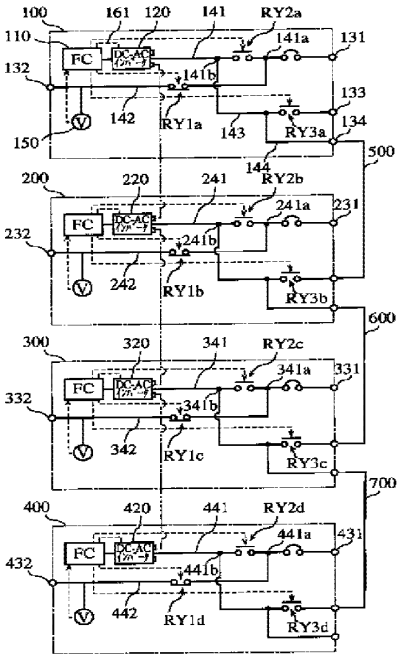

1

【特許請求の範囲】

【請求項１】　燃料電池と、

マスタ・スレーブの設定が可能で、前記燃料電池の直流出力を交流出力に変換するＤＣ－ＡＣインバータと、

ＤＣ－ＡＣインバータの出力端子と外部負荷が接続される交流出力端子とを接続する第１の給電路と、

外部電源入力端子から入力される外部商用電源電圧をそのまま前記交流出力端子に出力する第２の給電路と、

前記第１の給電路に設けられた第１のスイッチと、

前記第２の給電路に設けられた第２のスイッチと、

前記ＤＣ－ＡＣインバータ起動中は、第１のスイッチをオン、第２のスイッチをオフし、前記燃料電池を電源として外部負荷に給電し、前記ＤＣ－ＡＣインバータ停止中は、第１のスイッチをオフ、第２のスイッチをオンし、外部商用電源から外部負荷に給電するよう制御する制御装置と、を有した燃料電池電源装置を複数基備え、

各燃料電池電源装置の第１の給電路中のＤＣ－ＡＣインバータの出力端子と第１のスイッチとの間を接続点とし、マスタ機として設定された燃料電池電源装置を先頭としてスレーブ機として設定された残りの燃料電池電源装置が、専用ケーブルで、デージーチェーン方式に接続されてなることを特徴とする燃料電池の並列運転システム。

【請求項２】　前記燃料電池電源装置は、さらに、外部電源入力端子における電圧を検出する電圧検出手段を備え、

前記制御装置は、外部商用電源から外部負荷に給電中に、前記電圧検出手段が所定値以下の電圧を検出すると、前記燃料電池及び前記ＤＣ－ＡＣインバータを起動させることを特徴とする請求項１記載の燃料電池の並列運転システム。

【請求項３】　前記第１のスイッチは、ノーマリオフ型のリレースイッチで、前記第２のスイッチは、ノーマリオン型のリレースイッチで構成されていることを特徴とする請求項１または２記載の燃料電池の並列運転システム。

【発明の詳細な説明】

【０００１】

【発明の属する技術分野】本発明は、燃料電池電源装置を並列接続して大容量の交流電力を得るための燃料電池の並列運転システムに関する。

【０００２】

【従来の技術】燃料電池は、従来から利用されているエンジンによって発電機を駆動させて発電する電源装置と比べて、発電時の騒音や大気汚染物質の排出が少ないといった点で優れているため、特に屋内等に設置される非常用電源として注目されている。

【０００３】非常用電源装置として使用される従来の燃料電池電源装置を図６（ａ）に示す。本図に示すように、従来の燃料電池電源装置１０では、燃料電池１１の

2

直流出力を交流出力に変換するＤＣ－ＡＣインバータ１２の出力端子と外部負荷接続端子１３とがリレースイッチ１４を介した線路１５で接続され、商用電源入力端子１６がリレースイッチ１７を介した線路１８で線路１５の節点１５ａに接続されている。そして、常時は、リレースイッチ１４をオフ、リレースイッチ１７をオンに保持し、商用電源を通過出力させて外部負荷を駆動し、停電時には、自動的にリレースイッチ１７をオフ、リレースイッチ１４をオンさせ、燃料電池１１を起動させて、燃料電池１１からＤＣ－ＡＣインバータ１２を介して出力される交流電力によって外部負荷を駆動させている。

【０００４】ところで、外部負荷となる電気機器類が必要とする電力は各機器によってさまざまであり、中には大容量の電力を必要とするものもある。これに対応するため、各機器の容量に応じた燃料電池を開発し、その燃料電池を搭載した燃料電池電源装置を提供することも考えられるが、徒に仕様を増やすことになり、得策ではない。そこで、機器の容量に応じて、燃料電池電源装置を複数台並列接続した並列運転システムとして提供することが検討されている。

【０００５】

【発明が解決しようとする課題】しかしながら、図６（ｂ）に示すように、上記した従来の燃料電池電源装置を、並列接続ケーブル４０を用いて、単純に並列接続して並列運転システムを構成したのでは、以下のような問題が生じる。即ち、並列接続される全ての燃料電池電源装置において、商用電源の極性が揃っていないと、燃料電池電源装置間でショートを起こす。また、燃料電池電源装置内何れかの商用電源コードが誤ってコンセントから引き抜かれて、停電を検出した状態になった場合、その燃料電池電源装置は、燃料電池を自動起動させ、ＤＣ－ＡＣインバータを介して交流電力を供給するが、そのとき、その他の電源装置から通過出力される商用ＡＣ出力と、インバータ出力とが接続されることとなり、インバータが故障する。

【０００６】本発明は、上記課題に鑑み、システムを構成する各燃料電池電源装置を、その極性を考慮することなく、商用電源に接続することができ、かつ、システムを構成する燃料電池電源装置の内の何れかが誤って停電検出をしたときでも、ＤＣ－ＡＣインバータが故障することのない燃料電池の並列運転システムを提供することを目的とする。

【０００７】

【課題を解決するための手段】上記の目的を達成するため、本発明の燃料電池の並列運転システムは、燃料電池と、マスタ・スレーブの設定が可能で、前記燃料電池の直流出力を交流出力に変換するＤＣ－ＡＣインバータと、ＤＣ－ＡＣインバータの出力端子と外部負荷が接続される交流出力端子とを接続する第１の給電路と、外部電源入力端子から入力される外部商用電源電圧をそのま

ま前記交流出力端子に出力する第２の給電路と、前記第１の給電路に設けられた第１のスイッチと、前記第２の給電路に設けられた第２のスイッチと、前記ＤＣ－ＡＣインバータ起動中は、第１のスイッチをオン、第２のスイッチをオフし、前記燃料電池を電源として外部負荷に給電し、前記ＤＣ－ＡＣインバータ停止中は、第１のスイッチをオフ、第２のスイッチをオンし、外部商用電源から外部負荷に給電するよう制御する制御装置とを有した燃料電池電源装置を複数基備え、各燃料電池電源装置の第１の給電路中のＤＣ－ＡＣインバータの出力端子と第１のスイッチとの間を接続点とし、マスタ機として設定された燃料電池電源装置を先頭としてスレーブ機として設定された残りの燃料電池電源装置が、専用ケーブルで、デージーチェーン方式に接続されてなることを特徴としている。

【０００８】また、燃料電池電源装置は、さらに、外部電源入力端子における電圧を検出する電圧検出手段を備え、制御装置は、外部商用電源から外部負荷に給電中に、前記電圧検出手段が所定値以下の電圧を検出すると、前記燃料電池及び前記ＤＣ－ＡＣインバータを起動させることを特徴としている。さらに、第１のスイッチは、ノーマリオフ型のリレースイッチで、第２のスイッチは、ノーマリオン型のリレースイッチで構成されていることを特徴としている。

【０００９】

【発明の実施の形態】以下、本発明の実施の形態について図面を参照しながら具体的に説明する。図１は、本発明の一実施の形態に係る燃料電池の並列運転システムの概略構成図である。本図に示すように、本燃料電池の並列運転システムは、４台の燃料電池電源装置１００～４００で構成され、燃料電池電源装置１００を先頭に、残りの燃料電池電源装置２００～４００が、専用ケーブル５００～７００で、いわゆるデージーチェーン方式に接続されている。

【００１０】４台の燃料電池電源装置は、全て同様なので、燃料電池電源装置１００を代表として、以下に、その説明を行う。１１０は、燃料電池ユニットであり、燃料電池、蓄電池及び制御装置（いずれも図示せず）で構成されている。燃料電池は、水素ボンベから供給される水素ガスと空気供給ファンによって供給される空気（酸素）とで電気化学的な反応により発電を行う。蓄電池は、電源装置の起動時に前記制御装置や後述するＤＣ－ＡＣインバータ１２０の制御電源として使用される。制御装置については、後で詳述する。

【００１１】１２０は、前記燃料電池から出力される直流電力を交流電力に変換するＤＣ－ＡＣインバータであり、ＤＣ－ＡＣインバータ１２０と交流出力端子１３１とがノーマリオフ型のリレースイッチＲＹ２ａを介して線路１４１で接続されている。また、ＤＣ－ＡＣインバータ１２０は、マスタ・スレーブの選択が可能なタイプのインバータであり、その選択は、図示しないマスタ・スレーブ選択スイッチによって行う。マスタ選択されたＤＣ－ＡＣインバータ（以下、マスタ機とも言う）は、入力された直流電力を自ら独立して、所定の電圧、周波数の交流電力に変換して出力する。スレーブ選択されたＤＣ－ＡＣインバータ（以下、スレーブ機とも言う）は、マスタ機からの制御信号に従って、入力された直流電力をマスタ機の交流出力と電圧、位相の揃った交流電力に変換して出力する。なお、スレーブ機は、マスタ機から制御信号が入力されないと、交流電力を出力しない。また、マスタ、スレーブのどちらが選択されているかは、信号線１６１を介して、燃料電池ユニット１１０の制御装置に送信される。本実施の形態では、燃料電池電源装置１００のＤＣ－ＡＣインバータ１２０をマスタ機とし、残りの燃料電池電源装置２００～４００のＤＣ－ＡＣインバータ２２０～４２０をスレーブ機ととして、図中の二点鎖線で示す制御信号線で各インバータを接続している。この制御信号線を通じてマスタ機から送信される制御信号にしたがって、各スレーブ機は、マスタ機の交流出力と電圧、位相の揃った交流電力を出力する。

【００１２】１３２は、電源コード（図示せず）が接続されている商用電源入力端子であり、商用電源入力端子１３２は、ノーマリオン型のリレースイッチＲＹ１を介して線路１４１の節点１４１ａに線路１４２で接続される。節点１４１ａは、線路１４１中のリレースイッチＲＹ２ａと交流出力端子１３１との間に位置する点である。

【００１３】１５０は、商用電源入力端子１３２における電圧を監視するための電圧計であり、線路１４２の商用電源入力端子１３２とリレースイッチＲＹ１ａとの間に設けられており、前記制御装置に接続されている。電圧計１５０は、商用電源入力端子１３２を通じて商用電源が入力されているときの、商用電源の停電監視に専ら使用される。

【００１４】１３３、１３４は、専用ケーブルの接続端子である。接続端子１３３は、ノーマリオフ型のリレースイッチＲＹ３ａを介して線路１４１の節点１４１ｂに線路１４３で接続される。節点１４１ｂは、線路１４１中のリレースイッチＲＹ２ａとＤＣ－ＡＣインバータ１２０との間に位置する点である。接続端子１３４は、線路１４３の節点１４３ａに線路１４４で接続される。節点１４３ａは線路１４３中のリレースイッチＲＹ３ａと節点１４１ｂとの間に位置する点である。

【００１５】燃料電池ユニット１１０の制御装置は、燃料電池への水素と空気の給止、燃料電池の出力電圧・出力電流の監視による燃料電池の定常運転可能状態か否かの判断、燃料電池の定常運転可能状態中のＤＣ－ＡＣインバータ１２０の起動、燃料電池の定常運転不可状態中のＤＣ－ＡＣインバータ１２０の停止、リレースイッチ

ＲＹ１ａ～３ａの開閉制御を行う装置である。また、制御装置は、手動モード・自動モード選択スイッチを有しており、手動モードが選択されているときは、燃料電池の起動スイッチがオンされると、燃料電池への水素と空気の供給を開始し、燃料電池の起動スイッチがオフされると、燃料電池への水素と空気の供給を停止する。一方、自動モードが選択されているときは、電圧計１５０が所定の電圧を検出しているときは、燃料電池への水素と空気の供給を行わず（停止し）、電圧計１５０が電圧を検出していないときは、燃料電池への水素と空気の供給を行う（開始する）。リレースイッチＲＹ１ａ～３ａの開閉制御の開閉制御は、図２に示すリレースイッチのオン・オフ条件に従い行う。即ち、本図に示すように、ＤＣ－ＡＣインバータ１２０起動中は、リレースイッチＲＹ１ａをオフ、ＲＹ２ａをオンに保持し、ＲＹ３ａは、マスタ選択されていればオフに、スレーブ選択されていればオンに保持する。一方、ＤＣ－ＡＣインバータ１２０停止中は、リレースイッチＲＹ１ａをオンに、ＲＹ２ａ、ＲＹ３ａをオフに保持する。なお、ＤＣ－ＡＣインバータ１２０が起動されるのは、制御装置の手動モード・自動モード選択スイッチが手動モードに選択されているときは、燃料電池が手動起動され、定常運転可能状態になったとき、自動モードが選択されているときは、電圧計１５０によって商用電源入力端子１３２における無電圧が検出され、燃料電池が起動され、定常運転可能状態になったときである。一方、ＤＣ－ＡＣインバータ１２０が停止されるのは、制御装置の手動モード・自動モード選択スイッチが手動モードに選択されているときは、燃料電池が手動停止されたとき、自動モードが選択されているときは、電圧計１５０によって商用電源入力端子１３２における電圧が検出されときである。

【００１６】上記のように構成された本燃料電池の並列運転システムの動作について、リレースイッチＲＹ１～３の開閉動作を中心に説明する。図１は、本燃料電池の並列運転システムの並列運転停止時の状態、例えば、手動モードが選択されているときであれば、どの燃料電池電源装置の燃料電池も手動起動されておらず、また、自動モードが選択されているときであれば、どの燃料電池電源装置の電圧計も商用電源入力端子における無電圧を検出していない状態を示す図である。

【００１７】本図に示すように、各燃料電池電源装置の制御装置は、図２のリレースイッチのオン・オフ条件に従い、ＲＹ１をオンに、ＲＹ２、ＲＹ３をオフに保持する。したがって、燃料電池電源装置１００は、線路１４２と線路１４１の節点１４１ａ－交流出力端子１３１間を介して、燃料電池電源装置２００は、線路２４２と線路２４１の節点２４１ａ－交流出力端子２３１間を介して、燃料電池電源装置３００は、線路３４２と線路３４１の節点３４１ａ－交流出力端子３３１間を介して、燃料電池電源装置４００は、線路４４２と線路４４１の節点４４１ａ－交流出力端子４３１間を介して、それぞれ商用電源を通過出力することになる。このとき、各燃料電池電源装置の商用電源入力端子１３２、２３２、３３２、４３２から専用ケーブルに至る線路は、リレースイッチＲＹ２ａ～ｄにより切断されるので、各燃料電池電源装置間の並列接続は解消されることとなり、各燃料電池電源装置で入力される商用電源の極性が全ての燃料電池電源装置で揃っていない場合であっても、そのことで問題が生じることはない。

【００１８】次に、図１の状態から、全ての燃料電池電源装置のＤＣ－ＡＣインバータが起動された状態を図３に示す。各燃料電池電源装置の制御装置は、図２のリレースイッチのオン・オフ条件に従い、ＲＹ１をオフにＲＹ２をオンに保持し、ＤＣ－ＡＣインバータがマスタ選択されている燃料電池電源装置１００のリレースイッチＲＹ３ａはオフに、ＤＣ－ＡＣインバータがスレーブ選択されている燃料電池電源装置２００、３００、４００のリレースイッチＲＹ３ｂ～ｄはオンに保持する。

【００１９】したがって、各ＤＣ－ＡＣインバータの出力は、各燃料電池電源装置の線路１４１、１４３、１４４、線路２４１、２４３、２４４、線路３４１、３４３、３４４、線路４４１、４４３、４４４及び専用ケーブル５００～７００を介して並列に接続されることとなり、いずれの交流出力端子からであっても大容量の交流電力を得ることが可能となる。このとき、リレースイッチＲＹ１ａ～ｄはオフされているので、商用電源の出力とＤＣ－ＡＣインバータの出力とが接続されることはない。

【００２０】次に、図１の状態から本システムを構成する燃料電池電源装置の内の１台の電源コードが誤って抜かれた後の状態を図４に示す。ここでは、燃料電池電源装置２００の電源コードが抜かれたものとする。電源コードが抜かれると、既述したように、燃料電池電源装置２００の電圧計２５０からの無電圧検出信号によって、制御装置は、燃料電池を起動させ、燃料電池が定常運転可能な状態になるとＤＣ－ＡＣインバータ２２０を起動し、リレースイッチＲＹ１ｂをオフし、続いて、リレースイッチＲＹ２ｂをオンし、リレースイッチＲＹ３ｂをオンする。したがって、燃料電池電源装置２００のインバータ出力端は、線路２４１、線路２４３及び専用ケーブル５００を介して燃料電池電源装置１００の接続端子１３４と、線路２４１、線路２４３、線路２４４及び専用ケーブル６００を介して燃料電池電源装置３００の接続端子３３３とそれぞれ接続されることになる。

【００２１】一方、燃料電池電源装置１００と燃料電池電源装置３００とは、継続して商用電源を通過出力しているが、燃料電池電源装置１００の商用電源入力端子１３２から専用ケーブル５００の接続端子１３４に至る線路はリレースイッチＲＹ２ａで断たれており、燃料電池電源装置３００の商用電源入力端子３３２から専用ケー

ブル６００の接続端子３３３に至る線路はリレースイッチＲＹ２ｃで断たれているので、両商用電源の出力はＤＣ－ＡＣインバータ２２０に接続されない。したがって、商用電源の出力がＤＣ－ＡＣインバータに接続されることによって、ＤＣ－ＡＣインバータが故障するといった問題は生じない。

【００２２】つづいて、本システムにおいて、燃料電池電源装置１００以外の燃料電池電源装置のＤＣ－ＡＣインバータが誤ってマスタ選択された場合について説明する。ここでは、燃料電池電源装置２００、４００のＤＣ－ＡＣインバータ２２０、４２０がマスタ選択されたものとする。この状態で、商用電源を通過出力中に、例えば商用電源の停電によって、全ての燃料電池電源装置のＤＣ－ＡＣインバータが起動されたとする。すると、図２のリレースイッチのオン・オフ条件に従い、ＤＣ－ＡＣインバータがマスタ選択されている燃料電池電源装置１００、２００、４００の制御装置は、リレースイッチＲＹ１をオフに、リレースイッチＲＹ２をオンに、リレースイッチＲＹ３をオフに保持し、スレーブ選択されている燃料電池電源装置３００の制御装置は、リレースイッチＲＹ１をオフに、リレースイッチＲＹ２、ＲＹ３をオンに保持する。このときの状態を図５に示す。

【００２３】本図に示すように、燃料電池電源装置１００と誤ってマスタ選択された燃料電池電源システム２００との並列接続は、リレースイッチＲＹ３ｂによって解消されるため、マスタ機同士の出力が重なるといった事が起こらない。したがって、マスタ機同士の出力が重なるとインバータが故障することがあるが、そういった問題は生じない。

【００２４】また、誤ってマスタ選択された燃料電池電源システム４００は、リレースイッチＲＹ３ｄによって、燃料電池電源システム３００と燃料電池電源システム２００との並列接続を解消するので、燃料電池電源システム４００のマスタ機と燃料電池電源システム２００のマスタ機の出力が重なるといったことが回避され、上記のような問題が生じない。

【００２５】なお、本実施の形態では、燃料電池電源装置４台で並列運転システムを構成したが、燃料電池電源装置の台数はこれに限られないのは言うまでもない。

【００２６】

【発明の効果】以上、本発明に係る燃料電池の並列運転システムによれば、ＤＣ－ＡＣインバータ起動中は、ＤＣ－ＡＣインバータの出力端子と外部負荷が接続される交流出力端子とを接続する第１の給電路に設けられた第１のスイッチをオンし、外部電源入力端子から入力される外部商用電源電圧をそのまま前記交流出力端子に出力する第２の給電路に設けられた第２のスイッチがオフし、燃料電池を電源として外部負荷に給電し、前記ＤＣ－ＡＣインバータ停止中は、前記第１のスイッチをオフし、前記第２のスイッチのオンして、外部商用電源から外部負荷に給電する複数の燃料電池電源装置が、各燃料電池電源装置の第１の給電路中のＤＣ－ＡＣインバータの出力端子と第１のスイッチとの間を接続点として、デージーチェーン方式に接続されているので、外部商用電源から外部負荷に給電するときは、外部電源入力端子から接続点に至る線路は、第１のスイッチにより断たれることになり、並列接続が解消されることとなる。したがって、各燃料電池電源装置間で入力される商用電源の極性が全ての燃料電池電源装置で揃っていない場合でも、燃料電池電源装置間で短絡を生じることがない。

【００２７】また、複数の燃料電池電源装置の内、一部の燃料電池電源装置のＤＣ－ＡＣインバータが起動され、残りの燃料電池電源装置が外部商用電源から外部負荷に給電している場合であっても、残りの燃料電池電源装置において外部電源入力端子から接続点に至る線路は、第１のスイッチにより断たれることとなる関係上、外部商用電源出力が、前記一部の燃料電池電源装置のＤＣ－ＡＣインバータに接続されることがないため、ＤＣ－ＡＣインバータが故障することがない。

【００２８】さらに、外部商用電源から外部負荷に給電中に、外部電源入力端子における電圧が所定値以下になると、燃料電池及びＤＣ－ＡＣインバータが起動されるので、第１のスイッチがオン、第２のスイッチがオフされることとなり、燃料電池を電源とした、外部負荷への給電に切り換わる。したがって、例えば、外部商用電源が停電したような場合であっても、自動的に燃料電池からの給電に切り換わり、引き続き、外部負荷を駆動させることができる。

【００２９】また、第１のスイッチは、ノーマリオフ型のリレースイッチで、第２のスイッチは、ノーマリオン型のリレースイッチで構成されているので、制御装置が作動していなくても、即ち、燃料電池電源装置が起動されていなくても、外部商用電源を通過出力できる。また、制御装置が作動中であっても、外部商用電源を通過出力しているときには、スイッチ保持のための電力を要しない。

【図面の簡単な説明】

【図１】本発明の一実施の形態に係る燃料電池の並列運転システムの概略構成を示す図である。

【図２】上記実施の形態における、リレースイッチＲＹ１～３のオン・オフ条件を示す図である。

【図３】上記実施の形態における、燃料電池の並列運転時の状態を示す図である。

【図４】上記実施の形態において、並列運転停止時に、１台の燃料電池電源装置の電源コードが誤って抜かれた後の状態を示す図である。

【図５】上記実施の形態において、マスタ・スレーブが誤って選択された状態で、全ての燃料電池電源装置のＤＣ－ＡＣインバータが起動されたときの状態を示す図である。

【図６】従来技術を説明するための図である。

【符号の説明】

１００、２００、３００、４００　燃料電池電源装置

１１０、２１０、３１０、４１０　燃料電池ユニット

１２０、２２０、３２０、４２０　ＤＣ－ＡＣインバータ

ＲＹ１ａ、ＲＹ１ｂ、ＲＹ１ｃ、ＲＹ１ｄ　リレースイッチ

ＲＹ２ａ、ＲＹ２ｂ、ＲＹ２ｃ、ＲＹ２ｄ　リレースイッチ

ＲＹ３ａ、ＲＹ３ｂ、ＲＹ３ｃ、ＲＹ３ｄ　リレースイッチ

５００、６００、７００　専用ケーブル

【図１】

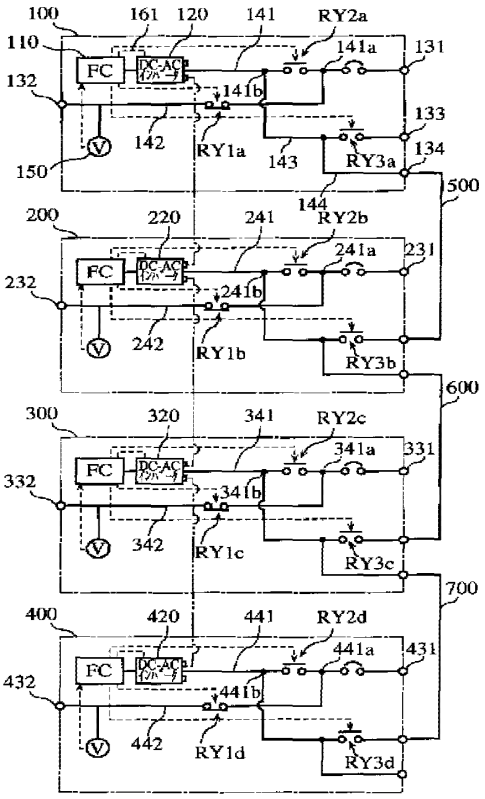

【図２】

DC-ACｲﾝﾊﾞｰﾀ	RY1	RY2	RY3	
起動中	OFF	ON	マスタ	OFF
			スレーブ	ON
停止中	ON	OFF	OFF	

【図３】

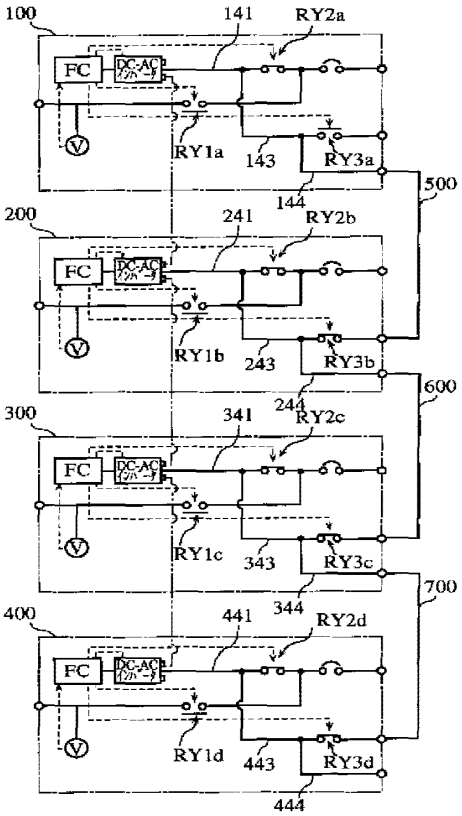

【図４】

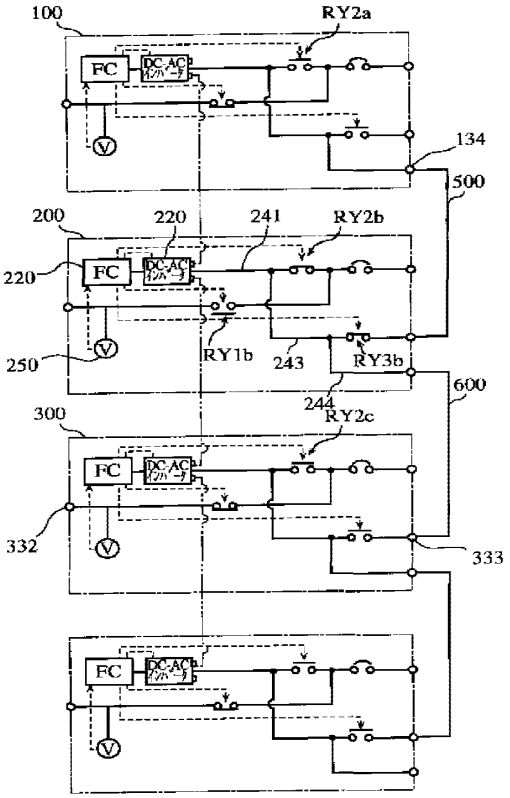
100
RY2a
FC
DC-AC
134
500
200
220
241
RY2b
220
RY1b
243
RY3b
250
600
244
RY2c
300
332
333

【図５】

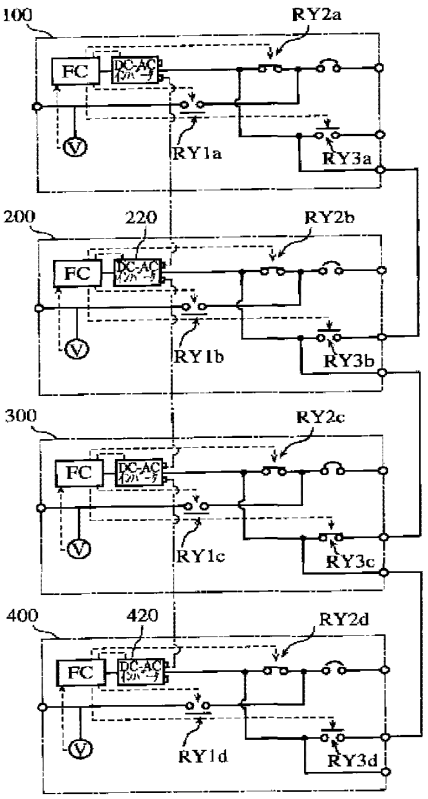
100
RY2a
FC
DC-AC
RY1a
RY3a
200
220
RY2b
RY1b
RY3b
300
RY2c
RY1c
RY3c
400
420
RY2d
RY1d
RY3d

【図６】

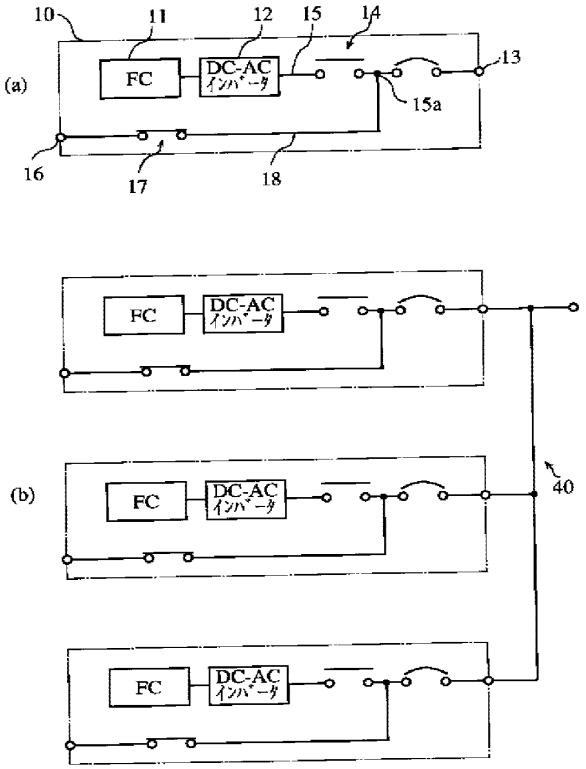

フロントページの続き

(71)出願人　000128094
株式会社エヌエフ回路設計ブロック
横浜市港北区網島東６丁目３番20号
(72)発明者　石沢　真樹
東京都新宿区西新宿三丁目19番２号　日本電信電話株式会社内
(72)発明者　青木　忠一
東京都新宿区西新宿三丁目19番２号　日本電信電話株式会社内
(72)発明者　河野　勝
東京都港区六本木一丁目４番33号　株式会社エヌ・ティ・ティファシリティーズ内
(72)発明者　進藤　浩二
大阪府守口市京阪本通２丁目５番５号　三洋電機株式会社内
(72)発明者　山本　聡史
大阪府守口市京阪本通２丁目５番５号　三洋電機株式会社内
(72)発明者　千木　信安
横浜市港北区網島東６丁目３番20号　株式会社エヌエフ回路設計ブロック内

DERWENT-ACC-NO: 1998-006890

DERWENT-WEEK: 200302

Copyright ©2013 Thomson Reuters

TITLE: Parallel operation system of fuel battery has multiple batteries connected by daisy-chain method so that when one battery is operating, other batteries are switched to slave mode

INVENTOR: AOKI C; ISHIZAWA M ; KONO M ; SENBON N ; SHINDO K ; YAMAMOTO S

PATENT-ASSIGNEE: NF KAIRO SEKKEI BLOCK KK[NFKAN] , NIPPON TELEGRAPH & TELEPHONE CORP[NITE] , NTT FACILITIES KK[NITE] , SANYO ELECTRIC CO LTD[SAOL]

PRIORITY-DATA: 1996JP-081732 (April 3, 1996)

PATENT-FAMILY:

PUB-NO	PUB-DATE	LANGUAGE
JP 09275637 A	October 21, 1997	JA
JP 3357238 B2	December 16, 2002	JA

APPLICATION-DATA:

PUB-NO	APPL-DESCRIPTOR	APPL-NO	APPL-DATE
JP 09275637A	N/A	1996JP-081732	April 3, 1996
JP 3357238B2	Previous Publ	1996JP-081732	April 3, 1996

INT-CL-CURRENT:

TYPE	IPC DATE
CIPP	H02J3/38 20060101
CIPS	H01M8/00 20060101
CIPS	H02J9/06 20060101
CIPS	H02M7/493 20070101

ABSTRACTED-PUB-NO: JP 09275637 A

BASIC-ABSTRACT:

The operation system has multiple fuel batteries (100-400)

which are connected in parallel by the master-slave relation. The DC voltage from the fuel battery is converted into the AC voltage by a DC-AC inverter (110-410) respectively and is supplied to an external load. Alternatively, the AC voltage from an external main supply is supplied to the external load through the AC output terminal. A pair of switches are provided in the first electric supply paths and in the second electric supply path, which are switched ON to supply the voltage to the load either from the battery or from the external supply. The fuel batteries are connected in the daisy-chain method so that when one fuel battery is operated, the other batteries are at the slave mode.

ADVANTAGE - Avoids short circuit generation. Enables continuous power supply to load even in power failure state. Obtains electric power of large capacity.

CHOSEN-DRAWING: Dwg.1/6

TITLE-TERMS: PARALLEL OPERATE SYSTEM FUEL BATTERY MULTIPLE CONNECT DAISY CHAIN METHOD SO ONE SWITCH SLAVE MODE

DERWENT-CLASS: X12 X16

EPI-CODES: X12-H01B; X12-J05; X16-C09;

SECONDARY-ACC-NO:
Non-CPI Secondary Accession Numbers: 1998-005728

OPAP IAP
NOV 29 2010
PATENT & TRADEMARK OFFICE

Receipt date: 11/29/2010 12837162 - GAU: 2836

PTO/SB/08a (08-03)
Approved for use through 07/31/2006. OMB 0651-0031
U.S. Patent and Trademark Office; U.S. DEPARTMENT OF COMMERCE
Under the Paperwork Reduction Act of 1995, no persons are required to respond to a collection of information unless it contains a valid OMB control number.

Substitute for form 1449A/PTO

INFORMATION DISCLOSURE STATEMENT BY APPLICANT

(Use as many sheets as necessary)

Sheet 1 of 2

Complete if Known	
Application Number	12/837,162
Filing Date	July 15, 2010
First Named Inventor	Cheng, George et al.
Art Unit	2838
Examiner Name	Unknown
Attorney Docket Number	350809-000003

U. S. PATENT DOCUMENTS

Examiner Initials*	Cite No.[1]	Document Number / Number-Kind Code[2] (if known)	Publication Date MM-DD-YYYY	Name of Patentee or Applicant of Cited Document	Pages, Columns, Lines, Where Relevant Passages or Relevant Figures Appear
		US -6,055,524	4/25/2000	Cheng, George	
		US -6,556,980	4/29/2003	Cheng, George	
		US -6,360,131	3/19/2002	Cheng, George	
		US -6,684,115	1/27/2004	Cheng, George	
		US -6,684,112	1/27/2004	Cheng, George	
		US -7,016,743	3/21/2006	Cheng, George	
		US -7,142,626	11/28/2006	Cheng, George	
		US -7,152,052	12/19/2006	Cheng, George	
		US -7,415,446	08/19/2008	Cheng, George	
		US -			
		US -			
		US -			
		US -			
		US -			
		US -			
		US -			
		US -			
		US -			

FOREIGN PATENT DOCUMENTS

Examiner Initials*	Cite No.[1]	Foreign Patent Document / Country Code[3] Number[4] Kind Code[5] (if known)	Publication Date MM-DD-YYYY	Name of Patentee or Applicant of Cited Document	Pages, Columns, Lines, Where Relevant Passages or Relevant Figures Appear	T[6]

Examiner Signature /Daniel Cavallari/ Date Considered 06/02/2013

•EXAMINER: Initial if reference considered, whether or not citation is in conformance with MPEP 609. Draw line through citation if not in conformance and not considered. Include copy of this form with next communication to applicant. 1 Applicant's unique citation designation number (optional). 2 See Kinds Codes of USPTO Patent Documents at www.uspto.gov or MPEP 901.04. 3 Enter Office that issued the document, by the two-letter code (WIPO Standard ST.3). 4 For Japanese patent documents, the indication of the year of the reign of the Emperor must precede the serial number of the patent document. 5 Kind of document by the appropriate symbols as indicated on the document under WIPO Standard ST.16 if possible. 6 Applicant is to place a check mark here if English language Translation is attached.

This collection of information is required by 37 CFR 1.97 and 1.98. The information is required to obtain or retain a benefit by the public which is to file (and by the USPTO to process) an application. Confidentiality is governed by 35 U.S.C. 122 and 37 CFR 1.14. This collection is estimated to take 2 hours to complete, including gathering, preparing, and submitting the completed application form to the USPTO. Time will vary depending upon the individual case. Any comments on the amount of time you require to complete this form and/or suggestions for reducing this burden, should be sent to the Chief Information Officer, U.S. Patent and Trademark Office, U.S. Department of Commerce, P.O. Box 1450, Alexandria, VA 22313-1450. DO NOT SEND FEES OR COMPLETED FORMS TO THIS ADDRESS. SEND TO: **Commissioner for Patents, P.O. Box 1450, Alexandria, VA 22313-1450.**

If you need assistance in completing the form, call 1-800-PTO-9199 and select option 2.

REST1\582188.1 ALL REFERENCES CONSIDERED EXCEPT WHERE LINED THROUGH. /D.C./

PTO/SB/08a (08-03)
Approved for use through 07/31/2006. OMB 0651-0031
U.S. Patent and Trademark Office; U.S. DEPARTMENT OF COMMERCE

Under the Paperwork Reduction Act of 1995, no persons are required to respond to a collection of information unless it contains a valid OMB control number.

Substitute for form 1449A/PTO

INFORMATION DISCLOSURE STATEMENT BY APPLICANT

(Use as many sheets as necessary)

Sheet	2	of	2

Complete if Known	
Application Number	12/837,162
Filing Date	July 15, 2010
First Named Inventor	Cheng, George et al.
Art Unit	2838
Examiner Name	Unknown
Attorney Docket Number	350809-000003

NON PATENT LITERATURE DOCUMENTS

Examiner Initials*	Cite No.[1]	Include name of the author (in CAPITAL LETTERS), title of the article (when appropriate), title of the item (book, magazine, journal, serial, symposium, catalog, etc.), date, page(s), volume-issue number(s), publisher, city and/or country where published.	T[2]
		RASHID H. MUHAMMAD, Power Electronics Handbook, 2007, Academic Press	

Examiner Signature	/Daniel Cavallari/	Date Considered	06/02/2013

*EXAMINER: Initial if reference considered, whether or not citation is in conformance with MPEP 609. Draw line through citation if not in conformance and not considered. Include copy of this form with next communication to applicant.
[1] Applicant's unique citation designation number (optional). 2 Applicant is to place a check mark here if English language Translation is attached.
This collection of information is required by 37 CFR 1.97 and 1.98. The information is required to obtain or retain a benefit by the public which is to file (and by the USPTO to process) an application. Confidentiality is governed by 35 U.S.C. 122 and 37 CFR 1.14. This collection is estimated to take 2 hours to complete, including gathering, preparing, and submitting the completed application form to the USPTO. Time will vary depending upon the individual case. Any comments on the amount of time you require to complete this form and/or suggestions for reducing this burden, should be sent to the Chief Information Officer, U.S. Patent and Trademark Office, U.S. Department of Commerce, P.O. Box 1450, Alexandria, VA 22313-1450. DO NOT SEND FEES OR COMPLETED FORMS TO THIS ADDRESS. **SEND TO: Commissioner for Patents, P.O. Box 1450, Alexandria, VA 22313-1450.**

If you need assistance in completing the form, call 1-800-PTO-9199 and select option 2.

REST1\582188.1 ALL REFERENCES CONSIDERED EXCEPT WHERE LINED THROUGH. /D.C./

UNITED STATES PATENT AND TRADEMARK OFFICE

UNITED STATES DEPARTMENT OF COMMERCE
United States Patent and Trademark Office
Address: COMMISSIONER FOR PATENTS
P.O. Box 1450
Alexandria, Virginia 22313-1450
www.uspto.gov

BIB DATA SHEET

CONFIRMATION NO. 3679

SERIAL NUMBER	FILING or 371(c) DATE	CLASS	GROUP ART UNIT	ATTORNEY DOCKET NO.
12/837,162	07/15/2010 RULE	307	2836	350809-000003

APPLICANTS
George Shu-Xing CHENG, Folsom, CA;
Steven L. Mulkey, Cameron Park, CA;

**** CONTINUING DATA ****************************
This appln claims benefit of 61/226,141 07/16/2009

**** FOREIGN APPLICATIONS ****************************

**** IF REQUIRED, FOREIGN FILING LICENSE GRANTED **** ** SMALL ENTITY **
07/27/2010

Foreign Priority claimed	☐ Yes ☑ No		STATE OR COUNTRY	SHEETS DRAWINGS	TOTAL CLAIMS	INDEPENDENT CLAIMS
35 USC 119(a-d) conditions met	☐ Yes ☑ No	☐ Met after Allowance				
Verified and Acknowledged	/DANIEL J CAVALLARI/ Examiner's Signature	Initials	CA	15	28	7

ADDRESS
DLA PIPER LLP US
P. O. BOX 2758
RESTON, VA 20195
UNITED STATES

TITLE
SMART AND SCALABLE POWER INVERTERS

FILING FEE RECEIVED		
1422	FEES: Authority has been given in Paper No._____ to charge/credit DEPOSIT ACCOUNT No._____ for following:	☐ All Fees ☐ 1.16 Fees (Filing) ☐ 1.17 Fees (Processing Ext. of time) ☐ 1.18 Fees (Issue) ☐ Other _____ ☐ Credit

Receipt date: 04/17/2013

12837162 - GAU: 2836

PTO/SB/08a (08-03)
Approved for use through 07/31/2006. OMB 0651-0031
U.S. Patent and Trademark Office; U.S. DEPARTMENT OF COMMERCE
Under the Paperwork Reduction Act of 1995, no persons are required to respond to a collection of information unless it contains a valid OMB control number.

Substitute for form 1449A/PTO

INFORMATION DISCLOSURE STATEMENT BY APPLICANT

(Use as many sheets as necessary)

Complete if Known	
Application Number	12/837,162
Filing Date	July 15, 2010
First Named Inventor	George Shu-Xing Cheng
Art Unit	2836
Examiner Name	Daniel J. Cavallari
Attorney Docket Number	350809-000003

U. S. PATENT DOCUMENTS

Examiner Initials*	Cite No.	Document Number Number-Kind Code	Publication Date MM-DD-YYYY	Name of Patentee or Applicant of Cited Document	Pages, Columns, Lines, Where Relevant Passages or Relevant Figures Appear
		US -2011/0012430	1/20/11	Cheng	
		US -2010/0202177	8/12/10	Kajouke	
		US -2009/0000654	1/1/2009	Rotzoll	
		US -			
		US -			
		US -			
		US -			
		US -			

FOREIGN PATENT DOCUMENTS

Examiner Initials*	Cite No.[1]	Foreign Patent Document Country Code[2] Number[4] Kind Code[5] (if known)	Publication Date MM-DD-YYYY	Name of Patentee or Applicant of Cited Document	Pages, Columns, Lines, Where Relevant Passages or Relevant Figures Appear	T[3]

NON PATENT LITERATURE DOCUMENTS

Examiner Initials*	Cite No.[1]	Include name of the author (in CAPITAL LETTERS), title of the article (when appropriate), title of the item (book, magazine, journal, serial, symposium, catalog, etc.), date, page(s), volume-issue number(s), publisher, city and/or country where published.	T[2]
		International Search Report and Written Opinion issued in PCT/US2012/041923 on January 17, 2013	
		Image file Wrapper of related U.S. Application 13/397,407 electronically captured on April 17, 2013	

Examiner Signature	/Daniel Cavallari/	Date Considered	06/02/2013

*EXAMINER: Initial if reference considered, whether or not citation is in conformance with MPEP 609. Draw line through citation if not in conformance and not considered. Include copy of this form with next communication to applicant.

EAST\55612214.1

ALL REFERENCES CONSIDERED EXCEPT WHERE LINED THROUGH. /D.C./

PTO/SB/08a (08-03)
Approved for use through 07/31/2006. OMB 0651-0031
U.S. Patent and Trademark Office; U.S. DEPARTMENT OF COMMERCE
Under the Paperwork Reduction Act of 1995, no persons are required to respond to a collection of information unless it contains a valid OMB control number.

Substitute for form 1449A/PTO

INFORMATION DISCLOSURE STATEMENT BY APPLICANT

(Use as many sheets as necessary)

Complete if Known	
Application Number	12/837,162
Filing Date	July 15, 2010
First Named Inventor	George Shu-Xing Cheng
Art Unit	2836
Examiner Name	Daniel J. Cavallari
Attorney Docket Number	350809-000003

U. S. PATENT DOCUMENTS

Examiner Initials*	Cite No.	Document Number Number-Kind Code	Publication Date MM-DD-YYYY	Name of Patentee or Applicant of Cited Document	Pages, Columns, Lines, Where Relevant Passages or Relevant Figures Appear
		US -			
		US -			
		US -			
		US -			
		US -			
		US -			
		US -			
		US -			

FOREIGN PATENT DOCUMENTS

Examiner Initials*	Cite No.[1]	Foreign Patent Document Country Code[3] Number[4] Kind Code[5] (if known)	Publication Date MM-DD-YYYY	Name of Patentee or Applicant of Cited Document	Pages, Columns, Lines, Where Relevant Passages or Relevant Figures Appear	T[8]

NON PATENT LITERATURE DOCUMENTS

Examiner Initials*	Cite No.[1]	Include name of the author (in CAPITAL LETTERS), title of the article (when appropriate), title of the item (book, magazine, journal, serial, symposium, catalog, etc.), date, page(s), volume-issue number(s), publisher, city and/or country where published.	T[2]
		R. Jones. "The Measurement of Lumped Parameter Impedence: A Metrology Guide," University of Michigan, January 1974.	
		International Preliminary Report on Patentability issued in PCT/US2010/042123 on January 26, 2012.	
		Image File Wrapper of related U.S. Application No. 13/397,402 electronically captured on June 15, 2012.	
		Image File Wrapper of related U.S. Application No. 13/493,622 electronically captured on June 15, 2012.	

Examiner Signature	/Daniel Cavallari/	Date Considered	06/02/2013

*EXAMINER: Initial if reference considered, whether or not citation is in conformance with MPEP 609. Draw line through citation if not in conformance and not considered. Include copy of this form with next communication to applicant.

IN THE UNITED STATES PATENT AND TRADEMARK OFFICE

IN RE APPLICATION:	George Shu-Xing Cheng	Conf. No.	3679
SERIAL NUMBER:	12/837,162	Group:	2836
FILED:	July 15, 2010	Examiner:	Daniel J. Cavakkari
FOR:	SMART AND SCALABLE POWER INVERTERS		

LIST OF RELATED CASES

Serial Number	Publication Number	Filing or Publication Date	Status
13/397,402	US 2012-0212065 A1	August 23, 2012	Pending
13/493,622	US 2012-0313443 A1	December 13, 2012	Pending
13/789,637	N/A	March 7, 2013	Pending
13/844,484	N/A	March 15, 2013	Pending
13/846,708	N/A	March 18, 2013	Pending

The cases listed on this Notice of Related Cases include cases which may contain information that is material to patentability. The listing of a case on this Notice should not be taken as an indication or admission that any information contained therein is material. Prior art for each case listed on this Notice may have been cited. **The files corresponding to the listed cases, which are available to the Examiner, may not have been examined to ascertain the materiality of any prior art therein.** Accordingly, the Examiner is requested to review the file for each case listed on this Notice in order to assess the materiality of such prior art.

Respectfully submitted,

DLA PIPER LLP US

Dale S. Lazar

P.O. Box 2758
Reston, VA 20195
Tel. 703.773.4000
Fax (703) 773-5200

Reg. No. 28,872
Attorney of Record
Date: April 17, 2013

EAST Search History

EAST Search History (Prior Art)

Ref #	Hits	Search Query	DBs	Default Operator	Plurals	Time Stamp
L1	70	("20020073713" | "20040264225" | "20080111517" | "5903116" | "6325142" | "6381944" | "20100202177" | "20110012430" | "6360131" | "20020166324" | "6958550" | "20020099476" | "6192668" | "6265786" | "6495929" | "20010052704" | "20040103669" | "6487096" | "6960840" | "6556980" | "20090159113" | "6612112" | "20090000654" | "7016743" | "20040119291" | "20090160258" | "6031294" | "6055524" | "7152052" | "7415446" | "20030007369" | "6784565" | "6870279" | "6684112" | "6684115" | "7142626" | "20040135436").PN.	US-PGPUB; USPAT; USOCR; FPRS; EPO; JPO; DERWENT; IBM_TDB	OR	ON	2013/06/02 14:53
L2	0	1 and (daiseychain daisey$chain)	US-PGPUB; USPAT; USOCR; FPRS; EPO; JPO; DERWENT; IBM_TDB	OR	ON	2013/06/02 14:54
L3	0	1 and (daisychain daisy$chain)	US-PGPUB; USPAT; USOCR; FPRS; EPO; JPO; DERWENT; IBM_TDB	OR	ON	2013/06/02 14:54
L5	1791	(inverter converter) and (daisychain daisy$chain)	US-PGPUB; USPAT; USOCR; FPRS; EPO; JPO; DERWENT; IBM_TDB	OR	ON	2013/06/02 14:55
L6	132	(inverter converter) same (daisychain daisy$chain)	US-PGPUB; USPAT; USOCR; FPRS; EPO; JPO; DERWENT; IBM_TDB	OR	ON	2013/06/02 15:00
L7	857	307/82.ccls.	US-PGPUB; USPAT; USOCR; FPRS; EPO; JPO; DERWENT; IBM_TDB	OR	ON	2013/06/02 16:09

EAST Search History (Interference)

<This search history is empty>

6/2/2013 4:10:23 PM
H:\East\Workspaces\12837162.wsp

Search Notes	Application/Control No.	Applicant(s)/Patent Under Reexamination
	12837162	CHENG ET AL.
	Examiner	**Art Unit**
	DANIEL CAVALLARI	2836

CPC- SEARCHED		
Symbol	**Date**	**Examiner**

CPC COMBINATION SETS - SEARCHED		
Symbol	**Date**	**Examiner**

US CLASSIFICATION SEARCHED			
Class	**Subclass**	**Date**	**Examiner**
307	82	6/2/2013	DJC

SEARCH NOTES		
Search Notes	**Date**	**Examiner**
EAST search	6/2/2013	DJC

INTERFERENCE SEARCH			
US Class/ CPC Symbol	**US Subclass / CPC Group**	**Date**	**Examiner**

PTO/SB/08a (08-03)
Approved for use through 07/31/2006. OMB 0651-0031
U.S. Patent and Trademark Office; U.S. DEPARTMENT OF COMMERCE
Under the Paperwork Reduction Act of 1995, no persons are required to respond to a collection of information unless it contains a valid OMB control number.

Substitute for form 1449A/PTO

INFORMATION DISCLOSURE STATEMENT BY APPLICANT

(Use as many sheets as necessary)

Complete if Known	
Application Number	12/837,162
Filing Date	July 15, 2010
First Named Inventor	George Shu-Xing Cheng
Art Unit	2838
Examiner Name	Unknown
Attorney Docket Number	350809-000003

U. S. PATENT DOCUMENTS

Examiner Initials*	Cite No.	Document Number Number-Kind Code	Publication Date MM-DD-YYYY	Name of Patentee or Applicant of Cited Document	Pages, Columns, Lines, Where Relevant Passages or Relevant Figures Appear
		US -2003/7369	1/9/2003	Gilbreth	
		US -2009-160258	6/25/2009	James	
		US -2009-159113	6/25/2009	Keiji	
		US -2008-111517	5/15/2008	Pfeifer	
		US -2004-264225	12/30/2004	Bhavaraju	
		US -2001-52704	12/20/2001	Bosley	
		US -2001/52704	12/20/2001	Bosley	
		US -2002/73713	6/20/2002	Mackay	
		US -2002/99476	7/25/2002	Hamrin	
		US -2002/166324	11/14/2002	Willis	
		US -2004/103669	6/3/2004	Willis	
		US -2004/119291	6/24/2004	Hamrin	
		US -2004/135436	7/15/2004	Gilbreth	
		US -5,903,116	5/11/1999	GEIS	
		US -6,031,294	2/29/2000	GEIS	
		US -6,192,668	2/27/2001	MACKAY	
		US -6,265,786	7/24/2001	BOSLEY	
		US -6,325,142	12/4/2001	BOSLEY	
		US -6,381,944	5/7/2002	Mackay	
		US -6,487,096	11/26/2002	GILBRETH	
		US -6,495,929	12/17/2002	Bosley	
		US -6,612,112	9/2/2003	Gilbreth	
		US -6,784,565	8/31/2004	Wall	
		US -6,870,279	3/22/2005	Gilbreth	
		US -6,958,550	10/25/2005	Gilbreth	
		US -6,960,840	11/1/2005	Willis	
		US -2008/111517	5/15/2008	Pfeifer	

FOREIGN PATENT DOCUMENTS

Examiner Initials*	Cite No.[1]	Foreign Patent Document Country Code[3] Number[4] Kind Code[5] *(if known)*	Publication Date MM-DD-YYYY	Name of Patentee or Applicant of Cited Document	Pages, Columns, Lines, Where Relevant Passages or Relevant Figures Appear	T[6]

 ALL REFERENCES CONSIDERED EXCEPT WHERE LINED THROUGH. /D.C./

PTO/SB/08a (08-03)
Approved for use through 07/31/2006. OMB 0651-0031
U.S. Patent and Trademark Office; U.S. DEPARTMENT OF COMMERCE
Under the Paperwork Reduction Act of 1995, no persons are required to respond to a collection of information unless it contains a valid OMB control number.

Substitute for form 1449A/PTO

INFORMATION DISCLOSURE STATEMENT BY APPLICANT

(Use as many sheets as necessary)

Complete if Known	
Application Number	12/837,162
Filing Date	July 15, 2010
First Named Inventor	George Shu-Xing Cheng
Art Unit	2838
Examiner Name	Unknown
Attorney Docket Number	350809-000003

NON PATENT LITERATURE DOCUMENTS			
Examiner Initials*	Cite No.[1]	Include name of the author (in CAPITAL LETTERS), title of the article (when appropriate), title of the item (book, magazine, journal, serial, symposium, catalog, etc.), date, page(s), volume-issue number(s), publisher, city and/or country where published.	T[2]
		Maniktala, Sanjaya., "Switching Power Supplies A to Z," Elsevier, 2006.	
		International Search Report issued in PCT/US2010/042123 mailed February 22, 2011	
		Written Opinion issued in PCT/US2010/042123 mailed February 22, 2011	
Examiner Signature		Date Considered	06/02/2013

/Daniel Cavallari/

•EXAMINER: Initial if reference considered, whether or not citation is in conformance with MPEP 609. Draw line through citation if not in conformance and not considered. Include copy of this form with next communication to applicant.

EAST\45128856.1 ALL REFERENCES CONSIDERED EXCEPT WHERE LINED THROUGH. /D.C./

PTO/SB/08a (08-03)
Approved for use through 07/31/2006. OMB 0651-0031
U.S. Patent and Trademark Office; U.S. DEPARTMENT OF COMMERCE
Under the Paperwork Reduction Act of 1995, no persons are required to respond to a collection of information unless it contains a valid OMB control number.

Substitute for form 1449A/PTO

INFORMATION DISCLOSURE STATEMENT BY APPLICANT

(Use as many sheets as necessary)

Complete if Known	
Application Number	12/837,162
Filing Date	July 15, 2010
First Named Inventor	George Shu-Xing Cheng
Art Unit	2836
Examiner Name	Daniel J. Cavallari
Attorney Docket Number	350809-000003

U. S. PATENT DOCUMENTS

Examiner Initials*	Cite No.	Document Number Number-Kind Code	Publication Date MM-DD-YYYY	Name of Patentee or Applicant of Cited Document	Pages, Columns, Lines, Where Relevant Passages or Relevant Figures Appear
		US -2011/0012430	1/20/11	Cheng	
		US -2010/0202177	8/12/10	Kajouke	
		US -2009/0000654	1/1/2009	Rotzoll	
		US -			
		US -			
		US -			
		US -			
		US -			

FOREIGN PATENT DOCUMENTS

Examiner Initials*	Cite No.[1]	Foreign Patent Document Country Code[2] Number[4] Kind Code[5] *(if known)*	Publication Date MM-DD-YYYY	Name of Patentee or Applicant of Cited Document	Pages, Columns, Lines, Where Relevant Passages or Relevant Figures Appear	T[3]

NON PATENT LITERATURE DOCUMENTS

Examiner Initials*	Cite No.[1]	Include name of the author (in CAPITAL LETTERS), title of the article (when appropriate), title of the item (book, magazine, journal, serial, symposium, catalog, etc.), date, page(s), volume-issue number(s), publisher, city and/or country where published.	T[2]
		International Search Report and Written Opinion issued in PCT/US2012/041923 on January 17, 2013	
		Image file Wrapper of related U.S. Application 13/397,407 electronically captured on April 17, 2013	

Examiner Signature		Date Considered	

*EXAMINER: Initial if reference considered, whether or not citation is in conformance with MPEP 609. Draw line through citation if not in conformance and not considered. Include copy of this form with next communication to applicant.

Docket No.: 350809-000003

IN THE UNITED STATES PATENT AND TRADEMARK OFFICE

IN RE APPLICATION:	George Shu-Xing Cheng	Conf. No.	3679
SERIAL NUMBER:	12/837,162	Group:	2836
FILED:	July 15, 2010	Examiner:	Daniel J. Cavakkari
FOR:	SMART AND SCALABLE POWER INVERTERS		

LIST OF RELATED CASES

Serial Number	Publication Number	Filing or Publication Date	Status
13/397,402	US 2012-0212065 A1	August 23, 2012	Pending
13/493,622	US 2012-0313443 A1	December 13, 2012	Pending
13/789,637	N/A	March 7, 2013	Pending
13/844,484	N/A	March 15, 2013	Pending
13/846,708	N/A	March 18, 2013	Pending

The cases listed on this Notice of Related Cases include cases which may contain information that is material to patentability. The listing of a case on this Notice should not be taken as an indication or admission that any information contained therein is material. Prior art for each case listed on this Notice may have been cited. **The files corresponding to the listed cases, which are available to the Examiner, may not have been examined to ascertain the materiality of any prior art therein.** Accordingly, the Examiner is requested to review the file for each case listed on this Notice in order to assess the materiality of such prior art.

Respectfully submitted,

DLA PIPER LLP US

Dale S. Lazar

P.O. Box 2758
Reston, VA 20195
Tel. 703.773.4000
Fax (703) 773-5200

Reg. No. 28,872
Attorney of Record
Date: April 17, 2013

EAST\55612214.1

PATENT COOPERATION TREATY

From the INTERNATIONAL SEARCHING AUTHORITY

To:

LAZAR DALE S.

DLA PIPER LLP US P.O. BOX 2758 RESTON VA 20195
USA

PCT

NOTIFICATION OF TRANSMITTAL OF THE INTERNATIONAL SEARCH REPORT AND THE WRITTEN OPINION OF THE INTERNATIONAL SEARCHING AUTHORITY, OR THE DECLARATION

(PCT Rule 44.1)

	Date of mailing *(day/month/year)* 17 JANUARY 2013 (17.01.2013)
Applicant's or agent's file reference 350809-~~PCT~~-000018	**FOR FURTHER ACTION** See paragraphs 1 and 4 below
International application No. **PCT/US2012/041923**	International filing date *(day/month/year)* **11 JUNE 2012 (11.06.2012)** FEB - 6 2013
Applicant **CYBOENERGY, INC. et al**	

DOCKETED

mc 2.6.13

Art 19 Amdt 3.17.13

1. ☒ The applicant is hereby notified that the international search report and the written opinion of the International Searching Authority have been established and are transmitted herewith.
Filing of amendments and statement under Article 19:
The applicant is entitled, if he so wishes, to amend the claims of the international application (see Rule 46):
When? The time limit for filing such amendments is normally two months from the date of transmittal of the international search report.
Where? Directly to the International Bureau of WIPO, 34 chemin des Colombettes 1211 Geneva 20, Switzerland, Facsimile No.: +41 22 338 82 70
For more detailed instructions, see *PCT Applicant's Guide*, International Phase, paragraphs 9.004 . 9.011.

2. ☐ The applicant is hereby notified that no international search report will be established and that the declaration under Article 17(2)(a) to that effect and the written opinion of the International Searching Authority are transmitted herewith.

3. ☐ **With regard to any protest** against payment of (an) additional fee(s) under Rule 40.2, the applicant is notified that:
☐ the protest together with the decision thereon has been transmitted to the International Bureau together with any request to forward the texts of both the protest and the decision thereon to the designated Offices.
☐ no decision has been made yet on the protest; the applicant will be notified as soon as a decision is made.

4. **Reminders**
The applicant may submit comments on an informal basis on the written opinion of the International Searching Authority to the International Bureau. The International Bureau will send a copy of such comments to all designated Offices unless an international preliminary examination report has been or is to be established. Following the expiration of 30 months from the priority date, these comments will also be made available to the public.

Shortly after the expiration of **18 months** from the priority date, the international application will be published by the International Bureau. If the applicant wishes to avoid or postpone publication, a notice of withdrawal of the international application, or of the priority claim, must reach the International Bureau before the completion of the technical preparations for international publication (Rules 90bis.1 and 90bis.3).

Within **19 months** from the priority date, but only in respect of some designated Offices, a demand for international preliminary examination must be filed if the applicant wishes to postpone the entry into the national phase **until 30 months** from the priority date (in some Offices even later); otherwise, the applicant must, **within 20 months** from the priority date, perform the prescribed acts for entry into the national phase before those designated Offices.
In respect of other designated Offices, the time limit of **30 months** (or later) will apply even if no demand is filed within 19months.

For details about the applicable time limits, Office by Office, see www.wipo.int/pct/en/texts/time_limits.html and the PCT Applicant's Guide, National Chapters.

Name and mailing address of the ISA/KR Korean Intellectual Property Office 189 Cheongsa-ro, Seo-gu, Daejeon Metropolitan City, 302-701, Republic of Korea Facsimile No. 82-42-472-7140	Authorized officer COMMISSIONER Telephone No. 82-42-481-8753

Form PCT/ISA/220 (July 2010)

* Attention

Copies of the documents cited in the international search report can be searched in the following Korean Intellectual Property Office English website for three months from the date of mailing of the international search report.

http://www.kipo.go.kr/en/ => PCT Services => PCT Services

ID : PCT international application number
PW : **64NH4878**

Inquiries related to PCT International Search Report or Written Opinion prepared by KIPO as an International Searching Authority can be answered not only by KIPO but also through IPKC (Intellectual Property Korea Center), located in Vienna, VA, which functions as a PCT Help Desk for PCT applicants.

Homepage: http://www.ipkcenter.com
Email: ipkc@ipkcenter.com
Phone: +1 703 388 1066
Fax: +1 703 388 1084

PATENT COOPERATION TREATY

PCT

INTERNATIONAL SEARCH REPORT

(PCT Article 18 and Rules 43 and 44)

Applicant's or agent's file reference 350809-PCT	**FOR FURTHER ACTION**	see Form PCT/ISA/220 as well as, where applicable, item 5 below.
International application No. **PCT/US2012/041923**	International filing date *(day/month/year)* **11 JUNE 2012 (11.06.2012)**	(Earliest) Priority Date *(day/month/year)* 10 JUNE 2011 (10.06.2011)
Applicant **CYBOENERGY, INC. et al**		

This International search report has been prepared by this International Searching Authority and is transmitted to the applicant according to Article 18. A copy is being transmitted to the International Bureau.

This international search report consists of a total of 4 sheets.

☐ It is also accompanied by a copy of each prior art document cited in this report.

1. **Basis of the report**
   a. With regard to the **language**, the international search was carried out on the basis of:
      ☒ the international application in the language in which it was filed
      ☐ a translation of the international application into _____, which is the language of a translation furnished for the purposes of international search (Rules 12.3(a) and 23.1(b))
   b. ☐ This international search report has been established taking into account the **rectification of an obvious mistake** authorized by or notified to this Authority under Rule 91 (Rule 43.6*bis*(a)).
   c. ☐ With regard to any **nucleotide and/or amino acid sequence** disclosed in the international application, see Box No. I.
2. ☐ **Certain claims were found unsearchable** (See Box No. II)
3. ☐ **Unity of invention is lacking** (See Box No. III)
4. With regard to the **title,**
   ☒ the text is approved as submitted by the applicant.
   ☐ the text has been established by this Authority to read as follows:
5. With regard to the **abstract,**
   ☒ the text is approved as submitted by the applicant.
   ☐ the text has been established, according to Rule 38.2, by this Authority as it appears in Box No. IV. The applicant may, within one month from the date of mailing of this international search report, submit comments to this Authority.
6. With regard to the drawings,
   a. the figure of the **drawings** to be published with the abstract is Figure No. 2
      ☐ as suggested by the applicant.
      ☒ as selected by this Authority, because the applicant failed to suggest a figure.
      ☐ as selected by this Authority, because this figure better characterizes the invention.
   b. ☐ none of the figure is to be published with the abstract.

INTERNATIONAL SEARCH REPORT

International application No.
PCT/US2012/041923

A. CLASSIFICATION OF SUBJECT MATTER

H02J 3/36(2006.01)i, H02M 7/49(2007.01)i

According to International Patent Classification (IPC) or to both national classification and IPC

B. FIELDS SEARCHED

Minimum documentation searched (classification system followed by classification symbols)
H02J 3/36; H02M 7/537; H02M 7/42; H02J 3/38; G05F 1/10; H02J 3/00; H01L 31/042

Documentation searched other than minimum documentation to the extent that such documents are included in the fields searched
Korean utility models and applications for utility models
Japanese utility models and applications for utility models

Electronic data base consulted during the international search (name of data base and, where practicable, search terms used)
eKOMPASS(KIPO internal) & Keywords: inverter, daisy chain, photovoltaic, scalable

C. DOCUMENTS CONSIDERED TO BE RELEVANT

Category*	Citation of document, with indication, where appropriate, of the relevant passages	Relevant to claim No.
Y A	US 2011-0012430 A1 (CHENG GEORGE SHU-XING et al.) 20 January 2011 See claims 21-28 and figures 1-16	12,13,16-18 1-11,14,15,19-22
Y A	US 2010-0202177 A1 (KAJOUKE LATEEF A. et al.) 12 August 2010 See abstract, claim 1 and figure 1.	12,13,16-18 1-11,14,15,19-22
A	US 2009-0000654 A1 (ROTZOLL ROBERT R. et al.) 01 January 2009 See abstract, claims 1-6, and figures 3-9.	1-22
A	WO 2008-144554 A2 (LARANKELO, INC. et al.) 27 November 2008 See paragraphs[0003],[0013],[0044], claims 1,3,10,11, and figures 4-15.	1-22

☐ Further documents are listed in the continuation of Box C. ☒ See patent family annex.

* Special categories of cited documents:
"A" document defining the general state of the art which is not considered to be of particular relevance
"E" earlier application or patent but published on or after the international filing date
"L" document which may throw doubts on priority claim(s) or which is cited to establish the publication date of citation or other special reason (as specified)
"O" document referring to an oral disclosure, use, exhibition or other means
"P" document published prior to the international filing date but later than the priority date claimed
"T" later document published after the international filing date or priority date and not in conflict with the application but cited to understand the principle or theory underlying the invention
"X" document of particular relevance; the claimed invention cannot be considered novel or cannot be considered to involve an inventive step when the document is taken alone
"Y" document of particular relevance; the claimed invention cannot be considered to involve an inventive step when the document is combined with one or more other such documents,such combination being obvious to a person skilled in the art
"&" document member of the same patent family

Date of the actual completion of the international search	Date of mailing of the international search report
16 JANUARY 2013 (16.01.2013)	**17 JANUARY 2013 (17.01.2013)**
Name and mailing address of the ISA/KR Korean Intellectual Property Office 189 Cheongsa-ro, Seo-gu, Daejeon Metropolitan City, 302-701, Republic of Korea Facsimile No. 82-42-472-7140	Authorized officer Kwak In Gu Telephone No. 82-42-481-8537

Form PCT/ISA/210 (second sheet) (July 2009)

INTERNATIONAL SEARCH REPORT
Information on patent family members

International application No.
PCT/US2012/041923

Patent document cited in search report	Publication date	Patent family member(s)	Publication date
US 2011-0012430 A1	20.01.2011	CA 2767867 A1	20.01.2011
		CN 102549873 A	04.07.2012
		EP 2454796 A2	23.05.2012
		KR 10-2012-0086283 A	02.08.2012
		WO 2011-008944 A2	20.01.2011
		WO 2011-008944 A3	28.04.2011
		WO 2011-008944 A3	20.01.2011
		WO 2011-008944 A4	16.06.2011
		WO 2011-008944 A4	20.01.2011
US 2010-0202177 A1	12.08.2010	CN 101355320 A	28.01.2009
		DE 102008034357 A1	20.05.2009
		US 2009-0027933 A1	29.01.2009
		US 7728562 B2	01.06.2010
US 2009-0000654 A1	01.01.2009	AU 2008-254814 A1	27.11.2008
		AU 2008-254814 B2	07.04.2011
		AU 2008-254822 A1	27.11.2008
		AU 2008-254828 A1	27.11.2008
		CA 2686272 A1	27.11.2008
		EP 2149183 A2	03.02.2010
		EP 2151035 A1	10.02.2010
		EP 2151036 A2	10.02.2010
		JP 2010-527570 A	12.08.2010
		JP 2010-527571 A	12.08.2010
		JP 2010-527572 A	12.08.2010
		KR 10-2010-0017834 A	16.02.2010
		KR 10-2010-0017843 A	16.02.2010
		KR 10-2010-0017853 A	16.02.2010
		US 2008-0283118 A1	20.11.2008
		US 2008-0285317 A1	20.11.2008
		WO 2008-144540 A1	27.11.2008
		WO 2008-144548 A2	27.11.2008
		WO 2008-144548 A3	27.11.2008
		WO 2008-144554 A2	27.11.2008
		WO 2008-144554 A3	27.11.2008
WO 2008-144554 A2	27.11.2008	AU 2008-254814 A1	27.11.2008
		AU 2008-254814 B2	07.04.2011
		AU 2008-254822 A1	27.11.2008
		AU 2008-254828 A1	27.11.2008
		CA 2686272 A1	27.11.2008
		CA 2691967 A1	27.11.2008
		CA 2692602 A1	27.11.2008
		EP 2149183 A2	03.02.2010
		EP 2151035 A1	10.02.2010
		EP 2151036 A2	10.02.2010
		JP 2010-527570 A	12.08.2010
		JP 2010-527571 A	12.08.2010

INTERNATIONAL SEARCH REPORT
Information on patent family members

International application No.
PCT/US2012/041923

Patent document cited in search report	Publication date	Patent family member(s)	Publication date
		JP 2010-527572 A	12.08.2010
		KR 10-2010-0017834 A	16.02.2010
		KR 10-2010-0017843 A	16.02.2010
		KR 10-2010-0017853 A	16.02.2010
		US 2008-0283118 A1	20.11.2008
		US 2008-0285317 A1	20.11.2008
		US 2009-0000654 A1	01.01.2009
		WO 2008-144540 A1	27.11.2008
		WO 2008-144548 A2	27.11.2008
		WO 2008-144548 A3	27.11.2008
		WO 2008-144554 A3	27.11.2008

PATENT COOPERATION TREATY

From the
INTERNATIONAL SEARCHING AUTHORITY

To:
LAZAR DALE S.

DLA PIPER LLP US P.O. BOX 2758 RESTON VA 20195
USA

PCT

WRITTEN OPINION OF THE INTERNATIONAL SEARCHING AUTHORITY

(PCT Rule 43bis.1)

Date of mailing *(day/month/year)* **17 JANUARY 2013 (17.01.2013)**

Applicant's or agent's file reference
350809-PCT

FOR FURTHER ACTION
See paragraph 2 below

International application No.	International filing date *(day/month/year)*	Priority date *(day/month/year)*
PCT/US2012/041923	**11 JUNE 2012 (11.06.2012)**	10 JUNE 2011 (10.06.2011)

International Patent Classification (IPC) or both national classification and IPC

H02J 3/36(2006.01)i, H02M 7/49(2007.01)i

Applicant

CYBOENERGY, INC. et al

FEB 6 2013
DOCKETED

Resp Written Opinion

mc 2.6.13
4.17.13

1. This opinion contains indications relating to the following items:

- [X] Box No. I Basis of the opinion
- [ ] Box No. II Priority
- [ ] Box No. III Non-establishment of opinion with regard to novelty, inventive step and industrial applicability
- [ ] Box No. IV Lack of unity of invention
- [X] Box No. V Reasoned statement under Rule 43bis.1(a)(i) with regard to novelty, inventive step or industrial applicability; citations and explanations supporting such statement
- [ ] Box No. VI Certain documents cited
- [ ] Box No. VII Certain defects in the international application
- [ ] Box No. VIII Certain observations on the international application

2. **FURTHER ACTION**

If a demand for international preliminary examination is made, this opinion will be considered to be a written opinion of the International Preliminary Examining Authority ("IPEA") except that this does not apply where the applicant chooses an Authority other than this one to be the IPEA and the chosen IPEA has notified the International Bureau under Rule 66.1bis(b) that written opinions of this International Searching Authority will not be so considered.

If this opinion is, as provided above, considered to be a written opinion of the IPEA, the applicant is invited to submit to the IPEA a written reply together, where appropriate, with amendments, before the expiration of 3 months from the date of mailing of Form PCT/ISA/220 or before the expiration of 22 months from the priority date, whichever expires later.
For further options, see Form PCT/ISA/220.

Name and mailing address of the ISA/KR	Date of completion of this opinion	Authorized officer
Korean Intellectual Property Office 189 Cheongsa-ro, Seo-gu, Daejeon Metropolitan City, 302-701, Republic of Korea Facsimile No. 82-42-472-7140	16 JANUARY 2013 (16.01.2013)	Kwak In Gu Telephone No.82-42-481-8537

Form PCT/ISA/237 (cover sheet) (July 2011)

WRITTEN OPINION OF THE INTERNATIONAL SEARCHING AUTHORITY

International application No.
PCT/US2012/041923

Box No. I Basis of this opinion

1. With regard to the **language**, this opinion has been established on the basis of:

   ☒ the international application in the language in which it was filed

   ☐ a translation of the international application into _____, which is the language of a translation furnished for the purposes of international search (Rules 12.3(a) and 23.1(b))

2. ☐ This opinion has been established taking into account the **rectification of an obvious mistake** authorized by or notified to this Authority under Rule 91 (Rule 43*bis*.1(a))

3. With regard to any **nucleotide and/or amino acid sequence** disclosed in the international application, this opinion has been established on the basis of:

   a. a sequence listing filed or furnished
      ☐ on paper
      ☐ in electronic form

   b. time of filing or furnishing
      ☐ contained in the international application as filed.
      ☐ filed together with the international application in electronic form.
      ☐ furnished subsequently to this Authority for the purposes of search.

4. ☐ In addition, in the case that more than one version or copy of a sequence listing has been filed or furnished, the required statements that the information in the subsequent or additioanl copies is identical to that in the application as filed or does not go beyond the application as filed, as appropriate, were furnished.

5. Additional comments:

WRITTEN OPINION OF THE INTERNATIONAL SEARCHING AUTHORITY

International application No.
PCT/US2012/041923

Box No. V Reasoned statement under Rule 43bis.1(a)(i) with regard to novelty, inventive step or industrial applicability; citations and explanations supporting such statement

1. Statement

Novelty (N)	Claims	1-22	YES
	Claims	NONE	NO
Inventive step (IS)	Claims	1-11,14-15,19-22	YES
	Claims	12-13,16-18	NO
Industrial applicability (IA)	Claims	1-22	YES
	Claims	NONE	NO

2. Citations and explanations :

Reference is made to the following documents:

D1: US 2011-0012430 A1 (CHENG GEORGE SHU-XING et al.) 20 January 2011
D2: US 2010-0202177 A1 (KAJOUKE LATEEF A. et al.) 12 August 2010

1. Novelty and Inventive step

1.1. Claim 1
The subject matter of claim 1 differs from these prior art document in that one of the power inverters in claim 1 includes a load detector connected to an internal AC powerline and external AC powerline, and arranged to detect the impedance of the connected AC load. And it is not obvious to a person skilled in the art by the documents, taken alone or in combination. Therefore, claim 1 meets the requirements of PCT Article 33(2) and (3) with respect to novelty and inventive step.

1.2. Claims 2-4
The subject matter of claim 2 differs from these prior art document in that one of the power inverters in claim 2 includes a load detector connected to an internal AC powerline and external AC powerline, and arranged to detect the impedance of the connected AC load. And it is not obvious to a person skilled in the art by the documents, taken alone or in combination. Therefore, claim 2 meets the requirements of PCT Article 33(2) and (3) with respect to novelty and inventive step.

Claims 3-4 are dependent on claim 2 and therefore meet the requirements of PCT Article 33(2) and (3).

1.3. Claim 5
The subject matter of claim 5 differs from these prior art document in that claim 5 includes a load detector connected to an internal AC powerline and external AC powerline, and arranged to detect the impedance of the connected AC load. And it is not obvious to a person skilled in the art by the documents, taken alone or in combination. Therefore, claim 5 meets the requirements of PCT Article 33(2) and (3) with respect to novelty and inventive step.

1.4. Claims 6,8-9, 21-22
The subject matter of claim 6 differs from these prior art document in that claim 6 includes a load detector connected to an internal AC powerline and external AC powerline, and arranged to detect the impedance of the connected AC load, and a power supply connected to a DC power combiner and arranged to supply DC power to the electronic components of the power inverter. And it is not obvious to a person skilled in the art by the documents, taken alone or in combination. Therefore, claim 6 meets the requirements of PCT Article 33(2) and (3) with respect to novelty and inventive step.

Claims 8,9,21,22 are dependent on claim 6 and therefore meet the requirements of PCT Article 33(2) and (3).

(Continued on the Supplemental box.)

Supplemental Box

In case **the space in any of the preceding boxes is not sufficient.**
Continuation of:

Box No. V

1.5. Claim 7
The subject matter of claim 7 differs from these prior art document in that claim 7 includes a power supply connected to a DC power combiner and arranged to supply DC power to the electronic components of the power inverter. And it is not obvious to a person skilled in the art by the documents, taken alone or in combination. Therefore, claim 7 meets the requirements of PCT Article 33(2) and (3) with respect to novelty and inventive step.

1.6. Claim 10,11
The subject matter of claim 10 differs from these prior art document in that one of the power inverters in claim 10 includes a load detector connected to an internal AC powerline and external AC powerline, and arranged to detect the impedance of the connected AC load. And it is not obvious to a person skilled in the art by the documents, taken alone or in combination. Therefore, claim 10 meets the requirements of PCT Article 33(2) and (3) with respect to novelty and inventive step.

Claim 11 is dependent on claim 10 and therefore meets the requirements of PCT Article 33(2) and (3).

1. 7. Claims 12-15
D1, which is considered to be the closest prior art to the subject matter of claim 12, discloses a scalable DC to AC power inversion system comprising: a plurality of power inverters, a AC power output port, whereby the system is incrementally scalable by adding or subtracting DC power sources and daisy-chained inverters . Claim 12 differs from D1 in that the last inverter is connected to the AC load. The connection between the inverter and the AC load corresponds to the connection between the inverter and the AC load of D2. It would be obvious to a person skilled in the art to combine the features of D1 and D2, thereby arriving at the system of claim 12. Therefore, the subject matter of claim 12 cannot be considered as involving an inventive step under PCT Article 3.

The additional feature of claim 13 dependent on claim 12 corresponds to the feature of the output of each of the power inverters in claims 22, 23 of D2.

The subject matter of claim 14 differs from these prior art document in that one of the power inverters in claim 14 includes a power supply connected to a DC power combiner and arranged to supply DC power to the electronic components of the power inverter. And it is not obvious to a person skilled in the art by the documents, taken alone or in combination. Therefore, claim 14 meets the requirements of PCT Article 33(2) and (3) with respect to novelty and inventive step.

Claim 15 is dependent on claim 14 and therefore meets the requirements of PCT Article 33(2) and (3).

1. 8. Claims 16-20
Claim 16 is the same as claim 12 in the aspect of technical concept. Therefore, claim 16 lacks novelty under PCT Article 33(2).

The additional feature of claim 17 dependent on claim 16 corresponds to the feature of the daisy-chaining at least two of said inverters anc producing a total AC power in D2.

The additional feature of claim 18 dependent on claim 16 corresponds to the feature of the output of each of the power inverters in claims 22, 23 of D2.

(Continued on the Supplemental box.)

Supplemental Box

In case **the space in any of the preceding boxes is not sufficient.**
Continuation of:

The subject matter of claim 19 differs from these prior art document in that claim 19 includes a power supply connected to a DC power combiner and arranged to supply DC power to the electronic components of the power inverter. And it is not obvious to a person skilled in the art by the documents, taken alone or in combination. Therefore, claim 19 meets the requirements of PCT Article 33(2) and (3) with respect to novelty and inventive step.

Claim 20 is dependent on claim 19 and therefore meets the requirements of PCT Article 33(2) and (3).

Electronic Acknowledgement Receipt

EFS ID:	15539607
Application Number:	12837162
International Application Number:	
Confirmation Number:	3679
Title of Invention:	SMART AND SCALABLE POWER INVERTERS
First Named Inventor/Applicant Name:	George Shu-Xing CHENG
Customer Number:	47604
Filer:	Dale S. Lazar/Ava M. Dixon
Filer Authorized By:	Dale S. Lazar
Attorney Docket Number:	350809-000003
Receipt Date:	17-APR-2013
Filing Date:	15-JUL-2010
Time Stamp:	12:53:47
Application Type:	Utility under 35 USC 111(a)

Payment information:

Submitted with Payment	no

File Listing:

Document Number	Document Description	File Name	File Size(Bytes)/ Message Digest	Multi Part /.zip	Pages (if appl.)
1		350809-000003_IDSApril172013.pdf	1665301 349a9d93f82c77f64286a12c4ad172c61afc3580	yes	5

	Multipart Description/PDF files in .zip description		
	Document Description	**Start**	**End**
	Transmittal Letter	1	3
	Information Disclosure Statement (IDS) Form (SB08)	4	4
	Transmittal Letter	5	5

Warnings:					
Information:					
2	Non Patent Literature	13397407IFWApril172013.pdf	2511598 bdc9c6bc0be383288194fcca5de8a6c1ddd0056c	no	75
Warnings:					
Information:					
3	Non Patent Literature	PCTUS2012041923ISRJanuary172013.pdf	1062995 28bab705f00d1b8ae732d47ec11d0713cfea3f8c	no	11
Warnings:					
Information:					
		Total Files Size (in bytes):	5239894		

This Acknowledgement Receipt evidences receipt on the noted date by the USPTO of the indicated documents, characterized by the applicant, and including page counts, where applicable. It serves as evidence of receipt similar to a Post Card, as described in MPEP 503.

<u>New Applications Under 35 U.S.C. 111</u>
If a new application is being filed and the application includes the necessary components for a filing date (see 37 CFR 1.53(b)-(d) and MPEP 506), a Filing Receipt (37 CFR 1.54) will be issued in due course and the date shown on this Acknowledgement Receipt will establish the filing date of the application.

<u>National Stage of an International Application under 35 U.S.C. 371</u>
If a timely submission to enter the national stage of an international application is compliant with the conditions of 35 U.S.C. 371 and other applicable requirements a Form PCT/DO/EO/903 indicating acceptance of the application as a national stage submission under 35 U.S.C. 371 will be issued in addition to the Filing Receipt, in due course.

<u>New International Application Filed with the USPTO as a Receiving Office</u>
If a new international application is being filed and the international application includes the necessary components for an international filing date (see PCT Article 11 and MPEP 1810), a Notification of the International Application Number and of the International Filing Date (Form PCT/RO/105) will be issued in due course, subject to prescriptions concerning national security, and the date shown on this Acknowledgement Receipt will establish the international filing date of the application.

Docket No.: 350809-000003

IN THE UNITED STATES PATENT AND TRADEMARK OFFICE

IN RE APPLICATION:	George Shu-Xing Cheng	Conf. No.	3679
SERIAL NUMBER:	12/837,162	Group:	2836
FILED:	July 15, 2010	Examiner:	Daniel J. Cavallari
FOR:	SMART AND SCALABLE POWER INVERTERS		

INFORMATION DISCLOSURE STATEMENT UNDER 37 C.F.R. 1.97

Commissioner for Patents
PO BOX 1450
ALEXANDRIA, VA 22313-1450

April 17, 2013

Sir:

Applicant(s) wish(es) to disclose the following information.

REFERENCES

☒ Applicant(s) wish(es) to make of record the documents listed on the attached Form PTO-1449. Copies of the listed documents are attached, where required, as are either statements of relevancy or any readily available full or partial English translations of any non-English-language documents.

EXPLANATION OF RELEVANCE

The documents listed on the attached Form PTO 1449 were cited in related and corresponding applications. English language abstracts and translations are provided for the convenience of the Examiner where available.

RELATED CASES

☒ Attached is a list of Applicant's(s') pending applications and issued patents which may be related to the present application. Copies of the documents, where required, are attached along with Form PTO-1449.

CERTIFICATION

The undersigned certifies that

☐ each item of information contained in this Information Disclosure Statement was first cited in any communication from a foreign or international patent office in a counterpart foreign or international application for the first time (to the knowledge of the undersigned, having made reasonable inquiry) not more than three months prior to the filing of this statement (See 37 CFR 1.97(e)(1)).

☐ no item of information contained in this Information Disclosure Statement was cited in a communication from a foreign or international patent office in a counterpart foreign or international application, and, to the knowledge of the undersigned, having made reasonable inquiry, was known to any individual designated in 37 C.F.R. 1.56(c) more than three months prior to the filing of this statement. (See 37 CFR 1.97(e)(2))

BASIS FOR CONSIDERATION

This Information Disclosure Statement is filed:

☐ without fee and within three months of the filing date of the application.
☐ without fee and within three months of the date of entry of the U.S. national stage.
☒ without fee and before the mailing date of a first Office Action on the merits (to the knowledge of the undersigned).
☐ without fee and with the appropriate certification above.
☐ without fee and with a new CPA application.
☐ without fee and with a Request for Continued Examination.
☐ with fee and before the mailing date of any Final Office Action, Notice of Allowance or an action that otherwise closes prosecution (to the knowledge of the undersigned).
☐ with fee, appropriate certification above, and before payment of the Issue Fee.

DEPOSIT ACCOUNT

☒ Please charge any additional fees for the papers being filed herewith, or credit any overpayment to Deposit Account No. 50-3266.

Respectfully submitted,

DLA PIPER LLP US

Dale S. Lazar
Registration No. 28,872
Attorney for Applicant

DSL/amd
P.O. Box 2758
Reston, VA 20195
Tel. 703.773.4000
Fax (703) 773-5200

DOCKET NO. 350809-000003 PATENT

IN THE UNITED STATES PATENT AND TRADEMARK OFFICE

In Re Application of:	George Shu-Xing Cheng	Confirmation No. 3679	
Application No.	12/837,162	Group Art Unit:	2836
Filed:	July 15, 2010	Examiner:	Daniel J. Cavallari
For:	SMART AND SCALABLE POWER INVERTERS		

AMENDMENT AND RESPONSE TO RESTRICTION REQUIREMENT

Commissioner for Patents
PO Box 1450
Alexandria, VA 22313-1450

January 28, 2013

Dear Sir:

This is in response to the Restriction Requirement dated December 26, 2012, and having a period for response set to expire on Saturday, January 26, 2013.

The following amendments and remarks are respectfully submitted. Reconsideration of the claims is respectfully requested.

Amendments to the Claims begin on page 2 of this paper.

Remarks/Arguments begin on page 13 of this paper.

Amendments to the Claims:

This listing of claims will replace all prior versions, and listings, of claims in the application. Currently amended claims are shown with additions underlined and deletions in ~~strikethrough text~~ except double brackets may be placed before and after the deleted characters to show deletion of five or fewer characters.

1. (Original) A system for providing AC power to a power grid from a plurality of individual DC power sources each having a DC power output port, comprising:

a) a plurality of power inverters, each of said power inverters having one DC power input port, an AC power input port, and an AC power output port, said DC power input port having one DC power source connected thereto;

b) said AC power output port of each inverter being connected in a daisy chain to the AC power input port of the next inverter, except for the AC power input port of the first inverter being left open, and the AC power output port of the last inverter being connected to a power service panel of the power grid;

c) each of said power inverters including:

i) a DC-DC boost converter connected to said DC power source and arranged to convert the power source voltage to a higher DC voltage suitable for inversion;

ii) a DC-AC inverter connected to said DC-DC boost converter and arranged to invert the DC power to AC power with voltage higher than the incoming AC power voltage;

iii) an internal AC powerline that combines the generated AC power with the external AC power from the power grid;

iv) a load interface circuit connected to said DC-AC inverter and to said internal AC powerline, said load interface circuit being arranged to filter high-frequency components out of the said DC-AC inverter's AC output;

v) an MFA microcontroller connected to said DC-DC boost converter, DC-AC inverter, and load interface circuit, said microcontroller arranged to monitor the

DC boost voltage, control the DC-DC boost converter, perform maximum power point tracking (MPPT), perform DC-AC inversion and AC power synchronization, monitor AC current and voltage for generated power amount and status, perform powerline communications, and perform logic controls such as AC powerline switching and isolation;

vi) a powerline modem connected to said microcontroller and said internal AC powerline through an interface circuitry for transmitting and receiving performance data between said microcontroller and said power grid;

vii) a line sensing circuit connected to said internal AC powerline and said microcontroller for detecting the phase and zero-crossing point of the incoming AC power from the power grid; and

viii) a solid state switch connected to said internal AC powerline and external AC powerline, and arranged to disconnect said internal AC powerline from the AC grid during the non-generation time.

2. (Original) The system of Claim 1, in which the output of each of said power inverters is single-phase AC.

3. (Original) The system of Claim 1, in which the output of each of said power inverters is three-phase AC.

4. (Original) The system of Claim 1, in which said MFA microcontroller includes Model-Free Adaptive (MFA) controllers which control the DC-DC boost converter, and MFA optimizers which provide maximum power point tracking (MPPT) to allow the power inverter to achieve optimal power production.

5. (Original) A system for providing AC power to a power grid from a plurality of individual DC power sources each having a DC power output port, comprising:

a) a plurality of power inverters, each of said power inverters having two DC power input ports, an AC power input port, and an AC power output port, each of said DC power input ports having one DC power source connected thereto;

b) said AC power output port of each inverter being connected in a daisy chain to the AC power input port of the next inverter, except for the AC power input port of the first inverter being left open, and the AC power output port of the last inverter being connected to a power service panel of the power grid;

c) each of said power inverters including:

i) a pair of DC-DC boost converters, one connected to each of said DC power sources, respectively, and arranged to convert the power source voltage to a higher DC voltage suitable for inversion;

ii) a DC power combiner connected to said DC-DC boost converters for combining the DC output from both DC-DC boost converters and allowing said DC-DC boost converters to connect in parallel so that all DC currents are added together;

iii) a DC-AC inverter connected to said DC power combiner and arranged to invert the DC power to AC power with voltage higher than the incoming AC power voltage;

iv) an internal AC powerline that combines the generated AC power with the external AC power from the power grid;

v) a load interface circuit connected to said DC-AC inverter and to said internal AC powerline, said load interface circuit being arranged to filter high-frequency components out of the said DC-AC inverter's AC output;

vi) an MFA microcontroller connected to said DC-DC boost converters, DC-AC inverter, and load interface circuit, said microcontroller arranged to monitor the DC boost voltage, control the DC-DC boost converter, perform maximum power point tracking (MPPT), perform DC-AC inversion and AC power synchronization, monitor AC current and voltage for generated power amount and status, perform powerline communications, and perform logic controls such as AC powerline switching and isolation;

vii) a powerline modem connected to said microcontroller and said internal AC powerline through an interface circuitry for transmitting and receiving performance data between said microcontroller and said power grid;

viii) a line sensing circuit connected to said internal AC powerline and said microcontroller for detecting the phase and zero-crossing point of the incoming AC power from the power grid; and

ix) a solid state switch connected to said internal AC powerline and external AC powerline, and arranged to disconnect said internal AC powerline from the AC grid during the non-generation time.

6. (Original) The system of Claim 5, in which the output of each of said power inverters is single-phase AC.

7. (Original) The system of Claim 5, in which the output of each of said power inverters is three-phase AC.

8. (Original) The system of Claim 5, in which said MFA microcontroller includes Model-Free Adaptive (MFA) controllers which control the DC-DC boost converters, and MFA optimizers which provide maximum power point tracking (MPPT) to allow the power inverter to achieve optimal power production.

9. (Original) A system for providing AC power to a power grid from a plurality of individual DC power sources each having a DC power output port, comprising:

a) a plurality of power inverters, each of said power inverters having m DC power input ports, where m is an integer greater than or equal to one, an AC power input port, and an AC power output port, each of said DC power input ports having one DC power source connected thereto;

b) said AC power output port of each inverter being connected in a daisy chain to the AC power input port of the next inverter, except for the AC power input port of the first inverter being left open, and the AC power output port of the last inverter being connected to a power service panel of the power grid;

c) each of said power inverters including:

i) m number of DC-DC boost converters, one connected to each of said DC power sources, respectively, and arranged to convert the power source voltage to a higher DC voltage suitable for inversion;

ii) a DC power combiner connected to said m number of DC-DC boost converters for combining the DC output from all DC-DC boost converters and allowing said DC-DC boost converters to connect in parallel so that all DC currents are added together;

iii) a DC-AC inverter connected to said DC power combiner and arranged to invert the DC power to AC power with voltage higher than the incoming AC power voltage;

iv) an internal AC powerline that combines the generated AC power with the external AC power from the power grid;

v) a load interface circuit connected to said DC-AC inverter and to said internal AC powerline, said load interface circuit being arranged to filter high-frequency components out of the said DC-AC inverter's AC output;

vi) an MFA microcontroller connected to said DC-DC boost converters, DC-AC inverter, and load interface circuit, said microcontroller arranged to monitor the DC boost voltage, control the DC-DC boost converter, perform maximum power point tracking (MPPT), perform DC-AC inversion and AC power synchronization, monitor AC current and voltage for generated power amount and status, perform powerline communications, and perform logic controls such as AC powerline switching and isolation;

vii) a powerline modem connected to said microcontroller and said internal AC powerline through an interface circuitry for transmitting and receiving performance data between said microcontroller and said power grid;

viii) a line sensing circuit connected to said internal AC powerline and said microcontroller for detecting the phase and zero-crossing point of the incoming AC power from the power grid; and

ix) a solid state switch connected to said internal AC powerline and external AC powerline, and arranged to disconnect said internal AC powerline from the AC grid during the non-generation time.

10. (Original) The system of Claim 9, in which the output of each of said power inverters is single-phase AC.

11. (Original) The system of Claim 9, in which the output of each of said power inverters is three-phase AC.

12. (Original) The system of Claim 9, in which said MFA microcontroller includes Model-Free Adaptive (MFA) controllers which control the DC-DC boost converters, and MFA optimizers which provide maximum power point tracking (MPPT) to allow the power inverter to achieve optimal power production.

13. (Withdrawn) A DC- to-AC power inverter, comprising:

a) one DC power input port having one DC power source connected thereto;

b) one AC power output port arranged to supply AC power to the AC power grid;

c) a DC-DC boost converter connected to said DC power source and arranged to convert the power source voltage to a higher DC voltage suitable for inversion;

d) a DC-AC inverter connected to said DC-DC boost converter and arranged to invert the DC power to AC power with voltage higher than the incoming AC power voltage;

e) an internal AC powerline that combines the generated AC power with the external AC power from the AC power grid;

f) a load interface circuit connected to said DC-AC inverter and to said internal AC powerline, said load interface circuit being arranged to filter high-frequency components out of the said DC-AC inverter's AC output;

g) an MFA microcontroller connected to said DC-DC boost converter, DC-AC inverter, and load interface circuit, said microcontroller arranged to monitor the DC boost voltage, control the DC-DC boost converter, perform maximum power point tracking (MPPT), perform DC-AC inversion and AC power synchronization, monitor AC current and voltage for generated power amount and status, perform powerline communications, and perform logic controls such as AC powerline switching and isolation;

h) a powerline modem connected to said microcontroller and said internal AC powerline through an interface circuitry for transmitting and receiving performance data between said microcontroller and said power grid;

i) a line sensing circuit connected to said internal AC powerline and said microcontroller for detecting the phase and zero-crossing point of the incoming AC power from the power grid; and

j) a solid state switch connected to said internal AC powerline and external AC powerline, and arranged to disconnect said internal AC powerline from the AC grid during the non-generation time.

14. (Withdrawn) The inverter of Claim 13, in which the output of said inverter is single-phase AC.

15. (Withdrawn) The inverter of Claim 13, in which the output of said inverter is three-phase AC.

16. (Withdrawn) The inverter of Claim 13, in which said MFA microcontroller includes Model-Free Adaptive (MFA) controllers which control the DC-DC boost converter, and MFA optimizers which provide maximum power point tracking (MPPT) to allow the power inverter to achieve optimal power production.

17. (Withdrawn) A DC- to-AC power inverter, comprising:

a) at least two DC power input ports, each of said DC power input ports having one DC power source connected thereto;

b) one AC power output port arranged to supply AC power to the AC power grid;

c) for each DC power source, a DC-DC boost converter connected to said DC power sources and arranged to convert the power source voltage to a higher DC voltage suitable for inversion;

d) a DC power combiner connected to said DC-DC boost converters for combining the DC output from all DC-DC boost converters and allowing the said DC-DC boost converters to connect in parallel so that all DC currents are added together;

e) a DC-AC inverter connected to said DC power combiner and arranged to invert the DC power to AC power with voltage higher than the incoming AC power voltage;

f) an internal AC powerline that combines the generated AC power with the external AC power from the power grid;

g) a load interface circuit connected to said DC-AC inverter and to said internal AC powerline, said load interface circuit being arranged to filter high-frequency components out of the said DC-AC inverter's AC output;

h) an MFA microcontroller connected to said DC-DC boost converters, DC-AC inverter, and load interface circuit, said microcontroller arranged to monitor the DC boost voltage, control the DC-DC boost converter, perform maximum power point tracking (MPPT), perform DC-AC inversion and AC power synchronization, monitor AC current and voltage for generated power amount and status, perform powerline communications, and perform logic controls such as AC powerline switching and isolation;

i) a powerline modem connected to said microcontroller and said internal AC powerline through an interface circuitry for transmitting and receiving performance data between said microcontroller and said power grid;

j) a line sensing circuit connected to said internal AC powerline and said microcontroller for detecting the phase and zero-crossing point of the incoming AC power from the power grid; and

k) a solid state switch connected to said internal AC powerline and external AC powerline, and arranged to disconnect said internal AC powerline from the AC grid during the non-generation time.

18. (Withdrawn) The inverter of Claim 17, in which the output of said inverter is single-phase AC.

19. (Withdrawn) The inverter of Claim 17, in which the output of said inverter is three-phase AC.

20. (Withdrawn) The inverter of Claim 17, in which said MFA microcontroller includes Model-Free Adaptive (MFA) controllers which control the DC-DC boost converters, and MFA optimizers which provide maximum power point tracking (MPPT) to allow the power inverter to achieve optimal power production.

21. (Original) A scalable DC to AC power inversion system for providing AC power to a power grid from a plurality of individual DC power sources each having a DC power output port, comprising:

a) a plurality of power inverters, each of said power inverters having at least one DC power input port, an AC power input port, and an AC power output port, each of said DC power input ports having one DC power source connected thereto;

b) said AC power output port of each inverter being connected in a daisy chain to the AC power input port of the next inverter, except for the AC power input port of the first inverter being left open, and the AC power output port of the last inverter being connected to a power service panel of the power grid;

c) whereby said system is incrementally scalable by adding or subtracting DC power sources and daisy-chained inverters; and

d) whereby an optimal amount of AC power is generated and supplied to said power grid regardless of the performance of any individual power source.

22. (Original) The system of Claim 21, in which the output of each of said power inverters is single-phase AC.

23. (Original) The system of Claim 21, in which the output of each of said power inverters is three-phase AC.

24. (Currently Amended) The system of Claim 9[[or 17]], in which the said MFA microcontroller is programmed with a main program to iteratively:

a) turn on and off the inverter's generation circuit based on the DC power source input and conditions of the inverter and AC powerline,

b) calculate the inverter's power statistics such as the amount of power generated during a certain period of time;

c) perform diagnostics for the inverter's status and operation;

d) set the inverter's unit address;

e) perform powerline communications; and

f) respond to queries from data gathering or acquisition devices to report the power statistics.

25. (Original) The system of Claim 24, in which said MFA microcontroller is further programmed with an interrupt service routine (ISR) to:

a) respond to an interrupt;

b) save the current context of the main program;

c) read voltage and current signals from the DC source, DC-DC boost converter, and DC-AC inverter;

d) read phase and zero-crossing point data of the AC powerline;

e) perform maximum power point tracking (MPPT) for each DC power source connected to the inverter;

f) perform DC-AC inversion and AC synchronization;

g) send out PWM control signals through the digital output ports; and

h) restore the saved context of the main program so that the execution of the main program can be resumed.

26. (Currently Amended) A method of making a DC to AC power conversion system incrementally scalable, comprising:

a) providing a plurality of DC power sources and a plurality of DC to AC power inverters, said inverters each having an AC input port, an AC output port, and at least one DC input port;

b) connecting at least one of said DC power sources, respectively, to at least one of said DC input ports; and

c) ~~daisy-chaining at least two of said inverters, said AC power output port of each inverter being connected in a daisy chain to the AC power input port of the next inverter, except for the AC power input port of the first inverter being left open, and the AC power output port of the last inverter being connected to a power service panel of the power grid; and~~

~~d) producing a total AC power that is the summation of the AC power supplied by each said inverter~~ providing AC power to the power grid.

27. (Original) The method of Claim 26, in which the output of each of said power inverters is single-phase AC.

28. (Original) The method of Claim 26, in which the output of each of said power inverters is three-phase AC.

29. (New) The method of claim 26 further comprising daisy-chaining at least two of said inverters, said AC power output port of each inverter being connected in a daisy chain to the AC power input port of the next inverter, except for the AC power input port of the first inverter being left open, and the AC power output port of the last inverter being connected to a power service panel of the power grid.

30. (New) The method of claim 26 where the providing of AC power includes producing a total AC power that is the summation of the AC power supplied by each said inverter.

Remarks/Arguments

In response to the Office Action dated December 26, 2012, Applicants elect Group I, drawn to a system for providing AC power, without traverse. The Office Action associates claims 1-12, 24 and 25 with this group. However, it is respectfully suggested that claims 1-12 and 21-30 should be associated with this group. Applicants reserve the right to file a divisional application on the non-elected claims. Applicants have amended claims 24 and 26 and have added new claims 29-30.

The application has been amended to place the application condition for allowance. All amendments are supported by the specification. An early notice of allowance is earnestly solicited.

Please charge any shortage in the fees or credit any overpayment to Deposit Account No. 50-3266.

Respectfully submitted,

DLA PIPER LLP US

Dale S. Lazar
Registration No. 28,872
Attorney for Applicant

DSL/amd
PO Box 2758
Reston, VA 20195
(703) 773.4000 Telephone
(703) 773.5200 Fax

Electronic Acknowledgement Receipt

EFS ID:	14810564
Application Number:	12837162
International Application Number:	
Confirmation Number:	3679
Title of Invention:	SMART AND SCALABLE POWER INVERTERS
First Named Inventor/Applicant Name:	George Shu-Xing CHENG
Customer Number:	47604
Filer:	Dale S. Lazar/Ava M. Dixon
Filer Authorized By:	Dale S. Lazar
Attorney Docket Number:	350809-000003
Receipt Date:	28-JAN-2013
Filing Date:	15-JUL-2010
Time Stamp:	17:03:00
Application Type:	Utility under 35 USC 111(a)

Payment information:

Submitted with Payment	no

File Listing:

Document Number	Document Description	File Name	File Size(Bytes)/ Message Digest	Multi Part /.zip	Pages (if appl.)
1		350809-000003_AmendmentResponseToRestriction.pdf	1221119 9105db34e69110b803a4195b1f31b5cf0b159e7b	yes	13

	Multipart Description/PDF files in .zip description		
	Document Description	**Start**	**End**
	Response to Election / Restriction Filed	1	1
	Claims	2	12
	Applicant Arguments/Remarks Made in an Amendment	13	13
Warnings:			
Information:			
	Total Files Size (in bytes):	1221119	

This Acknowledgement Receipt evidences receipt on the noted date by the USPTO of the indicated documents, characterized by the applicant, and including page counts, where applicable. It serves as evidence of receipt similar to a Post Card, as described in MPEP 503.

New Applications Under 35 U.S.C. 111
If a new application is being filed and the application includes the necessary components for a filing date (see 37 CFR 1.53(b)-(d) and MPEP 506), a Filing Receipt (37 CFR 1.54) will be issued in due course and the date shown on this Acknowledgement Receipt will establish the filing date of the application.

National Stage of an International Application under 35 U.S.C. 371
If a timely submission to enter the national stage of an international application is compliant with the conditions of 35 U.S.C. 371 and other applicable requirements a Form PCT/DO/EO/903 indicating acceptance of the application as a national stage submission under 35 U.S.C. 371 will be issued in addition to the Filing Receipt, in due course.

New International Application Filed with the USPTO as a Receiving Office
If a new international application is being filed and the international application includes the necessary components for an international filing date (see PCT Article 11 and MPEP 1810), a Notification of the International Application Number and of the International Filing Date (Form PCT/RO/105) will be issued in due course, subject to prescriptions concerning national security, and the date shown on this Acknowledgement Receipt will establish the international filing date of the application.

PTO/SB/06 (07-06)
Approved for use through 1/31/2007. OMB 0651-0032
U.S. Patent and Trademark Office; U.S. DEPARTMENT OF COMMERCE
Under the Paperwork Reduction Act of 1995, no persons are required to respond to a collection of information unless it displays a valid OMB control number.

PATENT APPLICATION FEE DETERMINATION RECORD

Substitute for Form PTO-875

Application or Docket Number	Filing Date	
12/837,162	07/15/2010	☐ To be Mailed

APPLICATION AS FILED – PART I

FOR	(Column 1) NUMBER FILED	(Column 2) NUMBER EXTRA	SMALL ENTITY ☒ RATE ($)	SMALL ENTITY FEE ($)	OR	OTHER THAN SMALL ENTITY RATE ($)	OTHER THAN SMALL ENTITY FEE ($)
☐ BASIC FEE (37 CFR 1.16(a), (b), or (c))	N/A	N/A	N/A			N/A	
☐ SEARCH FEE (37 CFR 1.16(k), (i), or (m))	N/A	N/A	N/A			N/A	
☐ EXAMINATION FEE (37 CFR 1.16(o), (p), or (q))	N/A	N/A	N/A			N/A	
TOTAL CLAIMS (37 CFR 1.16(i))	minus 20 =	*	X $ =		OR	X $ =	
INDEPENDENT CLAIMS (37 CFR 1.16(h))	minus 3 =	*	X $ =			X $ =	
☐ APPLICATION SIZE FEE (37 CFR 1.16(s))	If the specification and drawings exceed 100 sheets of paper, the application size fee due is $250 ($125 for small entity) for each additional 50 sheets or fraction thereof. See 35 U.S.C. 41(a)(1)(G) and 37 CFR 1.16(s).						
☐ MULTIPLE DEPENDENT CLAIM PRESENT (37 CFR 1.16(j))							
* If the difference in column 1 is less than zero, enter "0" in column 2.			TOTAL			TOTAL	

APPLICATION AS AMENDED – PART II

AMENDMENT 01/28/2013	(Column 1) CLAIMS REMAINING AFTER AMENDMENT		(Column 2) HIGHEST NUMBER PREVIOUSLY PAID FOR	(Column 3) PRESENT EXTRA	SMALL ENTITY RATE ($)	SMALL ENTITY ADDITIONAL FEE ($)	OR	OTHER THAN SMALL ENTITY RATE ($)	OTHER THAN SMALL ENTITY ADDITIONAL FEE ($)
Total (37 CFR 1.16(i))	* 30	Minus	** 30	= 0	X $31 =	0	OR	X $ =	
Independent (37 CFR 1.16(h))	* 7	Minus	***7	= 0	X $125 =	0	OR	X $ =	
☐ Application Size Fee (37 CFR 1.16(s))									
☐ FIRST PRESENTATION OF MULTIPLE DEPENDENT CLAIM (37 CFR 1.16(j))							OR		
					TOTAL ADD'L FEE	0	OR	TOTAL ADD'L FEE	

AMENDMENT	(Column 1) CLAIMS REMAINING AFTER AMENDMENT		(Column 2) HIGHEST NUMBER PREVIOUSLY PAID FOR	(Column 3) PRESENT EXTRA	RATE ($)	ADDITIONAL FEE ($)		RATE ($)	ADDITIONAL FEE ($)
Total (37 CFR 1.16(i))	*	Minus	**	=	X $ =		OR	X $ =	
Independent (37 CFR 1.16(h))	*	Minus	***	=	X $ =		OR	X $ =	
☐ Application Size Fee (37 CFR 1.16(s))									
☐ FIRST PRESENTATION OF MULTIPLE DEPENDENT CLAIM (37 CFR 1.16(j))							OR		
					TOTAL ADD'L FEE		OR	TOTAL ADD'L FEE	

* If the entry in column 1 is less than the entry in column 2, write "0" in column 3.
** If the "Highest Number Previously Paid For" IN THIS SPACE is less than 20, enter "20".
*** If the "Highest Number Previously Paid For" IN THIS SPACE is less than 3, enter "3".
The "Highest Number Previously Paid For" (Total or Independent) is the highest number found in the appropriate box in column 1.

Legal Instrument Examiner:
/KIMBERLY PANNELL/

This collection of information is required by 37 CFR 1.16. The information is required to obtain or retain a benefit by the public which is to file (and by the USPTO to process) an application. Confidentiality is governed by 35 U.S.C. 122 and 37 CFR 1.14. This collection is estimated to take 12 minutes to complete, including gathering, preparing, and submitting the completed application form to the USPTO. Time will vary depending upon the individual case. Any comments on the amount of time you require to complete this form and/or suggestions for reducing this burden, should be sent to the Chief Information Officer, U.S. Patent and Trademark Office, U.S. Department of Commerce, P.O. Box 1450, Alexandria, VA 22313-1450. DO NOT SEND FEES OR COMPLETED FORMS TO THIS ADDRESS. **SEND TO: Commissioner for Patents, P.O. Box 1450, Alexandria, VA 22313-1450.**
If you need assistance in completing the form, call 1-800-PTO-9199 and select option 2.

UNITED STATES PATENT AND TRADEMARK OFFICE

UNITED STATES DEPARTMENT OF COMMERCE
United States Patent and Trademark Office
Address: COMMISSIONER FOR PATENTS
P.O. Box 1450
Alexandria, Virginia 22313-1450
www.uspto.gov

APPLICATION NO.	FILING DATE	FIRST NAMED INVENTOR	ATTORNEY DOCKET NO.	CONFIRMATION NO.
12/837,162	07/15/2010	George Shu-Xing CHENG	350809-000003	3679

47604 7590 12/26/2012
DLA PIPER LLP US
P. O. BOX 2758
RESTON, VA 20195

EXAMINER
CAVALLARI, DANIEL J

ART UNIT	PAPER NUMBER
2836	

MAIL DATE	DELIVERY MODE
12/26/2012	PAPER

Please find below and/or attached an Office communication concerning this application or proceeding.

The time period for reply, if any, is set in the attached communication.

Office Action Summary	Application No.	Applicant(s)	
	12/837,162	CHENG ET AL.	
	Examiner	Art Unit	
	DANIEL CAVALLARI	2836	

-- The MAILING DATE of this communication appears on the cover sheet with the correspondence address --

Period for Reply

A SHORTENED STATUTORY PERIOD FOR REPLY IS SET TO EXPIRE 1 MONTH(S) OR THIRTY (30) DAYS, WHICHEVER IS LONGER, FROM THE MAILING DATE OF THIS COMMUNICATION.

- Extensions of time may be available under the provisions of 37 CFR 1.136(a). In no event, however, may a reply be timely filed after SIX (6) MONTHS from the mailing date of this communication.
- If NO period for reply is specified above, the maximum statutory period will apply and will expire SIX (6) MONTHS from the mailing date of this communication.
- Failure to reply within the set or extended period for reply will, by statute, cause the application to become ABANDONED (35 U.S.C. § 133). Any reply received by the Office later than three months after the mailing date of this communication, even if timely filed, may reduce any earned patent term adjustment. See 37 CFR 1.704(b).

Status

1)☒ Responsive to communication(s) filed on *15 July 2010*.

2a)☐ This action is **FINAL**. 2b)☐ This action is non-final.

3)☐ An election was made by the applicant in response to a restriction requirement set forth during the interview on _____; the restriction requirement and election have been incorporated into this action.

4)☐ Since this application is in condition for allowance except for formal matters, prosecution as to the merits is closed in accordance with the practice under *Ex parte Quayle*, 1935 C.D. 11, 453 O.G. 213.

Disposition of Claims

5)☒ Claim(s) *1-28* is/are pending in the application.

5a) Of the above claim(s) _____ is/are withdrawn from consideration.

6)☐ Claim(s) _____ is/are allowed.

7)☐ Claim(s) _____ is/are rejected.

8)☐ Claim(s) _____ is/are objected to.

9)☒ Claim(s) *1-28* are subject to restriction and/or election requirement.

* If any claims have been determined allowable, you may be eligible to benefit from the **Patent Prosecution Highway** program at a participating intellectual property office for the corresponding application. For more information, please see http://www.uspto.gov/patents/init_events/pph/index.jsp or send an inquiry to PPHfeedback@uspto.gov.

Application Papers

10)☐ The specification is objected to by the Examiner.

11)☐ The drawing(s) filed on _____ is/are: a)☐ accepted or b)☐ objected to by the Examiner.

Applicant may not request that any objection to the drawing(s) be held in abeyance. See 37 CFR 1.85(a).

Replacement drawing sheet(s) including the correction is required if the drawing(s) is objected to. See 37 CFR 1.121(d).

Priority under 35 U.S.C. § 119

12)☐ Acknowledgment is made of a claim for foreign priority under 35 U.S.C. § 119(a)-(d) or (f).

a)☐ All b)☐ Some * c)☐ None of:

1.☐ Certified copies of the priority documents have been received.

2.☐ Certified copies of the priority documents have been received in Application No. _____.

3.☐ Copies of the certified copies of the priority documents have been received in this National Stage application from the International Bureau (PCT Rule 17.2(a)).

* See the attached detailed Office action for a list of the certified copies not received.

Attachment(s)

1) ☐ Notice of References Cited (PTO-892)

2) ☐ Information Disclosure Statement(s) (PTO/SB/08) Paper No(s)/Mail Date _____.

3) ☐ Interview Summary (PTO-413) Paper No(s)/Mail Date. _____ .

4) ☐ Other: _____.

DETAILED ACTION

Election/Restrictions

Restriction to one of the following inventions is required under 35 U.S.C. 121:

I. Claims 1-12 and 24-25, drawn to a system for providing AC power to a power grid from a plurality of individual DC power sources, classified in class 307, subclass 43.

II. Claims 13-28, drawn to an inverter, classified in class 363, subclass 13.

The inventions are distinct, each from the other because of the following reasons:

Inventions I and II are related as combination and subcombination. Inventions in this relationship are distinct if it can be shown that (1) the combination as claimed does not require the particulars of the subcombination as claimed for patentability, and (2) that the subcombination has utility by itself or in other combinations (MPEP § 806.05(c)). In the instant case, the combination as claimed does not require the particulars of the subcombination as claimed because the systems of Group I do not require the particular inverter of Group II as evidenced by the divergent claimed subject matter. The subcombination has separate utility such as an inverter in any power supply circuit where DC power is desired from an AC input.

The examiner has required restriction between combination and subcombination inventions. Where applicant elects a subcombination, and claims thereto are subsequently found allowable, any claim(s) depending from or otherwise requiring all the limitations of the allowable subcombination will be examined for patentability in accordance with 37 CFR 1.104.

See MPEP § 821.04(a). Applicant is advised that if any claim presented in a continuation or divisional application is anticipated by, or includes all the limitations of, a claim that is allowable in the present application, such claim may be subject to provisional statutory and/or nonstatutory double patenting rejections over the claims of the instant application.

Restriction for examination purposes as indicated is proper because all these inventions listed in this action are independent or distinct for the reasons given above and there would be a serious search and/or examination burden if restriction were not required because at least the following reason(s) apply:

(i) the inventions have acquired a separate status in the art in view of their different classification;

(ii) the inventions have acquired a separate status in the art due to their recognized divergent subject matter;

(iii) the inventions require a different field of search (for example, searching different classes/subclasses or electronic resources, or employing different search queries);

(iv) the prior art applicable to one invention would not likely be applicable to another invention;

(v) the inventions are likely to raise different non-prior art issues under 35 U.S.C. 101 and/or 35 U.S.C. 112, first paragraph.

Applicant is advised that the reply to this requirement to be complete <u>must</u> include (i) an election of a invention to be examined even though the requirement may be traversed (37 CFR 1.143) **and (ii) identification of the claims encompassing the elected invention**.

The election of an invention may be made with or without traverse. To reserve a right to petition, the election must be made with traverse. If the reply does not distinctly and specifically point out supposed errors in the restriction requirement, the election shall be treated as an election without traverse. Traversal must be presented at the time of election in order to be considered timely. Failure to timely traverse the requirement will result in the loss of right to petition under 37 CFR 1.144. If claims are added after the election, applicant must indicate which of these claims are readable upon the elected invention.

Should applicant traverse on the ground that the inventions are not patentably distinct, applicant should submit evidence or identify such evidence now of record showing the inventions to be obvious variants or clearly admit on the record that this is the case. In either instance, if the examiner finds one of the inventions unpatentable over the prior art, the evidence or admission may be used in a rejection under 35 U.S.C. 103(a) of the other invention.

Conclusion

Any inquiry concerning this communication or earlier communications from the examiner should be directed to Daniel Cavallari whose telephone number is 571-272-8541. The examiner can normally be reached on Monday-Friday 10:00am-6:30pm.

If attempts to reach the examiner by telephone are unsuccessful, the examiner's supervisor, Jared Fureman can be reached at (571)272-2391. The fax phone number for the organization where this application or proceeding is assigned is 571-273-8300.

Information regarding the status of an application may be obtained from the Patent Application Information Retrieval (PAIR) system. Status information for published applications may be obtained from either Private PAIR or Public PAIR. Status information for unpublished applications is available through Private PAIR only. For more information about the PAIR system, see http://pair-direct.uspto.gov. Should you have questions on access to the Private PAIR system, contact the Electronic Business Center (EBC) at 866-217-9197 (toll-free). If you would like assistance from a USPTO Customer Service Representative or access to the automated information system, call 800-786-9199 (IN USA OR CANADA) or 571-272-1000.

/Daniel Cavallari/

12/16/2012

PRIMARY PATENT EXAMINER
ART UNIT 2836

PLUS Search Results for S/N 12837162, Searched Thu Dec 13 14:20:14 EST 2012

The Patent Linguistics Utility System (PLUS) is a USPTO automated search system for U.S. Patents from 1971 to the present PLUS is a query-by-example search system which produces a list of patents that are most closely related linguistically to the application searched. This search was prepared by the staff of the Scientific and Technical Information Center, SIRA.

5657257 99
5808881 99
5987613 90
6198262 90
6204701 90
5535238 86
5673286 86
5686881 86
6000829 86
6226316 86
6226316 86
4868815 81
4897662 81
4952817 81
5182810 81
5297099 81
5410711 81
5544138 81
5563907 81
5570002 81
5574747 81
5640069 81
5708819 81
5768702 81
5835527 81
5920590 81
5946086 81
5953536 81
5961617 81
5995538 81
6100643 81
6175586 81
4296296 77
4993249 77
5249298 77
5286518 77
5299226 77
5329758 77
5396637 77
5418701 77
5446322 77
5493707 77
5517447 77
5565807 77
5566340 77
5590343 77
5612639 77
5619204 77
5631921 77
5691603 77

PTO/SB/08a (08-03)
Approved for use through 07/31/2006. OMB 0651-0031
U.S. Patent and Trademark Office; U.S. DEPARTMENT OF COMMERCE
Under the Paperwork Reduction Act of 1995, no persons are required to respond to a collection of information unless it contains a valid OMB control number.

Substitute for form 1449A/PTO

INFORMATION DISCLOSURE STATEMENT BY APPLICANT

(Use as many sheets as necessary)

Complete if Known	
Application Number	12/837,162
Filing Date	July 15, 2010
First Named Inventor	George Shu-Xing Cheng
Art Unit	2836
Examiner Name	Daniel J. Cavallari
Attorney Docket Number	350809-000003

U. S. PATENT DOCUMENTS

Examiner Initials*	Cite No.	Document Number Number-Kind Code	Publication Date MM-DD-YYYY	Name of Patentee or Applicant of Cited Document	Pages, Columns, Lines, Where Relevant Passages or Relevant Figures Appear
		US -			
		US -			
		US -			
		US -			
		US -			
		US -			
		US -			
		US -			

FOREIGN PATENT DOCUMENTS

Examiner Initials*	Cite No.[1]	Foreign Patent Document Country Code[3] Number[4] Kind Code[5] *(if known)*	Publication Date MM-DD-YYYY	Name of Patentee or Applicant of Cited Document	Pages, Columns, Lines, Where Relevant Passages or Relevant Figures Appear	T[8]

NON PATENT LITERATURE DOCUMENTS

Examiner Initials*	Cite No.[1]	Include name of the author (in CAPITAL LETTERS), title of the article (when appropriate), title of the item (book, magazine, journal, serial, symposium, catalog, etc.), date, page(s), volume-issue number(s), publisher, city and/or country where published.	T[2]
		R. Jones. "The Measurement of Lumped Parameter Impedence: A Metrology Guide," University of Michigan, January 1974.	
		International Preliminary Report on Patentability issued in PCT/US2010/042123 on January 26, 2012.	
		Image File Wrapper of related U.S. Application No. 13/397,402 electronically captured on June 15, 2012.	
		Image File Wrapper of related U.S. Application No. 13/493,622 electronically captured on June 15, 2012.	

Examiner Signature		Date Considered	

*EXAMINER: Initial if reference considered, whether or not citation is in conformance with MPEP 609. Draw line through citation if not in conformance and not considered. Include copy of this form with next communication to applicant.

Docket No.: 350809-000003

IN THE UNITED STATES PATENT AND TRADEMARK OFFICE

IN RE APPLICATION:	George Shu-Xing Cheng	Conf. No.	3679
SERIAL NUMBER:	12/837,162	Group:	2836
FILED:	July 15, 2010	Examiner:	Daniel J. Cavakkari
FOR:	SMART AND SCALABLE POWER INVERTERS		

LIST OF RELATED CASES

Serial Number	Publication Number	Filing or Publication Date	Status
13/397,402	N/A	February 15, 2012	Pending
13/493,622	N/A	June 11, 2012	Pending

The cases listed on this Notice of Related Cases include cases which may contain information that is material to patentability. The listing of a case on this Notice should not be taken as an indication or admission that any information contained therein is material. Prior art for each case listed on this Notice may have been cited. **The files corresponding to the listed cases, which are available to the Examiner, may not have been examined to ascertain the materiality of any prior art therein.** Accordingly, the Examiner is requested to review the file for each case listed on this Notice in order to assess the materiality of such prior art.

Respectfully submitted,

DLA PIPER LLP US

Dale S. Lazar

P.O. Box 2758
Reston, VA 20195
Tel. 703.773.4000
Fax (703) 773-5200

Reg. No. 28,872
Attorney of Record
Date: June 15, 2012

Electronic Acknowledgement Receipt	
EFS ID:	13030586
Application Number:	12837162
International Application Number:	
Confirmation Number:	3679
Title of Invention:	SMART AND SCALABLE POWER INVERTERS
First Named Inventor/Applicant Name:	George Shu-Xing CHENG
Customer Number:	47604
Filer:	Dale S. Lazar/Ava M. Dixon
Filer Authorized By:	Dale S. Lazar
Attorney Docket Number:	350809-000003
Receipt Date:	15-JUN-2012
Filing Date:	15-JUL-2010
Time Stamp:	17:19:09
Application Type:	Utility under 35 USC 111(a)

Payment information:

Submitted with Payment	no

File Listing:

Document Number	Document Description	File Name	File Size(Bytes)/ Message Digest	Multi Part /.zip	Pages (if appl.)
1		IDS.pdf	1682786 5fad42ab5af8b850ffe3ea02893311966ad16c00	yes	5

	Multipart Description/PDF files in .zip description		
	Document Description	**Start**	**End**
	Transmittal Letter	1	3
	Information Disclosure Statement (IDS) Form (SB08)	4	4
	Transmittal Letter	5	5

Warnings:					
Information:					
2	Non Patent Literature	13397402IFWJUNE152012.pdf	3062086 d51318175c36aa40e2e3a6a5ebb586fc2b6fd05a	no	77
Warnings:					
Information:					
3	Non Patent Literature	13493622IFWJUNE152012.pdf	3188337 938cebe7e917ca36371636bea0ee72d1d37574b1	no	58
Warnings:					
Information:					
4	Non Patent Literature	LumpedParameter.pdf	10099468 284fbf320849230cd10d0d380e3d63f47fd892f6	no	208
Warnings:					
Information:					
5	Non Patent Literature	PCTUS2010042123IPERJAN262012.pdf	2704561 abda229a09b336c3da56387451fea2c5a2598c68	no	8
Warnings:					
Information:					
		Total Files Size (in bytes):	20737238		

This Acknowledgement Receipt evidences receipt on the noted date by the USPTO of the indicated documents, characterized by the applicant, and including page counts, where applicable. It serves as evidence of receipt similar to a Post Card, as described in MPEP 503.

New Applications Under 35 U.S.C. 111
If a new application is being filed and the application includes the necessary components for a filing date (see 37 CFR 1.53(b)-(d) and MPEP 506), a Filing Receipt (37 CFR 1.54) will be issued in due course and the date shown on this Acknowledgement Receipt will establish the filing date of the application.

National Stage of an International Application under 35 U.S.C. 371
If a timely submission to enter the national stage of an international application is compliant with the conditions of 35 U.S.C. 371 and other applicable requirements a Form PCT/DO/EO/903 indicating acceptance of the application as a national stage submission under 35 U.S.C. 371 will be issued in addition to the Filing Receipt, in due course.

New International Application Filed with the USPTO as a Receiving Office
If a new international application is being filed and the international application includes the necessary components for an international filing date (see PCT Article 11 and MPEP 1810), a Notification of the International Application Number and of the International Filing Date (Form PCT/RO/105) will be issued in due course, subject to prescriptions concerning national security, and the date shown on this Acknowledgement Receipt will establish the international filing date of the application.

Docket No.: 350809-000003

IN THE UNITED STATES PATENT AND TRADEMARK OFFICE

IN RE APPLICATION:	George Shu-Xing Cheng	Conf. No.	3679
SERIAL NUMBER:	12/837,162	Group:	2836
FILED:	July 15, 2010	Examiner:	Daniel J. Cavallari
FOR:	SMART AND SCALABLE POWER INVERTERS		

INFORMATION DISCLOSURE STATEMENT UNDER 37 C.F.R. 1.97

Commissioner for Patents
PO BOX 1450
ALEXANDRIA, VA 22313-1450

June 15, 2012

Sir:

Applicant(s) wish(es) to disclose the following information.

REFERENCES

☒ Applicant(s) wish(es) to make of record the documents listed on the attached Form PTO-1449. Copies of the listed documents are attached, where required, as are either statements of relevancy or any readily available full or partial English translations of any non-English-language documents.

EXPLANATION OF RELEVANCE

The documents listed on the attached Form PTO 1449 were cited in related and corresponding applications. English language abstracts and translations are provided for the convenience of the Examiner where available.

RELATED CASES

☒ Attached is a list of Applicant's(s') pending applications and issued patents which may be related to the present application. Copies of the documents, where required, are attached along with Form PTO-1449.

CERTIFICATION

The undersigned certifies that

☐ each item of information contained in this Information Disclosure Statement was first cited in any communication from a foreign or international patent office in a counterpart foreign or international application for the first time (to the knowledge of the undersigned, having made reasonable inquiry) not more than three months prior to the filing of this statement (See 37 CFR 1.97(e)(1)).

☐ no item of information contained in this Information Disclosure Statement was cited in a communication from a foreign or international patent office in a counterpart foreign or international application, and, to the knowledge of the undersigned, having made reasonable inquiry, was known to any individual designated in 37 C.F.R. 1.56(c) more than three months prior to the filing of this statement. (See 37 CFR 1.97(e)(2))

BASIS FOR CONSIDERATION

This Information Disclosure Statement is filed:

☐ without fee and within three months of the filing date of the application.
☐ without fee and within three months of the date of entry of the U.S. national stage.
☒ without fee and before the mailing date of a first Office Action on the merits (to the knowledge of the undersigned).
☐ without fee and with the appropriate certification above.
☐ without fee and with a new CPA application.
☐ without fee and with a Request for Continued Examination.
☐ with fee and before the mailing date of any Final Office Action, Notice of Allowance or an action that otherwise closes prosecution (to the knowledge of the undersigned).
☐ with fee, appropriate certification above, and before payment of the Issue Fee.

DEPOSIT ACCOUNT

☒ Please charge any additional fees for the papers being filed herewith, or credit any overpayment to Deposit Account No. 50-3266.

Respectfully submitted,

DLA PIPER LLP US

Dale S. Lazar
Registration No. 28,872
Attorney for Applicant

DSL/amd
P.O. Box 2758
Reston, VA 20195
Tel. 703.773.4000
Fax (703) 773-5200

PTO/SB/08a (08-03)
Approved for use through 07/31/2006. OMB 0651-0031
U.S. Patent and Trademark Office; U.S. DEPARTMENT OF COMMERCE
Under the Paperwork Reduction Act of 1995, no persons are required to respond to a collection of information unless it contains a valid OMB control number.

Substitute for form 1449A/PTO

INFORMATION DISCLOSURE STATEMENT BY APPLICANT

(Use as many sheets as necessary)

Complete if Known	
Application Number	12/837,162
Filing Date	July 15, 2010
First Named Inventor	George Shu-Xing Cheng
Art Unit	2838
Examiner Name	Unknown
Attorney Docket Number	350809-000003

U. S. PATENT DOCUMENTS

Examiner Initials*	Cite No.	Document Number Number-Kind Code	Publication Date MM-DD-YYYY	Name of Patentee or Applicant of Cited Document	Pages, Columns, Lines, Where Relevant Passages or Relevant Figures Appear
		US -2003/7369	1/9/2003	Gilbreth	
		US -2009-160258	6/25/2009	James	
		US -2009-159113	6/25/2009	Keiji	
		US -2008-111517	5/15/2008	Pfeifer	
		US -2004-264225	12/30/2004	Bhavaraju	
		US -2001-52704	12/20/2001	Bosley	
		US -2001/52704	12/20/2001	Bosley	
		US -2002/73713	6/20/2002	Mackay	
		US -2002/99476	7/25/2002	Hamrin	
		US -2002/166324	11/14/2002	Willis	
		US -2004/103669	6/3/2004	Willis	
		US -2004/119291	6/24/2004	Hamrin	
		US -2004/135436	7/15/2004	Gilbreth	
		US -5,903,116	5/11/1999	GEIS	
		US -6,031,294	2/29/2000	GEIS	
		US -6,192,668	2/27/2001	MACKAY	
		US -6,265,786	7/24/2001	BOSLEY	
		US -6,325,142	12/4/2001	BOSLEY	
		US -6,381,944	5/7/2002	Mackay	
		US -6,487,096	11/26/2002	GILBRETH	
		US -6,495,929	12/17/2002	Bosley	
		US -6,612,112	9/2/2003	Gilbreth	
		US -6,784,565	8/31/2004	Wall	
		US -6,870,279	3/22/2005	Gilbreth	
		US -6,958,550	10/25/2005	Gilbreth	
		US -6,960,840	11/1/2005	Willis	
		US -2008/111517	5/15/2008	Pfeifer	

FOREIGN PATENT DOCUMENTS

Examiner Initials*	Cite No.[1]	Foreign Patent Document Country Code[3] Number[4] Kind Code[5] *(if known)*	Publication Date MM-DD-YYYY	Name of Patentee or Applicant of Cited Document	Pages, Columns, Lines, Where Relevant Passages or Relevant Figures Appear	T[6]

PTO/SB/08a (08-03)
Approved for use through 07/31/2006. OMB 0651-0031
U.S. Patent and Trademark Office; U.S. DEPARTMENT OF COMMERCE
Under the Paperwork Reduction Act of 1995, no persons are required to respond to a collection of information unless it contains a valid OMB control number.

Substitute for form 1449A/PTO

INFORMATION DISCLOSURE STATEMENT BY APPLICANT

(Use as many sheets as necessary)

Complete if Known	
Application Number	12/837,162
Filing Date	July 15, 2010
First Named Inventor	George Shu-Xing Cheng
Art Unit	2838
Examiner Name	Unknown
Attorney Docket Number	350809-000003

NON PATENT LITERATURE DOCUMENTS			
Examiner Initials*	Cite No.[1]	Include name of the author (in CAPITAL LETTERS), title of the article (when appropriate), title of the item (book, magazine, journal, serial, symposium, catalog, etc.), date, page(s), volume-issue number(s), publisher, city and/or country where published.	T[2]
		Maniktala, Sanjaya., "Switching Power Supplies A to Z," Elsevier, 2006.	
		International Search Report issued in PCT/US2010/042123 mailed February 22, 2011	
		Written Opinion issued in PCT/US2010/042123 mailed February 22, 2011	
Examiner Signature		Date Considered	

•EXAMINER: Initial if reference considered, whether or not citation is in conformance with MPEP 609. Draw line through citation if not in conformance and not considered. Include copy of this form with next communication to applicant.

PATENT COOPERATION TREATY

From the INTERNATIONAL SEARCHING AUTHORITY

To:

LAZAR DALE S.

DLA PIPER LLP P.O. BOX 2758 RESTON VA 20195 USA

PCT

NOTIFICATION OF TRANSMITTAL OF THE INTERNATIONAL SEARCH REPORT AND THE WRITTEN OPINION OF THE INTERNATIONAL SEARCHING AUTHORITY, OR THE DECLARATION

(PCT Rule 44.1)

Date of mailing *(day/month/year)* 22 FEBRUARY 2011 (22.02.2011)

Applicant's or agent's file reference
350809-000004

FOR FURTHER ACTION See paragraphs 1 and 4 below

International application No.
PCT/US2010/042123

International filing date *(day/month/year)*
15 JULY 2010 (15.07.2010)

Applicant

GENERAL CYBERNATION GROUP, INC. et al

1. ☒ The applicant is hereby notified that the international search report and the written opinion of the International Searching Authority have been established and are transmitted herewith.
Filing of amendments and statement under Article 19:
The applicant is entitled, if he so wishes, to amend the claims of the international application (see Rule 46):
When? The time limit for filing such amendments is normally two months from the date of transmittal of the international search report.
Where? Directly to the International Bureau of WIPO, 34 chemin des Colombettes 1211 Geneva 20, Switzerland, Facsimile No.: +41 22 338 82 70
For more detailed instructions, see *PCT Applicant's Guide*, International Phase, paragraphs 9.004 . 9.011.

2. ☐ The applicant is hereby notified that no international search report will be established and that the declaration under Article 17(2)(a) to that effect and the written opinion of the International Searching Authority are transmitted herewith.

3. ☐ **With regard to any protest** against payment of (an) additional fee(s) under Rule 40.2, the applicant is notified that:
☐ the protest together with the decision thereon has been transmitted to the International Bureau together with any request to forward the texts of both the protest and the decision thereon to the designated Offices.
☐ no decision has been made yet on the protest; the applicant will be notified as soon as a decision is made.

4. **Reminders**
The applicant may submit comments on an informal basis on the written opinion of the International Searching Authority to the International Bureau. The International Bureau will send a copy of such comments to all designated Offices unless an international preliminary examination report has been or is to be established. Following the expiration of 30 months from the priority date, these comments will also be made available to the public.

Shortly after the expiration of **18 months** from the priority date, the international application will be published by the International Bureau. If the applicant wishes to avoid or postpone publication, a notice of withdrawal of the international application, or of the priority claim, must reach the International Bureau before the completion of the technical preparations for international publication (Rules 90bis.1 and 90bis.3).

Within **19 months** from the priority date, but only in respect of some designated Offices, a demand for international preliminary examination must be filed if the applicant wishes to postpone the entry into the national phase **until 30 months** from the priority date (in some Offices even later); otherwise, the applicant must, **within 20 months** from the priority date, perform the prescribed acts for entry into the national phase before those designated Offices.
In respect of other designated Offices, the time limit of **30 months** (or later) will apply even if no demand is filed within 19months.

For details about the applicable time limits, Office by Office, see www.wipo.int/pct/en/texts/time_limits.html and the PCT Applicant's Guide, National Chapters.

Name and mailing address of the ISA/KR
Korean Intellectual Property Office
Government Complex-Daejeon, 139 Seonsa-ro, Seo-gu, Daejeon 302-701, Republic of Korea
Facsimile No. 82-42-472-7140

Authorized officer
COMMISSIONER
Telephone No. 82-42-481-8754

Form PCT/ISA/220 (July 2010)

* Attention

Copies of the documents cited in the international search report can be searched in the following Korean Intellectual Property Office English website for three months from the date of mailing of the international search report.

http://www.kipo.go.kr/en/ => PCT Services => PCT Services

ID : PCT international application number
PW : **G6KCHJXK**

Inquiries related to PCT International Search Report or Written Opinion prepared by KIPO as an International Searching Authority can be answered not only by KIPO but also through IPKC (Intellectual Property Korea Center), located in Vienna, VA, which functions as a PCT Help Desk for PCT applicants.

Homepage: http://www.ipkcenter.com
Email: ipkc@ipkcenter.com
Phone: +1 703 388 1066
Fax: +1 703 388 1084

PATENT COOPERATION TREATY

PCT

INTERNATIONAL SEARCH REPORT

(PCT Article 18 and Rules 43 and 44)

Applicant's or agent's file reference 350809-000004	**FOR FURTHER ACTION**	see Form PCT/ISA/220 as well as, where applicable, item 5 below.
International application No. **PCT/US2010/042123**	International filing date *(day/month/year)* **15 JULY 2010 (15.07.2010)**	(Earliest) Priority Date *(day/month/year)* 16 JULY 2009 (16.07.2009)
Applicant **GENERAL CYBERNATION GROUP, INC. et al**		

This International search report has been prepared by this International Searching Authority and is transmitted to the applicant according to Article 18. A copy is being transmitted to the International Bureau.

This international search report consists of a total of 4 sheets.

☐ It is also accompanied by a copy of each prior art document cited in this report.

1. **Basis of the report**
   a. With regard to the **language**, the international search was carried out on the basis of:
      ☒ the international application in the language in which it was filed
      ☐ a translation of the international application into _____, which is the language of a translation furnished for the purposes of international search (Rules 12.3(a) and 23.1(b))
   b. ☐ This international search report has been established taking into account the **rectification of an obvious mistake** authorized by or notified to this Authority under Rule 91 (Rule 43.6*bis*(a)).
   c. ☐ With regard to any **nucleotide and/or amino acid sequence** disclosed in the international application, see Box No. I.
2. ☐ **Certain claims were found unsearchable** (See Box No. II)
3. ☐ **Unity of invention is lacking** (See Box No. III)
4. With regard to the **title**,
   ☒ the text is approved as submitted by the applicant.
   ☐ the text has been established by this Authority to read as follows:
5. With regard to the **abstract**,
   ☒ the text is approved as submitted by the applicant.
   ☐ the text has been established, according to Rule 38.2, by this Authority as it appears in Box No. IV. The applicant may, within one month from the date of mailing of this international search report, submit comments to this Authority.
6. With regard to the drawings,
   a. the figure of the **drawings** to be published with the abstract is Figure No. 6
      ☒ as suggested by the applicant.
      ☐ as selected by this Authority, because the applicant failed to suggest a figure.
      ☐ as selected by this Authority, because this figure better characterizes the invention.
   b. ☐ none of the figure is to be published with the abstract.

INTERNATIONAL SEARCH REPORT

International application No.
PCT/US2010/042123

A. CLASSIFICATION OF SUBJECT MATTER

H02J 3/38(2006.01)i, H02J 7/35(2006.01)i, H02M 7/48(2007.01)i

According to International Patent Classification (IPC) or to both national classification and IPC

B. FIELDS SEARCHED

Minimum documentation searched (classification system followed by classification symbols)
H02J 3/38; H02J 3/36; H02J 1/00; H02J 7/00; H01L 31/042; H02M 7/48

Documentation searched other than minimum documentation to the extent that such documents are included in the fields searched
Korean utility models and applications for utility models
Japanese utility models and applications for utility models

Electronic data base consulted during the international search (name of data base and, where practicable, search terms used)
eKOMPASS(KIPO internal) & Keywords: power grid, inverter, converter, daisy chain, MPPT, modem, switch

C. DOCUMENTS CONSIDERED TO BE RELEVANT

Category*	Citation of document, with indication, where appropriate, of the relevant passages	Relevant to claim No.
Y A	US 2003-0007369 A1 (MARK G. GILBRETH et al.) 09 January 2003 See the abstract; claims 1-4; figures 1-7.	13-16 1-12,17-28
Y A	US 2009-0160258 A1 (ALLEN JAMES et al.) 25 June 2009 See the abstract; claim 1; figure 4.	13-16 1-12,17-28
A	US 2009-0159113 A1 (MORIMOTO KEIJI) 25 June 2009 See the abstract; claim 1; figure 2.	1-28
A	US 2008-0111517 A1 (PFEIFER JOHN E. et al.) 15 May 2008 See the abstract; claims 1, 9; figure 1.	1-28
A	US 2004-0264225 A1 (BHAVARAJU VIJAY et al.) 30 December 2004 See the abstract; claim 1; figure 1.	1-28

☐ Further documents are listed in the continuation of Box C. ☒ See patent family annex.

* Special categories of cited documents:
"A" document defining the general state of the art which is not considered to be of particular relevance
"E" earlier application or patent but published on or after the international filing date
"L" document which may throw doubts on priority claim(s) or which is cited to establish the publication date of citation or other special reason (as specified)
"O" document referring to an oral disclosure, use, exhibition or other means
"P" document published prior to the international filing date but later than the priority date claimed
"T" later document published after the international filing date or priority date and not in conflict with the application but cited to understand the principle or theory underlying the invention
"X" document of particular relevance; the claimed invention cannot be considered novel or cannot be considered to involve an inventive step when the document is taken alone
"Y" document of particular relevance; the claimed invention cannot be considered to involve an inventive step when the document is combined with one or more other such documents,such combination being obvious to a person skilled in the art
"&" document member of the same patent family

Date of the actual completion of the international search	Date of mailing of the international search report
21 FEBRUARY 2011 (21.02.2011)	**22 FEBRUARY 2011 (22.02.2011)**
Name and mailing address of the ISA/KR Korean Intellectual Property Office Government Complex-Daejeon, 139 Seonsa-ro, Seo-gu, Daejeon 302-701, Republic of Korea Facsimile No. 82-42-472-7140	Authorized officer WEE Jae Woo Telephone No. 82-42-481-8540

Form PCT/ISA/210 (second sheet) (July 2009)

INTERNATIONAL SEARCH REPORT

Information on patent family members

International application No.
PCT/US2010/042123

Patent document cited in search report	Publication date	Patent family member(s)	Publication date
US 2003-0007369 A1	09.01.2003	CA 2246769 C	10.11.2009
		CA 2279320-A1	27.04.2000
		EP 0901218 A2	10.03.1999
		EP 0901218 A3	16.08.2000
		EP 0901218 B1	21.12.2005
		JP 11-122995 A	30.04.1999
		US 2001-0017029 A1	30.08.2001
		US 2001-0052704 A1	20.12.2001
		US 2002-0030364 A1	14.03.2002
		US 2002-0073713 A1	20.06.2002
		US 2002-0099476 A1	25.07.2002
		US 2002-0121091 A1	05.09.2002
		US 2002-0166324 A1	14.11.2002
		US 2002-0190695 A1	19.12.2002
		US 2002-0198648 A1	26.12.2002
		US 2004-0100101 A1	27.05.2004
		US 2004-0103669 A1	03.06.2004
		US 2004-0119291 A1	24.06.2004
		US 2004-0135436 A1	15.07.2004
		US 2004-0245783 A1	09.12.2004
		US 5903116 A1	11.05.1999
		US 6031294 A1	29.02.2000
		US 6192668 B1	27.02.2001
		US 6265786 B1	24.07.2001
		US 6325142 B1	04.12.2001
		US 6381944 B2	07.05.2002
		US 6487096 B1	26.11.2002
		US 6495929 B2	17.12.2002
		US 6612112 B2	02.09.2003
		US 6784565 B2	31.08.2004
		US 6870279 B2	22.03.2005
		US 6958550 B2	25.10.2005
		US 6960840 B2	01.11.2005
US 2009-0160258 A1	25.06.2009	AU 2008-340268 A1	02.07.2009
		CA 2709691-A1	02.07.2009
		EP 2223192 A1	01.09.2010
		KR 10-2010-0129721 A	09.12.2010
		WO 2009-082708 A1	02.07.2009
US 2009-0159113 A1	25.06.2009	AU 2007-244454 A1	08.11.2007
		EP 2012363 A1	07.01.2009
		JP W020-071258 67A1	08.11.2007
		WO 2007-125867 A1	08.11.2007
US 2008-0111517 A1	15.05.2008	US 2008-111517 A1	15.05.2008
		WO 2008-061116 A2	22.05.2008
		WO 2008-061116 A3	20.11.2008

INTERNATIONAL SEARCH REPORT

Information on patent family members

International application No.
PCT/US2010/042123

Patent document cited in search report	Publication date	Patent family member(s)	Publication date
US 2004-0264225 A1	30.12.2004	US 2004-264225 A1 US 7256566 B2	30.12.2004 14.08.2007

Form PCT/ISA/210 (patent family annex) (July 2009)

PATENT COOPERATION TREATY

From the
INTERNATIONAL SEARCHING AUTHORITY

To:
LAZAR DALE S.

DLA PIPER LLP P.O. BOX 2758 RESTON VA 20195 USA

PCT

WRITTEN OPINION OF THE INTERNATIONAL SEARCHING AUTHORITY

(PCT Rule 43bis.1)

Date of mailing *(day/month/year)* **22 FEBRUARY 2011 (22.02.2011)**

Applicant's or agent's file reference
350809-000004

FOR FURTHER ACTION
See paragraph 2 below

International application No.	International filing date *(day/month/year)*	Priority date *(day/month/year)*
PCT/US2010/042123	**15 JULY 2010 (15.07.2010)**	16 JULY 2009 (16.07.2009)

International Patent Classification (IPC) or both national classification and IPC

H02J 3/38(2006.01)i, H02J 7/35(2006.01)i, H02M 7/48(2007.01)i

Applicant

GENERAL CYBERNATION GROUP, INC. et al

MAR - 1 2011

DOCKETED
Resp Written Opinion

mc 3/28/11
5.22.11

1. This opinion contains indications relating to the following items:

- [X] Box No. I Basis of the opinion
- [ ] Box No. II Priority
- [ ] Box No. III Non-establishment of opinion with regard to novelty, inventive step and industrial applicability
- [ ] Box No. IV Lack of unity of invention
- [X] Box No. V Reasoned statement under Rule 43bis.1(a)(i) with regard to novelty, inventive step or industrial applicability; citations and explanations supporting such statement
- [ ] Box No. VI Certain documents cited
- [X] Box No. VII Certain defects in the international application
- [X] Box No. VIII Certain observations on the international application

2. **FURTHER ACTION**
If a demand for international preliminary examination is made, this opinion will be considered to be a written opinion of the International Preliminary Examining Authority ("IPEA") except that this does not apply where the applicant chooses an Authority other than this one to be the IPEA and the chosen IPEA has notified the International Bureau under Rule 66.1bis(b) that written opinions of this International Searching Authority will not be so considered.

If this opinion is, as provided above, considered to be a written opinion of the IPEA, the applicant is invited to submit to the IPEA a written reply together, where appropriate, with amendments, before the expiration of 3 months from the date of mailing of Form PCT/ISA/220 or before the expiration of 22 months from the priority date, whichever expires later.
For further options, see Form PCT/ISA/220.

3. For further details, see notes to Form PCT/ISA/220.

Name and mailing address of the ISA/KR	Date of completion of this opinion	Authorized officer
Korean Intellectual Property Office Government Complex-Daejeon, 139 Seonsa-ro, Seo-gu, Daejeon 302-701, Republic of Korea Facsimile No. 82-42-472-7140	21 FEBRUARY 2011 (21.02.2011)	WEE Jae Woo Telephone No.82-42-481-8540

Form PCT/ISA/237 (cover sheet) (July 2009)

WRITTEN OPINION OF THE INTERNATIONAL SEARCHING AUTHORITY	International application No. PCT/US2010/042123

Box No. I Basis of this opinion

1. With regard to the **language**, this opinion has been established on the basis of :

   ☒ the international application in the language in which it was filed

   ☐ a translation of the international application into _____ , which is the language of a translation furnished for the purposes of international search (Rules 12.3(a) and 23.1(b))

2. ☐ This opinion has been established taking into account the **rectification of an obvious mistake** authorized by or notified to this Authority under Rule 91 (Rule 43*bis*.1(a))

3. With regard to any **nucleotide and/or amino acid sequence** disclosed in the international application, this opinion has been established on the basis of:

   a. a sequence listing filed or furnished
   ☐ on paper
   ☐ in electronic form

   b. time of filing or furnishing
   ☐ contained in the international application as filed.
   ☐ filed together with the international application in electronic form.
   ☐ furnished subsequently to this Authority for the purposes of search.

4. ☐ In addition, in the case that more than one version or copy of a sequence listing has been filed or furnished, the required statements that the information in the subsequent or additioanl copies is identical to that in the application as filed or does not go beyond the application as filed, as appropriate, were furnished.

5. Additional comments:

WRITTEN OPINION OF THE INTERNATIONAL SEARCHING AUTHORITY	International application No. PCT/US2010/042123

Box No. V Reasoned statement under Rule 43bis.1(a)(i) with regard to novelty, inventive step or industrial applicability; citations and explanations supporting such statement

1. Statement

Novelty (N)	Claims	1-28	YES
	Claims	NONE	NO
Inventive step (IS)	Claims	1-12,17-28	YES
	Claims	13-16	NO
Industrial applicability (IA)	Claims	1-28	YES
	Claims	NONE	NO

2. Citations and explanations :

Reference is made to the following documents:

D1: US 2003-0007369 A1 (MARK G. GILBRETH et al.) 09 January 2003
D2: US 2009-0160258 A1 (ALLEN JAMES et al.) 25 June 2009
D3: US 2009-0159113 A1 (MORIMOTO KEIJI) 25 June 2009
D4: US 2008-0111517 A1 (PFEIFER JOHN E. et al.) 15 May 2008
D5: US 2004-0264225 A1 (BHAVARAJU VIJAY et al.) 30 December 2004

1. Novelty and Inventive step

1.1. Claims 1-4
The subject matter of claim 1 differs from these prior art document in that claim 1 includes a AC power output port of each inverter being connected in a daisy chain to the AC power input port of the next inverter. And it is not obvious to a person skilled in the art by the documents, taken alone or in combination. Therefore, claim 1 meets the requirements of PCT Article 33(2) and (3) with respect to novelty and inventive step.

Claims 2-4 are dependant on claim 1 and therefore meet the requirements of PCT Article 33(2) and (3).

1.2. Claims 5-8
The subject matter of claim 5 differs from these prior art document in that claim 5 includes a AC power output port of each inverter being connected in a daisy chain to the AC power input port of the next inverter. And it is not obvious to a person skilled in the art by the documents, taken alone or in combination. Therefore, claim 5 meets the requirements of PCT Article 33(2) and (3) with respect to novelty and inventive step.

Claims 6-8 are dependant on claim 5 and therefore meet the requirements of PCT Article 33(2) and (3).

1.3. Claims 9-12, 24-25
The subject matter of claim 9 differs from these prior art document in that claim 9 includes a AC power output port of each inverter being connected in a daisy chain to the AC power input port of the next inverter. And it is not obvious to a person skilled in the art by the documents, taken alone or in combination. Therefore, claim 9 meets the requirements of PCT Article 33(2) and (3) with respect to novelty and inventive step.

Claims 10-12, 24-25 are dependant on claim 9 and therefore meet the requirements of PCT Article 33(2) and (3).

(Continued on the Supplemental box.)

WRITTEN OPINION OF THE
INTERNATIONAL SEARCHING AUTHORITY

International application No.
PCT/US2010/042123

Box No. VII Certain defects in the international application

The following defects in the form or contents of the international application have been noted:

Claims of this application are not numbered consecutively in Arabic numbers, since claims 1-28 are found twice. (PCT Rule 6.1(b))

Box No. VIII Certain observations on the international application

The following observations on the clarity of the claims, description, and drawings or on the question whether the claims are fully supported by the description, are made:

1. The term "m number of DC-DC boost converters" used in claim 9 is vague and unclear, thereby rendering the claim 9 unclear (PCT Article 6).

2. Claim 17 relates to a DC-to-AC power inverter, but claim 24 dependant on claim 17 relates to a system. As claim 24 does not clearly define the matter for which protection is sought, this claim does not meet the requirement of PCT Article 6.

Supplemental Box

In case the space in any of the preceding boxes is not sufficient.
Continuation of:

Box No. V

1.4. Claims 13-16
D1, which is considered to be the closest prior art to the subject matter of claim 13, discloses a power controller comprising: a generator inverter, a DC bus, a means for providing a constant AC voltage and a current output, controller regulating a DC bus voltage, a power switch. Claim 13 differs from D1 in that claim 13 includes an MFA microcontroller performing maximum power point tracking (MPPT). However, it is well known from a maximum power point tracking (MPPT) component varying an operating point of a boost converter to match the impedance of a DC from a energy receiving component to maximize transfer of power in D2. Accordingly, claim 13 would have been obvious over D1 in view of D2. Therefore, claim 13 lacks an inventive step under PCT Article 33(3).

The additional feature of claims 14-15 dependent on claim 13 is considered to be a minor difference over the disclosure of D1-D2, that falls under the general knowledge by a person skilled in the art.

The additional feature of claim 16 dependent on claim 13 is similar to the feature of a maximum power point tracking (MPPT) component varying an operating point of a boost converter to match the impedance of a DC from a energy receiving component to maximize transfer of power in D2.

Therefore, claims 13-16 lack an inventive step under PCT Article 33(3).

1.5. Claims 17-20
The subject matter of claim 17 differs from these prior art document in that claim 17 includes a DC power combiner connected to DC-DC boost converters. And it is not obvious to a person skilled in the art by the documents, taken alone or in combination. Therefore, claim 17 meets the requirements of PCT Article 33(2) and (3) with respect to novelty and inventive step.

Claims 18-20 are dependant on claim 17 and therefore meet the requirements of PCT Article 33(2) and (3).

1.6. Claims 21-23
The subject matter of claim 21 differs from these prior art document in that claim 21 includes a AC power output port of each inverter being connected in a daisy chain to the AC power input port of the next inverter. And it is not obvious to a person skilled in the art by the documents, taken alone or in combination. Therefore, claim 21 meets the requirements of PCT Article 33(2) and (3) with respect to novelty and inventive step.

Claims 22-23 are dependant on claim 21 and therefore meet the requirements of PCT Article 33(2) and (3).

1.7. Claims 26-28
The subject matter of claim 26 differs from these prior art document in that claim 26 includes daisy-chaining at least two of inverters. And it is not obvious to a person skilled in the art by the documents, taken alone or in combination. Therefore, claim 26 meets the requirements of PCT Article 33(2) and (3) with respect to novelty and inventive step.

Claims 27-28 are dependant on claim 26 and therefore meet the requirements of PCT Article 33(2) and (3).

2. Industrial Applicability

Claims 1-28 are considered to be industrially applicable under PCT Article 33(4).

Electronic Acknowledgement Receipt

EFS ID:	10494148
Application Number:	12837162
International Application Number:	
Confirmation Number:	3679
Title of Invention:	SMART AND SCALABLE POWER INVERTERS
First Named Inventor/Applicant Name:	George Shu-Xing CHENG
Customer Number:	47604
Filer:	Dale S. Lazar/Josefina Cheng
Filer Authorized By:	Dale S. Lazar
Attorney Docket Number:	350809-000003
Receipt Date:	11-JUL-2011
Filing Date:	15-JUL-2010
Time Stamp:	18:59:57
Application Type:	Utility under 35 USC 111(a)

Payment information:

Submitted with Payment	no

File Listing:

Document Number	Document Description	File Name	File Size(Bytes)/ Message Digest	Multi Part /.zip	Pages (if appl.)
1	Transmittal Letter	350809-3IDS.pdf	91991 24ca5ad00aadf126c5460e2ff2c56485b14b3d0b	no	3

Warnings:

Information:

2	Information Disclosure Statement (IDS) Form (SB08)	350809-3PTO1449.pdf	102703 3006e429919f827f90e4fbd276b6bafff67d3415	no	2
Warnings:					
Information:					
This is not an USPTO supplied IDS fillable form					
3	Non Patent Literature	SwitchingPower-PARTI.pdf	12798390 1522fd0476b31302a8a48a9fe924bb13245c9532	no	200
Warnings:					
Information:					
4	Non Patent Literature	SwitchingPower-PARTII.pdf	13069688 7cf4cd4aa924dae6dbccb270034f43611a569bca	no	194
Warnings:					
Information:					
5	Non Patent Literature	SwitchingPower-PARTIII.pdf	15310556 1d53110e2b71b77e79373affc5e8371cd114678f	no	132
Warnings:					
Information:					
6	Non Patent Literature	ISR-PCTUS2010042123.pdf	2168017 bf90347901983b7d7b3619339a27c8261f7f49f0	no	6
Warnings:					
Information:					
7	Non Patent Literature	WO-PCTUS2010042123.pdf	1944488 ed1294b704efd4b3f401becf831833ae1011a2c5	no	6
Warnings:					
Information:					
		Total Files Size (in bytes):	45485833		

This Acknowledgement Receipt evidences receipt on the noted date by the USPTO of the indicated documents, characterized by the applicant, and including page counts, where applicable. It serves as evidence of receipt similar to a Post Card, as described in MPEP 503.

New Applications Under 35 U.S.C. 111
If a new application is being filed and the application includes the necessary components for a filing date (see 37 CFR 1.53(b)-(d) and MPEP 506), a Filing Receipt (37 CFR 1.54) will be issued in due course and the date shown on this Acknowledgement Receipt will establish the filing date of the application.

National Stage of an International Application under 35 U.S.C. 371
If a timely submission to enter the national stage of an international application is compliant with the conditions of 35 U.S.C. 371 and other applicable requirements a Form PCT/DO/EO/903 indicating acceptance of the application as a national stage submission under 35 U.S.C. 371 will be issued in addition to the Filing Receipt, in due course.

New International Application Filed with the USPTO as a Receiving Office
If a new international application is being filed and the international application includes the necessary components for an international filing date (see PCT Article 11 and MPEP 1810), a Notification of the International Application Number and of the International Filing Date (Form PCT/RO/105) will be issued in due course, subject to prescriptions concerning national security, and the date shown on this Acknowledgement Receipt will establish the international filing date of the application.

Docket No.: 350809-000003

IN THE UNITED STATES PATENT AND TRADEMARK OFFICE

IN RE APPLICATION:	George Shu-Xing Cheng	Conf. No.	3679
SERIAL NUMBER:	12/837,162	Group:	2836
FILED:	July 15, 2010	Examiner:	Unknown
FOR:	SMART AND SCALABLE POWER INVERTERS		

INFORMATION DISCLOSURE STATEMENT UNDER 37 C.F.R. 1.97

Assistant Commissioner for Patents
PO BOX 1450
ALEXANDRIA, VA 22313-1450

July 11, 2011

Sir:

Applicant(s) wish(es) to disclose the following information.

REFERENCES

☒ Applicant(s) wish(es) to make of record the documents listed on the attached Form PTO-1449. Copies of the listed documents are attached, where required, as are either statements of relevancy or any readily available full or partial English translations of any non-English-language documents.

EXPLANATION OF RELEVANCE

The documents listed on the attached Form PTO 1449 were cited in related and corresponding applications. English language abstracts and translations are provided for the convenience of the Examiner where available.

RELATED CASES

☐ Attached is a list of Applicant's(s') pending applications and issued patents which may be related to the present application. Copies of the documents, where required, are attached along with Form PTO-1449.

EAST\45128768.1

CERTIFICATION

The undersigned certifies that

☐ each item of information contained in this Information Disclosure Statement was first cited in any communication from a foreign or international patent office in a counterpart foreign or international application for the first time (to the knowledge of the undersigned, having made reasonable inquiry) not more than three months prior to the filing of this statement (See 37 CFR 1.97(e)(1)).

☐ no item of information contained in this Information Disclosure Statement was cited in a communication from a foreign or international patent office in a counterpart foreign or international application, and, to the knowledge of the undersigned, having made reasonable inquiry, was known to any individual designated in 37 C.F.R. 1.56(c) more than three months prior to the filing of this statement. (See 37 CFR 1.97(e)(2))

BASIS FOR CONSIDERATION

This Information Disclosure Statement is filed:

☐ without fee and within three months of the filing date of the application.
☐ without fee and within three months of the date of entry of the U.S. national stage.
☒ without fee and before the mailing date of a first Office Action on the merits (to the knowledge of the undersigned).
☐ without fee and with the appropriate certification above.
☐ without fee and with a new CPA application.
☐ without fee and with a Request for Continued Examination.
☐ with fee and before the mailing date of any Final Office Action, Notice of Allowance or an action that otherwise closes prosecution (to the knowledge of the undersigned).
☐ with fee, appropriate certification above, and before payment of the Issue Fee.

Application No.: 12/837,162
Attorney Docket No.: 350809-000003

DEPOSIT ACCOUNT

☒ Please charge any additional fees for the papers being filed herewith, or credit any overpayment to Deposit Account No. 50-3266.

Respectfully submitted,

DLA PIPER LLP US

Dale S. Lazar
Registration No. 28,872
Attorney for Applicant

DSL/jcc
P.O. Box 2758
Reston, VA 20195
Tel. 703.773.4000
Fax (703) 773-5200

UNITED STATES PATENT AND TRADEMARK OFFICE

UNITED STATES DEPARTMENT OF COMMERCE
United States Patent and Trademark Office
Address: COMMISSIONER FOR PATENTS
P.O. Box 1450
Alexandria, Virginia 22313-1450
www.uspto.gov

APPLICATION NUMBER	FILING OR 371(C) DATE	FIRST NAMED APPLICANT	ATTY. DOCKET NO./TITLE
12/837,162	07/15/2010	George Shu-Xing CHENG	350809-000003

CONFIRMATION NO. 3679

47604
DLA PIPER LLP US
P. O. BOX 2758
RESTON, VA 20195

PUBLICATION NOTICE

OC000000045562283

Title:SMART AND SCALABLE POWER INVERTERS

Publication No.US-2011-0012430-A1
Publication Date:01/20/2011

NOTICE OF PUBLICATION OF APPLICATION

The above-identified application will be electronically published as a patent application publication pursuant to 37 CFR 1.211, et seq. The patent application publication number and publication date are set forth above.

The publication may be accessed through the USPTO's publically available Searchable Databases via the Internet at www.uspto.gov. The direct link to access the publication is currently http://www.uspto.gov/patft/.

The publication process established by the Office does not provide for mailing a copy of the publication to applicant. A copy of the publication may be obtained from the Office upon payment of the appropriate fee set forth in 37 CFR 1.19(a)(1). Orders for copies of patent application publications are handled by the USPTO's Office of Public Records. The Office of Public Records can be reached by telephone at (703) 308-9726 or (800) 972-6382, by facsimile at (703) 305-8759, by mail addressed to the United States Patent and Trademark Office, Office of Public Records, Alexandria, VA 22313-1450 or via the Internet.

In addition, information on the status of the application, including the mailing date of Office actions and the dates of receipt of correspondence filed in the Office, may also be accessed via the Internet through the Patent Electronic Business Center at www.uspto.gov using the public side of the Patent Application Information and Retrieval (PAIR) system. The direct link to access this status information is currently http://pair.uspto.gov/. Prior to publication, such status information is confidential and may only be obtained by applicant using the private side of PAIR.

Further assistance in electronically accessing the publication, or about PAIR, is available by calling the Patent Electronic Business Center at 1-866-217-9197.

Office of Data Managment, Application Assistance Unit (571) 272-4000, or (571) 272-4200, or 1-888-786-0101

OPAP IAP4 NOV 29 2010 PATENT & TRADEMARK OFFICE

PTO/SB/08a (08-03)
Approved for use through 07/31/2006. OMB 0651-0031
U.S. Patent and Trademark Office; U.S. DEPARTMENT OF COMMERCE

Under the Paperwork Reduction Act of 1995, no persons are required to respond to a collection of information unless it contains a valid OMB control number.

Substitute for form 1449A/PTO

INFORMATION DISCLOSURE STATEMENT BY APPLICANT

(Use as many sheets as necessary)

Sheet 1 of 2

Complete if Known	
Application Number	12/837,162
Filing Date	July 15, 2010
First Named Inventor	Cheng, George et al.
Art Unit	2838
Examiner Name	Unknown
Attorney Docket Number	350809-000003

U. S. PATENT DOCUMENTS

Examiner Initials*	Cite No.[1]	Document Number Number-Kind Code[2] (if known)	Publication Date MM-DD-YYYY	Name of Patentee or Applicant of Cited Document	Pages, Columns, Lines, Where Relevant Passages or Relevant Figures Appear
		US -6,055,524	4/25/2000	Cheng, George	
		US -6,556,980	4/29/2003	Cheng, George	
		US -6,360,131	3/19/2002	Cheng, George	
		US -6,684,115	1/27/2004	Cheng, George	
		US -6,684,112	1/27/2004	Cheng, George	
		US -7,016,743	3/21/2006	Cheng, George	
		US -7,142,626	11/28/2006	Cheng, George	
		US -7,152,052	12/19/2006	Cheng, George	
		US -7,415,446	08/19/2008	Cheng, George	
		US -			
		US -			
		US -			
		US -			
		US -			
		US -			
		US -			
		US -			
		US -			

FOREIGN PATENT DOCUMENTS

Examiner Initials*	Cite No.[1]	Foreign Patent Document Country Code[3] Number[4] Kind Code[5] (if known)	Publication Date MM-DD-YYYY	Name of Patentee or Applicant of Cited Document	Pages, Columns, Lines, Where Relevant Passages or Relevant Figures Appear	T[6]

Examiner Signature	Date Considered	

•EXAMINER: Initial if reference considered, whether or not citation is in conformance with MPEP 609. Draw line through citation if not in conformance and not considered. Include copy of this form with next communication to applicant. 1 Applicant's unique citation designation number (optional). 2 See Kinds Codes of USPTO Patent Documents at www.uspto.gov or MPEP 901.04. 3 Enter Office that issued the document, by the two-letter code (WIPO Standard ST.3). 4 For Japanese patent documents, the indication of the year of the reign of the Emperor must precede the serial number of the patent document. 5 Kind of document by the appropriate symbols as indicated on the document under WIPO Standard ST.16 if possible. 6 Applicant is to place a check mark here if English language Translation is attached.

This collection of information is required by 37 CFR 1.97 and 1.98. The information is required to obtain or retain a benefit by the public which is to file (and by the USPTO to process) an application. Confidentiality is governed by 35 U.S.C. 122 and 37 CFR 1.14. This collection is estimated to take 2 hours to complete, including gathering, preparing, and submitting the completed application form to the USPTO. Time will vary depending upon the individual case. Any comments on the amount of time you require to complete this form and/or suggestions for reducing this burden, should be sent to the Chief Information Officer, U.S. Patent and Trademark Office, U.S. Department of Commerce, P.O. Box 1450, Alexandria, VA 22313-1450. DO NOT SEND FEES OR COMPLETED FORMS TO THIS ADDRESS. SEND TO: **Commissioner for Patents, P.O. Box 1450, Alexandria, VA 22313-1450.**

If you need assistance in completing the form, call 1-800-PTO-9199 and select option 2.

REST1\582188.1

PTO/SB/08a (08-03)
Approved for use through 07/31/2006. OMB 0651-0031
U.S. Patent and Trademark Office; U.S. DEPARTMENT OF COMMERCE
Under the Paperwork Reduction Act of 1995, no persons are required to respond to a collection of information unless it contains a valid OMB control number.

Substitute for form 1449A/PTO

INFORMATION DISCLOSURE STATEMENT BY APPLICANT

(Use as many sheets as necessary)

Sheet	2	of	2

Complete if Known	
Application Number	12/837,162
Filing Date	July 15, 2010
First Named Inventor	Cheng, George et al.
Art Unit	2838
Examiner Name	Unknown
Attorney Docket Number	350809-000003

NON PATENT LITERATURE DOCUMENTS

Examiner Initials*	Cite No.[1]	Include name of the author (in CAPITAL LETTERS), title of the article (when appropriate), title of the item (book, magazine, journal, serial, symposium, catalog, etc.), date, page(s), volume-issue number(s), publisher, city and/or country where published.	T[2]
		RASHID H. MUHAMMAD, Power Electronics Handbook, 2007, Academic Press	

Examiner Signature		Date Considered	

•EXAMINER: Initial if reference considered, whether or not citation is in conformance with MPEP 609. Draw line through citation if not in conformance and not considered. Include copy of this form with next communication to applicant.
[1] Applicant's unique citation designation number (optional). 2 Applicant is to place a check mark here if English language Translation is attached.
This collection of information is required by 37 CFR 1.97 and 1.98. The information is required to obtain or retain a benefit by the public which is to file (and by the USPTO to process) an application. Confidentiality is governed by 35 U.S.C. 122 and 37 CFR 1.14. This collection is estimated to take 2 hours to complete, including gathering, preparing, and submitting the completed application form to the USPTO. Time will vary depending upon the individual case. Any comments on the amount of time you require to complete this form and/or suggestions for reducing this burden, should be sent to the Chief Information Officer, U.S. Patent and Trademark Office, U.S. Department of Commerce, P.O. Box 1450, Alexandria, VA 22313-1450. DO NOT SEND FEES OR COMPLETED FORMS TO THIS ADDRESS. **SEND TO: Commissioner for Patents, P.O. Box 1450, Alexandria, VA 22313-1450.**

If you need assistance in completing the form, call 1-800-PTO-9199 and select option 2.

ARTIFACT SHEET

Enter artifact number below. Artifact number is application number + artifact type code (see list below) + sequential letter (A, B, C …). The first artifact folder for an artifact type receives the letter A, the second B, etc.. Examples: 59123456PA, 59123456PB, 59123456ZA, 59123456ZB

12837162ZA

Indicate quantity of a single type of artifact received but not scanned. Create individual artifact folder/box and artifact number for each Artifact Type.

☐ CD(s) containing:

computer program listing ☐
Doc Code: Computer Artifact Type Code: P

pages of specification and/or sequence listing and/or table ☐
Doc Code: Artifact Artifact Type Code: S

content unspecified or combined ☐
Doc Code: Artifact Artifact Type Code: U

☐ Stapled Set(s) Color Documents or B/W Photographs
Doc Code: Artifact Artifact Type Code: C

☐ Microfilm(s)
Doc Code: Artifact Artifact Type Code: F

☐ Video tape(s)
Doc Code: Artifact Artifact Type Code: V

☐ Model(s)
Doc Code: Artifact Artifact Type Code: M

☐ Bound Document(s)
Doc Code: Artifact Artifact Type Code: B

☐ Confidential Information Disclosure Statement or Other Documents marked Proprietary, Trade Secrets, Subject to Protective Order, Material Submitted under MPEP 724.02, etc.
Doc Code: Artifact Artifact Type Code X

1 Other, description: **BOOK**
Doc Code: Artifact Artifact Type Code: Z

March 8, 2004

OPAP IAP4
NOV 29 2010
PATENT & TRADEMARK OFFICE

DFW

Docket No.: 350809-000003

IN THE UNITED STATES PATENT AND TRADEMARK OFFICE

IN RE APPLICATION:	George Shu-Xing Cheng	Conf. No.	3679
SERIAL NUMBER:	12/837,162	Group:	2838
FILED:	July 15, 2010	Examiner:	Unknown
FOR:	SMART AND SCALABLE POWER INVERTERS		

INFORMATION DISCLOSURE STATEMENT UNDER 37 C.F.R. 1.97

Assistant Commissioner for Patents
PO BOX 1450
ALEXANDRIA, VA 22313-1450

November 29, 2010

Sir:

Applicant(s) wish(es) to disclose the following information.

REFERENCES

☒ Applicant(s) wish(es) to make of record the documents listed on the attached Form PTO-1449. Copies of the listed documents are attached, where required, as are either statements of relevancy or any readily available full or partial English translations of any non-English-language documents.

EXPLANATION OF RELEVANCE

RELATED CASES

☐ Attached is a list of Applicant's(s') pending applications and issued patents which may be related to the present application. Copies of the documents, where required, are attached along with Form PTO-1449.

EAST\43885852.1

CERTIFICATION

The undersigned certifies that

☐ each item of information contained in this Information Disclosure Statement was first cited in any communication from a foreign or international patent office in a counterpart foreign or international application for the first time (to the knowledge of the undersigned, having made reasonable inquiry) not more than three months prior to the filing of this statement (See 37 CFR 1.97(e)(1)).

☐ no item of information contained in this Information Disclosure Statement was cited in a communication from a foreign or international patent office in a counterpart foreign or international application, and, to the knowledge of the undersigned, having made reasonable inquiry, was known to any individual designated in 37 C.F.R. 1.56(c) more than three months prior to the filing of this statement. (See 37 CFR 1.97(e)(2))

BASIS FOR CONSIDERATION

This Information Disclosure Statement is filed:

☐ without fee and within three months of the filing date of the application.
☐ without fee and within three months of the date of entry of the U.S. national stage.
☒ without fee and before the mailing date of a first Office Action on the merits (to the knowledge of the undersigned).
☐ without fee and with the appropriate certification above.
☐ without fee and with a new CPA application.
☐ without fee and with a Request for Continued Examination.
☐ with fee and before the mailing date of any Final Office Action, Notice of Allowance or an action that otherwise closes prosecution (to the knowledge of the undersigned).
☐ with fee, appropriate certification above, and before payment of the Issue Fee.

Application No.: 12/837,162
Attorney Docket No.: 350809-000003

DEPOSIT ACCOUNT

☒ Please charge any additional fees for the papers being filed herewith, or credit any overpayment to Deposit Account No. 50-3266.

Respectfully submitted,

DLA PIPER LLP US

Dale S. Lazar
Registration No. 28,872
Attorney for Applicant

DSL/jcc
P.O. Box 2758
Reston, VA 20195
Tel. 703.773.4000
Fax (703) 773-5200

UNITED STATES PATENT AND TRADEMARK OFFICE

UNITED STATES DEPARTMENT OF COMMERCE
United States Patent and Trademark Office
Address: COMMISSIONER FOR PATENTS
P.O. Box 1450
Alexandria, Virginia 22313-1450
www.uspto.gov

APPLICATION NUMBER	FILING or 371(c) DATE	GRP ART UNIT	FIL FEE REC'D	ATTY.DOCKET.NO	TOT CLAIMS	IND CLAIMS
12/837,162	07/15/2010	2838	1422	350809-000003	28	7

CONFIRMATION NO. 3679

UPDATED FILING RECEIPT

47604
DLA PIPER LLP US
P. O. BOX 2758
RESTON, VA 20195

OC000000043198860

Date Mailed: 08/25/2010

Receipt is acknowledged of this non-provisional patent application. The application will be taken up for examination in due course. Applicant will be notified as to the results of the examination. Any correspondence concerning the application must include the following identification information: the U.S. APPLICATION NUMBER, FILING DATE, NAME OF APPLICANT, and TITLE OF INVENTION. Fees transmitted by check or draft are subject to collection. Please verify the accuracy of the data presented on this receipt. **If an error is noted on this Filing Receipt, please submit a written request for a Filing Receipt Correction. Please provide a copy of this Filing Receipt with the changes noted thereon. If you received a "Notice to File Missing Parts" for this application, please submit any corrections to this Filing Receipt with your reply to the Notice. When the USPTO processes the reply to the Notice, the USPTO will generate another Filing Receipt incorporating the requested corrections**

Applicant(s)

George Shu-Xing CHENG, Folsom, CA;
Steven L. Mulkey, Cameron Park, CA;

Assignment For Published Patent Application

GENERAL CYBERNATION GROUP, INC., RANCHO CORDOVA, CA

Power of Attorney: The patent practitioners associated with Customer Number 47604

Domestic Priority data as claimed by applicant

This appln claims benefit of 61/226,141 07/16/2009

Foreign Applications

Permission to Access - A proper **Authorization to Permit Access to Application by Participating Offices** (PTO/SB/39 or its equivalent) has been received by the USPTO.

If Required, Foreign Filing License Granted: 07/27/2010

The country code and number of your priority application, to be used for filing abroad under the Paris Convention, is **US 12/837,162**

Projected Publication Date: 01/20/2011

Non-Publication Request: No

Early Publication Request: No
**** SMALL ENTITY ****

Title

SMART AND SCALABLE POWER INVERTERS

Preliminary Class

363

PROTECTING YOUR INVENTION OUTSIDE THE UNITED STATES

Since the rights granted by a U.S. patent extend only throughout the territory of the United States and have no effect in a foreign country, an inventor who wishes patent protection in another country must apply for a patent in a specific country or in regional patent offices. Applicants may wish to consider the filing of an international application under the Patent Cooperation Treaty (PCT). An international (PCT) application generally has the same effect as a regular national patent application in each PCT-member country. The PCT process **simplifies** the filing of patent applications on the same invention in member countries, but **does not result** in a grant of "an international patent" and does not eliminate the need of applicants to file additional documents and fees in countries where patent protection is desired.

Almost every country has its own patent law, and a person desiring a patent in a particular country must make an application for patent in that country in accordance with its particular laws. Since the laws of many countries differ in various respects from the patent law of the United States, applicants are advised to seek guidance from specific foreign countries to ensure that patent rights are not lost prematurely.

Applicants also are advised that in the case of inventions made in the United States, the Director of the USPTO must issue a license before applicants can apply for a patent in a foreign country. The filing of a U.S. patent application serves as a request for a foreign filing license. The application's filing receipt contains further information and guidance as to the status of applicant's license for foreign filing.

Applicants may wish to consult the USPTO booklet, "General Information Concerning Patents" (specifically, the section entitled "Treaties and Foreign Patents") for more information on timeframes and deadlines for filing foreign patent applications. The guide is available either by contacting the USPTO Contact Center at 800-786-9199, or it can be viewed on the USPTO website at http://www.uspto.gov/web/offices/pac/doc/general/index.html.

For information on preventing theft of your intellectual property (patents, trademarks and copyrights), you may wish to consult the U.S. Government website, http://www.stopfakes.gov. Part of a Department of Commerce initiative, this website includes self-help "toolkits" giving innovators guidance on how to protect intellectual property in specific countries such as China, Korea and Mexico. For questions regarding patent enforcement issues, applicants may call the U.S. Government hotline at 1-866-999-HALT (1-866-999-4158).

LICENSE FOR FOREIGN FILING UNDER

Title 35, United States Code, Section 184

Title 37, Code of Federal Regulations, 5.11 & 5.15

GRANTED

The applicant has been granted a license under 35 U.S.C. 184, if the phrase "IF REQUIRED, FOREIGN FILING LICENSE GRANTED" followed by a date appears on this form. Such licenses are issued in all applications where the conditions for issuance of a license have been met, regardless of whether or not a license may be required as

set forth in 37 CFR 5.15. The scope and limitations of this license are set forth in 37 CFR 5.15(a) unless an earlier license has been issued under 37 CFR 5.15(b). The license is subject to revocation upon written notification. The date indicated is the effective date of the license, unless an earlier license of similar scope has been granted under 37 CFR 5.13 or 5.14.

This license is to be retained by the licensee and may be used at any time on or after the effective date thereof unless it is revoked. This license is automatically transferred to any related applications(s) filed under 37 CFR 1.53(d). This license is not retroactive.

The grant of a license does not in any way lessen the responsibility of a licensee for the security of the subject matter as imposed by any Government contract or the provisions of existing laws relating to espionage and the national security or the export of technical data. Licensees should apprise themselves of current regulations especially with respect to certain countries, of other agencies, particularly the Office of Defense Trade Controls, Department of State (with respect to Arms, Munitions and Implements of War (22 CFR 121-128)); the Bureau of Industry and Security, Department of Commerce (15 CFR parts 730-774); the Office of Foreign AssetsControl, Department of Treasury (31 CFR Parts 500+) and the Department of Energy.

NOT GRANTED

No license under 35 U.S.C. 184 has been granted at this time, if the phrase "IF REQUIRED, FOREIGN FILING LICENSE GRANTED" DOES NOT appear on this form. Applicant may still petition for a license under 37 CFR 5.12, if a license is desired before the expiration of 6 months from the filing date of the application. If 6 months has lapsed from the filing date of this application and the licensee has not received any indication of a secrecy order under 35 U.S.C. 181, the licensee may foreign file the application pursuant to 37 CFR 5.15(b).

DLA PIPER US LLP
P.O. Box 2758
Reston, VA 20195
Telephone: 703-773-4149
Facsimile: (703) 773-5200

DOCKET NO.: 350809-000003

ATTENTION: APPLICATION BRANCH

THIS IS A RESPONSE TO A NOTICE TO FILE MISSING PARTS OF APPLICATION

MAIL BOX MISSING PARTS
ASSISTANT COMMISSIONER FOR PATENTS
PO BOX 1450
ALEXANDRIA, VA 22313-1450

Re:	Application No:	12/837,162
	Applicant(s)	Cheng, George Shu-Xing et al.
	Filed:	July 15, 2010
	For:	SMART AND SCALABLE POWER INVERTERS

SIR:

Attached hereto for filing are the following papers:

Declaration
PTO-875 Fee Worksheet

Our payment in the amount of $1,422.00 is submitted herewith. In the event any variance exists between the amount enclosed and the Patent Office charges for filing the above-noted documents, please charge or credit the difference to our Deposit Account No. 50-3266.

Respectfully submitted,

DLA PIPER LLP US

Dale S. Lazar
Registration No. 28,872
Attorney for Applicant

DSL/jcc
August 12, 2010

EAST\43206030.1

Electronic Patent Application Fee Transmittal

Application Number:	12837162
Filing Date:	15-Jul-2010
Title of Invention:	SMART AND SCALABLE POWER INVERTERS
First Named Inventor/Applicant Name:	George Shu-Xing CHENG
Filer:	Dale S. Lazar/Josefina Cheng
Attorney Docket Number:	350809-000003

Filed as Small Entity

Utility under 35 USC 111(a) Filing Fees

Description	Fee Code	Quantity	Amount	Sub-Total in USD($)
Basic Filing:				
Utility filing Fee (Electronic filing)	4011	1	82	82
Utility Search Fee	2111	1	270	270
Utility Examination Fee	2311	1	110	110
Pages:				
Claims:				
Claims in excess of 20	2202	10	26	260
Independent claims in excess of 3	2201	4	110	440
Multiple dependent claims	2203	1	195	195

Description	Fee Code	Quantity	Amount	Sub-Total in USD($)
Miscellaneous-Filing:				
Late filing fee for oath or declaration	2051	1	65	65
Petition:				
Patent-Appeals-and-Interference:				
Post-Allowance-and-Post-Issuance:				
Extension-of-Time:				
Miscellaneous:				
			Total in USD ($)	**1422**

Electronic Acknowledgement Receipt

EFS ID:	8195444
Application Number:	12837162
International Application Number:	
Confirmation Number:	3679
Title of Invention:	SMART AND SCALABLE POWER INVERTERS
First Named Inventor/Applicant Name:	George Shu-Xing CHENG
Customer Number:	47604
Filer:	Dale S. Lazar/Josefina Cheng
Filer Authorized By:	Dale S. Lazar
Attorney Docket Number:	350809-000003
Receipt Date:	12-AUG-2010
Filing Date:	15-JUL-2010
Time Stamp:	14:47:01
Application Type:	Utility under 35 USC 111(a)

Payment information:

Submitted with Payment	yes
Payment Type	Credit Card
Payment was successfully received in RAM	$1422
RAM confirmation Number	904
Deposit Account	
Authorized User	

File Listing:

Document Number	Document Description	File Name	File Size(Bytes)/ Message Digest	Multi Part /.zip	Pages (if appl.)

1	Oath or Declaration filed	350809-3DEC.pdf	880377 74ea3e4860d81f89db1d999cb0fe672803e1aaab	no	2
Warnings:					
Information:					
2	Miscellaneous Incoming Letter	350809-3MPTransmittal.pdf	282874 2295042290ec656c088060e6552f8d5c4f001830	no	1
Warnings:					
Information:					
3	Fee Worksheet (PTO-875)	fee-info.pdf	41716 5908c17368ec89a0a1d2dec6589c045eb34b4cce	no	2
Warnings:					
Information:					
			Total Files Size (in bytes):	1204967	

This Acknowledgement Receipt evidences receipt on the noted date by the USPTO of the indicated documents, characterized by the applicant, and including page counts, where applicable. It serves as evidence of receipt similar to a Post Card, as described in MPEP 503.

<u>New Applications Under 35 U.S.C. 111</u>
If a new application is being filed and the application includes the necessary components for a filing date (see 37 CFR 1.53(b)-(d) and MPEP 506), a Filing Receipt (37 CFR 1.54) will be issued in due course and the date shown on this Acknowledgement Receipt will establish the filing date of the application.

<u>National Stage of an International Application under 35 U.S.C. 371</u>
If a timely submission to enter the national stage of an international application is compliant with the conditions of 35 U.S.C. 371 and other applicable requirements a Form PCT/DO/EO/903 indicating acceptance of the application as a national stage submission under 35 U.S.C. 371 will be issued in addition to the Filing Receipt, in due course.

<u>New International Application Filed with the USPTO as a Receiving Office</u>
If a new international application is being filed and the international application includes the necessary components for an international filing date (see PCT Article 11 and MPEP 1810), a Notification of the International Application Number and of the International Filing Date (Form PCT/RO/105) will be issued in due course, subject to prescriptions concerning national security, and the date shown on this Acknowledgement Receipt will establish the international filing date of the application.

ALL PATENTS, INCLUDING DESIGN FOR APPLICATION BASED ON PCT, PARIS CONVENTION, NON PRIORITY, OR PROVISIONAL APPLICATIONS	**COMBINED DECLARATION AND POWER OF ATTORNEY U.S.A.**	FOR ATTORNEYS' USE ONLY ATTORNEYS' DOCKET NO. **350809-000003**

As a below named inventor, I declare that my residence, post office address and citizenship are stated below next to my name, the information given herein is true, that I believe that I am the original, first and sole inventor (if only one name is listed at 101 below), or an original, first and joint inventor (if plural inventors are named below at 101-103, or on additional sheets attached hereto) of the subject matter which is claimed and for which patent is sought on the invention entitled:

Title **SMART AND SCALABLE POWER INVERTERS**

which is described and claimed in:

☐ PCT International Application No. , filed , (if applicable) and amended on

☐ the attached specification

☒ the specification in application Serial No. **12/837,162,** filed **July 15, 2010**

I (We) hereby state that I (We) have reviewed and understand the contents of the above-identified specification, including the claims, as amended by any amendment referred to above.

I (We) acknowledge the duty to disclose information which is material to patentability as defined in Title 37, Code of Federal Regulations, §1.56.

I (We) hereby claim foreign priority benefits under Title 35, United States Code, §119 (a)-(d) or §365 (b) of any foreign application(s) for patent or inventor's certificate, or §365(a) of any PCT international application which designated at least one country other than the United States, listed below and have also identified below any foreign application for patent or inventor's certificate or §365(b) having a filing date before that of the application on which priority is claimed.

Prior Foreign Application(s)			Priority Claimed	
			☐	☐
(Number)	(Country)	(Day/Month/Year Filed)	Yes	No
			☐	☐
(Number)	(Country)	(Day/Month/Year Filed)	Yes	No
			☐	☐
(Number)	(Country)	(Day/Month/Year Filed)	Yes	No

☒ **Authorization To Permit Access To Application by Participating Offices**

If checked, the undersigned hereby grants the USPTO authority to provide the European Patent Office (EPO), the Japan Patent Office (JPO), the Korean Intellectual Property Office (KIPO), and any other intellectual property offices in which a foreign application claiming priority to the above-identified application is filed access to the above-identified patent application. See 37 CFR 1.14(c) and (h). This box should not be checked if the applicant does not wish the EPO, JPO, or other intellectual property office in which a foreign application claiming priority to the above-identified application is filed to have access to the application.

In accordance with 37 CFR 1.14(h)(3), access will be provided to a copy of the application-as-filed with respect to: 1) the above-identified application, 2) any foreign application to which the above-identified application claims priority under 35 USC 119(a)-(d) if a copy of the foreign application that satisfies the certified copy requirement of 37 CFR 1.55 has been filed in the above-identified US application, and 3) any U.S. application from which benefit is sought in the above-identified application.

In accordance with 37 CFR 1.14(c), access may be provided to information concerning the date of filing the Authorization to Permit Access to Application by Participating Offices.

I hereby claim the benefit under Title 35, United States Code, § 119(e) of any United States provisional application(s) listed below:

Application No **61/226,141**	Filing Date **July 16, 2009**	Application No	Filing Date

I hereby claim the benefit under Title 35, United States Code, §120 of any United States application(s), or §365 (c) of any PCT international application designating the United States, listed below and, insofar as the subject matter of each of the claims of this application is not disclosed in the prior United States or PCT international application in the manner provided by the first paragraph of Title 35, United States Code, §112, I acknowledge the duty to disclose information which is material to patentability as defined in 37 CFR §1.56 which became available between the filing date of the prior application and the national or PCT international filing date of this application:

(Application Serial No.)	(Filing Date)	(Status: patented, pending, abandoned)

POWER OF ATTORNEY: I (We) hereby appoint DLA Piper LLP US, Intellectual Property Group, telephone number (730) 773-4000 (to whom all communications are to be directed), and persons of that firm who as associated with USPTO Customer No.

47604

, individually and collectively my attorneys, with full powers of substitution and revocation, to prosecute this application and to transact all business in the USPTO connected therewith.

*Inventor(s) name must include at least one unabbreviated first or middle name.

101	FULL NAME * OF INVENTOR	FAMILY NAME: **CHENG**	GIVEN NAME: **George**	MIDDLE NAME: **Shu-Xing**
	RESIDENCE & CITIZENSHIP	CITY: **Folsom**	STATE OR FOREIGN COUNTRY: **CA**	COUNTRY OF CITIZENSHIP: **United States**
	POST OFFICE ADDRESS	POST OFFICE ADDRESS: **135 Hopper Lane**	CITY: **Folsom**	STATE OR COUNTRY: **CA** / ZIP CODE: **95630**
102	FULL NAME * OF INVENTOR	FAMILY NAME: **MULKEY**	GIVEN NAME: **Steven**	MIDDLE NAME: **L.**
	RESIDENCE & CITIZENSHIP	CITY: **Cameron Park**	STATE OR FOREIGN COUNTRY: **CA**	COUNTRY OF CITIZENSHIP: **United States**
	POST OFFICE ADDRESS	POST OFFICE ADDRESS: **2687 Hillcrest Drive**	CITY: **Cameron Park**	STATE OR COUNTRY: **CA** / ZIP CODE: **95682**
103	FULL NAME * OF INVENTOR	FAMILY NAME:	GIVEN NAME:	MIDDLE NAME:
	RESIDENCE & CITIZENSHIP	CITY:	STATE OR FOREIGN COUNTRY:	COUNTRY OF CITIZENSHIP:
	POST OFFICE ADDRESS	POST OFFICE ADDRESS:	CITY:	STATE OR COUNTRY: / ZIP CODE:

DLA Piper US LLP
P.O. Box 2758, Reston, VA 20195

EAST\43174221.1

U.S. PATENTS, DISCLOSED DESIGN OR APPLICATIONS BASED ON PCT, SERIES CONVENTION PROVISIONAL, OR PROVISIONAL APPLICATIONS	**COMBINED DECLARATION AND POWER OF ATTORNEY U.S.A.**	FOR ATTORNEYS USE ONLY ATTORNEYS DOCKET NO. 350809-000003

I further declare that all statements made herein of my own knowledge are true and that all statements made on information and belief are believed to be true, and further that these statements were made with the knowledge that willful false statements and the like so made are punishable by fine or imprisonment or both, under section 1001 of Title 18 of the United States Code, and that such willful false statements may jeopardize the validity of the application or any patent issuing thereon.

SIGNATURE OF INVENTOR 102	SIGNATURE OF INVENTOR 103	SIGNATURE OF INVENTOR 104
DATE 8/6/2010	DATE 8/6/2010	DATE
SIGNATURE OF INVENTOR 105	SIGNATURE OF INVENTOR 106	SIGNATURE OF INVENTOR 107
DATE	DATE	DATE

DLA Piper US LLP
P.O. Box 2758 Reston, VA 20195

UNITED STATES PATENT AND TRADEMARK OFFICE

UNITED STATES DEPARTMENT OF COMMERCE
United States Patent and Trademark Office
Address: COMMISSIONER FOR PATENTS
P.O. Box 1450
Alexandria, Virginia 22313-1450
www.uspto.gov

APPLICATION NUMBER	FILING OR 371(C) DATE	FIRST NAMED APPLICANT	ATTY. DOCKET NO./TITLE
12/837,162	07/15/2010	George Shu-Xing CHENG	350809-000003

CONFIRMATION NO. 3679

FORMALITIES LETTER

47604
DLA PIPER LLP US
P. O. BOX 2758
RESTON, VA 20195

OC000000042760576

Date Mailed: 07/28/2010

NOTICE TO FILE MISSING PARTS OF NONPROVISIONAL APPLICATION

FILED UNDER 37 CFR 1.53(b)

Filing Date Granted

Items Required To Avoid Abandonment:

An application number and filing date have been accorded to this application. The item(s) indicated below, however, are missing. Applicant is given **TWO MONTHS** from the date of this Notice within which to file all required items and pay any fees required below to avoid abandonment. Extensions of time may be obtained by filing a petition accompanied by the extension fee under the provisions of 37 CFR 1.136(a).

- The statutory basic filing fee is missing.
  *Applicant must submit $**82** to complete the basic filing fee for a small entity.*
- The oath or declaration is missing.
  A properly signed oath or declaration in compliance with 37 CFR 1.63, identifying the application by the above Application Number and Filing Date, is required.
  Note: If a petition under 37 CFR 1.47 is being filed, an oath or declaration in compliance with 37 CFR 1.63 signed by all available joint inventors, or if no inventor is available by a party with sufficient proprietary interest, is required.

The applicant needs to satisfy supplemental fees problems indicated below.

The required item(s) identified below must be timely submitted to avoid abandonment:

- Additional claim fees of $**895** as a small entity, including any required multiple dependent claim fee, are required. Applicant must submit the additional claim fees or cancel the additional claims for which fees are due.
- To avoid abandonment, a surcharge (for late submission of filing fee, search fee, examination fee or oath or declaration) as set forth in 37 CFR 1.16(f) of $**65** for a small entity in compliance with 37 CFR 1.27, must be submitted with the missing items identified in this notice.

SUMMARY OF FEES DUE:

Total additional fee(s) required for this application is $**1422** for a small entity
- $**82** Statutory basic filing fee.
- $**65** Surcharge.
- The application search fee has not been paid. Applicant must submit $**270** to complete the search fee.

- The application examination fee has not been paid. Applicant must submit $**110** to complete the examination fee for a small entity in compliance with 37 CFR 1.27.
- Total additional claim fee(s) for this application is $**895**
  - $**440** for **4** independent claims over 3.
  - $**260** for **10** total claims over 20.
  - $**195** for multiple dependent claim surcharge.

Replies should be mailed to:

Mail Stop Missing Parts
Commissioner for Patents
P.O. Box 1450
Alexandria VA 22313-1450

Registered users of EFS-Web may alternatively submit their reply to this notice via EFS-Web.
https://sportal.uspto.gov/authenticate/AuthenticateUserLocalEPF.html

For more information about EFS-Web please call the USPTO Electronic Business Center at **1-866-217-9197** or visit our website at http://www.uspto.gov/ebc.

If you are not using EFS-Web to submit your reply, you must include a copy of this notice.

/tly/

Office of Data Management, Application Assistance Unit (571) 272-4000, or (571) 272-4200, or 1-888-786-0101

UNITED STATES PATENT AND TRADEMARK OFFICE

UNITED STATES DEPARTMENT OF COMMERCE
United States Patent and Trademark Office
Address: COMMISSIONER FOR PATENTS
P.O. Box 1450
Alexandria, Virginia 22313-1450
www.uspto.gov

APPLICATION NUMBER	FILING or 371(c) DATE	GRP ART UNIT	FIL FEE REC'D	ATTY.DOCKET.NO	TOT CLAIMS	IND CLAIMS
12/837,162	07/15/2010	2838	0.00	350809-000003	28	7

CONFIRMATION NO. 3679

47604
DLA PIPER LLP US
P. O. BOX 2758
RESTON, VA 20195

FILING RECEIPT

OC000000042760575

Date Mailed: 07/28/2010

Receipt is acknowledged of this non-provisional patent application. The application will be taken up for examination in due course. Applicant will be notified as to the results of the examination. Any correspondence concerning the application must include the following identification information: the U.S. APPLICATION NUMBER, FILING DATE, NAME OF APPLICANT, and TITLE OF INVENTION. Fees transmitted by check or draft are subject to collection. Please verify the accuracy of the data presented on this receipt. **If an error is noted on this Filing Receipt, please submit a written request for a Filing Receipt Correction. Please provide a copy of this Filing Receipt with the changes noted thereon. If you received a "Notice to File Missing Parts" for this application, please submit any corrections to this Filing Receipt with your reply to the Notice. When the USPTO processes the reply to the Notice, the USPTO will generate another Filing Receipt incorporating the requested corrections**

Applicant(s)

George Shu-Xing CHENG, Folsom, CA;
Steven L. Mulkey, Cameron Park, CA;

Assignment For Published Patent Application

GENERAL CYBERNATION GROUP, INC., RANCHO CORDOVA, CA

Power of Attorney: None

Domestic Priority data as claimed by applicant

This appln claims benefit of 61/226,141 07/16/2009

Foreign Applications

If Required, Foreign Filing License Granted: 07/27/2010

The country code and number of your priority application, to be used for filing abroad under the Paris Convention, is **US 12/837,162**

Projected Publication Date: To Be Determined - pending completion of Missing Parts

Non-Publication Request: No

Early Publication Request: No
** **SMALL ENTITY** **

Title

SMART AND SCALABLE POWER INVERTERS

Preliminary Class

363

PROTECTING YOUR INVENTION OUTSIDE THE UNITED STATES

Since the rights granted by a U.S. patent extend only throughout the territory of the United States and have no effect in a foreign country, an inventor who wishes patent protection in another country must apply for a patent in a specific country or in regional patent offices. Applicants may wish to consider the filing of an international application under the Patent Cooperation Treaty (PCT). An international (PCT) application generally has the same effect as a regular national patent application in each PCT-member country. The PCT process **simplifies** the filing of patent applications on the same invention in member countries, but **does not result** in a grant of "an international patent" and does not eliminate the need of applicants to file additional documents and fees in countries where patent protection is desired.

Almost every country has its own patent law, and a person desiring a patent in a particular country must make an application for patent in that country in accordance with its particular laws. Since the laws of many countries differ in various respects from the patent law of the United States, applicants are advised to seek guidance from specific foreign countries to ensure that patent rights are not lost prematurely.

Applicants also are advised that in the case of inventions made in the United States, the Director of the USPTO must issue a license before applicants can apply for a patent in a foreign country. The filing of a U.S. patent application serves as a request for a foreign filing license. The application's filing receipt contains further information and guidance as to the status of applicant's license for foreign filing.

Applicants may wish to consult the USPTO booklet, "General Information Concerning Patents" (specifically, the section entitled "Treaties and Foreign Patents") for more information on timeframes and deadlines for filing foreign patent applications. The guide is available either by contacting the USPTO Contact Center at 800-786-9199, or it can be viewed on the USPTO website at http://www.uspto.gov/web/offices/pac/doc/general/index.html.

For information on preventing theft of your intellectual property (patents, trademarks and copyrights), you may wish to consult the U.S. Government website, http://www.stopfakes.gov. Part of a Department of Commerce initiative, this website includes self-help "toolkits" giving innovators guidance on how to protect intellectual property in specific countries such as China, Korea and Mexico. For questions regarding patent enforcement issues, applicants may call the U.S. Government hotline at 1-866-999-HALT (1-866-999-4158).

LICENSE FOR FOREIGN FILING UNDER

Title 35, United States Code, Section 184

Title 37, Code of Federal Regulations, 5.11 & 5.15

GRANTED

The applicant has been granted a license under 35 U.S.C. 184, if the phrase "IF REQUIRED, FOREIGN FILING LICENSE GRANTED" followed by a date appears on this form. Such licenses are issued in all applications where the conditions for issuance of a license have been met, regardless of whether or not a license may be required as

set forth in 37 CFR 5.15. The scope and limitations of this license are set forth in 37 CFR 5.15(a) unless an earlier license has been issued under 37 CFR 5.15(b). The license is subject to revocation upon written notification. The date indicated is the effective date of the license, unless an earlier license of similar scope has been granted under 37 CFR 5.13 or 5.14.

This license is to be retained by the licensee and may be used at any time on or after the effective date thereof unless it is revoked. This license is automatically transferred to any related applications(s) filed under 37 CFR 1.53(d). This license is not retroactive.

The grant of a license does not in any way lessen the responsibility of a licensee for the security of the subject matter as imposed by any Government contract or the provisions of existing laws relating to espionage and the national security or the export of technical data. Licensees should apprise themselves of current regulations especially with respect to certain countries, of other agencies, particularly the Office of Defense Trade Controls, Department of State (with respect to Arms, Munitions and Implements of War (22 CFR 121-128)); the Bureau of Industry and Security, Department of Commerce (15 CFR parts 730-774); the Office of Foreign AssetsControl, Department of Treasury (31 CFR Parts 500+) and the Department of Energy.

NOT GRANTED

No license under 35 U.S.C. 184 has been granted at this time, if the phrase "IF REQUIRED, FOREIGN FILING LICENSE GRANTED" DOES NOT appear on this form. Applicant may still petition for a license under 37 CFR 5.12, if a license is desired before the expiration of 6 months from the filing date of the application. If 6 months has lapsed from the filing date of this application and the licensee has not received any indication of a secrecy order under 35 U.S.C. 181, the licensee may foreign file the application pursuant to 37 CFR 5.15(b).

UTILITY PATENT APPLICATION TRANSMITTAL (Only for new nonprovisional applications under 37 CFR 1.53(b))	Attorney Docket No.	350809-000003
	First Inventor or Application Identifier	George Shu-Xing CHENG
	Title	SMART AND SCALABLE POWER INVERTERS

APPLICATION ELEMENTS
See MPEP chapter 600 concerning utility patent application contents

ADDRESS TO: Assistant Commissioner for Patents
Box Patent Application
PO Box 1450
Alexandria, VA 22313-1450

1. ☐ Fee Transmittal Form (e.g. PTO/SB/17)
(Submit an original and a duplicate for fee processing)
☒ Applicant claims small entity status.
2. ☒ Specification Total Pages 29
3. ☒ Drawing(s) (*35 U.S.C. 113*) Total Sheets 15
4. ☐ Oath or Declaration Total Pages ____
a. ☐ Newly executed (original or copy)
b. ☐ Copy from a prior application *(37 C.F.R. §1.63(d))*
(for continuation/divisional with box 16 completed)
5. ☐ Incorporation By Reference (*usable if box 4B is checked*)
The entire disclosure of the prior application, from which a copy of the oath or declaration is supplied under Box 4B, is considered to be part of the disclosure of the accompanying application and is hereby incorporated by reference therein.

ACCOMPANYING DOCUMENTS
6. ☐ Assignment Papers (cover sheet & documents(s))
7. ☐ 37 C.F.R. §3.73(b) Statement *(when there is an assignee)* ☐ Power of Attorney
8. ☐ English Translation Document *(if applicable)*
9. ☐ Information Disclosure Statement (IDS)/PTO-1449 ☐ Copies of IDS Citations
10. ☐ Preliminary Amendment
11. ☐ White Advance Serial No. Postcard
12. ☐ Certified Copy of Priority Document(s) *(if foreign priority is claimed)*
13. ☐ Request for Priority
14. ☒ Application Data Sheet
15. ☐ Other:

16. If a CONTINUING APPLICATION, check appropriate box, and supply the requisite information below:
☐ Continuation ☐ Divisional ☐ Continuation-in-part (CIP) of prior application no.:
Prior application information: Examiner: Group Art Unit:

17.
☐ This application is a ☐ Continuation ☐ Division ☐ Continuation-in-part (CIP)
of application Serial No. Filed on

☒ This application claims priority of U.S. Provisional Patent Application Serial No. 61/226,141, Filed July 16, 2009

18. CORRESPONDENCE ADDRESS

47604

Name	Dale S. Lazar		Registration No.	28,872	
Signature		Date	July 15, 2010	Telephone	703-773-4149

EAST\43091643.1

APPLICATION DATA SHEET

Application Information

Application Number::	
Filing Date::	
Application Type::	REGULAR
Subject Matter::	UTILITY
Suggested Classification::	
Suggested Group Art Unit::	
CD-ROM or CD-R::	NONE
Number of Disks::	
Number of copies of CDs::	
Sequence Submission::	
Computer Readable Form (CRF)::	NO
Number of Copies of CRF::	
Title::	SMART AND SCALABLE POWER INVERTERS
Attorney Docket Number::	350809-000003
Request for Early Publication::	NO
Request for Non-Publication::	NO
Suggested Drawing Figure::	
Total Drawing Sheets::	15
Small Entity::	YES
Latin Name::	
Variety Denomination Name::	
Petition Included::	NO
Petition Type::	
Licensed US Govt. Agency::	
Contract of Grant Numbers::	
Secrecy Order in Parent Appln.::	NO

INITIAL
7/15/2010

APPLICANT INFORMATION

Applicant Authority Type::	INVENTOR
Primary Citizenship Country::	UNITED STATES
Status::	FULL CAPACITY
Given Name::	GEORGE
Middle Name::	SHU-XING
Family Name::	CHENG
Name Suffix::	
City of Residence::	FOLSOM
State or Province of Residence::	CA
Country of Residence::	UNITED STATES
Street of mailing address::	135 HOPPER LANE
City of mailing address::	FOLSOM
State or Province of mailing address::	CA
Country of mailing address::	UNITED STATES
Postal or Zip Code of mailing address::	95630

Applicant Authority Type::	INVENTOR
Primary Citizenship Country::	UNITED STATES
Status::	FULL CAPACITY
Given Name::	STEVEN
Middle Name::	L.
Family Name::	MULKEY
Name Suffix::	
City of Residence::	CAMERON PARK
State or Province of	CA

Residence::	
Country of Residence::	UNITES STATES
Street of mailing address::	2687 HILLCREST DRIVE
City of mailing address::	CAMERON PARK
State or Province of mailing address::	CA
Country of mailing address::	UNITED STATES
Postal or Zip Code of mailing address::	95682

CORRESPONDENCE INFORMATION

CORRESPONDENCE NUMBER::	47604
PHONE NUMBER::	703-773-4149
FAX NUMBER::	703-773-5200
E-MAIL ADDRESS::	DALE.LAZAR@DLAPIPER.COM

REPRESENTATIVE INFORMATION

Representative Customer Number::	47604

DOMESTIC PRIORITY INFORMATION

Application::	Continuity Type::	Parent Application::	Parent Filing Date::
This Application	An application claiming the benefit under 35 USC 119 (e)	61/226,141	7/16/2009

INITIAL
7/15/2010

FOREIGN PRIORITY INFORMATION

Country::	Application Number::	Filing Date::	Priority Claimed

ASSIGNEE INFORMATION

Assignee Name::	GENERAL CYBERNATION GROUP, INC.
Street mailing address::	2868 PROSPECT PARK DRIVE, SUITE 300
City mailing address::	RANCHO CORDOVA
State or Province of mailing address::	CA
Country of mailing address::	UNITED STATES
Postal or Zip Code of mailing address::	95670

INITIAL
7/15/2010

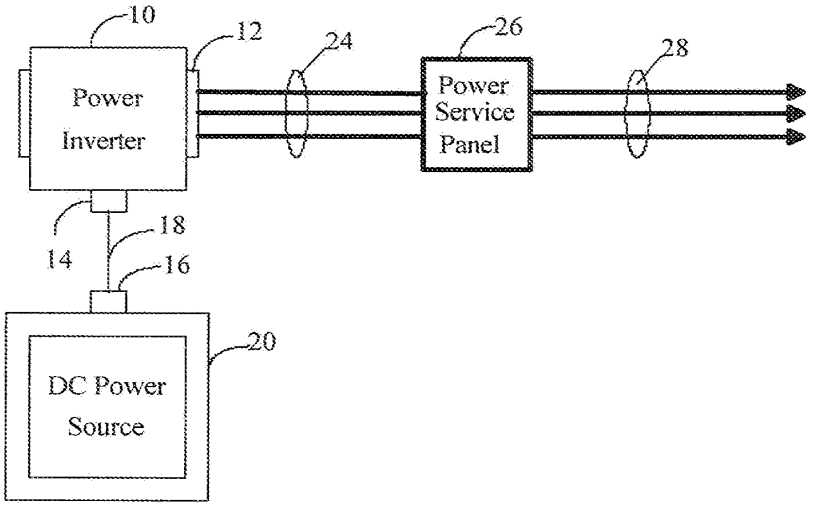
10
12
24
26
28
Power
Inverter
Power
Service
Panel
14
18
16
20
DC Power
Source

Fig. 1

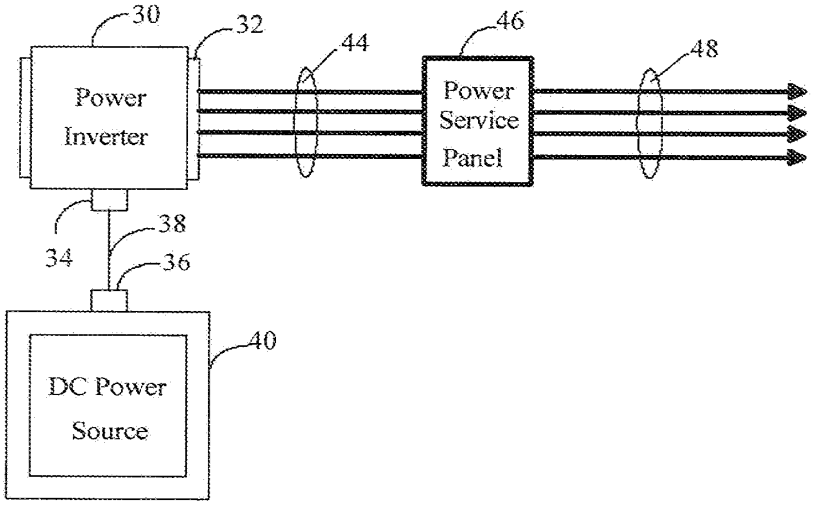
30
32
44
46
48
Power
Inverter
Power
Service
Panel
34
38
36
40
DC Power
Source

Fig. 2

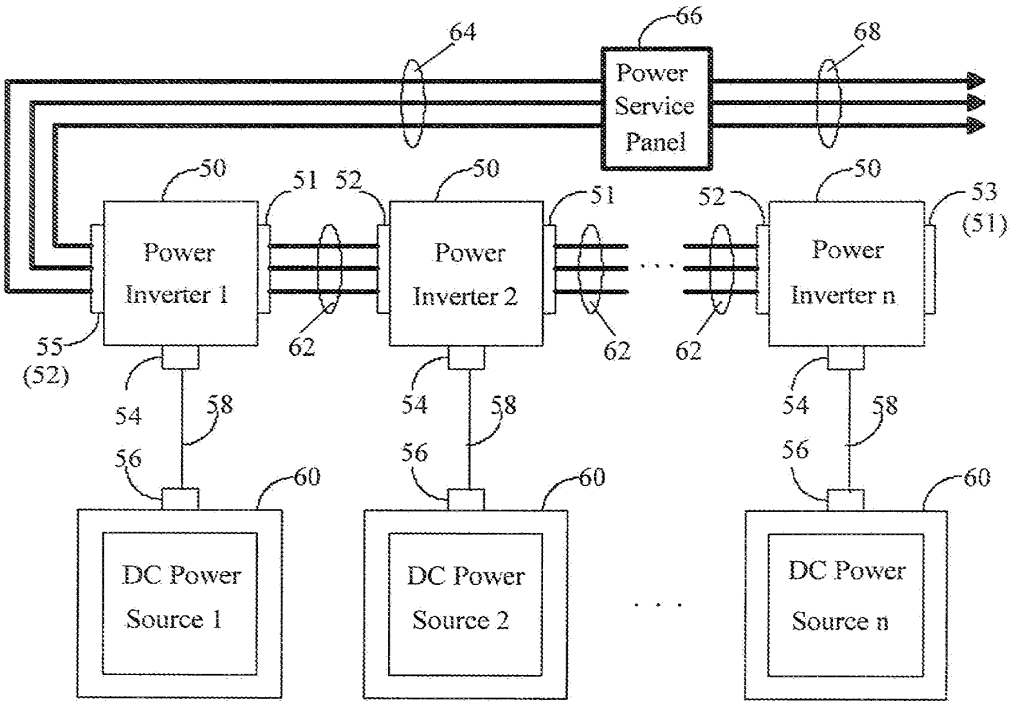
64
66
68
Power
Service
Panel
50
51
52
53
(51)
Power
Inverter 1
Power
Inverter 2
Power
Inverter n
55
(52)
62
54
58
56
60
DC Power
Source 1
DC Power
Source 2
DC Power
Source n

Fig. 3

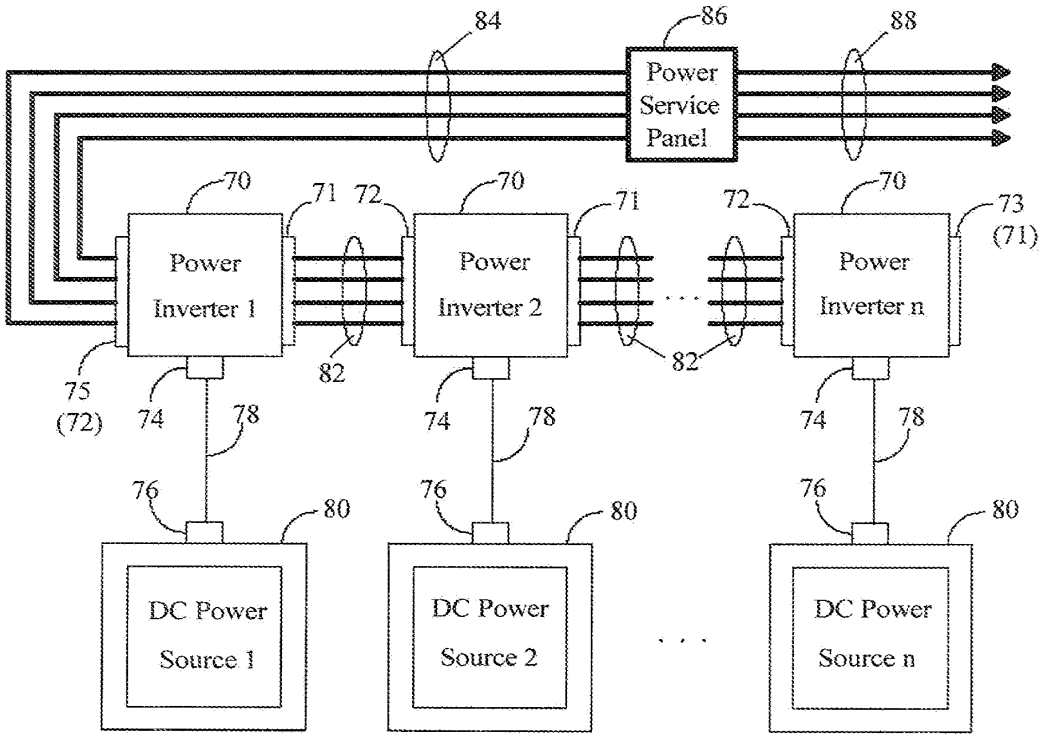
84
86
88
Power Service Panel
70
71
72
73
(71)
Power Inverter 1
Power Inverter 2
Power Inverter n
75
(72)
74
78
76
80
82
DC Power Source 1
DC Power Source 2
DC Power Source n

Fig. 4

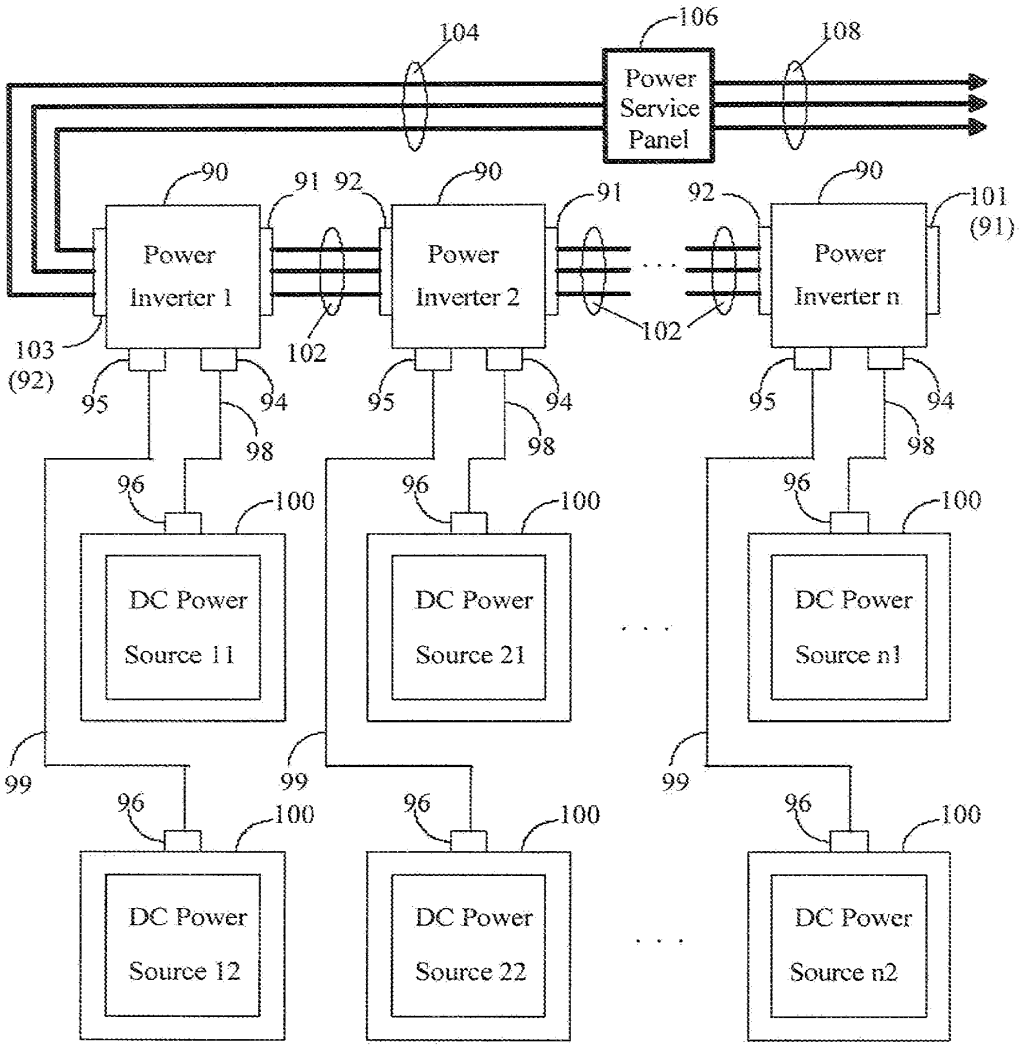
104
106
108
Power Service Panel
90
91
92
Power Inverter 1
Power Inverter 2
Power Inverter n
101 (91)
103 (92)
102
95
94
98
96
100
DC Power Source 11
DC Power Source 21
DC Power Source n1
99
DC Power Source 12
DC Power Source 22
DC Power Source n2

Fig. 5

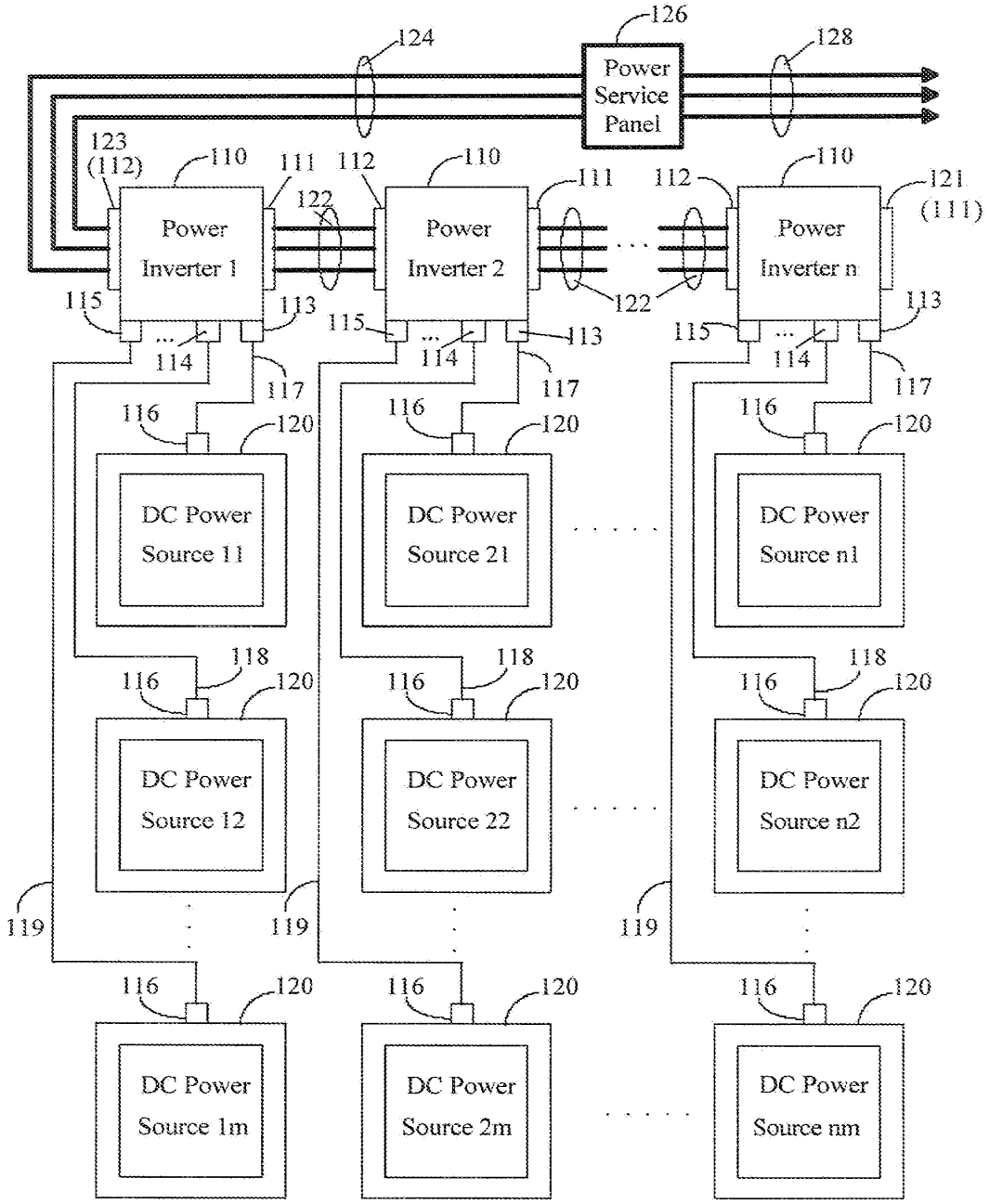
126
124
128
Power Service Panel
123 (112)
110
111
112
122
Power Inverter 1
Power Inverter 2
Power Inverter n
121 (111)
115
113
114
117
116
120
DC Power Source 11
DC Power Source 21
DC Power Source n1
118
DC Power Source 12
DC Power Source 22
DC Power Source n2
119
DC Power Source 1m
DC Power Source 2m
DC Power Source nm

Fig. 6

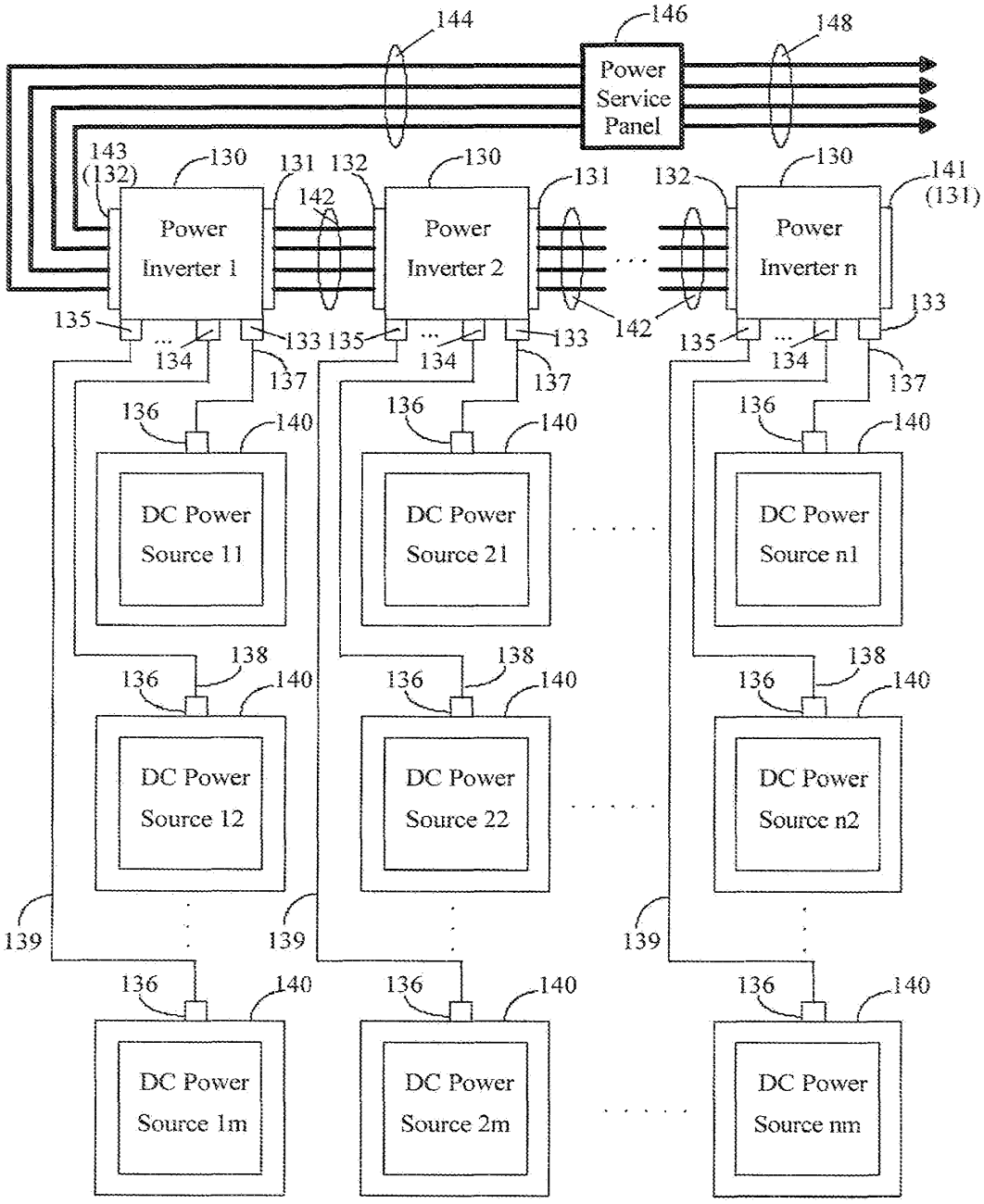
144
146
148
Power Service Panel
143 (132)
130
131
132
142
Power Inverter 1
Power Inverter 2
Power Inverter n
141 (131)
133
134
135
137
136
140
138
139
DC Power Source 11
DC Power Source 21
DC Power Source n1
DC Power Source 12
DC Power Source 22
DC Power Source n2
DC Power Source 1m
DC Power Source 2m
DC Power Source nm

Fig. 7

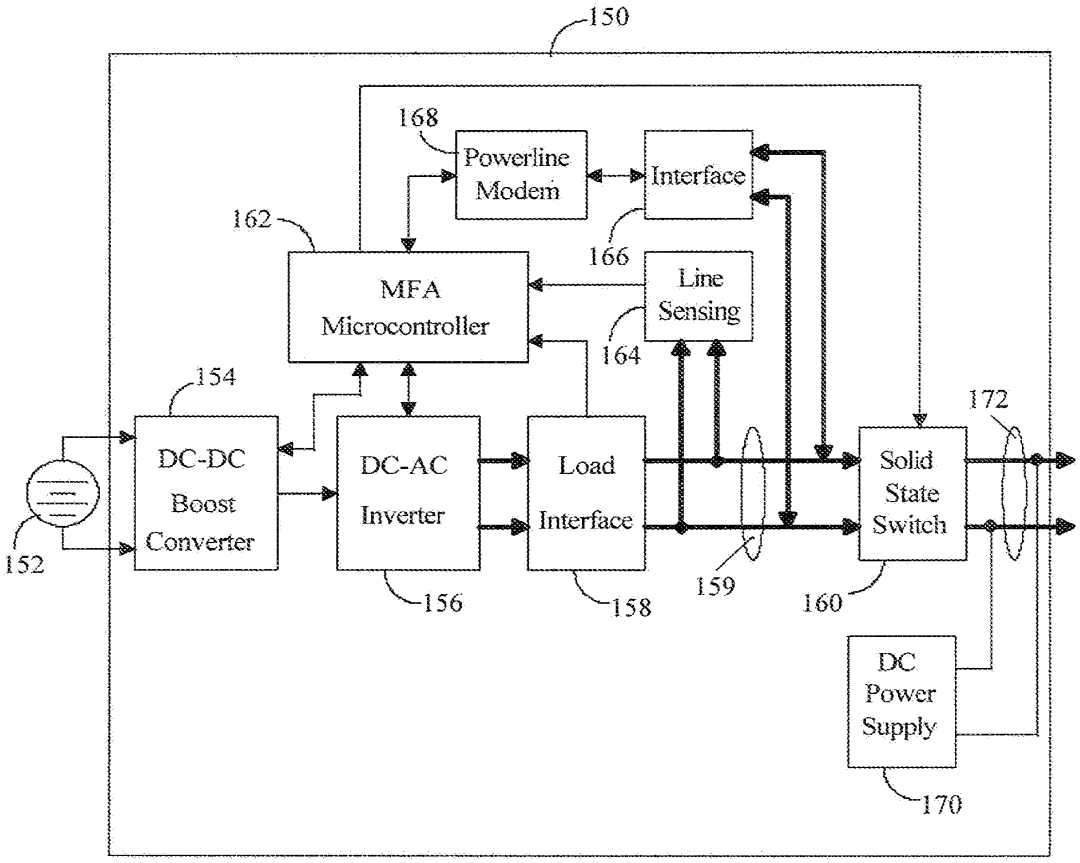
150
168
Powerline Modem
Interface
162
166
MFA Microcontroller
Line Sensing
164
154
172
DC-DC Boost Converter
DC-AC Inverter
Load Interface
Solid State Switch
152
156
158
159
160
DC Power Supply
170

Fig. 8

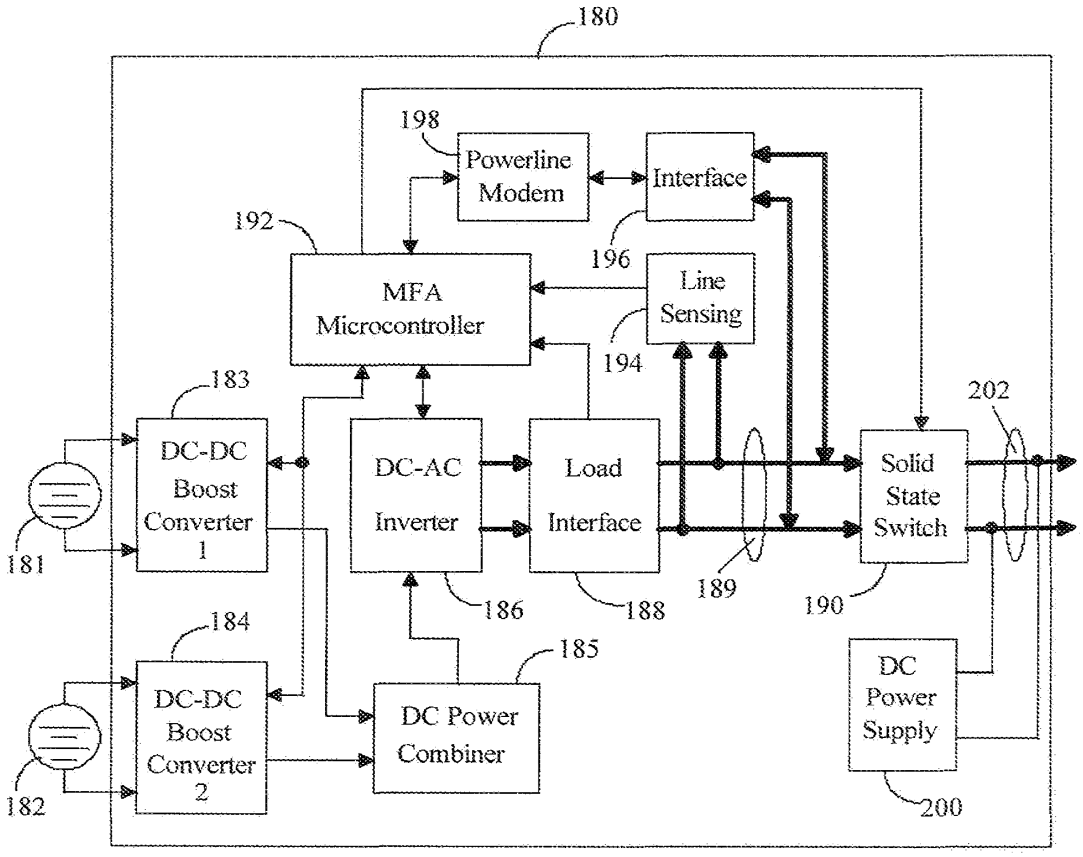
180
198
Powerline Modem
Interface
192
196
MFA Microcontroller
Line Sensing
194
183
202
DC-DC Boost Converter 1
DC-AC Inverter
Load Interface
Solid State Switch
181
186
188
189
190
184
185
DC-DC Boost Converter 2
DC Power Combiner
DC Power Supply
182
200

Fig. 9

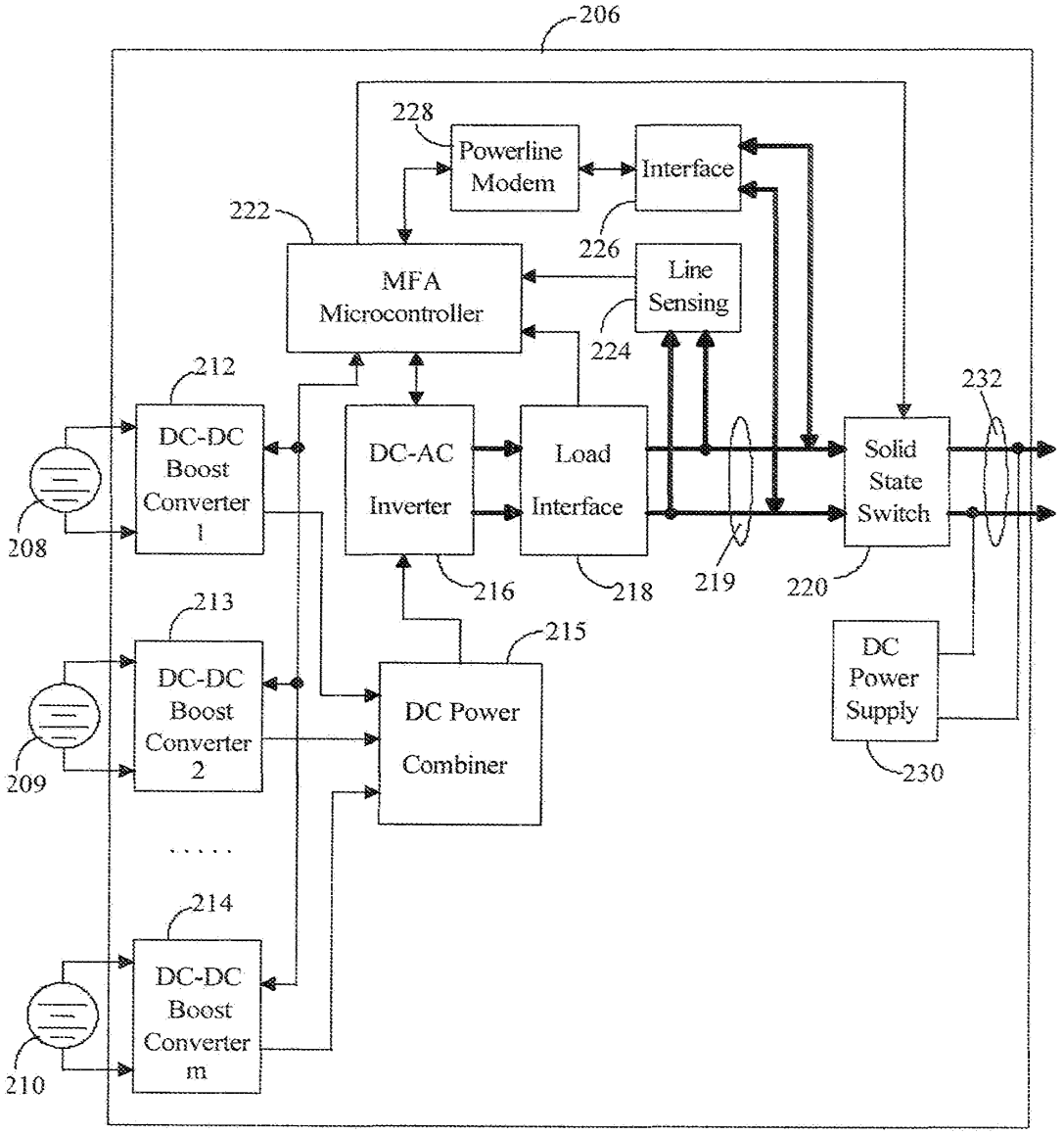
206
228
Powerline Modem
Interface
222
226
MFA Microcontroller
Line Sensing
224
212
232
DC-DC Boost Converter 1
DC-AC Inverter
Load Interface
Solid State Switch
208
216
218
219
220
213
215
DC Power Supply
DC-DC Boost Converter 2
DC Power Combiner
209
230
214
DC-DC Boost Converter m
210

Fig. 10

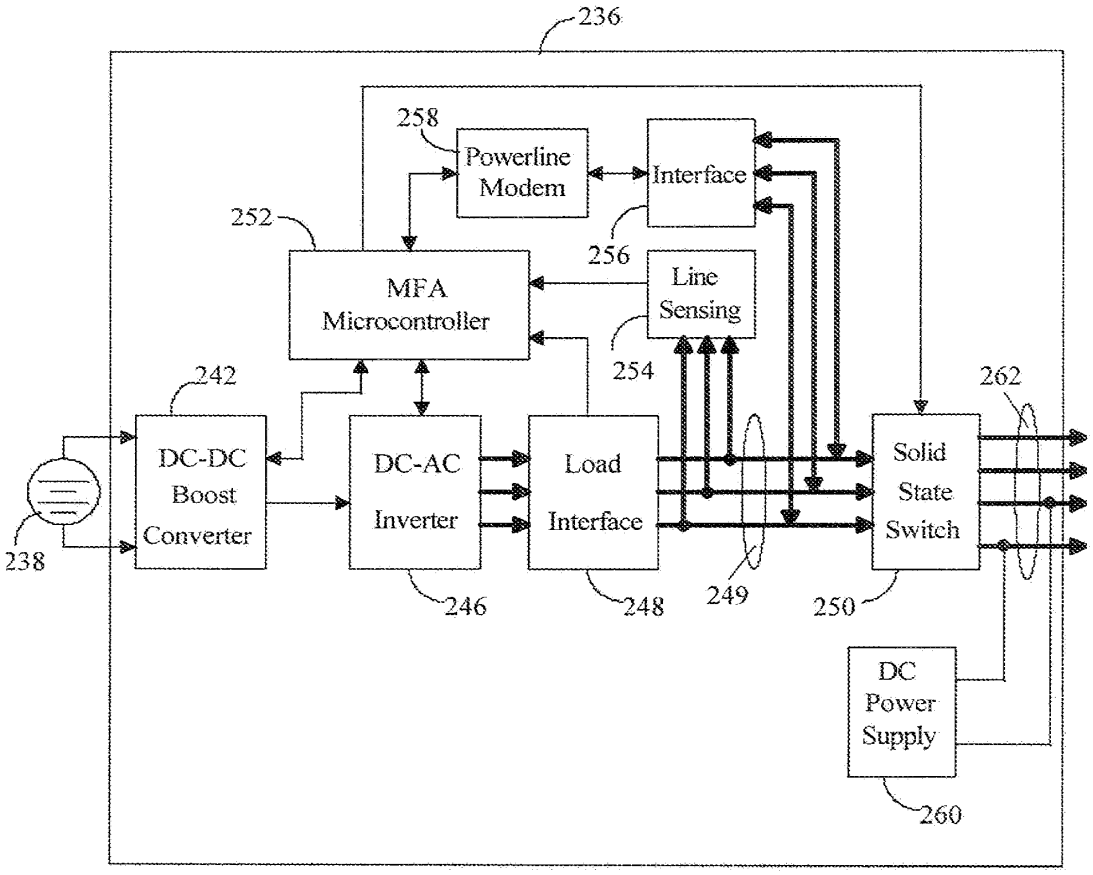
236
258
Powerline Modem
Interface
252
256
MFA Microcontroller
Line Sensing
254
242
262
DC-DC Boost Converter
DC-AC Inverter
Load Interface
Solid State Switch
238
246
248
249
250
DC Power Supply
260

Fig. 11

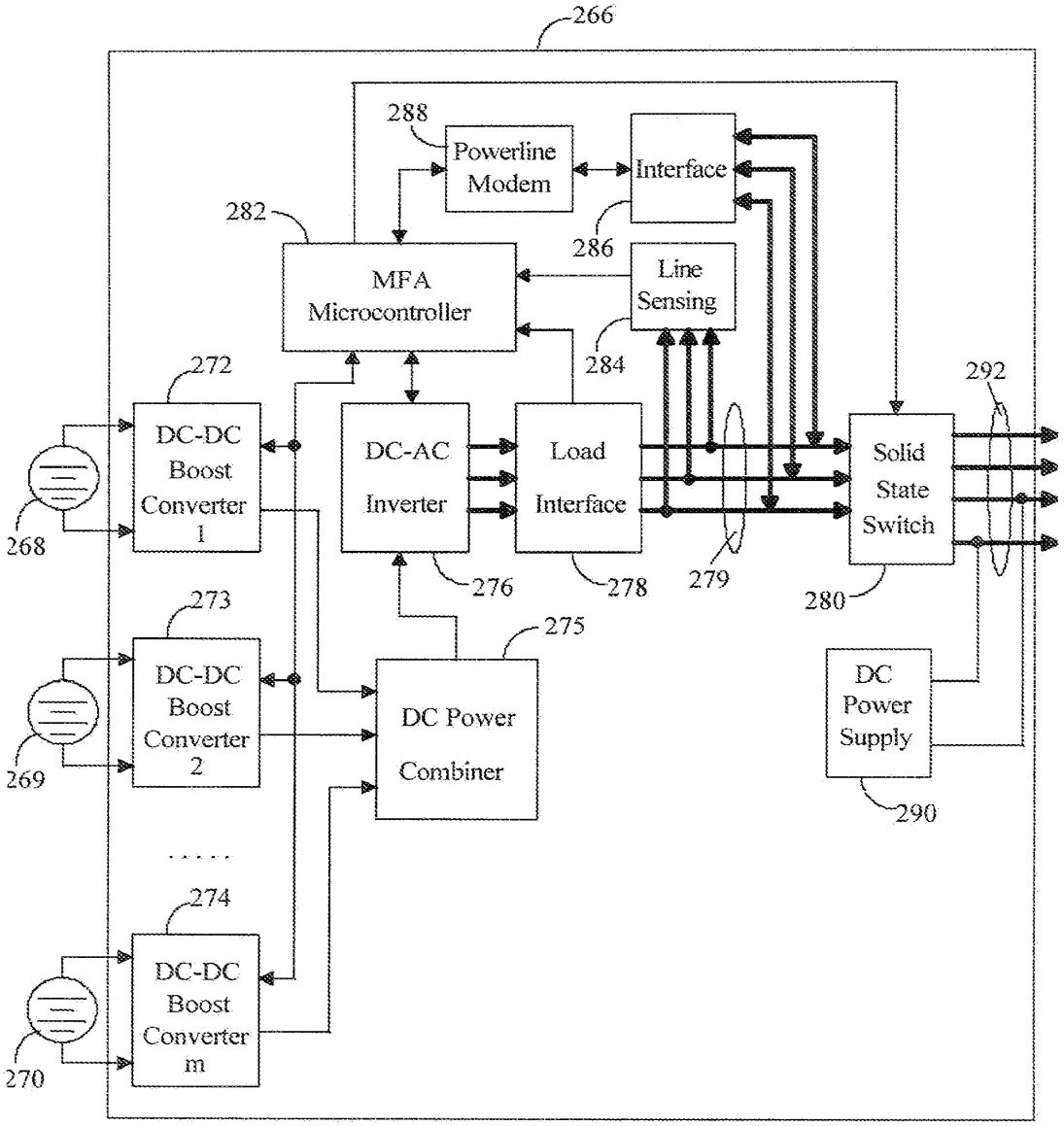
266
288
Powerline Modem
Interface
282
286
MFA Microcontroller
Line Sensing
284
272
292
DC-DC Boost Converter 1
DC-AC Inverter
Load Interface
Solid State Switch
268
276
278
279
280
273
275
DC-DC Boost Converter 2
DC Power Combiner
DC Power Supply
269
290
274
DC-DC Boost Converter m
270

Fig. 12

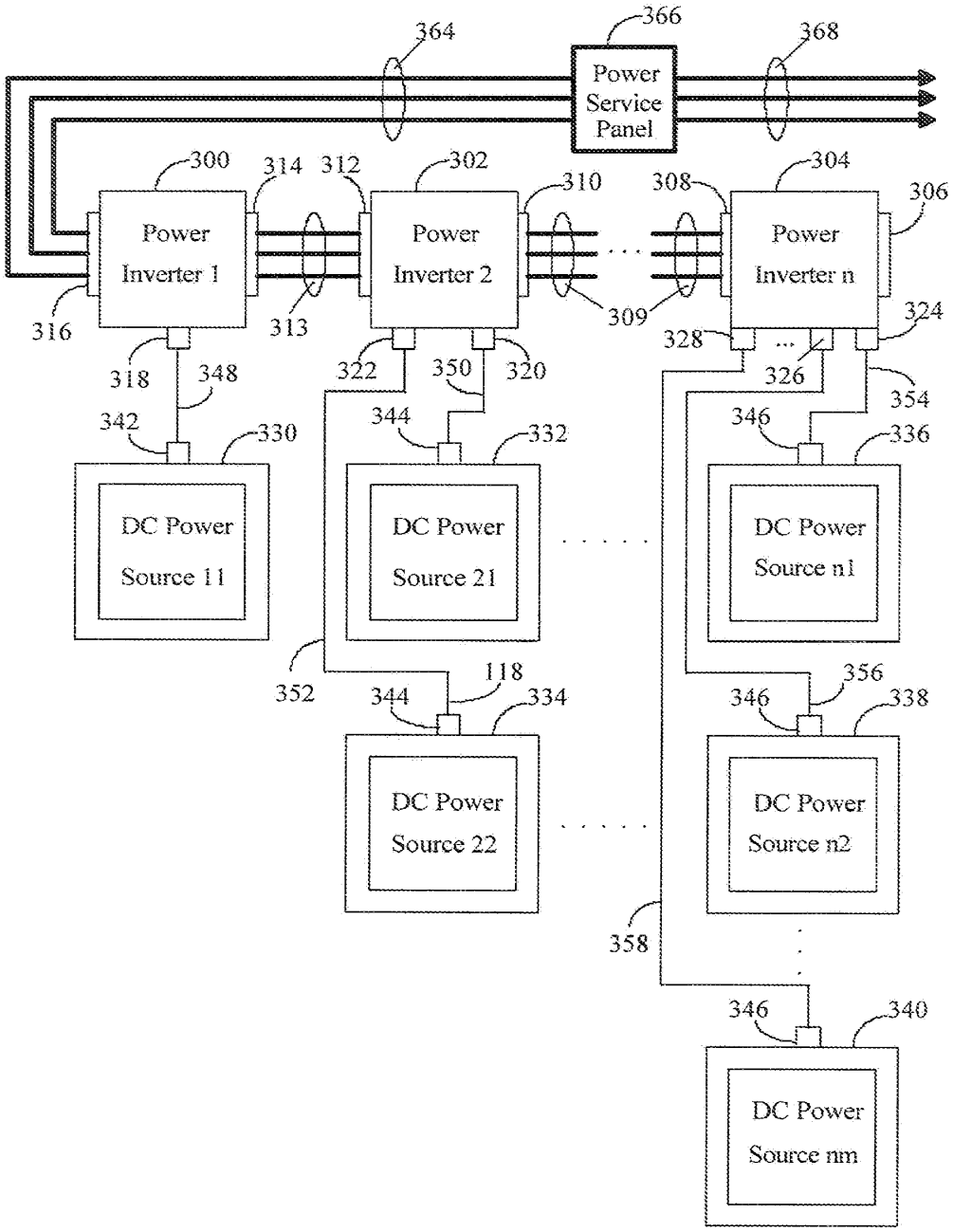
364
366
368
Power Service Panel
300
314
312
302
310
308
304
306
Power Inverter 1
Power Inverter 2
Power Inverter n
316
313
309
324
328
318
348
322
350
320
326
354
342
330
344
332
346
336
DC Power Source 11
DC Power Source 21
DC Power Source n1
352
118
344
334
346
356
338
DC Power Source 22
DC Power Source n2
358
346
340
DC Power Source nm

Fig. 13

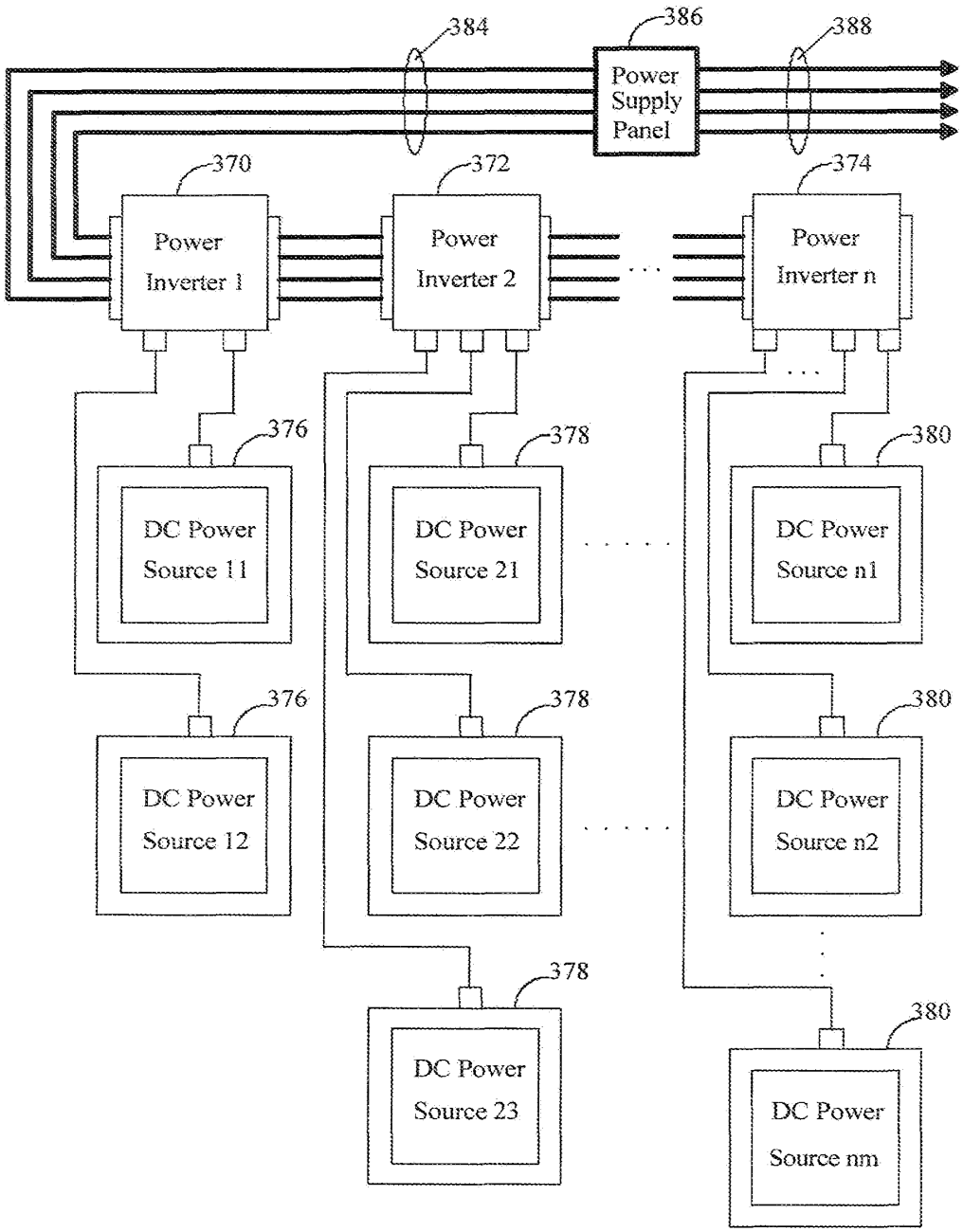
384
386
388
Power Supply Panel
370
372
374
Power Inverter 1
Power Inverter 2
Power Inverter n
376
378
380
DC Power Source 11
DC Power Source 21
DC Power Source n1
DC Power Source 12
DC Power Source 22
DC Power Source n2
DC Power Source 23
DC Power Source nm

Fig. 14

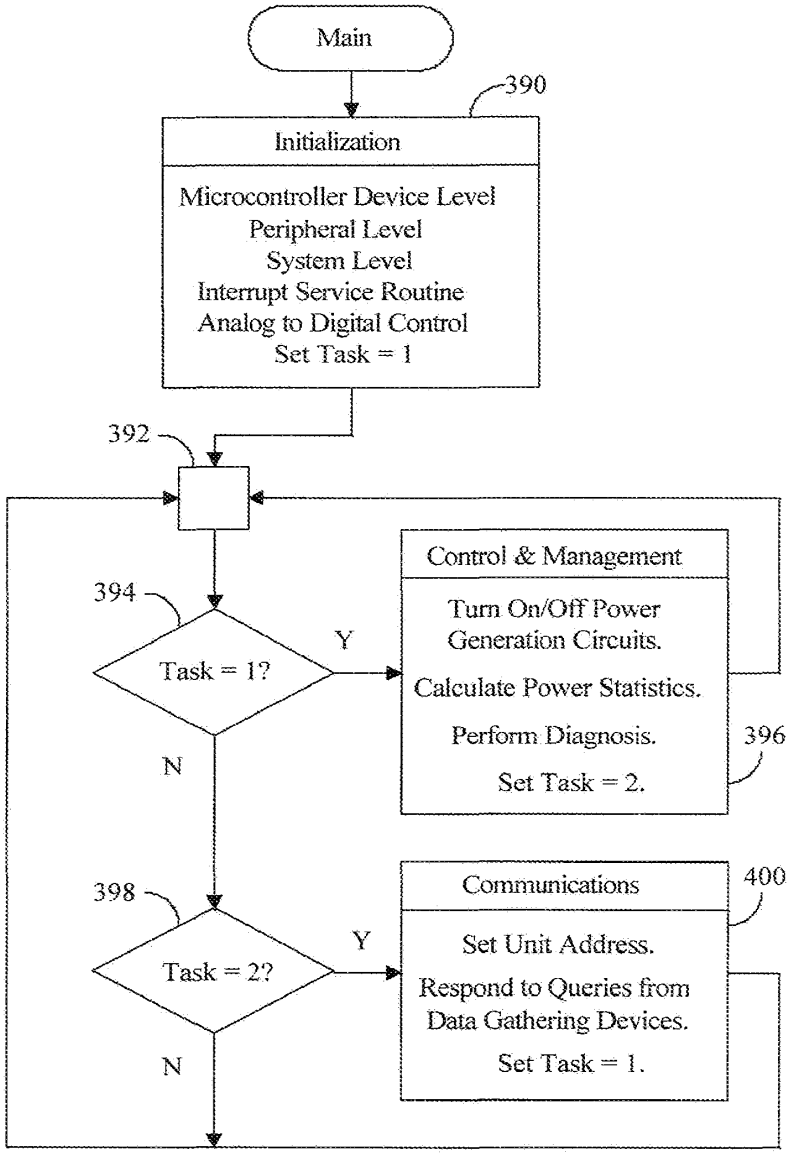
Main
390
Initialization
Microcontroller Device Level
Peripheral Level
System Level
Interrupt Service Routine
Analog to Digital Control
Set Task = 1
392
394
Task = 1?
Y
N
Control & Management
Turn On/Off Power Generation Circuits.
Calculate Power Statistics.
Perform Diagnosis.
Set Task = 2.
396
398
Task = 2?
Y
N
Communications
400
Set Unit Address.
Respond to Queries from Data Gathering Devices.
Set Task = 1.

Fig. 15

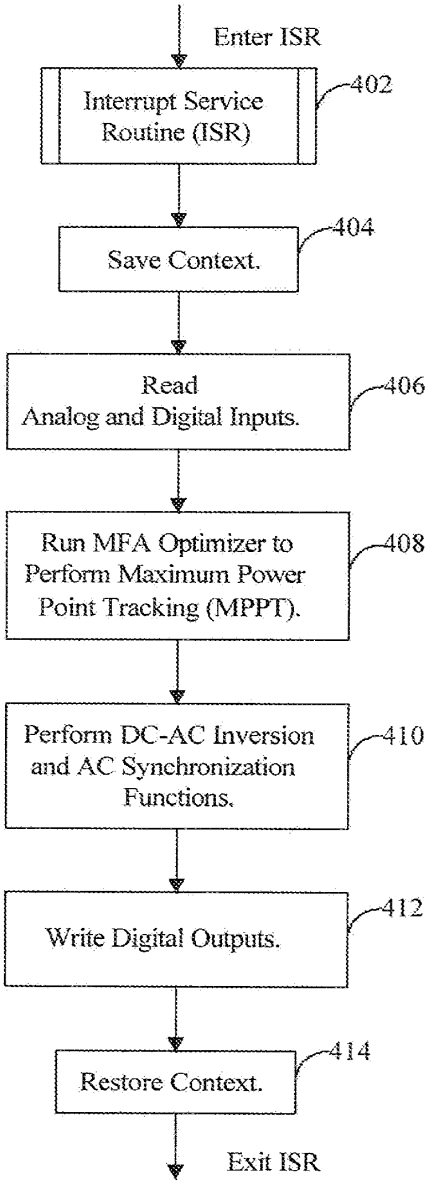
Enter ISR
Interrupt Service Routine (ISR)
402
Save Context.
404
Read Analog and Digital Inputs.
406
Run MFA Optimizer to Perform Maximum Power Point Tracking (MPPT).
408
Perform DC-AC Inversion and AC Synchronization Functions.
410
Write Digital Outputs.
412
Restore Context.
414
Exit ISR

Fig. 16

Electronic Acknowledgement Receipt

EFS ID:	8026234
Application Number:	12837162
International Application Number:	
Confirmation Number:	3679
Title of Invention:	SMART AND SCALABLE POWER INVERTERS
First Named Inventor/Applicant Name:	George Shu-Xing CHENG
Customer Number:	47604
Filer:	Dale S. Lazar/Jacqueline Kimvilakani
Filer Authorized By:	Dale S. Lazar
Attorney Docket Number:	350809-000003
Receipt Date:	15-JUL-2010
Filing Date:	
Time Stamp:	16:58:07
Application Type:	Utility under 35 USC 111(a)

Payment information:

Submitted with Payment	no

File Listing:

Document Number	Document Description	File Name	File Size(Bytes)/ Message Digest	Multi Part /.zip	Pages (if appl.)
1	Transmittal of New Application	350809000003USTRANSMITTAL.pdf	430102 2a11016c22003fa1991181651e84ca92de336159	no	1

Warnings:

Information:

2	Application Data Sheet	350809000003USDATASHEET.pdf	914962 354e470588d281c3b92b694e7fdff6445fe03dec	no	4
Warnings:					
Information:					
This is not an USPTO supplied ADS fillable form					
3		350809000003USAPPLICATION.pdf	10764241 fcbc9a5a5a3e4eb8c7e8a6986de76d6174886685	yes	29
	Multipart Description/PDF files in .zip description				
	Document Description		**Start**	**End**	
	Specification		1	17	
	Claims		18	28	
	Abstract		29	29	
Warnings:					
Information:					
4	Drawings-only black and white line drawings	350809000003USFIGURES.pdf	3559850 b74207349ec851269bfb1a05211d7ac723800826	no	15
Warnings:					
Information:					
		Total Files Size (in bytes):	15669155		

This Acknowledgement Receipt evidences receipt on the noted date by the USPTO of the indicated documents, characterized by the applicant, and including page counts, where applicable. It serves as evidence of receipt similar to a Post Card, as described in MPEP 503.

<u>New Applications Under 35 U.S.C. 111</u>
If a new application is being filed and the application includes the necessary components for a filing date (see 37 CFR 1.53(b)-(d) and MPEP 506), a Filing Receipt (37 CFR 1.54) will be issued in due course and the date shown on this Acknowledgement Receipt will establish the filing date of the application.

<u>National Stage of an International Application under 35 U.S.C. 371</u>
If a timely submission to enter the national stage of an international application is compliant with the conditions of 35 U.S.C. 371 and other applicable requirements a Form PCT/DO/EO/903 indicating acceptance of the application as a national stage submission under 35 U.S.C. 371 will be issued in addition to the Filing Receipt, in due course.

<u>New International Application Filed with the USPTO as a Receiving Office</u>
If a new international application is being filed and the international application includes the necessary components for an international filing date (see PCT Article 11 and MPEP 1810), a Notification of the International Application Number and of the International Filing Date (Form PCT/RO/105) will be issued in due course, subject to prescriptions concerning national security, and the date shown on this Acknowledgement Receipt will establish the international filing date of the application.

Smart and Scalable Power Inverters

This application claims priority to U.S. Provisional Application No. 61/226,141, filed on July 16, 2009, which is herein incorporated by reference.

The subject of this patent relates to direct current (DC) to alternating current (AC) power inverters that invert DC power from single or multiple DC power sources to single-phase or three-phase AC power, where the DC power source includes but is not limited to photovoltaic (PV) solar modules, fuel cells, batteries, and other DC power generators. More particularly, this patent relates to a method and apparatus that can intelligently invert DC power from single or multiple DC sources to single-phase or three-phase AC power to feed the power grid with both optimal efficiency and system scalability. The inventive smart and scalable power inverters include a novel and unique scalable design so that the DC to AC power inversion system can include as few as one inverter and one DC source, up to a selected number of inverters and multiple DC sources. A number of smart single-input, dual-input, triple-input, quad-input, and multiple-input power inverters in a mixed variety can easily connect to single, dual, triple, quad, and multiple DC power sources, invert the DC power to AC power, and daisy chain together to generate a total power, which is equal to the summation of the AC power supplied by each smart and scalable power inverter.

In the following, we will use a photovoltaic (PV) solar power system as an example to describe this invention. Traditionally, in a PV solar power system, the DC output from each solar module is combined in a DC junction box. The final DC output from the DC junction box is connected to a large centralized DC-AC power inverter to generate electricity. Using a centralized power inverter includes the following shortcomings:

1. If the inverter fails, the entire solar power generation system shuts down;

2. The centralized power inverter requires a large space to install, generates excessive heat and noise, and can be costly;

3. Since the performance of the entire solar power system is dictated by the performance of the weakest solar module, power production is negatively affected by non-

uniformity of solar modules, sunlight variations or partial shading due to clouds, trees, dust on the panel, etc.;

4. The Maximum Power Point Tracking (MPPT) can only be applied to a system level, not to each solar module;

5. A lot of design and installation effort must be made to assure the solar modules are properly oriented in respect to each other;

6. The DC power output from each solar module has to be wired to a DC power junction box causing the wiring to be costly and labor intensive; and

7. Expensive large gauge DC power cables have to be used to connect the junction box and the centralized power inverter to avoid excessive power loss.

The smart and scalable power inverters described in this patent overcome these shortcomings and provide great scalability and flexibility to easily and cost-effectively install a photovoltaic solar power system with optimal power generation efficiency.

In the accompanying drawing:

Figure 1 is a block diagram illustrating a smart single-input power inversion and optimization system where one power inverter inverts the DC power from one DC source to single-phase AC power.

Figure 2 is a block diagram illustrating a smart single-input three-phase power inversion and optimization system where one power inverter inverts the DC power from one DC source to three-phase AC power.

Figure 3 is a block diagram illustrating a smart single-input power inversion and optimization system where two or more smart power inverters daisy chain, each of which inverts the DC power from one DC source to single-phase AC power.

Figure 4 is a block diagram illustrating a smart single-input three-phase power inversion and optimization system where two or more smart power inverters daisy chain, each of which inverts the DC power from one DC source to three-phase AC power.

Figure 5 is a block diagram illustrating a smart dual-input power inversion and optimization system where two or more smart power inverters daisy chain, each of which inverts the DC power from two DC sources to single-phase AC power.

Figure 6 is a block diagram illustrating a smart multi-input power inversion and optimization system where two or more smart power inverters daisy chain, each of which inverts the DC power from multiple DC sources to single-phase AC power.

Figure 7 is a block diagram illustrating a smart multi-input three-phase power inversion and optimization system where two or more smart power inverters daisy chain, each of which inverts the DC power from multiple DC sources to three-phase AC power.

Figure 8 is a block diagram illustrating a smart single-input power inverter that inverts the DC power from one DC source to single-phase AC power.

Figure 9 is a block diagram illustrating a smart dual-input power inverter that inverts the DC power from two DC sources to single-phase AC power.

Figure 10 is a block diagram illustrating a smart multi-input power inverter that inverts the DC power from multiple DC sources to single-phase AC power.

Figure 11 is a block diagram illustrating a smart single-input three-phase power inverter that inverts the DC power from one DC source to three-phase AC power.

Figure 12 is a block diagram illustrating a smart multi-input three-phase power inverter that inverts the DC power from multiple DC sources to three-phase AC power.

Figure 13 is a block diagram illustrating a smart power inversion and optimization system where one smart single-input power inverter, one smart dual-input power inverter, and a number of multi-input power inverters in a mixed variety daisy chain to generate single-phase AC power.

Figure 14 is a block diagram illustrating a smart three-phase power inversion and optimization system where one smart dual-input power inverter, one smart triple-input power inverter, and a number of smart multi-input power inverters in a mixed variety daisy chain to generate three-phase AC power.

Figure 15 is a flow chart describing the main software program running in the MFA microcontroller.

Figure 16 is a flow chart describing the key components, functions, and steps in the interrupt service routine embedded in the MFA microcontroller.

The term "mechanism" is used herein to represent hardware, software, or any combination thereof.

Description

Figure 1 is a block diagram illustrating a smart single-input power inversion and optimization system where one power inverter inverts the DC power from one DC source to single-phase AC power. The system comprises one power inverter 10, one DC power source such as a solar module 20, an inverter's AC power output port 12, an inverter's DC power port 14, a DC source's DC power connector 16, a DC power cable 18, a single-phase AC powerline 24, a power service panel 26, and the power grid 28. This is the simplest case of the DC to AC power inversion and optimization system, where one DC to AC power inverter connects to a DC source on one end, inverts the DC power to single-phase AC power, and outputs the AC power to the power grid 28 via the AC powerline 24 and the power service panel 26. If the DC source is a photovoltaic (PV) solar module, this can be considered a personal solar power system that could be potentially installed by a knowledgeable homeowner, provided certain permits are obtained.

Figure 2 is a block diagram illustrating a smart single-input three-phase power inversion and optimization system where one power inverter inverts the DC power from one DC source to three-phase AC power. The system comprises one power inverter 30, one DC power source such as a solar module 40, an inverter's AC power output port 32, an inverter's DC power port 34, a DC power connector of the DC source 36, a DC power cable 38, a three-phase AC powerline 44, a three-phase power service panel 46, and the three-phase power grid 48. The DC to AC power inverter connects to a DC source on one end, inverts the DC power to three-phase AC power, and outputs the AC power to the power grid 48 via AC powerline 44 and power service panel 46.

Figure 3 is a block diagram illustrating a smart single-input power inversion and optimization system where two or more power inverters daisy chain, each of which inverts the DC power from one DC source to single-phase AC power. The system comprises n smart power inverters 50 and the same number of DC power sources 60. Each smart power inverter comprises an AC power input port 51, an AC power output port 52, and a DC power port 54. Each DC power source such as a solar module 60 comprises a DC

power connector 56 and is connected to its corresponding power inverter via a DC power cable 58, respectively. All the smart power inverters 50 daisy chain, where the first power inverter's AC input port 53 is left open, and the last power inverter's AC output port 55 is connected to a power service panel 66 via the single-phase AC powerline 64. The AC power generated by the system is supplied to the power grid 68.

Throughout this document, n=1, 2, 3, ... , as an integer. Based on the design of the smart and scalable power inverter, there could be a limit to the actual number of inverters that can daisy chain. This is because the total generated AC current cannot exceed the limit of the connected branch circuit breaker in the power service panel. For each power service panel, multiple branch circuits can be added based on the desired power generation requirements of the application.

Without losing generality, let us say n=16 as an example. That means, 16 smart power inverters can daisy chain, where the AC output port of a smart power inverter connects to the AC input port of the next smart power inverter, and so on. The first power inverter's AC input port is left open, and the last power inverter's AC output port is connected to an AC power service panel so that the generated AC power can be sent to the power grid. This method greatly simplifies the wiring job when installing a PV solar power system.

Although we say the power inverters daisy chain, where the output port of each power inverter is connected to the input port of the next power inverter, the actual connection of the inverters is pass-through. That means, the generated AC power from each power inverter is added in parallel onto the AC powerline. In this scheme, a defective or low-producing power inverter will not interfere with other power inverters that are able to generate usable AC power. A defective or low-producing power inverter will be switched off automatically by a solid-state switch mechanism in the inverter. Therefore, unless the AC powerline is broken, all the healthy power inverters on the AC powerline will continue to work.

Figure 4 is a block diagram illustrating a smart single-input three-phase power inversion and optimization system where two or more power inverters daisy chain, each of which inverts the DC power from one DC source to three-phase AC power. The system

comprises n smart power inverters 70 and the same number of DC power sources 80. Each smart power inverter comprises an AC power input port 71, an AC power output port 72, and a DC power port 74. Each DC source such as a solar module 80 comprises a DC power connector 76 and is connected to its corresponding power inverter via a DC power cable 78, respectively. All the smart power inverters 70 daisy chain, where the first power inverter's AC input port 73 is left open, and the last power inverter's AC output port 75 is connected to a three-phase power service panel 86 via the three-phase AC powerline 84. The AC power generated by the system is supplied to the three-phase power grid 88.

Figure 5 is a block diagram illustrating a smart dual-input power inversion and optimization system where two or more smart power inverters daisy chain, each of which inverts the DC power from two DC sources to single-phase AC power. The system comprises n smart dual-input power inverters 90 and two times more of the DC power sources 100, so the total number of DC power sources is 2xn (2 times n). Each DC power source such as a solar module 100 comprises a DC power connector 96. Each smart dual-input power inverter has two DC power ports 94 and 95 connecting to their corresponding DC sources via DC power cables 98 and 99, respectively. Each smart power inverter comprises an AC power input port 91 and an AC power output port 92. All the smart power inverters 90 daisy chain, where the first power inverter's AC input port 101 is left open, and the last power inverter's AC output port 103 is connected to a power service panel 106 via the single-phase AC powerline 104. The AC power generated by the system is supplied to the power grid 108.

Figure 6 is a block diagram illustrating a smart multi-input power inversion and optimization system where two or more power inverters daisy chain, each of which inverts the DC power from multiple DC sources to single-phase AC power. Without losing generality, the system comprises n smart multi-input power inverters 110, each of which has multiple DC power input ports 113, 114,..., 115. Each DC source 120 has a DC power connector 116. For each smart multi-input power inverter, m DC sources 120 are connected to their corresponding power inverter via DC power cables 117, 118, ..., 119, respectively. Each smart power inverter comprises an AC power input port 111 and an

AC power output port 112. All the smart power inverters 110 daisy chain, where the first power inverter's AC input port 121 is left open, and the last power inverter's AC output port 123 is connected to a power service panel 126 via the single-phase AC powerline 124. The AC power generated by the system is supplied to the power grid 128. With this scalable scheme, there are nxm (n times m) DC power sources such as PV solar modules 120 in the system, where n is the total number of power inverters, and m is the total number of DC sources connected to each power inverter.

Throughout this document, m=1, 2, 3, ... as an integer. The smart and scalable power inverter can be designed with single-input (m=1), dual-input (m=2), triple-input (m=3), quad-input (m=4), and so on. Practically, various smart power inverter products can be designed with a different number of inputs. They have to be practically useful, meet branch circuit limit requirements, and make economic sense depending on the applications. Since each smart multi-input power inverter can handle m DC power sources, it is much more cost effective than the one-on-one design where a power inverter is required for each DC source. In addition, n smart multi-input power inverters can daisy chain through their AC power ports so that the wiring job can be significantly reduced during the installation of the solar power system.

For multi-input power inverters, the actual number of inverters that can daisy chain is limited by the total power generated by all the DC sources connected in a sub-system for a specific branch circuit. In this configuration, there are a total nxm (n times m) DC sources. If a branch circuit can take the total power generated by 16 DC sources as an example, we can daisy chain 8 dual-input power inverters or 4 quad-input power inverters to meet this requirement. More branch circuits can always be added to a power service panel if there are a large number of DC sources in the system. In this case, the solar power system will include a number of sub-systems, each of which includes nxm DC sources, n smart and scalable power inverters, and one branch circuit.

Figure 7 is a block diagram illustrating a smart multi-input three-phase power inversion and optimization system where two or more smart power inverters daisy chain, each of which inverts the DC power from multiple DC sources to three-phase AC power. Without losing generality, the system comprises n smart multi-input power inverters 130,

each of which has m DC power input ports 133, 134,..., 135. Each DC power source 140 has a DC power connector 136. For each smart multi-input power inverter, m DC sources 140 are connected to their corresponding power inverter via DC power cables 137, 138, ..., 139, respectively. Each smart power inverter comprises an AC power input port 131 and an AC power output port 132. The n smart power inverters 130 daisy chain, where the first power inverter's AC input port 141 is left open, and the last power inverter's AC output port 143 is connected to a power service panel 146 via the three-phase AC powerline 144. The AC power generated by the system is supplied to the three-phase power grid 148.

Figure 8 is a block diagram illustrating a smart single-input power inverter that inverts the DC power from one DC source to single-phase AC power. The smart single-input power inverter 150 comprises a DC-DC boost converter 154, a DC-AC inverter 156, a load interface circuit 158, a solid-state switch circuit 160, an MFA microcontroller 162, a line sensing circuit 164, an interface circuit for powerline communications 166, a powerline communications Modem 168, and a DC power supply 170.

The MFA microcontroller 162 as well as the ones to be described in Figures 9, 10, 11, and 12 are small computers on a single integrated circuit (IC) or a set of ICs that consists of a central processing unit (CPU) combined with functions and peripherals including a crystal oscillator, timers, watchdog, serial and analog I/Os, memory modules, pulse-width-modulation (PWM) generators, and user software programs. A 32-bit high-performance floating-point microcontroller is selected for this application. The MFA microcontroller performs real-time control and optimization functions for the smart and scalable power inverter, in which Model-Free Adaptive (MFA) controllers are used to control the DC-DC boost converter, and MFA optimizers provide maximum power point tracking (MPPT) to allow the power inverter to achieve optimal power production. The MFA control and optimization technologies have been described in U.S. patents 6,055,524, 6,556,980, 6,360,131, 6,684,115, 6,684,112, 7,016,743, 7,142,626, 7,152,052, 7,415,446, related international patents, and other pending patents.

In Figure 8, the power from a DC source 152 is delivered to a DC-DC boost converter 154. As an example, a standard 24V PV solar module will produce a usable DC

power in the range of 24V to 40V DC up to 8A. In order to produce commercial 240V AC power, the incoming DC voltage needs to be boosted to a minimal usable value such as 170V DC. Inductors, capacitors, diodes, switches, and controlled PWM (pulse width modulation) signals are used to perform the DC voltage boost. The DC power is then inverted to AC power with voltage larger than 240VAC by the DC-AC inverter 156. The generated AC power goes through the load interface circuit 158 to be combined with the AC power in the internal AC powerline 159. The high frequency components of the generated AC power are being filtered by the load interface circuit 158. A solid-state switch 160 controlled by the MFA microcontroller 162 is used to isolate the internal AC powerline 159 from the external AC powerline 172 when solar power is not being generated. This way, consumption of AC power from the power grid by the solar power unit will be minimized during the non-generation time. A line sensing circuit 164 connected to the AC powerline 159 is used to detect the phase and zero-crossing point of the incoming AC power from the power grid. The phase and zero-crossing point signals are sent to the MFA microcontroller 162 for AC power synchronization to assure that the power inverter provides high quality synchronized power to the grid. A powerline communications Modem 168, which is isolated by an interface circuit 166, is used to establish a 2-way digital signal communication between the MFA microcontroller 162 and the outside world through the AC powerline. This way, no extra digital signal lines are needed since the digital signals are embedded inside the AC power signal. The external AC powerline 172 is tapped by a power supply 170 to supply DC power to the electronic components of the power inverter.

The MFA microcontroller 162 is used to perform a number of tasks including (i) monitoring the DC boost voltage, (ii) controlling the DC-DC boost converter, (iii) performing maximum power point tracking (MPPT), (iv) performing DC-AC inversion and AC power synchronization, (v) monitoring AC current and voltage for generated power amount and status, (vi) performing powerline communications, (vii) performing logic controls such as AC powerline switching and isolation.

Figure 9 is a block diagram illustrating a smart dual-input power inverter that inverts the DC power from two DC sources to single-phase AC power. The smart dual-

input power inverter 180 comprises 2 DC-DC boost converters 183, 184, a DC power combiner 185, a DC-AC inverter 186, a load interface circuit 188, a solid-state switch circuit 190, an MFA microcontroller 192, a line sensing circuit 194, an interface circuit for powerline communications 196, a powerline communications Modem 198, and a DC power supply 200. The power from DC sources 181, 182 is delivered to the corresponding DC-DC boost converters 183, 184, respectively. The DC power is then combined in the DC power combiner 185. The total combined DC power is inverted to AC power with voltage larger than 240VAC by the DC-AC inverter 186. The generated AC power goes through the load interface circuit 188 to be combined with the AC power in the internal AC powerline 189. A solid-state switch 190 controlled by the MFA microcontroller 192 is used to isolate the internal AC powerline 189 from the external AC powerline 202 when solar power is not being generated. A line sensing circuit 194 connected to the AC powerline 189 is used to detect the phase and zero-crossing point of the incoming AC power from the power grid. The phase and zero-crossing point signals are sent to the MFA microcontroller 192 for AC power synchronization to assure that the power inverter provides high quality synchronized power to the grid. A powerline communications Modem 198, which is isolated by an interface circuit 196, is used to establish a 2-way digital signal communication between the MFA microcontroller 192 and the outside world through the AC powerline. The external AC powerline 202 is tapped by a power supply 200 to supply DC power to the electronic components of the power inverter. The MFA microcontroller 192 is used to perform a number of tasks including (i) monitoring the DC boost voltage from each DC-DC boost converter, (ii) controlling the DC-DC boost converters, (iii) performing maximum power point tracking (MPPT) for each DC source, (iv) performing DC-AC inversion and AC power synchronization, (v) monitoring AC current and voltage for generated power amount and status, (vi) performing powerline communications, (vii) performing logic controls such as AC powerline switching and isolation.

Figure 10 is a block diagram illustrating a smart multi-input power inverter that inverts the DC power from multiple DC sources to single-phase AC power. The smart multi-input power inverter 206 comprises m DC-DC boost converters 212, 213,..., 214, a

DC power combiner 215, a DC-AC inverter 216, a load interface circuit 218, a solid-state switch circuit 220, an MFA microcontroller 222, a line sensing circuit 224, an interface circuit for powerline communications 226, a powerline communications Modem 228, and a DC power supply 230. The power from DC sources 208, 209,..., 210 is delivered to the corresponding DC-DC boost converters 212, 213,..., 214, respectively. The DC power is then combined in the DC power combiner 215. The total combined DC power is inverted to AC power with voltage larger than 240VAC by the DC-AC inverter 216. The generated AC power goes through the load interface circuit 218 to be combined with the AC power in the internal AC powerline 219. A solid-state switch 220 controlled by the MFA microcontroller 222 is used to isolate the internal AC powerline 219 from the external AC powerline 232 when solar power is not being generated. A line sensing circuit 224 connected to the AC powerline 219 is used to detect the phase and zero-crossing point of the incoming AC power from the power grid. The phase and zero-crossing point signals are sent to the MFA microcontroller 222 for AC power synchronization to assure that the power inverter provides high quality synchronized power to the grid. A powerline communications Modem 228, which is isolated by an interface circuit 226, is used to establish a 2-way digital signal communication between the MFA microcontroller 222 and the outside world through the AC powerline. The external AC powerline 232 is tapped by a power supply 230 to supply DC power to the electronic components of the power inverter. The MFA microcontroller 222 is used to perform a number of tasks including (i) monitoring the DC boost voltage from each DC-DC boost converter, (ii) controlling the DC-DC boost converters, (iii) performing maximum power point tracking (MPPT) for each DC source, (iv) performing DC-AC inversion and AC power synchronization, (v) monitoring AC current and voltage for generated power amount and status, (vi) performing powerline communications, (vii) performing logic controls such as AC powerline switching and isolation.

Figure 11 is a block diagram illustrating a smart single-input three-phase power inverter that inverts the DC power from one DC source to three-phase AC power. The smart three-phase single-input power inverter 236 comprises a DC-DC boost converter 242, a DC-AC inverter 246, a load interface circuit 248, a solid-state switch circuit 250,

an MFA microcontroller 252, a line sensing circuit 254, an interface circuit for powerline communications 256, a powerline communications Modem 258, and a DC power supply 260. The power from the DC source 238 is delivered to the DC-DC boost converter 242 and its voltage is increased to a certain value. The DC power is then inverted to three-phase AC power with voltage larger than 208VAC by the DC-AC inverter 246. The generated AC power goes through the load interface circuit 248 to be combined with the AC power in the internal three-phase AC powerline 249. A solid-state switch 250 controlled by the MFA microcontroller 252 is used to isolate the internal three-phase AC powerline 249 from external three-phase AC powerline 262 when solar power is not being generated. A line sensing circuit 254 connected to the AC powerline 249 is used to detect the phase and zero-crossing point of the incoming three-phase AC power from the power grid. The phase and zero-crossing point signals are sent to the MFA microcontroller 252 for AC power synchronization to assure that the power inverter provides high quality synchronized three-phase AC power to the grid. A powerline communications Modem 258, which is isolated by an interface circuit 256, is used to establish a 2-way digital signal communication between the MFA microcontroller 252 and the outside world through the AC powerline. The external three-phase AC powerline 262 is tapped by a power supply 260 to supply DC power to the electronic components of the power inverter. The MFA microcontroller 252 is used to perform a number of tasks including (i) monitoring the DC boost voltage from the DC-DC boost converter, (ii) controlling the DC-DC boost converter, (iii) performing maximum power point tracking (MPPT) for the DC source, (iv) performing DC-AC inversion and three-phase AC power synchronization, (v) monitoring the three-phase current and voltage for generated power amount and status, (vi) performing powerline communications, (vii) performing logic controls such as three-phase AC powerline switching and isolation.

Figure 12 is a block diagram illustrating a smart multi-input three-phase power inverter that inverts the DC power from multiple DC sources to three-phase AC power. The smart multi-input three-phase power inverter 266 comprises m DC-DC boost converters 272, 273,..., 274, a DC power combiner 275, a DC-AC inverter 276, a load interface circuit 278, a solid-state switch circuit 280, an MFA microcontroller 282, a line

sensing circuit 284, an interface circuit for powerline communications 286, a powerline communications Modem 288, and a DC power supply 290. The power from DC sources 268, 269,..., 270 is delivered to the corresponding DC-DC boost converters 272, 273,..., 274, respectively. The DC power is then combined in the DC power combiner 275. The total combined DC power is inverted to three-phase AC power with voltage larger than 208VAC by the DC-AC inverter 276. The generated AC power goes through the load interface circuit 278 to be combined with the AC power in the internal three-phase AC powerline 279. A solid-state switch 280 controlled by the MFA microcontroller 282 is used to isolate the internal three-phase AC powerline 279 from the external three-phase AC powerline 292 when solar power is not being generated. A line sensing circuit 284 connected to the AC powerline 279 is used to detect the phase and zero-crossing point of the incoming three-phase AC power from the power grid. The phase and zero-crossing point signals are sent to the MFA microcontroller 282 for AC power synchronization to assure that the power inverter provides high quality synchronized power to the grid. A powerline communications Modem 288, which is isolated by an interface circuit 286, is used to establish a 2-way digital signal communication between the MFA microcontroller 282 and the outside world through the AC powerline. The external three-phase AC powerline 292 is tapped by a power supply 290 to supply DC power to the electronic components of the power inverter. The MFA microcontroller 282 is used to perform a number of tasks including (i) monitoring the DC boost voltage from each DC-DC boost converter, (ii) controlling the DC-DC boost converters, (iii) performing maximum power point tracking (MPPT) for each DC source, (iv) performing DC-AC inversion and three-phase AC power synchronization, (v) monitoring the three-phase current and voltage for generated power amount and status, (vi) performing powerline communications, (vii) performing logic controls such as three-phase AC powerline switching and isolation.

The DC-DC boost converters that can be used in this embodiment are any of a number of well known converters described in the "Power Electronics Handbook" edited by Muhammad H. Rashid, published by Academic Press in 2007, including Buck Converter, Boost Converter, Buck-Boost Converter, Super-Lift Luo Converter, and Cascade Boost Converter. The DC-AC inverters that can be used in this embodiment are

any of a number of well known DC-AC inverters described in the same book including Half-Bridge Inverter, Full-Bridge Inverter, Bipolar PWM Inverter, Unipolar PWM Inverter, and Sinusoidal PWM Inverter. The DC combiners used in this embodiment can be designed with a circuit that allow the output from all DC-DC boost converters to connect in parallel so that all DC currents will be added together. The Powerline Modem that can be used in this embodiment can be any of a number of commercially available integrated circuits capable of providing 2-way digital communications through a powerline. Other modules discussed in this embodiment including load interface, solid state switch, line sensing circuit, powerline interface circuit, and DC power supply can be implemented using one or more known combinations of conventional electronic components such as resisters, capacitors, inductors, solid-state switches, transformers, diodes, transistors, operational amplifiers, and ceramic filters, etc.

Figure 13 is a block diagram illustrating a smart power inversion and optimization system, where one smart single-input power inverter, one smart dual-input power inverter, and a number of multi-input power inverters in a mixed variety daisy chain to generate single-phase AC power. The system comprises a smart single-input power inverter 300, a smart dual-input power inverter 302, and n-2 smart multi-input power inverters 304. The single-input power inverter 300 inverts DC from one DC source 330 to AC power; the dual-input power inverter 302 inverts DC from two DC sources 332 and 334 to AC power; and the multi-input power inverter 304 inverts DC from multiple DC sources 336, 338, and 340 to AC power. The single-input power inverter 300 connects to DC source 330 through its DC power port 318, DC source's DC connector 342, and a DC cable 348. The dual-input power inverter 302 connects to DC sources 332 and 334 through its DC power ports 320 and 322, DC sources' DC connectors 344, and DC cables 350 and 352, respectively. The multi-input power inverter 304 connects to DC sources 336, 338, and 340 through its DC power ports 324, 326, and 328, DC sources' DC connector 346, and DC cables 354, 356, and 358, respectively.

The smart single-input power inverter comprises an AC input port 314 and an AC output port 316; the smart dual-input power inverter comprises an AC input port 310 and an AC output port 312; and the smart multi-input power inverter comprises an AC input

port 306 and an AC output port 308. Without losing generality, within the system, there could be a number of smart power inverters having a mixed variety of inputs. All the smart and scalable power inverters daisy chain, where the first power inverter's AC input port 306 is left open, and the last power inverter's AC output port 316 is connected to a power service panel 366 via the single-phase AC powerline 364. The AC power generated by the system is supplied to the power grid 368.

Figure 14 is a block diagram illustrating a smart power inversion and optimization system where one smart dual-input power inverter, one smart triple-input power inverter, and a number of smart multi-input power inverters in a mixed variety daisy chain to generate three-phase AC power. The system comprises a smart dual-input power inverter 370, a smart triple-input power inverter 372, and n-2 smart multi-input power inverters 374. The dual-input power inverter 370 inverts DC from two DC sources 376 to AC power; the triple-input power inverter 372 inverts DC from three DC sources 378 to AC power; and the multi-input power inverter 374 inverts DC from multiple DC sources 380 to AC power. Without losing generality, within the system, there could be a number of smart power inverters having a mixed variety of inputs. All the smart and scalable power inverters daisy chain, where the first power inverter's AC input port is left open, and the last power inverter's AC output port is connected to a power service panel 386 via the three-phase AC powerline 384. The AC power generated by the system is supplied to the power grid 388.

Figure 15 is a flow chart describing the main software program running in the MFA microcontroller. At Block 390, initialization is taking place in the microcontroller device level, peripheral level, system level, and for the interrupt service routine and analog and digital control routines. More specifically, initialization will include but is not limited to setting up registers, I/Os, and timers and enabling interrupts for the interrupt service routine. At the end, it will set Task=1.

In the main program, there are two major tasks. Task 1 is related to the control and management of the smart and scalable power inverter. Task 2 is related to the communications of the power inverter to the outside world through the powerline

Modem. After initialization, the main program enters the main loop entry point 392 and then goes to Block 394.

At Block 394, the program checks to see if Task 1 is scheduled to run. If the answer is Yes, the program will execute the functions in Block 396 to (i) turn on/off the power generation circuit based on the DC power source input and conditions of the power inverter and AC powerline, (ii) calculate power statistics such as the amount of power generated during a certain period of time, and (iii) perform system diagnosis. Then, it sets Task=2 and returns to Block 392, which is the entry of the main loop. When the program continues, it will go through Block 394, and reach Block 398. At Block 398, the program checks to see if Task 2 is scheduled to run. If the answer is Yes, the program will execute the functions in Block 400 to (i) set the unit address for the power inverter, and (ii) respond to queries from data gathering or acquisition devices to report the power statistics. Then, it sets Task=1 and returns to Block 392. The main program runs continuously based on a preset loop rate to execute the scheduled tasks. At any time an interrupt is triggered, the microcontroller immediately processes the pending interrupt service routine.

Figure 16 is a flow chart describing the key components, functions, and steps in the interrupt service routine embedded in the MFA microcontroller. Block 402 is the entry of the interrupt service routine (ISR). An interrupt service routine is a software routine that the microcontroller invokes in response to an interrupt. All the time-critical functions the microcontroller needs to execute are put inside the ISR to assure these functions are executed in real time. At block 404, the ISR saves the current context of the main program. At Block 406, the ISR reads analog and digital inputs including but not limited to the voltage and current signals from the DC source, DC-DC boost converter, DC-AC inversion circuit, and phase and zero-crossing point of the AC Powerline. At Block 408, the ISR runs the MFA Optimizer to perform Maximum Power Point Tracking (MPPT) for each DC power source. At Block 410, the ISR performs DC-AC inversion and AC synchronization functions. At Block 412, the PWM control signals are sent out through the digital output ports to the corresponding DC-DC boost converter(s) and DC-AC inverter. At Block 414, the ISR restores the saved context of the main program so that the

execution of the main program can be resumed. After the ISR exits, the main program continues from the point where it was branched out to execute the interrupt service routine.

The systems described in all the figures of this patent, especially in Fig 1, 2, 13 and 14, demonstrate the essence of the scalability of this invention. One can build a small-scale or a very large-scale PV solar power system with various numbers and sizes of the smart and scalable power inverters of this invention. Regardless of the number and types of DC sources that each power inverter can handle, the smart power inverters in the same family can daisy chain producing a total AC power that is the summation of the AC power supplied by each smart power inverter. This "anything goes" design significantly improves the scalability, flexibility, user-friendliness, and return-on-investment (ROI) of renewable energy power generation systems including photovoltaic solar power systems. In addition, an existing system can be easily expanded by installing more solar modules and smart power inverters. This makes the solar power systems attractive to both homeowners and businesses where only limited budgets are available and continued investments can be made to expand the system over time. The disclosed invention could have strategic importance to the renewable energy industry and society.

Claims

1. A system for providing AC power to a power grid from a plurality of individual DC power sources each having a DC power output port, comprising:

a) a plurality of power inverters, each of said power inverters having one DC power input port, an AC power input port, and an AC power output port, said DC power input port having one DC power source connected thereto;

b) said AC power output port of each inverter being connected in a daisy chain to the AC power input port of the next inverter, except for the AC power input port of the first inverter being left open, and the AC power output port of the last inverter being connected to a power service panel of the power grid;

c) each of said power inverters including:

i) a DC-DC boost converter connected to said DC power source and arranged to convert the power source voltage to a higher DC voltage suitable for inversion;

ii) a DC-AC inverter connected to said DC-DC boost converter and arranged to invert the DC power to AC power with voltage higher than the incoming AC power voltage;

iii) an internal AC powerline that combines the generated AC power with the external AC power from the power grid;

iv) a load interface circuit connected to said DC-AC inverter and to said internal AC powerline, said load interface circuit being arranged to filter high-frequency components out of the said DC-AC inverter's AC output;

v) an MFA microcontroller connected to said DC-DC boost converter, DC-AC inverter, and load interface circuit, said microcontroller arranged to monitor the DC boost voltage, control the DC-DC boost converter, perform maximum power point tracking (MPPT), perform DC-AC inversion and AC power synchronization, monitor AC current and voltage for generated power amount and status, perform powerline communications, and perform logic controls such as AC powerline switching and isolation;

vi) a powerline modem connected to said microcontroller and said internal AC powerline through an interface circuitry for transmitting and receiving performance data between said microcontroller and said power grid;

vii) a line sensing circuit connected to said internal AC powerline and said microcontroller for detecting the phase and zero-crossing point of the incoming AC power from the power grid; and

viii) a solid state switch connected to said internal AC powerline and external AC powerline, and arranged to disconnect said internal AC powerline from the AC grid during the non-generation time.

2. The system of Claim 1, in which the output of each of said power inverters is single-phase AC.

3. The system of Claim 1, in which the output of each of said power inverters is three-phase AC.

4. The system of Claim 1, in which said MFA microcontroller includes Model-Free Adaptive (MFA) controllers which control the DC-DC boost converter, and MFA optimizers which provide maximum power point tracking (MPPT) to allow the power inverter to achieve optimal power production.

5. A system for providing AC power to a power grid from a plurality of individual DC power sources each having a DC power output port, comprising:

a) a plurality of power inverters, each of said power inverters having two DC power input ports, an AC power input port, and an AC power output port, each of said DC power input ports having one DC power source connected thereto;

b) said AC power output port of each inverter being connected in a daisy chain to the AC power input port of the next inverter, except for the AC power input port of the first inverter being left open, and the AC power output port of the last inverter being connected to a power service panel of the power grid;

c) each of said power inverters including:

i) a pair of DC-DC boost converters, one connected to each of said DC power sources, respectively, and arranged to convert the power source voltage to a higher DC voltage suitable for inversion;

ii) a DC power combiner connected to said DC-DC boost converters for combining the DC output from both DC-DC boost converters and allowing said DC-DC boost converters to connect in parallel so that all DC currents are added together;

iii) a DC-AC inverter connected to said DC power combiner and arranged to invert the DC power to AC power with voltage higher than the incoming AC power voltage;

iv) an internal AC powerline that combines the generated AC power with the external AC power from the power grid;

v) a load interface circuit connected to said DC-AC inverter and to said internal AC powerline, said load interface circuit being arranged to filter high-frequency components out of the said DC-AC inverter's AC output;

vi) an MFA microcontroller connected to said DC-DC boost converters, DC-AC inverter, and load interface circuit, said microcontroller arranged to monitor the DC boost voltage, control the DC-DC boost converter, perform maximum power point tracking (MPPT), perform DC-AC inversion and AC power synchronization, monitor AC current and voltage for generated power amount and status, perform powerline communications, and perform logic controls such as AC powerline switching and isolation;

vii) a powerline modem connected to said microcontroller and said internal AC powerline through an interface circuitry for transmitting and receiving performance data between said microcontroller and said power grid;

viii) a line sensing circuit connected to said internal AC powerline and said microcontroller for detecting the phase and zero-crossing point of the incoming AC power from the power grid; and

ix) a solid state switch connected to said internal AC powerline and external AC powerline, and arranged to disconnect said internal AC powerline from the AC grid during the non-generation time.

6. The system of Claim 5, in which the output of each of said power inverters is single-phase AC.

7. The system of Claim 5, in which the output of each of said power inverters is three-phase AC.

8. The system of Claim 5, in which said MFA microcontroller includes Model-Free Adaptive (MFA) controllers which control the DC-DC boost converters, and MFA optimizers which provide maximum power point tracking (MPPT) to allow the power inverter to achieve optimal power production.

9. A system for providing AC power to a power grid from a plurality of individual DC power sources each having a DC power output port, comprising:

a) a plurality of power inverters, each of said power inverters having m DC power input ports, where m is an integer greater than or equal to one, an AC power input port, and an AC power output port, each of said DC power input ports having one DC power source connected thereto;

b) said AC power output port of each inverter being connected in a daisy chain to the AC power input port of the next inverter, except for the AC power input port of the first inverter being left open, and the AC power output port of the last inverter being connected to a power service panel of the power grid;

c) each of said power inverters including:

i) m number of DC-DC boost converters, one connected to each of said DC power sources, respectively, and arranged to convert the power source voltage to a higher DC voltage suitable for inversion;

ii) a DC power combiner connected to said m number of DC-DC boost converters for combining the DC output from all DC-DC boost converters and allowing said DC-DC boost converters to connect in parallel so that all DC currents are added together;

iii) a DC-AC inverter connected to said DC power combiner and arranged to invert the DC power to AC power with voltage higher than the incoming AC power voltage;

iv) an internal AC powerline that combines the generated AC power with the external AC power from the power grid;

v) a load interface circuit connected to said DC-AC inverter and to said internal AC powerline, said load interface circuit being arranged to filter high-frequency components out of the said DC-AC inverter's AC output;

vi) an MFA microcontroller connected to said DC-DC boost converters, DC-AC inverter, and load interface circuit, said microcontroller arranged to monitor the DC boost voltage, control the DC-DC boost converter, perform maximum power point tracking (MPPT), perform DC-AC inversion and AC power synchronization, monitor AC current and voltage for generated power amount and status, perform powerline communications, and perform logic controls such as AC powerline switching and isolation;

vii) a powerline modem connected to said microcontroller and said internal AC powerline through an interface circuitry for transmitting and receiving performance data between said microcontroller and said power grid;

viii) a line sensing circuit connected to said internal AC powerline and said microcontroller for detecting the phase and zero-crossing point of the incoming AC power from the power grid; and

ix) a solid state switch connected to said internal AC powerline and external AC powerline, and arranged to disconnect said internal AC powerline from the AC grid during the non-generation time.

10. The system of Claim 9, in which the output of each of said power inverters is single-phase AC.

11. The system of Claim 9, in which the output of each of said power inverters is three-phase AC.

12. The system of Claim 9, in which said MFA microcontroller includes Model-Free Adaptive (MFA) controllers which control the DC-DC boost converters, and MFA optimizers which provide maximum power point tracking (MPPT) to allow the power inverter to achieve optimal power production.

13. A DC- to-AC power inverter, comprising:

a) one DC power input port having one DC power source connected thereto;

b) one AC power output port arranged to supply AC power to the AC power grid;

c) a DC-DC boost converter connected to said DC power source and arranged to convert the power source voltage to a higher DC voltage suitable for inversion;

d) a DC-AC inverter connected to said DC-DC boost converter and arranged to invert the DC power to AC power with voltage higher than the incoming AC power voltage;

e) an internal AC powerline that combines the generated AC power with the external AC power from the AC power grid;

f) a load interface circuit connected to said DC-AC inverter and to said internal AC powerline, said load interface circuit being arranged to filter high-frequency components out of the said DC-AC inverter's AC output;

g) an MFA microcontroller connected to said DC-DC boost converter, DC-AC inverter, and load interface circuit, said microcontroller arranged to monitor the DC boost voltage, control the DC-DC boost converter, perform maximum power point tracking (MPPT), perform DC-AC inversion and AC power synchronization, monitor AC current and voltage for generated power amount and status, perform powerline communications, and perform logic controls such as AC powerline switching and isolation;

h) a powerline modem connected to said microcontroller and said internal AC powerline through an interface circuitry for transmitting and receiving performance data between said microcontroller and said power grid;

i) a line sensing circuit connected to said internal AC powerline and said microcontroller for detecting the phase and zero-crossing point of the incoming AC power from the power grid; and

j) a solid state switch connected to said internal AC powerline and external AC powerline, and arranged to disconnect said internal AC powerline from the AC grid during the non-generation time.

14. The inverter of Claim 13, in which the output of said inverter is single-phase AC.

15. The inverter of Claim 13, in which the output of said inverter is three-phase AC.

16. The inverter of Claim 13, in which said MFA microcontroller includes Model-Free Adaptive (MFA) controllers which control the DC-DC boost converter, and MFA optimizers which provide maximum power point tracking (MPPT) to allow the power inverter to achieve optimal power production.

17. A DC- to-AC power inverter, comprising:

a) at least two DC power input ports, each of said DC power input ports having one DC power source connected thereto;

b) one AC power output port arranged to supply AC power to the AC power grid;

c) for each DC power source, a DC-DC boost converter connected to said DC power sources and arranged to convert the power source voltage to a higher DC voltage suitable for inversion;

d) a DC power combiner connected to said DC-DC boost converters for combining the DC output from all DC-DC boost converters and allowing the said DC-DC boost converters to connect in parallel so that all DC currents are added together;

e) a DC-AC inverter connected to said DC power combiner and arranged to invert the DC power to AC power with voltage higher than the incoming AC power voltage;

f) an internal AC powerline that combines the generated AC power with the external AC power from the power grid;

g) a load interface circuit connected to said DC-AC inverter and to said internal AC powerline, said load interface circuit being arranged to filter high-frequency components out of the said DC-AC inverter's AC output;

h) an MFA microcontroller connected to said DC-DC boost converters, DC-AC inverter, and load interface circuit, said microcontroller arranged to monitor the DC boost voltage, control the DC-DC boost converter, perform maximum power point tracking (MPPT), perform DC-AC inversion and AC power synchronization, monitor AC current and voltage for generated power amount and status, perform powerline communications, and perform logic controls such as AC powerline switching and isolation;

i) a powerline modem connected to said microcontroller and said internal AC powerline through an interface circuitry for transmitting and receiving performance data between said microcontroller and said power grid;

j) a line sensing circuit connected to said internal AC powerline and said microcontroller for detecting the phase and zero-crossing point of the incoming AC power from the power grid; and

k) a solid state switch connected to said internal AC powerline and external AC powerline, and arranged to disconnect said internal AC powerline from the AC grid during the non-generation time.

18. The inverter of Claim 17, in which the output of said inverter is single-phase AC.

19. The inverter of Claim 17, in which the output of said inverter is three-phase AC.

20. The inverter of Claim 17, in which said MFA microcontroller includes Model-Free Adaptive (MFA) controllers which control the DC-DC boost converters, and MFA

optimizers which provide maximum power point tracking (MPPT) to allow the power inverter to achieve optimal power production.

21. A scalable DC to AC power inversion system for providing AC power to a power grid from a plurality of individual DC power sources each having a DC power output port, comprising:

a) a plurality of power inverters, each of said power inverters having at least one DC power input port, an AC power input port, and an AC power output port, each of said DC power input ports having one DC power source connected thereto;

b) said AC power output port of each inverter being connected in a daisy chain to the AC power input port of the next inverter, except for the AC power input port of the first inverter being left open, and the AC power output port of the last inverter being connected to a power service panel of the power grid;

c) whereby said system is incrementally scalable by adding or subtracting DC power sources and daisy-chained inverters; and

d) whereby an optimal amount of AC power is generated and supplied to said power grid regardless of the performance of any individual power source.

22. The system of Claim 21, in which the output of each of said power inverters is single-phase AC.

23. The system of Claim 21, in which the output of each of said power inverters is three-phase AC.

24. The system of Claim 9 or 17, in which the said MFA microcontroller is programmed with a main program to iteratively:

a) turn on and off the inverter's generation circuit based on the DC power source input and conditions of the inverter and AC powerline,

b) calculate the inverter's power statistics such as the amount of power generated during a certain period of time;

c) perform diagnostics for the inverter's status and operation;

d) set the inverter's unit address;

e) perform powerline communications; and

f) respond to queries from data gathering or acquisition devices to report the power statistics.

25. The system of Claim 24, in which said MFA microcontroller is further programmed with an interrupt service routine (ISR) to:

a) respond to an interrupt;

b) save the current context of the main program;

c) read voltage and current signals from the DC source, DC-DC boost converter, and DC-AC inverter;

d) read phase and zero-crossing point data of the AC powerline;

e) perform maximum power point tracking (MPPT) for each DC power source connected to the inverter;

f) perform DC-AC inversion and AC synchronization;

g) send out PWM control signals through the digital output ports; and

h) restore the saved context of the main program so that the execution of the main program can be resumed.

26. A method of making a DC to AC power conversion system incrementally scalable, comprising:

a) providing a plurality of DC power sources and a plurality of DC to AC power inverters, said inverters each having an AC input port, an AC output port, and at least one DC input port;

b) connecting at least one of said DC power sources, respectively, to at least one of said DC input ports;

c) daisy-chaining at least two of said inverters, said AC power output port of each inverter being connected in a daisy chain to the AC power input port of the next inverter, except for the AC power input port of the first inverter being left open, and the AC power

output port of the last inverter being connected to a power service panel of the power grid; and

d) producing a total AC power that is the summation of the AC power supplied by each said inverter.

27. The method of Claim 26, in which the output of each of said power inverters is single-phase AC.

28.. The method of Claim 26, in which the output of each of said power inverters is three-phase AC.

Abstract

A method and apparatus is disclosed for intelligently inverting DC power from DC sources such as photovoltaic (PV) solar modules to single-phase or three-phase AC power to feed the power grid for electricity generation. A number of smart single-input, dual-input, triple-input, quad-input, and multiple-input power inverters in a mixed variety can easily connect to single, dual, triple, quad, and multiple DC power sources, invert the DC power to AC power, and daisy chain together to generate a total power, which is equal to the summation of the AC power supplied by each smart and scalable power inverter of this invention.

Date: **07/15/2010**

Approved for use through 7/31/2006. OMB 0651-0032
U.S. Patent and Trademark Office; U.S. DEPARTMENT OF COMMERCE

Under the Paperwork Reduction Act of 1995, no persons are required to respond to a collection of information unless it displays a valid OMB control number.

PATENT APPLICATION FEE DETERMINATION RECORD

Substitute for Form PTO-875

Application or Docket Number

12/837,162

APPLICATION AS FILED – PART I

FOR	(Column 1) NUMBER FILED	(Column 2) NUMBER EXTRA	SMALL ENTITY RATE ($)	SMALL ENTITY FEE ($)	OR	LARGE ENTITY RATE ($)	LARGE ENTITY FEE ($)
BASIC FEE (37 CFR 1.16(a), (b), or (c))	N/A	N/A	N/A	**82**		N/A8	
SEARCH FEE (37 CFR 1.16(k), (i), or (m))	N/A	N/A	N/A	**270**		N/A	
EXAMINATION FEE (37 CFR 1.16(o), (p), or (q))	N/A	N/A	N/A	**110**		N/A	
TOTAL CLAIMS (37 CFR 1.16(i))	**30**	**10**	X$ 26	**260**	OR	2X$52	
INDEPENDENT CLAIMS (37 CFR 1.16(h))	**7** minus 3	**4**	X$110	**440**		1X$220	
APPLICATION SIZE FEE (37 CFR 1.16(s))	If the specification and drawings exceed 100 sheets of paper, the application size fee due is $270 ($135 for small entity) for each additional 50 sheets or fraction thereof. See 35 U.S.C. 41(a)(1)(G) and 37 CFR						
12/10/9 MULTIPLE DEPENDENT CLAIM PRESENT (37 CFR 1.16(j))			195	**195**			
390			TOTAL	**1357**		TOTAL	**0**

APPLICATION AS AMENDED – PART II

AMENDMENT A

	(Column 1) CLAIMS REMAINING AFTER AMENDMENT	2	(Column 2) HIGHEST NUMBER PREVIOUSLY PAID FOR	(Column 3) PRESENT EXTRA	RATE ($)	ADDI-TIONAL FEE ($)	OR	OTHER THAN SMALL ENTITY RATE ($)	ADDI-TIONAL FEE ($)
Total (37 CFR 1.16(i))	*	Minus	**	=	x =		OR	x =	
Independent (37 CFR 1.16(h))	*	Minus	***	=	x =		OR	x =	
Application Size Fee (37 CFR 1.16(s))									
FIRST PRESENTATION OF MULTIPLE DEPENDENT CLAIM (37 CFR 1.16(j))					N/A		OR	N/A	
					TOTAL ADD'T FEE		OR	TOTAL ADD'T FEE	

AMENDMENT B

	(Column 1) CLAIMS REMAINING AFTER AMENDMENT		(Column 2) HIGHEST NUMBER PREVIOUSLY PAID FOR	(Column 3) PRESENT EXTRA	RATE ($)	ADDI-TIONAL FEE ($)	OR	RATE ($)	ADDI-TIONAL FEE ($)
Total (37 CFR 1.16(i))	*	Minus	**	=	x =		OR	x =	
Independent (37 CFR 1.16(h))	*	Minus	***	=	x =		OR	x =	
Application Size Fee (37 CFR 1.16(s))									
FIRST PRESENTATION OF MULTIPLE DEPENDENT CLAIM (37 CFR 1.16(j))					N/A		OR	N/A	
					ADD'T FEE		OR	ADD'T FEE	

* If the entry in column 1 is less than the entry in column 2, write "0" in column 3.

** If the "Highest Number Previously Paid For" IN THIS SPACE is less than 20, enter "20".

*** If the "Highest Number Previously Paid For" IN THIS SPACE is less than 3, enter "3".
The "Highest Number Previously Paid For" (Total or Independent) is the highest number found in the appropriate box in column 1.

This collection of information is required by 37 CFR 1.16. The information is required to obtain or retain a benefit by the public which is to file (and by the USPTO to process) an application. Confidentiality is governed by 35 U.S.C. 122 and 37 CFR 1.14. This collection is estimated to take 12 minutes to complete, including gathering, preparing, and submitting the completed application form to the USPTO. Time will vary depending upon the individual case. Any comments on the amount of time you require to complete this form and/or suggestions for reducing this burden, should be sent to the Chief Information Officer, U.S. Patent and Trademark Office, U.S. Department of Commerce, P.O. Box 1450, Alexandria, VA 22313-1450. DO NOT SEND FEES OR COMPLETED FORMS TO THIS ADDRESS. **SEND TO: Commissioner for Patents, P.O. Box 1450, Alexandria, VA 22313-1450.**