US 20050105224A1

(19) United States

(12) Patent Application Publication

(10) Pub. No.: US 2005/0105224 A1

(43) Pub. Date: May 19, 2005

Nishi

(54) INVERTER APPARATUS CONNECTED TO A PLURALITY OF DIRECT CURRENT POWER SOURCES AND DISPERSED-POWER-SOURCE SYSTEM HAVING INVERTER APPARATUS LINKED TO COMMERCIAL POWER SYSTEM TO OPERATE

(75) Inventor: **Shunsuke Nishi**, Katsuragi-shi (JP)

Correspondence Address:
NIXON & VANDERHYE, PC
1100 N GLEBE ROAD
8TH FLOOR
ARLINGTON, VA 22201-4714 (US)

(73) Assignee: **Sharp Kabushiki Kaisha**, Osaka (JP)

(21) Appl. No.: **10/981,769**

(22) Filed: **Nov. 5, 2004**

(30) **Foreign Application Priority Data**

Nov. 13, 2003 (JP) ..... 2003-383799 (P)

Publication Classification

(51) **Int. Cl.**[7] **H02H 7/00**

(52) **U.S. Cl.** **361/18**

(57) **ABSTRACT**

An inverter apparatus includes a plurality of converters each receiving a direct current power from respective plurality of solar cell arrays having different output voltage ranges, and an inverter transforming the direct current power from the plurality of converters into an alternating current power and allowing the alternating current power to reversely flow into a commercial power system. The plurality of converters have different voltage input ranges corresponding to the output voltage ranges of the plurality of solar cell arrays, and each control, based on a pulse frequency modulation control signal received from a corresponding converter control unit, an output voltage of corresponding one of the plurality of solar cell arrays, so that an output power from corresponding one of the plurality of solar cell arrays becomes maximum.

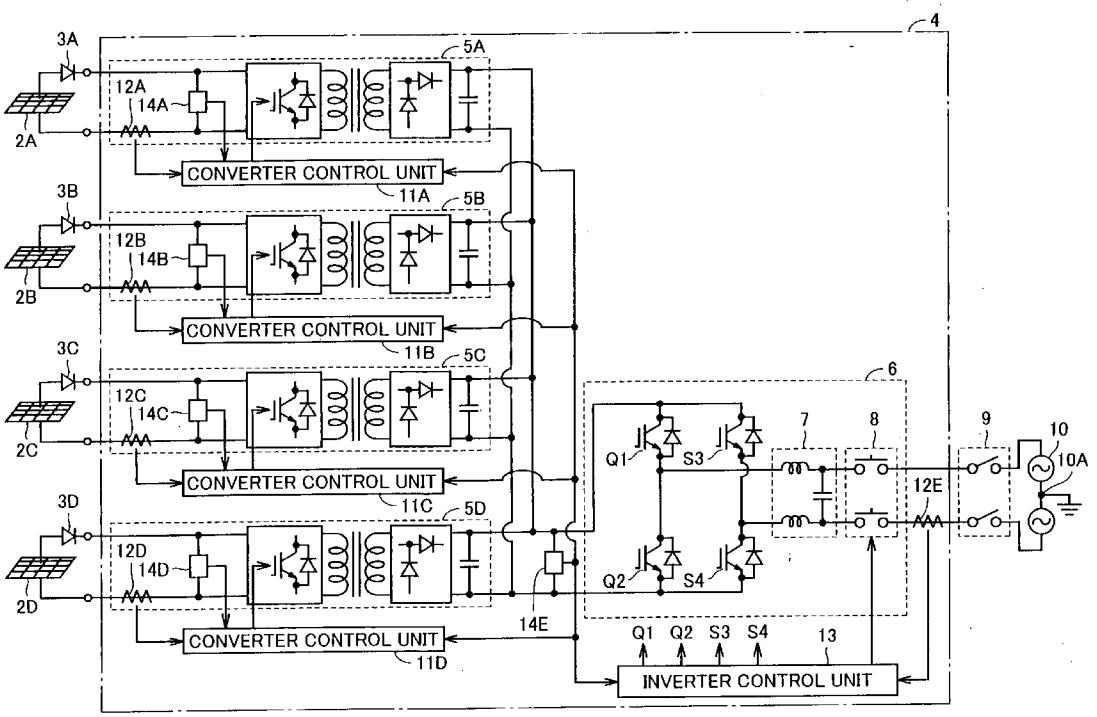

FIG.1

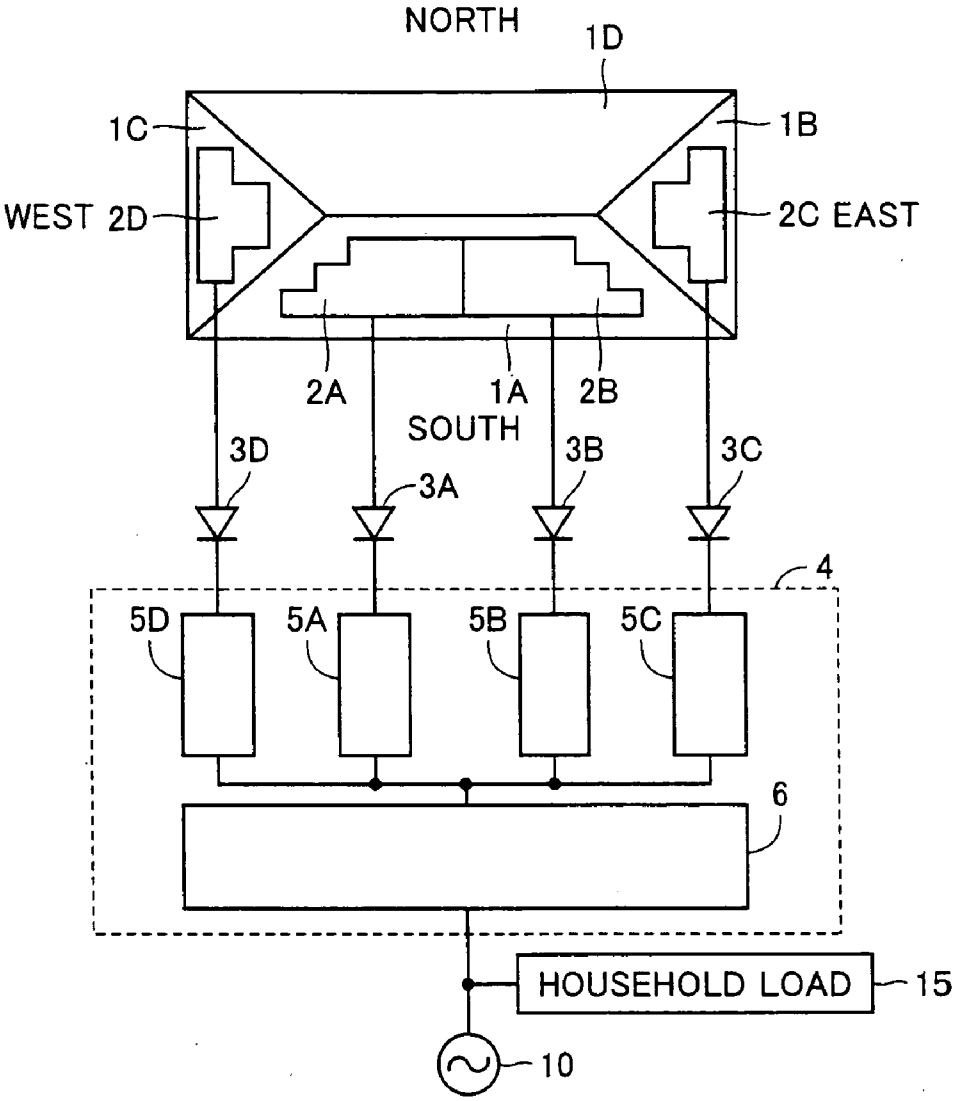
NORTH
1D
1C
1B
WEST 2D
2C EAST
2A
1A
2B
SOUTH
3D
3A
3B
3C
4
5D
5A
5B
5C
6
HOUSEHOLD LOAD
15
10

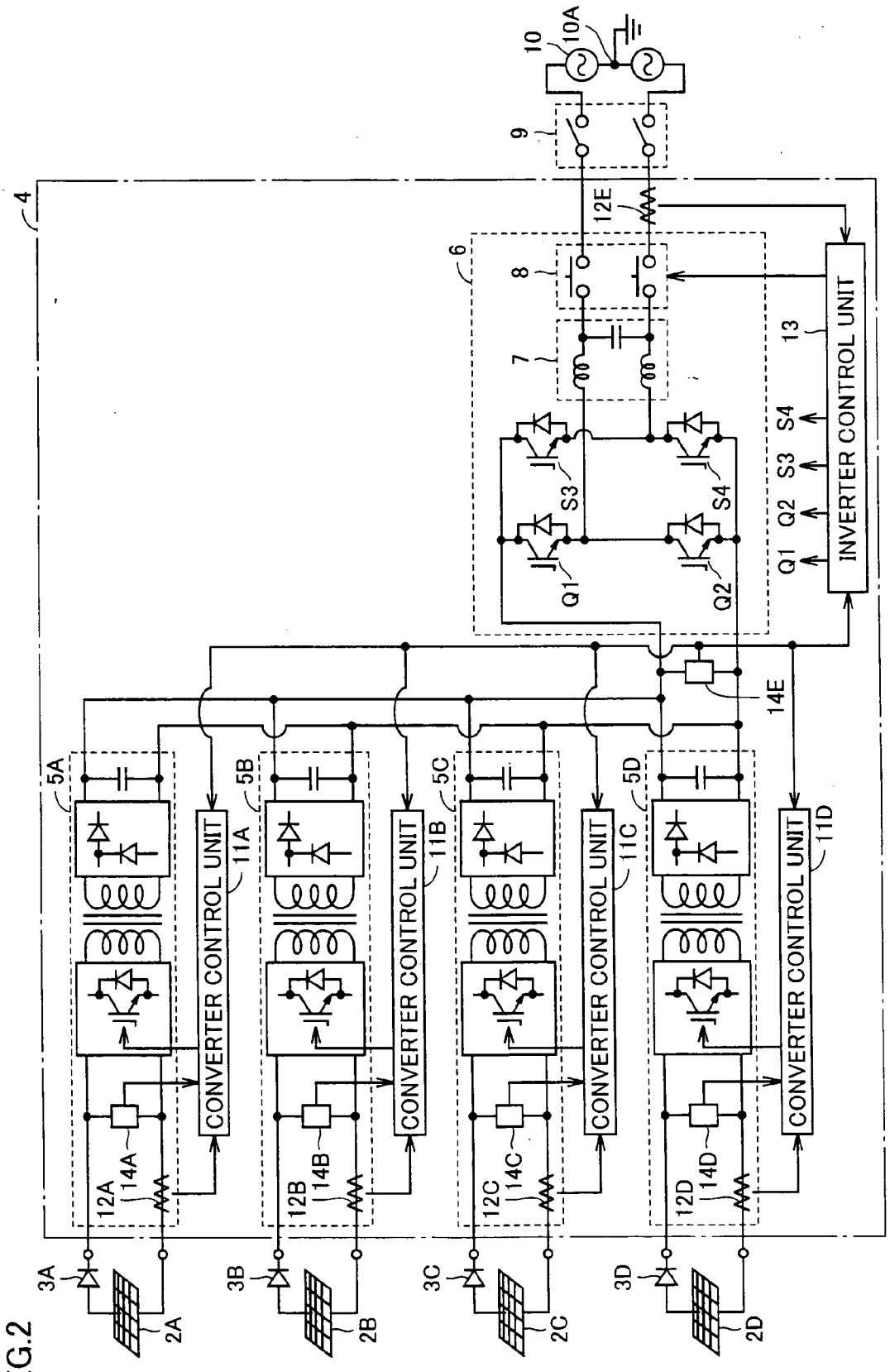
4
10
10A
9
12E
6
8
7
13
INVERTER CONTROL UNIT
S3
S4
Q1
Q2
14E
5A
5B
5C
5D
CONVERTER CONTROL UNIT
11A
11B
11C
11D
12A
14A
12B
14B
12C
14C
12D
14D
3A
3B
3C
3D
2A
2B
2C
2D

FIG.2

FIG.3

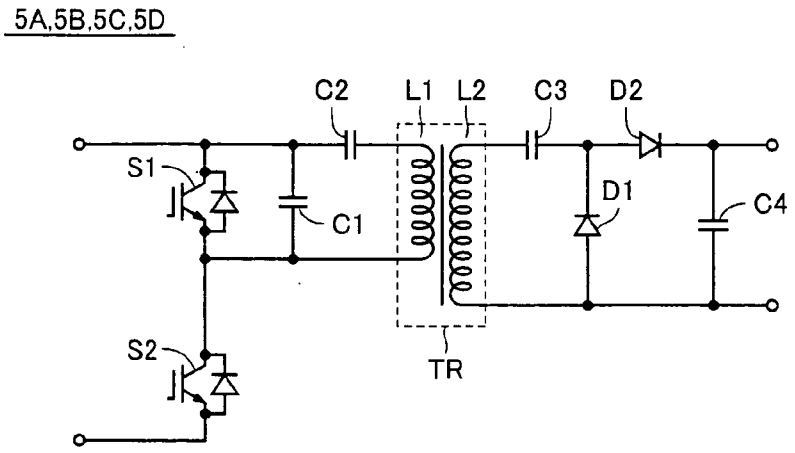
5A,5B,5C,5D
C2
L1
L2
C3
D2
S1
C1
D1
C4
S2
TR

FIG.4

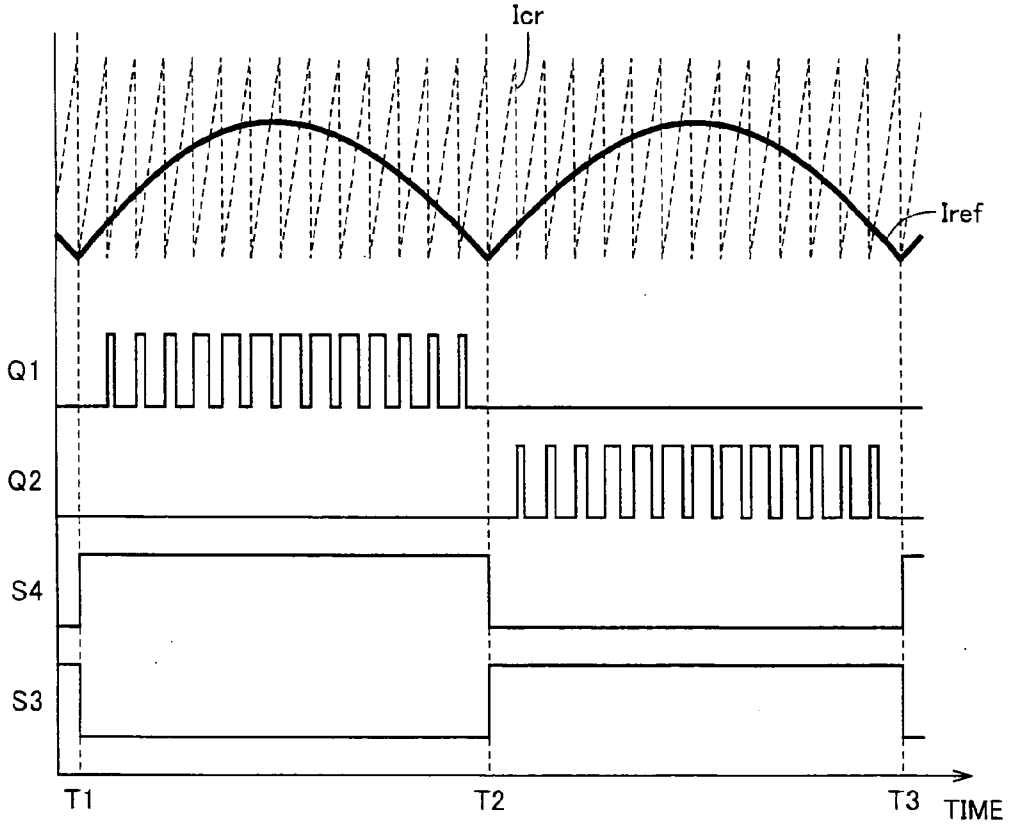
Icr
Iref
Q1
Q2
S4
S3
T1
T2
T3
TIME

FIG.5

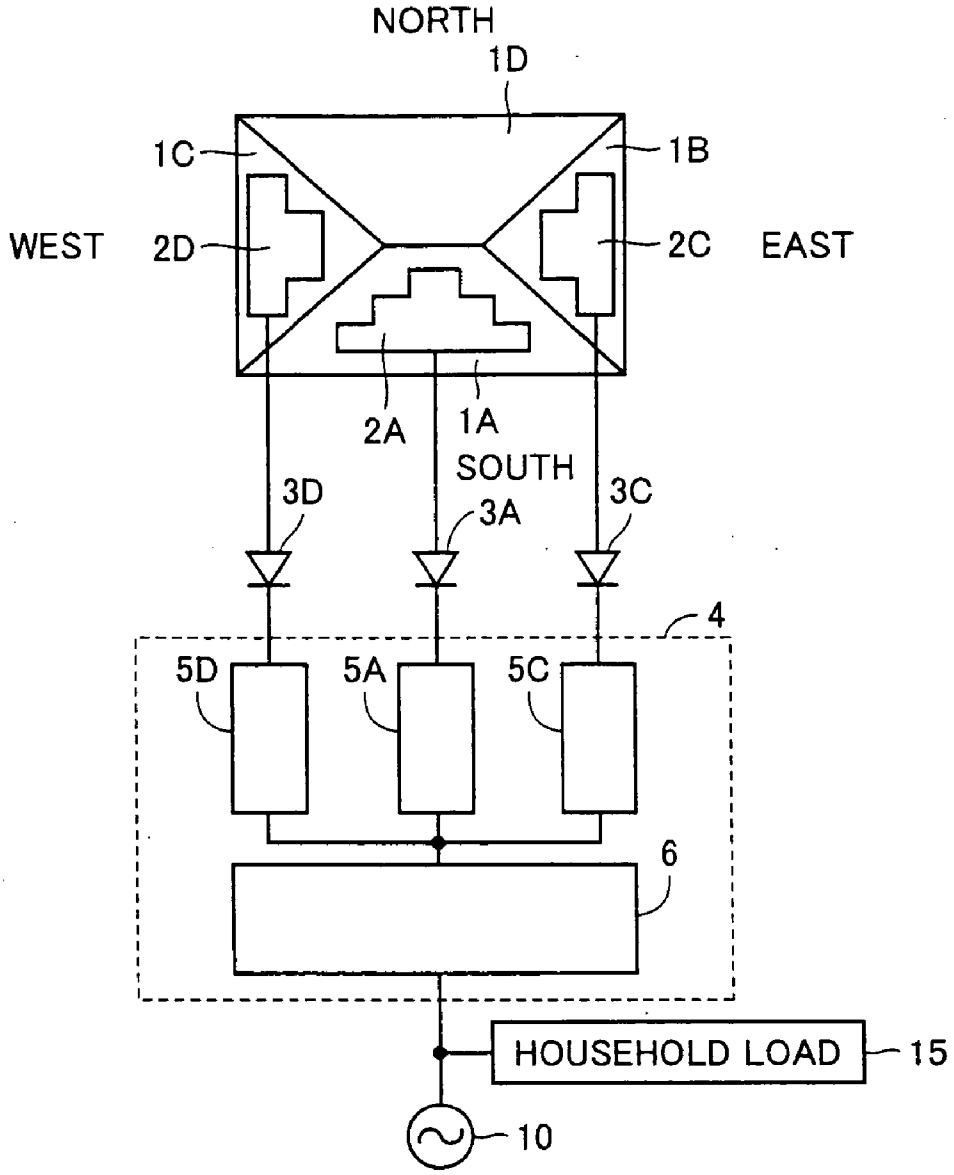
NORTH
1D
1C
1B
WEST
2D
2C
EAST
2A
1A
SOUTH
3D
3A
3C
4
5D
5A
5C
6
HOUSEHOLD LOAD
15
10

FIG.6

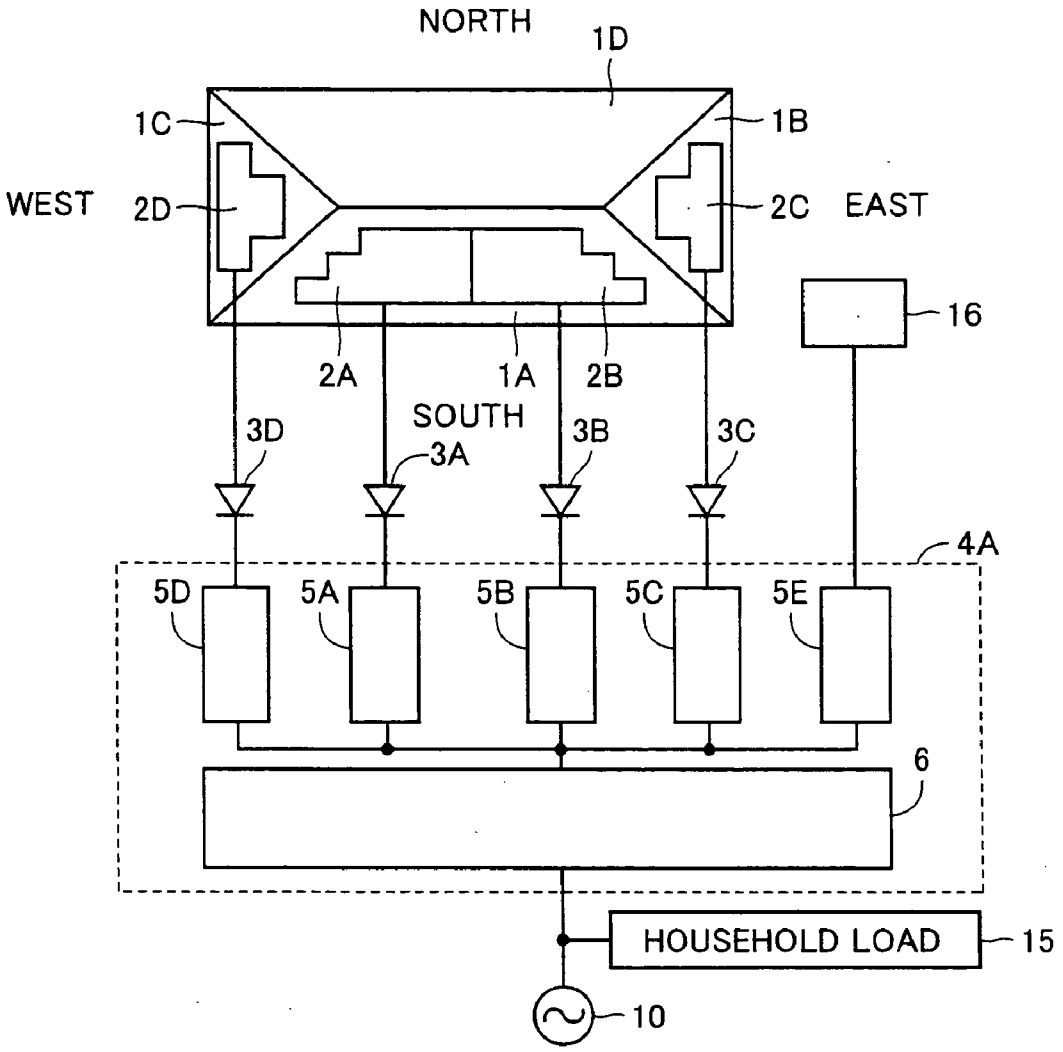
NORTH
1D
1C
1B
WEST
2D
2C
EAST
16
2A
1A
2B
SOUTH
3D
3A
3B
3C
4A
5D
5A
5B
5C
5E
6
HOUSEHOLD LOAD
15
10

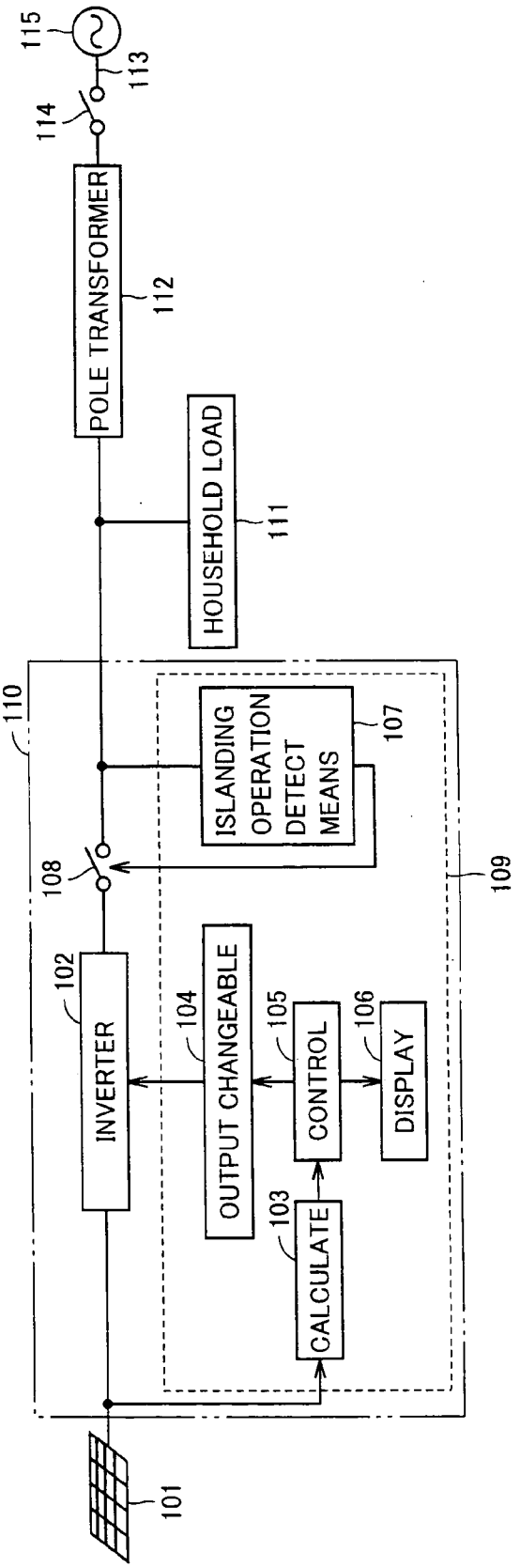

FIG.7 PRIOR ART

FIG.8 PRIOR ART

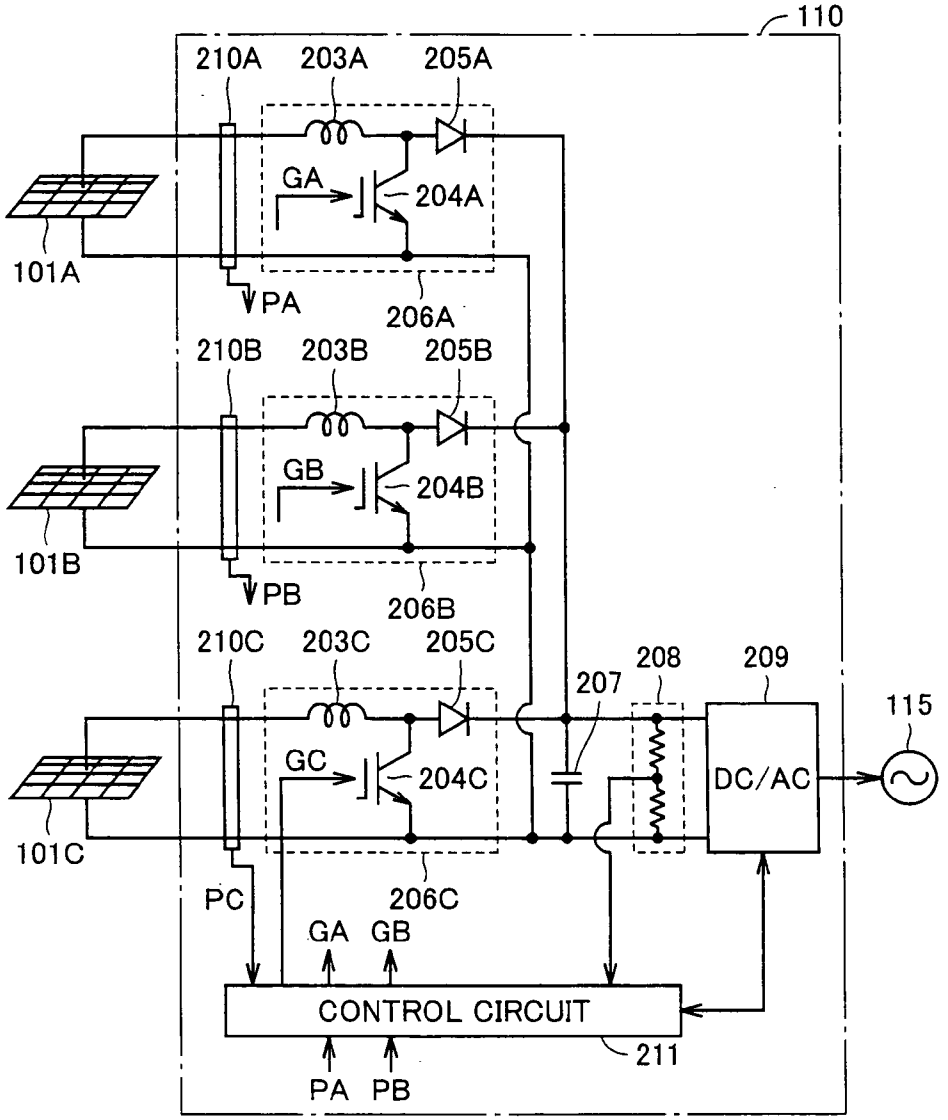

FIG.9 PRIOR ART

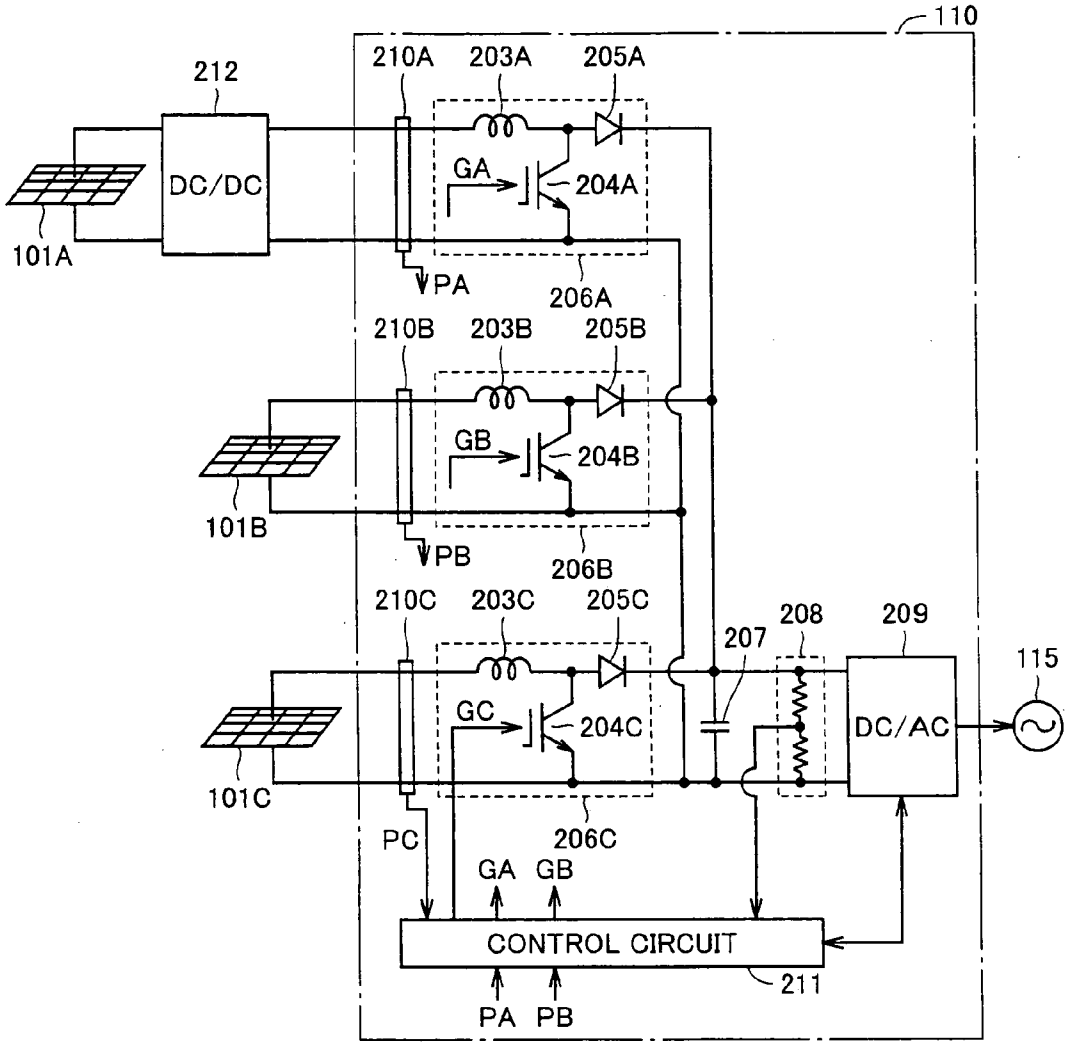

INVERTER APPARATUS CONNECTED TO A PLURALITY OF DIRECT CURRENT POWER SOURCES AND DISPERSED-POWER-SOURCE SYSTEM HAVING INVERTER APPARATUS LINKED TO COMMERCIAL POWER SYSTEM TO OPERATE

[**0001**] This nonprovisional application is based on Japanese Patent Application No. 2003-383799 filed with the Japan Patent Office on Nov. 13, 2003 the entire contents of which are hereby incorporated by reference.

BACKGROUND OF THE INVENTION

[**0002**] 1. Field of the Invention

[**0003**] The present invention relates to an inverter apparatus and a dispersed-power-source system, and particularly, to an inverter apparatus that transforms a DC (Direct Current) power received from each of a plurality of DC power sources into an AC (Alternating Current) power and outputs the AC power, and a dispersed-power-source system in which such an inverter apparatus is linked to a commercial power system to operate.

[**0004**] 2. Description of the Background Art

[**0005**] Conventionally, a dispersed-power-source system linked to a commercial power system has practically been used. In such a power source system, a DC power outputted from a DC power source such as a solar battery, a storage battery, a power generator or the like is transformed into an AC power, and the transformed AC power is supplied to each household electric appliance. Additionally, it is also possible to allow a surplus power not being consumed in the home to reversely flow into the commercial power system to be sold to an electric power utility company.

[**0006**] As such a dispersed-power-source system, Japanese Patent Laying Open No. 11-318042 discloses a home photovoltaic power generation system in which a solar battery serves as a DC power source.

[**0007**] **FIG. 7** is a functional block diagram functionally showing a configuration of the home photovoltaic power generation system disclosed in Japanese Patent Laying Open No. 11-318042.

[**0008**] Referring to **FIG. 7**, the home photovoltaic power generation system includes a solar cell array **101**, an inverter apparatus **110**, a household load **111**, a pole transformer **112**, a distribution line **113**, a breaker **114**, and a commercial power system **115**. Inverter apparatus **110** includes an inverter circuit **102**, a breaker **108**, and a microcomputer **109**. Microcomputer **109** is formed of calculate means **103**, output changeable means **104**, control means **105**, display means **106**, and islanding operation detect means **107**.

[**0009**] Solar cell array **101** is a DC power source formed of a solar cell string in which a plurality of solar cell modules are connected in series, and an output power thereof is different depending on the number of the solar cell modules connected in series. Inverter circuit **102** transforms a DC power outputted from solar cell array **101** into an AC power. Breaker **108** disconnects solar cell array **101** and inverter circuit **102** from commercial power system **115** in accordance with an instruction received from islanding operation detect means **107**, which will be described later.

[**0010**] Household load **111** generally indicates household electric appliances, and it operates while receiving an AC power from dispersed power sources constituted by solar cell array **101** and inverter apparatus **110**. Household load **111** is supplied with an AC power also from commercial power system **115** when power consumption becomes greater than the power supply from the dispersed power sources.

[**0011**] Pole transformer **112** transforms voltage between household load **111** and commercial power system **115**. Breaker **114** trips when there is a malfunction in commercial power system **115**.

[**0012**] Calculate means **103** in microcomputer **109** calculates power generation of solar cell array **101** based on an output voltage and an output current of solar cell array **101** detected by a sensor that is not shown. Output changeable means **104** changes the output voltage of solar cell array **101** based on an instruction received from control means **105**.

[**0013**] Control means **105** receives a power generation value of solar cell array **101** calculated by calculate means **103**, and tracks out the output voltage of solar cell array **101** that attains the greatest power generation for every prescribed time. Then, based on thus tracked out output voltage, control means **105** controls output changeable means **104**. Display means **106** displays various information related to the dispersed power sources, for example when the amount of power generation of solar cell array **101** is abnormal.

[**0014**] Islanding operation detect means **107** monitors frequency fluctuations and/or voltage fluctuations in an AC power, and when it detects great frequency fluctuations and/or voltage fluctuations during an islanding operation in which household load **111** is supplied only with an output power from inverter apparatus **110** because of power failure of commercial power system **115** or the like, it allows breaker **108** to trip so as to stop an output of inverter apparatus **110**.

[**0015**] In this home photovoltaic power generation system, when power consumption of household load **111** becomes greater than the output power from inverter apparatus **110**, household load **111** is supplied with the output power from inverter apparatus **110** as well as the power from commercial power system **115**, purchasing the shortfall from the electric power utility company.

[**0016**] On the other hand, when power consumption of household load **111** becomes smaller than the output power from inverter apparatus **110**, surplus power not being consumed in the household load **111** is allowed to reversely flow into commercial power system **115** from inverter apparatus **110** to be sold to the electric power utility company.

[**0017**] Furthermore, during the aforementioned islanding operation, or during an isolated operation in which the dispersed power source operates fully independent from commercial power system **115**, household load **111** is supplied only with the output power of inverter apparatus **110**.

[**0018**] **FIG. 8** is a circuit diagram of a substantial portion of inverter apparatus **110** shown in **FIG. 7**. Here, **FIG. 8** shows the circuit diagram of inverter apparatus **110** where solar cell array **101** shown in **FIG. 7** is constituted by three solar cell strings.

[0019] Referring to **FIG. 8**, inverter apparatus **110** includes booster choppers **206**A-**206**C, a capacitor **207**, a voltage dividing resistor **208**, an inverter **209**, power detect units **210**A-**210**C, and a control circuit **211**. Booster chopper **206**A is formed of a reactor **203**A, a switching element **204**A, and a diode **205**A; booster chopper **206**B is formed of a reactor **203**B, a switching element **204**B, and a diode **205**B; and booster chopper **206**C is formed of a reactor **203**C, a switching element **204**C, and a diode **205**C.

[0020] Booster choppers **206**A-**206**C each receive a DC power from respective solar cell arrays **101**A-**10**IC independently constituted from one another. Switching elements **204**A-**204**C receive respective control signals GA-GC from control circuit **211**, turn on/off according to the duty of respective control signals GA-GC, and thereby each control a current flowing through respective reactors **203**A-**203**C.

[0021] Reactors **203**A-**203**C output the energy accumulated therein to capacitor **207** via respective diodes **205**A-**205**C, and capacitor **207** charges the power from reactors **203**A-**203**C.

[0022] Inverter **209** receives a DC voltage generated between opposite ends of capacitor **207**, transforms it into an AC power synchronizing with commercial power system **115**, and outputs the AC power to the commercial power system **115**.

[0023] Power detect units **210**A-**210**C each detect an output voltage and an output current of respective solar cell arrays **101**A-**101**C, and output thus detected output voltage and output current to control circuit **211**. Voltage dividing resistor **208** is provided for detecting a voltage between terminals of capacitor **207**, i.e., for detecting an input voltage to inverter **209**.

[0024] Control circuit **211** calculates an output power of each of solar cell arrays **101**A-**101**C, i.e., an input power of each of booster choppers **206**A-**206**C, based on the output voltage and output current of each of solar cell arrays **101**A-**101**C respectively detected by power detect units **210**A-**210**C, and controls the duty of control signals GA-GC outputted to respective switching elements **204**A-**204**C, so that an input power at each of booster choppers **206**A-**206**C becomes maximum.

[0025] Control circuit **211** detects an input voltage to inverter **209**, i.e., the voltage between terminals of capacitor **207**, using voltage dividing resistor **208**. When this detected voltage value is at least at a prescribed protection voltage value, control circuit **211** reduces the duty ratio of control signals GA-GC thereby controls the voltage between terminals of capacitor **207** to be less than the protection voltage value.

[0026] Thus, in this inverter apparatus **110**, booster choppers **206**A-**206**C each control an output voltage of respective solar cell arrays **101**A-**101**C so that an output power of respective solar cell arrays **101**A-**101**C becomes maximum within the range not exceeding protection voltage value, and inverter **209** transforms, while continuing control of the output voltage of each of booster choppers **206**A-**206**C to be a constant voltage, the DC power outputted from each of booster choppers **206**A-**206**C into an AC power and outputs the AC power to commercial power system **115**.

[0027] In the home photovoltaic power generation system as described above, in an attempt to install the solar cell modules on the roof of a house as many as possible for improving the power generation while such a roof on which the solar cell array is installed vary in shape, preferably the solar cell array is arranged also on a roof surface of a small area. Specifically, as for roof surfaces of a hipped roof, for example, while roof surfaces facing toward the east and the west have areas generally smaller than that of a roof surface facing toward the south, it is desirable to install an solar cell array also on each of such roof surfaces facing toward the east and the west.

[0028] Here, due to the relationship among roof surface areas, the solar cell array installed on each of the east- and west-facing roof surfaces has smaller number of solar cell modules connected in series than the solar cell array installed on the south-facing roof surface has. Therefore, an output voltage range of each of the solar cell arrays respectively installed on the east- and west-facing roof surfaces is smaller than that of the solar cell array installed on the south-facing roof surface.

[0029] Considering each of solar cell arrays installed on roof surfaces as one DC power source, it is desirable that the inverter apparatus receiving a DC power from each of a plurality of DC power sources can address a plurality of DC power sources with different output voltage ranges in order to perform efficient power generation.

[0030] The inverter apparatus in the home photovoltaic power generation system disclosed in Japanese Patent Laying Open No. 11-318042 is useful as the one that can perform maximum power point tracking for each of a plurality of solar cell arrays (DC power sources) and that can obtain maximum power from each of DC power sources, it cannot address a plurality of DC power sources with different output voltage ranges. In other words, there is a limit on a number of the solar cell modules to be connected in order to keep the output voltage range of each DC power sources within a prescribed input voltage range of inverter apparatus **10**.

[0031] Then, as for a DC power source having a low output voltage range, a booster circuit may be added to the front stage of the booster chopper that receives a DC power from that DC power source.

[0032] **FIG. 9** shows a circuit diagram where a booster circuit is added to the front stage of inverter apparatus **10** in the circuit shown in **FIG. 8**.

[0033] Referring to **FIG. 9**, solar cell array **10** A is low in output voltage range than solar cell arrays **101**B, **101**C. Between solar cell array **101**A and booster chopper **206**A in inverter apparatus **10**, a booster circuit **212** is provided. Thus, an input voltage of booster chopper **206**A can be kept within a prescribed range.

[0034] However, when the booster circuit is added to the front stage of inverter apparatus **110** as shown in **FIG. 9**, costs are increased for that circuit. Moreover, efficiency is reduced also, as the output from the DC power source is obtained via the booster circuit.

[0035] Further, in a dispersed-power-source system of a hybrid type including various DC power sources such as not only the solar batteries but also storage batteries, fuel cells, generators and the like, which have different output voltage ranges, the aforementioned problem is more significant.

Considering the diversification of the DC power sources of practical use, it is highly advantageous to structure a dispersed-power-source system of,a hybrid type that is higher in efficiency and lower in costs.

SUMMARY OF THE INVENTION

[0036] Accordingly, the present invention is made to solve the aforementioned problem, and an object of the present invention is to provide an inverter apparatus that can address a plurality of DC power sources having different output voltage ranges.

[0037] Another object of the present invention is to provide a dispersed-power-source system having a system-linked inverter apparatus that can address a plurality of DC power sources having different output voltage ranges.

[0038] According to the present invention, an inverter apparatus is an inverter apparatus provided between a plurality of DC power sources and a load for transforming a DC power received from each of the plurality of DC power sources into an AC power and supplying the load with the AC power. The inverter apparatus includes: a plurality of converters each controlling an output voltage of a corresponding DC power source so that the DC power outputted from the corresponding DC power source becomes maximum; and an inverter transforming a combined DC power obtained by combining DC outputs from the plurality of converters into the AC power and outputting the AC power to the load. The plurality of converters include at least one first converter respectively corresponding to at least one first DC power source included in the plurality of DC power sources and each having a first voltage input range, and at least one second converter respectively corresponding to at least one second DC power source included in the plurality of DC power sources, being different from the at least one first DC power source corresponding to the at least one first converter and each having a second voltage input range being different from the first voltage input range.

[0039] Preferably, a voltage level of the AC power is a commercial AC voltage, and the inverter is further connected to a commercial power system for outputting the AC power to the load and/or the commercial power system.

[0040] Preferably, the at least one first converter each controls, when the DC power received from the corresponding first DC power source exceeds a first prescribed maximum input power value, the output voltage of the corresponding first DC power sources so that the DC power becomes lower than the first prescribed maximum input power value, and the at least one second converter each controls, when the DC power received from the corresponding second DC power source exceeds a second prescribed maximum input power value being different from the first prescribed maximum input power value, the output voltage of the corresponding second DC power source so that the DC power becomes lower than the second prescribed maximum input power value.

[0041] Preferably, each of the DC power sources respectively corresponding to the at least one first and second converters is a solar battery, and the at least one first converter is provided as many as the at least one second converter is provided.

[0042] Preferably, each of the at least one first and second converters is formed as a unit and capable of being attached and removed to and from the inverter apparatus by the unit.

[0043] Further, according to the present invention, a dispersed-power-source system includes a plurality of DC power sources; a load; and a system-linked inverter apparatus provided between the plurality of DC power sources and the load as well as a commercial power system for transforming a DC power received from each of the plurality of DC power sources into an AC power and supplying the load and/or the commercial power system with the AC power. The system-linked inverter apparatus includes: a plurality of converters each controlling an output voltage of a corresponding DC power source so that the DC power outputted from the corresponding DC power source becomes maximum; and an inverter transforming a combined DC power obtained by combining DC outputs from the plurality of converters into the AC power and outputting the AC power to the load and/or the commercial power system. The plurality of converters include at least one first converter respectively corresponding to at least one first DC power source included in the plurality of DC power sources and each having a first voltage input range, and at least one second converter respectively corresponding to at least one second DC power source included in the plurality of DC power sources, being different from the at least one first DC power source corresponding to the at least one first converter and each having a second voltage input range being different from the first voltage input range.

[0044] Preferably, the system-linked inverter apparatus further includes a sensor detecting a malfunction in the commercial power system, and a control circuit stopping, when the sensor detects a malfunction in the commercial power system, an operation of the system-linked inverter apparatus.

[0045] Preferably, the plurality of DC power sources include different types of power generation apparatuses.

[0046] According to the present invention, as an inverter apparatus including a plurality of converters having different input voltage ranges is included, it is not necessary to provide a booster circuit to the front stage of the inverter apparatus for the adjustment to an input voltage range. Accordingly, costs can be suppressed and reduction of efficiency due to provision of the booster circuit will not occur.

[0047] Additionally, the inverter apparatus and the dispersed-power-source system according to the present invention can be applied to a home power generation system that transforms a DC power from a plurality of DC power sources constituted of solar batteries, fuel cells, generators or the like into a commercial AC power and outputs this AC power to a household load, and that allows the AC power to reversely flow into the commercial power system. The inverter apparatus and the dispersed-power-source system according to the present invention are not limited to home use, and they can be utilized for an industrial power generation system.

[0048] The foregoing and other objects, features, aspects and advantages of the present invention will become more apparent from the following detailed description of the present invention when taken in conjunction with the accompanying drawings.

BRIEF DESCRIPTION OF THE DRAWINGS

[0049] **FIG. 1** is an overall block diagram showing a configuration of a dispersed-power-source system according to a first embodiment of the present invention.

[0050] **FIG. 2** is a circuit diagram showing a configuration of an inverter apparatus shown in **FIG. 1**.

[0051] **FIG. 3** is a circuit diagram showing a configuration of a converter shown in **FIG. 2** in detail.

[0052] **FIG. 4** is an operation waveform diagram of switching elements in the inverter shown in **FIG. 2**.

[0053] **FIG. 5** is an overall block diagram showing another configuration of the dispersed-power-source system according to the first embodiment of the present invention.

[0054] **FIG. 6** is an overall block diagram showing a configuration of a dispersed-power-source system according to a second embodiment of the present invention.

[0055] **FIG. 7** is a functional block diagram functionally showing a configuration of a home photovoltaic power generation system disclosed in Japanese Patent Laying Open No. 11-318042.

[0056] **FIG. 8** is a circuit diagram of a substantial portion of an inverter apparatus shown in **FIG. 7**.

[0057] **FIG. 9** is a circuit diagram where a booster circuit is added to the front stage of the inverter apparatus in the circuit shown in **FIG. 8**.

DESCRIPTION OF THE PREFERRED EMBODIMENTS

[0058] In the following, referring to the drawings, embodiments of the present invention will be described in detail. Throughout the drawings, identical or corresponding parts are denoted by the identical reference character, and description thereof will not be repeated.

First Embodiment

[0059] **FIG. 1** is an overall block diagram showing a configuration of a dispersed-power-source system according to a first embodiment of the present invention.

[0060] Referring to **FIG. 1**, the dispersed-power-source system according to the first embodiment includes solar cell arrays **2A-2D**, diodes **3A-3D**, an inverter apparatus **4**, a household load **15**, and a commercial power system **10**. Inverter apparatus **4** includes converters **5A-5D** and an inverter **6**.

[0061] Solar cell arrays **2A-2D** are arranged, on a hipped roof of a house, at a portion positioned on the west side in a roof surface **1A** facing toward the south, at a portion positioned on the east side in roof surface **1A** facing toward the south, at a roof surface **1B** facing toward the east, and at a roof surface **1C** facing toward the west, respectively. Solar cell arrays **2A-2D** are each constituted by a plurality of solar cell modules each having a maximum output voltage of about 10.5 V, for example, serially connected in a number according to the area of respective roof surfaces.

[0062] For example, solar cell arrays **2A**, **2B** arranged at roof surface **1A** that faces toward the south, receiving large amount of solar radiation and having a large area, are each constituted by about **22** pieces of solar cell modules connected in series, while solar cell arrays **2C**, **2D** arranged at roof surface **1B** facing toward the east and roof surface **1C** facing toward the west, respectively, receiving small amount of solar radiation and having small area as compared to the south side, are each constituted by about 7 pieces of solar cell modules connected in series.

[0063] Accordingly, solar cell arrays **2A**, **2B** and solar cell arrays **2C**, **2D** are different in output voltage range and output power range. Specifically, under a certain solar radiation condition, solar cell arrays **2A**, **2B** each output a DC voltage of about 230V, while solar cell arrays **2C**, **2D** each output a DC voltage of about 70V. It should be noted that no solar cell array is arranged at roof surface **1D** facing toward the north, as it receives small amount of solar radiation as compared to the other roof surfaces.

[0064] Diodes **3A-3D** prevent reverse flow of power from inverter apparatus **4** to solar cell arrays **2A-2D**, and protect solar cell arrays **2A-2D** from the reverse current.

[0065] Converters **5A-5D** each receive a DC power outputted from respective solar cell arrays **2A-2D**. While controlling an output voltage of respective solar cell arrays **2A-2D** so that the output power of respective solar cell arrays **2A-2D** becomes maximum, converters **5A-5D** boost the output voltage of respective solar cell arrays **2A-2D** to a prescribed voltage, and output the boosted voltage.

[0066] Here, solar cell arrays **2A-2D** respectively connected to converters **5A-5D** each have a different output voltage, and an input voltage range of each of converters SA, **5B** is designed to be 80V-320V, while an input voltage range of each of converters **5C**, **5D** is designed to be 50V-160V. Accordingly, the output voltages of solar cell arrays **2A-2D**, i.e., the input voltages of converters **5A-5D**, will not deviate from the input voltage ranges of converters **5A-5D**, respectively, and it is not necessary to provide booster circuits between solar cell arrays **2C**, **2D** having low output voltages and converters **5C**, **5D**, respectively, as described in Description of the Background Art.

[0067] Inverter **6** receives a DC power, which is a combined DC power of every DC power outputted from each of converters **5A-5D**. Inverter **6** continues control of the input voltage to be a DC voltage of, for example, about 330V-350V, and transforms the received DC power into a commercial AC power formed of a commercial voltage, and supplies this AC power to household load **15** and/or commercial power system **10**.

[0068] Thus, inverter apparatus **4** in the dispersed-power-source system includes a plurality of converters having different input voltage ranges, and therefore it can transform a DC power outputted from each of a plurality of DC power sources having different output voltage ranges into a commercial AC power, without providing a booster circuit at a front stage or imposing limit on a number of solar cell modules to be connected for constituting an solar cell array.

[0069] **FIG. 2** is a circuit diagram showing a configuration of inverter apparatus **4** shown in **FIG. 1**.

[0070] Referring to **FIG. 2**, inverter apparatus **4** includes converters **5A-5D**, inverter **6**, converter control units **11A-11D** provided corresponding to converters **5A-5D**, respectively, an inverter control unit **13**, a voltage sensor **14E**, and

a current sensor **12**E. Converters **5**A-**5**D are provided with voltage sensors **14**A-**14**D each detecting a voltage of the input side, and current sensors **12**A-**12**D each detecting a current of the input side, respectively.

[**0071**] Each of converters **5**A-**5**D is a DC-DC converter formed of a switching element, a high-frequency transformer, a rectifier diode, and an output capacitor. Converters **5**A-**5**D each receive a PFM (Pulse Frequency Modulation) control signal of which switching frequency is about 15 kHz-70 kHz from respective corresponding converter control units **11**A-**11**D. Each switching element turns on/off in accordance with this PFM control signal, whereby an input voltage is boosted to a prescribed output voltage.

[**0072**] Actually, as described later, an output voltage of each of converters **5**A-**5**D is controlled to be a constant voltage, for example, of about 330V-350V by inverter **6**. Therefore, converters **5**A-**5**D each change an operating point of the input voltage, i.e., the output voltage of corresponding one of solar cell arrays, in accordance with the duty of PFM control signal received from respective corresponding converter control units **11**A-**11**D.

[**0073**] Converter control unit **11**A receives detection values of an input voltage and an output voltage of converter **5**A from voltage sensors **14**A, **14**E, respectively, and receives detection value of an input current of converter **5**A from current sensor **12**A. Converter control unit **11**A controls the pulse width of the PFM control signal so that the input voltage of converter **5**A falls within the range of 80V-320V, and outputs this PFM control signal to converter **5**A. When the input voltage of converter **5**A deviates from the aforementioned input voltage range, converter control unit **11**A stops the operation of converter **5**A.

[**0074**] Converter control unit **11**B receives detection values of an input voltage and an output voltage of converter **5**B from voltage sensors **14**B, **14**E, respectively, and receives detection value of an input current of converter **5**B from current sensor **12**B. Converter control unit **11**B controls the pulse width of the PFM control signal so that the input voltage of converter **5**B falls within the range of 80V-320V, and outputs this PFM control signal to converter **5**B. When the input voltage of converter **5**B deviates from the aforementioned input voltage range, converter control unit **11**B stops the operation of converter **5**B.

[**0075**] Converter control unit **11**C receives detection values of an input voltage and an output voltage of converter **5**C from voltage sensors **14**C, **14**E, respectively, and receives detection value of an input current of converter **5**C from current sensor **12**C. Converter control unit **11**C controls the pulse width of the PFM control signal so that the input voltage of converter **5**C falls within the range of 50V-160V, and outputs this PFM control signal to converter **5**C. When the input voltage of converter **5**C deviates from the aforementioned input voltage range, converter control unit **11**C stops the operation of converter **5**C.

[**0076**] Converter control unit **11**D receives detection values of an input voltage and an output voltage of converter **5**D from voltage sensors **14**D, **14**E, respectively, and receives detection value of an input current of converter **5**D from current sensor **12**D. Converter control unit **11**D controls the pulse width of the PFM control signal so that the input voltage of converter **5**D falls within the range of 50V-160V, and outputs this PFM control signal to converter **5**D. When the input voltage of converter **5**D deviates from the aforementioned input voltage range, converter control unit **11**D stops the operation of converter **5**D.

[**0077**] Here, converter control units **11**A-**11**D each calculate an output power of respective solar cell arrays **2**A-**2**D based on corresponding input voltage detection value and input current detection value, and control respective converters **5**A-**5**D so that the output power of respective solar cell arrays **2**A-**2**D becomes maximum. Specifically, converter control units **11**A-**11**D each control the pulse width of PFM control signal so that the output power of respective solar cell arrays **2**A-**2**D becomes maximum, and output the PFM control signal to respective converters **5**A-**5**D.

[**0078**] Converter control units **11**A-**11**D control converters **5**A-**5**D, respectively, when the output voltage detection value received from voltage sensor **14**E exceeds a prescribed protection voltage value, so that the output voltage of respective converters **5**A-**5**D becomes smaller than this prescribed protection voltage value. Specifically, converter control units **11**A-**11**D each control the pulse width of PFM control signal so as to reduce the input power of respective converters **5**A-**5**D.

[**0079**] Further, a maximum input power is determined for each of the converters. When a calculated input power of each of converters **5**A-**5**D exceeds the corresponding maximum input power value, converter control units **11**A-**11**D respectively control converters **5**A-**5**D so that the input power of each of converters **5**A-**5**D becomes smaller than the maximum input power values. Specifically, when the maximum input power value for each of converter control units **11**A, **11**B is determined as 1.6 kW, and the maximum input power value for each of converter control units **11**C, **11**D is determined as 800W, for example, converter control units **11**A-**11**D each compare the calculated input power with the aforementioned corresponding maximum input power value, and when the input power exceeds the maximum input power value, converter control units **11**A-**11**D each stop maximum power point tracking control, and each control the pulse width of PFM control signal so as to reduce the input power, i.e., the output power of respective solar cell arrays **2**A-**2**D.

[**0080**] **FIG. 3** is a circuit diagram showing a configuration of converters **5**A-**5**D shown in **FIG. 2** in detail.

[**0081**] Referring to **FIG. 3**, converters **5**A-**5**D are each formed of switching elements S**1**, S**2**, diodes D**1**, D**2**, capacitors C**1**-C**4**, and an insulation transformer TR. Switching elements S**1**, S**2** are each constituted by, for example, an IGBT (Insulated Gate Bipolar Transistor), which withstands voltage excellently, low in on-voltage and capable of performing high-speed switching. Switching elements S**1**, S**2** each receive a PFM control signal at the base terminal outputted from the corresponding converter control unit. Insulation transformer TR is formed of a primary coil L**1** and a secondary coil L**2**. Diodes D**1** and D**2** constitute a rectifier circuit.

[**0082**] Each of converters **5**A-**5**D is a current resonance type soft switching PFM converter, in which switching element S**1** serves as a main switch, switching element S**2** serves as an auxiliary switch, and a resonance current generated by the leakage inductance of primary coil L**1** and

capacitor C2 is used. As described above, the switching frequency of switching elements S1, S2 is about 15 kHz-70 kHz, and an output voltage of each of converters 5A-5D is controlled to be about 330V-350V by inverter 6, which will be described later.

[0083] Referring to FIG. 2 again, inverter 6 is formed of switching elements Q1, Q2, S3, S4, a low-pass filter 7, and a link relay. 8. Switching elements Q1, Q2, S3, S4 are each constituted by, for example an IGBT, similarly to switching elements S1, S2 in each of converters 5A-5D.

[0084] Switching elements Q1, Q2 each receive a PWM (Pulse Width Modulation) signal having a switching frequency of about 19 kHz from inverter control unit 13, and turn on/off in accordance with the PWM control signal, thereby transform DC input power into an AC power synchronized with the commercial frequency.

[0085] Here, as the output voltage of inverter 6 is fixed to a constant commercial system voltage, inverter 6 changes an output current in accordance with the pulse width of the PWM control signal received from inverter control unit 13, thereby controls the input voltage, i.e., the output voltage of each of converters 5A-5D, to a constant voltage of about 330V-350V.

[0086] Switching elements S3, S4 each receive a switching signal switching to a different logic level according to the commercial frequency from inverter control unit 13, and turn on/off in accordance with the switching signal, thereby form an AC current.

[0087] Low-pass filter 7 removes noise components from the AC current in inverter 6, and shapes the waveform of the generated AC current to be a sine wave. Link relay 8 disconnects inverter 6 from commercial power system 10 when there is a malfunction.

[0088] Inverter control unit 13 receives a detection value of an input voltage of inverter 6 from voltage sensor 14E, and receives a detection value of an output current of inverter 6 from current sensor 12E. Then, inverter control unit 13 controls the pulse width of a PWM control signal so that the input voltage of inverter 6 attains about 330V-350V, and outputs that PWM control signal to each of switching elements Q1, Q2. Additionally, inverter control unit 13 outputs a switching signal switching to a different logic level according to the commercial frequency of commercial power system 10 to each of switching elements S3, S4.

[0089] FIG. 4 is an operation waveform diagram of switching elements Q1, Q2, S3, S4 in inverter 6 shown in FIG. 2.

[0090] Referring to FIG. 4, inverter control unit 13 detects an output current of a circuit constituted by switching elements Q1, Q2, S3, S4, and generates a current instruction Iref of PWM based on this output current. Then, inverter control unit 13 compares this current instruction Iref with a carrier signal Icr being generated internally. Here, this carrier signal Icr is a sawtooth wave as shown in the figure.

[0091] Inverter control unit 13 detects a voltage of commercial power system 10, and detects a zero-cross point of the system voltage. Then, inverter control unit 13 generates a switching signal for switching on/off switching elements S3, S4 alternately for every half cycle of the commercial frequency based on the detected zero-cross point, and outputs the generated switching signal to each of switching elements S3, S4.

[0092] Then, inverter control unit 13 generates a PWM control signal formed of the pulse width determined according to the comparison result between current instruction Iref and carrier signal Icr. When switching element S4 is on, inverter control unit 13 outputs the generated PWM control signal to switching element Q1, and when switching element S3 is on, inverter control unit 13 outputs the generated PWM control signal to switching element Q2.

[0093] Referring to FIG. 2 again, inverter control unit 13 further performs protection coordination control with commercial power system 10. Specifically, inverter control unit 13 monitors the system voltage or the system frequency, for example, and when any of these value attains at least a prescribed threshold value, it stops the operation of inverter apparatus 4 within a determined operation time.

[0094] Additionally, inverter control unit 13 has an islanding operation detect function as the protection coordination control. The islanding operation detect function is a function for stopping the operation of inverter apparatus 4 when great frequency fluctuations and/or voltage fluctuations due to power failure of commercial power system 10 or the like is detected during the islanding operation. As the detection scheme, the voltage-phase-jump detection scheme and the frequency shift scheme can both be employed. The former is a passive detection scheme for detecting a sudden change of the voltage phase due to imbalance of power generation output and loads when entering the islanding operation. The latter is an active detection scheme for detecting fluctuations in the frequency by, for example, normally applying a slight frequency bias to an output current.

[0095] As another protection coordination control, inverter control unit 13 has: a voltage increase suppression function for suppressing an increase in the voltage at the power receiving point of the system, which would occur by inverter apparatus 4 allowing a current to reversely flow to commercial power system 10, by decreasing an output current; a DC component flow-out prevention function for stopping inverter apparatus 4 when DC component included in an output current exceeds a prescribed threshold value; an output overcurrent detect function for stopping inverter apparatus 4 when an output current itself exceeds a prescribed threshold value, and the like.

[0096] In this inverter apparatus 4, when the supply of DC power from solar cell arrays 2A-2D to inverter apparatus 4 is started, converters 5A-5D are each actuated. Converter control units 11A-11D each increase the pulse width of a PFM control signal, thereby increase an output voltage of respective converters 5A-5D. When each of the output voltage attains about 350V, inverter 6 is actuated.

[0097] Inverter 6 transforms a DC power outputted from each of converters 5A-5D into an AC power and outputs the AC power. The AC power outputted from inverter 6 is supplied to commercial power system 10 and household loads, which are not shown, via leakage breaker 9. Additionally, inverter 6 controls an input voltage, i.e., the output voltage of each of converters 5A-5D to be about 330V-350V by increasing or decreasing the output current.

[0098] Here, as the output voltage of each converters 5A-5D is controlled by inverter 6 to be a constant voltage,

by changing the pulse width of a PFM control signal by a corresponding converter control unit, an operating point of an input voltage can be changed. Thus, converters **5**A-**5**D each changes an input voltage so that the output power from a corresponding solar cell array becomes maximum, based on the PFM control signal received from the corresponding converter control unit.

[**0099**] As described above, as for roof surfaces of a hipped roof or the like, roof surfaces facing toward the east and the west have areas generally smaller than that of a roof surface facing toward the south. Therefore, as shown in **FIGS. 1 and 2**, the proportion of converters with higher input voltage range (converters **5**A, **5**B) and converters with lower input voltage range (converters **5**C, **5**D) in inverter apparatus **4** is desirable to be 1:1 in accordance with the formation of the roof surfaces of such a hipped roof It is also possible to form each of converters **5**A-**5**D as a unit in inverter apparatus **4**, and to have a structure that can be attached or removed to/from inverter apparatus **4**. Formation of converters **5**A-**5**D as units enables such a structure of the dispersed-power-supply system that flexibly addresses to the shape of the roof or the solar radiation condition.

[**0100**] As one example, **FIG. 5** shows an overall block diagram showing another configuration of a dispersed-power-source system according to the first embodiment of the present invention.

[**0101**] Referring to **FIG. 5**, a house to which the dispersed-power-source system is installed has a roof surface facing toward the south, of which area is smaller than that of the house shown in **FIG. 1**. Accordingly, in this dispersed-power-source system, in the configuration of the dispersed-power-source system shown in **FIG. 1**, only solar cell array **2**A is arranged on the roof surface facing toward the south. Correspondingly, in inverter apparatus **4**, converter **5**B is unnecessary and therefore removed by the entire unit. Thus, by forming each of converters **5**A-**5**D as a unit, a dispersed-power-source system suitable to each house is structured, while suppressing the costs.

[**0102**] It should be noted that, while converters **5**A-**5**D have been described as DC-DC converters in the foregoing, converters **5**A-**5**D are not limited to DC-DC converters. Though the aforementioned DC-DC converter has an insulation transformer capable of insulating DC power sources and a commercial power system and excellent in safety, other converter without a transformer may be employed.

[**0103**] Further, the voltage value, the current value, the switching frequency and the like described above are examples, and other values may be employed.

[**0104**] As described above, according to the first embodiment, as an inverter apparatus including a plurality of converters having different input voltage ranges is included, it is not necessary to provide a booster circuit to the front stage of the inverter apparatus for adjustment to an input voltage range. Accordingly, costs can be suppressed and reduction of efficiency due to provision of the booster circuit will not occur.

[**0105**] Additionally, as the maximum input power is defined for each converter according to the size of a DC power source, an excessive input current can be prevented. Further, as components can be selected taking account of the maximum input power or the input voltage range of each converter, efficiency of transformation can be improved.

[**0106**] Still further, by setting the proportion of converters with higher input voltage range and converters with lower input voltage range to be 1:1, a dispersed-power-source system in which solar cell arrays as DC power sources are arranged can efficiently be structured, particularly on the roof surfaces of a hipped roof.

[**0107**] Still further, by forming each of the converters as a unit, converters with different input voltage ranges can appropriately be combined according to the system, and therefore a dispersed-power-source system addressing install conditions or usage conditions can easily be structured.

Second Embodiment

[**0108**] In a second embodiment, a dispersed-power-source system of a hybrid type in which solar cell arrays and fuel cells are used as DC power sources is shown.

[**0109**] **FIG. 6** is an overall block diagram showing a configuration of a dispersed-power-source system according to a second embodiment of the present invention.

[**0110**] Referring to **FIG. 6**, the dispersed-power-source system according to the second embodiment further includes a fuel cell **16** in the configuration of the dispersed-power-source system according to the first embodiment shown in **FIG. 1** and includes an inverter apparatus **4**A in place of inverter apparatus **4**. Inverter apparatus **4**A further includes converter **5**E in the configuration of inverter apparatus **4** shown in **FIG. 1**.

[**0111**] Fuel cell **16** outputs a DC power, and for example, an output voltage is 30V-60V, and output power is at most 1 kW. Converter **5**E receives the DC power outputted from fuel cell **16**. Converter **5**E continues control of an output voltage of fuel cell **16** so that the output power of fuel cell **16** becomes maximum, and boosts the output voltage of that fuel cell **16** to a prescribed voltage controlled by inverter **6**, and outputs the boosted voltage.

[**0112**] Here, converter **5**E is designed to have an input voltage range of 25V-65V and maximum input power value of 1.5 kW, taking account of the aforementioned output characteristics of fuel cell **16**. Accordingly, it is not necessary to provide a booster circuit between fuel cell **16**, which is lower in output voltage than solar cell arrays **2**A-**2**D, and converter **5**E.

[**0113**] Converter **5**E may also be formed as a unit, similarly to converters **5**A-**5**D, and may be formed to have a structure that can be attached or removed to/from inverter apparatus **4**A. By forming the converter as a unit, the optimum and simple dispersed-power-supply system can be structured, selecting a unit having necessary input voltage range and maximum input power value corresponding to DC power sources as appropriate.

[**0114**] It should be noted that since the rest of the configuration of the dispersed-power-source system according to the second embodiment is the same as the dispersed-power source system according to the first embodiment, description thereof is not repeated.

[**0115**] As described above, according to the second embodiment, a dispersed-power-source system of a hybrid type can easily be structured with low costs and without reduction of efficiency.

[**0116**] Although the present invention has been described and illustrated in detail, it is clearly understood that the same is by way of illustration and example only and is not to be

taken by way of limitation, the spirit and scope of the present invention being limited only by the terms of the appended claims.

What is claimed is:

1. An inverter apparatus provided between a plurality of direct current power sources and a load for transforming a direct current power received from each of said plurality of direct current power sources into an alternating current power and supplying said load with said alternating current power, comprising:

a plurality of converters each controlling an output voltage of a corresponding direct current power source so that the direct current power outputted from said corresponding direct current power source becomes maximum; and

an inverter transforming a combined direct current power obtained by combining direct current outputs from said plurality of converters into said alternating current power and outputting said alternating current power to said load, wherein

said plurality of converters include

at least one first converter respectively corresponding to at least one first direct current power source included in said plurality of direct current power sources and each having a first voltage input range, and

at least one second converter respectively corresponding to at least one second direct current power source included in said plurality of direct current power sources, being different from said at least one first direct current power source corresponding to said at least one first converter and each having a second voltage input range being different from said first voltage input range.

2. The inverter apparatus according to claim 1, wherein

a voltage level of said alternating current power is a commercial alternating current voltage, and

said inverter is further connected to a commercial power system for outputting said alternating current power to said load and/or said commercial power system.

3. The inverter apparatus according to claim 1, wherein

said at least one first converter each controls, when the direct current power received from the corresponding first direct current power source exceeds a first prescribed maximum input power value, the output voltage of the corresponding first direct current power source so that the direct current power becomes lower than said first prescribed maximum input power value, and

said at least one second converter each controls, when the direct current power received from the corresponding second direct current power source exceeds a second prescribed maximum input power value being different from said first prescribed maximum input power value, the output voltage of the corresponding second direct current power source so that the direct current power becomes lower than said second prescribed maximum input power value.

4. The inverter apparatus according to claim 1, wherein

each of the direct current power sources respectively corresponding to said at least one first and second converters is a solar battery, and

said at least one first converter is provided as many as said at least one second converter is provided.

5. The inverter apparatus according to claim 1, wherein

each of said at least one first and second converters is formed as a unit and capable of being attached and removed to and from the inverter apparatus by said unit.

6. A dispersed-power-source system, comprising:

a plurality of direct current power sources;

a load; and

a system-linked inverter apparatus provided between said plurality of direct current power sources and said load as well as a commercial power system for transforming a direct current power received from each of said plurality of direct current power sources into an alternating current power and supplying said load and/or said commercial power system with said alternating current power, wherein

said system-linked inverter apparatus includes

a plurality of converters each controlling an output voltage of a corresponding direct current power source so that the direct current power outputted from said corresponding direct current power source becomes maximum, and

an inverter transforming a combined direct current power obtained by combining direct current outputs from said plurality of converters into said alternating current power and outputting said alternating current power to said load and/or said commercial power system, wherein

said plurality of converters include

at least one first converter respectively corresponding to at least one first direct current power source included in said plurality of direct current power sources and each having a first voltage input range, and at least one second converter respectively corresponding to at least one second direct current power source included in said plurality of direct current power sources, being different from said at least one first direct current power source corresponding to said at least one first converter and each having a second voltage input range being different from said first voltage input range.

7. The dispersed-power-source system according to claim 6, wherein

said system-linked inverter apparatus further includes

a sensor detecting a malfunction in said commercial power system, and

a control circuit stopping, when said sensor detects a malfunction in said commercial power system, an operation of the system-linked inverter apparatus.

8. The dispersed-power-source system according to claim 6, wherein

said plurality of direct current power sources include different types of power generation apparatuses.

* * * * *