US 20090000654A1

(19) United States

(12) Patent Application Publication

Rotzoll et al.

(10) Pub. No.: US 2009/0000654 A1

(43) Pub. Date: Jan. 1, 2009

(54) DISTRIBUTED INVERTER AND INTELLIGENT GATEWAY

(75) Inventors: **Robert R. Rotzoll**, Cascade, CO (US); **Rajan N. Kapur**, Boulder, CO (US); **Suhas S. Patil**, Cupertino, CA (US)

Correspondence Address:
HOGAN & HARTSON LLP
ONE TABOR CENTER, SUITE 1500, 1200 SEVENTEENTH ST
DENVER, CO 80202 (US)

(73) Assignee: **Larankelo, Inc.**, Colorado Springs, CO (US)

(21) Appl. No.: **12/121,616**

(22) Filed: **May 15, 2008**

Related U.S. Application Data

(60) Provisional application No. 60/938,663, filed on May 17, 2007.

Publication Classification

(51) **Int. Cl.**
H01L 31/042 (2006.01)

(52) **U.S. Cl.** **136/244**

(57) **ABSTRACT**

A system and method for converting DC from one or more sources to AC power utilizing a novel partitioning scheme are disclosed. This partitioning scheme is particularly well suited for photovoltaic (PV) microinverter applications. The primary goals are to make installation, operation and maintenance of the system safe and simple. Secondary goals are to improve reliability and lifetime of the converter in a cost effective manner. In one embodiment, the microinverters are placed in one-to-one proximity with the photovoltaic modules, each proximate microinverter incorporating a reduced number of functions and components. Remaining common functions and controls are implemented separately.

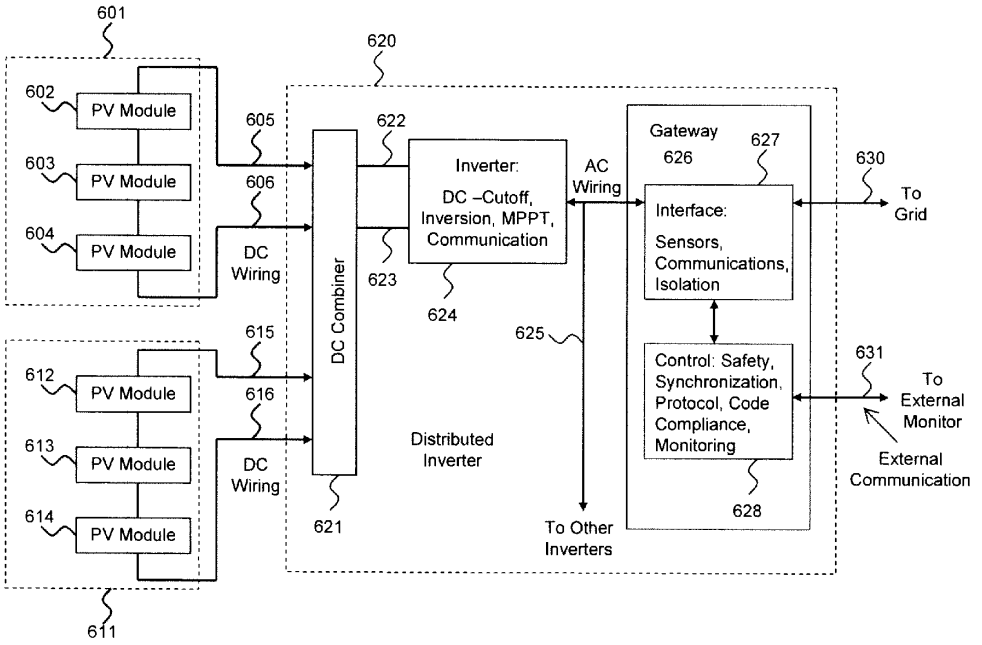

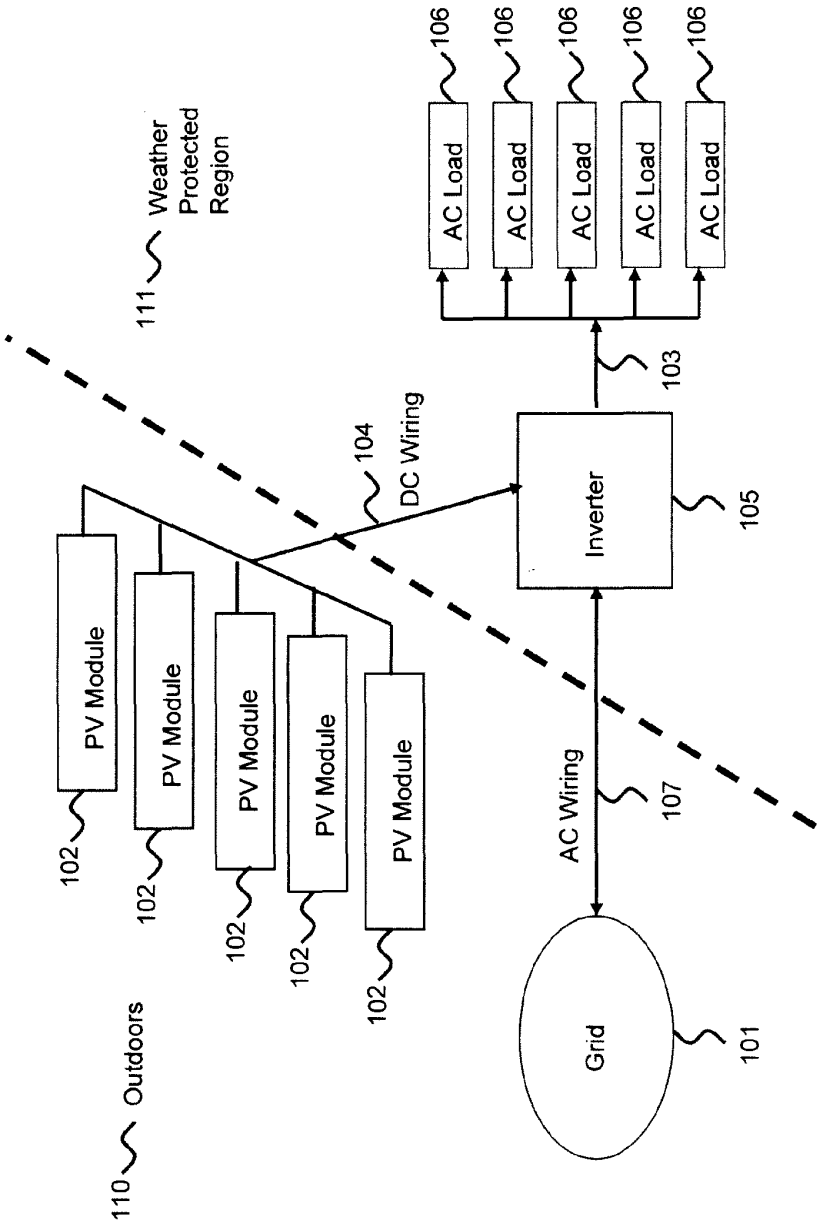

FIG. 1
RELATED ART

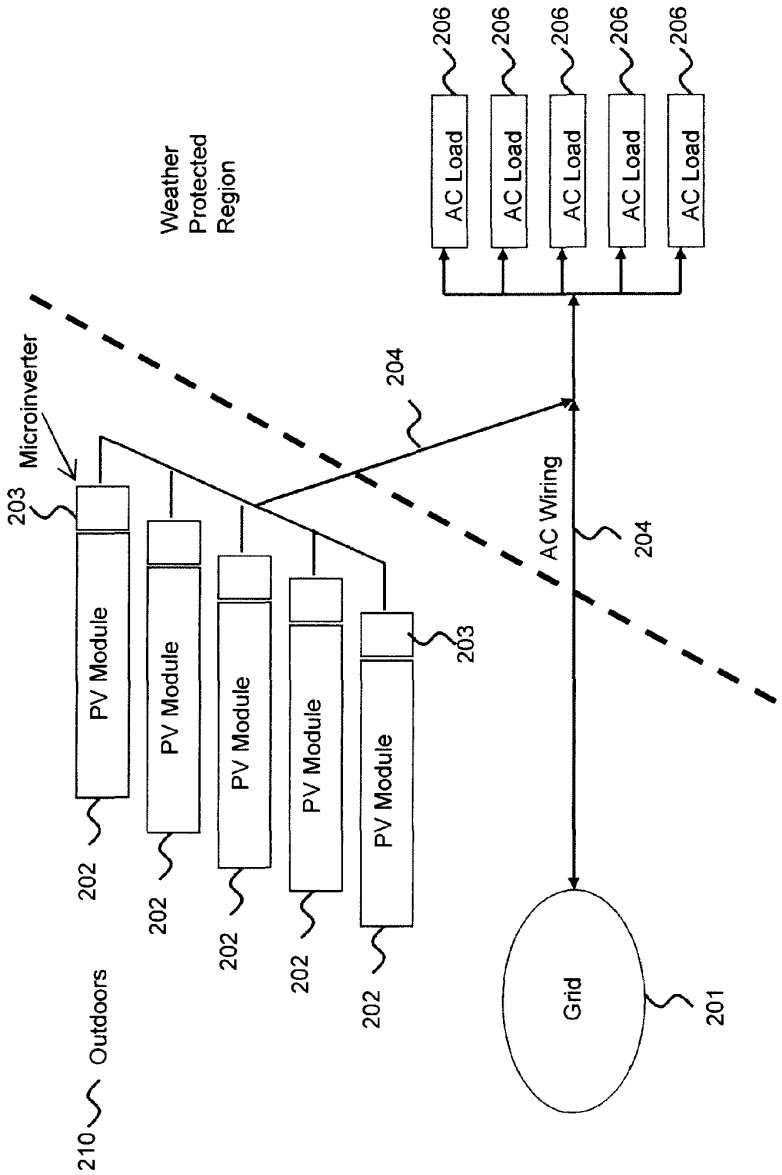

FIG. 2
RELATED ART

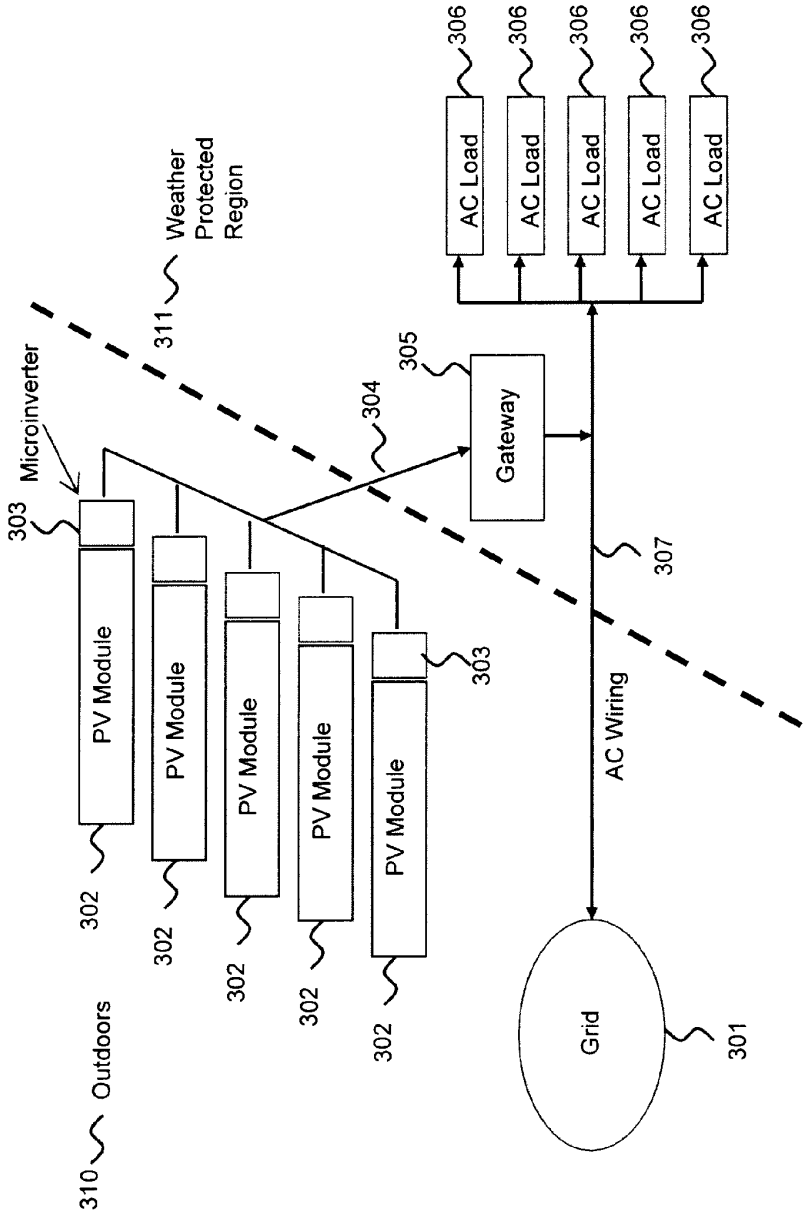
Microinverter
303
PV Module
302
PV Module
302
PV Module
302
PV Module
302
PV Module
303
Outdoors
310
Weather
Protected
Region
311
304
305
Gateway
307
AC Wiring
Grid
301
AC Load
306
AC Load
306
AC Load
306
AC Load
306
AC Load
306

FIG. 3

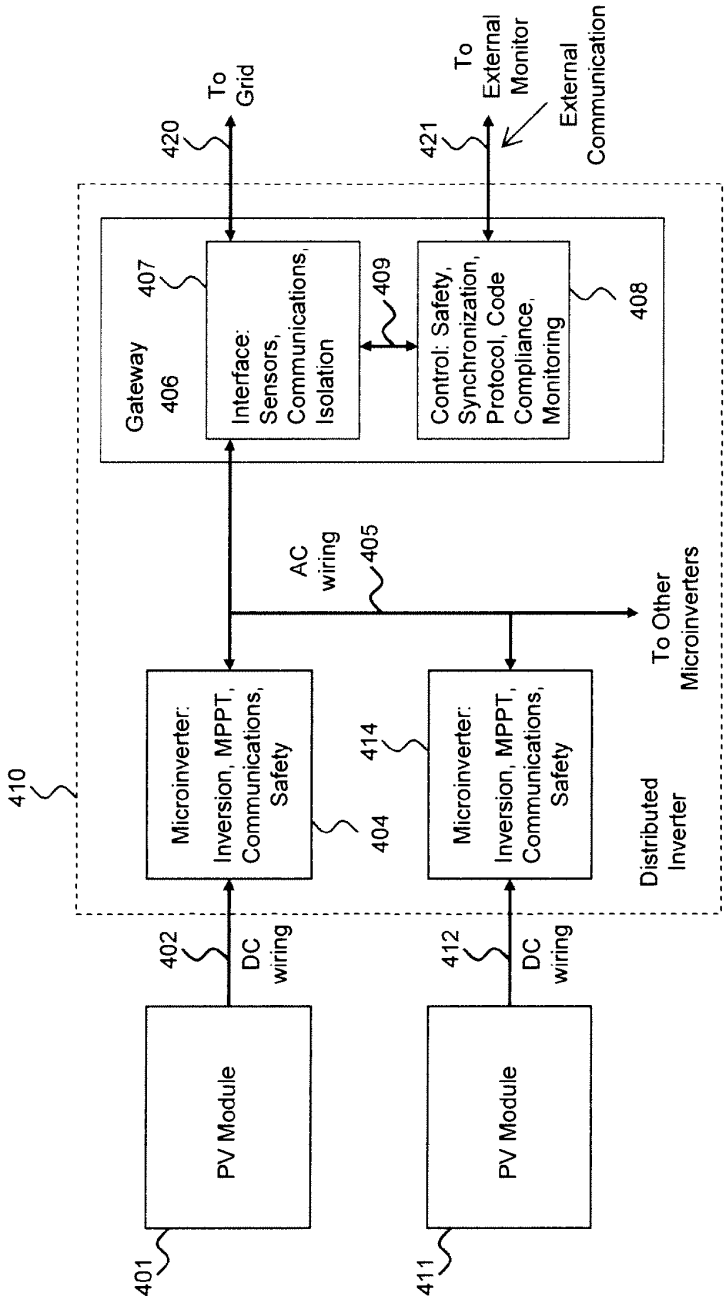
To Grid
420
To External Monitor
421
External Communication
Gateway
406
407
Interface: Sensors, Communications, Isolation
409
Control: Safety, Synchronization, Protocol, Code Compliance, Monitoring
408
AC wiring
405
To Other Microinverters
410
Microinverter: Inversion, MPPT, Communications, Safety
404
414
Microinverter: Inversion, MPPT, Communications, Safety
Distributed Inverter
402
DC wiring
412
DC wiring
PV Module
401
PV Module
411

FIG. 4

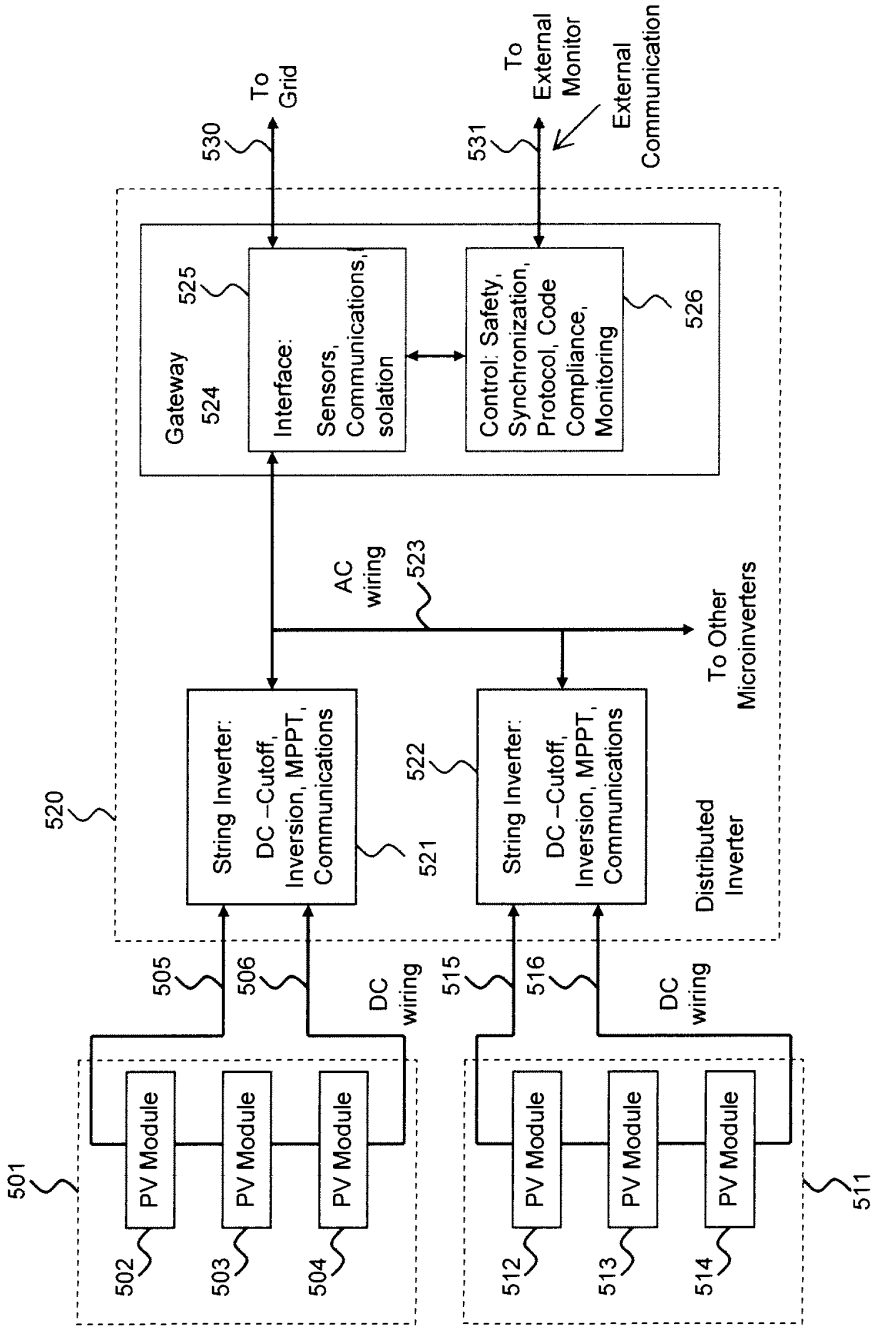
To Grid
530
To External Monitor
531
External Communication
Gateway
524
525
Interface: Sensors, Communications, solation
Control: Safety, Synchronization, Protocol, Code Compliance, Monitoring
526
AC wiring
523
To Other Microinverters
520
String Inverter: DC –Cutoff, Inversion, MPPT, Communications
521
522
Distributed Inverter
505
506
DC wiring
515
516
DC wiring
501
PV Module
502
503
504
512
513
514
511

FIG. 5

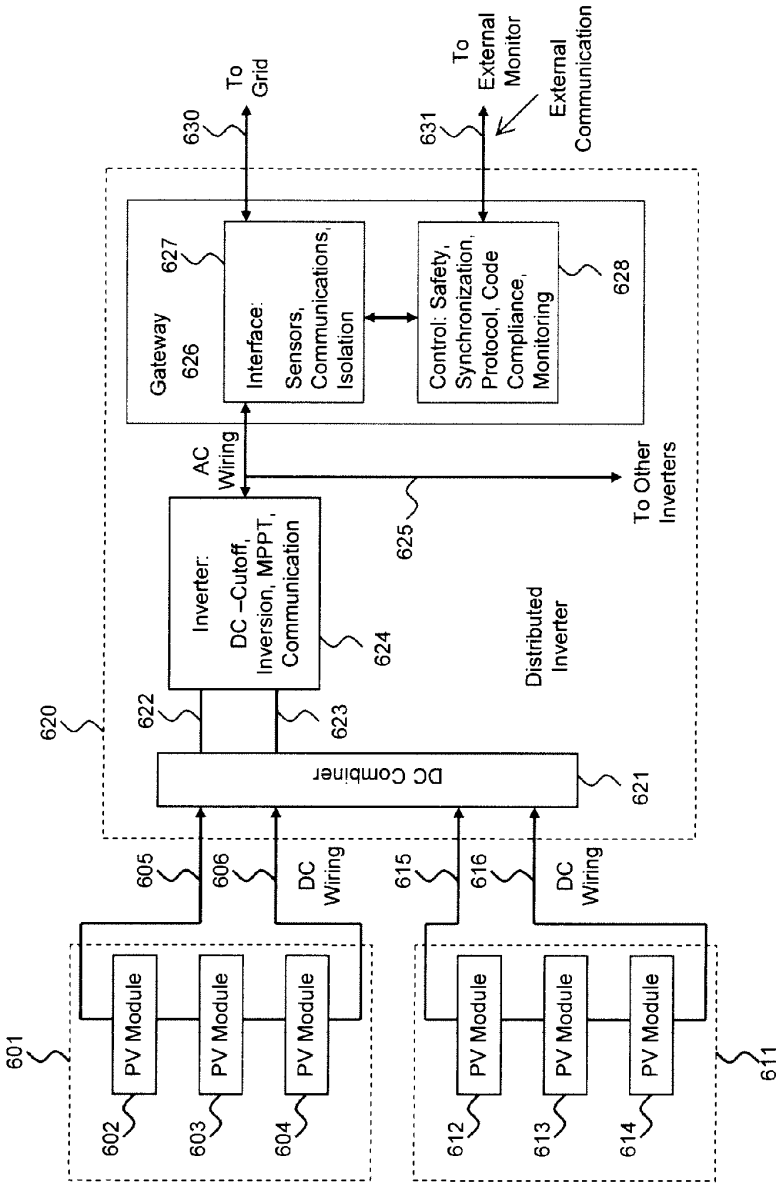
601
PV Module
PV Module
PV Module
602
603
604
605
606
DC Wiring
615
616
DC Wiring
PV Module
PV Module
PV Module
612
613
614
611
620
DC Combiner
621
622
623
Inverter: DC –Cutoff, Inversion, MPPT, Communication
624
Distributed Inverter
AC Wiring
625
To Other Inverters
Gateway 626
627
Interface: Sensors, Communications, Isolation
Control: Safety, Synchronization, Protocol, Code Compliance, Monitoring
628
630
To Grid
631
To External Monitor
External Communication

FIG. 6

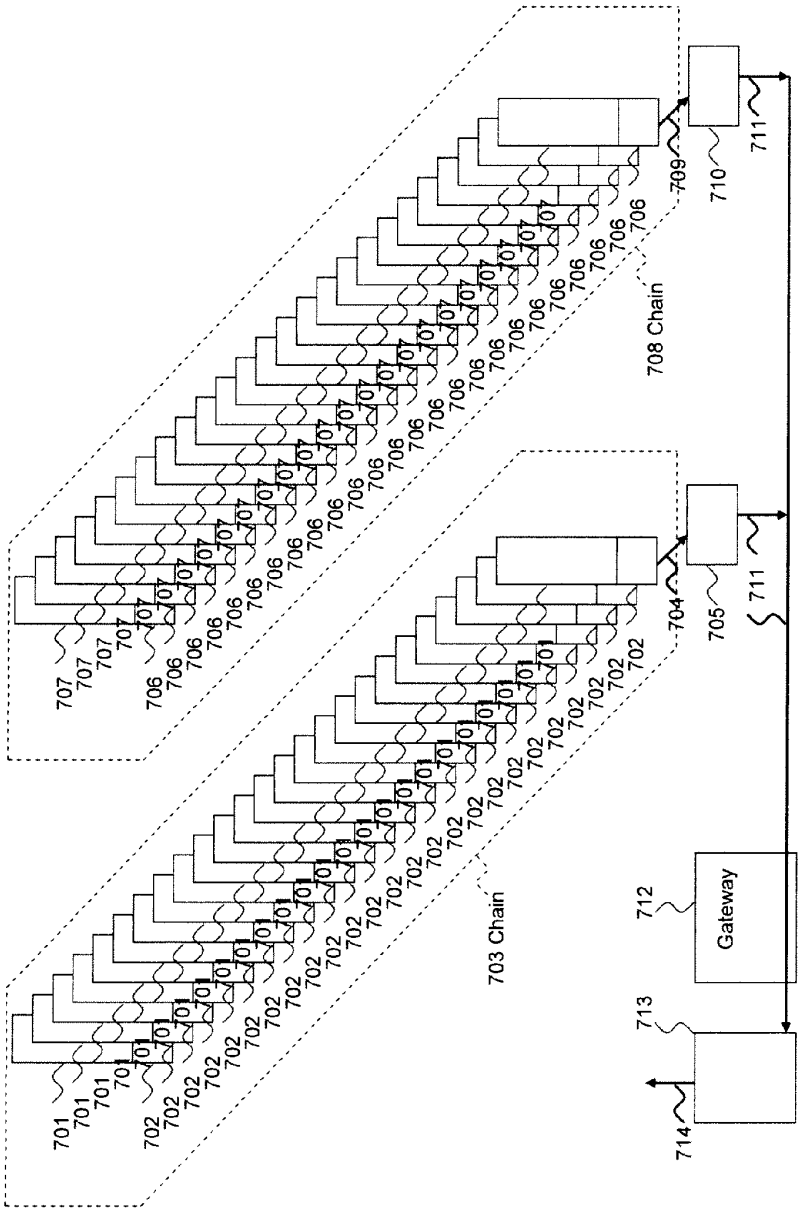
701
702
703 Chain
704
705
706
707
708 Chain
709
710
711
712
Gateway
713
714

FIG. 7

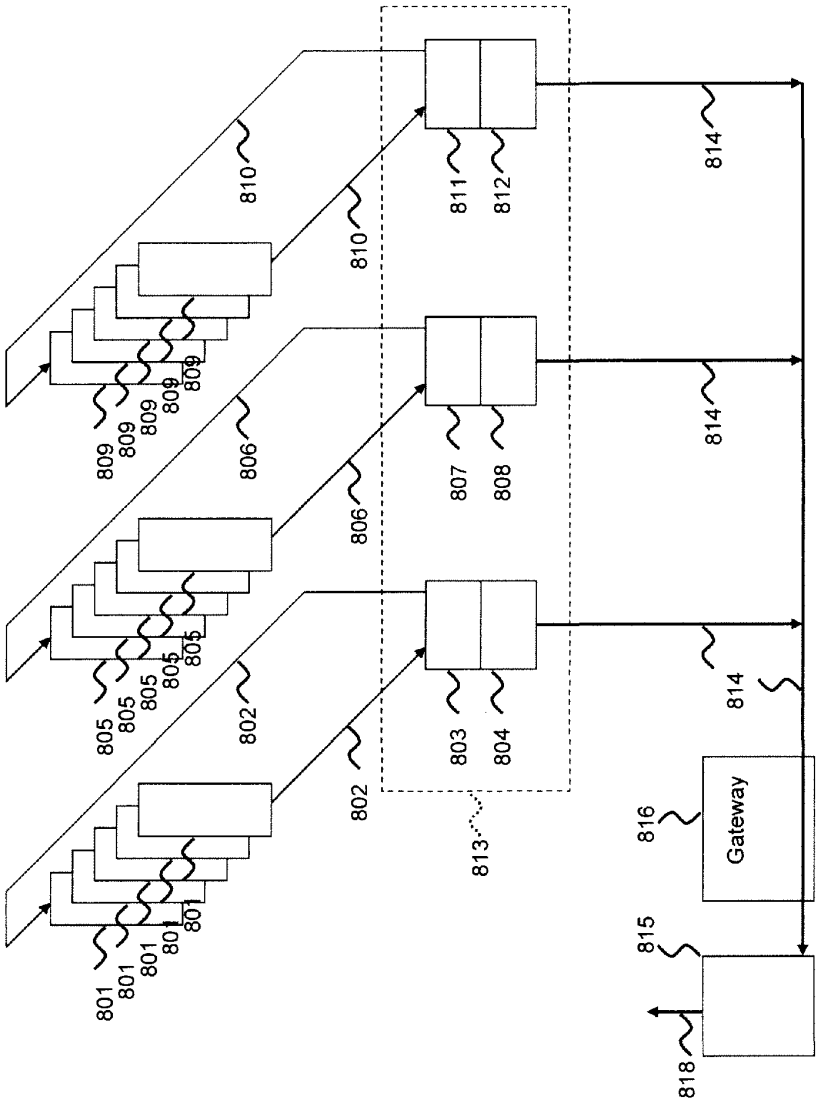
801
801
801
801
805
805
805
805
809
809
809
809
802
806
810
802
806
810
803
804
807
808
811
812
813
814
814
814
815
816
Gateway
818

FIG. 8

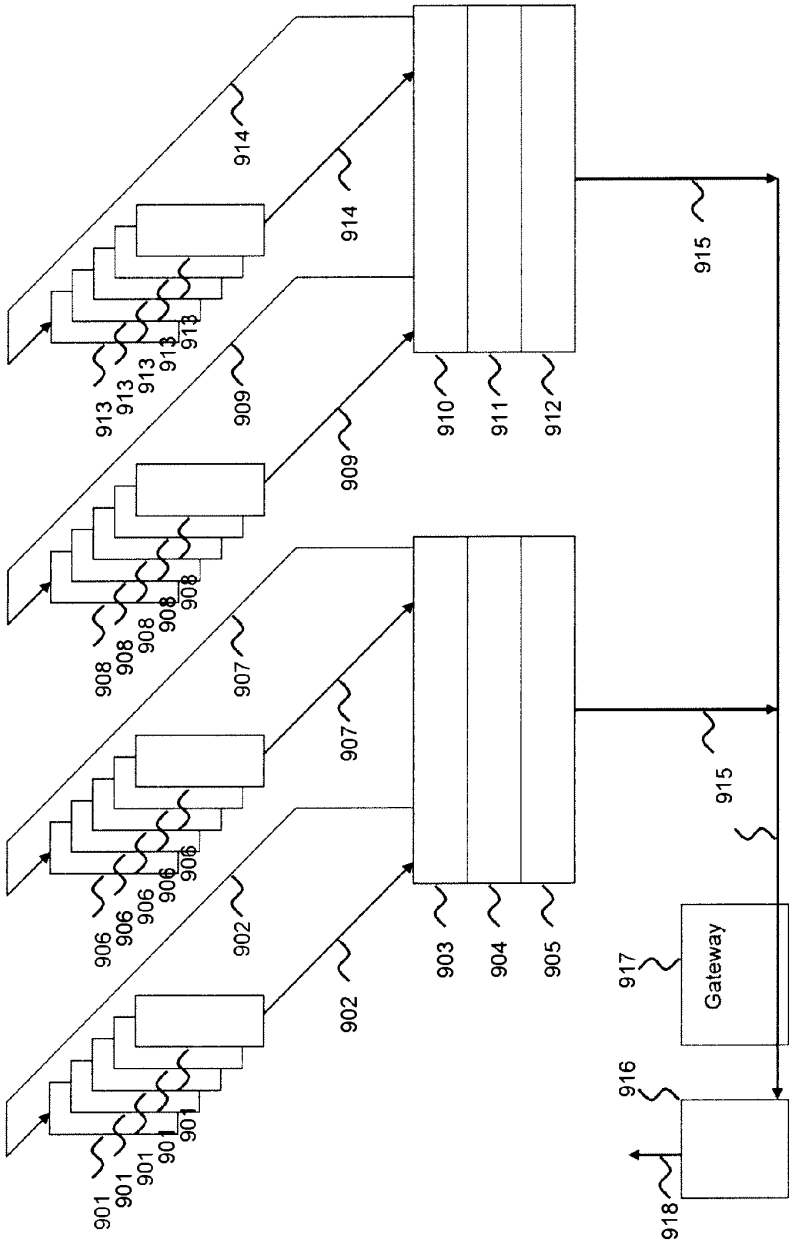
901
902
903
904
905
906
907
908
909
910
911
912
913
914
915
916
917
Gateway
918

FIG. 9

DISTRIBUTED INVERTER AND INTELLIGENT GATEWAY

[0001] The present application relates to and claims the benefit of priority to U.S. Provisional Patent Application No. 60/938,663 filed May 17, 2007, which is hereby incorporated by reference in its entirety for all purposes as if fully set forth herein. The present application is further related to co-pending U.S. patent application Ser. No. LAR004 entitled, "Photovoltaic AC Inverter Mount and Interconnect" and U.S. patent application Ser. No. LAR003 entitled "Photovoltaic Module-Mounted AC Inverter", both of which are hereby incorporated by this reference in their entirety.

BACKGROUND OF THE INVENTION

[0002] 1. Field of the Invention

[0003] The invention relates to power conversion including direct current (DC) to alternating current (AC) and, more particularly, to photovoltaic module output power conversion to AC.

[0004] 2. Discussion of the Related Art

[0005] In coming years, distributed generation of electricity is likely to become a larger and larger part of the energy sourced to utility grids. Distributed sources of electrical energy such as solar photovoltaic modules, batteries, fuel cells and others generate direct current (DC) power, which must be converted to alternating current (AC) power for transmission and usage in residential and commercial settings.

[0006] Also, as distributed generation increases, the utility grid, commonly known as the "grid," will be transformed to a still to be defined smart-grid that will support increased coordination between multiple generators and multiple loads. "Grid tied" photovoltaic systems are the most common form of solar electric systems today and they use a form of coordination called net-metering.

[0007] The larger number of photovoltaic installations are residential having an average capacity of about 2-3 kW. The bulk of new generating capacity is being installed in commercial buildings and utility scale installations. Residential systems commonly utilize single phase AC, while commercial systems most often use three phase AC.

[0008] Residential rooftops present a special challenge for the placement and interconnection of photovoltaic modules, due to the presence of gables, multiple roof angles, and other such obstructions. Such rooftops often do not expose a sufficiently large, commonly directed surface to the sun for photovoltaic modules to be positioned to harvest maximum power. Currently, conventional inverter-based interconnections are optimized to minimize IR (current times resistance) loss. This is referred to as string design. The inverters perform a function called maximum power point tracking (MPPT) on strings of PV modules. The MPPT process evaluates the PV module string output current-voltage curve on a continuous or sampled basis to determine the correct load voltage thus maximizing the string output power calculated as the string output voltage times current. Due to the nature of residential rooftops, the string design results in MPPT performance at the levels of the least power producing modules in the photovoltaic (PV) array. This degrades the AC power harvest from the entire array.

[0009] The use of microinverters in a one-to-one configuration with the PV modules removes the string design challenge, thereby enabling each PV module to produce current at its full capacity and truly permits MPPT at a per PV module level. The one-to-one arrangement of microinverters and PV modules is also referred to as AC PV modules in related art.

[0010] Commercial buildings and larger installations present slightly different challenges. In commercial buildings, large, commonly directed surfaces are generally available, but even then, obstructions, such as HVAC components must be dealt with as the components may block solar radiation. String design and MPPT also continue to be of concern. Additionally, since such installations often consist of thousands of PV modules, monitoring, operation and maintenance can be time consuming and expensive.

[0011] The use of AC PV modules for commercial installations simplifies string design, improves AC power harvest and provides the ability to remotely monitor the entire PV array on a module by module basis. A multiphase microinverter has the additional advantage of delivering substantially balanced multiphase AC power.

[0012] The benefits of microinverters have been documented in related art dating back almost three decades. Yet, the use of microinverters continues to be negligible due to their inferior reliability and efficiency as well as their high cost as compared to conventional inverters.

[0013] Typically, PV modules are placed in hostile outdoor environments in order to gain maximum exposure to solar radiation. Microinverters must be placed in proximity to the PV modules to realize their full benefits. Conventional inverters are typically placed in more benign environments, often indoors, e.g., on a protected wall or in a utility closet.

[0014] When microinverters are placed in proximity to PV modules, the hostile outdoor environment exacerbates the design challenge for achieving high reliability, high efficiency and low cost. Similarly, servicing and replacing microinverters on a rooftop is potentially more challenging and labor intensive than servicing and replacing centralized inverters.

[0015] The related art design approach for microinverters has been to implement them as miniaturized versions of conventional inverters, incorporating all the functions and components that were used in conventional inverters. Early versions of related art for microinverters utilized electrolytic capacitors, having a lifespan susceptible to degradation at high temperatures. Other versions of related art microinverters eliminate the electrolytic capacitor, thereby improving the lifespan.

[0016] FIG. **1** shows a simplified diagram of a related art grid tied photovoltaic system utilizing a conventional inverter. Referring to FIG. **1**, PV modules **102** are mounted outdoors **110** for direct access to solar radiation and connected to a conventional inverter **105** using DC wiring **104**. Both inverter **105** and DC wiring **104** are located in a weather protected region **111** such as the interior of a structure. The inverter **105** output feeds local AC loads **106** through AC wiring **103**. The inverter's output is also tied for bi-directional flow of energy for net-metering to the utility grid **101** through exterior AC wiring **107**.

[0017] FIG. **2** shows a simplified diagram of a related art grid tied photovoltaic system including microinverters. Referring to FIG. **2**, PV modules **202** are mounted outdoors **210** for direct access to solar radiation. Microinverters **203** are electrically coupled in one-to-one proximity to the PV modules **202** (typically under them) and convert individual PV

module DC outputs to AC power which is then fed to AC wiring **204**. The AC wiring **204** feeds local loads **206** and the utility grid **201**.

[0018] A problem with the related art microinverters is that they either collocate all inverter functions including safety and code compliance within the microinverter or they do not address how these functions are to be implemented, thereby making the design for high reliability and long life difficult and expensive. The collocation may also require redevelopment and replacement of the microinverter when code compliance requirements change.

SUMMARY OF THE INVENTION

[0019] Accordingly, the invention is directed to a distributed inverter and intelligent gateway that substantially obviates one or more of the problems due to limitations and disadvantages of the related art.

[0020] An advantage of the invention is to provide a system and method of installation, operation, and maintenance of the a power conversion system that is simple and safe.

[0021] Another advantage of the invention is to provide a high degree of reliability and a long lifetime to the microinverter.

[0022] Yet another advantage of the invention is to provide upgradeability of the system during the lifetime of the system.

[0023] Additional features and advantages of the invention will be set forth in the description which follows, and in part will be apparent from the description, or may be learned by practice of the invention. The features of the invention will be realized and attained by the structure particularly pointed out in the written description and claims hereof as well as the appended drawings.

[0024] To achieve these and other advantages and in accordance with the purpose of the invention, an embodiment of the invention is directed towards a system for transforming energy. The system for transforming energy includes a plurality of photovoltaic modules. The plurality of microinverters are electrically coupled to the photovoltaic modules in a one-to-one relationship. The system also includes a gateway electrically coupled to the plurality of microinverters and features of the gateway are capable of being upgraded with at least one of hardware, software, and firmware.

[0025] In another aspect of the invention, an embodiment of the invention includes a gateway for use in a system for use in an energy generating system. The gateway includes an interface unit for interfacing with a plurality of microinverters and a utility grid. The gateway also includes a control unit electrically coupled to the interface unit for controlling at least one of safety functionality, synchronization functionality to synchronize the plurality of microinverters to the utility grid, and monitoring functionality to monitor the plurality of microinverters and the utility grid. The control unit is capable of being electrically coupled to an external monitor. In yet another aspect of the invention, an embodiment of the invention includes a photovoltaic system for transforming radiant energy into alternating current. The photovoltaic system includes a plurality of photovoltaic modules and a plurality of microinverters coupled to the photovoltaic modules in a one-to-one relationship. Each of the plurality of microinverters includes an inversion unit, a MPPT unit, a communications unit, a safety unit, an interface unit and a control unit. The inversion unit converts DC into AC and the MPPT unit optimizes power from the plurality photovoltaic modules. The communications unit provides communications to the gateway. The safety unit provides safety functions. In addition, a gateway is coupled to the plurality of microinverters. The gateway includes an interface unit and a control unit. The interface unit interfaces with a plurality of microinverters and a utility grid. The control unit is coupled to the interface unit for controlling at least one of safety functionality, synchronization to synchronize the plurality of microinverters to the utility grid and monitoring where the control unit is capable of being coupled to an external monitor.

[0026] It is to be understood that both the foregoing general description and the following detailed description are exemplary and explanatory and are intended to provide further explanation of the invention as claimed.

BRIEF DESCRIPTION OF THE DRAWINGS

[0027] The accompanying drawings, which are included to provide a further understanding of the invention and are incorporated in and constitute a part of this specification, illustrate embodiments of the invention and, together with the description, serve to explain the principles of the invention.

[0028] In the drawings:

[0029] FIG. **1** is a diagram of a related art grid tied photovoltaic system using a conventional centralized inverter;

[0030] FIG. **2** is a diagram of a related art grid tied photovoltaic system using conventional microinverters;

[0031] FIG. **3** is a diagram of a grid tied photovoltaic system using distributed converters including microinverters and a gateway according to an embodiment of the invention;

[0032] FIG. **4** is a block diagram of a distributed converter utilizing microinverters according to another embodiment of the invention;

[0033] FIG. **5** is a block diagram of a distributed converter utilizing string inverters according to another embodiment of the invention;

[0034] FIG. **6** is a block diagram of a distributed converter utilizing centralized inverters according to another embodiment of the invention;

[0035] FIG. **7** is a block diagram of a PV system utilizing microinverters according to another embodiment of the invention;

[0036] FIG. **8** is a block diagram of a PV system utilizing multiple string inverters according to another embodiment of the invention; and

[0037] FIG. **9** is a block diagram of a PV system utilizing centralized inverters according to another embodiment of the invention.

DETAILED DESCRIPTION OF THE ILLUSTRATED EMBODIMENTS

[0038] Embodiments of the invention include a novel approach whereby only those functions and components that are necessary to achieve the advantages of microinverters are placed in assemblies in proximity to the PV modules and other functions including, for example, system control, are located elsewhere. This separation of functions and components is termed portioning. The control and coordination of the system is performed without additional wiring. Communications may occur via powerline, wired and/or wireless channels. Disabling the communications channel provides a way for turning the microinverters off thereby facilitating inverter or PV module replacement, maintenance or other desired tasks. Moreover, the partitioning provides for enhanced safety as compared to the related art. In the related

art, in the presence of solar radiation, the PV module outputs are always enabled and are thus capable of electrocuting the installer. Accordingly, embodiments of the invention provide for safer and simpler installation and maintenance procedures.

[0039] In addition, the partitioning reduces the number and type of components placed in the PV module proximate assemblies that are subject to the hostile outdoors environment, such as temperature. Fewer components and simplified assembly also result in improved reliability and increased system lifetime. Cost is reduced by eliminating common system functions from the microinverter. In embodiments of the invention where these functions are realized with cheaper or less robust components located in a less hostile environment, the cost may also be further reduced.

[0040] In some embodiments, the partitioning may include physically locating programmable functions in an area distinct from the PV module assemblies, such as, in a gateway. Accordingly, the features located in the gateway are decoupled or portioned from the PV module assemblies. The functions and components in the gateway may be upgraded over the lifetime of the system. Therefore, the development cycle of the gateway is decoupled from the development cycle of the microinverter assemblies coupled to the PV module assemblies, and thus several generations of gateways having different value added functions can be developed for use with the same microinverter assemblies. This leads to an upgradeable system at a significantly reduced cost as compared to the related art.

[0041] Reference will now be made in detail to embodiments of the invention, examples of which are illustrated in the accompanying drawings.

[0042] FIG. **3** is a diagram of a grid tied photovoltaic system using distributed converters including microinverters and a gateway according to an embodiment of the invention. The grid tied photovoltaic system includes a plurality of PV modules **302** mounted outdoors **310** each coupled electrically and mechanically to microinverter assemblies **303**. In this embodiment, the gateway **305** is located in a weather protected environment **311**, e.g., indoors, for accessibility and protection from the elements. However, the gateway **305** could be located in an outdoor environment or other location. The gateway **305** receives AC current from the plurality of microinverters **303** via a first AC wiring **304**. The gateway **305** is connected to the grid **301** and to local loads **306** via a second AC wiring **307**. The loads **306** are thereby always connected to the grid **301**. The gateway **305** provides a point of measurement of the AC performance of the PV system and also the electrical behavior of the grid **301**. The gateway **305** also provides control and monitoring of the microinverters **303**.

[0043] FIG. **4** is a block diagram of a distributed converter according to another embodiment of the invention. Referring to FIG. **4**, a system for transforming energy includes a first photovoltaic module **401** and a second photovoltaic module **411** coupled to a distributed inverter **410** with DC wiring **402**, **412**. The distributed inverter **410** is functionally partitioned into a gateway **406** and a first microinverter **404** and a second microinverter **414**. The first PV module **401** connects to the first microinverter **404** via first DC wiring **402** and the second PV module **411** connects to the second microinverter **414** via second DC wiring **412**. Additional PV modules can be connected via independent DC wires to associated additional microinverters.

[0044] The AC output of all microinverters is connected in parallel via AC wiring **405** to the gateway **406**. The gateway **406** includes an interface unit **407** and a control unit **408**. The interface unit **407** is connect to the control unit **408** via interface wiring **409**. The interface unit connects to the utility grid via AC power wiring **420**. The control unit connects to an external monitor via data communications wiring **421** or via a wireless data communications channel.

[0045] The first and second microinverters **404**, **414** include a power inversion unit, a maximum power point tracking (MPPT) unit, a communications unit and a safety unit. The power inversion unit converts DC power from the associated PV module to AC power. The AC power may be generated in single-phase or multi-phase form. The MPPT unit detects the output power of the associated PV module and adjusts the load voltage presented to the PV module in such a way as to maximize the power available from the PV module. The MPPT unit and functionality are described by Hussein K. H., Mutta I., Hoshino T. and Osakada M., in "Maximum photovoltaic power tracking: An algorithm for rapidly changing atmospheric conditions", IEE Proceedings, Generation, Transmission and Distribution, Vol. 142, No. 1, January 1995, which is hereby incorporated by reference as if fully set forth herein. The communications unit provides bi-directional data communications between the microinverter **404**, **414** and the gateway **406**. Data communications from the gateway **406** to the microinverter **404**, **414** includes, for example, power conversion control, status requests, fail-safe shutdown operation and other relevant data operations. Data communications from the microinverter **404**, **414** to the gateway **406** includes PV module DC output voltage and current data, microinverter AC output voltage and current data, microinverter operational status and other relevant data.

[0046] The safety unit establishes conditions to enable or disable current flow from the PV module **401**, **411** to the microinverter **404**, **414** and from the microinverter **404**, **414** to the gateway **406**. One safety function of the safety unit is to establish that the utility grid voltage available at the AC wiring **405** is within specifications to allow the inverter to safely drive the grid. If the appropriate grid voltage specifications are met, then the safety unit enables both input and output current through the microinverter **404**, **414**. This first function is also performed by the gateway **407** and the function is secondary within the microinverter **404**, **414** as a backup fail-safe system in case of failure of the primary safety function of gateway **406**.

[0047] Another safety function of the safety unit is to test for a communications signal from the gateway **406** indicating that the grid is safe to drive with AC output current. If the gateway were disabled by any means, the communications signal emitted by the gateway **406** would be disabled. The safety unit detects this condition and immediately disables all current flow into and out of the microinverter **404**, **414**. The communications signal from the gateway **406** is termed a "heartbeat" and provides a primary fail-safe mechanism for disabling PV system AC and DC power flow in the event of a grid failure, fire or other safety hazard.

[0048] Yet another safety function of the safety unit is to support removal and re-attachment of a the microinverter **404**, **414** while the entire PV system is enabled. This is termed a hot-swap and requires that the microinverter **404**, **414** shut down upon detection of the removal or reattachment of the microinverter to suppress any arcs or high voltages that may develop at the microinverter DC wiring **402**, **412** or AC wiring

405 terminals. High voltages at the microinverter terminals are suppressed as a means to insure that maintenance personnel are not able to contact the exposed terminals while they are energized. The microinverter **404**, **414** shuts down if either the AC output voltage at AC wiring **405** does not meet prescribed conditions, such as a disconnect or grid failure, or if the PV module DC input voltage at DC wiring **402**, **412** appears to be disconnected.

[0049] The gateway **406** acts as master controller in the distributed inverter **410** by performing functions such as providing the above described heartbeat to the microinverters, monitoring their output, monitoring the grid and other related functions. The gateway **407** can turn off the heartbeat when, for example, the gateway detects a fault or unsafe conditions in the environment, maintenance is to be performed, an AC power failure occurs and/or other related operating conditions. Similarly, if the gateway **406** is physically absent, the heartbeat is thereby also absent, resulting in the disabling of the microinverters.

[0050] The communication between the gateway **406** and the microinverters **404**, **414** may be performed over the AC wiring **405**, wirelessly, or by other suitable means such as independent wiring. Both communication over AC wiring and wireless communication have the advantage that no additional wiring is required beyond that to support the transfer of AC power in the system. In the case of communication over the AC wiring **405** a wireline modulator/demodulator subfunction included within both the gateway **406** and the microinverters **404**, **414** to perform the communication functions utilizing the AC wiring **405**.

[0051] In this embodiment, the gateway **406** functions are split into an interface unit **407** and a control unit **408**. The interface unit **407** includes a sensor unit, a communications unit and an isolation unit. The sensor unit provides a way to dynamically monitor grid conditions, for example to dynamically measure grid AC voltage, current, frequency, phase and other related grid signal characteristics. In addition, the communications unit **408** provides means to send and receive data from connected microinverters **404**, **414**. The isolation unit **407** substantially prevents data communications between the microinverters **404**, **414** and the gateway **406** from appearing at the grid wiring **420** or onto the grid. Similarly, noise and other signals, with the exception of the desired grid AC power voltage and current, are substantially prevented from appearing at the AC wiring **405** between the microinverters **404**, **414** and the gateway **406**.

[0052] The control unit **408** provides monitoring and control functions to monitor the microinverters **404**, **414**. Some of the control includes controlling at least safety functionality and synchronization functionality to synchronize the microinverters **404**, **414** to the grid and monitoring functionality to monitor the microinverters **404**, **414** and the utility grid. In addition, the control unit **408** provides grid synchronization, communications protocols, grid connection performance compliance and system monitoring. The control unit can be implemented with a computer or microcontroller.

[0053] In this embodiment, software and firmware run on the control unit **408** to implement functions such as generating the heartbeat, monitoring the microinverters, monitoring the grid and monitoring any AC loads. Using the previously described communications system the control unit **408** can address each microinverter **404**, **414** individually, in subsets, or as an entire ensemble.

[0054] For example in one embodiment, the control unit **408** provides synchronization signals for matching the frequency and phase of the microinverter **404**, **414** AC output to the grid AC power. The heartbeat fail-safe is also implemented in the control unit **408**. Other functions may include monitoring the health and productivity of each microinverter and each PV module.

[0055] The control unit **408** also performs grid related protocols such as detection of grid failure, anti-islanding detection, adjustment of parameters utilized in the anti-islanding detection and related functions. New grid related protocols will be defined to implement a future smart-grid in which the grid operator may enable, disable or modify the control system of a grid-connected PV system. The control unit **408** is constructed with flexible hardware, software and firmware to adapt to future grid-defined control and communications protocols, without requiring changes to the microinverters **404**, **414**.

[0056] The gateway **406** as a whole can also be upgraded to support future system requirements by changing the hardware, software or firmware while utilizing the same microinverters **404**, **414**. For the grid connection **420** of the gateway **406**, the control unit **408** can perform load management functions, as directed through the grid protocol or other external sources. Related art monitoring and display functions can also be implemented in the control unit **408**.

[0057] The wiring **409** carries all data between the interface unit **407** and the control unit **408**. External communications to the gateway **406** from an external monitor occurs via communications wiring **421**, or other communications means such as wireless communications. This is used to externally monitor and control operation of the gateway **406** and allows for system remote control via internet connection or other remote communications means.

[0058] By reducing the functions performed within the microinverter **404**, **414** a reduction in the required microinverter complexity is achieved, thereby leading to simpler implementation of the microinverter and increased reliability, increased lifetime, and reduced cost as compared to the related art. In particular, the elimination from the microinverter of precision grid signal measurement requirements to support anti-islanding functionality for grid connection specification compliance as defined, for example, by IEEE standard IEEE-1547, eliminates considerable complexity, expense and lifetime limiting components from the microinverter.

[0059] IEEE standard IEEE-1547, and related standards used throughout the world, defined a narrow set of circumstances upon which the grid is driven by the inverter. If a break in the grid wiring occurs, an inverter could continue driving power into the un-connected branch of the grid. This region in which the primary grid generators no longer apply power is termed an island. The inverter is required by the IEEE-1547 standard to disable its output power under such conditions so as not to drive the island in the grid for both safety and technical reasons. This is known as anti-islanding. The gateway **406** assumes the primary role in detecting the defined islanding condition and communicates the associated inverter shut-down command to the microinverters **401**, **411** to implement the anti-islanding function. Example grid conditions for an anti-islanding shutdown are a very high grid voltage, a low grid voltage, a high grid frequency, a low grid frequency or a significant variation in grid impedance. The grid is usually of

low impedance, therefore the usual grid impedance variation is an increase when the island occurs.

[0060] The system of FIG. **4** can also be used to convert power for primary or secondary power sources other than PV modules **401**, **411** such as wind turbines, fuel cells, batteries, and other power sources.

[0061] FIG. **5** is a block diagram of a PV system according to another embodiment of the invention. A first PV module string **501** includes a first PV module **502**, a second PV module **503** and a third PV module **504** that are connected in series. A first output DC wire **505** and a second DC output wire **506** from the PV module string **501** are connected to a first string inverter **521**. A second PV module string **511** includes a fourth PV module **512**, a fifth PV module **513** and a sixth PV module **514** that are connected in series. A third output DC wire **515** and a fourth DC output wire **516** from the PV module string **511** are connected to a second string inverter **522**. The AC outputs of the first string inverter **521** and second string inverter **522** are connected in parallel via AC wiring **523** to the gateway **524**. The PV module strings **501**, **511** may include any number of PV modules that are series connected. Any number of PV module strings may be used in conjunction with associated string inverters in this system.

[0062] PV module strings **501**, **511** are not required to include equal numbers of PV modules **502**, **503**, **504**, **512**, **513**, **514** as is the case in related art. This provides the benefit of a simple string design in which the string DC output voltages are not required to be matched between strings **501**, **511**. Moreover, MPPT may be performed on a per string basis, so one string does not degrade the performance of another, as is the case with related art where equal length strings are connected in parallel. This arrangement has the potential to provide greater AC power harvest than conventional inverters, but less AC power harvest than microinverters.

[0063] A distributed inverter **520** is functionally portioned into a gateway **524** and string inverters **521**, **522**. The functions of the gateway **524** in this embodiment are the same as the functions of the gateway **406** as described herein. The gateway **524** includes an interface unit **525** and a control unit **526**, both of which are the same as described with reference to FIG. **4** herein. Accordingly, the benefits of partitioning the gateway **524** from the multiple-string inverters **521**, **522** in FIG. **5** are substantially similar to the benefits of partitioning the gateway **406** from the microinverters **404**, **414** in FIG. **4**. For example, the benefits include using a heartbeat for safety and independent upgradeability of the gateway from that of the string inverters. In this embodiment, the multiple-string inverters **521**, **522** are placed close to the gateway and away from the hostile outdoors environment. The AC output of all string inverters **521**, **522** are connected to the gateway in parallel via AC power wiring **523**. The gateway **524** is connected to the grid via wiring **530**. External communications to the gateway **524** from an external monitor occurs via communications wiring **531**, or other communications means such as wireless communications. This is used to externally monitor and control operation of the gateway **524** and allows for system remote control via internet connection or other remote communications means.

[0064] FIG. **6** is a block diagram of a PV system according to another embodiment of the invention. A first PV module string **601** includes a first PV module **602**, a second PV module **603** and a third PV module **604** that are connected in series. A first output DC wire **605** and a second DC output wire **606** from the PV module string **601** are connected to the DC combiner **621**. A second PV module string **611** includes a fourth PV module **612**, a fifth PV module **613** and a sixth PV module **614** that are connected in series. A third output DC wire **615** and a fourth DC output wire **616** from the PV module string **611** are connected to the DC combiner **621**.

[0065] A first DC output **622** and a second DC output **623** from the DC combiner connects to the DC inputs of an inverter **624**. The AC outputs of the inverter **624** are connected in parallel to other inverters via AC wiring **625** to the gateway **626**. The PV module strings **601**, **611** can include any number of PV modules that are connected in series. Any number of PV module strings can be used in conjunction with associated DC combiners. A plurality of inverters **624** may be used with outputs connected in parallel in the system.

[0066] In this embodiment, the PV module strings **601**, **611** must be of equal length when connected to a common DC combiner **621**. This scheme is consistent with connection of conventional inverters as known to one of ordinary skill in the art. The AC output of the inverter **624** is connected to the gateway **626** in parallel via AC power wiring **625**.

[0067] In addition, the inverter **624** is similar to conventional inverters as known to one of ordinary skill in the art except that control functions are implemented in a gateway **626** rather than within the inverters. The functions of the gateway **626** in this embodiment are substantially similar to its functions in the embodiment shown in FIG. **4**. The gateway **626** includes an interface unit **627** and a control unit **628**, both of which are the same as discussed with reference to FIG. **4** herein. Accordingly, the development cycles of the inverters and controllers can be decoupled with improved system performance and the ability to upgrade without changing the inverters. The gateway **626** is connected to the grid via wiring **630**. External communications to the gateway **626** from an external monitor occurs via communications wiring **631**, or other communications means such as wireless communications. This is used to externally monitor and control operation of the gateway **626** and allows for system remote control via internet connection or other remote communications means.

[0068] FIG. **7** is a block diagram showing a PV system according to another embodiment of the invention. Referring to FIG. **7**, a distributed inverter including a gateway **712** based on the concepts embodied in FIG. **4**. The gateway **712** includes an interface unit **727** and a control unit **728**, both of which are the same as discussed with reference to FIG. **4** herein.

[0069] PV modules **701** are individually coupled to microinverters **702** on a first chain **703**, and PV modules **707** are individually coupled to microinverters **706** on a second chain **708**. The outputs of the microinverters **702** are connected in parallel to each other and, through AC wire **704**, to an AC circuit breaker **705**, and on to AC wiring **711**. The outputs of the microinverters **706** are connected in parallel to each other and, through AC wire **709**, to an AC circuit breaker **710** and on to AC wiring **711**.

[0070] The AC wiring **711** is connected to the gateway **712**, AC cutoff **713**, and to the grid through AC wiring **714**. Note that components and wiring **704**, wiring **711**, wiring **710**, AC cutoff **713** and wiring **714** are conventional AC electrical components and their selection and installation is consistent with the understanding of one of ordinary skill in the art.

[0071] FIG. **7** illustrates the scalability of installation using distributed inverters. The concept of hierarchical or replicated gateways suggests itself for much larger capacity systems, as

does the concept of additional chains to the same gateway **712**. Without loss of generality, the output of the microinverters can be single-phase AC, split-phase AC or multi-phase AC.

[0072] FIG. **8** is a block diagram showing a PV system according to another embodiment of the invention. Referring, to FIG. **8**, a distributed inverter, includes a gateway and a multiple-string inverter, based on the concepts embodied in FIG. **5**. The gateway **816** is the same as the gateway as described in FIG. **5**. Accordingly, the upgradeability, safety features, and enhanced performance benefits may also be similar. A plurality of PV modules **801** are connected in a first series string and coupled to first string inverter **803** via DC wiring **802**. A plurality of PV modules **805** are connected in a second series string and coupled to second string inverter **807** via DC wiring **806**. A plurality of PV modules **809** are connected in a third series string and coupled to third string inverter **811** via DC wiring **810**.

[0073] The AC output of the first string inverter **803** is coupled through an AC circuit breaker **804** into AC wiring **814**. The AC output of the second string inverter **807** is coupled through an AC circuit breaker **808** into AC wiring **814**. The AC output of the third string inverter **811** is coupled through an AC circuit breaker **812** into AC wiring **814**.

[0074] The AC wiring **814** is connected to the gateway **816**, AC cutoff **815**, and to the grid through AC wiring **818**. Optionally, the inverters **803**, **807**, **811** and the AC circuit breakers **804**, **808**, **812** may be placed in a common enclosure **813** to simplify installation and protect the inverters and circuit breakers from environmental effects. The system may be expanded by increasing the number of PV modules in a string, strings, string inverters and AC circuit breakers.

[0075] FIG. **9** is a block diagram showing a PV system according to another embodiment of the invention. Referring to FIG. **9**, a distributed converter including a gateway and a multiple inverter, based on the concepts embodied in FIG. **6**. The gateway **917** is the same as the gateway as described in FIG. **5**. Accordingly, the upgradeability, safety features, and enhanced performance benefits may also be similar. A plurality of PV modules **901** are connected in a first series string and coupled to a first DC combiner **903** via DC wiring **902**. A plurality of PV modules **906** are connected in a second series string and coupled to a first DC combiner **903** via DC wiring **907**. A plurality of PV modules **908** are connected in a third series string and coupled to a second DC combiner **910** via DC wiring **909**. A plurality of PV modules **913** are connected in a fourth series string and coupled to a second DC combiner **910** via DC wiring **914**.

[0076] The DC output of the first DC combiner **903** is connected to the DC input of a first inverter **904**. The AC output of the first inverter **904** is coupled through an AC circuit breaker **905** into AC wiring **915**. The DC output of the second DC combiner **910** is connected to the DC input of a second inverter **911**. The AC output of the second inverter **911** is coupled through an AC circuit breaker **912** into AC wiring **915**.

[0077] The AC wiring **915** is connected to the gateway **917**, AC cutoff **916**, and to the grid through AC wiring **918**. The AC circuit breakers **905**, **912**, AC wiring **915**, AC cutoff **916** and grid wiring **918**. Optionally, the inverters **904**, **911**, the DC combiners **903**, **910**, and the AC circuit breakers **905**, **912** may be placed in a common enclosure (not shown) to simplify installation and to protect them from environmental effects.

[0078] It will be apparent to those skilled in the art that various modifications and variations can be made in the present invention without departing from the spirit or scope of the invention. Thus, it is intended that the present invention cover the modifications and variations of this invention provided they come within the scope of the appended claims and their equivalents.

1. A system for transforming energy, comprising:
a plurality of photovoltaic modules;
a plurality of microinverters electrically coupled to the photovoltaic modules in a one-to-one relationship; and
a gateway electrically coupled to the plurality of microinverters, wherein features of the gateway are capable of being upgraded with at least one of hardware, software, and firmware.

2. The system of claim **1**, wherein the gateway comprises an interface unit and control unit.

3. The system of claim **1**, wherein the interface unit, comprises:
a plurality of sensors to detect dynamic utility grid conditions;
a communication unit to communicate with the plurality of microinverters and the gateway; and
an isolation unit to substantially prevent communication signals from the microinverters from appearing on the utility grid.

4. The system of claim **1**, wherein the control unit provides a monitoring functions to monitor the plurality of microinverters.

5. The system of claim **1**, wherein each of the plurality of microinverters, comprise:
an inversion unit to convert DC into AC;
a maximum power point tracking (MPPT) unit to optimize power output from the plurality photovoltaic modules;
a communications unit to provide communications to the gateway; and
a safety unit to provide safety functions.

6. The system of claim **1**, wherein the communications unit permits communication in at least one of wireless communication, wired communication, and powerline communication.

7. The system of claim **5**, wherein the safety unit is capable of disabling the microinverter upon detection of the microinverter being electrically decoupled from either the gateway or the PV module.

8. The system of claim **5**, wherein the safety unit is capable of disabling the microinverter in response to a communication signal from the communication unit of the gateway.

9. The system of claim **5**, wherein the safety unit is capable of disabling the microinverter upon detection of predetermined grid conditions.

10. The system of claim **9**, wherein the predetermined grid conditions include at least one of a low grid voltage, a high grid voltage, a low grid frequency, a high grid frequency and a predetermined change in grid impedance.

11. A gateway for use in a system for use in an energy generating system, comprising:
an interface unit for interfacing with a plurality of microinverters and a utility grid;
a control unit electrically coupled to the interface unit for controlling at least one of safety functionality, synchronization functionality to synchronize the plurality of

microinverters to the utility grid, and monitoring functionality to monitor the plurality of microinverters and the utility grid, wherein the control unit is capable of being electrically coupled to an external monitor.

12. The gateway of claim **11**, wherein the interface unit, comprises:

a plurality of sensors to detect dynamic utility grid conditions;

a communication unit to communicate with the plurality of microinverters and the control unit; and

an isolation unit to substantially prevent communication signals from the plurality of microinverters from appearing on the utility grid.

13. The system of claim **12**, wherein the communications unit is capable of communication in at least one of wireless communication, wired communication, and powerline communication.

14. The system of claim **12**, wherein each of the plurality of microinverters includes a safety unit capable of disabling the microinverter upon detection of the microinverter being electrically decoupled from either the gateway or a power module.

15. The system of claim **12**, wherein the power module is a wind turbine.

16. The system of claim **12**, wherein each of the plurality of microinverters includes a safety unit capable of disabling the microinverter upon detection of predetermined utility grid conditions.

17. A photovoltaic system for transforming radiant energy into alternating current, comprising:

a plurality of photovoltaic modules;

a plurality of microinverters coupled to the photovoltaic modules in a one-to-one relationship, wherein each of the plurality of microinverters comprise:

an inversion unit to convert DC into AC;

a MPPT unit to optimize power from the plurality photovoltaic modules;

a communications unit to provide communications to the gateway; and

a safety unit to provide safety functions;

a gateway coupled to the plurality of microinverters, wherein the gateway comprises:

an interface unit for interfacing with a plurality of microinverters and a utility grid; and

a control unit coupled to the interface unit for controlling at least one of safety functionality, synchronization to synchronize the plurality of microinverters to the utility grid, and monitoring, wherein the control unit is capable of being coupled to an external monitor.

18. The system of claim **17**, wherein the interface unit comprises a communications unit permitting communication in at least one of wireless communication, wired communication, and powerline communication.

19. The system of claim **17**, wherein the safety unit is capable of disabling the microinverter upon detection of the microinverter being electrically decoupled from either the gateway or a photovoltaic module.

20. The system of claim **17**, wherein each of the safety unit is capable of disabling the microinverter upon detection of predetermined utility grid conditions.

* * * * *