IN THE UNITED STATES DISTRICT COURT
FOR THE WESTERN DISTRICT OF TEXAS
WACO DIVISION

	§	
CYBOENERGY, INC.	§	
	§	
v.	§	Case No. 6:22-CV-01136-KC
	§	
ALTENERGY POWER SYSTEM USA, INC.	§	
	§	
	§	

REPORT AND RECOMMENDATION ON CLAIM CONSTRUCTION

TO: THE HONORABLE KATHLEEN CARDONE,
UNITED STATES DISTRICT JUDGE

This Report and Recommendation is submitted to the Court pursuant to 28 U.S.C. § 636(b)(1)(C), Fed. R. Civ. P. 72(b), and Rules 1(f) and 4(b) of Appendix C of the Local Rules of the United States District Court for the Western District of Texas, Local Rules for the Assignment of Duties to United States Magistrate Judges. Before the Court are the parties' claim construction briefs: Plaintiff CyboEnergy, Inc.'s Opening and Reply Claim Construction Briefs (ECF Nos. 36 and 39, respectively) and Defendant Altenergy Power System USA, Inc.'s ("APsystems") Responsive Claim Construction Brief (ECF No. 37). Further before the Court is the parties' September 1, 2023 Joint Claim Construction Statement (ECF No. 32) and the Parties' Amended Joint Claim Construction and Prehearing Statement (ECF No. 42). United States District Judge Kathleen Cardone referred this case to the undersigned for claim construction on October 10, 2023. ECF No. 35. After careful consideration of the briefing and the applicable law, the Court **RECOMMENDS** that the claims be construed consistently with Appendix A.

Table of Contents

APsystems Ex. 1010
Altenergy Power Sys. v. CyboEnergy
IPR2024-00362
Page 00001

I. BACKGROUND **3**
II. DESCRIPTION OF THE '489 PATENT **3**
III. LEGAL PRINCIPLES **3**
A. General Principles 3
B. Indefiniteness 5
IV. AGREED CONSTRUCTIONS **6**
V. LEGAL ANALYSIS FOR U.S. PATENT NO. 9,331,489 ..... **6**
A. Term #1: "DC power combiner . . . for combining DC output from all DC-DC boost converters" 6
B. Term #2: "constructed to run the power inverter in normal or low power mode based on calculated DC input power" 17
C. Term #3: "configured to take DC power from a dedicated input channel and its connected solar panel" 22
D. Term #4: "microcontroller . . . arranged to measure input voltage and current to calculate DC input power for each channel" 27
APPENDIX A **30**

I. BACKGROUND

In this case, CyboEnergy asserts U.S. Patent Nos. 8,786,133 and 9,331,489. All construed claim terms appear in claim 14 of the ’489 Patent. ECF No. 32 at 2–3. Thus, the Court will focus its discussion on the ’489 Patent.

II. DESCRIPTION OF THE ’489 PATENT

The ’489 Patent is directed to inverters for converting DC power generated by photovoltaic solar modules, or other DC power sources, into AC power that can be supplied to the AC power grid. ’489 Patent (ECF No. 1-4) at 1:8–17. The ’489 Patent describes and claims a method and apparatus that can optimize power production for solar power systems when there is low sunlight. More specifically, the ’489 Patent is directed to “[m]aximizing power production for solar power systems when there is low sunlight during sunrise, sunset, clouding, partial shading, and other low irradiance conditions.” *Id*. at Abstract. The ’489 Patent, titled “Maximizing Power Production at Low Sunlight by Solar Power Mini-Inverters,” issued on December 27, 2016, and the patentee filed the ’489 Patent’s underlying application on March 7, 2013.

III. LEGAL PRINCIPLES

A. General Principles

The general rule is that claim terms are generally given their plain-and-ordinary meaning. *Phillips v. AWH Corp.*, 415 F.3d 1303, 1312 (Fed. Cir. 2005) (en banc); *Azure Networks, LLC v. CSR PLC*, 771 F.3d 1336, 1347 (Fed. Cir. 2014), *vacated on other grounds*, 575 U.S. 959 (2015) (“There is a heavy presumption that claim terms carry their accustomed meaning in the relevant community at the relevant time.”) (internal quotation omitted). The plain-and-ordinary meaning

of a term is the "meaning that the term would have to a person of ordinary skill in the art in question at the time of the invention." *Phillips*, 415 F.3d at 1313.

The "only two exceptions to [the] general rule" that claim terms are construed according to their plain-and-ordinary meaning are when the patentee (1) acts as its own lexicographer or (2) disavows the full scope of the claim term either in the specification or during prosecution. *Thorner v. Sony Comput. Entm't Am. LLC*, 669 F.3d 1362, 1365 (Fed. Cir. 2012). The Federal Circuit has counseled that "[t]he standards for finding lexicography and disavowal are exacting." *Hill-Rom Servs., Inc. v. Stryker Corp.*, 755 F.3d 1367, 1371 (Fed. Cir. 2014). To act as its own lexicographer, the patentee must "clearly set forth a definition of the disputed claim term" and "'clearly express an intent' to [define] the term." *Thorner*, 669 F.3d at 1365.

"Like the specification, the prosecution history provides evidence of how the PTO and the inventor understood the patent." *Phillips*, 415 F.3d at 1317. "[D]istinguishing the claimed invention over the prior art, an applicant is indicating what a claim does not cover." *Spectrum Int'l, Inc. v. Sterilite Corp.*, 164 F.3d 1372, 1379 (Fed. Cir. 1998). The doctrine of prosecution disclaimer precludes a patentee from recapturing a specific meaning that was previously disclaimed during prosecution. *Omega Eng'g, Inc. v. Raytek Corp.*, 334 F.3d 1314, 1323 (Fed. Cir. 2003). "[F]or prosecution disclaimer to attach, our precedent requires that the alleged disavowing actions or statements made during prosecution be both clear and unmistakable." *Id.* at 1325–26. Accordingly, when "an applicant's statements are amenable to multiple reasonable interpretations, they cannot be deemed clear and unmistakable." *3M Innovative Props. Co. v. Tredegar Corp.*, 725 F.3d 1315, 1326 (Fed. Cir. 2013).

"Although the specification may aid the court in interpreting the meaning of disputed claim language . . . , particular embodiments and examples appearing in the specification will not

generally be read into the claims." *Constant v. Advanced Micro-Devices, Inc.*, 848 F.2d 1560, 1571 (Fed. Cir. 1988). "[I]t is improper to read limitations from a preferred embodiment described in the specification—*even if it is the only embodiment*—into the claims absent a clear indication in the intrinsic record that the patentee intended the claims to be so limited." *Liebel-Flarsheim Co. v. Medrad, Inc.*, 358 F.3d 898, 913 (Fed. Cir. 2004) (emphasis added).

Although extrinsic evidence can be useful, it is "less significant than the intrinsic record in determining 'the legally operative meaning of claim language.'" *Phillips*, 415 F.3d at 1317 (quoting *C.R. Bard, Inc. v. United States Surgical Corp.*, 388 F.3d 858, 862 (Fed. Cir. 2004)). Technical dictionaries may be helpful, but they may also provide definitions that are too broad or not indicative of how the term is used in the patent. *Id.* at 1318. Expert testimony may also be helpful, but an expert's conclusory or unsupported assertions for the meaning of a term are not. *Id.*

B. Indefiniteness

"[I]ndefiniteness is a question of law and in effect part of claim construction." *ePlus, Inc. v. Lawson Software, Inc.*, 700 F.3d 509, 517 (Fed. Cir. 2012). Patent claims must particularly point out and distinctly claim the subject matter regarded as the invention. 35 U.S.C. § 112, ¶ 2. A claim, when viewed in light of the intrinsic evidence, must "inform those skilled in the art about the scope of the invention with reasonable certainty." *Nautilus Inc. v. Biosig Instruments, Inc.*, 572 U.S. 898, 910 (2014). If it does not, the claim fails § 112, ¶ 2 and is therefore invalid as indefinite. *Id.* at 901. Whether a claim is indefinite is determined from the perspective of one of ordinary skill in the art as of the time the application was filed. *Id.* at 911.

IV. AGREED CONSTRUCTIONS

In their Joint Claim Construction Statement (ECF No. 32), the parties submitted that the plain and ordinary meaning should control for the terms of the '133 Patent. Further, the parties have agreed to the following constructions:

Term	**Agreed Construction**
"measurement circuits"	Plain and ordinary meaning.
"supporting circuits"	Plain and ordinary meaning.
"DC-DC boost converter"	Plain and ordinary meaning.

V. LEGAL ANALYSIS FOR U.S. PATENT NO. 9,331,489

A. Term #1: "DC power combiner . . . for combining DC output from all DC-DC boost converters"

Term	**Plaintiff's Proposed Construction**	**Defendant's Proposed Construction**
#1: "DC power combiner . . . for combining DC output from all DC-DC boost converters"	Plain and ordinary meaning	Indefinite. Alternatively, a device capable of combining DC output from all DC-DC boost converters while also selectively passing th[r]ough power received from one channel while combining power from the other connected channels.

ECF No. 32 at 2.

1. The Parties' Positions

CyboEnergy submits "[t]his claim term is not specifically defined and not ambiguous and therefore a plain and ordinary meaning is appropriate." Opening (ECF No. 36) at 11.

CyboEnergy also argues "claim 14 provides detail for DC power combiner" and then recites claim 14's subsection (c). *Id*. CyboEnergy then states claim 14 "provides all the description needed." *Id*.

In its Response, APsystems argues that even though this term does not use the word "means," it "must be construed as a means-plus-function limitation" under 35 U.S.C. § 112, ¶ 6 "because 'DC power combiner' is defined entirely in terms of what it does" and "its interaction with other parts of the claimed apparatus." Response (ECF No. 37) at 8 (citations to the '489 Patent omitted). APsystems argues the claimed function of this term is "to combine DC output from all of the DC-DC boost converters in the solar power inverter." *Id*. APsystems also cites to the "DC power combiner" shown in the '489 Patent's figures—describing it "as a literal black box." *Id*.

APsystems also provides an alternative construction—arguing that construction "takes into consideration the context of the remaining claim language and the description of the invention in the specification." Response (ECF No. 37) at 10. APsystems states the "DC power combiner" appears twice in the claims, once in limitation (c) and once in limitation (e), where "the DC power combiner links the DC power input channels to the DC power supply." *Id*. at 11. Through that link, APsystems argues, the DC power combiner "must be able to selectively convey the DC power obtained from *one* solar panel and its input channel to the DC power supply while combining the power obtained from the other solar panels and input channels." *Id* (emphasis added). For support, APsystems emphasizes a portion of the specification: "The internal DC power supply 36 ***takes DC power from one of the solar panels through its corresponding DC converter and the DC combiner*** to supply DC power to the internal electronics." Response (ECF No. 37) at 11 (emphasis in original) (citing '489 Patent at 4:45–5:2,

id. at 6:17–41, *id*. at 7:36–8:11, FIGs. 2, 4, and 6). Then, APsystems asserts, when in low power mode, the ’489 Patent teaches, “As illustrated in FIG. 3, ***the DC power from solar panel 18 can pass through the DC converter 26 and DC power combiner 32, and enter DC power supply 36.***”). Response (ECF No. 37) at 12–13 (emphasis in original) (citing ’489 Patent at 5:32–38, *id*. at 7:3–9, *id*. at 8:59–65, FIGs. 3, 5, 7).

CyboEnergy replies that the proper means-plus-function inquiry is “whether the words of the claim are understood by persons of ordinary skill in the art to have a sufficiently definite meaning as the name for structure.” Reply (ECF No. 39) at 3 (citing *Williamson v. Citrix Online, LLC*, 792 F.3d 1339, 1348 (Fed. Cir. 2015)). CyboEnergy—without support—states, “The term ‘DC power combiner’ is a common term, well known in the art.” *Id*. Then, CyboEnergy directs the Court to a Google internet search as evidence of plain meaning, arguing the term “is simply a device that combines two or more DC circuit inputs and provides one DC circuit output.” *Id*.[1] CyboEnergy posits “structure is denoted by the term itself.” *Id*. CyboEnergy asserts “[t]he term is readily understood by one of ordinary skill in the art and not a means term”—again, without support. *Id*. Finally, CyboEnergy argues “claim 14 provides detail for the DC power combiner,” followed by reciting limitation 14(c). *Id*.

2. The Court’s Analysis

Claim 14 of the ’489 Patent recites (emphasis added):

14. An m-channel solar power inverter, comprising:

> a) at least two DC input channels, each of which comprises a DC-DC boost converter, measurement circuits, supporting circuits, and cables and connectors to connect to a solar panel;

[1] The Court notes the Google search referenced in the Reply’s footnote is for “dc power combiner *circuit*”—which is not the term before the Court. Reply (ECF No. 39) at 3 n.5.

b) an AC power output port arranged to supply AC power to an electric grid;

c) *a DC power combiner connected to said DC-DC boost converters for combining DC output from all DC-DC boost converters*;

d) a digital microcontroller connected to said DC-DC boost converters, arranged to measure input voltage and current to calculate DC input power for each channel, and constructed to run the power inverter in normal or low power mode based on calculated DC input power;

e) a DC power supply *connected to all input channels through the DC power combiner*, arranged to supply DC power to electronic circuits of the power inverter, and configured to take DC power from a dedicated input channel and its connected solar panel when the digital microcontroller detects that calculated input power is below a pre-determined value.

The parties raise two issues here: (1) whether § 112, ¶ 6 applies even though the claim term does not use the term "means" and (2) if § 112, ¶ 6 does *not* apply, whether the claim term should be limited by APsystems' construction requiring the DC combiner to be "capable of combining DC output from all DC-DC boost converters while also selectively passing th[r]ough power received from one channel while combining power from the other connected channels." The Court determines that § 112, ¶ 6 does not apply to this term, and the term's plain meaning should control.

a. Is "DC power combiner" a means-plus-function limitation?

The threshold inquiry is whether "DC power combiner" falls under the purview of 35 U.S.C. § 112, ¶ 6. The Court finds APsystems has not rebutted the presumption that this term does not invoke § 112, ¶ 6.

If a claim limitation does not use the word "means," a presumption exists that the limitation does not invoke 35 U.S.C. § 112, ¶ 6. *Williamson*, 792 F.3d at 1349. "That presumption can be overcome, but only if the challenger demonstrates that the claim term fails to recite sufficiently definite structure or else recites function without reciting sufficient structure

for performing that function." *Samsung Elecs. Am., Inc. v. Prisua Eng'g Corp.*, 948 F.3d 1342, 1353–54 (Fed. Cir. 2020) (cleaned up). "The correct inquiry, when 'means' is absent from a limitation, is whether the limitation, read in light of the remaining claim language, specification, prosecution history, and relevant extrinsic evidence, has sufficiently definite structure to a person of ordinary skill in the art." *Apple Inc. v. Motorola, Inc.*, 757 F.3d 1286, 1298 (Fed. Cir. 2014), *overruled on other grounds by Williamson*, 792 F.3d at 1349.

First, because the claim term does not use "means," the presumption is that § 112, ¶ 6 does not apply. *Williamson*, 792 F.3d at 1348. Thus, APsystems has the burden to demonstrate the term fails to recite sufficiently definite structure or else recites function without reciting sufficient corresponding structure. *Samsung Elecs. Am., Inc.*, 948 F.3d at 1353–54.

Second, claim 14's surrounding claim language provides structure by describing the combiner's operation and other connections. *Apple*, 757 F.3d at 1299 ("Structure may also be provided by describing the claim limitation's operation, such as its input, output, or connections."). Claim 14(c) describes the "DC Power combiner's" operation—it "combin[es] DC output from all DC-DC boost converters." Moreover, claim 14(c) expressly describes the "DC power combiner's" input connections: it is "connected to [the] DC-DC boost converters." And claim 14(e) further details the limitation's output connection: "a DC power supply [is] to connected to all input channels through the DC power combiner . . . ." Even APsystems admits the claim language details the inputs and outputs of the "DC power combiner." Response (ECF No. 37) at 11 ("By the plain language of claim 14, the DC power combiner links the DC power input channels to the DC power supply."). Because the surrounding claim language describes the inputs and outputs of the "DC power combiner" in claim 14, that claim language provides structure for this term.

Third, the '489 Patent's figures reinforce the term's structure consistently with claim 14's language. FIG. 2, for example, shows the output of four DC-DC boost converters (elements 20, 22, 24, and 26) as inputs to the "DC Power Combiner" (element 32), whose output is connected to both the DC power supply (element 36) through line 34 and to DC-AC Inverter (element 40):

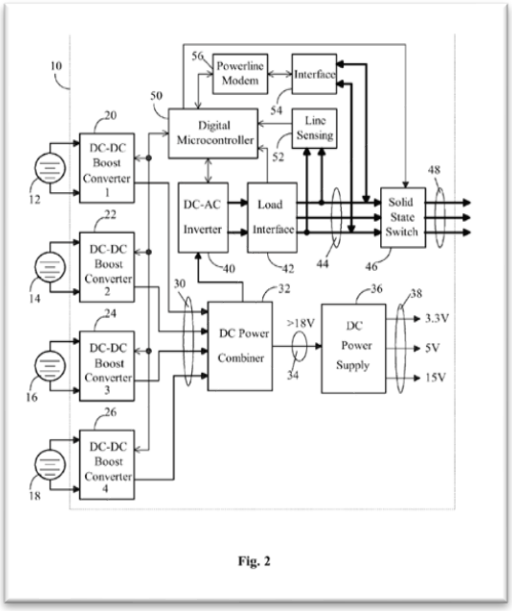

Other figures show how the "DC Power Combiner" combines "m"-channels of DC inputs in equivalent fashion. *See, e.g.*, FIG. 4 (m-channels for an on-grid inverter); FIG. 6 (m-channels for an off-grid inverter).

Fourth, APsystems provides no authority that "combiner" (or any claim term) is a "nonce" word that is a stand-in for "means." *Cf. Flypsi, Inc. v. Dialpad, Inc.*, No. 6:21-CV-00642-ADA, 2022 WL 3593131 (W.D. Tex. Aug. 22, 2022) (citing "mechanism" and "module" as "nonce" words). Nor is the Court aware of any such authority. Indeed, the only relevant authority the Court has located suggests "combiner" and related circuit terms are structural. *Linex Techs., Inc. v. Hewlett-Packard Co.*, No. C 13-159 CW, 2014 WL 2111144, at *7 (N.D. Cal. May 20, 2014) ("combiner circuits" did not require additional construction); *Saint Lawrence*

Commc'ns LLC v. ZTE Corp., No. 2:15-CV-349, 2016 WL 6275390, at *44 (E.D. Tex. Oct. 25, 2016) ("combiner circuit for combining . . ." had plain meaning); *Chanbond, LLC v. Atl. Broadband Grp., LLC*, No. 1:15-CV-00842-RGA, 2016 WL 7177612, at *5 (D. Del. Dec. 9, 2016) ("combiner" construed as a multiplexer under the parties' agreement). Further, the two terms preceding "combiner" ("DC" and "power") are defined in the '489 Patent consistently with their commonly understood meaning in the art. *See* '489 Patent at 1:8 ("The subject of this patent relates to direct current (DC) . . . .") and *id*. at 3:57 ("Power=VoltagexCurrent"). Thus, consistent with claim language, the "combiner" combines the DC power inputs and provides one or more outputs.

At bottom, the Court is persuaded that APsystems failed to carry its burden to show a "DC power combiner" does not recite sufficiently definite structure or otherwise recite function without supporting structure. APsystems, for instance, has not included any expert testimony that a "DC power combiner" is not a well-understood term or one that fails to connote structure to a skilled artisan. The Court concludes a "combiner" falls into the bucket of devices "that take their names from the functions they perform." *Greenberg v. Ethicon Endo-Surgery, Inc.*, 91 F.3d 1580, 1583 (Fed. Cir. 1996) ("The examples are innumerable, such as 'filter,' 'brake,' 'clamp,' 'screwdriver,' or 'lock.'").

b. CyboEnergy does not rely upon admissible, relevant extrinsic evidence of the term's plain meaning.

Even though the claim construction inquiry is rooted in the knowledge of a skilled artisan, CyboEnergy provides no admissible extrinsic evidence of what that knowledge is. Indeed, CyboEnergy's bare assertion "[t]he term 'DC power combiner' is a common, term, well

known in the art"[2] is not evidence.[3] Neither is CyboEnergy's reference to a Google search, whose only support is a hyperlink in a footnote. Even if that Google search was part of the record, that search is not evidence of what a skilled artisan would understand at the time of the invention. *Phillips*, 415 F.3d at 1313 ("[T]he ordinary and customary meaning of a claim term is the meaning that the term would have to a person of ordinary skill in the art in question *at the time of the invention, i.e., as of the effective filing date of the patent application*.") (emphasis added). At most, CyboEnergy defines a "DC power combiner" as "a device that combines two or more DC circuit inputs and provides one DC circuit output," which provides no more guidance to the jury than the claim language does. Reply (ECF No. 39) at 3.

c. APsystems' alternative construction unnecessarily adds limitations to the plain meaning.

Given the Court finds this term does not fall under § 112, ¶ 6, the Court turns to APsystems' alternative construction. There, APsystems rewrites the claim language as shown below:

Claim language	**APsystems' alternative construction**
(a) DC Power combiner . . . for	(a) a device capable of
(b) combining DC output from all DC-DC boost converters	(b) combining DC output from all DC-DC boost converters
(c) (No analogous language)	(c) while also selectively passing through power received from one channel while combining power from the other connected channels

[2] Reply (ECF No. 39) at 3.
[3] *See also id.* ("The term is readily understood by one of ordinary skill in the art and not a means term.").

APsystems' construction adds a new element to the claim term—selectively passing power from one channel while combining power from other channels. But APsystems fails to identify lexicography or disclaimer supporting that requirement. Instead, the citations that APsystems relies upon describe *embodiments*. For instance, APsystems emphasizes a portion of the specification: "The internal DC power supply 36 ***takes DC power from one of the solar panels through its corresponding DC converter and the DC combiner*** to supply DC power to the internal electronics." Response (ECF No. 37) at 11 (citing '489 Patent at 4:45–5:2). That disclosure, however, describes the elements of FIG. 2. And the '489 Patent expressly teaches FIG. 2 depicts an embodiment. '489 Patent at 2:6–9 ("FIG. 2 is a block diagram illustrating a 4-channel solar power Mini-Inverter . . . *according to an embodiment of this invention*.") (emphasis added). The same holds for APsystems' parallel citations to other embodiments. *Id*. at 6:17–41 (describing elements of FIG. 4); *id*. at 7:36–8:11 (describing elements of FIG. 6). Those figures, too, show embodiments. *Id*. at 2:18–21 ("FIG. 4 is a block diagram illustrating an m-channel solar power Mini-Inverter . . . *according to an embodiment of this invention*."); *id*. at 2:29–33 ("FIG. 6 is a block diagram illustrating an m-channel solar power off-grid Mini-Inverter . . . *according to an embodiment of this invention*.") (all emphases added).

APsystems' corresponding citations to the '489 Patent's low-power-mode discussion are also non-limiting. *See* '489 Patent at 5:32-38 (describing elements shown in FIG. 3); *id*. at 7:3–9 (describing elements shown in FIG. 5); *id*. at 8:59-65 (describing elements shown in FIG. 7). But again, those figures—and corresponding descriptions—all discuss embodiments. '489 Patent at 2:10–17 ("FIG. 3 is a block diagram illustrating the same 4-channel solar power Mini-Inverter as in FIG. 2, working in the low power mode . . . *according to an embodiment of this invention*."); *id*. at 2:22-28 ("FIG. 5 is a block diagram illustrating the same m-channel solar power Mini-

Inverter as in FIG. 4, working in the low power mode . . . *according to an embodiment of this invention*."); *id*. at 2:34–37 ("FIG. 7 is a block diagram illustrating the same m-channel solar power off-grid Mini-Inverter as in FIG. 6, working in the low power mode . . . *according to an embodiment of this invention*.") (all emphases added). Moreover, the low-power discussion that APsystems relies upon uses *permissive*—not mandatory—language: "the DC power from solar panel 18 *can* pass through the DC converter 26 and DC power combiner 32, and enter DC power supply 36." *Id*. at 5:36–38 (emphasis added). The specification's use of "can" is non-limiting. *Alloc, Inc. v. Int'l Trade Comm'n*, 342 F.3d 1361, 1378 (Fed. Cir. 2003) ("'Can' and 'may' are commonly used by patentees to show that a limitation is permissive.").

The other patent-in-suit—the '133 Patent—reinforces that the plain meaning controls here. The '489 Patent incorporates the '133 Patent's application. *See* '489 Patent at 1:19–22 ("In the U.S. patent application Ser. No. 12/837,162, the entirety of which is hereby incorporated by reference, we described the novel Smart and Scalable Power Inverters . . . ."). The '133 Patent explains "DC combiners . . . can be designed with a circuit that allow[s] the output from all DC-DC boost converters to connect in parallel so that all DC currents will be added together." '133 Patent (ECF No. 1-3) at 9:22–26. That combing-current-circuit disclosure is consistent with the '489 Patent's claimed objective of its "DC power combiner"—"combining DC output [i.e., the current and corresponding voltage] from all DC-DC boost converters." '489 Patent at claim 14(c). And the '133 Patent does not define its "DC combiner" to require selectively passing power. Further, while APsystems argues that the Court cannot look to the '133 Patent for

corresponding structure for the "DC power combiner,"[4] that prohibition applies only if the claim term falls under § 112, ¶6—a position the Court rejects.

Thus, claim 14 does not require the "DC power combiner" to "selectively pass" power. None of APsystems' citations to the specification rise to the level of lexicography or disclaimer. Thus, the Court therefore hereby expressly rejects APsystems' proposed construction, and no further construction is necessary. *See United States Surgical Corp. v. Ethicon, Inc.*, 103 F.3d 1554, 1568 (Fed. Cir. 1997) ("Claim construction is a matter of resolution of disputed meanings and technical scope, to clarify and when necessary to explain what the patentee covered by the claims, for use in the determination of infringement. It is not an obligatory exercise in redundancy."); *see also O2 Micro Int'l Ltd. v. Beyond Innovation Tech. Co.*, 521 F.3d 1351, 1362 (Fed. Cir. 2008) ("[D]istrict courts are not (and should not be) required to construe every limitation present in a patent's asserted claims."); *Finjan, Inc. v. Secure Computing Corp.*, 626 F.3d 1197, 1207 (Fed. Cir. 2010) ("Unlike *O2 Micro*, where the court failed to resolve the parties' quarrel, the district court rejected Defendants' construction."); *Bayer Healthcare LLC v. Baxalta Inc.*, 989 F.3d 964, 977–79 (Fed. Cir. 2021).

The Court recommends **"DC power combiner . . . for combining DC output from all DC-DC boost converters"** to have its **plain meaning**.

[4] Response (ECF No. 37) at 9–10 n.2.

B. Term #2: "constructed to run the power inverter in normal or low power mode based on calculated DC input power"

Term	Plaintiff's Proposed Construction	Defendant's Proposed Construction
#2 "constructed to run the power inverter in normal or low power mode based on calculated DC input power"	No construction necessary	Constructed to run the power inverter in normal mode when the power generated by **any** of the connected solar panels is above some threshold or in low power mode when the power generated by each of the connected solar panels falls below some threshold.[5] Modified proposal: Low Power Mode means: when the power generated by the connected solar panels falls below some threshold.

ECF No. 32 at 2.

1. The Parties' Positions

CyboEnergy argues this term is not specifically defined; thus, its plain meaning should control. Opening (ECF No. 36) at 12. CyboEnergy then transitions into arguing that APsystems' construction "completely rewrites the claim, changing the patentees [sic] words and adds nothing to assist the jury." *Id*. CyboEnergy also asserts APsystems' "proffered construction requires operation in the normal mode or low power mode *when the total power generated by the connected solar panels falls below some threshold*." *Id*. (emphasis in original). According to CyboEnergy, "the claim term only requires that the microcontroller is constructed to run the power inverter in normal mode or low power." *Id*.

[5] Response (emphasis in original). The Court notes that the parties did not initially agree on the language of APsystems' proposed construction. *Compare* Opening (ECF No. 36) at 12 and Reply (ECF No. 39) at 4 *with* Response (ECF No. 37) at 14. That issue appears resolved in the parties' amended claim construction filing. ECF No. 42 at 2.

APsystems responds, based on CyboEnergy's preliminary infringement contentions, it "believe[s] that the parties will dispute the scope of the plain and ordinary meaning of this term." Response (ECF No. 37) at 14. APsystems argues, based on the context of claim 14(d), "the calculated DC power used to decide whether the inverter is in normal or low power mode is the calculated 'DC input power for each channel.'" *Id*. APsystems further argues, "The specification confirms that comparing each channel's input power to a threshold triggers low power mode when it explains that when the inverter is in the low power state, DC power is pulled from one and only one input channel and its connected solar panel to provide DC power to the electronic circuits of the inverter." *Id*. at 15 (citing '489 Patent at Abstract, *id*. at 1:57–63, *id*. at 2:10–17, *id*. at 2:22–29, *id*. at 2:34–40). According to APsystems, when "the inverter enters low power mode," it "begins using one—and only one—solar panel to provide DC power to the inverter electronics, when the calculated DC power falls below a pre-determined value." Response (ECF No. 37) at 15. APsystems also argues that the disclosed software program of the microcontroller supports its construction because the microcontroller "must determine that there is 'sufficient irradiance,' i.e., the power provided by that channel is above a predetermined value." *Id*. at 16. According to APsystems, if the "microcontroller determines the input is below a predetermined value, it will execute functions to set the inverter to low power mode . . . ." *Id*. APsystems also reproduces FIG. 9, which provides a flowchart of the microcontroller low-power functionality, arguing that the functions captured by its construction appear in the figure. *Id*.

CyboEnergy replies that APsystems' construction "is more of an infringement argument" and argues resolving questions of claim scope "does not mean a court must change the patentees [sic] words, especially when those words are not ambiguous or specifically defined." Reply (ECF No. 39) at 3. CyboEnergy argues APsystems has failed to identify any lexicography and

APsystems' alleged claim-language-swap "adds nothing to assist the jury." *Id.* at 4. CyboEnergy asserts APsystems' construction "requires operation in the normal mode or low power mode when the total power generated by the connected solar panels falls below some threshold." *Id.* at 5. But per CyboEnergy, "the claim term only requires that the microcontroller is constructed to run the power inverter in normal mode or low power." *Id*. at 5.

After the Court provided its preliminary constructions before the claim construction hearing, APsystems modified its proposal to define the "Low Power Mode."

2. The Court's Analysis

The issue presented here is whether the detailed description—such as the conversion of the '489 Patent's FIG. 9 at element 316 into prose—should be incorporated into broader claim language. The Court declines to do so.

APsystems' construction injects additional language into the claim (underlined below), while deleting other parts of the claim (struck below):

> Constructed to run the power inverter in normal <u>mode when the power generated by **any** of the connected solar panels is above some threshold</u> or <u>in</u> low power mode <u>when the power generated by each of the connected solar panels falls below some threshold</u> ~~based on calculated DC input power~~.

Thus, APsystems' construction creates two conditions—it requires that the power inverter must run (a) in normal mode when *any* connected solar panel is above some threshold and (b) in low-power mode when *each* of the connected solar panels falls below some threshold. But the claim language is broader—it simply requires the inverter to toggle between the normal or low-power modes "based on calculated DC input power." In other words, APsystems' dual-condition construction replaces broader language. But APsystems does not show where the '489 Patent's specification *requires* these additional dual conditions.

Indeed, APsystems' construction converts the '489 Patent's FIG. 9 from flow-chart to prose, and then APsystems adds that prose into the claim language. *See* Response (ECF No. 37) at 16 ("These functions are depicted in Figure 9 of the '489 Patent . . . ."). Yet, FIG. 9 depicts an embodiment—not the invention. '489 Patent at 9:66–10:3 ("FIG. 9 is a flow chart describing the Power Control Subroutine . . . running in the digital microcontroller of a solar power Mini-Inverter *according to an embodiment of this invention*") (emphasis added). And embodiments are not the claims. *Liebel-Flarsheim Co.*, 358 F.3d at 913. Thus, the Court sees no reason to incorporate FIG. 9 into the claim language, especially when that figure explains an embodiment using capitalized terms (e.g., "Power Control Subroutine," "System Power State," and "Channel State") *absent* from the claims. *See, e.g.*, *Lextron Sys. v. Microsoft Corp.*, No. C-04-0588 VRW, 2005 WL 6220089, at *8 (N.D. Cal. Jun. 1, 2005) ("'Internet' is capitalized in the claim language, suggesting the proper noun; whatever 'internet' might mean, there is only one 'Internet.'"). If the patentee wanted to include FIG. 9's specific conditions into the claims, it could have.

Thus, APsystems' relied-upon disclosure does not purport to define the DC-input-power calculation claimed, and hence does not meet the "exacting" standard for lexicography, which "requir[es] the patentee to 'clearly express an intent' to redefine a term." *Baxalta Inc. v. Genentech, Inc.*, 972 F.3d 1341, 1349 (Fed. Cir. 2020). Moreover, the '489 Patent's disclosure does not use the phrases "above some threshold," "below some threshold," or even "threshold," by itself.[6] Yet those terms appear in APsystems' proposed construction. Rather, the patentee evidently relied on the plain meaning of "based on calculated DC input power," and "[t]he

[6] APsystems clarified at the claim construction hearing that it was not wed to the term "threshold" in its construction, which the Court appreciates.

patentee is free to choose a broad term and expect to obtain the full scope of its plain and ordinary meaning unless the patentee explicitly redefines the term or disavows its full scope." *Thorner*, 669 F.3d at 1367.

APsystems' modified proposal (provided after APsystems received the Court's preliminary constructions) seeks to define the "low power mode" of the claims as "when the power generated by the connected solar panels falls below some threshold." But as APsystems emphasized during the hearing (and CyboEnergy agreed), the claims already link the "low power mode" of claim 14(d) with "when the digital microcontroller detects that calculated input power is below a pre-determined value" of claim 14(e). Thus, to construe "lower power mode" separately as APsystems suggests would add a parallel requirement (with different words) to claim 14(e)'s limitation that the inverter changes its functioning when it detects the "input power is below a pre-determined value." Further, based on the parties' arguments at the hearing, they appear to dispute that claim 14 requires two *distinct* modes of operation. But the resolution to that issue is also a function of the claim language. Claim 14 expressly delineates between "normal or low power mode." '489 Patent at claim 14(d). Thus, the claims already require that its "m-channel solar power inverter" have a microcontroller "constructed to run power inverter in normal or low power mode . . . ." *Id*. The Court is persuaded that adding an express construction of "low power mode" would be redundant of the plain claim language that already requires two distinct power modes.

The Court rejects both of APsystems' proposed constructions and finds that no further construction is necessary. *See U.S. Surgical*, 103 F.3d at 1568; *see also O2 Micro*, 521 F.3d at 1362; *Finjan*, 626 F.3d at 1207; *Bayer*, 989 F.3d at 977–79.

The Court therefore recommends **"constructed to run the power inverter in normal or low power mode based on calculated DC input power"** to have its **plain meaning**.

C. Term #3: "configured to take DC power from a dedicated input channel and its connected solar panel"

Term	Plaintiff's Proposed Construction	Defendant's Proposed Construction
#3: "configured to take DC power from a dedicated input channel and its connected solar panel"	No construction needed, plain and ordinary meaning	Configured to take DC power from one and only one input channel and its connected solar panel.

ECF No. 32 at 3.

1. The Parties' Positions

CyboEnergy asserts this claim term "is not specifically defined and not ambiguous and therefore a plain and ordinary meaning is appropriate." Opening (ECF No. 36) at 13. CyboEnergy asserts APsystems' construction attempts to "rewrite the claim term using words not found in the specification"—"one and only one." *Id.* CyboEnergy further states the terms "are easily understood words and will not confuse the jury or be capable of multiple constructions." *Id.*

APsystems responds, based on CyboEnergy's preliminary infringement contentions, it "believe[s] that the parties will dispute the scope of the plain and ordinary meaning of this term." Response (ECF No. 37) at 16. APsystems asserts its "construction gives meaning to the claim term 'dedicated,' which in view of the specification, means one and only one." *Id.* at 16–17. According to APsystems, "every embodiment described in the specification requires the alleged invention to *always* take DC power from one and only input channel and its connected solar panel when the microcontroller is in lower power mode . . . ." *Id.* at 18 (emphasis in original) (citing '489 Patent at 4:24–38; *id.* at 6:36-79; *id.* at 8:52-65; *id.* at 10:15-23; FIGs. 3, 5, and 7).

APsystems argues CyboEnergy "agrees with APsystems that a key aspect of the alleged invention is that it can work in lower power 'can work in a low power mode when there is low Sunlight, ***take power from one Solar panel to Supply DC power to its internal electronic circuits***, and also invert the DC power from the ***remaining connected Solar panels*** to single phase or three-phase AC power feeding to the electrical grid or powering AC loads.'" Response (ECF No. 37) at 19 (emphasis in original) (citing Opening at 6).

In reply, CyboEnergy repeats its arguments from its Opening Brief. Reply (ECF No. 39) at 5.

2. The Court's Analysis

The issue presented here is whether "a dedicated input channel" means "one and only one input channel," as APsystems argues, or if the Court should give the term its ordinary meaning, as CyboEnergy argues. Because APsystems does not show lexicography or disavowal of claim scope, the Court applies the plain meaning to this term.

APsystems' construction improperly replaces the claim language "*a* dedicated" with "one and only one." The Federal Circuit has "explained that the indefinite article 'a' means 'one or more' in open-ended claims containing the transitional phrase 'comprising.'" *Salazar v. AT&T Mobility LLC*, 64 F.4th 1311, 1315 (Fed. Cir. 2023), *cert. denied*, No. 23-241, 2023 WL 8007360 (U.S. Nov. 20, 2023) (citations omitted). "An exception to the general rule that 'a' . . . means more than one only arises where the language of the claims themselves, the specification, or the prosecution history necessitate a departure from the rule." *Baldwin Graphic Sys., Inc. v. Siebert, Inc.*, 512 F.3d 1338, 1342–43 (Fed. Cir. 2008). "The exceptions to this rule are *extremely limited*: a patentee must evince a *clear intent* to limit 'a' or 'an' to 'one.'" *Convolve, Inc. v. Compaq Comput. Corp.*, 812 F.3d 1313, 1321 (Fed. Cir. 2016) (cleaned up)

(emphasis added). Claim 14 of the '489 Patent uses the open-ended transition "comprising."[7] Thus, the general rule applies—"a dedicated input channel" means "one or more dedicated input channels"—unless APsystems can show the intrinsic evidence necessitates a different result. But APsystems has not shown this limitation falls in the "extremely limited" situation where the patentee expressed "a clear intent" to limit the claims. *Convolve, Inc.*, 812 F.3d at 1321.

APsystems couches its construction as one that comports with the '489 Patent's specification, but none of APsystems' cited excerpts compel such a result. APsystems begins with a citation that lacks any restrictive language:[8]

> A multiple-channel solar power Mini-Inverter can work in the low power mode when there is low sunlight, ***take power from one solar panel to supply DC power to its internal electronic circuits, and also invert the DC power*** from the remaining connected solar panels to single phase or three-phase AC power to be sent to the power grid or AC loads.

This teaching uses the word "can" to describe its "multiple-channel solar power Mini-Inverter." That description, however, is non-limiting because "can" is a permissive word. *Alloc*, 342 F.3d at 1378. Nor does APsystems identify any limiting use of "invention" in the '489 Patent's specification, despite APsystems' citations to Federal Circuit authority restricting claims where the patent-in-suit linked the "invention" to disclosed embodiments. *See* Response (ECF No. 37) at 17 (citing cases). At most, the above description appears in the '489 Patent's first summary section entitled "INVENTION," but inclusion in a summary-of-the-invention section does not render that written description limiting, especially when that description does not include the at-issue claim language (i.e., "dedicated"). *Armament Sys. & Procedures, Inc. v. Monadnock Lifetime Prods., Inc.*, 168 F.3d 1319, 1319 (Fed. Cir. 1998) (declining to limit claim based on

[7] *See* '489 Patent (ECF No. 1-4) at Claim 14 ("An m-channel solar power inverter, *comprising*: . . . .") (emphasis added).
[8] Response (ECF No. 37) at 18 (citing '489 Patent at 1:54-63) (bold in original) (italics added).

"Summary of the Invention" disclosure when that disclosure used different language from the claim).

Further, APsystems argues every disclosed embodiment takes DC power from one and only one input channel. Response (ECF No. 37) at 18. But a limitation's inclusion in every embodiment[9] does not limit broader claim language. *Alloc*, 342 F.3d at 1370 ("[I]t is impermissible to read the one and only disclosed embodiment into a claim without other indicia that the patentee so intended to limit the invention"); *Electro Med. Sys., S.A. v. Cooper Life Scis., Inc.*, 34 F.3d 1048, 1054 (Fed. Cir. 1994) ("[P]articular embodiments appearing in a specification will not be read into the claims when the claim language is broader than such embodiments."); *Acumed LLC v. Stryker Corp*., 483 F.3d 800, 807 (Fed. Cir. 2007) (declining to limit the term "transverse" to mean perpendicular—despite every embodiment using a perpendicular arrangement—to not confine the claim terms to the embodiments).

APsystems' other citations to the '489 Patent's disclosure are likewise non-limiting. For instance, APsystems block-cites to discussions of FIGs. 3, 5, and 7. Response (ECF No. 37) at 18–19. But as discussed above, the '489 Patent describes those figures as embodiments—not the invention, itself. Similarly, APsystems cites a discussion of the '489 Patent's "System Power State" internal variable, but that discussion does not contain limiting language. *Id*. at 19 (citing '489 Patent at 10:15–23). Instead, the '489 Patent discloses the "System Power State" as part of the "Power Control Subroutine"—which are not claim limitations—and links that "Power Control Subroutine" to an *embodiment*. '489 Patent (ECF No. 1-4) at 9:66–10:3 ("FIG. 9 is a flow chart describing the Power Control Subroutine . . . running in the digital microcontroller of

[9] At the claim construction hearing, CyboEnergy did not identify an embodiment that included more than one input channel to the DC power supply.

a solar power Mini-Inverter *according to an embodiment of this Invention*.") (emphasis added); *id*. at 10:4–6 ("There are two internal variables in the Power Control Subroutine as listed in Table 1: (i) System Power State . . . ."). Hence, APsystems has not shown the disclosed embodiments limit this term's claim scope.

Additionally, the '489 Patent's other claims reinforce that this term's plain meaning should apply. The '489 Patent uses the term "dedicated" in five of its claims, with the first four instances appearing in unasserted claims. *See id*. at claim 1(l) ("configured with *one* input channel and its connected solar panel *dedicated* to supply DC power . . . .") (emphasis added); *id*. at claim 6(l) (same); *id*. at claim 9(l) (same); *id*. at claim 3(l) (same); and *id*. at 14(e) ("configured to take DC power from a dedicated input channel and its connected solar panel"). In those first four instances, however, the '489 Patent specifically claims "*one* input channel" with a "solar panel *dedicated* to supply DC power." *Id*. (emphasis added). But in claim 14, the claim language foregoes "one input channel" for "a dedicated input channel." Hence, the patentee differentiated between "one" and "a" for "input channel[s]"—indicating the differing claim terms should be given different meanings. *See, e.g.*, *Helmsderfer v. Bobrick Washroom Equip., Inc.*, 527 F.3d 1379, 1382 (Fed. Cir. 2008) (declining to construe "partially" to mean "generally" or "at least" when those terms appeared elsewhere in the claims). Thus, APsystems' construction would improperly equate "one" (and only one) with "a dedicated." *Id*. Further, in claim 14, the "dedicated input channel" limit provides no antecedent basis for other claim terms, reinforcing the general rule for "a" applies here. *Salazar*, 65 F.4th at 1317–18 (discussing restricting "a" limitation to "one" when the limitation provided antecedent basis).

Finally, at the claim construction hearing, CyboEnergy stated the plain meaning of "dedicated" was "at least one." But "at least one" is the general meaning of the indefinite article

"a" in patent claims[10]—not "dedicated." Neither party, however, provided any evidence for the plain meaning of "dedicated" apart from their numbers-based proposals. Thus, the Court declines to deviate from the plain meaning of "dedicated" here.

Accordingly, the Court rejects APsystems' proposed construction and finds that no further construction is necessary. *See U.S. Surgical*, 103 F.3d at 1568; *see also O2 Micro*, 521 F.3d at 1362; *Finjan*, 626 F.3d at 1207; *Bayer*, 989 F.3d at 977–79.

Thus, the Court recommends "**configured to take DC power from a dedicated input channel and its connected solar panel**" to have its **plain and ordinary meaning**.

D. Term #4: "microcontroller . . . arranged to measure input voltage and current to calculate DC input power for each channel"

Term	Plaintiff's Proposed Construction	Defendant's Proposed Construction
#4: "microcontroller . . . arranged to measure input voltage and current to calculate DC input power for each channel"	No construction needed, plain and ordinary meaning	Plain and ordinary meaning: the microcontroller measures the input voltage and current to calculate the DC input power for each DC input channel.

ECF No. 42 at 2.

1. The Parties' Positions

This term was not part of the initial disputed terms listed in the parties' Joint Claim Construction Chart. ECF No. 32. APsystems, in its Response, asserts "microcontroller" is an agreed term and should have its plain meaning. Response (ECF No. 37) at 1–2. CyboEnergy responds that it does not agree with APsystems' construction. Reply (ECF No. 39) at 1–2. Yet

[10] *KCJ Corp. v. Kinetic Concepts, Inc.*, 223 F.3d 1351, 1356 (Fed. Cir. 2000) ("[T]he claim limitation 'a,' without more, requires at least one.").

CyboEnergy does not explain why—even though CyboEnergy asserts the plain meaning should also apply. *Id*. The Court provided its preliminary construction based on that limited briefing. But the parties declined to argue this limitation at the claim construction hearing and confirmed there was no dispute regarding this term.

2. The Court's Analysis

The issue here (as best as the Court can discern) is whether the Court should clarify the plain meaning of this claim term and require the "microcontroller" measure and calculate the input DC voltage and power, respectively. But the claim language at issue simply requires the "microcontroller" be "*arranged to* measure input voltage and current to calculate DC input power for each channel." '489 Patent at claim 14(d) (emphasis added). Thus, APsystems' construction would eliminate the "arranged to" language from the claim and convert the infinitives "to calculate" and "to measure" to their present-tense verb forms. The Court declines to do so. If APsystems' position is the claimed "microcontroller" must do some detection related to DC power input, claim 14(e) already provides that requirement: "when the digital microcontroller *detects* that calculated input power is below a pre-determined value." '489 Patent at claim 14(e) (emphasis added).

Thus, the Court recommends **"microcontroller . . . arranged to measure input voltage and current to calculate DC input power for each channel"** to have its **plain meaning**.

VI. RECOMMENDATION

For the above reasons, it is the **RECOMMENDATION** of the United States Magistrate Judge to the United States District Judge that all claims be construed consistently with Appendix A.

VII. OBJECTIONS

The parties may wish to file objections to this Report and Recommendation. Parties filing objections must specifically identify those findings or recommendations to which they object. The District Court need not consider frivolous, conclusive, or general objections. *See Battle v. United States Parole Comm'n*, 834 F.2d 419, 421 (5th Cir. 1987).

A party's failure to file written objections to the proposed findings and recommendations contained in this Report within fourteen (14) days after the party is served with a copy of the Report shall bar that party from de novo review by the District Court of the proposed findings and recommendations in the Report. *See* 28 U.S.C. § 636(b)(1)(C); *Thomas v Arn*, 474 U.S. 140, 150–53 (1985); *Douglass v. United Servs. Auto. Ass'n*, 79 F.3d 1415, 1417 (5th Cir. 1996) (en banc). Except upon grounds of plain error, failing to object shall further bar the party from appellate review of unobjected-to proposed factual findings and legal conclusions accepted by the District Court. *See* 28 U.S.C. § 636(b)(1)(C); *Thomas*, 474 U.S. at 150–53; *Douglass*, 79 F.3d at 1415.

SIGNED this 20th day of December, 2023.

DEREK T. GILLILAND
UNITED STATES MAGISTRATE JUDGE

APPENDIX A

All construed terms appear in claim 14 of U.S. Patent No. 9,331,489.

Term	Plaintiff's Proposal	Defendant's Proposal	Court's Final Construction
#1: "DC power combiner…for combining DC output from all DC-DC boost converters"	Plain and ordinary meaning; no construction needed	Indefinite. Alternatively, a device capable of combining DC output from all DC-DC boost converters while also selectively passing th[r]ough power received from one channel while combining power from the other connected channels.	Plain meaning
#2: "constructed to run the power inverter in normal or low power mode based on calculated DC input power"	Plain and ordinary meaning; no construction needed	Constructed to run the power inverter in normal mode when the power generated by **any** of the connected solar panels is above some threshold or in low power mode when the power generated by each of the connected solar panels falls below some threshold. Modified Proposal: Low Power Mode means: when the power generated by the connected solar panels falls below some threshold.	Plain meaning
#3: "configured to take DC power from a dedicated input channel and its connected solar panel"	Plain and ordinary meaning; no construction needed	Configured to take DC power from one and only one input channel and its connected solar panel.	Plain meaning
#4: "microcontroller . . . arranged to measure input voltage and current to calculate DC input power for each channel"	No construction needed, plain and ordinary meaning	Plain and ordinary meaning: the microcontroller measures the input voltage and current to calculate the DC input power for each DC input channel.	Plain meaning