Askeladden L.L.C.
Petitioner
v.
Calabrese Stemer LLC
Patent Owner

Case Nos. IPR2024-00367, -00368, -00369
U.S. Patent Nos. 7,357,310; 7,954,706; 8,783,564

Petitioner's Demonstratives

Thursday, March 27, 2025

10:00 AM, By Video

Demonstrative Exhibit – Not Evidence - 1

Petitioner's Motion To Exclude Exhibit 2001 Should Be Granted

Exhibit 2001 Should Be Excluded

Multiple Independent Grounds to Exclude:

- 37 C.F.R. § § 42.23(b)
- FRE 802 (Hearsay)
- FRE 1002 (Best Evidence Rule)

Exhibit 2001 Should Be Excluded Under 37 C.F.R. § 42.23(b)

- "A sur-reply … may not be accompanied by new evidence other than deposition transcripts of the cross-examination of any reply witness." 37 C.F.R. § 42.23(b).

- Undisputed that Exhibit 2001 is uncompelled direct testimony—not cross-examination of reply witness.

'310 Proceeding, Petitioner's Motion to Exclude, Paper 29.
'564 Proceeding, Petitioner's Motion to Exclude, Paper 33.

Exhibit 2001 Should Be Excluded Under 37 C.F.R. § 42.23(b)

- Petitioner presented obviousness grounds of invalidity in Petitions and the Board instituted on these grounds.
- Patent Owner had the burden to present any evidence of secondary considerations in its Response.

’310 Proceeding, Petition, Paper 1, at 11, 31-38.
’310 Proceeding, Institution Decision, Paper 6, at 21.
’564 Proceeding, Petition, Paper 1, at 9, 38-59.
’564 Proceeding, Institution Decision, Paper 8, at 25-26.

Exhibit 2001 Should Be Excluded Under FRE 802

FRE 801(c) Hearsay. "Hearsay" means a statement that:

(1) the declarant does not make while testifying at the current trial or hearing; and

(2) a party offers in evidence to prove the truth of the matter asserted in the statement.

'310 Proceeding, Petitioner's Motion to Exclude, Paper 29.
'564 Proceeding, Petitioner's Motion to Exclude, Paper 33.

Exhibit 2001 Should Be Excluded Under FRE 802

Exhibit 2001 Is Inadmissible Hearsay

- Undisputed that it is an out-of-court statement.
- Undisputed that it is offered for its truth.
- Declarant not subject to cross-examination.
- Also hearsay-within-hearsay because the Declaration (a hearsay statement) describes and characterizes contents of license agreements (hearsay statements).

’310 Proceeding, Petitioner’s Motion to Exclude, Paper 29.
’564 Proceeding, Petitioner’s Motion to Exclude, Paper 33.

Exhibit 2001 Should Be Excluded Under FRE 1002

FRE 1002. Requirement of the Original

An original writing, recording, or photograph is required in order to prove its content unless these rules or a federal statute provides otherwise.

’310 Proceeding, Petitioner’s Motion to Exclude, Paper 29.
’564 Proceeding, Petitioner’s Motion to Exclude, Paper 33.

Exhibit 2001 Should Be Excluded Under FRE 1002

Exhibit 2001 Is Inadmissible Under FRE 1002

- The licenses described in the exhibit are not in evidence.
- No rule or statute excuses compliance with this rule.

’310 Proceeding, Petitioner’s Motion to Exclude, Paper 29.
’564 Proceeding, Petitioner’s Motion to Exclude, Paper 33.

Challenged Claims

- U.S. 7,357,310 – claims 1-4
- U.S. 7,954,706 – claims 1-7
- U.S. 8,783,564 – claims 1-19
  - Patent Owner disclaimed claims 10-19 (-00368, Paper 7)

Instituted Grounds

Claims	35 U.S.C. §	Reference(s)
’310 Patent: 1-4	102	Horie
’310 Patent: 1-4	103	Horie
’564 Patent: 1-9	102	Horie
’564 Patent: 1-9	103	Horie
’706 Patent: 1, 2	102	Horie
’706 Patent: 1, 2	103	Horie
’706 Patent: 3-5	103	Horie, Kobayashi
’706 Patent: 6, 7	102	Kano
’706 Patent: 6, 7	103	Kano

Undisputed Issues

- **<u>'706 Patent</u>:** No response filed by Patent Owner. Petitioner's arguments are unrebutted.

- **<u>'310 Patent</u>:** Undisputed that Horie discloses all limitations of claim 1 other than 1[c].
    - Also undisputed that Horie discloses all limitations of dependent claim 2.

- **<u>'564 Patent</u>:** Undisputed that Horie discloses all limitations of claim 1 other than 1[d].
    - Also undisputed that Horie discloses all limitations of dependent claims 3-8.

No Real Dispute On Level Of POSITA

- "Patent Owner does not disagree, for the purposes of this submission, with the level of ordinary skill in the art as proffered by Petitioner…"
  - '564 Proceeding, Patent Owner's Response, Paper 12, at 2.

'310 Proceeding, Petitioner's Reply, Paper 14, at 2.
'564 Proceeding, Petitioner's Reply, Paper 18, at 2.

Patent Owner's Proposed Constructions Are Unsupported By Evidence

Patent Owner's Proposed Constructions

- "independent of and separate from" / "distinct" = second channel does not overlap with the first channel
  - '310 Proceeding, Patent Owner's Response, Paper 10, at 16-17.
  - '564 Proceeding, Patent Owner's Response, Paper 12, at 10.

No Lexicography Or Disclaimer

- Patent Owner does not allege either lexicography or disclaimer apply

- Addition of "independent of and separate from" during prosecution of '310 Patent was to distinguish prior art where customer's mobile phone was also the merchant terminal
  - "In no case is the cellular telephone [in Kawan] integrated into the system in parallel with another transaction terminal (and with separate communications channels that may be operative simultaneously)." '310 Proceeding, Ex. 1002, at 49.

'310 Proceeding, Petitioner's Reply, Paper 14, at 12-13.
'564 Proceeding, Petitioner's Reply, Paper 18, at 8-9

Applicant Did Not Distinguish Overlap in Prior Art

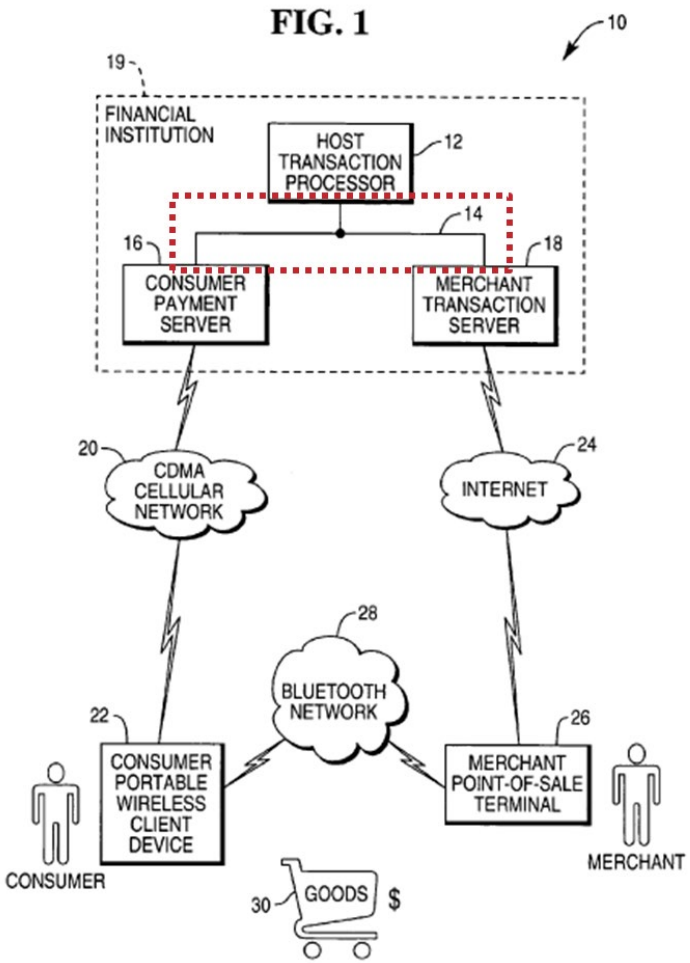

Ex. 1014, Fig. 1 (annotated).

'310 Proceeding, Petitioner's Reply, Paper 14, at 14.
'564 Proceeding, Petitioner's Reply, Paper 18, at 11.

Preferred Embodiment Shows Overlap

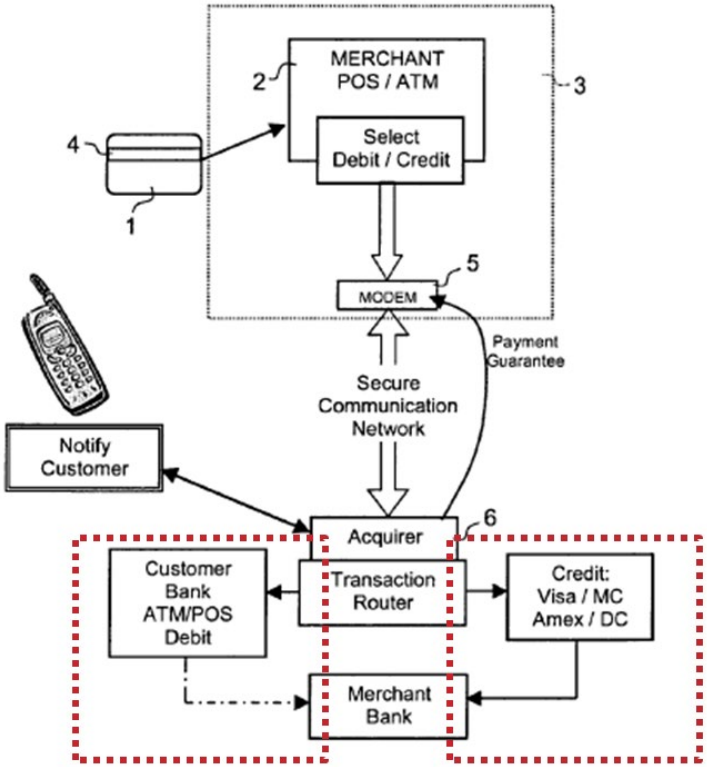

FIG. 1

Ex. 1001, Fig. 1 (annotated).

'310 Proceeding, Petitioner's Reply, Paper 14, at 18.
'564 Proceeding, Petitioner's Reply, Paper 18, at 14.

Demonstrative Exhibit – Not Evidence – 18

Horie Anticipates & Renders Obvious Claims 1-4 of the ’310 Patent

Horie Anticipates the Claims of the ’310 Patent

’310 Patent, Claim 1 Preamble	Horie
1. A payment authorization method, which comprises:	“…relates to a card usage status notification method that automatically notifies a card user, etc. that a card payment transaction has occurred via a network, and a card payment transaction system using the same method.” Ex. 1006, at [0001].

’310 Proceeding, Petition, Paper 1, at 14-15.

Horie Anticipates the Claims of the ’310 Patent

’310 Patent Claim 1[a]	Horie
gathering, at a merchant's, account information for payment of a customer's purchase;	“when the process is started, card information, transaction details information, and other necessary information are sequentially read on the card transaction terminal device side.” Ex. 1006, at [0046].

’310 Proceeding, Petition, Paper 1, at 15-16.

Horie Anticipates the Claims of the ’310 Patent

’310 Patent Claim 1[b]	Horie
transmitting an authorization request to a financial authorization system requesting payment authorization for the customer's purchase via a first transmission channel	[FIG. 1] 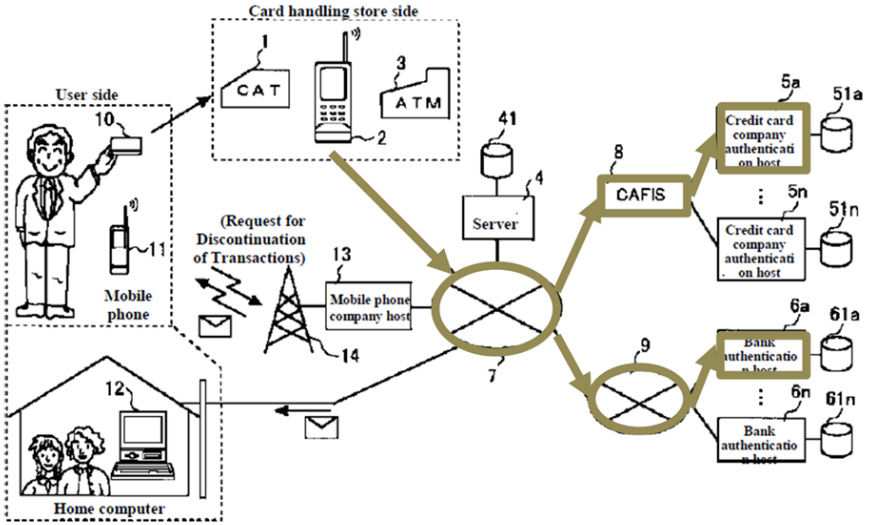 Ex. 1006, Fig 1 (annotated).

’310 Proceeding, Petition, Paper 1, at 17-19.

Horie Anticipates the Claims of the ’310 Patent

’310 Patent Claim 1[c]	Horie
notifying the customer that the authorization request has been received by transmitting, via a second transmission channel independent of and separate from the first transmission channel between the merchant's and the financial institution, a notification to a communications device associated with the customer; and	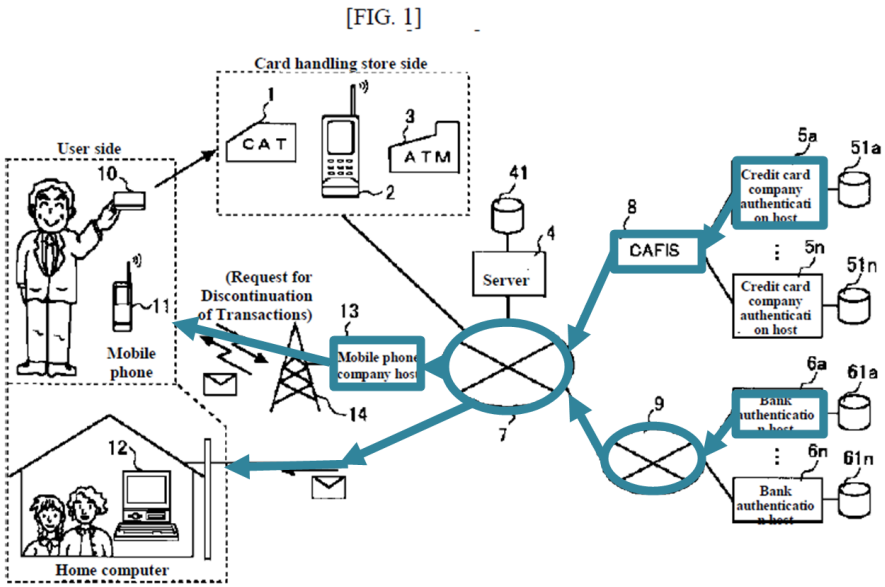 Ex. 1006, Fig 1 (annotated).

’310 Proceeding, Petition, Paper 1, at 19-23.

Horie Anticipates the Claims of the ’310 Patent

’310 Patent Claim 1[d]	Horie
processing the transaction for payment authorization substantially without requiring a direct communications link between the communications device associated with the customer and the merchant's and substantially without requiring a response to the notification from the communications device associated with the customer.	“an e-mail is sent to notify the user after the card authentication process in the card payment transaction, the e-mail can also be sent, for example, during the card authentication process.” Ex. 1006, at [0073].

’310 Proceeding, Petition, Paper 1, at 23-25.

Horie Renders the Claims Obvious Without Modification

- A claim may be rendered unpatentable under § 103 based on a single prior art reference that discloses every claim limitation
- When no modification of the prior art is necessary to arrive at the claimed invention, there does not need to be a finding of a motivation to modify
- Unification Techs. LLC v. Micron Tech., Inc., 2024 WL 3738401, at *6.

’310 Proceeding, Petitioner’s Reply, Paper 14, at 7-10.
’564 Proceeding, Petitioner’s Reply, Paper 18, at 2-6.

Horie Renders the Claims Obvious Without Modification

- Dr. Akl's unrebutted testimony explains what a POSITA would have understood based on Horie

- "These differences between the channels described in Horie would have suggested to a person of ordinary skill in the art that separate lines of communication could be employed in Horie's system for the sending/receiving of requests and notifications." Ex. 1003 ¶ 229.

- Unification Techs. LLC v. Micron Tech., Inc., 2024 WL 3738401, at *6.

'310 Proceeding, Petitioner's Reply, Paper 14, at 7-10.
'564 Proceeding, Petitioner's Reply, Paper 18, at 2-6.

Horie Anticipates & Renders Obvious Claims 1-9 of the ’564 Patent

Horie Anticipates the Claims of the ’564 Patent

’564 Patent, Claim 1 Preamble	Horie
1. A method for processing a transaction, comprising the steps of:	“…relates to a card usage status notification method that automatically notifies a card user, etc. that a card payment transaction has occurred via a network, and a card payment transaction system using the same method.” Ex. 1006, at [0001].

’564 Proceeding, Petition, Paper 1, at 21.

Horie Anticipates the Claims of the ’564 Patent

’564 Patent Claim 1[a]	Horie
receiving a request for authorizing a transaction for an account, said request received via a first transmission channel, said request including at least an identification of the customer's account;	“when the process is started, card information, transaction details information, and other necessary information are sequentially read on the card transaction terminal device side.” Ex. 1006, at [0046].

’564 Proceeding, Petition, Paper 1, at 21-23.

Horie Anticipates the Claims of the ’564 Patent

’564 Patent Claim 1[a]	Horie
receiving a request for authorizing a transaction for an account, said request received via a first transmission channel, said request including at least an identification of the customer's account;	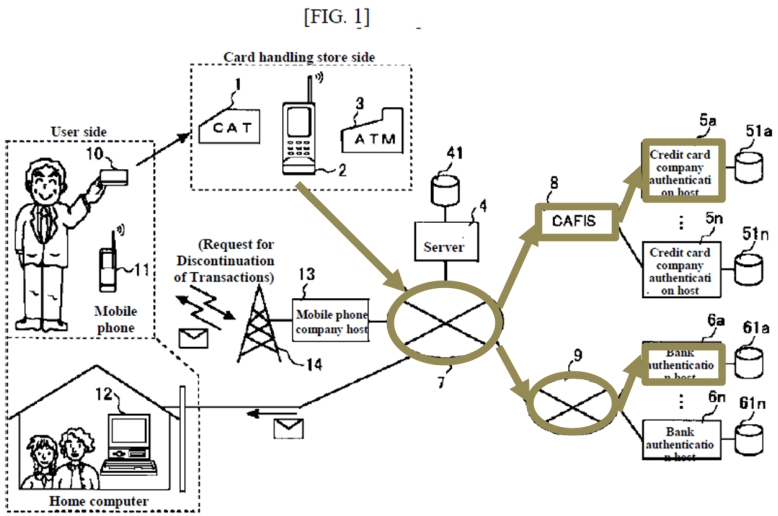 Ex. 1006, Fig. 1 (annotated).

’564 Proceeding, Petition, Paper 1, at 21-23.

Horie Anticipates the Claims of the ’564 Patent

’564 Patent Claim 1[b]	Horie
determining whether or not the account includes a request for notification to the customer of any transactions;	“a predetermined file is called for determining whether or not to notify the user of the card payment transaction . . . .” Ex. 1006, at [0057].

’564 Proceeding, Petition, Paper 1, at 24.

Horie Anticipates the Claims of the ’564 Patent

’564 Patent Claim 1[c]	Horie
notifying the customer via a second transmission channel only if the account includes a request for notification of any transactions;	“if the email notification service has been applied for (step 310 YES), a request for email transmission processing is made to the server 4 via the network 7 (step 311).” Ex. 1006, at [0059].

’564 Proceeding, Petition, Paper 1, at 24-26.

Horie Anticipates the Claims of the ’564 Patent

’564 Patent Claim 1[c]	Horie
notifying the customer via a second transmission channel only if the account includes a request for notification of any transactions;	[FIG. 1] 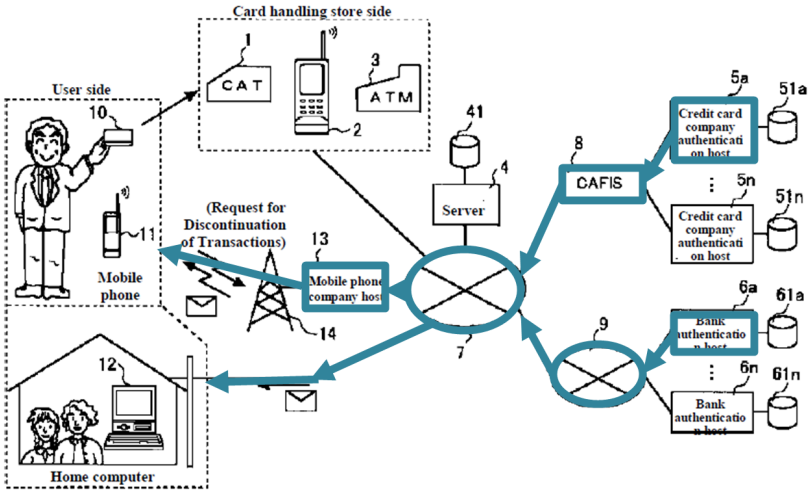 Ex. 1006, Fig. 1(annotated).

’564 Proceeding, Petition, Paper 1, at 24-26.

Horie Anticipates the Claims of the ’564 Patent

’564 Patent Claim 1[d]: the second transmission channel being distinct from the first transmission channel; and

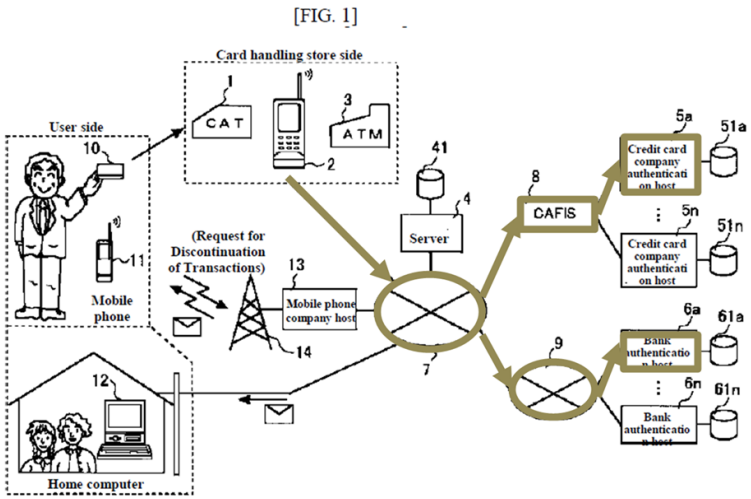

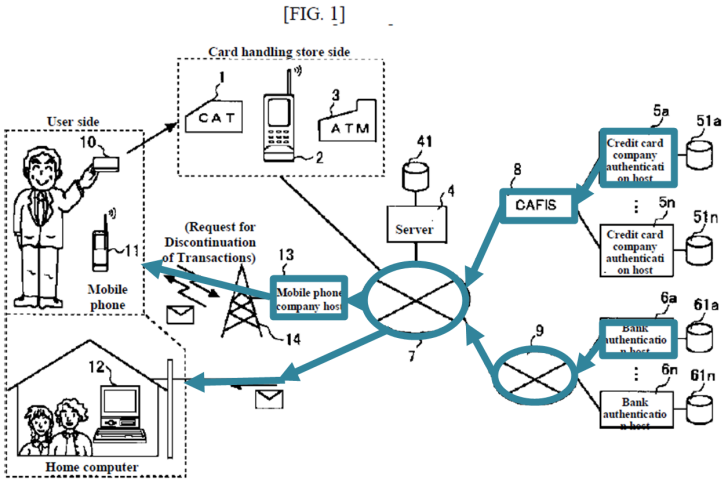

Ex. 1006, Fig. 1(annotated).

’564 Proceeding, Petition, Paper 1, at 26-29.

Horie Anticipates the Claims of the ’564 Patent

’564 Patent Claim 1[e]	Horie
authorizing the transaction without requiring a response from the customer.	“…although an e-mail is sent to notify the user after the card authentication process in the card payment transaction, the e-mail can also be sent, for example, during the card authentication process. In such a case, for example, it would be possible to prevent fraudulent card use by making it possible to issue a transaction cancellation request to the authentication hosts 5 to 6 via the mobile phone 11.” Ex. 1006, at [0073].

’564 Proceeding, Petition, Paper 1, at 28-29.

Horie Anticipates & Renders Obvious Claims 1-2 of the ’706 Patent

Horie Anticipates Claims 1-2 of the ’706 Patent

’706 Patent, Claim 1 Preamble	Horie
1. A payment authorization method, which comprises:	“…relates to a card usage status notification method that automatically notifies a card user, etc. that a card payment transaction has occurred via a network, and a card payment transaction system using the same method.” Ex. 1006, at [0001].

’706 Proceeding, Petition, Paper 1, at 22.

Horie Anticipates Claims 1-2 of the ’706 Patent

’706 Patent Claim 1[a]	Horie
gathering, at a merchant's, account information for payment of a customer's purchase;	“when the process is started, card information, transaction details information, and other necessary information are sequentially read on the card transaction terminal device side” Ex. 1006, at [0001].

’706 Proceeding, Petition, Paper 1, at 22-23.

Horie Anticipates Claims 1-2 of the ’706 Patent

’706 Patent Claim 1[b]	Horie
transmitting an authorization request from the merchant's to a financial authorization system requesting payment authorization for the customer's purchase;	“[t]he various types of information that have been read are sent as data to each card authentication host 5-6 (or CAFIS 8), thereby issuing a card authentication processing request (step 204).” Ex. 1006, at [0048].

’706 Proceeding, Petition, Paper 1, at 23-24.

Horie Anticipates Claims 1-2 of the ’706 Patent

’706 Patent Claim 1[c]	Horie
checking whether or not a profile is present with regard to the customer and, if the profile is present, checking whether or not the customer has requested notification regarding the authorization request;	“In step 309, a predetermined file is called for determining whether or not to notify the user of the card payment transaction via e-mail (step 309).” Ex. 1006, at [0057].

’706 Proceeding, Petition, Paper 1, at 24-25.

Horie Anticipates Claims 1-2 of the ’706 Patent

’706 Patent Claim 1[d]	Horie
if the customer has requested notification, notifying the customer that the authorization request has been received by transmitting a notification to a cell phone or a cellular network-connected communications device associated with the customer; and	“when a card payment transaction occurs, the user is automatically notified of the transaction via a wireless information terminal device such as a pre-specified mobile phone.” Ex. 1006, at [0018].

’706 Proceeding, Petition, Paper 1, at 26-27.

Horie Anticipates Claims 1-2 of the ’706 Patent

’706 Patent Claim 1[e]	Horie
processing the transaction for payment authorization and, if the purchase is authorized, notifying the merchant substantially contemporaneously with the step of transmitting the notification to the cell phone or the communications device associated with the customer.	“when using card payment transactions, both normal card authentication processing and card usage status notification via email are performed simultaneously.” Ex. 1006, at [0043].

’706 Proceeding, Petition, Paper 1, at 27-28.

Horie & Kobayashi Render Obvious Claims 3-5 of the ’706 Patent

Horie & Kobayashi Render Obvious Claims 3-5 of the ’706 Patent

’706 Patent Claim 5, Preamble	Horie
5. A charge card processing method, which comprises:	“…relates to a card usage status notification method that automatically notifies a card user, etc. that a card payment transaction has occurred via a network, and a card payment transaction system using the same method.” Ex. 1006, at [0001].

’706 Proceeding, Petition, Paper 1, at 36-37.

Horie & Kobayashi Render Obvious Claims 3-5 of the ’706 Patent

’706 Patent Claim 5[a]	Horie
inputting a transaction request to a stationary merchant terminal disposed at a merchant location;	“when [a] card 10 owned by a card user is used for payment transactions via card transaction terminal devices 1 to 3, card authentication processing is performed between card transaction terminal devices 1 to 3 and each authentication host via CAFIS 8, and an email is sent from the side of sever 4 to the mobile phone 11 owned by the card user and the PC 12 owned by the card user at home to notify the user that there was a card payment transaction.” Ex. 1006, at [0044].

’706 Proceeding, Petition, Paper 1, at 37-38.

Horie & Kobayashi Render Obvious Claims 3-5 of the ’706 Patent

’706 Patent Claim 5[b]	Horie
processing the transaction request with the merchant terminal, including a transmission of a first authorization request to a remote processing facility and receipt of a notification that authorization has been accepted or declined;	“As shown in Fig. 3, based on the authentication processing request from the side of the card transaction terminal device, card information, transaction content information, and other necessary information transmitted from the side of the card transaction terminal device are sequentially received and loaded on the side of the card authentication host (steps 301, 302, and 303).” Ex. 1006, at [0053].

’706 Proceeding, Petition, Paper 1, at 38-41.

Horie & Kobayashi Render Obvious Claims 3-5 of the ’706 Patent

’706 Patent Claim 5[c]	Kobayashi
transmitting a second authorization request from a remote processing facility to a mobile communications device of a customer associated with the requested transaction through a cellular network; and	“[t]he user enters the card acceptability input (number and #, etc. agreed with the card company) from the mobile phone 6 (Step S11). The input information indicating whether the card can be used or not may be a number determined at the time of card creation (for example, 1 for usable and 0 for unusable), or a predetermined operation button.” Ex. 1007, at [0052].

’706 Proceeding, Petition, Paper 1, at 41-44.

Horie & Kobayashi Render Obvious Claims 3-5 of the ’706 Patent

’706 Patent Claim 5[d]	Horie & Kobayashi
authorizing the requested transaction only if authorization has been accepted for the first authorization request and a proper response has been received by the remote processing facility to the second authorization request.	“when card 10 owned by a card user is used for payment transactions via card transaction terminal devices 1 to 3, card authentication processing is performed between card transaction terminal devices 1 to 3 and each authentication host via CAFIS 8…” Ex. 1006, at [0044]. “[t]he center 1 judges the card usage permission information transmitted from the mobile phone 6, determines whether the card can be used (step S12), and notifies the member store terminal 2 of the determination result of the usage permission.” Ex. 1007, at [0052].

’706 Proceeding, Petition, Paper 1, at 41-44.

Kano Anticipates & Renders Obvious Claims 6-7 of the ’706 Patent

Kano Anticipates Claims 6-7 of the ’706 Patent

’706 Patent Claim 6, Preamble	Kano
6. A charge processing method, which comprises:	“[t]he present invention relates to a commercial transaction method, a commercial transaction device and a commercial transaction system that can be sued for payment of products purchased at various stores such as supermarkets, electronic stores, opened on Internet servers, or vending machines such as for potable drinking water, using terminals that can be connected to a network such as via mobile phones.” Ex. 1011, at 7:51-8:3.

’706 Proceeding, Petition, Paper 1, at 46-47.

Kano Anticipates Claims 6-7 of the ’706 Patent

’706 Patent Claim 6[a]	Kano
preauthorizing an imminent given transaction by transmitting a preauthorization for the imminent given transaction from a customer to a financial authorization system;	“the user (product purchaser) sets the mobile phone 1 that he or she owns to the mobile shopping mode, and then uses the input means 14 to enter the store ID as the identification information of the store from which he or she intends to purchase the product. The user then inputs his or her personal ID number . . ., the payment method, and the purchase price of the product (step 1001).” Ex. 1011, at 14:33-37.

’706 Proceeding, Petition, Paper 1, at 47-49.

Kano Anticipates Claims 6-7 of the ’706 Patent

’706 Patent Claim 6[b]	Kano
subsequently inputting a transaction request concerning the given transaction at a merchant terminal disposed at a merchant location;	“the user presents the pre-selected desired product to the store staff at the store terminal 22 and places an order for the desired product (step 1007). The store staff enters the price of the desired purchase item using the store terminal (step 1008).” Ex. 1011, at 15:20-22.

’706 Proceeding, Petition, Paper 1, at 49-50.

Kano Anticipates Claims 6-7 of the ’706 Patent

’706 Patent Claim 6[c]	Kano
processing the transaction request at the merchant terminal, including a transmission of an authorization request for the given transaction to the financial authorization system;	“The store terminal 22 then sends the mobile phone serial number, the mobile phone number, and the QR authorized certification key 1201 read from the mobile phone 1 to the authentication server 41 as a payment approval request.” Ex. 1011, at 15:28-30.

’706 Proceeding, Petition, Paper 1, at 51-53.

Kano Anticipates Claims 6-7 of the ’706 Patent

’706 Patent Claim 6[d]	Kano
transmitting a response to the authorization request from the financial authorization system to the merchant terminal, and thereby authorizing the transaction request at the merchant's if the preauthorization from the customer is available in the financial authorization system, and otherwise contacting the customer for authorization or declining the authorization request.	“in the event that both the mobile phone serial number and the mobile phone number are legitimate, and the information (all or part) on the QR authorized certification key 1201 received from the store terminal 22 is recognized as a genuine one issued by the store terminal 22, the authentication server 41 returns the detailed settlement approval to the store terminal 22.” Ex. 1011, at 15:47-50.

’706 Proceeding, Petition, Paper 1, at 53-56.