US 20070008791A1

(19) United States

(12) Patent Application Publication

(10) Pub. No.: US 2007/0008791 A1

(43) Pub. Date: Jan. 11, 2007

Butt et al.

(54) DQS STROBE CENTERING (DATA EYE TRAINING) METHOD

(75) Inventors: **Derrick Sai-Tang Butt**, San Leandro, CA (US); **Hui-Yin Seto**, San Jose, CA (US)

Correspondence Address:
LSI LOGIC CORPORATION
1621 BARBER LANE
MS: D-106
MILPITAS, CA 95035 (US)

(73) Assignee: LSI LOGIC CORPORATION

(21) Appl. No.: 11/176,041

(22) Filed: Jul. 7, 2005

Publication Classification

(51) Int. Cl.

G11C	*7/00*	(2006.01)
G11C	*8/00*	(2006.01)
G06F	*13/00*	(2006.01)
G06F	*13/28*	(2006.01)
G06F	*12/00*	(2006.01)
G06F	*1/12*	(2006.01)
H04L	*7/00*	(2006.01)
G06F	*13/42*	(2006.01)
H04L	*5/00*	(2006.01)

(52) U.S. Cl. **365/193**; 365/194; 365/233; 711/167; 713/401

(57) ABSTRACT

A method for calibrating a data valid window including the steps of: (A) setting a base delay of one or more datapaths to a predetermined value, (B) determining an optimum offset delay value for each of the one or more datapaths based upon actual memory accesses and (C) delaying a read data strobe signal based upon the base delay and the optimum offset delay value for each of the one or more datapaths.

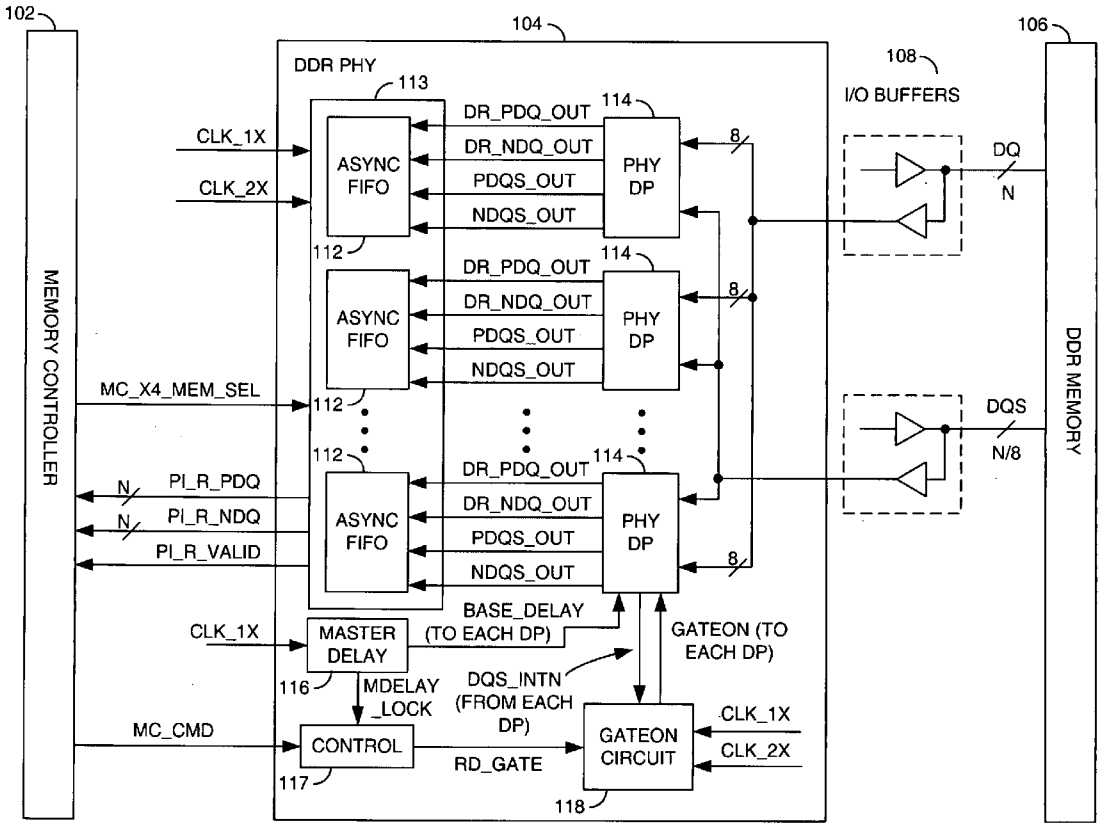

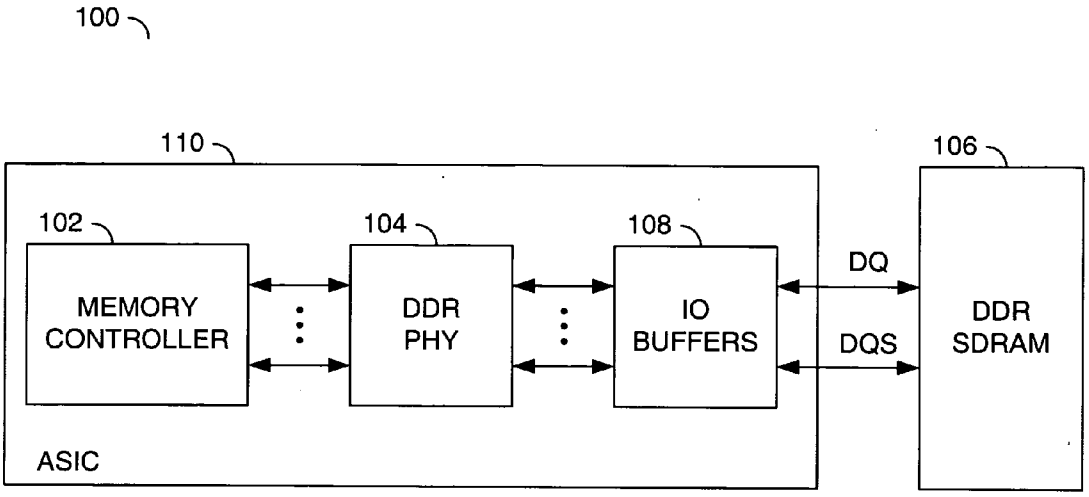
100
110
106
102
104
108
MEMORY CONTROLLER
DDR PHY
IO BUFFERS
DQ
DQS
DDR SDRAM
ASIC

FIG. 1

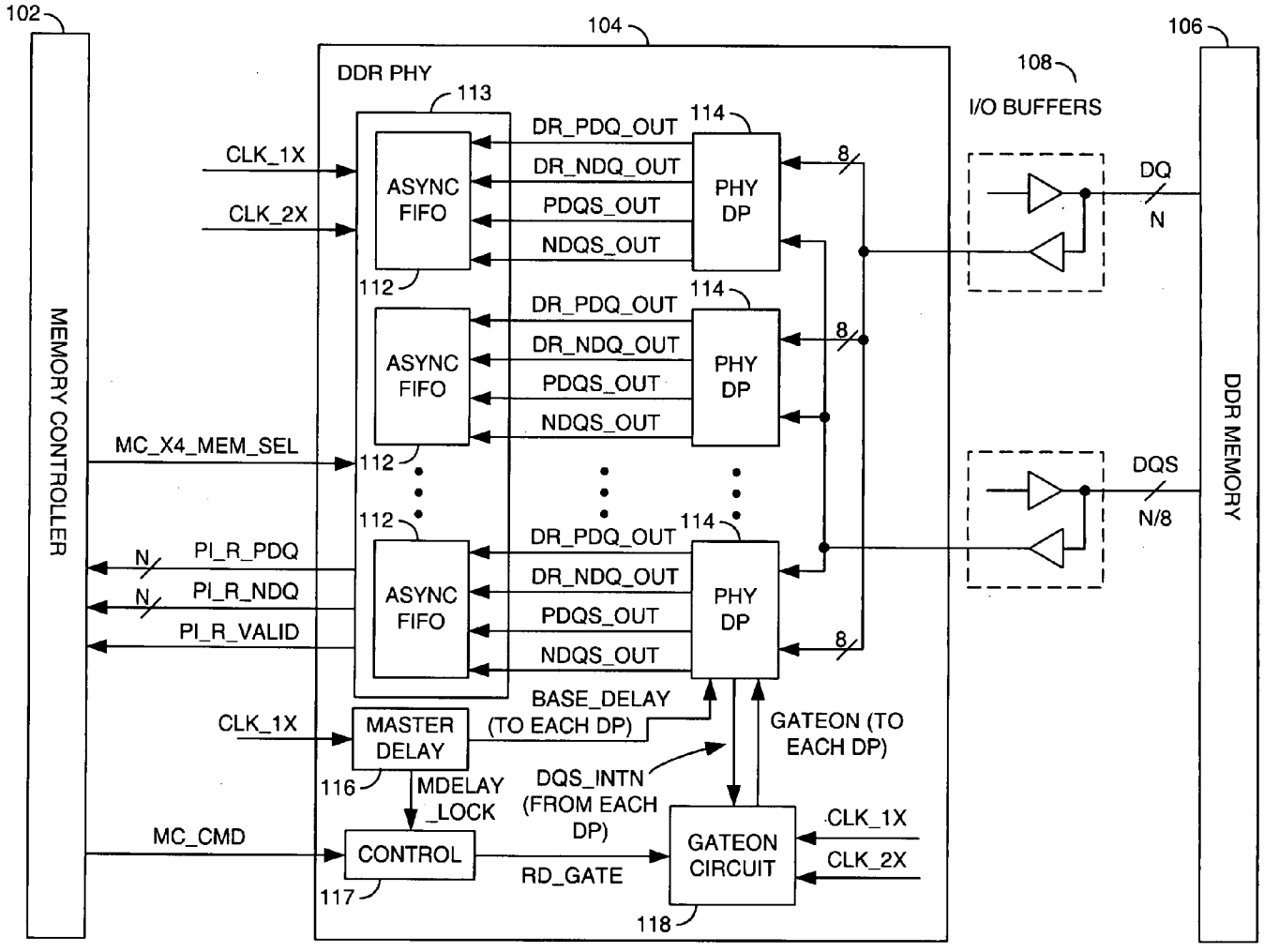
102
MEMORY CONTROLLER
104
DDR PHY
113
CLK_1X
CLK_2X
ASYNC FIFO
112
DR_PDQ_OUT
DR_NDQ_OUT
PDQS_OUT
NDQS_OUT
114
PHY DP
8
MC_X4_MEM_SEL
N
PI_R_PDQ
PI_R_NDQ
PI_R_VALID
BASE_DELAY (TO EACH DP)
GATEON (TO EACH DP)
MASTER DELAY
116
MDELAY _LOCK
DQS_INTN (FROM EACH DP)
MC_CMD
CONTROL
117
RD_GATE
GATEON CIRCUIT
118
108
I/O BUFFERS
DQ
DQS
N/8
106
DDR MEMORY

FIG. 2

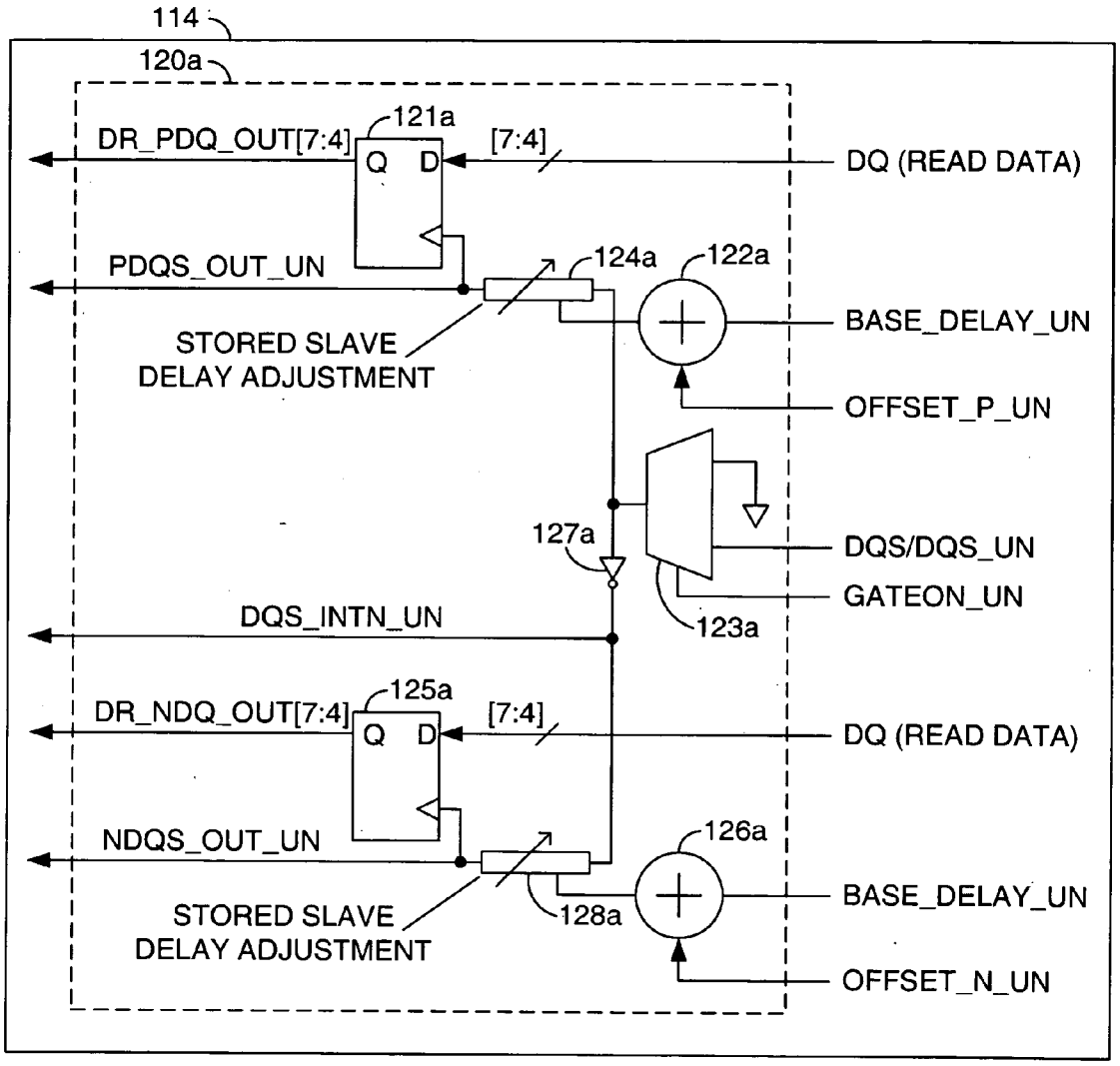
114
120a
121a
DR_PDQ_OUT[7:4]
Q
D
[7:4]
DQ (READ DATA)
PDQS_OUT_UN
124a
122a
BASE_DELAY_UN
STORED SLAVE
DELAY ADJUSTMENT
OFFSET_P_UN
127a
DQS/DQS_UN
GATEON_UN
123a
DQS_INTN_UN
125a
DR_NDQ_OUT[7:4]
Q
D
[7:4]
DQ (READ DATA)
NDQS_OUT_UN
126a
128a
BASE_DELAY_UN
STORED SLAVE
DELAY ADJUSTMENT
OFFSET_N_UN

FIG. 3A

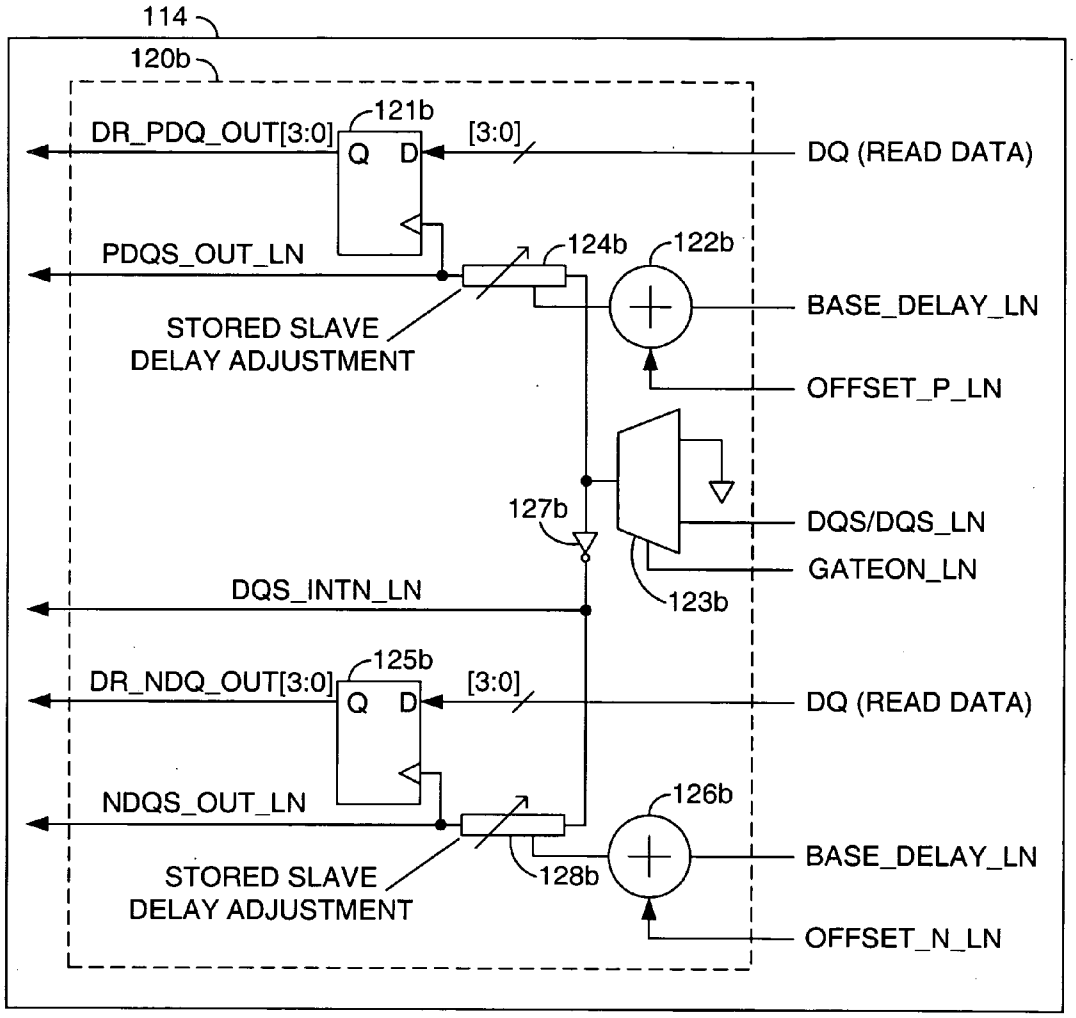
114
120b
121b
DR_PDQ_OUT[3:0]
Q
D
[3:0]
DQ (READ DATA)
PDQS_OUT_LN
124b
122b
BASE_DELAY_LN
STORED SLAVE
DELAY ADJUSTMENT
OFFSET_P_LN
127b
DQS/DQS_LN
GATEON_LN
123b
DQS_INTN_LN
125b
DR_NDQ_OUT[3:0]
Q
D
[3:0]
DQ (READ DATA)
NDQS_OUT_LN
126b
BASE_DELAY_LN
128b
STORED SLAVE
DELAY ADJUSTMENT
OFFSET_N_LN

FIG. 3B

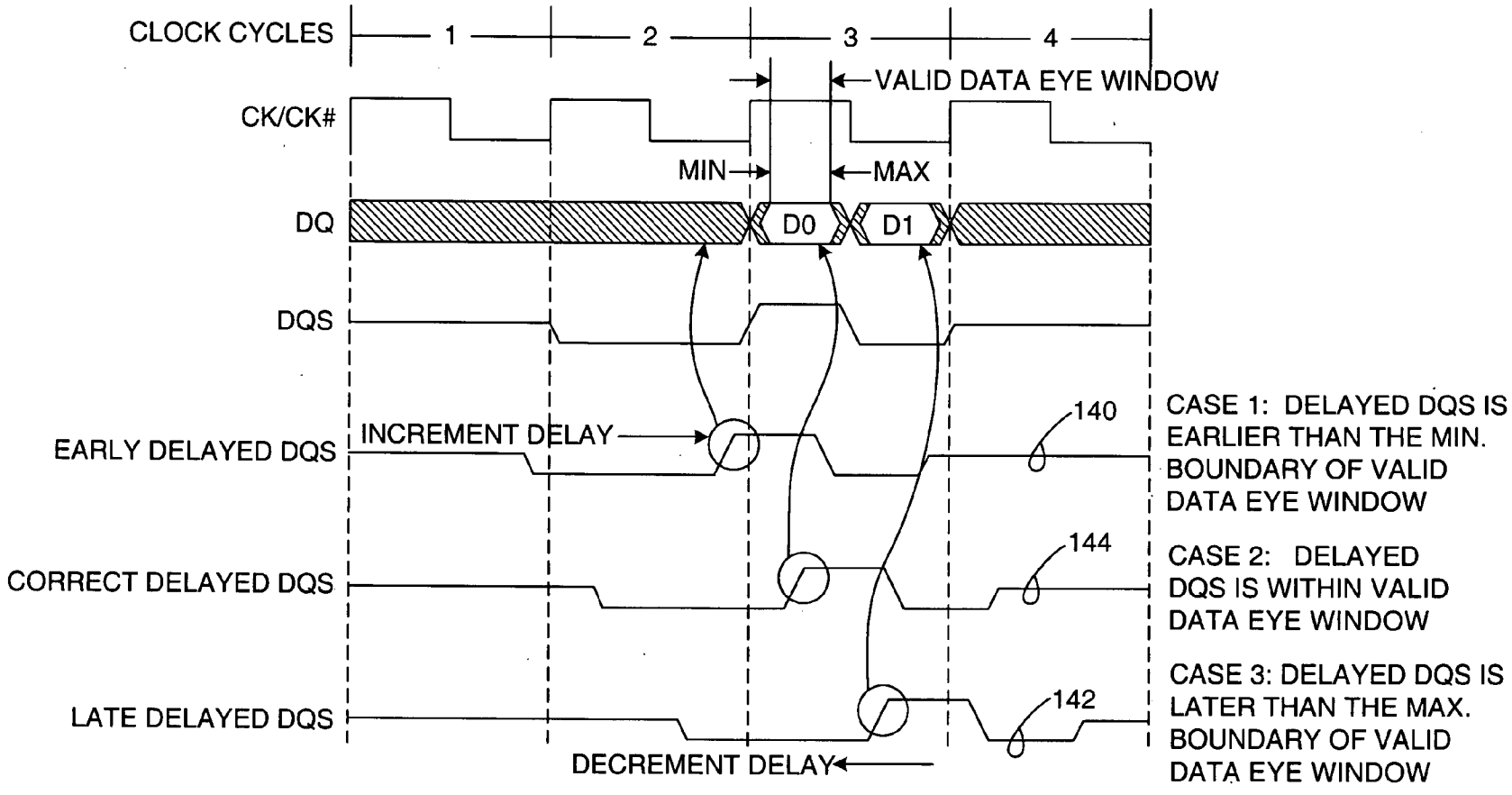
CLOCK CYCLES
1
2
3
4
VALID DATA EYE WINDOW
CK/CK#
MIN
MAX
DQ
D0
D1
DQS
EARLY DELAYED DQS
INCREMENT DELAY
140
CASE 1: DELAYED DQS IS EARLIER THAN THE MIN. BOUNDARY OF VALID DATA EYE WINDOW
CORRECT DELAYED DQS
144
CASE 2: DELAYED DQS IS WITHIN VALID DATA EYE WINDOW
LATE DELAYED DQS
142
CASE 3: DELAYED DQS IS LATER THAN THE MAX. BOUNDARY OF VALID DATA EYE WINDOW
DECREMENT DELAY

FIG. 4

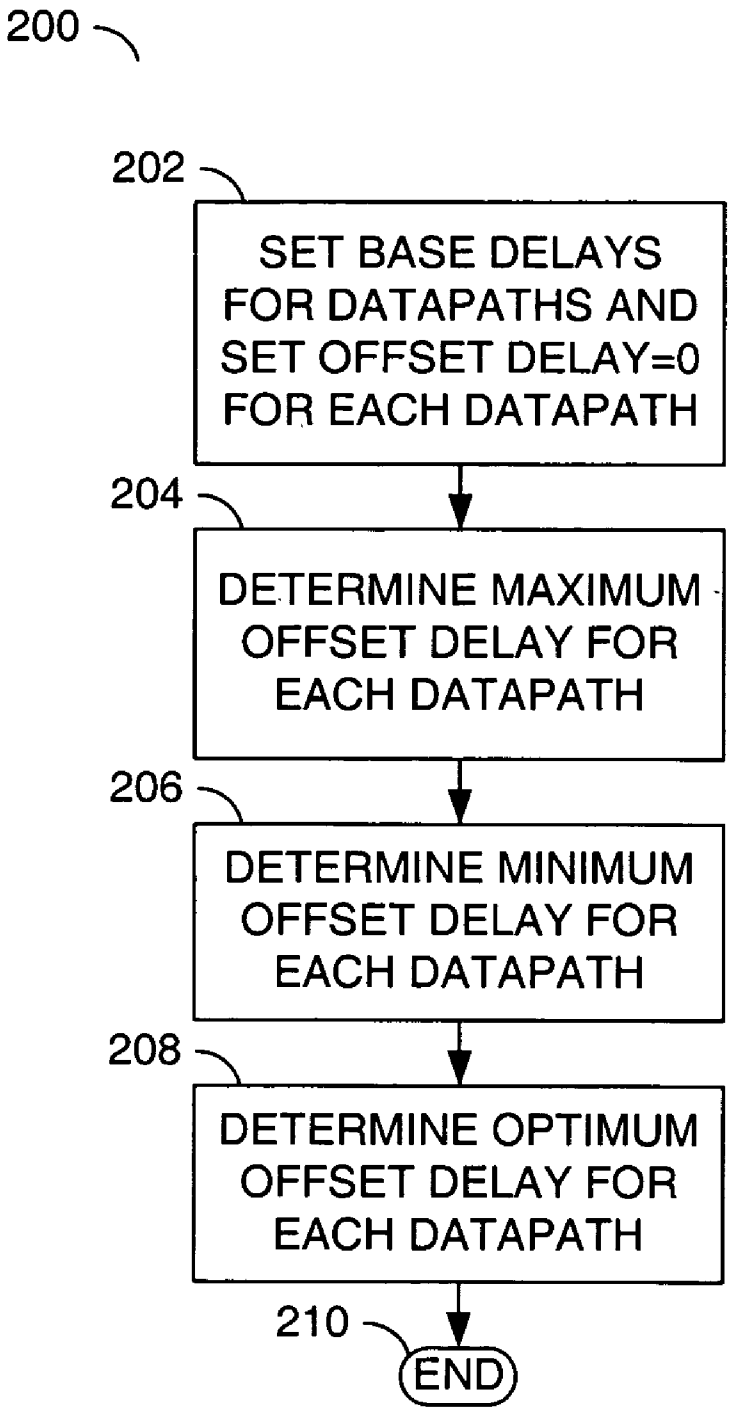
200
202
SET BASE DELAYS FOR DATAPATHS AND SET OFFSET DELAY=0 FOR EACH DATAPATH
204
DETERMINE MAXIMUM OFFSET DELAY FOR EACH DATAPATH
206
DETERMINE MINIMUM OFFSET DELAY FOR EACH DATAPATH
208
DETERMINE OPTIMUM OFFSET DELAY FOR EACH DATAPATH
210
END

FIG. 5

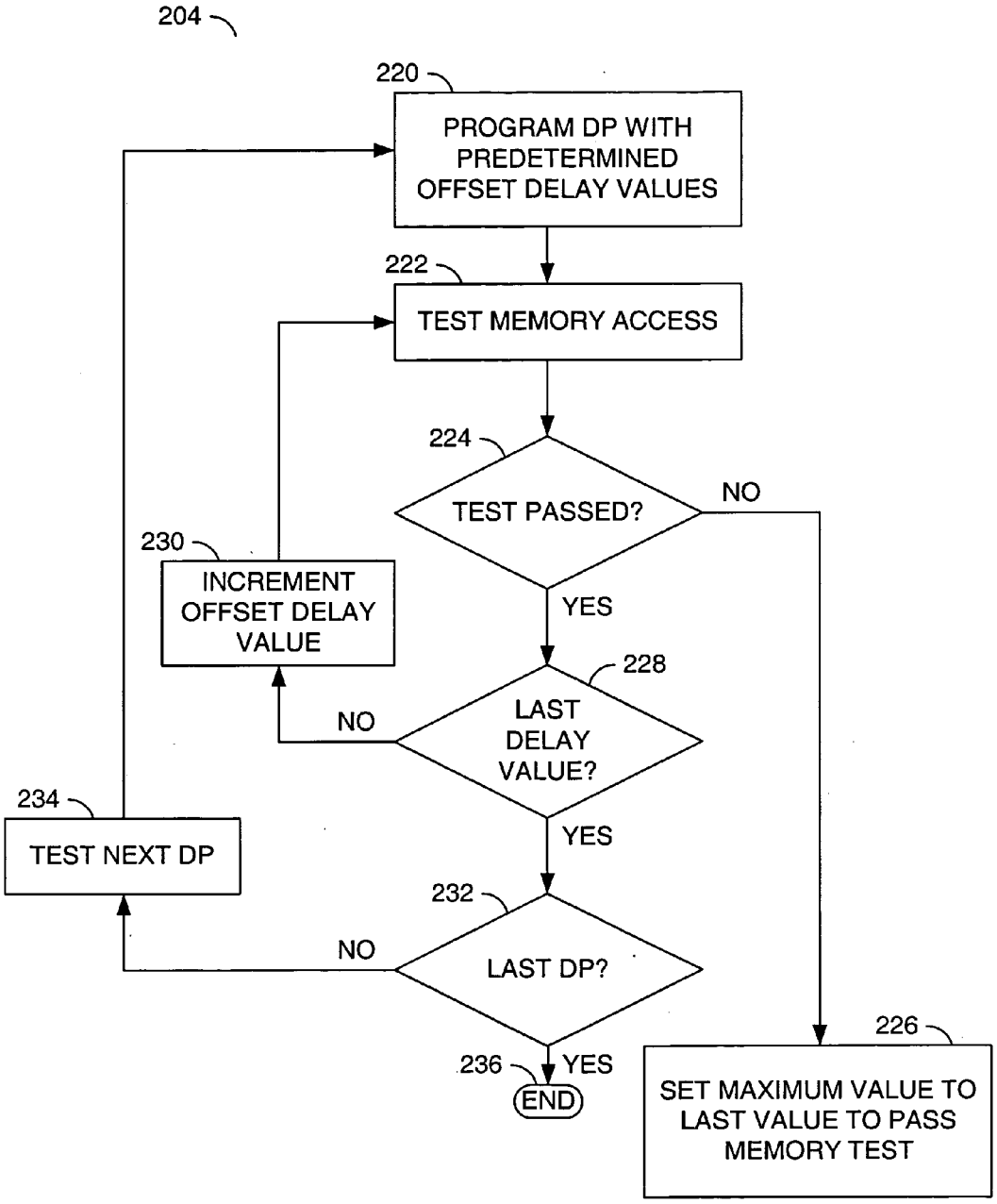
204
220
PROGRAM DP WITH PREDETERMINED OFFSET DELAY VALUES
222
TEST MEMORY ACCESS
224
TEST PASSED?
NO
YES
230
INCREMENT OFFSET DELAY VALUE
228
LAST DELAY VALUE?
NO
YES
234
TEST NEXT DP
232
LAST DP?
NO
YES
236
END
226
SET MAXIMUM VALUE TO LAST VALUE TO PASS MEMORY TEST

FIG. 6

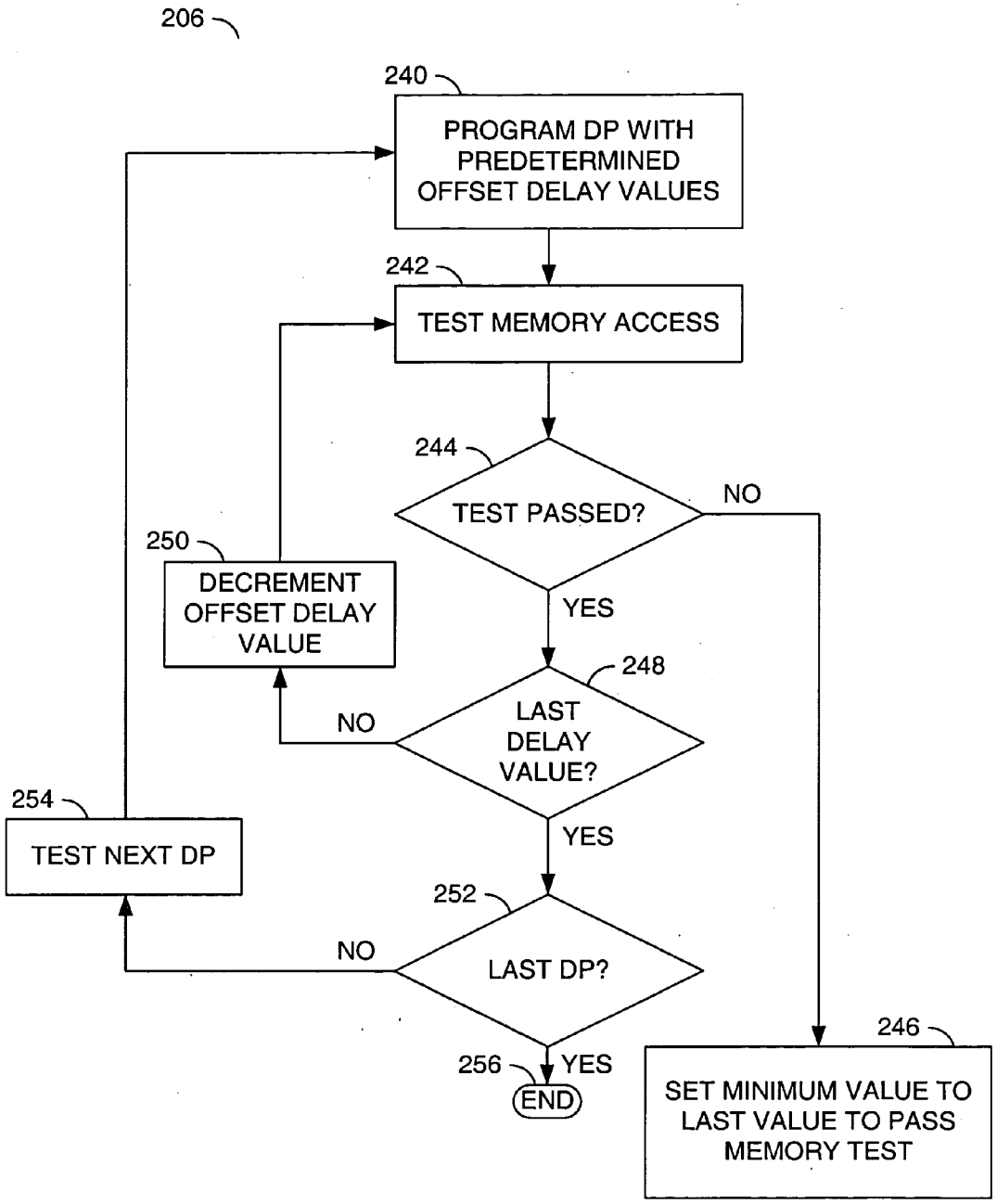
206
240
PROGRAM DP WITH PREDETERMINED OFFSET DELAY VALUES
242
TEST MEMORY ACCESS
244
TEST PASSED?
NO
YES
250
DECREMENT OFFSET DELAY VALUE
248
LAST DELAY VALUE?
NO
YES
254
TEST NEXT DP
252
LAST DP?
NO
YES
256
END
246
SET MINIMUM VALUE TO LAST VALUE TO PASS MEMORY TEST

FIG. 7

DQS STROBE CENTERING (DATA EYE TRAINING) METHOD

CROSS REFERENCE TO RELATED APPLICATIONS

[0001] The present application may relate to co-pending U.S. application Ser. No. 11/097,903, filed Apr. 1, 2005, U.S. application Ser. No. 11/154,401, filed Jun. 16, 2005, U.S. application Ser. No. _____ (Attorney Docket No. 1496.00415/04-2000), filed Jun. 24, 2005, and U.S. application Ser. No. _____ (Attorney Docket No. 1496.00419/04-2044), filed Jul. 1, 2005, which are each hereby incorporated by reference in their entirety.

FIELD OF THE INVENTION

[0002] The present invention relates to memory systems generally and, more particularly, to a method and/or apparatus DQS strobe centering (or data eye training) that may be suitable for a DDR memory application.

BACKGROUND OF THE INVENTION

[0003] A double data rate (DDR) synchronous dynamic random access memory (SDRAM) interface receives aligned data (DQ) and read data strobe (DQS) signals from a DDR SDRAM device. The DDR SDRAM interface is responsible for providing the appropriate DQ-DQS relationship. A conventional approach performs system-level timing analysis using a simulation program for integrated circuit emphasis (SPICE) to determine a timing that yields adequate setup and hold time margin within a data valid window. The conventional approach is not programmable and can vary for different hardware implementations. The conventional approach does not calibrate the actual data valid window in silicon. The conventional approach relies heavily on the pre-silicon, system-level, SPICE timing analysis.

[0004] It would be desirable to have a read data strobe centering (or data eye training) method for calibrating the actual data valid window.

SUMMARY OF THE INVENTION

[0005] The present invention concerns a method for calibrating a data valid window comprising the steps of: (A) setting a base delay of one or more datapaths to a predetermined value, (B) determining an optimum offset delay value for each of the one or more datapaths based upon actual memory accesses and (C) delaying a read data strobe signal based upon the base delay and the optimum offset delay value for each of the one or more datapaths.

[0006] The objects, features and advantages of the present invention include providing a method for read data strobe centering (data eye training) that may (i) provide a systematic process for calibrating the center of a data valid window, (ii) enable an upper level memory controller function to perform run time calibration of the data valid window, (iii) be flexible and adaptable to various different system implementations, and/or (iv) eliminate reliance on a system level, pre-silicon, SPICE timing analysis on the data valid window.

BRIEF DESCRIPTION OF THE DRAWINGS

[0007] These and other objects, features and advantages of the present invention will be apparent from the following detailed description and the appended claims and drawings in which:

[0008] FIG. **1** is a block diagram illustrating a memory system in which an embodiment of the present invention may be implemented;

[0009] FIG. **2** is a more detailed block diagram of a read data logic and signal paths of a memory interface of FIG. **1**;

[0010] FIG. **3**(A-B) are more detailed block diagrams illustrating details of read data latching and gating;

[0011] FIG. **4** is a timing diagram illustrating various data and strobe signals of a DDR SDRAM interface;

[0012] FIG. **5** is a flow diagram illustrating a training process in accordance with a preferred embodiment of the present invention;

[0013] FIG. **6** is a more detailed flow diagram illustrating a process for determining a maximum offset delay value; and

[0014] FIG. **7** is a more detailed flow diagram of a process for determining a minimum offset delay value.

DETAILED DESCRIPTION OF THE PREFERRED EMBODIMENTS

[0015] Referring to FIG. **1**, a block diagram is shown illustrating a system **100** in which one or more preferred embodiments of the present invention may be implemented. In one example, the system **100** may comprise a circuit (or block) **102**, a circuit (or block) **104**, a circuit (or block) **106** and a circuit (or block) **108**. The circuit **102** may be implemented as a memory controller. The circuit **104** may be implemented as a memory interface. In one example, the circuit **104** may be implemented as a double data rate (DDR) physical layer (PHY) core. The circuit **106** may be implemented as one or more double data rate (DDR) synchronous dynamic random access memory (SDRAM) devices. The circuit **108** may be implemented, in one example, as stub series terminated logic (SSTL) IO buffers. The circuit **104** may be coupled between the circuit **102** and the circuit **106**. In one example, the circuit **104** may be coupled to the circuit **106** by the circuit **108**. The circuit **104** may be configured to receive a plurality of data signals (e.g., DQ) and a plurality of read data strobe signals (e.g., DQS). In one example, the plurality of read data strobe signals may comprise a single read data strobe for each byte of the signals DQ. In another example (e.g., an x4 mode), the plurality of data strobe signals DQS may comprise a separate strobe signal (e.g., DQS_UN and DQS_LN, respectively) for each nibble (e.g., upper and lower) of the signal DQ.

[0016] In one example, the circuits **102**, **104** and **108** may be implemented (or instantiated) on an application specific integrated circuit (ASIC) **110**. However, the circuit **102** may be implemented separately and mounted on a common printed circuit board (PCB) along with the circuits **104**, **106** and **108**. The ASIC **110** may be implemented, in one example, as a platform (or structured) ASIC. In one example, the circuit **104** may be implemented based on diffused datapath (DP) and master delay modules. In another example, the circuit **104** may be implemented based on R-cell datapath and master delay modules. In one example, the circuit **104** may be implemented in an R-cell transistor fabric of the ASIC **110**. As used herein, R-cell generally refer to an area of silicon containing one or more diffusions for forming the parts of N and/or P type transistors and the contact points where wires may be attached in subsequent

manufacturing steps (e.g., to power, ground, inputs and outputs). Wire layers may be added to the R-cell transistor fabric to make particular transistors, logic gates, soft and firm IP blocks and/or storage elements.

[0017] Referring to FIG. **2**, a more detailed block diagram of the circuit **104** is shown illustrating example read data logic and signal paths in which a preferred embodiment of the present invention may be implemented. In one example, the circuit **104** may comprise a number of asynchronous (ASYNC) first-in first-out (FIFO) buffers **112**, FIFO synchronization logic **113**, a number of physical read datapaths (DPs) **114**, a master delay (MDELAY) logic **116**, a control logic **117** and a programmable gating signal generator **118**. Each of the physical read datapaths **114** may be configured to receive (i) a respective portion of the read data signals DQ from the DDR memory **106**, (ii) a respective read data strobe signal or signals DQS associated with the respective portion of the received read data signals and (iii) a gating signal (e.g., GATEON) from the programmable gating signal generator **118**. Each of the physical read datapaths **114** may communicate with a corresponding one of the asynchronous FIFOs **112** via a number of signals (e.g., DR_PDQ_OUT, DR_NDQ_OUT, PDQS_OUT, and NDQS_OUT). In one example, separate signals (e.g., PDQS_OUT_UN, NDQS_OUT_UN, PDQS_OUT_LN, and NDQS_OUT_LN) may be generated for each nibble of the DPs **114**. In one example, the asynchronous FIFOs **112** may be configured to interface the physical read datapaths **114** with the memory controller **102**.

[0018] In general, the signals DQ and DQS may be presented to the DDR PHY **104** on a number of buses. The signals DQ and DQS may be broken out to multiple instantiations of DP hardmacros. The DPs may be configured via internal settings to delay the read data strobe signals DQS based on one or more control signals (or values) from the MDELAY circuit **116**. Each of the DPs **114** may be configured to present the DQ data to a respective asynchronous FIFO **112** via the signals DR_PDQ_OUT and DR_NDQ_OUT, after the data is sampled using the delayed read data strobe signals DQS.

[0019] The FIFOs **112** are generally configured to transfer the read data DQ from the read data strobe (or DQS) domain to the CLK_1X domain for presentation to the memory controller **102**. The read data DR_PDQ_OUT and DR_NDQ_OUT are generally written to the FIFOs **112** in response to (e.g., clocked by) the signals PDQS_OUT and NDQS_OUT, respectively). The memory controller **102** may be configured to read the data DQ (e.g., via signals PI_R_PDQ and PI_R_NDQ) from the FIFOs **112** in response to the clock signal CLK_1X. In one example, the FIFOs **112** may be implemented as eight words deep.

[0020] As briefly described above, the read datapaths **114** are generally programmable from when the data/strobe pairs DQ/DQS are received at the input to the circuit **104**, to sampling the read data with the read data strobe signal DQS, and passing the data to the memory controller **102**. The programmability of the read datapaths **114** generally provides flexibility for handling different column address strobe (CAS) latencies, burst lengths, device process variation, and/or propagation delays.

[0021] The master delay (MDELAY) logic **116** is generally configured to calculate a delay value for generating a one-quarter cycle or one-fifth cycle delay with respect to the device reference clock (e.g., the signal CLK_1X). The calculated delay is generally used by the datapaths **114** to center a read data capture clock (e.g., the signal DQS) in a valid DDR device read data window. The calculated delay generally tracks process, voltage and temperature (PVT) corners for reliable read data latching. The MDELAY logic **116** may be configured to generate the one-quarter cycle or one-fifth cycle delay using a delay lock loop (DLL). Once the DLL is locked to the clock signal CLK_1X, a signal (e.g., MDELAY_LOCK) may be generated indicating the locked state. The signal MDELAY_LOCK may be presented to an input of the control logic **117** and/or the memory controller **102**.

[0022] The MDELAY logic **116** may be configured to generate one or more control signals (or values) for transferring the delay settings (or values) to one or more slave delay cells (describe in more detail in connection with FIGS. **3**A and **3**B) in each of the DPs **114**. The delay values, when transferred to each of the DPs **114**, are generally referred to as base delays. In one example, a base delay may be implemented for each nibble of each DP byte. For example, a first base delay value (e.g., BASE_DELAY_UN) may be implemented for each upper nibble and a second base delay value (e.g., BASE_DELAY_LN) may be implemented for each lower nibble. The DPs **114** may also be programmed with offset delay values corresponding to each nibble (e.g., OFFSET_P_UN, OFFSET_N_UN, OFFSET_P_LN and OFFSET_N_LN). In one example, each of the DPs **114** may have a set of base delays that are independent of the other DPs **114**. The offset delay values may be added to or subtracted from the respective base delay values.

[0023] The control circuit **117** may be configured to generate one or more control signals for controlling and/or configuring the FIFOs **112** and datapaths **114**. In one example, the control circuit **117** may be configured to generate a gating signal (e.g., RD_GATE) in response to a signal (e.g., MC_CMD) received from the controller **102**. In one example, the circuit **117** may be configured to generate the signal RD_GATE in response to decoding a READ command in the signal MC_CMD. The signal RD_GATE is generally configured to prevent invalid states (e.g., when DQS is in a 3-state, or OFF, mode) from entering the circuit **113**. The signal RD_GATE may be used to generate one or more gating signals.

[0024] The programmable gateon generating circuit **118** may be configured to generate the signal GATEON in response to the signal RD_GATE, a first clock signal (e.g., CLK_1X), a second clock signal (e.g., CLK_{13} 2X) and a data strobe signal (e.g., DQS_INTN) received from the DPs **114**. The signal GATEON may be used to gate the read data strobe signal DQS received from the memory device **106**. In one example, separate gating signals (e.g., GATEON_UN, GATEON_LN, etc.) may be generated for each nibble of the DPs **114**. The signal DQS_INTN may be used to de-assert the signal GATEON. In one example, separate signals (e.g., DQS_INTN_UN and DQS_INTN_LN) may be generated for each nibble of the DPs **114**. Although the circuit **118** is shown implemented separately from the DPs **114**, it will be understood by those skilled in the art that the circuit **118** may be implemented as part of the DPs **114** (e.g., the signal GATEON may be generated within the DPs **114** or external to the DPs **114**).

[0025] Referring to FIGS. **3**(A-B), more detailed block diagrams of a datapath **114** of FIG. **2** are shown illustrating an example read data latching and gating circuit in accordance with a preferred embodiment of the present invention. In one example, each datapath **114** may comprise an upper nibble pathway **120***a* (FIG. **3**A) and a lower nibble pathway **120***b* (FIG. **3**B). The upper nibble pathway **120***a* may have a first input that may receive a number of bits of the signal DQ (e.g., bits **7**:**4**), a second input that may receive the signal BASE_DELAY_UN, a third input that may receive the signal OFFSET_P_UN, a fourth input that may receive the signal OFFSET_N_UN, a fifth input that may receive the signal DQS (or the signal DQS_UN in the x4 mode), a sixth input that may receive a signal (e.g., GATEON_UN). The upper nibble pathway **120***a* may also have a first output that may present a number of bits (e.g., the signal DR_PDQ_OUT[**7**:**4**]), a second output that may present a number of bits (e.g., the signal DR_NDQ_OUT[**7**:**4**]), a third output that may present a signal (e.g., PDQS_OUT_UN), a fourth output that may present a signal (e.g., NDQS_OUT_UN) and a fifth output that may present a signal (e.g., DQS_INTN_UN).

[0026] The upper nibble pathway **120***a* may comprise a circuit (or block) **121***a*, a circuit (or block) **122***a*, a circuit (or block) **123***a*, a circuit (or block) **124***a*, a circuit (or block) **125***a*, a circuit (or block) **126***a*, a circuit (or block) **127***a* and a circuit (or block) **128***a*. The circuit **121***a* may be implemented as one or more registers. The circuit **122***a* may be implemented as an adder block. The circuit **123***a* may be implemented as a multiplexer circuit. The circuit **124***a* may be implemented as a slave delay adjustment block. The circuit **125***a* may be implemented as one or more registers. The circuit **126***a* may be implemented as an adder block. The circuit **127***a* may be implemented as an inverter circuit. The circuit **128***a* may be implemented as a slave delay adjustment block.

[0027] The circuit **121***a* may be configured to latch an upper nibble (e.g., bits **7**:**4**) of the read data signal DQ in response to a clock input. The circuit **121***a* may be further configured to present the latched read data as the signal DR_PDQ_OUT[**7**:**4**]. The circuit **122***a* may be configured to generate a sum (or difference) of the signals BASE_DELAY_UN and OFFSET_P_UN. The circuit **123***a* may be configured to select either the signal DQS (or the signal DQS_UN in the x4 mode) or a predetermined logic level (e.g., a LOW or logic 0) in response to the signal GATEON_UN. The circuit **124***a* may be configured to delay the signal presented by the circuit **123***a* based on the sum (or difference) generated by the circuit **122***a*. An output of the circuit **124***a* may present the signal PDQS_OUT_UN to the clock input of the circuit **121***a* and the third output of the upper nibble pathway **120***a*.

[0028] The circuit **125***a* may be configured to latch an upper nibble (e.g., bits **7**:**4**) of the read data signal DQ in response to a clock input. The circuit **125***a* may be further configured to present the latched read data as the signal DR_NDQ_OUT[**7**:**4**]. The circuit **126***a* may be configured to generate a sum (or difference) of the signals BASE_DELAY_UN and $OFFSET_N$_UN. The circuit **127***a* may be configured to generate the signal DQS_INTN_UN as a digital complement of the signal presented by the circuit **123***a*. The signal DQS_INTN_UN may be presented to an input of the circuit **128***a* and the fifth output of the upper nibble pathway **120***a*. The circuit **128***a* may be configured to generate the signal NDQS_OUT_UN by delaying the signal DQS_INTN_UN based on the sum (or difference) generated by the circuit **126***a*. An output of the circuit **128***a* may present the signal NDQS_OUT_UN to the clock input of the circuit **125***a* and the fourth output of the upper nibble pathway **120***a*.

[0029] The lower nibble pathway **120***b* may have a first input that may receive a number of bits (e.g., bits **3**:**0**) of the signal DQ, a second input that may receive the signal BASE_DELAY_LN, a third input that may receive the signal OFFSET_P_LN, a fourth input that may receive the signal OFFSET_N_LN, a fifth input that may receive the signal DQS (or the signal DQS_LN in the x4 mode), a sixth input that may receive a signal (e.g., GATEON_LN). The lower nibble pathway **120***b* may also have a first output that may present a number of bits (e.g., the signal DR_PDQ_OUT[**3**:**0**]), a second output that may present a number of bits (e.g., the signal DR_NDQ_OUT[**3**:**0**]), a third output that may present the signal PDQS_OUT_LN, a fourth output that may present the signal NDQS_OUT_LN and a fifth output that may present the signal DQS_INTN_LN.

[0030] The lower nibble pathway **120***b* may comprise a circuit (or block) **121***b*, a circuit (or block) **122***b*, a circuit (or block) **123***b*, a circuit (or block) **124***b*, a circuit (or block) **125***b*, a circuit (or block) **126***b*, a circuit (or block) **127***b* and a circuit (or block) **128***b*. The circuit **121***b* may be implemented as one or more registers. The circuit **122***b* may be implemented as an adder block. The circuit **123***b* may be implemented as a multiplexer circuit. The circuit **124***b* may be implemented as a slave delay adjustment block. The circuit **125***b* may be implemented as one or more registers. The circuit **126***b* may be implemented as an adder block. The circuit **127***b* may be implemented as an inverter circuit. The circuit **128***b* may be implemented as a slave delay adjustment block.

[0031] The circuit **121***b* may be configured to latch a lower nibble (e.g., bits **3**:**0**) of the read data signal DQ in response to a clock input. The circuit **121***b* may be further configured to present the latched read data as the signal DR_PDQ_OUT [**3**:**0**]. The circuit **122***b* may be configured to generate a sum (or difference) of the signals BASE_DELAY_LN and OFFSET_P_LN. The circuit **123***b* may be configured to select either the signal DQS (or the signal DQS_LN in the x4 mode) or a predetermined logic level (e.g., a LOW or logic 0) in response to the signal GATEON_LN. The circuit **124***b* may be configured to delay the signal presented by the circuit **123***b* based on the sum (or difference) generated by the circuit **122***b*. An output of the circuit **124***b* may present the signal PDQS_OUT_LN to the clock input of the circuit **121***b* and the third output of the lower nibble pathway **120***b*.

[0032] The circuit **125***b* may be configured to latch a lower nibble (e.g., bits **3**:**0**) of the read data signal DQ in response to a clock input. The circuit **125***b* may be further configured to present the latched read data as the signal DR_NDQ_OUT[**3**:**0**]. The circuit **126***b* may be configured to generate a sum (or difference) of the signals BASE_DELAY_LN and OFFSET_N_LN. The circuit **127***b* may be configured to generate the signal DQS_INTN_LN as a digital complement of the signal presented by the circuit **123***b*. The signal DQS_INTN_LN may be presented to an input of the circuit **128***b* and the fifth output of the lower

nibble pathway **120***b*. The circuit **128***b* may be configured to generate the signal NDQS_OUT_LN by delaying the signal DQS_INTN_LN based on the sum (or difference) generated by the circuit **126***b*. An output of the circuit **128***b* may present the signal NDQS_OUT_LN to the clock input of the circuit **125***b* and the fourth output of the lower nibble pathway **120***b*.

[**0033**] Referring to FIG. **4**, a timing diagram is shown illustrating various signals implemented in the interface between the physical interface **104** and the DDR SDRAM device **106**. The circuit **104** generally receives aligned DQ and DQS signals from the DDR SDRAM device(s) **106**. As used herein, the term data eye is generally used to refer to a characteristic appearance of the read data signal waveforms, on the DQ lines. The term read training generally refers to a process performed, for example, at powerup or reset, to establish optimum DQS strobe settings. The circuits **124***a*, **124***b*, **128***a* and **128***b* within the datapath (DP) hard-macro are generally configured to shift the DQS strobe to be optimally positioned relative to DQ (valid read data). In one example, the circuits **124***a*, **124***b*, **128***a* and **128***b* may be configured to shift the DQS strobe by one-quarter or one-fifth cycle.

[**0034**] The present invention generally provides robust sampling of the read data over process, voltage, and temperature (PVT) variations. The present invention generally provides a systematic process for calibrating the center of the data valid window over process, voltage and temperature (PVT) corners. A double data rate (DDR) synchronous dynamic random access memory (SDRAM) device generally implements source synchronous data transfer technology where the data signal DQ and the related data strobe signal DQS are sent together by the transmitting device. Due to signal integrity and system implementation factors, a receive data valid window may be reduced to a certain extent (e.g., the shaded portions in the D**0** and D**1** regions of the signal DQ in FIG. **4**). A receiving device implementing the present invention may realize an optimal timing for the read data strobe signal DQS.

[**0035**] The present invention generally provides for adjusting a delay of the read data strobe signal DQS to approximately center the read data strobe signal DQS in the valid data eye window. For example, when the delay is too short, the read data strobe signal DQS is generally earlier than a minimum boundary of the valid data eye window (e.g., trace **140**). When the delay is too great, the read data strobe signal DQS is generally later than a maximum boundary of the valid data eye window (e.g., trace **142**). In general, a correctly set delay places the read data strobe signal DQS within the valid data eye window (e.g., trace **144**).

[**0036**] The present invention may be implemented in logic (e.g., hard intellectual property (IP), firm IP and/or soft IP) that may provide read data synchronization from the DQS domain on an external DDR SDRAM memory bus to a **1**x clock domain (e.g., the signal CLK_**1**X) used by the DDR PHY **104** and the DDR memory controller **102**. The read data strobe signal DQS may be used to clock in the read data. The present invention generally enables a reliable data read operation for high speed applications.

[**0037**] Referring to FIG. **5**, a flow diagram is shown illustrating a process **200** in accordance with a preferred embodiment of the present invention. In one example, the process **200** may begin by setting base delays (e.g., BASE_DELAY_LN and BASE_DELAY_UN) in each of the datapaths **114** to a predetermined initial value and setting offset delays (e.g., OFFSET_P_LN, OFFSET_N_LN, OFFSET_P_UN and OFFSET_N_UN) for each of the datapaths **114** to zero (e.g., block **202**). A write/read/compare test may be performed to verify that the memory device **106** may be read using the initial base delay and offset delay values.

[**0038**] In one example, the process of setting the initial base and offset delays may comprise the following steps:

[**0039**] 1. Verifying that the MDELAY (Master Delay) circuit **116** has achieved DLL lock. In one example, verification may be performed by reading a first bit (e.g., L or lock) and a second bit (e.g., LF or lock failure) in a register of the MDELAY circuit **116**. If the verification fails (e.g., the L bit is not one or the LF bit is not zero), the MDELAY circuit **116** may be reset to recover from the failure condition.

[**0040**] 2. Transferring MDELAY DQS delay control values (the base delay values) to the DPs **114**. In one example, the base delay values may be transferred by writing to one or more registers.

[**0041**] 3. Setting a number of bits (e.g., base delay select bits) so the updated delay values may be loaded into the base delays of the DPs **114**.

[**0042**] 4. Setting the offset delay values in the DPs **114** to zero. In one example, the offset delay values in the DPs **114** may be set to zero by using a control register. In one example, a number of offset delays (e.g., four) may be implemented for each DP **114**. The delay values may be initially set to zero after the reset.

[**0043**] 5. Establishing pointers and storage locations for the minimum and maximum offset delay values to be determined by the process **200** and initializing the offset delay values appropriately (e.g., using signed 2's-complement format). For example, an offset delay value may be implemented for each nibble of each DP byte, and for each nibble a positive-edge strobe offset and a negative-edge strobe offset may be implemented. For example, four offset delay values per DP **114** may be implemented (e.g., OFFSET_N_LN, OFFSET_P_LN, OFFSET_N_UN and OFFSET_P_UN).

[**0044**] 6. Verifying that valid DDR data may be read with the delay offset values set to zero. For example, a routine may be executed that writes to, reads from, and compares a selected data pattern to a selected range of the DDR memory **106**.

If valid data cannot be read with the delay offset values set to zero, the initial settings may not be sufficient. In one example, delay settings for the signal GATEON may be re-evaluated. However, high level system debugging may also be performed. In one example, a signal (e.g., an error signal) may be generated to inform the user.

[**0045**] The process **200** generally continues by determining maximum offset delay values for each DP **114** (e.g., block **204**). For example, maximum upper and lower nibble offset delay values may be determined for each DP **114** (e.g., using a positive adjustment routine). When maximum offset delay values have been determined for each of the datapaths,

the process **200** generally determines minimum offset delay values for each DP **114** (e.g., the block **206**). For example, minimum upper and lower nibble offset delay values may be determined for each DP **114** (e.g., using a negative adjustment routine).

[**0046**] When both maximum and minimum offset delay values have been determined for each offset delay value of each of the DPs **114**, the process **200** generally determines optimum offset delay values for each of the DPs **114** and loads (or programs) the optimum offset delay values into the DPs **114** (e.g., the block **208**). In one example, the minimum and maximum values for each offset delay may be used to determine an average offset delay value (e.g., (max offset+ min offset)/2) as the optimum offset value. The optimum values may be written, in one example, to a respective register (e.g., a DP Slave Delay register) using a control register (e.g., a DDR PHY Select Slave Delay register). When the optimum offset delay values are loaded into each of the DPs **114**, the process **200** generally ends (e.g., block **210**).

[**0047**] In one embodiment, the present invention may be implemented as computer executable code configured to effectively determine the center of the valid data window, such that the desired DQ-DQS timing relationship can be met. In general, the signal GATEON is made active only during read operations. The signal GATEON is inactive at all other times, if a programmable GATEON is implemented. A read GATEON training process, described in a co-pending application Ser. No. _____ (Attorney Docket No. 1496.00419), filed Jul. 1, 2005, which is hereby incorporated by reference in its entirety, may be executed before the DQ-DQS timing adjustment of the present invention is made (except at power-up or reset, when a default slave delay may be loaded before read GATEON training proceeds).

[**0048**] Referring to FIG. **6**, a more detailed flow diagram of the block **204** in FIG. **5** is shown illustrating a process for determining the maximum offset values. In one example, the process for determining the maximum offset values may comprise the following steps:

[**0049**] 1. Using a PAR (Positive Adjustment Routine), increment each offset delay value.

[**0050**] 2. Programming the DP **114** with the selected new offset values.

[**0051**] 3. Testing the read data at each increment.

[**0052**] 4. Repeating step 1 through step 3, until the read test fails.

[**0053**] 5. Recording the highest delay setting that yields valid data.

The highest delay setting that yields valid data is the maximum offset for the respective delay.

[**0054**] In one example, the process **204** may be implemented with a number of steps **220-236**. The process **204** may begin by programming the datapaths with predetermined offset values (e.g., block **220**). The process **204** may perform a test access on the memory **106** (e.g., blocks **222** and **224**). When the memory test access fails, the process **204** may set the maximum offset delay value for the corresponding datapath **114** to the last value that passed the test (e.g., block **226**). When the memory test access passes, the process **204** generally checks whether all delay values have been tested (e.g., block **228**). When all the delay values have not been tested, the process **204** generally proceeds by incrementing the (e.g., block **230**) and repeating the memory access test. When the last delay value for a particular datapath **114** has been tested, the process **204** generally determines whether all of the datapaths **114** have been tested (e.g., block **232**). When all the datapaths **114** have not been tested, the process **204** moves to a next datapath **114** (e.g., block **234**). When all datapaths **114** are tested, the process **204** generally ends (e.g., block **236**).

[**0055**] Referring to FIG. **7**, a more detailed flow diagram of the block **206** of FIG. **5** is shown illustrating a process for determining the minimum offset values. In one example, the process for determining the minimum offset values may comprise the following steps:

[**0056**] 1. Using a NAR (Negative Adjustment Routine), decrement each offset delay value.

[**0057**] 2. Programming the DP **114** with the selected new offset values.

[**0058**] 3. Testing the read data at each decrement.

[**0059**] 4. Repeating step 1 through step 3, until the read test fails.

[**0060**] 5. Recording the lowest (e.g., most-negative in signed-2's complement format) delay value that yields valid data.

The lowest delay value that yields valid data is the minimum offset for the respective delay.

[**0061**] In one example, the process **206** may be implemented with a number of steps **240-256**. The process **206** may begin by programming the datapaths **114** with predetermined offset values (e.g., block **240**). The process **206** may perform a test access on the memory **106** (e.g., blocks **242** and **244**). When the memory test access fails, the process **206** may set the minimum offset delay value for the corresponding datapath **114** to the last value that passed the test (e.g., block **246**). When the memory test access passes, the process **206** generally checks whether all delay values have been tested (e.g., block **248**). When all the delay values have not been tested, the process **206** generally proceeds by decrementing the delay value (e.g., block **250**) and repeating the memory access test. When the last delay value for a particular datapath **114** has been tested, the process **206** generally determines whether all of the datapaths **114** have been tested (e.g., block **252**). When all the datapaths **114** have not been tested, the process **206** moves to a next datapath **114** (e.g., block **254**). When all datapaths **114** are tested, the process **206** generally ends (e.g., block **256**).

[**0062**] The functions performed by the flow diagrams of FIG. **5-7** may be implemented using a conventional general purpose digital computer programmed according to the teachings of the present specification, as will be apparent to those skilled in the relevant art(s). Appropriate software coding can readily be prepared by skilled programmers based on the teachings of the present disclosure, as will also be apparent to those skilled in the relevant art(s).

[**0063**] The present invention may also be implemented by the preparation of application specific integrated circuits

(ASICs), application specific standard products (ASSPs), field programmable gate arrays (FPGAs), or by interconnecting an appropriate network of conventional component circuits, as is described herein, modifications of which will be readily apparent to those skilled in the art(s).

[0064] The present invention thus may also include a computer product which may be a storage medium including instructions which can be used to program a computer to perform a process in accordance with the present invention. The storage medium can include, but is not limited to, any type of disk including floppy disk, optical disk, CD-ROM, magneto-optical disks, ROMS, RAMs, EPROMS, EEPROMS, Flash memory, magnetic or optical cards, or any type of media suitable for storing electronic instructions.

[0065] While the invention has been particularly shown and described with reference to the preferred embodiments thereof, it will be understood by those skilled in the art that various changes in form and details may be made without departing from the spirit and scope of the invention.

1. A method for calibrating a data valid window comprising the steps of:

setting a base delay of one or more datapaths to a predetermined value;

determining an optimum offset delay value for each of said one or more datapaths based upon actual memory accesses; and

delaying a read data strobe signal based upon said base delay and said optimum offset delay value for each of said one or more datapaths.

2. The method according to claim 1, wherein the step of determining said optimum offset delay value comprises the steps of:

determining a maximum offset delay value for each of said one or more datapaths based upon actual memory accesses; and

determining a minimum offset delay value for each of said one or more datapaths based upon actual memory accesses.

3. The method according to claim 2, further comprising the steps of:

determining a maximum offset delay value for each nibble of said one or more datapaths based upon actual memory accesses; and

determining a minimum offset delay value for each nibble of said one or more datapaths based upon actual memory accesses.

4. The method according to claim 3, wherein the step of determining said optimum offset value for each of said one or more datapaths comprises the step of:

averaging a maximum offset delay value and a minimum offset delay value of each nibble of each of said one or more datapaths.

5. The method according to claim 2, wherein the step of determining said maximum offset value comprises the steps of:

setting an offset delay value of each of said datapaths to a predetermined value;

testing a memory access using said offset delay value;

incrementing said offset delay value by a predetermined amount; and

repeating the steps of testing and incrementing until said memory access test fails.

6. The method according to claim 2, wherein the step of determining said minimum offset value comprises the steps of:

setting an offset delay value of each of said datapaths to a predetermined value;

testing a memory access using said offset delay value;

decrementing said offset delay value by a predetermined amount; and

repeating the steps of testing and decrementing until the memory access test fails.

7. The method according to claim 1, wherein the step of determining said optimum offset value comprises the step of:

averaging a maximum offset delay value and a minimum offset delay value of each of said datapaths.

8. The method according to claim 1, wherein said actual memory accesses comprise the steps of:

writing data to a memory device;

reading data from said memory device;

comparing the data read from said memory device to the data written to said memory device; and

determining a pass/fail status based on a result of the comparing step.

9. The method according to claim 8, wherein said data comprises a predetermined pattern.

10. A computer readable medium having instructions for causing a computer to execute the method according to claim 1.

11. An apparatus comprising:

a first circuit configured to set a base delay of one or more datapaths to a predetermined value;

a second circuit configured to determine an optimum offset delay value for each of said one or more datapaths based upon actual memory accesses; and

a third circuit configured to delay a data strobe signal based on said base delay and said optimum offset delay for each of said one or more datapaths.

12. The apparatus according to claim 11, wherein said second circuit is further configured to:

determine a maximum offset delay value for each of said one or more datapaths based upon actual memory accesses; and

determine a minimum offset delay value for each of said one or more datapaths based upon actual memory accesses.

13. The apparatus according to claim 12, wherein said second circuit is further configured to:

determine a maximum offset delay value for each nibble of said one or more datapaths based upon actual memory accesses; and

determine a minimum offset delay value for each nibble of said one or more datapaths based upon actual memory accesses.

14. The apparatus according to claim 13, wherein said second circuit is further configured to:

average a maximum offset delay value and a minimum offset delay value of each nibble of each of said one or more datapaths.

15. The apparatus according to claim 12, wherein said second circuit is further configured to:

set an offset delay value of each of said datapaths to a predetermined value;

test a memory access using said offset delay value;

increment said offset delay value by a predetermined amount; and

repeatedly test and increment said offset delay value until said memory access fails.

16. The apparatus according to claim 12, wherein said second circuit is further configured to:

set an offset delay value of each of said datapaths to a predetermined value;

test a memory access using said offset delay value;

decrement said offset delay value by a predetermined amount; and

repeatedly test and decrement said offset delay value until said memory access fails.

17. The apparatus according to claim 11, wherein said second circuit is further configured to:

average a maximum offset delay value and a minimum offset delay value for each of said datapaths.

18. The apparatus according to claim 11, wherein said second circuit is further configured to:

write data to a memory device;

read data from said memory device;

compare the data read from said memory device to the data written to said memory device; and

determine a pass/fail status based on a result of the comparison.

19. The apparatus according to claim 11, wherein said first, said second and said third circuits are instantiated on a structured application specific integrated circuit (ASIC).

20. A memory interface circuit comprising:

means for setting a base delay of one or more datapaths to a predetermined value;

means for determining an optimum offset delay value for each of said one or more datapaths using actual memory accesses; and

means for delaying a read data strobe signal based on said base delay and said optimum offset delay for each of said one or more datapaths.

* * * * *