US 20090154567A1

(19) United States

(12) Patent Application Publication

(10) Pub. No.: US 2009/0154567 A1

(43) Pub. Date: Jun. 18, 2009

Lei et al.

(54) **IN-LOOP FIDELITY ENHANCEMENT FOR VIDEO COMPRESSION**

(76) Inventors: **Shaw-Min Lei**, Taipei County (TW); **Yu-Wen Huang**, Taipei City (TW); **Xun Guo**, Beijing City (CN)

Correspondence Address:
NORTH AMERICA INTELLECTUAL PROPERTY CORPORATION
P.O. BOX 506
MERRIFIELD, VA 22116 (US)

(21) Appl. No.: **12/203,933**

(22) Filed: **Sep. 4, 2008**

Related U.S. Application Data

(60) Provisional application No. 61/013,305, filed on Dec. 13, 2007, provisional application No. 61/054,820, filed on May 21, 2008.

Publication Classification

(51) **Int. Cl.**
H04N 7/26 (2006.01)

(52) **U.S. Cl.** **375/240.24**; 375/E07.026

(57) **ABSTRACT**

An encoder for receiving a video frame and performing encoding processes to generate an encoded bitstream includes: a fidelity enhancement block, for performing a fidelity enhancement technique on the video frame utilizing a quad-tree partition, and generating fidelity enhancement information including a parameter associated with the quad-tree partition structure; and an entropy coding block, coupled to the fidelity enhancement block, for encoding the fidelity enhancement information, and embedding the encoded fidelity enhancement information into the encoded bitstream.

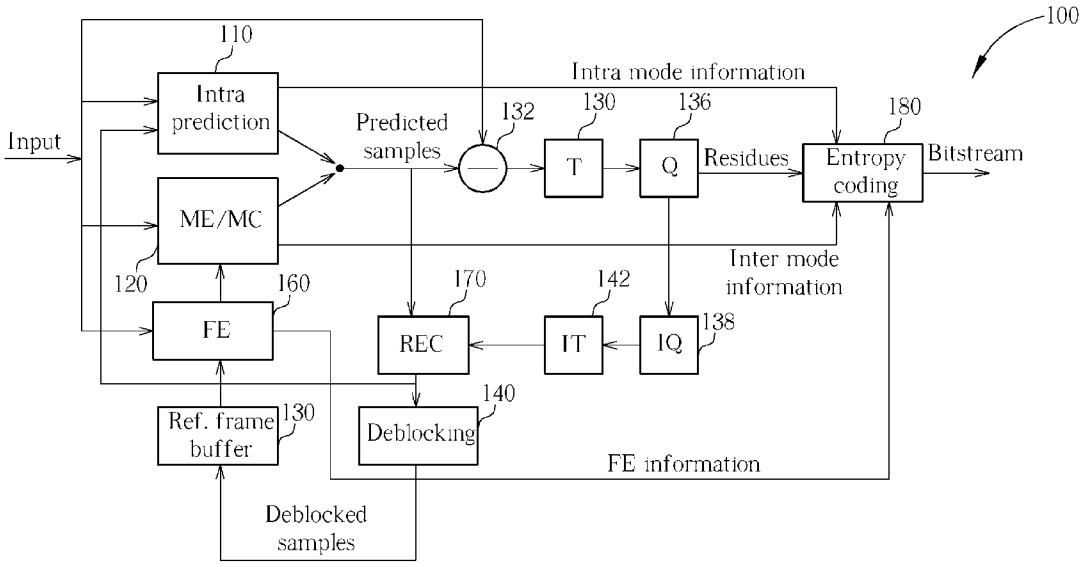

SAMSUNG-1011

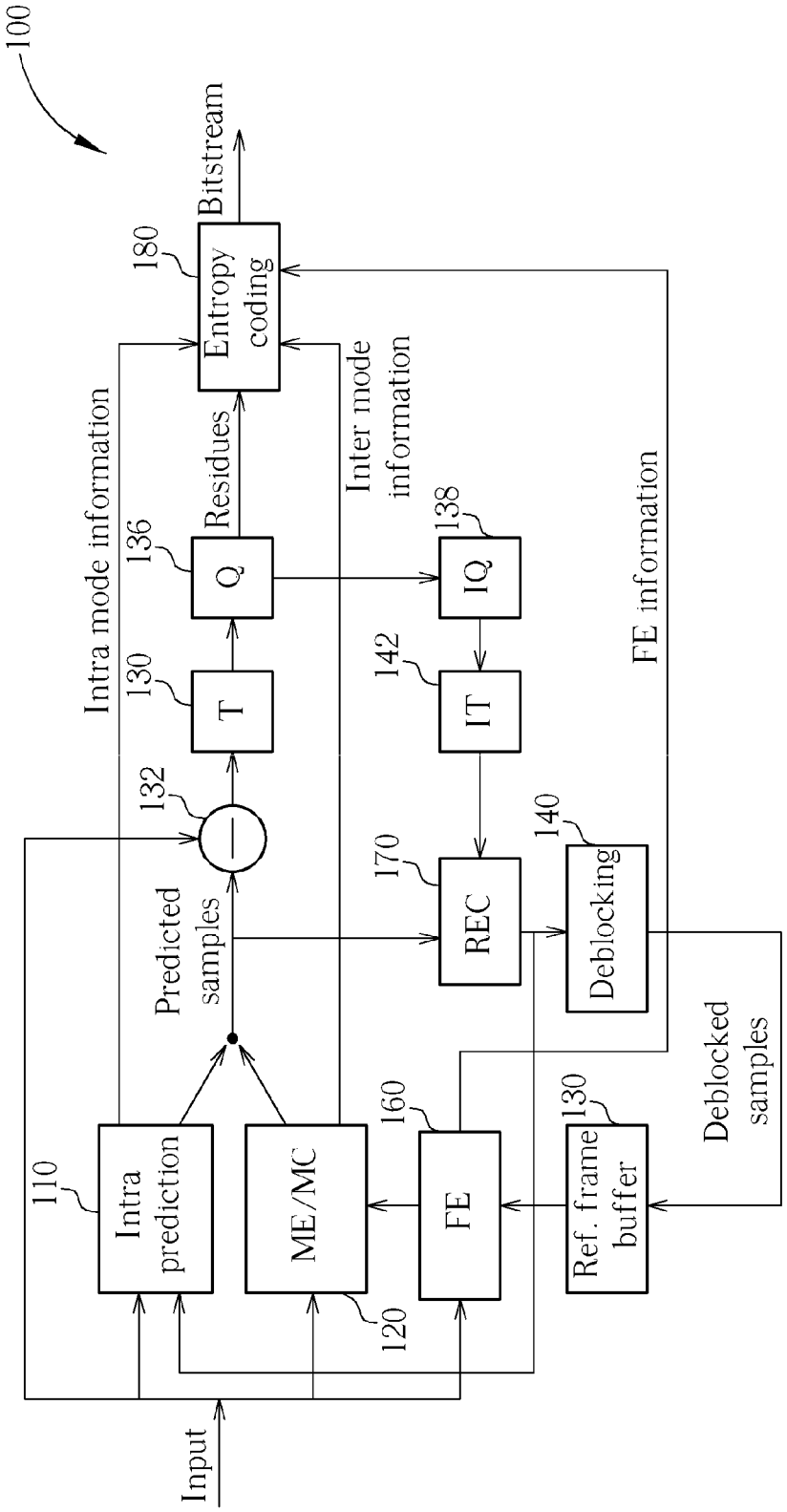
100
Bitstream
180
Entropy coding
Intra mode information
Residues
Inter mode information
136
Q
138
IQ
FE information
130
T
142
IT
132
140
170
REC
Deblocking
Predicted samples
Deblocked samples
160
130
110
Intra prediction
ME/MC
FE
Ref. frame buffer
120
Input

FIG. 1

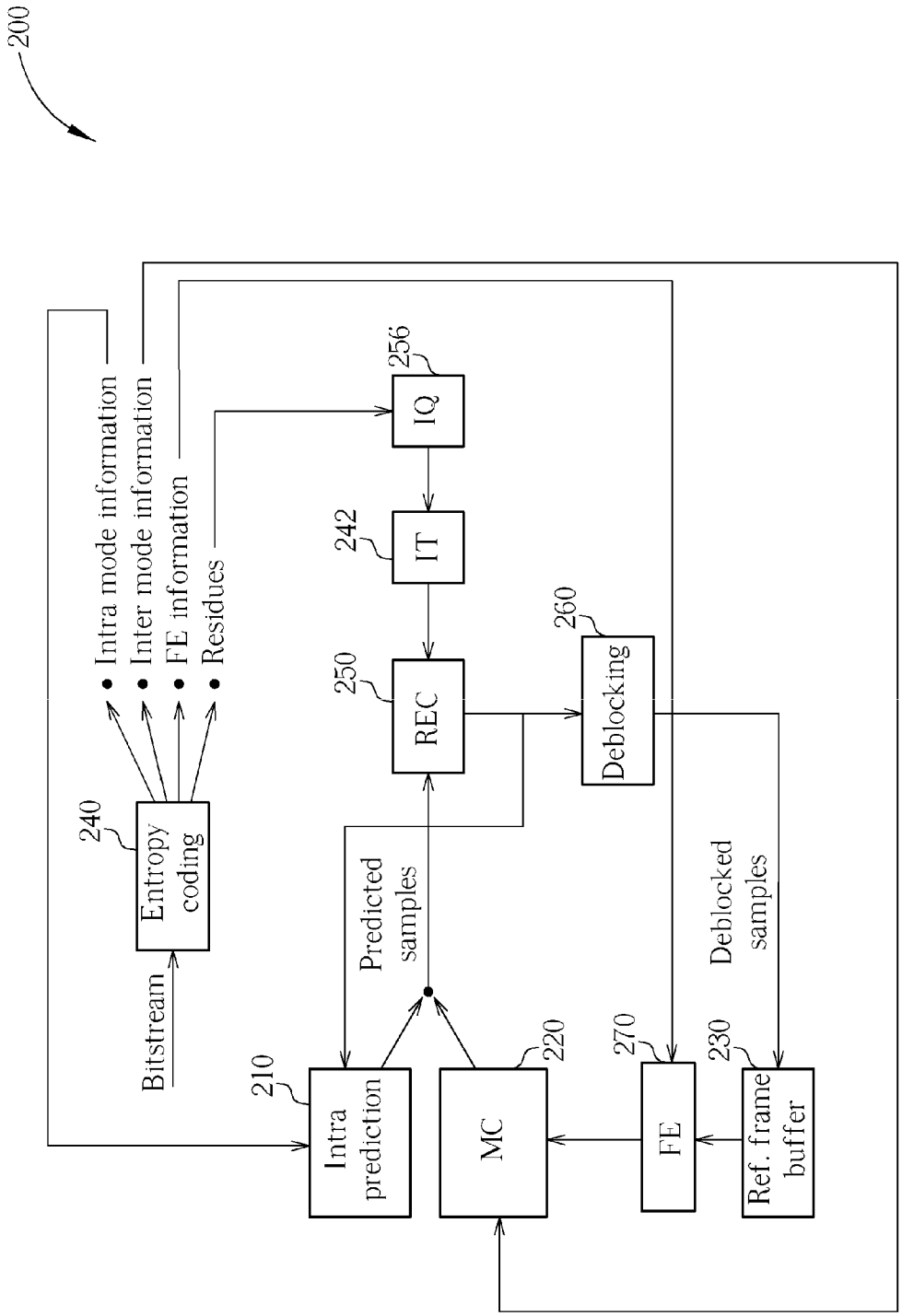
200
Intra mode information
Inter mode information
FE information
Residues
240
Entropy coding
Bitstream
210
Intra prediction
Predicted samples
220
MC
250
REC
242
IT
256
IQ
260
Deblocking
Deblocked samples
270
FE
230
Ref. frame buffer

FIG. 2

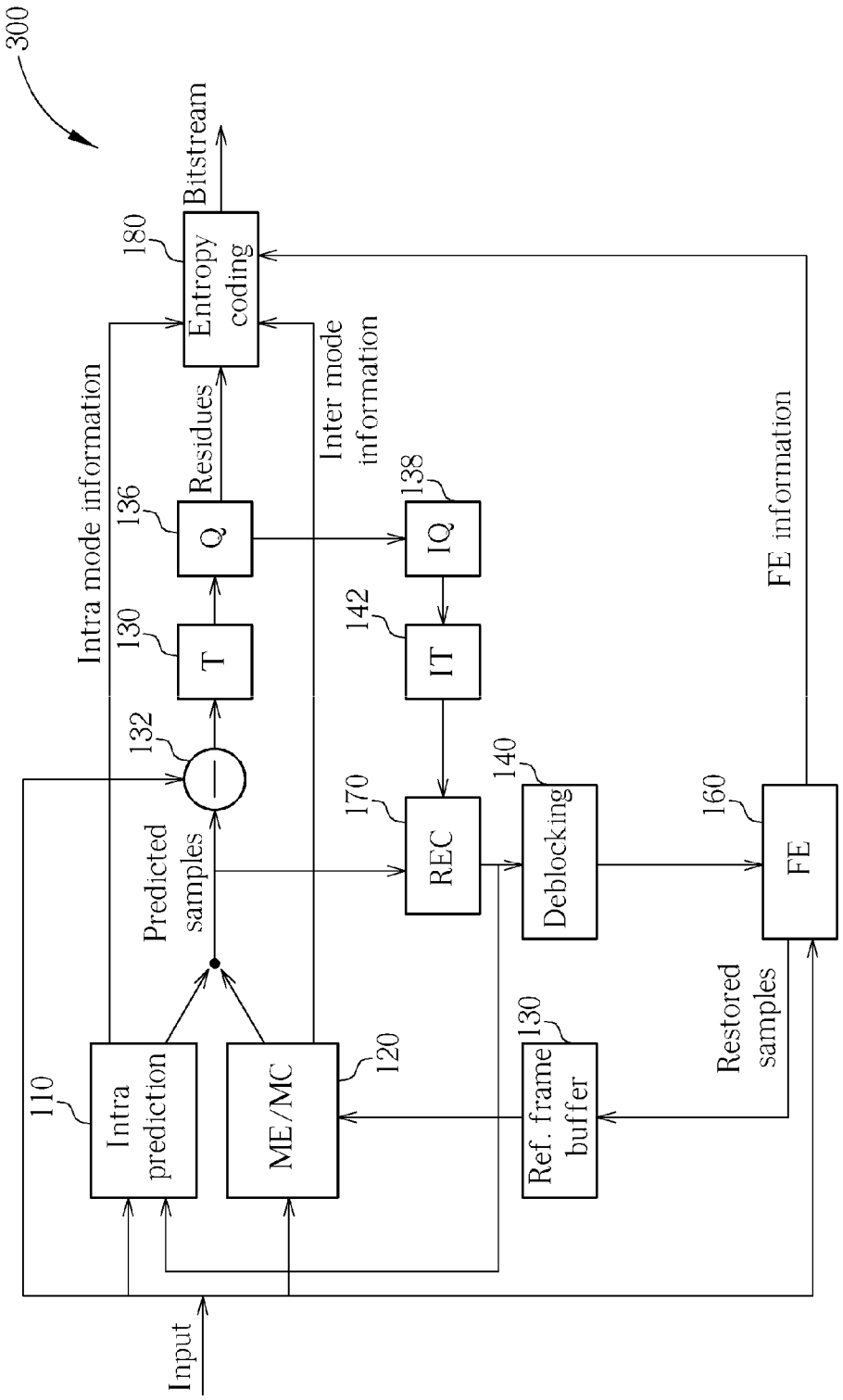
300
Bitstream
180
Entropy coding
Intra mode information
Inter mode information
FE information
136
Q
Residues
138
IQ
130
T
142
IT
132
140
170
REC
Deblocking
160
FE
Predicted samples
Restored samples
110
Intra prediction
ME/MC
120
130
Ref. frame buffer
Input

FIG. 3

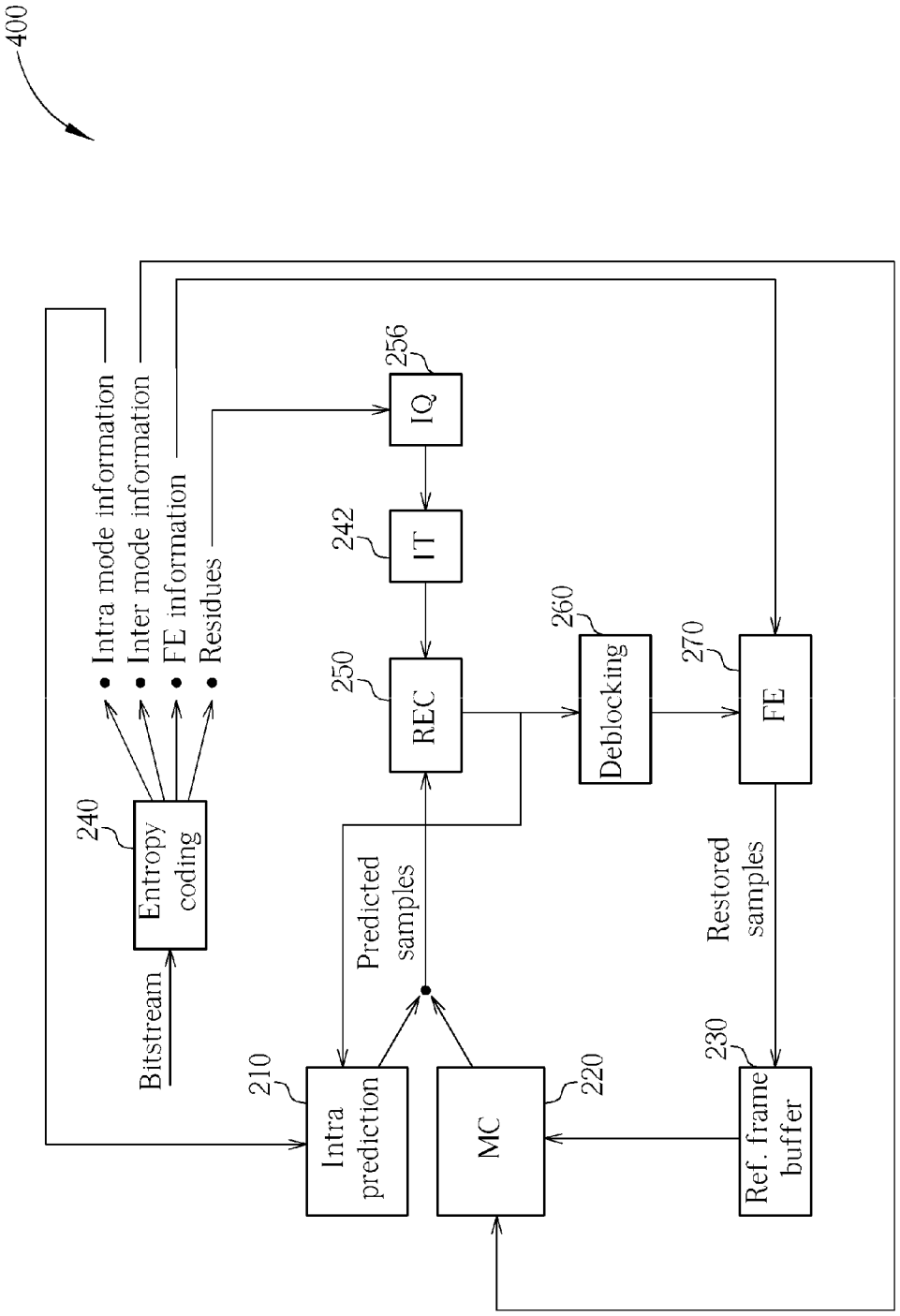
400
Intra mode information
Inter mode information
FE information
Residues
240
Entropy coding
Bitstream
210
Intra prediction
Predicted samples
MC
220
250
REC
242
IT
256
IQ
260
Deblocking
270
FE
Restored samples
230
Ref. frame buffer

FIG. 4

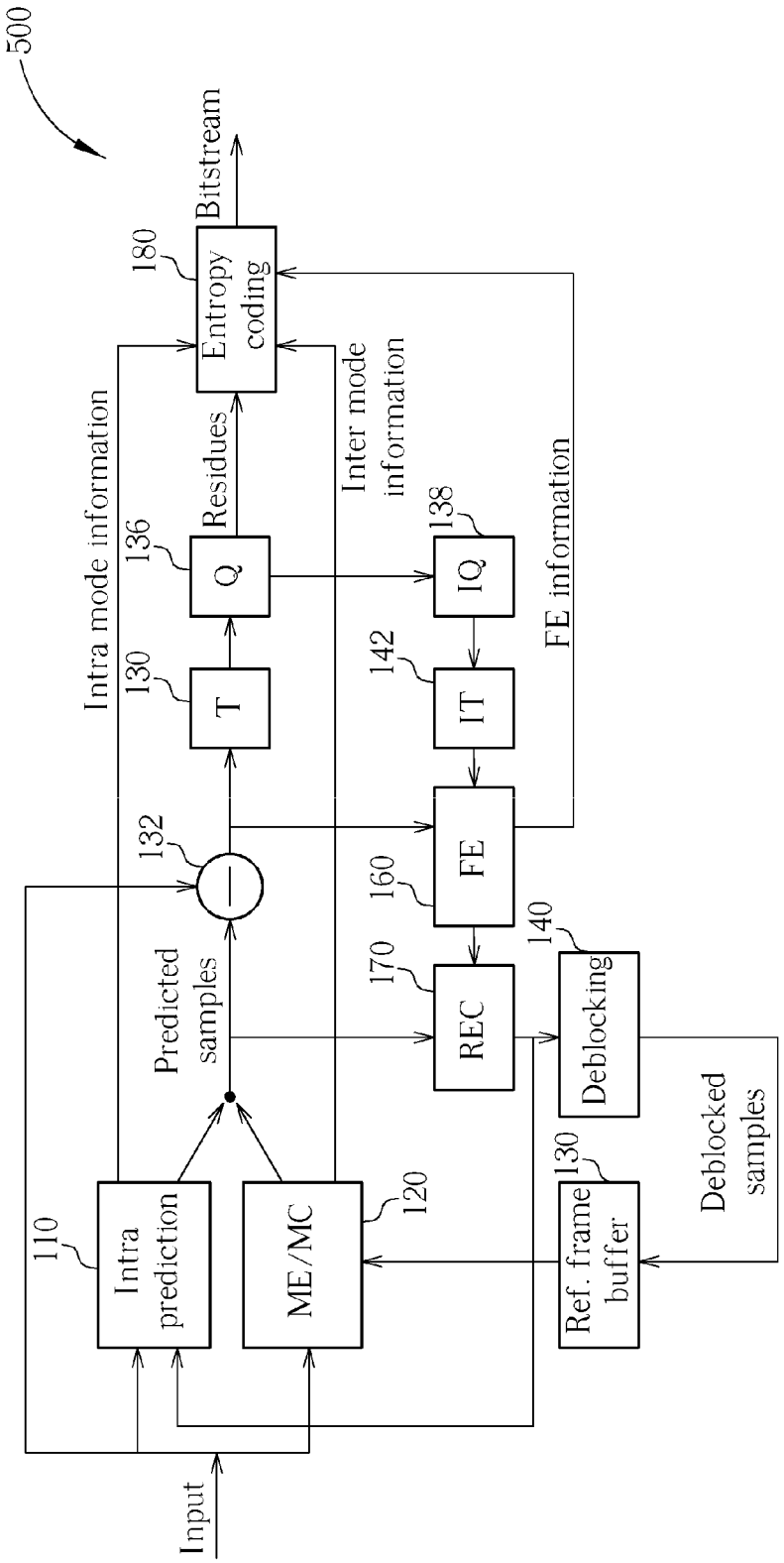
500
Input
110
Intra prediction
ME/MC
120
Predicted samples
Intra mode information
130
T
132
136
Q
Residues
180
Entropy coding
Bitstream
Inter mode information
138
IQ
142
IT
160
FE
FE information
170
REC
140
Deblocking
Deblocked samples
130
Ref. frame buffer

FIG. 5

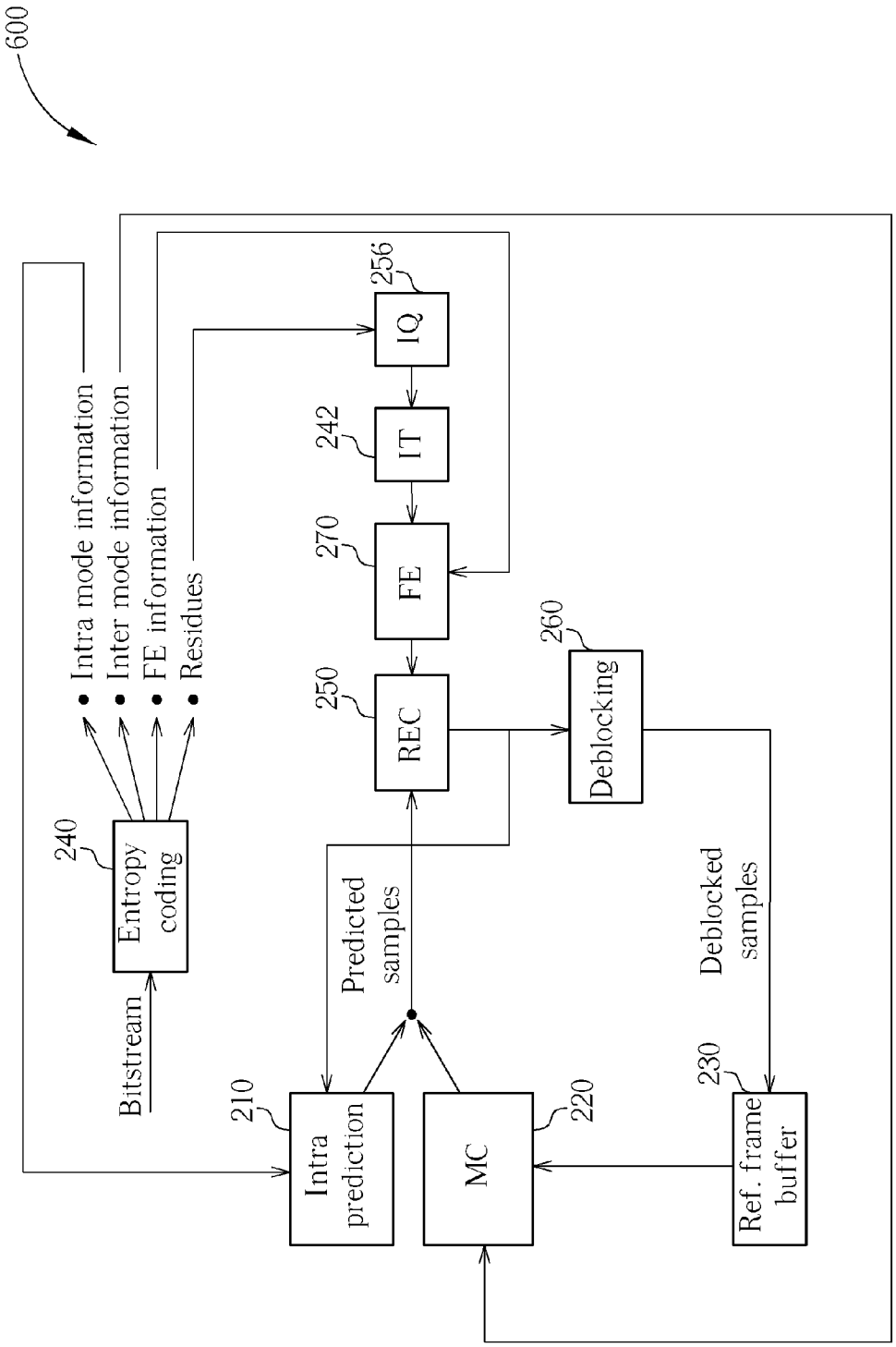
600
Intra mode information
Inter mode information
FE information
Residues
240
Entropy coding
Bitstream
210
Intra prediction
Predicted samples
MC
220
250
REC
270
FE
242
IT
256
IQ
260
Deblocking
Deblocked samples
230
Ref. frame buffer

FIG. 6

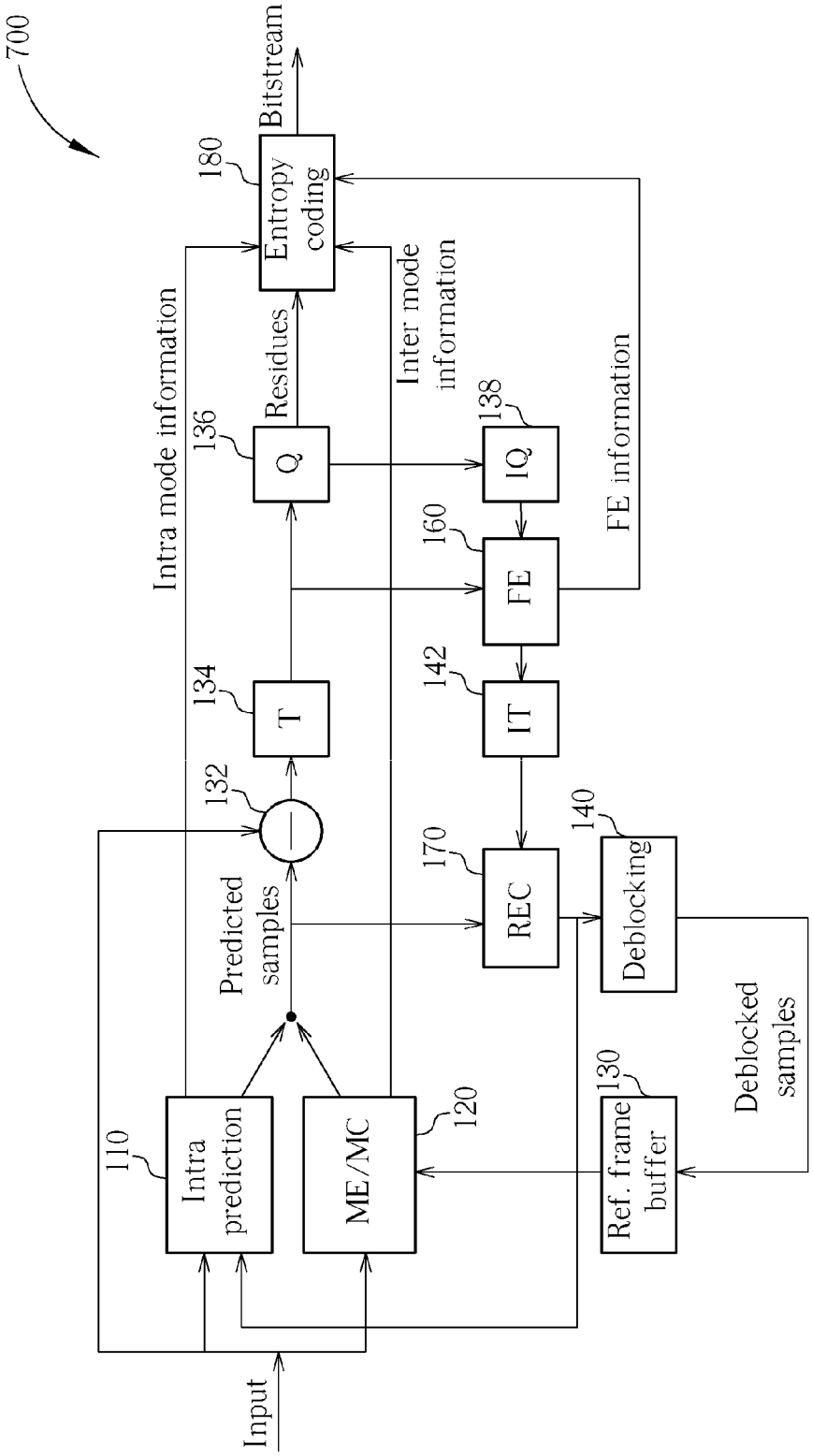
700
Input
110
Intra prediction
ME/MC
120
Predicted samples
132
134
T
136
Q
Residues
180
Entropy coding
Bitstream
Intra mode information
Inter mode information
138
IQ
160
FE
FE information
142
IT
170
REC
140
Deblocking
130
Ref. frame buffer
Deblocked samples

FIG. 7

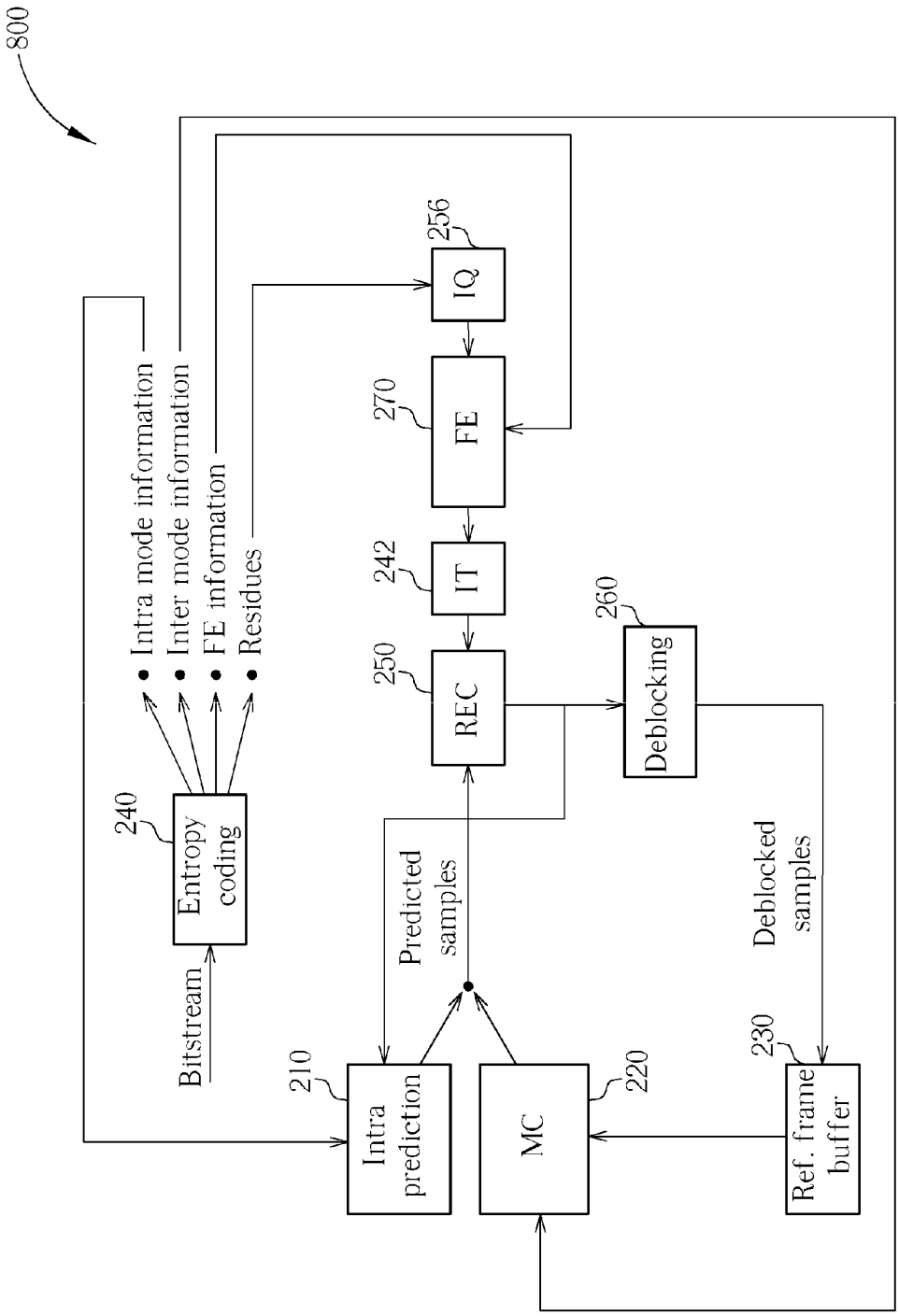
800
Intra mode information
Inter mode information
FE information
Residues
240
Entropy coding
Bitstream
210
Intra prediction
Predicted samples
MC
220
250
REC
242
IT
270
FE
256
IQ
260
Deblocking
Deblocked samples
230
Ref. frame buffer

FIG. 8

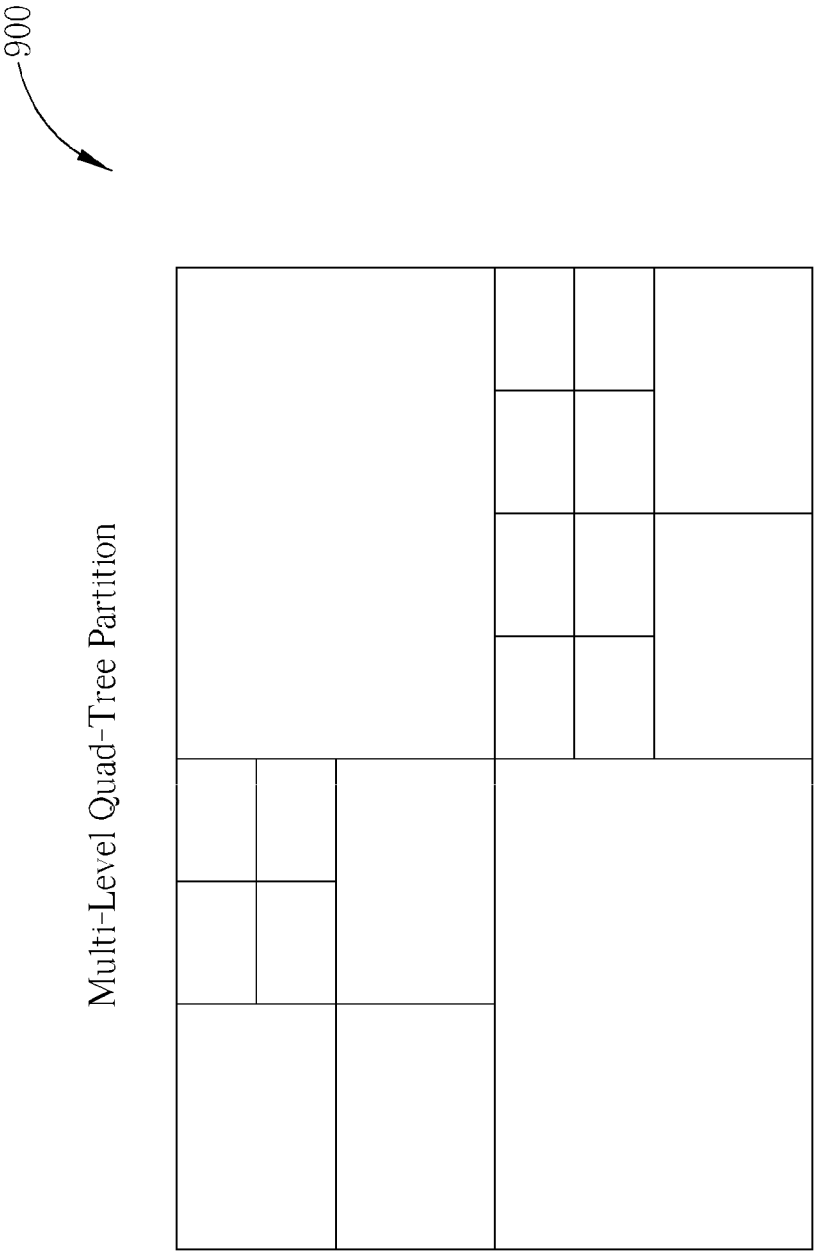

FIG. 9

IN-LOOP FIDELITY ENHANCEMENT FOR VIDEO COMPRESSION

CROSS REFERENCE TO RELATED APPLICATIONS

[0001] The present invention cites the article "*Transmission of post-filter hints for video coding schemes*", by Stephen Wittmann and Thomas Wedi, in Proceedings of 2007 IEEE International Conference on Image Processing (ICIP2007), and European Patent No. EP 1 841 230 A1, which are included herein as reference.

BACKGROUND

[0002] Next generation video coding methods aim to achieve maximum efficiency by compressing data as much as possible. If data can be significantly compressed then high quality video can be streamed and delivered over bandwidth limited networks. The H.264/AVC coding standard is one example of a video coding standard. The H.264 standard combines block motion compensation with transform coding. Transform coding removes spatial redundancy within a frame, whereas block motion compensation removes redundancy between frames.

[0003] Video coding is performed in four parts: prediction, transformation, quantization and entropy coding. At the encoding side, prediction can consist of intra prediction, which refers to pixels in the same frame, and inter prediction, which refers to pixels in a preceding frame. Transformation changes prediction residues into coefficients in order to compact the energy of residues toward low frequency bands. Quantization divides transform coefficients of a frame by a value with rounding to a representation of a smaller number of bit-depth in order to further reduce the number of bits a frame can be represented by. The final stage, entropy coding, involves lossless representation of quantized transform coefficients and other parameters. The decoding side performs the inverse of these operations to generate reconstructed pixels. Both decoding and encoding processes include a closed loop wherein encoded/decoded macroblocks of a frame are reconstructed and then input back to a prediction unit for generating coding information of a next frame. Utilizing the reconstructed frame rather than the original frame for predicting the following frames prevents drift between frames.

[0004] The H.264 standard utilizes both intra prediction and inter prediction, and performs block based coding. Dividing a frame into macroblocks and separately coding each macroblock can give rise to artifacts created at block edges; i.e. there are visible divisions between blocks as the coding modes or motion vectors of neighboring blocks are usually different. To cancel out these artifacts, most block-based coding techniques include a deblocking filter in the closed coding loop. This deblocking filter can alleviate the artifacts at block edges, but cannot remove quantization errors within blocks. When coding is performed utilizing large quantization values at high fidelity, the deblocking filter alone is not sufficient.

[0005] A Wiener filter works by removing noise components from a coded signal in order to bring the noisy coded signal closer to the original signal. When a signal s is input to a typical system, it will be disturbed to some degree resulting in a signal s' that differs from the original signal s. This is the result of additive noise. The purpose of the Wiener filter is to minimize the mean square error between these two signals so that the resultant filtered signal $\hat{s}$ is closer to the original signal s than to the disturbed signal s'. The Wiener filter operates by generating cross correlation matrices utilizing filter coefficients and auto-correlation matrices.

[0006] European Patent No. EP 1 841 230 A1 teaches a Wiener filter implemented both at the encoder and at the decoder side. The Wiener filter is therefore able to first generate the cross-correlation matrix, encoder parameters associated with the matrix, and embed these parameters in the bitstream and send them to the decoder for decoding, where they can be utilized to reduce quantization errors in a decoded frame, ensuring higher fidelity.

SUMMARY

[0007] The present invention aims to improve on the system provided in the above-mentioned European Patent Application, by introducing a plurality of fidelity enhancement methods and apparatus, implemented both at the encoder and at the decoder side.

[0008] An encoder for receiving a video frame and performing encoding processes to generate an encoded bitstream comprises: a fidelity enhancement block, for performing a first fidelity enhancement technique on the processed data optionally utilizing a quad-tree partition, and generating fidelity enhancement information including at least one parameter associated with the first fidelity enhancement technique; and an entropy coding block, coupled to the fidelity enhancement block, for encoding the fidelity enhancement information, and embedding the encoded fidelity enhancement information into the encoded bitstream.

[0009] A first method for coding a video frame comprises: receiving a video frame; utilizing a quad-tree partition method to determine how to partition the current frame; partitioning the current frame according to a determination result, and then performing Wiener filtering on the current frame to generate Wiener filtering parameters; and encoding the video frame with the Wiener filtering parameters to generate an encoded bitstream.

[0010] A second method for coding a video frame comprises: receiving a video frame; performing fidelity enhancement on the processed data to generate fidelity enhancement information; encoding the received bitstream to generate an encoded bitstream; encoding the fidelity enhancement information, and embedding the encoded fidelity enhancement information into a tail of the encoded bitstream; and generating a pointer indicating the location of the fidelity enhancement information in the bitstream, and placing the pointer in the header of the encoded bitstream.

[0011] These and other objectives of the present invention will no doubt become obvious to those of ordinary skill in the art after reading the following detailed description of the preferred embodiment that is illustrated in the various figures and drawings.

BRIEF DESCRIPTION OF THE DRAWINGS

[0012] FIG. **1** is a diagram of an encoder according to a first embodiment of the present invention.

[0013] FIG. **2** is a diagram of a decoder according to the first embodiment of the present invention.

[0014] FIG. **3** is a diagram of an encoder according to a second embodiment of the present invention.

[0015] FIG. **4** is a diagram of a decoder according to the second embodiment of the present invention.

[0016] FIG. **5** is a diagram of an encoder according to a third embodiment of the present invention.

[0017] FIG. **6** is a diagram of a decoder according to the third embodiment of the present invention.

[0018] FIG. **7** is a diagram of an encoder according to a fourth embodiment of the present invention.

[0019] FIG. **8** is a diagram of a decoder according to the fourth embodiment of the present invention.

[0020] FIG. **9** is a diagram illustrating multi-level quad-tree partition.

DETAILED DESCRIPTION

[0021] The present invention aims to expand on the Wiener filtering in the encoder, by providing a plurality of fidelity enhancement methods, wherein information relating to these fidelity enhancement methods will be encoded and embedded in the bitstream. In this way, when the decoder decodes the received bitstream, the embedded fidelity enhancement information is retrieved and utilized at the decoder side to perform fidelity enhancement on the processed data. This not only enables reduction of quantization errors, but also ensures increased overall quality of the restored video frame, as many different techniques can be carried out on the processed data and many different placements of the fidelity enhancement block at both the encoder and decoder side ensures parity of enhancement.

[0022] The purpose of applying fidelity enhancement methods to the video encoders and decoders is to enhance fidelity by canceling errors; examples of the fidelity enhancement method include, but are not limited to, Kalman filtering, noise reduction, deblurring, Wiener filtering, regression, regularization, and various discrepancy modeling such as DC offset (zero order), weighted prediction (first order, e.g. ax+b), spatial prediction, for example, higher order prediction (e.g. av^2+bv+c), line fitting (ax+b, ay+b), curve fitting (av^2+bv+c, ay^2+by+c), plane fitting (ax+by+c), and surface fitting ($ax^2+bxy+cy^2+dx+ey+f$).

[0023] It should be noted that these fidelity enhancement techniques can be performed on the processed data at a number of stages in the encoder. The following disclosure provides four exemplary embodiments, but the scope of the present invention should not be limited to these four embodiments. Furthermore, modifications wherein more than one fidelity enhancement block is located in the encoder (and at corresponding locations in the decoder) also fall within the scope of the present invention.

[0024] As well as providing a plurality of fidelity enhancement methods to be utilized in the encoder, the present invention further provides a plurality of ways of performing said fidelity enhancement techniques, as well as a new bitstream syntax.

[0025] It is common to perform Wiener filtering at a slice and block level. The present invention, however, performs fidelity enhancement utilizing a quad-tree partition method on the processed data. By dividing a video frame utilizing quad-tree partition, fidelity enhancement can be performed in such a way as to minimize the cost function. In some frames, for example, a minimum of quantization errors are present in one half of the frame, and therefore less extensive calculations are required. In the other half of the frame, conversely, a large number of quantization errors are present, and therefore more extensive calculations are required to minimize the quantization errors. In such a case, it makes sense to divide the half of the frame with more quantization errors into smaller areas than the other half of the frame. Quad-tree partition therefore provides an adaptive fidelity enhancement method by utilizing cost function analysis to determine the best way to partition the frame.

[0026] FIG. **9** shows an example of a video frame **900** with quad-tree partition. Processed data of the video frame **900** are provided to a fidelity enhancement block, for example, a Wiener filter, and the fidelity enhancement block first determines a quad-tree partition structure based on cost function comparison. The fidelity enhancement block may employ a top-down splitting algorithm, bottom-up merging algorithm, or any kind of order, to sequentially calculate a cost function corresponding to each candidate quad-tree partition structure, in order to determine the quad-tree partition structure with a minimum cost. An example of the cost function is the rate distortion function ($j=D+\lambda r$). For the top-down splitting algorithm, the video frame **900** is first divided into four first-level parts, a cost function corresponding to an un-divided frame and a cost function corresponding to the four first-level parts (the divided frame) are compared, and the partition obeys the one with the smaller cost function. If the latter cost function is smaller, each of the first-level parts is further divided into four second-level parts, and cost functions corresponding to the un-divided and divided first-level part are compared to determine whether this first-level part needs to be split. The video frame **900** in FIG. **9** shows two first-level parts, at the bottom left and top right of the frame, which are not further divided into second-level parts, however, the other two first-level parts are further divided. Similarly, each of the second-level part is divided into third-level parts and cost functions are compared, and this top-down splitting algorithm terminates when a predetermined partition level is approached.

[0027] For the bottom-up merging algorithm, the fidelity enhancement block starts calculating cost functions of smallest parts, for example, for third-level parts, a cost function corresponding to four third-level parts is compared with a cost function corresponding to a larger area composed of these four third-level parts. The four third-level parts are merged into a second-level part if the latter cost function is lower. Four second-level parts can also merged into a first-level part after cost function comparison. The quad-tree partition structure finally determined by the fidelity enhancement block can be one of the fidelity enhancement information that will be embedded in the bitstream at the entropy coding stage.

[0028] When performing fidelity enhancement with quad-tree partition, each calculation result for a smaller region can be fully reused by a larger region containing the smaller one. Such a reuse method can be applied to both the bottom-up merging and top-down splitting algorithms. Calculation results corresponding to smaller regions can be computed first, and these calculation results can then be reused for calculation of the larger region. In an embodiment of utilizing Wiener filter for fidelity enhancement, filter parameters including cross-correlation and auto-correlation matrices are generated. When certain partition methods, such as quad-tree partition methods, are performed, certain areas of a filtered frame will be re-filtered, depending on the size of the area. The present invention, therefore, provides a reuse method for this Wiener filtering wherein cross-correlation and auto-correlation matrices for a smaller area are reused for a larger area, when filtering is performed on the larger area composed of the smaller area. This saves on calculation time.

[0029] Fidelity enhancement parameters are usually encoded and embedded in the tail of the encoded bitstream. As providing fidelity enhancement parameters in the tail of the bitstream means that the decoder cannot start performing fidelity enhancement until the tail of the bitstream is decoded, some conventional methods place fidelity enhancement information in the header. This method, however, requires recatenation of the bitstream. The present invention, therefore, still embeds fidelity enhancement information in the tail of the bitstream, but places a pointer in the header to indicate the location of the fidelity enhancement information in the bitstream. For example, the pointer can give information concerning the number of bits between the header and the tail. This allows the decoder to search for the fidelity enhancement information as soon as the pointer (in the header) is decoded, and the decoder can therefore start performing fidelity enhancement much faster than if the decoder had to decode the whole bitstream before obtaining the fidelity enhancement parameters. Please note that the fidelity enhancement parameters do not necessarily have to be embedded in the tail of the bitstream and the pointer can refer to any information that is stored at any point in the bitstream, as the pointer is modified by the encoder, and is therefore an adaptive pointer.

[0030] At least one or all of these methods can be utilized by the fidelity enhancement block detailed above. The following diagrams will illustrate various locations of the fidelity enhancement block, and further explain the operation of the fidelity enhancement block.

[0031] Please refer to FIG. **1**. FIG. **1** is a diagram of an encoder **100** comprising a fidelity enhancement (FE) block **160**. The encoder **100** comprises an intra prediction block **110**, an inter (ME/MC) prediction block **120**, a subtractor **132**, a transform block **134**, a quantization block **136**, an inverse transform block **142**, an inverse quantization block **138**, a reconstruction unit **170**, a deblocking unit **140**, a reference frame buffer **130** and an entropy coding unit **180**. Apart from the fidelity enhancement block **160**, the other components of the encoder **100** are well-known to those skilled in the art, and therefore the function and operation of these components will not be detailed here. The fidelity enhancement block **160** receives processed data of one or more reference frames from the reference frame buffer **130**, reduces discrepancy between the processed data of the reference frame and data of a current frame, and provides compensated processed data to the inter (ME/MC) prediction block for prediction. The fidelity enhancement block **160** can perform at least one of the above-listed fidelity enhancement methods, at block, slice or quad-tree level. The fidelity enhancement block **160** can also utilize one or more of the above-listed methods when performing fidelity enhancement and generating FE associated parameters. In other words, the FE block **160** as disclosed in FIG. **1** can reuse auto-correlation and cross-correlation matrices when performing Wiener filtering, and the generated FE information can be embedded into the tail of the encoded bitstream while utilizing the adaptive pointer in the header of the encoded bitstream to notify the decoder of the location of the fidelity enhancement information in the bitstream.

[0032] Please refer to FIG. **2**. FIG. **2** is a diagram of a decoder **200** according to the first embodiment of the present invention. The decoder **200** also includes a fidelity enhancement block **270** in a corresponding location to the FE block **160** in the encoder **100**. This ensures that fidelity enhancement information generated by the encoder **100** can be optimally utilized by the decoder **200**. The decoder **200** further comprises an entropy decoding unit **240**, an intra prediction block **210**, a motion compensation (MC) unit **220**, a reference frame buffer **230**, an inverse quantization block **256**, an inverse transform block **242**, a reconstruction unit **250** and a deblocking unit **260**. As the function and operation of these units is well known to those skilled in the art, related details are not included here for brevity. The entropy decoding unit **240** retrieves residues and information such as fidelity enhancement information from a received bitstream. In some embodiments, the entropy decoding unit **240** obtains a pointer indicating the location of the fidelity enhancement information in the received bitstream while decoding a header. The fidelity enhancement block **270** then receives the fidelity enhancement information from the entropy decoding unit **240** and conducts fidelity enhancement on processed data of one or more reference frames stored in the reference frame buffer. In some embodiments, the fidelity enhancement information comprises information representing a specific quad-tree partition structure, and the fidelity enhancement block performs filtering or discrepancy modeling according to the specific quad-tree partition structure.

[0033] Please refer to FIG. **3** and FIG. **4**. FIG. **3** and FIG. **4** are, respectively, diagrams of an encoder **300** and decoder **400** according to a second embodiment of the present invention. The encoder **300** and decoder **400** each include an FE block **160**, **270**. The FE block **160** of the encoder **300** located after the deblocking unit **140** is utilized to reduce errors between processed data of a current frame and original data (i.e. unprocessed data) of the current frame, and generate compensated processed data. The compensated processed data from the FE block **160** is stored in the reference frame buffer **130**. It should be noted that the operation and function of each block shown in FIGS. **3** and **4** are the same as the respective blocks shown in FIGS. **1** and **2**, and therefore all numerals have been kept the same.

[0034] Please refer to FIGS. **5~8**. FIGS. **5~8** are diagrams of, respectively, an encoder **500** according to a third embodiment of the present invention, a decoder **600** according to the third embodiment of the present invention, an encoder **700** according to a fourth embodiment of the present invention, and a decoder **800** according to the fourth embodiment of the present invention. The difference between each embodiment is the location of the FE block. The FE block in each diagram is capable of performing fidelity enhancement techniques including Wiener filtering. In some embodiments, quad-tree partition is employed, and the reuse method can further reduce the calculation time. For example, when Wiener filtering is performed on a smaller area and then performed on a larger area including the smaller area, already generated cross and auto-correlation matrices can be re-used for the filtering. Furthermore, each disclosed encoder is capable of utilizing an adaptive pointer in the header of the encoded bitstream for indicating the location of the fidelity enhancement information in the bitstream. In the third embodiment, as shown in FIG. **5**, the FE block **160** performs fidelity enhancement on processed data of a current frame to reduce errors introduced by the transform block **134**, quantization block **136**, inverse quantization block **138**, and inverse transform block **142** processes. In the fourth embodiments as shown in FIG. **7**, the FE block **160** performs fidelity enhancement on processed data of a current frame to reduce errors introduced by the quantization block **136** and inverse quantization block **138** processes.

[0035] It should be obvious to those skilled in the art that the disclosed FE block is not limited to the single location disclosed in the above diagrams, and that an encoder and decoder comprising a plurality of FE blocks in a plurality of locations is also within the scope of the present invention. It is also possible for each FE block in the encoder and decoder to perform different fidelity enhancement methods. It should further be appreciated that it is not necessary for the FE blocks to perform all the above-disclosed methods (pointer in bitstream indicating location of FE information, quad-tree partition, re-use of calculation result in quad-tree partition, etc.) and an FE block that only performs some or one of the above-disclosed fidelity enhancement techniques also falls within the scope of the present invention.

[0036] The present invention expands on the idea of utilizing Wiener filtering at the encoding side and embedding pertinent filtering information into the encoded bitstream by providing a plurality of fidelity enhancement techniques at the encoder side, wherein pertinent information will similarly be embedded in the encoded bitstream. The present invention also provides a method for performing fidelity enhancement such as Wiener filtering on a frame divided according to quad-tree partition, as well as re-use of calculation results. Finally, the present invention provides means for a decoder to instantly access the FE information even when it is not embedded in the header of the bitstream, by providing a pointer in the header of the bitstream for indicating location of the FE information.

[0037] Those skilled in the art will readily observe that numerous modifications and alterations of the device and method may be made while retaining the teachings of the invention. Accordingly, the above disclosure should be construed as limited only by the metes and bounds of the appended claims.

What is claimed is:

1. An encoder for receiving a video frame and performing encoding processes to generate an encoded bitstream, the encoder comprising:

a fidelity enhancement block, for performing a fidelity enhancement technique on processed data utilizing a quad-tree partition, and generating fidelity enhancement information comprising at least one parameter associated with a quad-tree partition structure; and

an entropy coding block, coupled to the fidelity enhancement block, for encoding the fidelity enhancement information, and embedding the encoded fidelity enhancement information into the encoded bitstream.

2. The encoder of claim **1**, wherein the fidelity enhancement technique comprises Wiener filtering, Kalman filtering, noise reduction, deblurring, regression, and regularization.

3. The encoder of claim **1**, wherein the fidelity enhancement block performs Wiener filtering, generates auto correlation and cross correlation matrices for a smaller area of the video frame, and reuses the auto correlation and cross correlation matrices for a larger area of the video frame when the larger area includes the smaller area.

4. The encoder of claim **1**, wherein the fidelity enhancement technique is a discrepancy modeling technique comprising DC offset compensation, weighted prediction, and spatial prediction.

5. The encoder of claim **1**, further comprising:

a prediction block, for performing prediction on the video frame to generate prediction residues and prediction information;

a transform and quantization block, coupled to the prediction block, for performing transform and quantization processes on the prediction residues; and

a reconstruction loop, coupled between the transform and quantization block and the prediction block, for reconstructing the video frame according to the prediction residues, the information from the transform and quantization block;

wherein the entropy coding block is coupled to the transform and quantization block, and the fidelity enhancement block is in the reconstruction loop.

6. The encoder of claim **5**, wherein the reconstruction loop further comprises:

a deblocking unit, for performing deblocking to generate the processed data for the fidelity enhancement block.

7. The encoder of claim **5**, wherein the reconstruction loop further comprises:

a reference frame buffer, for buffering processed data of a reference frame;

wherein the fidelity enhancement block performs fidelity enhancement on the processed data retrieved from the reference frame buffer.

8. The encoder of claim **5**, wherein the reconstruction loop further comprises:

an inverse quantization and transform unit, coupled to the transform and quantization unit, for performing inverse quantization and transform processes to generate the processed data;

wherein the fidelity enhancement block receives the processed data from the inverse quantization and transform unit.

9. The encoder of claim **5**, wherein the reconstruction loop further comprises:

an inverse quantization unit, coupled to the transform and quantization unit, for performing inverse quantization process to generate the processed data;

wherein the fidelity enhancement block receives the processed data from the inverse quantization unit.

10. The encoder of claim **1**, wherein the encoded fidelity enhancement information is embedded in the encoded bitstream, and a header of the encoded bitstream comprises a pointer for indicating a location of the fidelity enhancement information in the encoded bitstream.

11. A method for coding a video frame, the method comprising:

receiving a video frame;

utilizing a quad-tree partition method to determine how to partition the video frame;

partitioning the video frame according to a determination result, and performing fidelity enhancement on the video frame to generate fidelity enhancement parameters; and

encoding the video frame with the fidelity enhancement parameters to generate an encoded bitstream.

12. The method of claim **11**, wherein the step of utilizing a quad-tree partition method to determine how to partition the video frame further comprises:

utilizing a top-down splitting algorithm or a bottom-up merging algorithm and comparing a cost function result for determining how to partition the video frame.

13. The method of claim **11**, wherein calculation results for a smaller area of the video frame are reused for a larger area of the video frame when the larger area includes the smaller area.

14. A method for coding a video frame, the method comprising:

receiving a video frame;

performing fidelity enhancement on processed data to generate fidelity enhancement information;

encoding the video frame to generate an encoded bitstream;

encoding the fidelity enhancement information, and embedding the encoded fidelity enhancement information into the encoded bitstream; and

generating a pointer indicating a location of the fidelity enhancement information in the encoded bitstream.

15. The method of claim **14**, wherein fidelity enhancement comprises filtering and discrepancy modeling.

16. A method for decoding a bitstream, the method comprising:

receiving a bitstream;

retrieving a pointer from a header in the bitstream, wherein the pointer indicates a location of fidelity enhancement information in the bitstream;

constructing a video frame by decoding processes; and

performing fidelity enhancement on processed data using the fidelity enhancement information.

17. The method of claim **16**, wherein fidelity enhancement comprises filtering and discrepancy modeling.

18. A decoder for receiving a bitstream to generate a video frame, comprising:

an entropy decoding unit, for decoding the bitstream to generate residues and fidelity enhancement information, wherein the fidelity enhancement information comprises at least one parameter associated with a quad-tree partition structure; and

a reconstruction loop, coupled to the entropy decoding unit, for reconstructing the video frame from the residues, wherein the reconstruction loop comprises:

a fidelity enhancement block, for receiving the fidelity enhancement information from the entropy decoding unit, and performing fidelity enhancement according to the quad-tree partition structure derived from the fidelity enhancement information.

19. An encoder for receiving a video frame and performing encoding processes to generate an encoded bitstream, the encoder comprising:

a prediction block, for performing prediction on the video frame to generate prediction residues and prediction information;

a transform and quantization block, coupled to the prediction block, for performing transform and quantization processes on the prediction residues;

a reconstruction loop, coupled between the transform and quantization block and the prediction block, for reconstructing the video frame according to the prediction residues and the information from the transform and quantization block; wherein the reconstruction loop comprises:

a reference frame buffer; and

a discrepancy modeling block, for performing a discrepancy modeling technique on processed data, and generating discrepancy modeling information; and

an entropy coding block, for encoding residues with the discrepancy modeling information into the encoded bitstream.

20. The encoder of claim **19**, wherein the discrepancy modeling technique comprises DC offset compensation, weighted prediction, and spatial prediction.

21. The encoder of claim **19**, wherein the discrepancy modeling block receives the processed data of a reference frame from the reference frame buffer and performs discrepancy modeling to reduce errors between the reference frame and the video frame.

22. The encoder of claim **19**, wherein the discrepancy modeling block receives the processed data of the video frame, performs discrepancy modeling to reduce errors between processed and unprocessed data of the video frame, and stores compensated processed data in the reference frame buffer.

23. A decoder for receiving a bitstream to generate a video frame, comprising:

an entropy decoding unit, for decoding the bitstream to generate residues and discrepancy modeling information; and

a reconstruction loop, coupled to the entropy decoding unit, for reconstructing the video frame from the residues, wherein the reconstruction loop comprises:

a discrepancy modeling block, for receiving the discrepancy modeling information from the entropy decoding unit, and applying a discrepancy modeling technique on processed data according to the discrepancy modeling information.

24. The decoder of claim **23**, wherein the discrepancy modeling technique comprises DC offset compensation, weighted prediction, and spatial prediction.

25. The decoder of claim **23**, wherein the reconstruction loop further comprises a reference frame buffer, and the discrepancy modeling block receives the processed data of a reference frame from the reference frame buffer and performs discrepancy modeling according to the discrepancy modeling information.

26. The decoder of claim **23**, wherein the reconstruction loop further comprises a reference frame buffer, and the discrepancy modeling block receives the processed data of the video frame, performs discrepancy modeling according to the discrepancy modeling information, and stores compensated processed data in the reference frame buffer.

* * * * *