(19) [Issuing Country] Japan Patent Office (JP)
(12) [Publication Name] Gazette of Unexamined Patent Applications (A)
(11) [Publication Number] 2007-316161 (P2007-316161A)
(43) [Publication Date] December 6, 2007 (2007.12.6)

(51) [Int.Cl.] G09G 5/00 (2006.01)
G09G 5/391 (2006.01)
G09G 3/20 (2006.01)
G09G 3/36 (2006.01)
G09G 5/36 (2006.01)
[FI] G09G 5/00 520V
G09G 3/20 632C
G09G 3/20 650C
G09G 3/20 632G
G09G 3/36
[Theme Codes (Reference)] 5B057, 5C006, 5C021, 5C080, 5C082
[Examination Request] Not Yet Received
[Number of Claims] 14
[Application Format] Online (OL)
[Foreign Language Application]
[Total Number of Pages] 27
Continued on Last Page

(21) [Application Number] 2006-143276 (P2006-143276)
(22) [Filing Date] May 23, 2006 (2006.5.23)
(71) [Applicant]
[Identification Number] 000005821
[Name] Matsushita Electric Industrial Co., Ltd.
[Address] 1006 Kadoma, Kadoma-shi, Osaka
(74) [Agent]
[Identification Number] 100109210
[Attorney]
[Name] Hiromori NII
(72) [Inventor]
[Name] Chin Phek ONG
[Address] Panasonic Singapore Laboratories Pte., Ltd., 1022 Tai Seng Avenue #06-3530 Tai Seng Industrial Estate Singapore 534415
Continued on Last Page

(54) [Title of the Invention]

Super-Resolution Processing Method and Device Using Residual Interpolation

(57) [Abstract] (Amended)

[Problem]

To provide a super-resolution processing method and device that improves the resolution and quality of image sequences and that reduces grid artifacts.

[Solution]

The method according to the present invention comprises: performing interpolation to generate an initial high-resolution estimated image; performing registration to generate a registered image; blurring the high-resolution estimated image; subtracting the blurred image from the registered image to generate a residual image; interpolating missing residuals using the residual values of surrounding pixels that are not missing; generating a back-projected image from the residual image using a point spreading inverse function; combining the smoothed image with the back-projected image to generate enhancement coefficients; and updating the enhancement coefficients to the high-resolution estimated image and generating a new high-resolution estimated image to interpolate the residual values of the missing pixels from the residual values of the surrounding pixels that are not missing.

[Selected Drawing] Fig. 1a

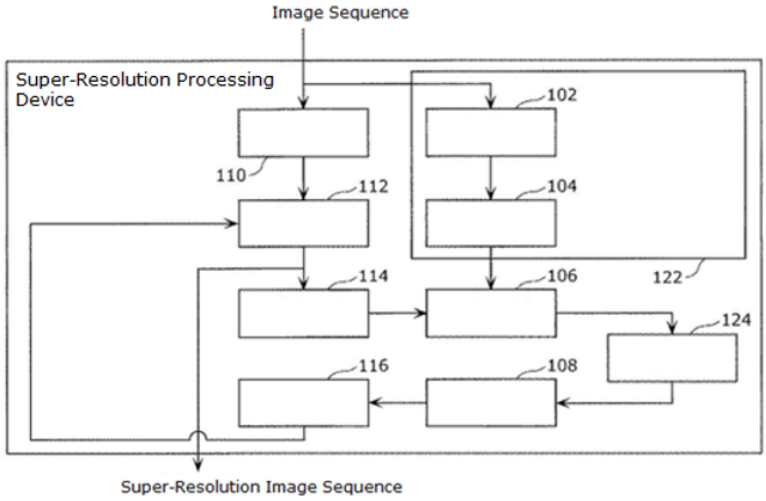

102: Motion detection processing device
104: Registration processing device
106: Frame difference processing device
108: Point spreading inverse function processing device
110: Interpolation processing device
112: High-resolution buffer
114: Point spreading function processing device
116: High-resolution estimation processing device
124: Residual interpolation processing device

[Claims]

[Claim 1]

A method for performing super-resolution processing using residual interpolation on image sequences, the method comprising:
a step (110) of performing interpolation to generate an initial high-resolution estimated image;
a step (122) of performing registration to generate a registered image; and
a step of repeating the steps below:
a step (114) of blurring the high-resolution estimated image using a point spreading function to generate a blurred image;
a step (106) of subtracting the blurred image and the registered image to generate a residual image;
a step (124) of interpolating missing residuals from the residual image using the residual values of surrounding pixels that are not missing;
a step (108) of back-projecting the residual image using a point spreading inverse function to generate a back-projected image;
a step (116) of combining the smoothed image and the back-projected image to generate enhancement coefficients; and
a step (112) of updating the enhancement coefficients to the high-resolution estimated image to generate a new high-resolution estimated image.

[Claim 2]

The method according to claim 1 in which registration is performed to generate a registered image, wherein the method comprises:
a step (102) of performing motion compensation to generate warping vectors; and
a step (104) of registering an image based on the warping vectors to generate a registered image.

[Claim 3]

The method according to claim 1 in which missing residuals are interpolated from the residual image using the residual values of the surrounding pixels that are not missing, the method comprising:
a step (S502) of checking whether a target pixel has a residual value;
a step (S504) of checking whether surrounding pixels have enough residuals to perform interpolation if the target pixel does not have a residual value;
a step (S506) of interpolating the residual value of the target pixel from the residual values of surrounding pixels if the target pixel does not have a residual value and if the surrounding pixels do not (sic) have enough residuals to perform interpolation;
a step (S510) of checking whether other pixels are present;
a step (S508) of setting the target pixel as the next pixel in the scanning order if no other pixels are present;
a step of repeating the process from the step of checking whether the target pixel has a residual value if no other pixels are present; and
a step of ending the process when it has been confirmed that no other pixels are present.

[Claim 4]

The method according to claim 3 in which missing residuals are interpolated from the residual image using the residual values of the surrounding pixels that are not missing,

wherein the scanning order is raster scanning and reverse raster scanning or any other scanning order.

[Claim 5]

The method according to claim 1 in which missing residuals are interpolated from the residual image using the residual values of the surrounding pixels that are not missing, wherein the method further comprises a step of repeating the method according to claim 3 so that new interpolated residual values can be generated using the interpolated residual values.

[Claim 6]

The method according to claim 1 in which missing residuals are interpolated from the residual image using the residual values of the surrounding pixels that are not missing, wherein the method further comprises a step of using a different scanning order for each pass during residual interpolation.

[Claim 7]

The method according to claim 1 in which missing residuals are interpolated from the residual image using the residual values of the surrounding pixels that are not missing, wherein the method comprises:
a step (S606) of checking whether a target pixel has a residual value;
a step (S608) of checking whether the previous pixel and the next pixel have a residual value if the target pixel does not have a residual value;
a step (S610) of interpolating the residual value of the target pixel from the residual values of the previous pixel and the next pixel if the target pixel has no residual value and if the previous pixel and the next pixel have residual values;
a step (S614) of checking whether other pixels are present;
a step (S612) of setting the target pixel as the next pixel in the scanning order if no other pixels are present;
a step of repeating the process from the step of checking whether the target pixel has a residual value if no other pixels are present; and
a step of ending the process when it has been confirmed that no other pixels are present.

[Claim 8]

A device for performing super-resolution processing using residual interpolation on image sequences, the device comprising:
a means (110) for performing interpolation to generate an initial high-resolution estimated image;
a means (122) for performing registration to generate a registered image; and
means for repeating the steps below:
a means (114) of blurring the high-resolution estimated image using a point spreading function to generate a blurred image;
a means (106) of subtracting the blurred image and the registered image to generate a residual image;
a means (124) of interpolating missing residuals from the residual image using the residual values of surrounding pixels that are not missing;
a means (108) of back-projecting the residual image using a point spreading inverse function to generate a back-projected image;

a means (116) of combining the smoothed image and the back-projected image to generate enhancement coefficients; and
a means (112) of updating the enhancement coefficients to the high-resolution estimated image to generate a new high-resolution estimated image.

[Claim 9]

A large scale integrated (LSI) circuit for performing super-resolution processing using residual interpolation on image sequences, the LIS (sic) circuit comprising:
a unit (110) for performing interpolation to generate an initial high-resolution estimated image;
a unit (122) for performing registration to generate a registered image; and
a unit for repeating the steps below:
a unit (114) for blurring the high-resolution estimated image using a point spreading function to generate a blurred image;
a unit (106) for subtracting the blurred image and the registered image to generate a residual image;
a unit (124) for interpolating missing residuals from the residual image using the residual values of surrounding pixels that are not missing;
a unit (108) for back-projecting the residual image using a point spreading inverse function to generate a back-projected image;
a unit (116) for combining the smoothed image and the back-projected image to generate enhancement coefficients; and
a unit (112) for updating the enhancement coefficients to the high-resolution estimated image to generate a new high-resolution estimated image.

[Claim 10]

A pre-processing or post-processing device that performs super-resolution processing using residual interpolation, the device comprising:
a means (202) for inverse multiplexing an input source, as required, to produce an uncompressed image sequence or an encoded video bitstream and another bitstream;
a means (204) for decoding the encoded video bitstream, as required, to generate a decoded image sequence and optionally auxiliary data;
a means (206) for optionally pre-processing the decoded image sequence or uncompressed image sequence to generate a processed image sequence;
a means (208) for performing the super-resolution processing using residual interpolation according to claims 1 to 9 on the processed image sequence to generate a super-resolution image sequence;
a means (210) for optionally post-processing the super-resolution image sequence to generate a processed super-resolution image sequence (210);
a means (212) for optionally compressing and optionally storing the processed super-resolution image sequence (212); and
a means (214) for optionally displaying the processed super-resolution image sequence.

[Claim 11]

A device that performs super-resolution processing using residual interpolation in an encoder, the device comprising:
a means (306) for performing intra prediction;
a means (302) for performing motion detection;
a means for performing transformation (304);
a means (308) for performing quantization;

a means (310) for performing entropy encoding;
a means for performing inverse quantization (312);
a means (314) for performing inverse transformation;
a means (316) for performing inverse intra prediction;
a means (318) for performing motion compensation; and
a means (320) for performing the super-resolution processing using residual interpolation according to claims 1 to 9 on a reference image used for motion detection and motion compensation.

[Claim 12]

A device that performs super-resolution processing using residual interpolation in a decoder, the device comprising:
a means (340) for performing entropy decoding;
a means (342) for performing inverse quantization;
a means (344) for performing inverse transformation;
a means (346) for performing inverse intra prediction;
a means (350) for performing motion compensation; and
a means (348) for performing the super-resolution processing using residual interpolation according to claims 1 to 9 on a reference image used for motion compensation.

[Claim 13]

A device that performs super-resolution processing using residual interpolation in an encoder that uses interlayer prediction, the device comprising:
a means (402) for encoding a basic layer;
a means (412) for encoding an enhanced layer using interlayer prediction;
a means (404) for performing interlayer residual prediction between the enhanced layer and the basic layer;
a means (406) for performing interlayer motion data prediction between the enhanced layer and the basic layer;
a means (408) for performing interlayer intra-prediction between the enhanced layer and the basic layer; and
a means (410) for performing the super-resolution processing using residual interpolation according to claims 1 to 9 on the intra-image or decoded image of the basic layer used as an additional reference for encoding the enhanced layer.

[Claim 14]

A device that performs super-resolution processing using residual interpolation in a decoder that uses interlayer prediction, the device comprising:
a means (422) for decoding a basic layer;
a means (432) for decoding an enhanced layer using interlayer prediction;
a means (424) for performing interlayer residual prediction between the enhanced layer and the basic layer;
a means (426) for performing interlayer motion data prediction between the enhanced layer and the basic layer;
a means (428) for performing interlayer intra-prediction between the enhanced layer and the basic layer; and
a means (430) for performing the super-resolution processing using residual interpolation according to claims 1 to 9 on the intra-image or decoded image of the basic layer used as an additional reference for decoding the enhanced layer.

[Detailed Description of the Invention]

[Technical Field]

[0001]

The present invention is applicable to any type of image/video processing, especially image/video super-resolution processing.

[Background Art]

[0002]

Super-resolution processing is a technique for generating high-resolution images from a plurality of low-resolution images. This technique can be used in display devices such as plasma display panels (PDP), liquid crystal displays (LCD), and cathode ray tubes (CRT) to improve the resolution and quality of the inputted image sequences to be displayed. When super-resolution processing is used in recording devices such as hard disk recorders and digital versatile disc (DVD) recorders, the resolution and quality of images subject to transcoding and storage can be improved. Super resolution can also be used for printing purposes. In this case, an image sequence from a camera recorder or digital camera can be processed to produce a single high-resolution, high-quality image. When applied to surveillance, the resolution and image quality of faces and vehicle license plates can similarly be improved.

[0003]

Super-resolution processing methods include methods that involve image registration. In these methods, motion compensation is performed on observed low-resolution images to convert them into a common high-resolution grid known as a registered image. An initial estimated high-resolution frame is obtained using a spatial interpolation method such as bicubic interpolation. This estimated frame is improved by repeatedly subjecting it to blurring, frame difference, point spreading inverse function, regularization, and refinement processing. A residual image is generated during the operation of finding frame differences. The registered image is thus subtracted from the blurred high-resolution estimated frame. For more information on super-resolution processing, see, for example, U.S. Patent Application No. 2004/0156561A1 and U.S. Patent Application No. 2005/0019000A1.

[Disclosure of the Invention]

[Problem to Be Solved by the Invention]

[0004]

In order to obtain a good quality super-resolution image, it is important that the registered image be of good quality. Accurate registration requires accurate motion compensation and sub-pixel shifting between the target image and surrounding images. There will be missing pixels in the registered image if subpixel shifting is not performed. As a result, the residual image will have similar missing pixels. Corresponding missing pixels in the high-resolution estimation image produces less fine detail than in similar images without missing pixels. The problem is that missing pixels occur regularly, resulting in grid artifacts. This causes edges to appear jagged or serrated. For example, in the case of 2x resolution up sampling, the pattern alternates between high, low, and high luminance on a pixel by pixel basis.

[Means for Solving the Problem]

[0005]

The present invention uses residual interpolation to solve this grid artifact problem. In residual interpolation, the residual value of a missing pixel is interpolated from the residual values of surrounding pixels that are not missing.

[Effects of the Invention]

[0006]

The present invention is novel in that it uses residual interpolation to prevent grid artifacts. Regularization can also prevent grid artifacts by adding smoothing constraints to high-resolution estimated images. However, because the smoothing constraints apply to the entire image, the smoothing strength has to be controlled. Blurring occurs in areas that do not require smoothing, and if the strength is not set properly, the blurring will be excessive or insufficient.

[0007]

Since residual interpolation is performed on missing pixels, areas where no pixels are missing are not blurred. Also, the residual interpolation strength is established on the basis of the value of the residual itself. Hence, a larger residual value results in a larger interpolated value, and vice versa.

[0008]

The result is a better super-resolution algorithm that produces sharper images compared to the use of regularization.

[0009]

Residual interpolation can be combined with regularization. This combination ca reduce the intensity of regularization and prevent excessive blurring.

[Best Mode for Carrying Out the Invention]

[0010]

Post-Processing and Pre-Processing Devices

Fig. 2 is a block diagram showing use of the super-resolution processing device in a post-processing or pre-processing device. The input D252 is composed of video and/or audio sources, etc. If necessary, the video source is separated from the other sources using an inverse multiplexer 202. If necessary, other sources or other bitstreams D256 are processed by other processing devices. The video source may also be compressed. In this case, the encoded video bit stream D258 is decoded by a video decoder 204 to generate a decoded image sequence D262. The video source does not have to be compressed. In this case, an uncompressed image sequence D254 is used. Optionally, the image sequence D262, D254 may be processed using a pre-processing device 206 to generate a processed image sequence D264. The super-resolution processing device 208 processes the image sequence

to produce a super-resolution image sequence D266. The super-resolution processing device 208 also performs residual interpolation. If the video source is compressed, the super-resolution processing device can optionally use auxiliary data D260 from the encoded video bitstream. Examples of auxiliary data include motion vectors, quantization parameters, and the deblocking filter strength. The super-resolution image sequence may be further processed by a post-processing device 210. The processed super-resolution image sequence D268 can be displayed using a display unit 214. Optionally, it may be stored using a storage device 212. Compression may also be used for storage on the storage device 212.

[0011]

Encoding and Decoding Devices

Fig. 3a and Fig. 3b are two block diagrams showing use of the super-resolution processing device in, respectively, an encoding device (encoder) and a decoding device (decoder). In the encoder, the image sequence is intra-coded or inter-coded. An intra-prediction processing device 306 uses the information in the target frame to make predictions. A motion detection processing device 302 performs motion compensation prediction by referring to other frames. The resulting images from the processing devices 302, 306 are then processed by a transform processing device 304, quantization processing device 308, and entropy processing device 310 to produce an encoded video bit stream. The target frame is reconstructed using a local decoder equipped with an inverse quantization processing device 312, an inverse transform processing device 314, a motion compensation processing device 318, and an inverse intra prediction processing device 316, and the reconstructed target frame is stored as a reference frame for use by the motion detection processing device 302. The present invention uses a super-resolution processing device 320 to improve the quality and resolution of reference frames used by the motion detection processing device 302 and motion compensation processing device 318. The super-resolution processing device 320 also performs residual interpolation. Optionally, auxiliary data such as motion vectors, quantization parameters, and deblocking filter strength can be used in the super-resolution processing device 320.

[0012]

In the decoder, the image sequence is reconstructed from the encoded video bitstream using an entropy decoding processing device 340, inverse quantization processing device 342, inverse transform processing device 344, inverse intra prediction processing device 346, and motion detection processing device 350. As with the encoder, a super-resolution processing device 348 is used to improve the quality and resolution of reference frames. The super-resolution processing device 348 also performs residual interpolation. Optionally, auxiliary data such as motion vectors, quantization parameters, and deblocking filter strength can be used in the super-resolution processing device 348. The super-resolution processing device 348 also improves displayed images as well.

[0013]

The encoder and decoder described above have been simplified. There are now encoders and decoders that use advanced tools to further improve image quality, such as deblocking filters. In the present invention, encoding and decoding do not have to be performed as shown in Fig. 3a and Fig. 3b. Here, one example has been given of how super-resolution processing can be used in encoders and decoders to improve encoding efficiency or picture quality by improving the reference frames used for motion detection, motion compensation prediction, and display.

[0014]

Interlayer Predictive Encoding and Decoding Devices

Fig. 4a and Fig. 4b are two block diagrams showing use of a super-resolution processing device for intra-layer prediction in, respectively, an encoding device (encoder) and decoding device (decoder). Interlayer prediction is used for hierarchical encoding in order to improve encoding efficiency. One example of hierarchical encoding that uses interlayer prediction is the working draft for applying scalable extensions to ISO/IEC 1496-10, also known as scalable video encoding. A basic layer image sequence is encoded using a basic layer encoding processing device 402. An enhanced layer image sequence is encoded using an enhanced layer encoding processing device 412. The enhanced layer encoding processing device 412 uses interlayer prediction to reduce redundancy between the enhanced layer and the basic layer, thereby improving encoding efficiency compared to encoding performed using only an enhanced layer. Redundancy between enhanced layer residuals and basic layer residuals is reduced using an interlayer residual prediction processing device 404. Redundancy between motion data in the enhanced layer and the basic layer is reduced using an interlayer motion data prediction processing device 406. Examples of motion data include the partition size and type used of each macroblock, as well as the prediction direction and motion vector. The interlayer intra-prediction processing device 408 uses an intra image of the basic layer or a reconstructed image of the basic layer as an additional reference image for encoding the image of the enhanced layer. A super-resolution processing device 410 is used to improve these additional reference images. The super-resolution processing device 410 also performs residual interpolation. Optionally, auxiliary data such as motion vectors, quantization parameters, and deblocking filter strength can be used in the super-resolution processing device 410.

[0015]

In the decoder, the basic layer bitstream is decoded using a basic layer decoding processing device 422. An enhanced layer decoding processing device 432 decodes the enhanced layer bitstream using an interlayer residual prediction processing device 424, interlayer motion data prediction processing device 426, and interlayer intra prediction processing device 428. As in the encoder, a super-resolution processing device 430 is used to improve the reference picture from the inter-layer intra-prediction processing device 428. The super-resolution processing device 430 also performs residual interpolation. Optionally, auxiliary data such as motion vectors, quantization parameters, and deblocking filter strength can be used in the super-resolution processing device 430.

[0016]

Super-Resolution Processing Device

Fig. 1a is a block diagram showing the processing devices (functional blocks) in the super-resolution processing device. The interpolation processing device 110 interpolates frames subject to super-resolution. Well-known interpolation methods include bilinear interpolation, bicubic interpolation, and Lanczos interpolation. The interpolated image is stored in a high-resolution buffer 112. This is used as the initial high-resolution estimated image. The image sequence is registered by the processing devices in section 122. Section 122 is equipped with a motion detection processing device 102 that calculates warping vectors between a reference frame and a target frame. An registration processing device 104 performs registration based on the warping vectors. The point spreading function processing device

114 blurs the high-resolution estimated image in the high-resolution buffer 112. The frame difference processor 106 calculates the difference (residual) between the registered image and the blurred high-resolution estimated image. The residual interpolation processing device 124 interpolates the residual values of missing pixels from the residual values of surrounding pixels that are not missing. The point spreading inverse processing device 108 back-projects the differences (residuals) onto a high-resolution grid. The high-resolution estimation processing device 116 combines the back-projected differences with the smoothing constraints to generate enhancement coefficients. These enhancement factors are then used to update the high-resolution estimated image. This completes one cycle of the improvement process. This process is repeated using processing devices 114, 106, 124, 108, 116, and 118. This process may be repeated until a predetermined number of cycles has been reached, or until the values of the enhancement coefficients fall below a certain threshold value. The adaptive enhancement process may be performed on a pixel-by-pixel basis, and only certain pixels selected for further enhancement.

[0017]

Fig. 1b is a block diagram showing the processing devices (functional blocks) in a super-resolution processing similar to the one in Fig. 1a. The one on Fig. 1b differs in that an illuminance masking and/or illuminance compensation processing device 120 and regularization processing device 118 have been added. These two processing devices are optional. Processing device 120 calculates the illuminance compensation value and illuminance mask used by the registration processing device 104. Processing device 118 is used to calculate the smoothing constraints used by processing device 116.

[0018]

Residual Interpolation (General Case)

Fig. 5 is a flow diagram showing the residual interpolation performed in a general case. All pixels in the residual image are scanned. The scanning order is the raster scanning order or reverse raster scanning order. In raster scanning, the first line is scanned from left to right, then the second line is scanned from left to right, and so on to the last line. In reverse raster scanning, the first column is scanned from top to bottom, then the second column is scanned from top to bottom, and so on to the last column. Other scanning orders may be used. Step S502 checks whether the target pixel has a residual. In other words, it checks whether the target pixel is a missing pixel. If there is a residual, step S504 checks whether there are enough residuals in the surrounding pixels for interpolation. For example, if a 2-tap filter is used, there should be two residual values at the corresponding locations. Alternatively, the interpolation filter may be varied to match local characteristics in the residual image. For example, a 6-tap AVC filter is used when six values are present, and a 2-tap bilinear filter used when only two values are present, such as, along an edge. If there are sufficient residuals, the residual value of the target pixel is interpolated from the surrounding pixels in step S506. Step S510 is performed when it has been confirmed in step S502 that the target pixel has a residual, or when there are not enough peripheral residuals for interpolation in step S504, or after step S506. Step S510 checks whether other pixels are present. If not, the process ends. If so, the next pixel in the scanning order is set as the target pixel in step S508, and the process in step S502 is repeated.

[0019]

The process is repeated and the interpolated residuals in the current process are used to interpolate other missing pixels in the next process. It is also possible to perform the initial

residual interpolation process using raster scanning and a horizontal interpolation filter, and the second residual interpolation process using inverse raster scanning and a vertical interpolation filter. This is useful when using a two-dimensional separation-type interpolation filter.

[0020]

Residual Interpolation (Specific Example)

Fig. 6b is a flow diagram for residual interpolation in the specific case of a 2x scale ratio/2-tap bilinear interpolation filter. Fig. 6a shows the location residuals 602 and interpolated residuals 604 in this specific example. Because the scale ratio is twice as large, the missing pixels are arranged in alternating fashion. Two-pass processing is performed, in which horizontal interpolation with raster scanning is performed in the first pass and vertical interpolation with inverse raster scanning is performed in the second pass. In each pass, the following steps are performed. Step S606 checks to determine whether the target pixel has a residual. If not, step S608 checks whether the previous pixel and the next pixel in the scanning order have residuals. This is because a 2-tap bilinear interpolation filter is used. If possible, in step S610, the average of the residual value of the previous pixel and the next pixel is set as the residual value of the target pixel. Step S614 checks whether other pixels are present. If not, the process ends. If so, the next pixel in the scanning order is set as the target pixel in step S612, and the process in step S606 is repeated.

[0021]

System LSI

The functional blocks in a super-resolution processing device using residual interpolation are usually realized in the form of a large scale integrated (LSI) circuit. This LSI may be a single chip or multiple chips. The LSI used here is sometimes referred to as an IC, system LSI, super LSI, or ultra LSI, depending on the degree of integration.

[0022]

The integration of the function blocks is not limited to an LSI, and may be realized using dedicated circuits or general-purpose processors. A field programmable gate array (FPGA) that can be programmed after LSI production or a reconfigurable processor that ca reconfigure the connections and settings of circuit cells inside the LSI may also be used.

[0023]

If an integrated circuit technique that ca replace LSI emerges as a result of advances in manufacturing techniques, integration may naturally be performed using that technique. Adaptation of biotechnology, etc. is also a possibility.

[Brief Description of the Drawings]

[0024]

[Fig. 1a]

Fig. 1a is a block diagram showing the processing devices in the super-resolution processing device.

[Fig. 1b]

Fig. 1b is a block diagram showing the processing devices in a super-resolution processing device similar to the one in Fig. 1a, except that a regularization processing device and an illuminance masking and/or illuminance compensation processing device have been added.

[Fig. 2]

Fig. 2 is a block diagram showing use of the super-resolution processing device for post-processing or pre-processing purposes.

[Fig. 3a]

Fig. 3a is a block diagram showing use of the super-resolution processing device in an encoder.

[Fig. 3b]

Fig. 3b is a block diagram showing use of the super-resolution processing device in a decoder.

[Fig. 4a]

Fig. 4a is a block diagram showing use of the super-resolution processing device in an encoder using interlayer prediction.

[Fig. 4b]

Fig. 4b is a block diagram showing use of the super-resolution processing device in a decoder using interlayer prediction.

[Fig. 5]

Fig. 5 is a flow diagram showing residual interpolation in a general case.

[Fig. 6a]

Fig. 6a is a figure showing the location of residuals and interpolated residuals in the specific case of a 2x scale ratio/2-tap bilinear interpolation filter.

[Fig. 6b]

Fig. 6b is a flow diagram for residual interpolation in the specific case of a 2x scale ratio/2-tap bilinear interpolation filter.

[Fig. 1a]

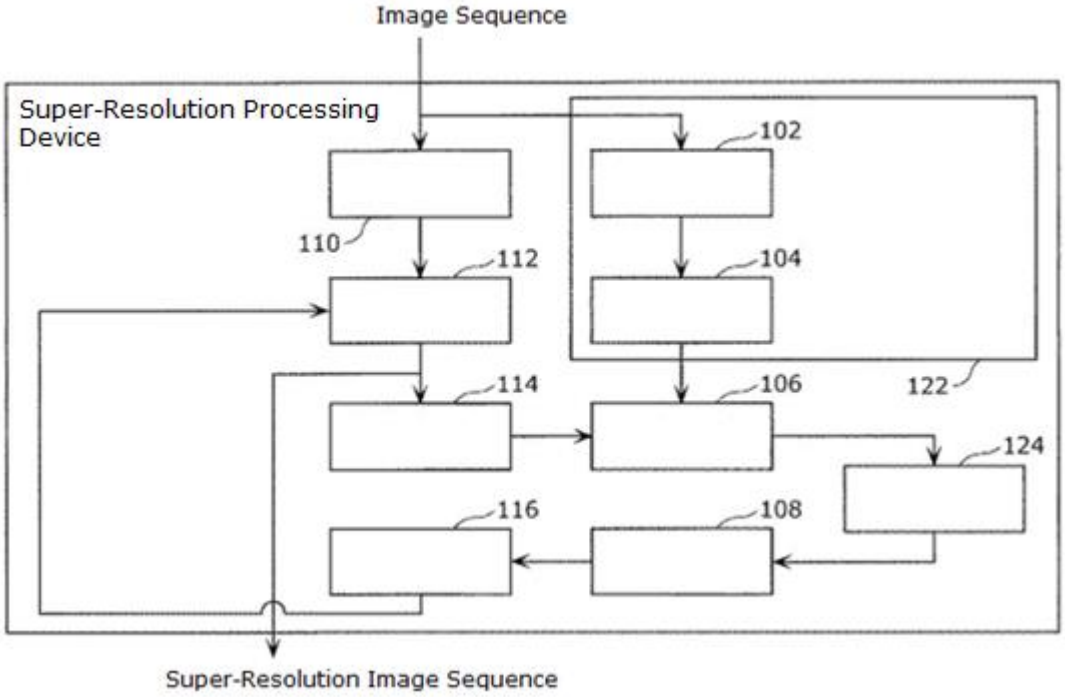

102: Motion detection processing device
104: Registration processing device
106: Frame difference processing device
108: Point spreading inverse function processing device
110: Interpolation processing device
112: High-resolution buffer
114: Point spreading function processing device
116: High-resolution estimation processing device
124: Residual interpolation processing device

[Fig. 1b]

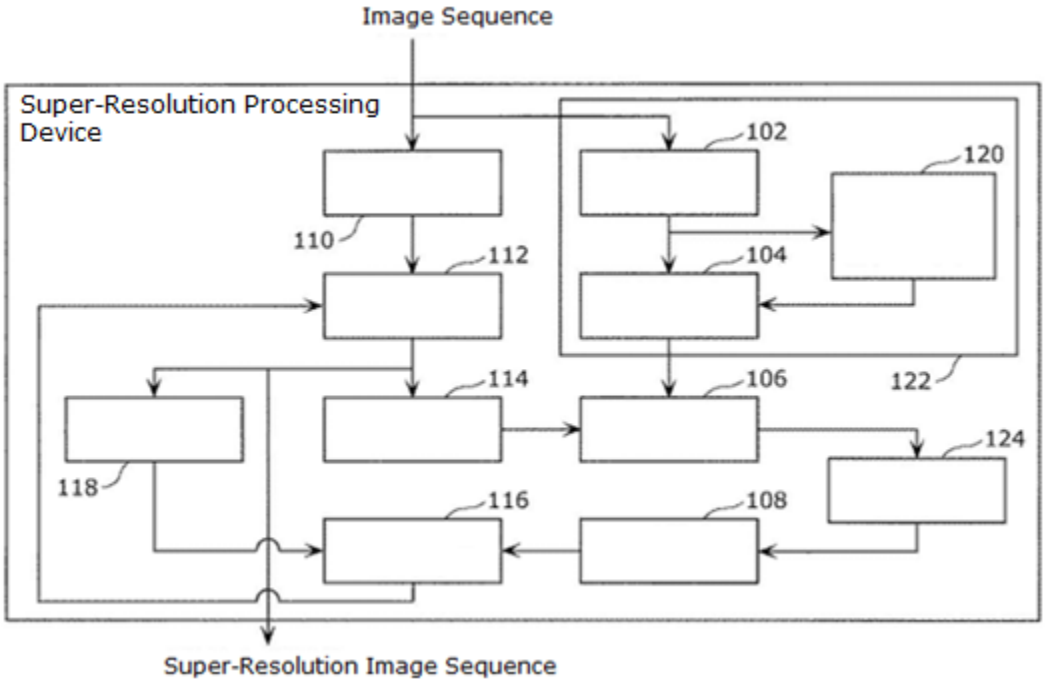

102: Motion detection processing device
104: Registration processing device
106: Frame difference processing device
108: Point spreading inverse function processing device
110: Interpolation processing device
112: High-resolution buffer
114: Point spreading function processing device
116: High-resolution estimation processing device
118: Regularization processing device
120: Illuminance masking and/or illuminance compensation processing device
124: Residual interpolation processing device

[Fig. 2]

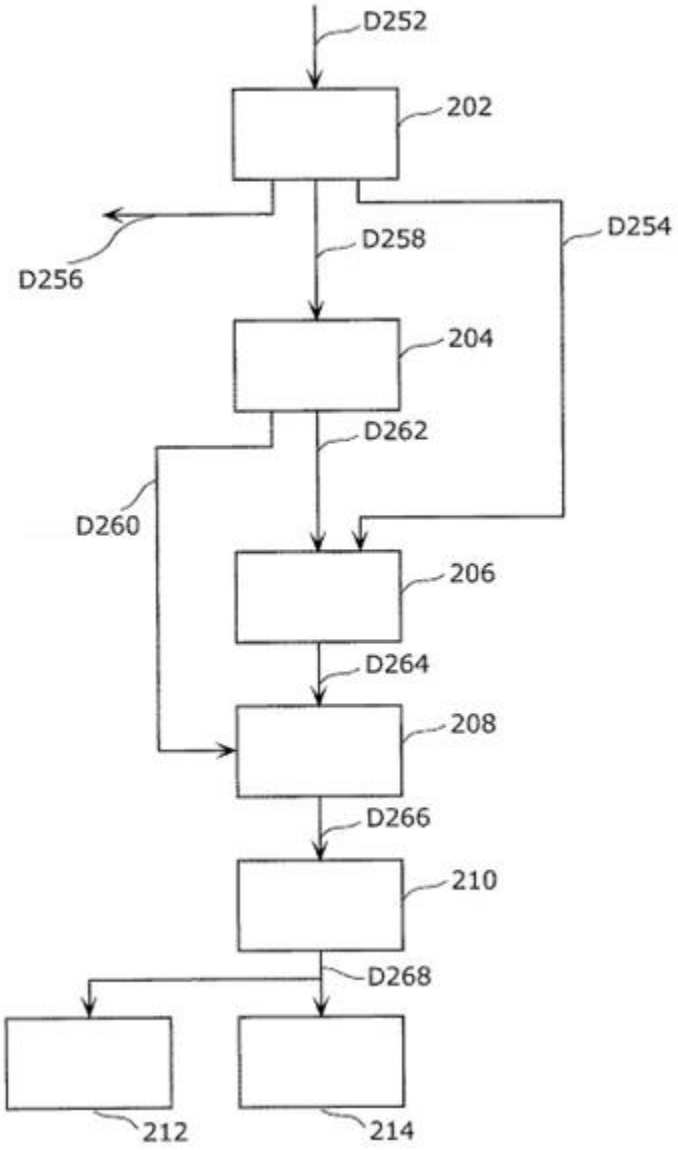

202: Reverse multiplexer
204: Video decoder
206: Pre-processing device (optional)
208: Super-resolution processing device
210: Post-processing device (optional)
212: Storage device
214: Display device

D252: Input video and/or audio source, etc.
D254: Uncompressed image sequence
D256: Other sources or other bit streams (to other processing devices)
D258: Encoded video bitstream
D260: Auxiliary data
D262: Decoded image sequence
D264: Processed image sequence
D266: Super-resolution image sequence
D268: Processed super-resolution image sequence

[Fig. 3a]

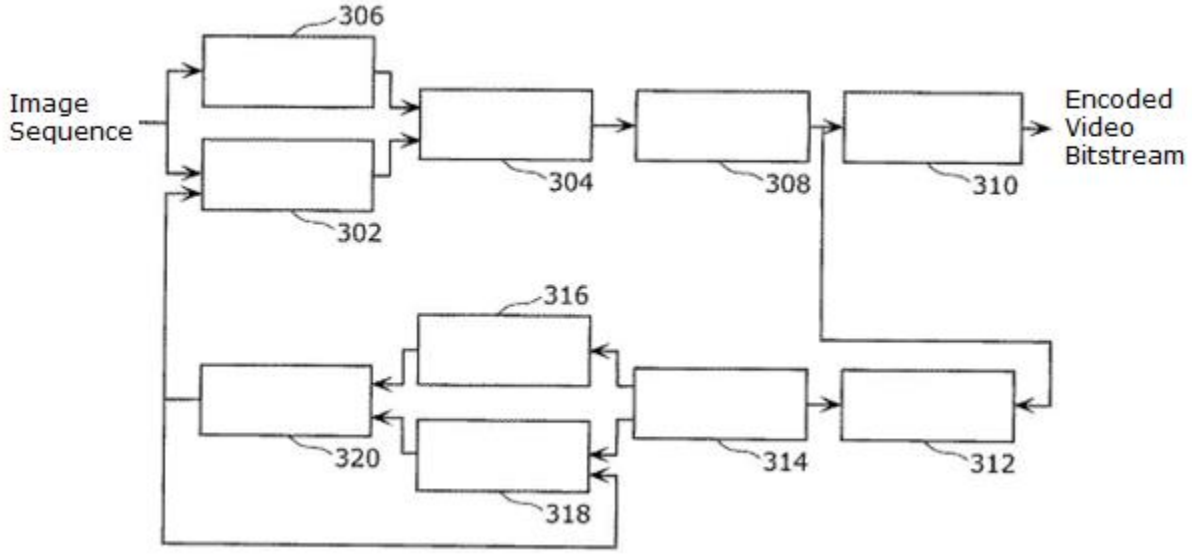

302: Motion detection processing device
304: Conversion processing device
306: Intra-prediction processing device
308: Quantization processing device
310: Entropy processing device
312: Inverse quantization processing device
314: Inverse transform processing device
316: Inverse intra-prediction processing device
318: Motion compensation processing device
320: Super-resolution processing device

[Fig. 3b]

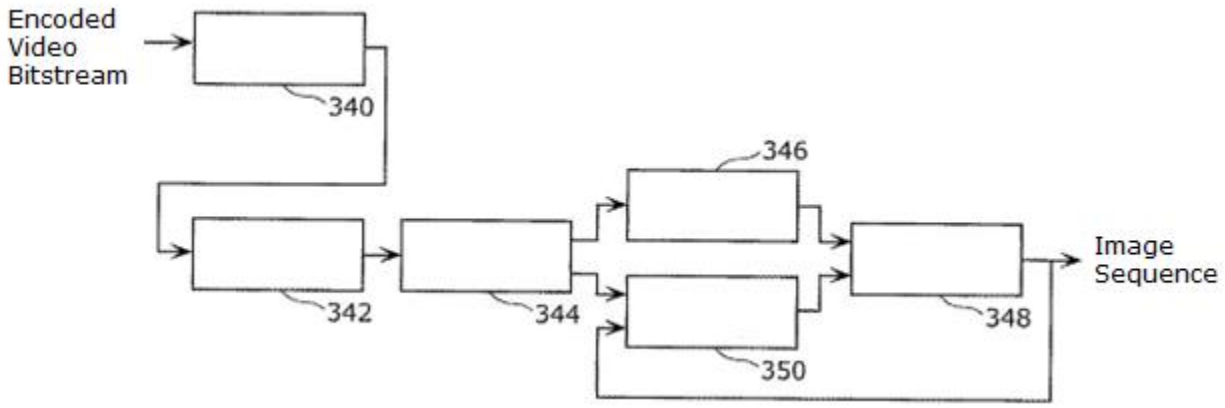

340: Entropy decoding processing device
342: Inverse quantization processing device
344: Inverse transform processing device
346: Inverse intra-prediction processing device
348: Super-resolution processing device
350: Motion detection processing device

[Fig. 4a]

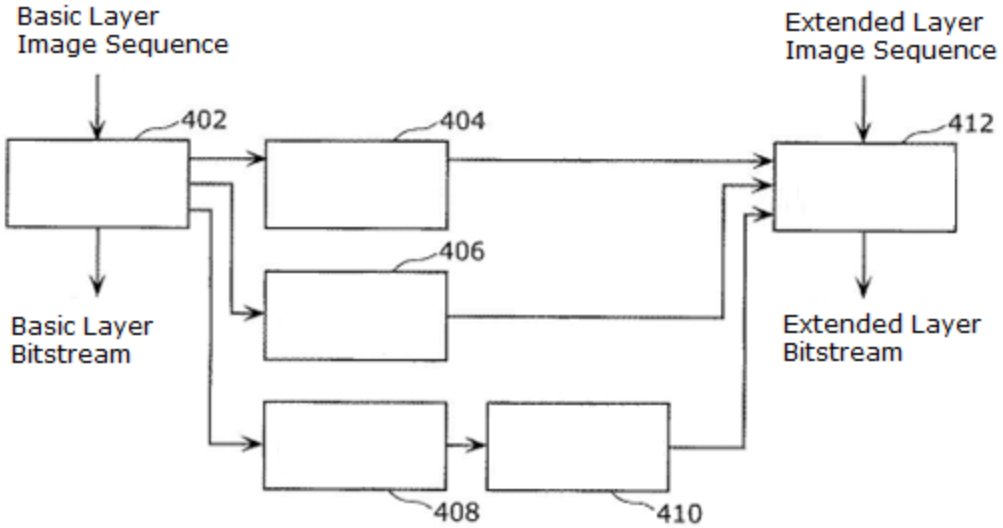

402: Basic layer encoding processing device
404: Interlayer residual prediction processing device
406: Interlayer motion data prediction processing device
408: Interlayer intra-prediction processing device
410: Super-resolution processing device
412: Enhanced layer encoding processing device

[Fig. 4b]

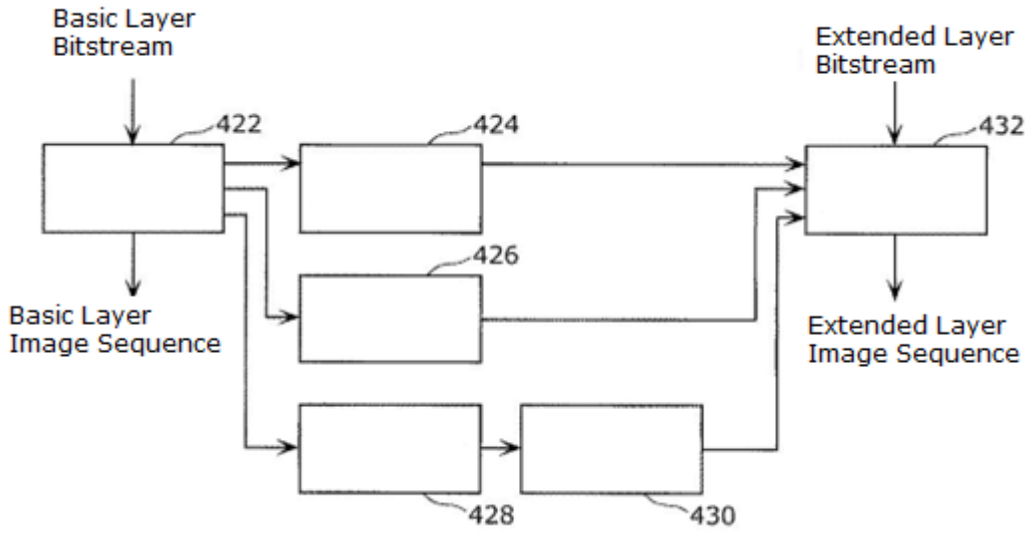

422: Basic layer decoding processing device
424: Interlayer residual prediction processing device
426: Interlayer motion data prediction processing device
428: Interlayer intra-prediction processing device
430: Super-resolution processing device
432: Enhanced layer decoding processing device

[Fig. 5]

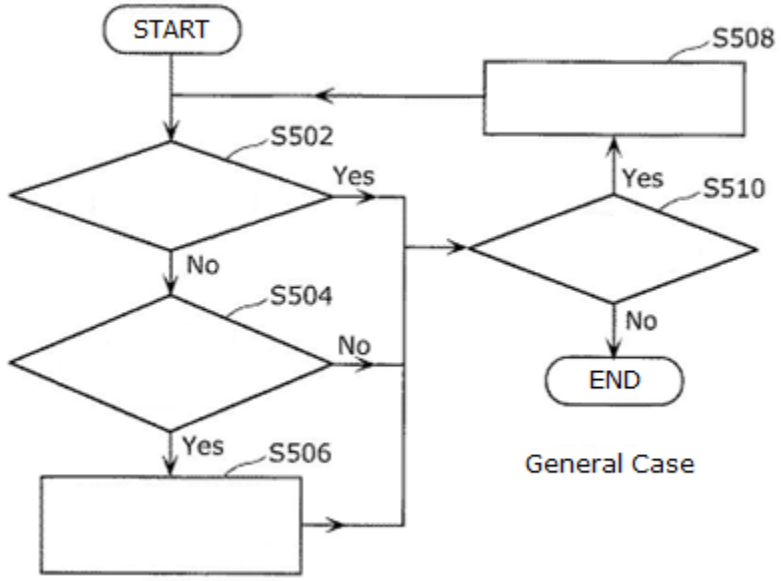

S502: Does target pixel have residuals?
S504: Do surrounding pixels have enough residuals for interpolation?
S506: Interpolate residual value of target pixel from residual values of surrounding pixels
S508: Set next pixel in the scan order as target pixel
S510: Any other pixels?

[Fig. 6a]

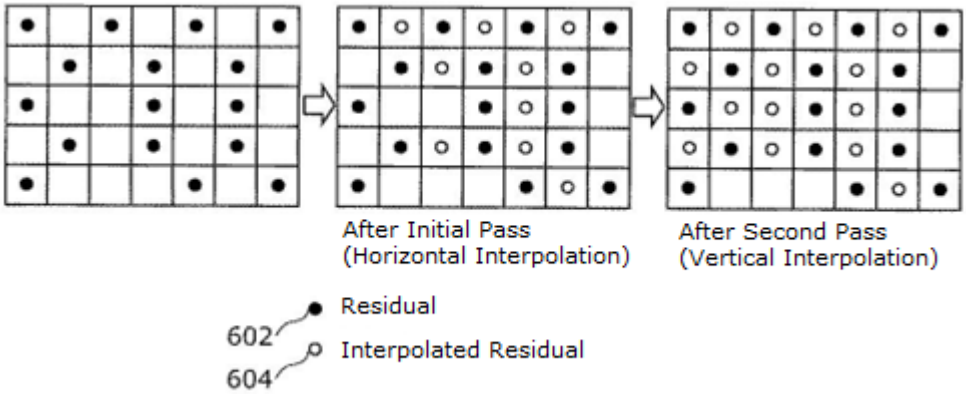

[Fig. 6b]

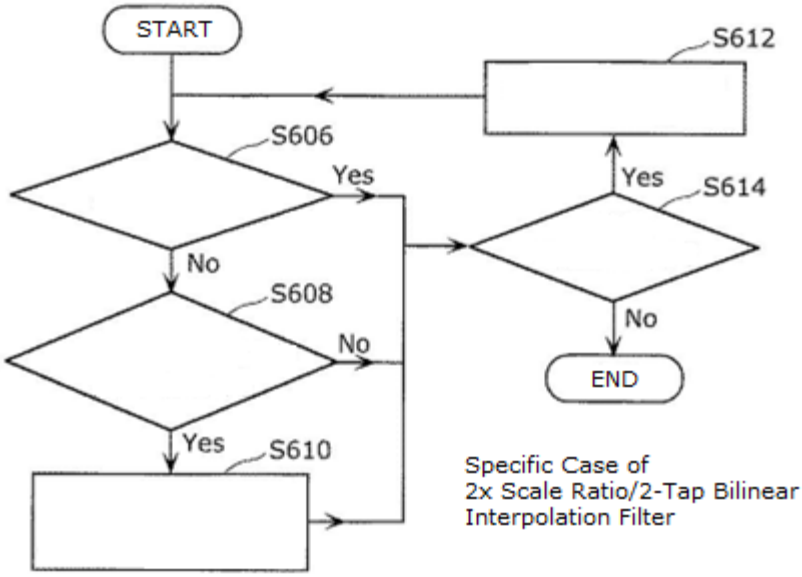

S606: Does target pixel have residuals?
S608: Does previous pixel and next pixel have residuals?
S610: Residual value of target pixel set as average of residual values of previous pixel and next pixel
S612: Set next pixel in scan order as target pixel
S614: Any other pixels?

Continued From Front Page

(51) [Int.Cl.] H04N 5/205 (2006.01)
G06T 1/00 (2006.01)

[FI] G09G 5/36 520C
H04N 5/205
G06T 1/00 280

[Theme Codes (Reference)]

(72) [Inventor]
[Name] Mei Shen SHEN
[Address] Panasonic Singapore Laboratories Pte., Ltd., 1022 Tai Seng Avenue #06-3530 Tai Seng Industrial Estate Singapore 534415

(72) [Inventor]
[Name] Toshiyuki KONDO
[Address] Matsushita Electric Industrial Co., Ltd., 1006 Kadoma, Kadoma-shi, Osaka

(72) [Inventor]
[Name] Tadamasa TOMA
[Address] Matsushita Electric Industrial Co., Ltd., 1006 Kadoma, Kadoma-shi, Osaka

[F Terms (Reference)]
5B057 CC01 CD05 CE06 CG03 CH09 DC32
5C006 AB01 AF04 AF19 AF34 AF44 AF45 AF47 AF61 AF84 BC16 BF02 BF15 BF21 BF28 EB05 EC02 EC09 FA29
5C021 PA58 PA66 PA89 RA01 RA11 RB06 RB08 XA07 XB07
5C080 AA05 AA10 BB05 DD02 DD07 DD25 EE19 EE21 GG10 GG11 GG17 JJ02 JJ07 KK14 KK20
5C082 AA12 AA21 AA32 AA37 BA20 BA41 BB02 BB15 BB22 BD01 BD02 CA21 CA32 CA84 DA55 DA65 DA86 MM01

TRANSLATOR CERTIFICATION

Date: January 3, 2024

To whom it may concern:

I, Frank McGee, a translator fluent in the Japanese and English languages, on behalf of Source IP, declare that I prepared the attached English translation of JP 2007-316161 A ("Phek"). The attached English translation is, to the best of my knowledge and belief, a true and correct English translation of Phek that reflects the intention and meaning of the original text.

I hereby declare that all statements made herein of my own knowledge are true and that all statements made on information and belief are believed to be true; and further that these statements were made with the knowledge that willful false statements and the like so made are punishable by fine or imprisonment, or both, under Section 1001 of Title 18 of the United States Code.

Frank McGee