UNITED STATES PATENT AND TRADEMARK OFFICE
BEFORE THE PATENT TRIAL AND APPEAL BOARD

Samsung Electronics Co. Ltd.
"Samsung"
Petitioner

v.

Advanced Coding Technologies, LLC
"ACT"
Patent Owner

INTER PARTES REVIEW OF U.S. PATENT NO. 10,218,995

DECLARATION OF DR. CLIFFORD READER

I declare that all statements made in this declaration on my own knowledge are true and that all statements made on information and belief are believed to be true, and further, that these statements were made with the knowledge that willful false statements and the like so made are punishable by fine or imprisonment, or both, under Section 1001 of Title 18 of the United States Code.

Date: 1/8/24 By: C Reader

Clifford Reader, Ph.D.

Contents

I. Professional Background 8
A. Summary 8
B. Education 8
C. Work Experience 8
D. Standardization 10
E. Intellectual Property Rights 12
F. Curriculum Vitae 13
II. Digital Video Technologies 13
A. Analog Video 13
B. Digital Video 14
C. Image Restoration; Superresolution 18
D. Image Warping 24
E. Video Coding 26
F. Loop Filters 29
G. Video Coding Standards 32
1. Background 32
2. The MPEG1 Standards 33
3. The MPEG2 Standard 36
4. MPEG Scalability 36
H. The H.263 Standard 42
I. The H.264 Standard 48
III. Relevant Legal Standards 56

IV. Person of Ordinary Skill in the Art 59

V. Overview of the Subject Patent US10218995 60

A. Overview 60

1. Field of Art 60

2. Background - Problem statement, Admitted Prior Art 60

3. Summary of the disclosed subject matter 61

4. Comments 70

B. Claims 72

C. Prosecution History of the '995 Patent 75

VI. Summary of the Applied Prior Art 78

A. Overview of Phek 78

B. Overview of Segall 80

C. Overview of Martins 81

D. Overview of He 82

VII. Claim Construction 85

VIII. Ground 1 – Claims 2-4 and 11 are Obvious under 35 U.S.C. § 103 based on Phek in view of Segall, Martins, and He 85

A. Overview of the Phek-Segall-Martins-He Combination 85

1. Obvious based on Segall to Encode/Decode Phek's Base and (First) Enhancement Layer Streams at the Same Spatial Resolution 86

2. Obvious based on Segall to Implement a Second Enhancement Layer in Phek's System for Spa-tial Scalability 90

3. Obvious based on Segall to Multiplex/Demultiplex Phek's Base and Enhancement Layer Bitstreams 93

4. Obvious based on Martins to Downscale Phek's Super-Resolution Enlarged Reference Pictures 96

5. Obvious based on He to Selectively Apply Phek's/Martin's Super-Resolution (and Downscaling) Loop Filter 103

B. Relevance of the Phek-Segall-Martins-He Combination to the Claims 110

1. Claim 2 110

2. Claim 3 147

3. Claim 4 149

4. Claim 11 152

IX. Additional Remarks 155

I, Clifford Reader, Ph.D., do hereby declare:

1. I am making this declaration at the request of Samsung in the matter of *INTER PARTES* REVIEW OF U.S. PATENT NO. 10,218,995, "the '995 Patent."

2. I am being compensated for my work in this matter at my standard hourly rate of $750 for consulting services. My compensation in no way depends on the outcome of this proceeding or the content of my testimony.

3. In preparing this Declaration, I considered the following materials:

SAMSUNG-1001 U.S. Patent No. 10,218,995 to Sakazume ("the '995 Patent")

SAMSUNG-1002 Excerpts from the Prosecution History of the '995 Patent ("the '995 Patent File History")

SAMSUNG-1005 English Translation of Japanese Patent Publication No. 2007316161 A with Translation Certificate ("Phek")

SAMSUNG-1006 Segall et al., *Spatial Scalability Within the H.264/AVC Scalable Video Coding Extension*; IEEE Transactions on Circuits & Systems for Video Tech., Vol. 17, No. 9, September 2007 ("Segall")

SAMSUNG-1007 Martins et al., *A Unified Approach to Restoration, Deinterlacing and Resolution Enhancement in Decoding MPEG-2 Video*, IEEE Transactions on Circuits & Systems for Video Tech., Vol. 12, No. 9, September 2002 ("Martins")

SAMSUNG-1008 U.S. Patent Publication No.2008/0137753 ("He")

SAMSUNG-1009 U.S. Patent No. 5,886,736 ("Chen")

SAMSUNG-1010 Schwarz et al., *Overview of the Scalable Video Coding Extension of the H.264/AVC Standard*, IEEE Transactions on Circuits & Systems for Video Tech., Vol. 17, No. 9, September 2007 ("Schwarz")

SAMSUNG-1011 U.S. Patent Publication No. 2009/0154567 ("Lei")

SAMSUNG-1012	Park et al., *Super-Resolution Image Reconstruction: A Technical Overview*, IEEE Signal Processing Magazine, pp. 21-36, May 2003 ("Park")
SAMSUNG-1013	English Machine Translation of Japanese Patent Publication No. 2008053848 ("Hatanaka")
SAMSUNG-1014	U.S. Patent Publication No. 2010/0165077 ("Yin")
SAMSUNG-1015	U.S. Patent Publication No. 2009/0257664 ("Kao")
SAMSUNG-1016	U.S. Patent Publication No. 2009/0046995 ("Kanumuri")
SAMSUNG-1017	U.S. Pat. 6,470,051 ("Campisano")
SAMSUNG-1018	U.S. Patent Publication No. 2006/0013306 ("Kim")
SAMSUNG-1019	Lu et al., Mechanisms of MPEG Stream Synchronization, ACG SIGCOMM Computer Communication Review, Vol. 24, Issue 1, pp. 57-67 (January 1994) ("Lu")
SAMSUNG-1020	U.S. Patent Publication No. 2003/0021345 ("Brusewitz")
SAMSUNG-1021	U.S. Patent Publication No. 2003/0021347 ("Lan")
SAMSUNG-1022	EE|Times, *How Video Compression Works* (Aug. 6, 2007), *available at* https://www.eetimes.com/how-video-compression-works (retrieved Dec. 26, 2023) ("EETimes")
SAMSUNG-1023	Bier, *Introduction to Video Compression*, Berkeley Design Tech., Inc. (October 2005), *available at* https://www.bdti.com/MyBDTI/pubs/20051024_GSPx05_Video_Intro.pdf (retrieved Dec. 30, 2023) ("Bier")
SAMSUNG-1024	U.S. Patent No. 7,379,496 ("Holcomb")
SAMSUNG-1025	U.S. Patent Publication No. 2008/0043832 ("Barkley")
SAMSUNG-1026	U.S. Patent No. 6,173,013 ("Suzuki")
SAMSUNG-1030	Ely, *MPEG Video Coding: A Simple Introduction*, EBU Technical Review (Winter 1995) ("Ely")
SAMSUNG-1031	Japanese Patent Publication No. 2007316161 A with English Machine Translation ("Phek")

SAMSUNG-1032	ITU-T Recommendation H.264 (11/07)
SAMSUNG-1033	Karczewicz et al., The SP- and SI-Frames Design for H.264/AVC, IEEE TRANSACTIONS ON CIRCUITS AND SYSTEMS FOR VIDEO TECHNOLOGY, v.13 (July 2003)
SAMSUNG-1034	ISO/IEC 11172-2: 1993 (E) (MPEG1 Video)
SAMSUNG-1035	ISO/IEC 13818-2: 2000 (E) (MPEG2/H.262 Video)
SAMSUNG-1036	ITU-T Recommendation H.263 (02/98)
SAMSUNG-1037	Reader, Intraframe and Interframe Adaptive Transform Coding, Efficient Transmission of Pictorial Information, SPIE v.66, 108 (1975)
SAMSUNG-1038	Reader, MPEG4: Coding for Content, Interactivity, and Universal Accessibility, Optical Engineering 35(1), 104 (January 1996)
SAMSUNG-1039	Reader, MPEG Patents, in MPEG Video Compression Standard, Chapter 16, at 357-362 (Mitchell et al ed.) (1996)
SAMSUNG-1040	Radha et al., The MPEG-4 Fine-Grained Scalable Video Coding Method for Multimedia Streaming Over IP, IEEE Transactions on Multimedia, v.3, 53 (March 2001)
SAMSUNG-1041	H.264 / MPEG-4 Part 10 White Paper, January 31, 2003 (downloaded from https://github.com/yistLin/H264-Encoder/blob/1cdaf090b63642932ed726b102ed2cf80908edbb/doc/H.264%20%3A%20MPEG-4%20Part%2010%20White%20Paper.pdf on Jan. 5, 2024)
SAMSUNG-1042	ISO/IEC 14496-2: 2004 (MPEG4)
SAMSUNG-1043	ISO/IEC 13818-2: 1996 (MPEG2)

I. Professional Background

A. Summary

4. I am a digital media consultant providing technical, business development and intellectual property consulting services in the areas of digital media including digital imaging, digital video, digital audio and digital speech. Applications include consumer audio and video transmission and storage; video, audio and speech compression; real-time video processing and display; digital speech processing; image/video/audio systems architecture; and image/video/audio chip architecture. I have held this position since 2001 and have consulted for over 80 clients.

B. Education

5. I received my Doctoral degree in 1974 from the University of Sussex, England. My thesis was titled "Orthogonal Transform Coding of Still and Moving Pictures." The research for my thesis was performed in residence at the Image Processing Institute, University of Southern California, Los Angeles.

6. I received my B. Eng. Degree with Honors in 1970 from the University of Liverpool, England, in the field of electronics.

C. Work Experience

7. From 1970 to 1973 I performed my graduate research in video compression. I was one of the first to perform a type of image coding (adaptive block transform coding) and the first to apply this type of coding to video. This is described in my thesis and summarized in an SPIE paper. SAMSUNG-1037. These techniques

underlie the audiovisual coding standards known as MPEG (Moving Picture Experts Group), H.26x, and virtually all other video compression schemes today.

8. From 1975 to 1981 I studied, designed and developed systems for military imaging systems including real-time image and video reconnaissance systems and battlefield management systems.

9. In the early 1980s I taught classes at Santa Clara University, California in digital signal processing and digital image processing.

10. From 1982 to 1989 I architected and led hardware and software engineering teams in the design of systems for real-time imaging for military, medical and earth resources applications. In 1983 I designed an image warping system that could perform perspective geometric warping of images in near-real-time. My team implemented the system in hardware on a single VME board under software control. Significant sales ensued over the next years with a pull-through effect on sales of the complete image processing system in which it was an option. This product design was published in a 1984 paper[1].

11. From 1990 to 2001 I architected and led hardware and software engineering teams in the design of semiconductor chips and systems for real-time

[1] Adams J, Patton C, Reader C, Zamora D, Hardware for Geometric Warping, Electronic Imaging, April 1984.

imaging in digital consumer audio/video applications, including videoconferencing (with speech coding), broadcast TV and DVD.

D. Standardization

12. In 1990 I became an accredited delegate to the Moving Picture Experts Group – MPEG. I, and my team contributed to the technical work for all three parts of the standard – Systems, Video and Audio – and I participated in the management of the MPEG committee.

13. I was Head of Delegation (HoD) to MPEG for the United States in 1991-1992, during which time the MPEG1 standard was completed and the MPEG2 standard was successfully positioned as the global standard for digital video broadcasting and recording (DVD). I was the Editor in Chief of the MPEG1 standard. I personally reviewed and edited all three parts of the standard in detail, and wrote much of the informative annex for the MPEG1 standard. I participated in the technical and management work for development of the MPEG2 standard.

14. I chaired the implementation subcommittee that analyzed MPEG1 Audio (Levels I & II aka MUSICAM; Level III aka mp3), Dolby AC3 and other proposed audio compression algorithms including legacy algorithms for complexity and cost of implementation.

15. I was a co-founder of the MPEG4 standard and chaired the subcommittee from inception for 2-1/2 years, beginning in 1993, following which I chaired the

MPEG4 Requirements subcommittee for a further 2 years. These subcommittees established many of the fundamental principles of the MPEG4 standard, including object-based coding, software-based implementation, and development of the bitstream as a syntactic language. *E.g.*, SAMSUNG-1038. MPEG4 focused on audiovisual low bitrate coding, including low bitrate speech coding.

16. The MPEG4 standard in ISO and the H.263 standard in ITU-T were developed collaboratively, with the H.263 Rapporteur and I synchronizing meetings and establishing profiles in each standard that are precisely compatible.

17. I was instrumental in establishing the work on Advanced Audio Coding (AAC).

18. I initiated the work in Synthetic-Natural Hybrid Coding (SNHC), and personally contributed to the work on compression of 3D graphics in the area of error resilient coding.

19. In the early 2000s, I was an invited expert to the Joint Video Team (JVT) established by ISO and ITU to develop the H.264 standard (also denoted MPEG4 Pt. 10, AVC). I was also invited to become an officer of the China National Standards committee AVS, in which I chair the Intellectual Property Rights Subgroup.

20. I have closely followed the developments of the H.265 and H.266 standards.

E. Intellectual Property Rights

21. In 1993 I was hired by CableLabs to be the technical expert for establishing the MPEG Patent Pool (Now MPEGLA). In the course of creating a list of essential IP to practice the standard, I reviewed approximately 10,000 abstracts and 1,000 patents. This is summarized in a chapter of the MPEG book by Mitchell et al. SAMSUNG-1039.

22. Multiple companies have hire me to assist in developing portfolios of their standards-essential patents.

23. In 2002 I was hired by 10 companies to evaluate the standards essential patent environment for the nascent H.264 standard.

24. In 2003 I was hired to evaluate the standards essential patent environment for the nascent national China AVS standards.

25. In 2013 I was hired to evaluate the standards essential patent environment for the nascent AV1 standard.

26. In 2017 I was hired to evaluate the standards essential patent environment for the H.265/HEVC standard.

27. I am the Co-Director of the China AVS Patent Pool Administration. I lead the negotiations for sub-licensing of the AVS standards. In 2022 I played a leading role in the adoption of the AVS3 video standard by DVB.

28. I have performed expert consulting and expert witness work for patent holders and defendants in patent licensing negotiations and litigation.

F. Curriculum Vitae

29. Additional information concerning my professional publications and presentations in the field of digital video and cases in which I have served as an expert are set forth in my current Curriculum Vitae, a copy of which is attached as Exhibit A. This Curriculum Vitae lists many publications authored or co-authored by me; and lists the cases in which I have testified via depositions and trials.

II. Digital Video Technologies

30. Below I describe the state of digital video coding as of the '995 Patent's earliest claimed priority date (May 30, 2008), and summarize the development of technologies underlying the features and methods recited in claims 2-4 and 11.

A. Analog Video

31. Like film, video comprises a rapid sequence of still images that the human vision system integrates into a perception of motion. The "moving images" are often called video frames and video pictures.

32. All-electronic television[2] was invented by Philo Farnsworth in the late 1920s. Farnsworth developed the technique of raster scanning images and produced

[2] Electro-mechanical television systems were also introduced.

cameras and CRTs (cathode ray tubes) that could synchronously acquire and reproduce moving images.

33. All-electronic television service was introduced by the BBC in England in November 1936. Broadcasting of television programs continued until interrupted by the Second World War. Television service began in the U.S. in July 1941. These services provided only black-and-white video until 1953, when the NTSC standard in the U.S. was revised to include color. Analog broadcasting continued in the U.S. for almost seventy years. Full-power analog television broadcasting ceased in 2009 under order from the FCC.

B. Digital Video

34. Digitization of analog signals in general was introduced in the late 1940s with the name "pulse code modulation" (PCM). Fundamental sampling theory showed that a bandwidth-limited analog signal could be sampled at twice the rate of the highest frequency in the band, and still be perfectly reconstructed from such samples. The sample amplitudes could be represented by the value of a number, *e.g.*, a decimal value or a binary value. In the case of image or video data, it has been widespread practice to represent this value by an unsigned 8-bit integer. Analog TV signals that scanned a video frame were digitized into two-dimensional arrays of digital picture elements, known as "pels" or "pixels." Digital video, like analog video (and film) comprises a rapid sequence of frames.

35. While a correctly bandpass filtered and sampled digital image, such as a video frame, theoretically includes spatial frequencies up to the Nyquist limit, in practice digital images contain spatial frequencies only up to a much lower level. There are many reasons, that may depend on the particular application. For example, the optical assembly that captured the image may limit the optical resolution of the data including lens materials and aberrations. Another example applies in situations where the imaging occurs in an outdoor environment in which atmospheric turbulence exists between an object being imaged and the image capture system – we may see this ourselves as the heat haze above a highway when driving in hot weather. Another example includes electronic noise in the image capture and processing system. Therefore, while the scene being imaged – the object space – may contain spatial frequencies up to a given level, a digital imaging system designed with a Nyquist frequency at that level will not in practice contain spatial frequencies as high as that. We may refer to such an image as blurred.

36. In this context, it is important to understand what is meant by the term "resolution". A distinction should be made between the resolution of the *information* in an image (such as a video frame) and the *data* representing the information in the image. The latter comprises the array of pixels, referred to above, and it is common in everyday speech and within the imaging/video community itself to refer to the number of pixels or the number of lines as the "resolution" of the image. As just explained, typical digital images do not contain spatial frequencies up to the theoretical limit given by the number

of pixels/lines. For example, many high-definition television (HDTV) receivers comprise a pixel array that vertically has 1080 lines. There are two principle broadcast formats – NBC, CBS and PBS broadcast in a "1080i" format (where the i denotes interlace-scan), while ABC and Fox broadcast in a "720p" format (where the p denotes progressive format). Both are presented on the HDTV in a 1080p format by processing the 1080i broadcasts to deinterlace the signals, and upsampling the 720p broadcasts to 1080 lines. But according to the Kell principle, the 1080i signal only contains about 700 lines of perceivable information and when either format is converted to 1080p format, neither of them has 1080 lines of "information" even though they both have 1080 lines of "resolution".

37. PCM was followed in 1952 by the invention at Bell Labs of differential pulse code modulation, (DPCM), which was immediately applied to video. Because the correlation between pixels in typical scenes was high, it was efficient to code the pixels by successively predicting each pixel from the preceding pixel or pixels. AT&T demonstrated its Picturephone in 1964 at the World's Fair. Subsequently, commercial Picturephone service was introduced in 1970, using DPCM coding.

38. Digital video was introduced in the professional television studio environment with the CCIR 601 standard that was developed in the early 1980s and published in 1982 (now known as the ITU-R BT.601 standard). The standard covered PCM data formats for the NTSC and PAL video standards and facilitated the

development of modern production and post-production studios, involving non-linear editing, digital switchers, and mixers, as well as digital special effects.

39. Digital video in its raw format is highly redundant. Each video frame comprises a regular, rectangular array of pixels. The density of the pixel array is chosen such as to portray the highest spatial resolution enabled by a particular video system. Historically, the earliest systems portrayed 400-500 lines of resolution. The so-called HDTV systems introduced in the 1990s doubled the number of lines to 1000 lines, and the recent so-called 4K systems double the number of lines again to 2000 lines. The imminent next generation of so-called 8K systems will further double the number of lines to 4000 lines, which will approximate the resolution of a 35mm film system.

40. Historically the frame rate was 30 frames per second, but one of the HDTV formats doubled this to 60 frames per second.

41. Transmission or storage of raw digital video data requires huge volumes of data and very fast data rates. Transmitting standard definition color TV with a format of 720x486 pixels and 30 frames/s would require over 250Mbits/s. HDTV would require approximately 5 times as much data and so-called 4K TV (UHDTV) at 60 frames/s would require approximately 40 times as much data.

42. Within a given scene being imaged by a video system, the content is very likely not to contain the highest level of detail except in a few, small areas. While a prescribed density of pixels may accurately describe such high detail areas, that density

of pixels is overkill for the rest of the scene to a greater or lesser degree. So the typical digital video frame is spatially redundant. For example, if the video scene contains the sky, or a uniformly painted wall, adjacent pixels will have almost identical intensity and color.

43. The frame rate of the video is established to smoothly portray the fastest motion the system is designed to support. But such motion may occur only a fraction of the time, and may occur only over a portion of a frame spatially. So the typical video sequence of frames is temporally redundant. For example, sportscasters sitting at a desk demonstrate little motion over only a portion of the scene, but when they cut away to basketball, the action is frenetic and may be scene-wide. In the former case the pixel values will be almost identical from one frame to the next over most of the frame.

C. Image Restoration; Superresolution

44. The field of image restoration is concerned with providing the maximum image quality possible within a pixel array of a given dimension. The raw image may be degraded by various aberrations and corrupted by noise, as discussed above. The fine details within the image – which in general correspond to the high frequency content of the image may not be visible to a viewer. Image restoration is the class of processing that reverses the aberrations and suppresses the noise, thus exposing the fine details.

45. Research in this field is over 50 years old, and comprises multiple approaches, involving linear and non-linear filtering, statistical methods and perceptual

models. Early work in this field is compiled in the book Digital Image Restoration, Prentice-Hall, 1977 by Andrews and Hunt. Approaches to the problem include mathematical modeling of the aberrations and applying the inverse of the model to correct for the aberrations, or statistical modeling of the noise and applying digital signal processing to filters out the noise.

46. One member of the class of image restoration techniques is superresolution. The term implies a process to create an output image having spatial resolution higher than the theoretical limit of the dimensions of the image pixel array of the input image. This is not possible and practically the term is used to provide enhanced spatial frequency content in two different ways. In the first way, the term refers to restoring the spatial frequency content of an image within the theoretical limits of the pixel array dimensions. This means that the information content of the superresolution processed image is higher than that of the input image, within the same pixel array dimensions. However, in the other way, the term is used to describe a process in which the processed image possesses a pixel array having larger dimensions than the input image. For example, the output superresolution image may have twice as many pixels horizontally and vertically (four times as many pixels in total).

47. Merely doubling the number of pixels horizontally and the number of pixels or lines vertically in the representation of an image does not increase the

resolution of the image[3]. Using superresolution processing to produce an output image that has double the pixels in each dimension may increase the information content of the image, i.e., the true resolution of the image and at the same time the output image has twice the "resolution" in pixels horizontally and vertically. But the two are not synonymous.

48. Improving the spatial frequency content of an image to provide "superresolution" when the raw image spatial frequencies are limited by factors such as physical phenomena in the image capture process may seem impossible. But if multiple images of the same scene (object space) are available, and these images are not aligned with each other by translational differences that are fractions of the dimensions of a single pixel, then the assembly of such images does contain higher spatial frequency content than any one member of the assembly. A very well-established superresolution method in the art is to register such multiple images using sub-pixel accuracy, and

[3] One can easily check this on one's own computer – zooming in (scaling up) an image that is initially being displayed with each pixel in the image corresponding to a pixel on the display will not cause the displayed image to become sharper, i.e., show more information, instead it will look blurry and eventually the individual pixels will become visible as square blocks on the screen.

filtering the registered image to output an image with higher spatial frequencies than any one of the input images.

49. Many[4] prior art publications describe this approach to superresolution, including admitted prior art in the '995 patent. See Super-Resolution Image Reconstruction, by Sung C. P. and Min K. P.: A Technical Overview, IEEE Signal Proc. Magazine, Vol. 26, No. 3, pp. 21-36, 2003, '995 22:47-50. The source of the multiple images of the same scene that are to be registered may be satellite images taken on multiple passes over the same location. This is described in a 1984 paper by Tsai: Tsai R Y, Huang T S, Multiframe image restoration and registration, Advances in Computer Vision and Image Processing, Vol. 1, T. S. Huang, ed., Jai Press, pp. 317-319, 1984. The '995 Patent, for example, refers to the Park prior art reference (SAMSUNG-1012) in discussing super-resolution enlargement. SAMSUNG-1001, 22:47-50. Park summarizes super-resolution processing as follows:

> "How can we obtain [a high-resolution (HR)] image from multiple [low-resolution (LR)] images? The basic premise for increasing the spatial resolution in [super-resolution (SR)] techniques is the availability of multiple LR images captured from the same scene … . In SR, typically, the LR images represent different 'looks' at the same scene. That is, LR images are subsampled (aliased) as well as shifted with subpixel precision. … If the LR images have different subpixel shifts from each other and if aliasing is present, … then

[4] The patent errs in misunderstanding the order of Asian surnames and given names. The surname is Park and the initials are C. P.

> … the new information contained in each LR image can be exploited to obtain an HR image."

SAMSUNG-1012, 2.

50. Park's FIG. 1, for example, illustrates how three low-resolution pictures of the same scene, captured individually by several still cameras or sequentially by a video camera, naturally contain pixels that are spatially offset from each other by amounts smaller than the size of individual pixels in the low-resolution grid (i.e., subpixel shifts):

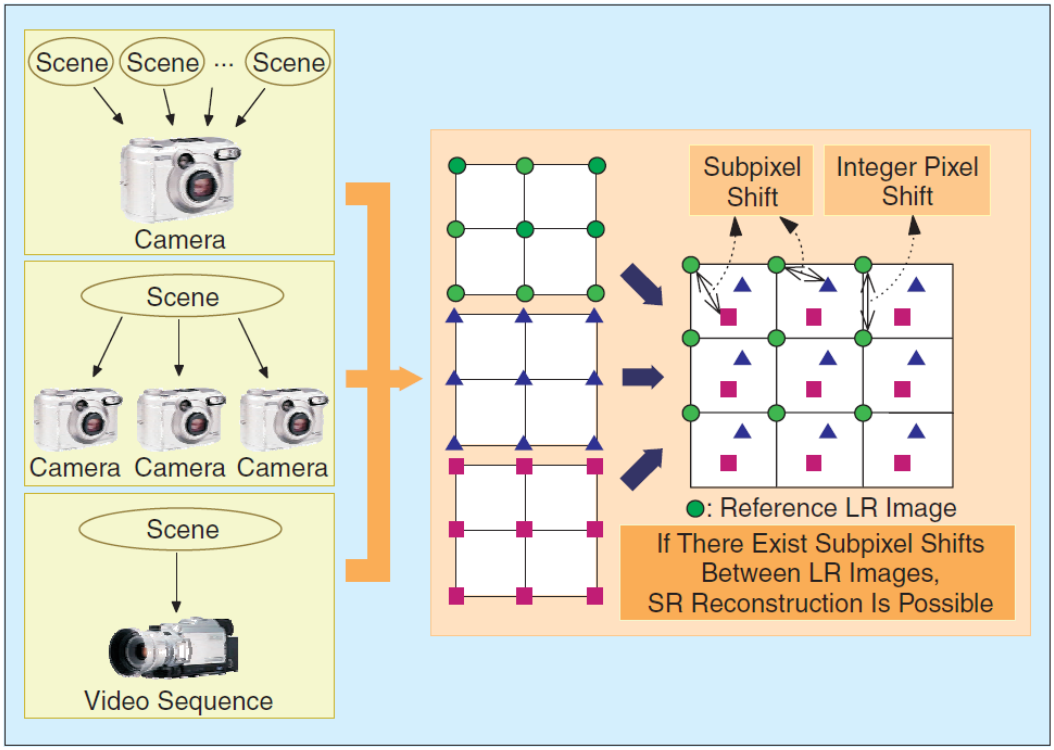

▲ *1. Basic premise for super resolution.*

SAMSUNG-1012, FIG. 1

51. According to Park, typical super-resolution processing involves registering pixel locations from several low-resolution pictures, mapping pixels from the low-resolution pictures to a high-resolution grid, interpolating any missing pixels in the high-resolution grid, and performing deblurring and denoising operations. SAMSUNG-1012, 5. Park's FIG. 7 illustrates these concepts:

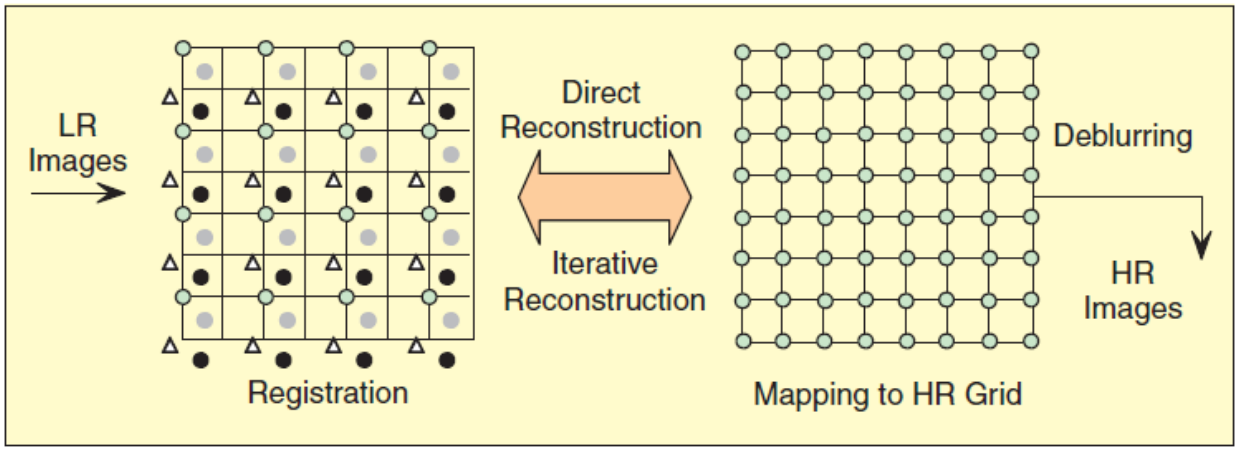

▲ *7. Registration-interpolation-based reconstruction.*

52. Another source is the frames of a video sequence. Video standards are designed to capture and display video images that are close in time so there is a limited amount of motion between each pair of images and the human vision system integrates the motion from one image to the next to create the illusion of continuous motion. Most conveniently, the sub-pixel registration of such frames is facilitated by the process of motion-compensated prediction used to code a sequence of such frames.

53. Techniques for reducing the spatial resolution of a super-resolution enlarged picture to maintain the enhanced quality of such a picture while supporting displays or other processes at a lower spatial resolution were well-established before the

'995 Patent. Park, for example, explains that "[a] related problem to [super-resolution (SR)] techniques is image restoration" where "the goal … is to recover a degraded (e.g., blurred, noisy) image, but it does not change the size of image." SAMSUNG-1012, 2. Martins further describes techniques for "decimating" super-resolution enlarged pictures in a video sequence to obtain "higher fidelity" video in a desired lower-resolution format.

54. FIG. 4(c) of the '995 Patent illustrates how superresolution increases the spatial frequency a picture from a lower frequency "fa" to a higher frequency "fb" (which is subsequently filtered to a desired frequency "f max"):

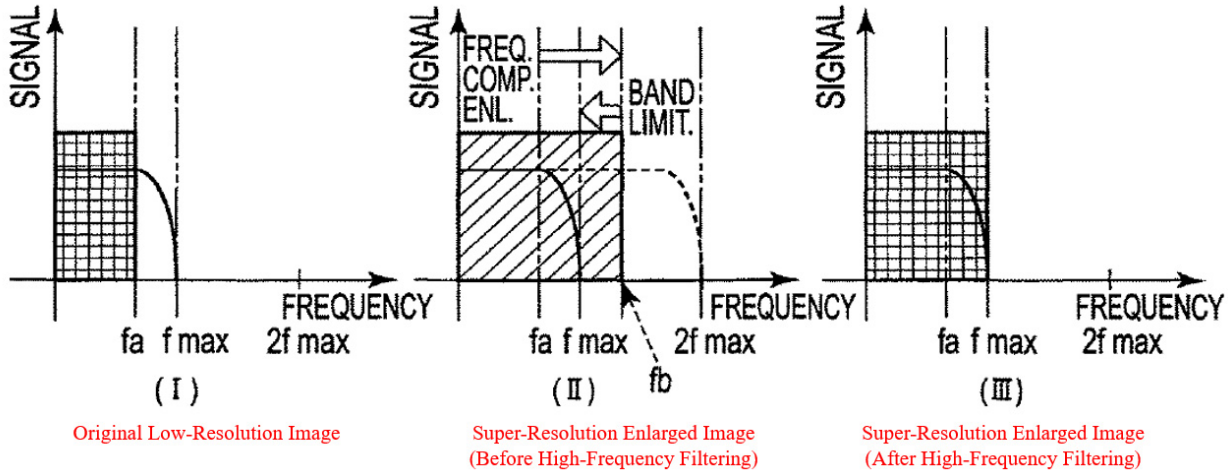

SAMSUNG-1001, FIG. 4(c) (annotated)

D. Image Warping

55. An image or video sequence may be captured of a scene and an application my require the view of the scene to be oriented differently. In the simplest case, the image must be translated in the plane of the imaging system by some number of pixels

horizontally and/or vertically. The translation may be needed with fractional pixel (sub-pixel) accuracy. Another case is one in which the scale of the captured image must be changed, i.e., it is desired to zoom in or zoom out on the image. A further case is rotating the image and beyond that more sophisticated warping operations may be needed such as perspective changes.

56. To implement image warping two operations are required. First the addresses of the output pixels must be calculated in input image coordinate space with fractional pixel (sub-pixel) accuracy. Then the output pixel values must be computed from the input pixel values by interpolation from the input pixels in the neighborhood of each output pixel based on the fractional pixel spacing.

57. In the image warper I designed 40 years ago, the address calculations were performed using a polynomial equation of the appropriate order. The interpolations could have been performed by first interpolating the entire input image to create values for sub-pixels at every sub-pixel location. That would have constituted an "enlargement" of the input image. Then the desired pixels for the output image could have been selected from the enlarged array using the computed output addresses in the input coordinate space. But that would have required computing and storing the enlarged image, which would have been larger by the square of the sub-pixel accuracy., while only a small fraction of the values would have been selected for the output image. Such an "enlargement" procedure would have been incredibly wasteful. Instead, for

each pixel in turn, the address of each output pixel was used to define a region of the input pixels matching the size of the interpolation kernel and the output pixel was interpolated from that region.

E. Video Coding

58. Video coding, also known as video compression, is the art of removing the spatial and temporal redundancy to enable storage or transmission of digital video data with vastly fewer bits, while preserving the quality of the raw video data to the maximum extent possible. Expressed another way, video coding is the art of representing the information in a video sequence with the least data (i.e., the fewest bits) and the highest reconstructed quality.

59. Video coding is not performed by a single algorithm, rather it comprises a set of video coding tools, each designed to tackle a particular aspect of reducing the redundancy of raw video data. Some video tools tackle the spatial redundancy, while other tools tackle the temporal redundancy. In each case, the tools attempt to identify and extract the visual information perceived by the human vision system. This information is then encoded into a video bitstream.

60. The fundamental research for video coding was performed in the 1960s and 1970s. By the end of the 1970s, a so-called hybrid architecture had been developed that remains today as the foundation for almost all video coding standards. Temporal redundancy is removed using block-based motion compensation. This is based on a

model of motion in which objects within a scene generally do not change, but rather move from one location in the scene to another. On a block basis, this model works well. The following figures I assembled illustrate the point:

- **Model: Motion consists of translation in the viewing plane.**

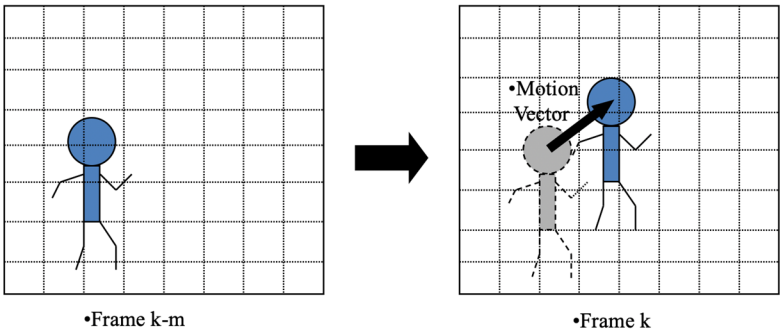

61. Thus for each block in a current frame, a search is made to find a best match to the block in a "reference" frame that has already been coded. The best-matched block is used as a prediction for the current block. The difference between the pixel values of the current block and the pixel values of the prediction block is called the residual data. The location of the best match block in the reference frame relative to the location of the current block is called a motion vector. The residual data block and the motion vector are coded, and typically comprise a small fraction of the amount of data needed to code the current block alone. The following figures I assembled illustrate the point:

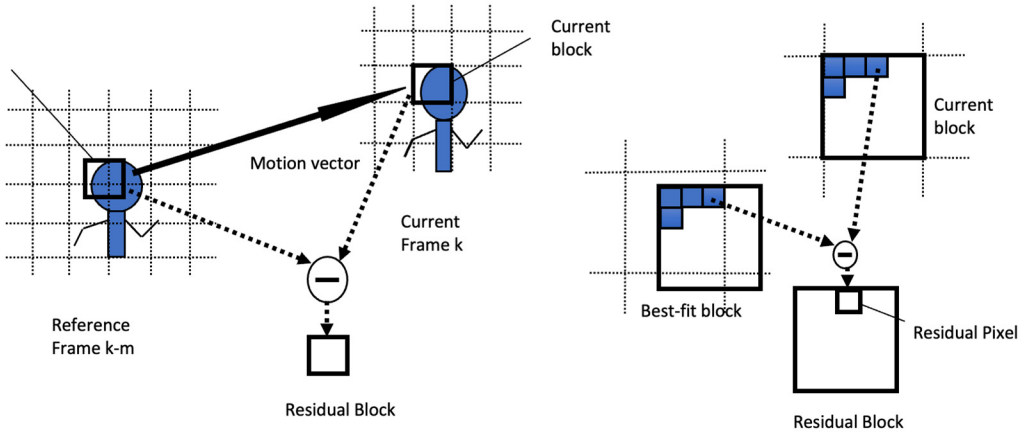

62. For blocks that cannot be temporally predicted efficiently, spatial prediction within the same frame is applied. In both cases the blocks of residual data may still contain spatial redundancy within the block. This redundancy is reduced using transform coding techniques.

63. The nature of video data is highly variable, both spatially and temporally. Some video sequences contain high levels of spatial detail. Such detail may span across the whole video frame or may be confined to local areas of the video frame. Some video sequences contain high degrees of movement that also may span across the whole video frame, such as when a camera is panning rapidly across a scene, or may be localized within the video frame. Video coding is performed in a highly adaptive way, by breaking each video frame into small blocks and adapting the spatial and temporal coding to the characteristics of the data on a local basis.

64. The temporal and spatial information is entropy coded to efficiently represent it and is then formatted into a bitstream.

65. The adaptive coding of video results in a highly variable instantaneous bitrate – it is obvious the volume of data produced when a ball is snapped in a football game is vastly higher than that produced during a time-out. As a result, the entropy coded bitstream at the encoder is buffered in order to smooth out at least some of the variation in data rate before transmission or storage and there is a corresponding buffer at the input to the decoder.

66. Video coding in particular has been characterized by the difficulty and cost involved in implementing coding algorithms for use in mass-market consumer applications. The volume of video data is very large, and the requirement for presenting video data that has been transmitted or retrieved from storage in real-time has been very challenging. As a consequence, while researchers in the field have conceived of sophisticated mathematical algorithms and procedures for video coding for decades, practical implementation has had to wait for semiconductor technology to pass certain thresholds.

F. Loop Filters

67. Many conventional video coding systems before the '995 Patent included "loop filters" that were designed to enhance reference pictures used in motion compensation. The following figure illustrates the concept of loop filtering in the context of "deblocking" or "deringing" filters that enhance reference pictures used for motion compensation:

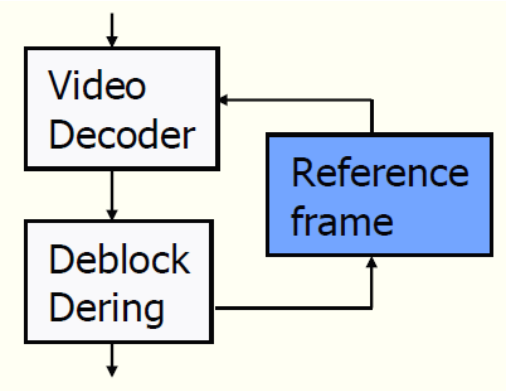

SAMSUNG-1023, Slide 34

68. As shown above, the "deblocking" or "deringing" loop filter enhances a decoded (reconstructed) picture from the video decoder before that picture is used as a reference for the prediction of pixels in other pictures of the video sequence. Bier, Slide 34

69. Deblocking and deringing filters are two common types of loop filters that reduce artifacts between adjacent blocks of a reference picture that have been predicted from disparate blocks in one or more reference frames or intra-predicted from other blocks in the same picture. The enhanced quality of a picture before deblocking filtering (left) and after deblocking filtering (right) is shown below, as an example:

SAMSUNG-1023, Slide 34

70. Deblocking and deringing filters were common but not the only type of loop filters known before the '995 Patent. Many types of loop filters were in fact known before the '995 Patent, each of which functions to enhance the quality of a reference picture in a coding loop. *See, e.g.*, SAMSUNG-1008, [0006]; SAMSUNG-1015, [0068]; SAMSUNG-1011, [0022]-[0023], FIGS. 2-5

71. While loop filters can improve decoding quality and compression, their benefits must also be weighed against the cost of additional processing load incurred by the filtering. *See, e.g.*, SAMSUNG-1023, Slides 34-35; SAMSUNG-1008; *infra*, §VI.D. For this reason, prior art video coding algorithms implemented selective loop filtering. Selective loop filtering allows the coder to decide whether to apply loop filtering to a reference picture based on factors that balance the marginal image quality improvement realized by the loop filter, the amount of additional compression realized by the loop filter, and the cost of loop filtering in terms of increased computational load and power consumption. *See, e.g.*, SAMSUNG-1008, [0005]-[0008], [0028].

G. Video Coding Standards

1. Background

72. Two international bodies are responsible for audiovisual standards – the ITU-T and ISO/IEC. Throughout the last three decades, these bodies have collaborated to develop generations of standards, most frequently publishing identical texts under their own standardization programs.

73. In general, the standardization process has followed the practice of beginning with a requirements gathering stage, leading to a call for proposals and evaluation stage, and then a development stage. In the development stage, the draft standard, and complementary reference software, are iterated from one meeting to the next.

74. Owing to the highly variable nature of video data, (and non-stationary statistics) the experts propose techniques to develop a particular coding tool and perform experiments using the reference software and selected test sequences to determine whether or not, and under what circumstances, a proposed technique improves the draft coding standard. Frequently, a technique brings improvement under specific, limited circumstances, so it is common practice for a tool to be switched on and off for local regions of the video sequence (spatially and/or temporally), or for parameters of a coding tool to be locally adjusted. In this sense, the development of a

standard and attendant adoption of coding tools is an ad hoc process based upon empirical evidence.

75. In the final standard, this appears in the syntax specification of the coded bitstream as a combination of flags and sections of optional syntax selected by the state of the flags; parameters that adjust/adapt video coding tools; and indices that specify selections among multiple choices. For example, for motion compensation of a video frame or blocks within a video frame, a selection may be made between prediction from one of a number of reference frames. The encoder determines which reference frame is optimal at any given point and signals the index of that reference frame to the decoder. There are no hard and fast rules for the selection – a reference frame that works best for one block in the current frame may not be the best choice for the next block.

76. The structure of standards for audiovisual coding has comprised an audio/speech coding part, video coding part, and a "systems" part. The audio/speech and video parts establish standards normatively specifying precise formats for coded bitstreams dedicated exclusively to audio/speech and video respectively. These may be called elementary bitstreams. For audiovisual applications such as broadcast television, these elementary bitstreams are combined into a single bitstream by the system part.

2. The MPEG1 Standards

77. The MPEG committee established requirements for the MPEG1 standard and called for proposals in 1989. Many of the resulting proposals were based on the preceding work for the H.261 videoconferencing standard, indeed, MPEG1 may be viewed as an extension of that standard. But for MPEG1, the requirements were focused on a digital replacement for the analog VCR, and included trick play modes such fast-forward, fast rewind and reverse play. Multiple responses to the call proposed groups of pictures as a mechanism to meet these requirements. During the ensuing development of the standard, the Group Of Pictures (GOP) data structure was defined.

> 2.1.71 group of pictures [video]: A series of one or more coded pictures intended to assist random access. The group of pictures is one of the layers in the coding syntax defined in this part of ISO/IEC 11172.

SAMSUNG-1034, 6.

78. The group of pictures must contain an I-picture, may contain P-pictures and B-pictures and can be any length greater than or equal to one I-picture. SAMSUNG-1034, 15-16. In MPEG1, the coding order and display order of the pictures of the GOP can be different from each other. *Id.*

79. The MPEG1 standard introduced a highly efficient method of temporal coding called bi-directional prediction. This was subsequently adopted by the MPEG2 standard. In this method, multiple video frames are buffered prior to encoding and the coded data for multiple frames are buffered before decoding. Temporal coding is used first to predict and code the blocks in a future frame that typically may be two or three

frames ahead in the sequence of buffered frames. This is called a "P-frame." Then the blocks in an intervening frame are coded by searching for matching blocks in a previous frame and a future frame. This is called a "B-frame." The corresponding pixel values in the best match blocks are averaged and the averaged block is used to predict the block in the intervening frame. The resultant residual block and the two corresponding motion vectors are coded.

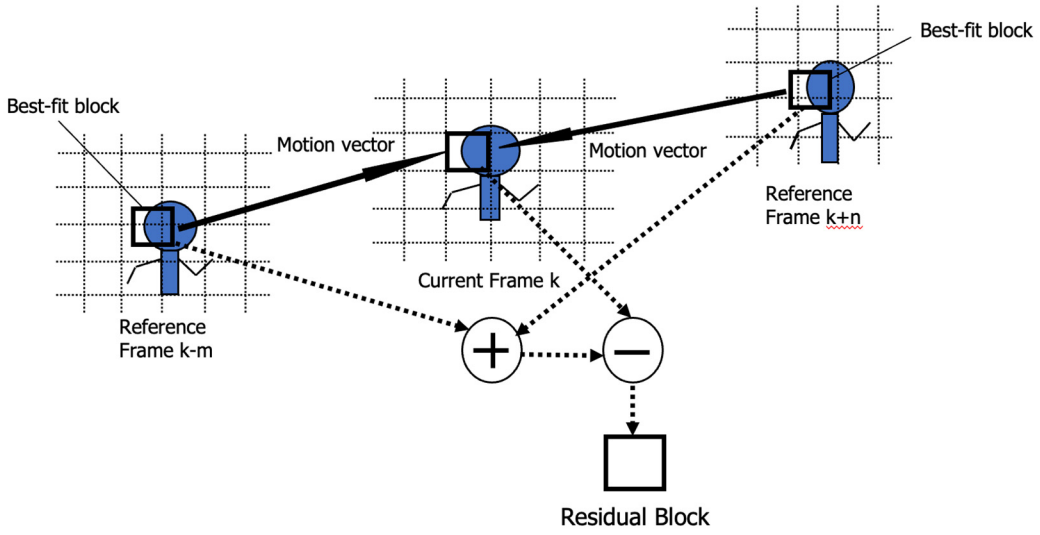

80. The prediction of P-frames by successive forward prediction and B-frames by prediction from adjacent I-frames and P-frames is illustrated in Figure D.2 of the MPEG1 Standard, shown below. It can be seen that intra-coded frame I2 is not predicted from another frame; P-frames P5, P8 and P11 are forward-predicted from I-frames or other P-frames, and pairs of frames I2, P5, P8 and P11 are used to predict the corresponding interstitial B-frames.

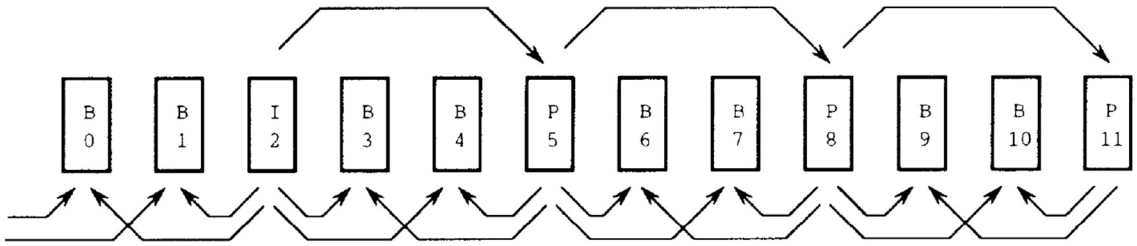

Figure D.2 -- Dependency relationship between I, B, and P-pictures

Figure D.2 illustrates a number of pictures in display order. The arrows show the dependency relationship of the predictive and bidirectionally predictive coded pictures.

SAMSUNG-1034, 54.

3. The MPEG2 Standard

81. The MPEG committee established requirements for the MPEG2 standard and called for proposals in 1991. The requirements were focused first on digital television broadcasting and recording of standard definition video (*e.g.*, NTSC, PAL) at full resolution. As such, MPEG2 comprises an extension of MPEG1 to include coding of interlaced video. The MPEG2 standard also includes optional coding tools for scalable video coding. *E.g.*, SAMSUNG-1043; SAMSUNG-1035.

82. The MPEG2 standard, officially ISO/IEC 13818-2 was technically completed in 1994, and rapidly became massively successful in the global marketplace as the standard for digital television broadcasting and digital video recording – DVD. *E.g.*, SAMSUNG-1043, SAMSUNG-1035.

4. MPEG Scalability

83. In the context of video coding, scalability is a functionality in which a single coded bitstream comprises a hierarchical set of sub-streams representing the

video data. The bitstream is hierarchical because a base layer is coded at a given reproducible (decoded, reconstructed) quality level, and also used to predict a layer that is coded at a higher reproducible (decoded, reconstructed) quality level. This process may be iteratively continued to predict further higher quality layers.

84. The complete set represents the video data at the highest quality for reproduction and the highest bitrate for storage and transmission. Subsets of the streams may be stored and transmitted at lower bitrates, leading to lower reproduced quality.

85. A subset may represent the video content at a lower quality, or at a lower spatial resolution, or a subset may represent the video content at a lower temporal resolution, i.e., a lower frame rate.

86. Efficient coding of scalable bitstreams may be provided by coding a "base layer" at a relatively low bitrate with video frames having relatively low quality, spatial resolution, or temporal resolution, then using those frames to predict one or more "enhancement layers" having contemporaneous frames with higher quality, higher spatial resolution, or additional frames to provide higher temporal resolution. The concept is the enhancement layer frames are highly correlated with the base layer frames, so coding only the difference between them requires few bits.

87. In the MPEG standards, B-frames inherently support temporal scalability because they are not used to predict other frames. Examples of practical applications

for such temporal scalability include a heterogeneous network in which a node on a broadband network interfaces to a narrow band network, at which a full resolution, full bandwidth video bitstream may be forwarded by stripping out the bits used to code the B-frames. Another example is a mobile receiver having limited computational power, that decodes and presents only the I-frames and P-frames.

88. The MPEG2 standard supports three types of scalability – SNR scalability (i.e. quality scalability), spatial scalability and temporal scalability. SAMSUNG-1035, 146. Section D.7.1.2 describes these video coding tools. The SNR scalability is summarized as : "The aim of SNR scalability is primarily to provide a mechanism for transmission of a two layer service, these two layers providing the same picture resolution but different quality level." In brief, section F.7.1.2.1 explains how SNR scalability functions in the following way (emphasis added):

> In the lower layer, the encoding is similar to the non scalable situation in terms of decisions, adaptive quantization, buffer regulation. The intra or error prediction macroblocks are DCT transformed. The coefficients are then quantized using a first rather coarse quantizer. The quantized coefficients are then VLC coded and sent together with the required side information (macroblock_type, motion vectors, coded_block_pattern()).
>
> In parallel, the quantized DCT coefficients coming from the lower layer, are de-quantized. The residual error between the coefficients and the de-quantized coefficients is then re-quantized, using a second finer quantizer. The resulting refinement coefficients are VLC coded and form the additional enhancement layer, together with a marginal amount of side information (quantiser_scale_code, coded_block_pattern() …).

SAMSUNG-1035, 146.

89. The spatial scalability in MPEG2 is implemented by a variant of the SNR scalability in which the video may be decoded as a 2:1 reduced resolution.

90. Temporal scalability in MPEG2 is illustrated in the figure below and summarized in section D.7.4 as follows:

> A two layer temporally scalable coding structure consisting of a base and an enhancement layer is shown in Figure F.1. Consider video input at full temporal rate to temporal demultiplexer; in our example it is temporally demultiplexed to form two video sequences, one input to the base layer encoder and the other input to the enhancement layer encoder. The base layer encoder is a non-hierarchical encoder operating at half temporal rate, the enhancement layer encoder is like a MAIN profile encoder and also operates at half temporal rate except that it uses base layer decoded pictures for motion compensated prediction. The encoded bitstreams of base and enhancement layers are multiplexed as a single stream in the systems multiplexer. The systems demultiplexer extracts two bitstreams and inputs corresponding bitstreams to base and enhancement layer decoders. The output of the base layer decoder can be shown standalone at half temporal rate or after multiplexing with enhancement layer decoded frames and shown at full temporal rate.

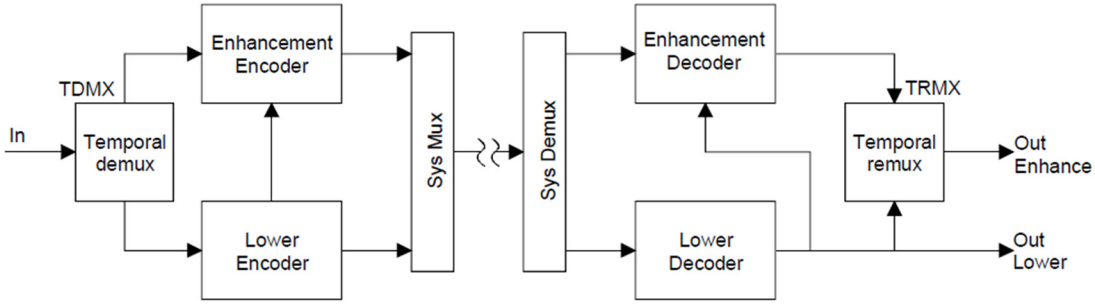

Figure D.1 – A two-layer codec structure for temporal scalability

SAMSUNG-1035, 147.

91. The MPEG4 Part 2 Visual standard includes fine grain scalability "FGS." A comprehensive overview can be found in Radha et al, SAMSUNG-1040, which is incorporated by reference in this declaration in full. In brief, this comprises the following:

> In order to meet the requirements outlined in the previous section, FGS encoding is designed to cover any desired bandwidth range while maintaining a very simple scalability structure. … the FGS structure consists of only two layers: a base-layer coded at a bitrate and a single enhancement-layer coded using a fine-granular (or embedded) scheme to a maximum bitrate of R_e. This structure provides a very efficient, yet simple, level of abstraction between the encoding and streaming processes. The encoder only needs to know the range of bandwidth [$R_{min} - R_b$, $R_{max} = R_e$] over which it has to code the content, and it does not need to be aware of the particular bitrate the content will be streamed at. The streaming server on the other hand has a total flexibility in sending any desired portion of any enhancement layer frame (in parallel with the corresponding base layer picture), without the need for performing complicated real-time rate control algorithms. This enables the server to handle a very large number of unicast streaming sessions and to adapt to their bandwidth variations in real-time. On the receiver side, the FGS framework adds a small amount of complexity and memory requirements to any standard motion- compensation based video decoder.
>
> …
>
> . . . the FGS framework requires two encoders, one for the base-layer and the other for the enhancement layer. The base-layer can be compressed using any motion-compensation video encoding method. Naturally, the DCT-based MPEG-4 video standard is a good candidate for the base-layer encoder due to its coding efficiency especially at low bitrates.
>
> Using the DCT transform at both the base and enhancement layers enables the encoder to perform a simple residual computation of the FGS

enhancement-layer. Each DCT FGS-residual frame consists of N_{BP} bitplanes:

$$N_{BP} = \lfloor \log_2 (|C|_{\max}) \rfloor + 1$$

Where $|C|_{max}$ is the maximum DCT (magnitude) value of the residual frame under consideration.3 After identifying $|C|_{max}$ and the corresponding N_{BP}, the FGS enhancement-layer encoder scans the residual signal using the traditional zig-zag scanning method starting from the most significant bitplane BP(1) and ending at the least significant bitplane BP(N_{BP}). Every bitplane consists of nonoverlapping macroblocks (MB's), and each MB includes four luminance ( ) blocks and two chroma blocks (and). Run-length codes are used for (lossless) entropy-coding of the zeros and ones in each bitplane block. This process generates variable length codes that constitute the FGS compressed bitstream. A special "all-zero blocks" code is used when all six bitplane-blocks (within a given bitplane-macroblock) do not have any bits with a value of one. At the receiver side, the FGS bitstream is first decoded by a variable length decoder (VLD). Due to the embedded nature of the FGS stream, the VLD re-generates the DCT residual bitplanes starting from the most significant bitplane toward the least significant one. Moreover, due to the type of scanning used by the FGS encoder, it is possible that the decoder does not receive all of the bitplane-blocks that belong to a particular bitplane. Any bitplane block not received by the decoder can be filled with zero values. The resulting DCT residual is then inverse-transformed to generate the SNR residual pixels. These residual pixels are then added to the base-layer decoder output to generate the final enhanced scalable video.

Radha et al., SAMSUNG-1040.

H. The H.263 Standard

92. H.263 is a standard developed by ITU-T for videoconferencing applications. The work commenced in 1993, leading to three versions of the standard in 1996, 1998 and 2001. The first version is an evolution of the earlier H.261 standard. The second version, which is incorporated by reference in this declaration in full, included a number of optional annexes that are relevant to the current matter. See, *e.g.*, SAMSUNG-1036.

93. For example, SAMSUNG-1036, Annex O Specifies three scalability modes, similar to MPEG2: SNR, spatial and temporal. In brief, section O.1.1 discloses temporal scalability as follows:

> Temporal scalability is achieved using bidirectionally predicted pictures, or B-pictures. B-pictures allow prediction from either or both a previous and subsequent reconstructed picture in the reference layer. This property generally results in improved compression efficiency as compared to that of P-pictures. B-pictures (and the B-part of PB- or Improved PB-frames) are not used as reference pictures for the prediction of any other pictures. This property allows for B-pictures to be discarded if necessary without adversely affecting any subsequent pictures, thus providing temporal scalability. Figure O.1 illustrates the predictive structure of P- and B-pictures.

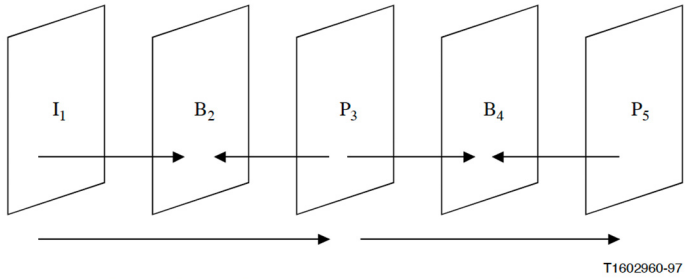

Figure O.1/H.263 – Illustration of B-picture prediction dependencies

SAMSUNG-1036, 102-103.

94. SNR scalability is disclosed in section O.1.2 as follows:

> The other basic method to achieve scalability is through spatial/SNR enhancement. Spatial scalability and SNR scalability are equivalent except for the use of interpolation as is described shortly. Because compression introduces artifacts and distortions, the difference between a reconstructed picture and its original in the encoder is (nearly always) a nonzero-valued picture, containing what can be called the coding error. Normally, this coding error is lost at the encoder and never recovered. With SNR scalability, these coding error pictures can also be encoded and sent to the decoder, producing an enhancement to the decoded picture. The extra data serves to increase the signal-to-noise ratio of the video picture, and hence, the term SNR scalability. Figure O.2 illustrates the data flow for SNR scalability. The vertical arrows from the lower layer illustrate that the picture in the enhancement layer is predicted from a reconstructed approximation of that picture in the reference (lower) layer. If prediction is only formed from the lower layer, then the enhancement layer picture is referred to as an EI-picture. It is possible, however, to create a modified bidirectionally predicted picture using both a prior enhancement layer picture and a temporally simultaneous lower layer reference picture. This type of picture is referred to as an EP-picture or "Enhancement" P-picture. The prediction flow for EI- and EP-pictures is shown in Figure O.2. (Although not specifically shown in Figure O.2, an EI-picture in an enhancement layer may have a P-picture as its lower layer reference picture, and an EP-picture may have an I-picture as its lower-layer enhancement picture.) For both EI- and EP-pictures, the prediction from the reference layer uses no motion vectors. However, as with normal P-pictures, EP-pictures use motion vectors when predicting from their temporally prior reference picture in the same layer.

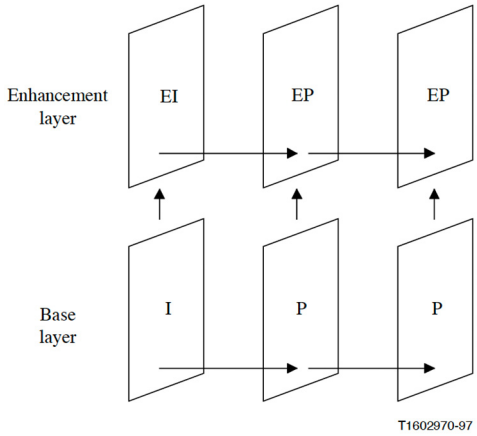

Figure O.2/H.263 – Illustration of SNR scalability

SAMSUNG-1036, 103-104.

95. Spatial scalability is disclosed in section O.1.3 as follows:

> The third and final scalability method in the Temporal, SNR, and Spatial Scalability mode is spatial scalability, which is closely related to SNR scalability. The only difference is that before the picture in the reference layer is used to predict the picture in the spatial enhancement layer, it is interpolated by a factor of two either horizontally or vertically (1-D spatial scalability), or both horizontally and vertically (2-D spatial scalability).
>
> Other than requiring an upsampling process to increase the size of the reference layer picture prior to its use as a reference for the encoding process, the processing and syntax for a spatial scalability picture is functionally identical to that for an SNR scalability picture. Since there is very little syntactical distinction between pictures using SNR scalability and pictures using spatial scalability, the pictures used for either purpose are called EI- and EP-pictures. The picture in the base layer which is used for upward prediction in an EI- or EP-picture may be an I-picture, a P-picture, or the P-part of a PB- or Improved PB-frame (but shall not be a B-picture or the B-part of a PB- or Improved PB-frame).

SAMSUNG-1036, 104-105.

96. Spatial scalability is also provided by two other Annexes. Annex P specifies a Reference Picture Resampling, while Annex Q specifies a Reduced Resolution Update. Annex P Section P.1 Introduction of SAMSUNG-1036 explains:

> This annex describes the use and syntax of a resampling process which can be applied to the previous decoded reference picture in order to generate a "warped" picture for use in predicting the current picture. This resampling syntax can specify the relationship of the current picture to a prior picture having a different source format, and can also specify a "global motion" warping alteration of the shape, size, and location of the prior picture with respect to the current picture. In particular, the Reference Picture Resampling mode can be used to adaptively alter the resolution of pictures during encoding.

SAMSUNG-1036, 116.

97. Section P.5 Factor-of-4 Resampling further specifies:

> Factor-of-4 resampling, which converts both the horizontal and vertical size of the picture by a factor of 2 or 1 2 , is a special case of the resampling algorithm described in P.3. The simplified description of the resampling algorithm for this special case is provided in this subclause.

SAMSUNG-1036, 126.

98. Annex Q Section Q.1 Introduction explains:

> This annex describes an optional Reduced-Resolution Update mode of this Recommendation. The capability of this mode is signaled by external means (for example, Recommendation H.245). The use of this mode is indicated in the PLUSPTYPE field of the picture header. The Reduced-Resolution Update mode is expected to be used when encoding a highly active scene, and provides the opportunity to increase the coding picture rate while maintaining sufficient subjective quality. This mode allows the encoder to send update information for a picture that is encoded at a reduced

> resolution, while preserving the detail in a higher resolution reference image to create a final image at the higher resolution.

SAMSUNG-1036, 129.

99. All of these Annexes can be used in conjunction with Annex N, which specifies the use of multiple reference pictures and the capability to recover from a transmission error by transmitting a new reference picture (or portion of a new reference picture) when the decoder receives a corrupted picture. Section N.2 provides an introduction:

> The source coder of this mode is shown in generalized form in Figure N.1. This figure shows a structure which uses a number of picture memories. The source coder may select one of the picture memories to suppress the temporal error propagation due to the inter-frame coding. The information to signal which picture is selected for prediction is included in the encoded bitstream.

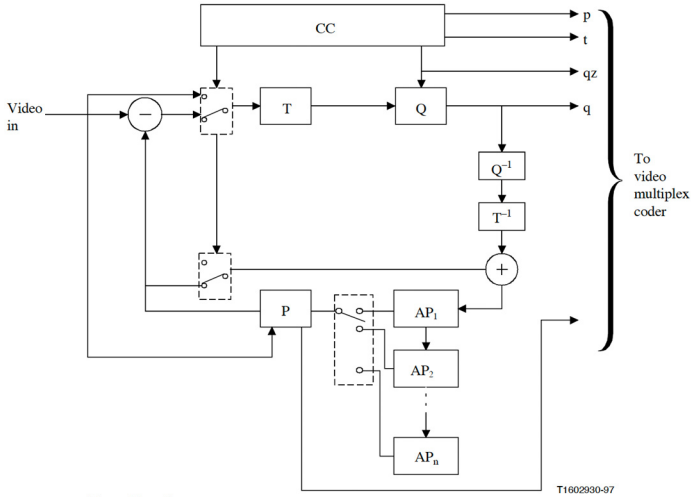

T	Transform
Q	Quantizer
P	Picture Memory with motion compensated variable delay
AP	Additional Picture Memory
CC	Coding control
p	Flag for INTRA/INTER
t	Flag for transmitted or not
qz	Quantizer indication
q	Quantizing index for transform coefficients
v	Motion vector

Figure N.1/H.263 – Source coder for NEWPRED

SAMSUNG-1036, 97.

100. Upon detecting an error in a received picture, the decoder may use a backchannel to signal the encoder to send a new picture. The encoder may choose to send an I-picture, so the decoder can reinitialize its temporal prediction of pictures and recover from the error propagation. Because I-pictures require a significant number of transmitted bits, the encoder may combine Annex N with any of the mechanisms in Annexes O, P, and Q to transmit the I-picture at 2:1 reduced resolution. (Transmitting a full-resolution I-picture may require 5-10 times as many bits as a P-picture meaning it could take 5-10 picture display periods. The encoder and decoder rate buffers are sized to manage the variable rate at which pictures are transmitted.)

101. The new reference picture is signaled using its temporal reference. In the normal mode of operation, the most recent temporally previous picture is used as the reference picture. Section N.4.1 specifies a flag Temporal Reference for Prediction Indicator (TRPI), which when set causes a Temporal Reference for Prediction (TRP) to be transmitted. Section N.4.1.4 specifies:

> When present (as indicated in TRPI), TRP indicates the Temporal Reference which is used for prediction of the encoding, except in the case of B-pictures and the B-picture part of an Improved PB-frame. For B-pictures or the B-picture part of an Improved PB-frame, the picture having the temporal reference TRP is used for the prediction in the forward direction. (Prediction in the reverse temporal direction always uses the immediately temporally subsequent picture.) TRP is a ten-bit number. If a custom picture clock frequency was not in use for the reference picture, the two MSBs of TRP are zero and the LSBs contain the eight-bit TR found

> in the picture header of the reference picture. If a custom picture clock frequency was in use for the reference picture, TRP is a ten-bit number consisting of the concatenation of ETR and TR from the reference picture header. When TRP is not present, the most recent temporally previous anchor picture shall be used for prediction, as when not in the Reference Picture Selection mode. TRP is valid until the next PSC, GSC, or SSC.

SAMSUNG-1036, 99.

I. The H.264 Standard

102. H.264 is a standard jointly developed by ITU-T for videoconferencing applications and ISO for consumer video applications. (The ISO designation is 14496-10, i.e., MPEG4 Part 10 also known as AVC – Advanced Video Codec, SAMSUNG-1042.) The work commenced in 1998 in the ITU-T workgroup VCEG (Video Coding Experts Group), with MPEG joining in December 2001 to form the Joint Video Team – JVT. The first version was published in May 2003. Scalable Video Coding (SVC) was included from version 3 in November 2007 (ITU-T Rec. H.264 (11/2007), SAMSUNG-1032, which is incorporated by reference in this declaration in full.

103. H.264/AVC provides a significant improvement in video coding performance over MPEG2 and is still the most widely used video coding standard worldwide. Notably it is used for High Definition Television broadcasting (HDTV).

104. For example, Schwarz IEEE paper "Overview of the scalable video coding extension of the H. 264 AVC standard" by three of the principle contributors to the H.264 scalability specification, SAMSUNG-1010, which is incorporated by

reference in this declaration in full, provides a thorough overview of the practical applications facilitated by the H.264 improvements.

105. Like the earlier standards, H.264/AVC supports the three types of scalability – temporal, spatial and quality (SNR).

106. Temporal scalability may be implemented using hierarchical B-Pictures. In H.264/AVC B-pictures can be used as reference pictures. Figure 1 of the paper illustrates different modes:

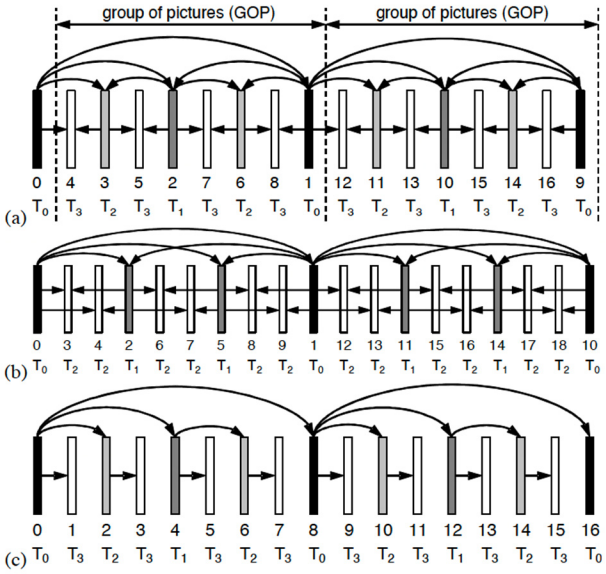

Fig. 1. Hierarchical prediction structures for enabling temporal scalability: (a) coding with hierarchical B pictures, (b) non-dyadic hierarchical prediction structure, (c) hierarchical prediction structure with a structural encoder/decoder delay of zero. The numbers directly below the pictures specify the coding order, the symbols T_k specify the temporal layers with k representing the corresponding temporal layer identifier.

SAMSUNG-1010, FIG. 1.

107. Note the pictures are arranged as GOPs in which base-layer pictures demarcate the GOP boundaries.

Temporal scalability with dyadic temporal enhancement layers can be very efficiently provided with the concept of hierarchical B pictures [28][29] as illustrated in Fig. 1a2. The enhancement layer pictures are typically coded as B pictures, where the reference picture lists 0 and 1 are restricted to the temporally preceding and succeeding picture, respectively, with a temporal layer identifier less than the temporal layer identifier of the predicted picture. Each set of temporal layers {T0,…,Tk} can be decoded independently of all layers with a temporal layer identifier T > k. In the following, the set of pictures between two successive pictures of the temporal base layer together with the succeeding base layer picture is referred to as a group of pictures (GOP). Although the described prediction structure with hierarchical B pictures provides temporal scalability and also shows excellent coding efficiency as will be demonstrated later, it represents a special case. In general, hierarchical prediction structures for enabling temporal scalability can always be combined with the multiple reference picture concept of H.264/AVC. This means that the reference picture lists can be constructed by using more than one reference picture, and they can also include pictures with the same temporal level as the picture to be predicted. Furthermore, hierarchical prediction structures are not restricted to the dyadic case. As an example, Fig. 1b illustrates a non-dyadic hierarchical prediction structure, which provides 2 independently decodable sub-sequences with 1/9-th and 1/3-rd of the full frame rate. It should further be noted that it is possible to arbitrarily modify the prediction structure of the temporal base layer, *e.g.*, in order to increase the coding efficiency. The chosen temporal prediction structure does not need to be constant over time. Note that it is possible to arbitrarily adjust the structural delay between encoding and decoding a picture by restricting motion-compensated prediction from pictures that follow the picture to be predicted in display order. As an example, Fig. 1c shows a hierarchical prediction structure, which does not employ motion-compensated prediction from pictures in the future. Although this structure provides the same degree of temporal scalability as the prediction structure of Fig. 1a, its structural delay is equal to zero compared to 7 pictures for the prediction structure in Fig. 1a. However, such low-delay structures typically decrease coding efficiency.

SAMSUNG-1010.

108. Spatial scalability in H.264/AVC is an enhanced version of the spatial scalability in the earlier standards. It is illustrated in Figure 4, which includes a combination with temporal scalability:

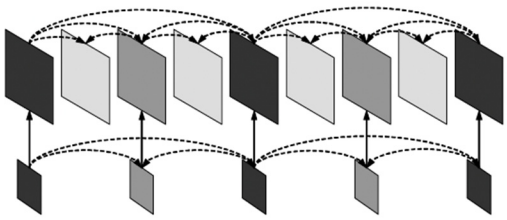

Fig. 4. Multi-layer structure with additional inter-layer prediction for enabling spatial scalable coding.

> For supporting spatial scalable coding, SVC follows the conventional approach of multi-layer coding, which is also used in H.262 | MPEG-2 Video, H.263, and MPEG-4 Visual. Each layer corresponds to a supported spatial resolution and is referred to by a spatial layer or dependency identifier D. The dependency identifier D for the base layer is equal to 0, and it is increased by 1 from one spatial layer to the next. In each spatial layer, motion-compensated prediction and intra prediction are employed as for single-layer coding. But in order to improve coding efficiency in comparison to simulcasting different spatial resolutions, additional so-called inter-layer prediction mechanisms are incorporated as illustrated in Fig. 4.
>
> In order to restrict the memory requirements and decoder complexity, SVC specifies that the same coding order is used for all supported spatial layers. The representations with different spatial resolutions for a given time instant form an access unit and have to be transmitted successively in increasing order of their corresponding spatial layer identifiers D. But as illustrated in Fig. 4, lower layer pictures do not need to be present in all access units, which makes it possible to combine temporal and spatial scalability.

SAMSUNG-1010.

109. Quality scalability in the H.264/AVC standard is provided in several modes, one of which is called coarse grain scalability – CGS. The paper explains:

> Quality scalability can be considered as a special case of spatial scalability with identical picture sizes for base and enhancement layer. As already mentioned in sec. V.B, this case is supported by the general concept for spatial scalable coding and it is also referred to as coarse-grain quality scalable coding (CGS). The same inter-layer prediction mechanisms as for spatial scalable coding are employed, but without using the corresponding upsampling operations and the inter-layer deblocking for intra-coded reference layer macroblocks. Furthermore, the inter-layer intra and residual prediction are directly performed in the transform domain. When utilizing inter- layer prediction for coarse-grain quality scalability in SVC, a refinement of texture information is typically achieved by requantizing the residual texture signal in the enhancement layer with a smaller quantization step size relative to that used for the preceding CGS layer.

SAMSUNG-1010.

110. The quality scalable modes deployed by the legacy standards and H.264/AVC are illustrated in Figure 8:

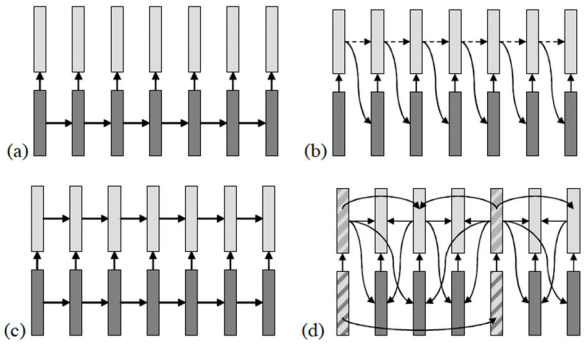

Fig. 8. Various concepts for trading off enhancement layer coding efficiency and drift for packet-based quality scalable coding: (a) base layer only control, (b) enhancement layer only control, (c) two-loop control, (d) key picture concept of SVC for hierarchical prediction structures, where key pictures are marked by the hatched boxes.

SAMSUNG-1010.

111. Schwarz explains the differences in detail, but in brief, the issues include drift in the feedback loop of the decoder, under transmission error conditions, and the cost of providing error resilience in terms of coding efficiency.

112. H.264 includes an optional tool for switching efficiently between contemporaneous coded streams. For example, two streams may comprise the same content with sequences of the pictures coded at different bitrates, and the functionality is desired to switch from one bitrate to the other bitrate seamlessly. While that could be accomplished with periodic I-pictures, such pictures would require a significant number of coded bits and attendant loss of coding efficiency. H.264 provides a tool at the Slice level called SP Slices, in which the slices are predictively coded with fewer bits in such a way that either stream my continue error-free decoding from the SP Slice. Of course, such a Slice may cover the entire Picture if desired. This tool is disclosed in a white paper - H.264 / MPEG-4 Part 10 : SP and SI slices (SAMSUNG-1041). In brief:

> 2. SP and SI slices
> SP and SI slices are specially-coded slices that enable (among other things) efficient switching between video streams and efficient random access for video decoders. A common requirement is for a video decoder to switch between one of several encoded streams. For example, the same video material is coded at multiple bitrates for transmission across the Internet; a decoder attempts to decode the highest-bitrate stream it can receive but may require to switch automatically to a lower-bitrate stream if the data throughput drops.
>
> Example: A decoder is decoding Stream A and wants to switch to decoding Stream B (Figure 2-1). For simplicity, assume that each frame is encoded as a single slice and predicted from one reference

(the previous decoded frame). After decoding P-slices A0 and A1, the decoder wants to switch to Stream B and decode B2, B3 and so on. If all the slices in Stream B are coded as P-slices, then the decoder will not have the correct decoded reference frame(s) required to reconstruct B2 (since B2 is predicted from the decoded frame B1 which does not exist in stream A). One solution is to code frame B2 as an I-slice. Because it is coded without prediction from any other frame, it can be decoded independently of preceding frames in stream B. The decoder can therefore switch between stream A and stream B as shown in Figure 2-1. Switching can be accomplished by inserting an I-slice at regular intervals in the coded sequence to create "switching points". However, an I-slice is likely to contain much more coded data than a P-slice and the result is a peak in the coded bitrate at each switching point.

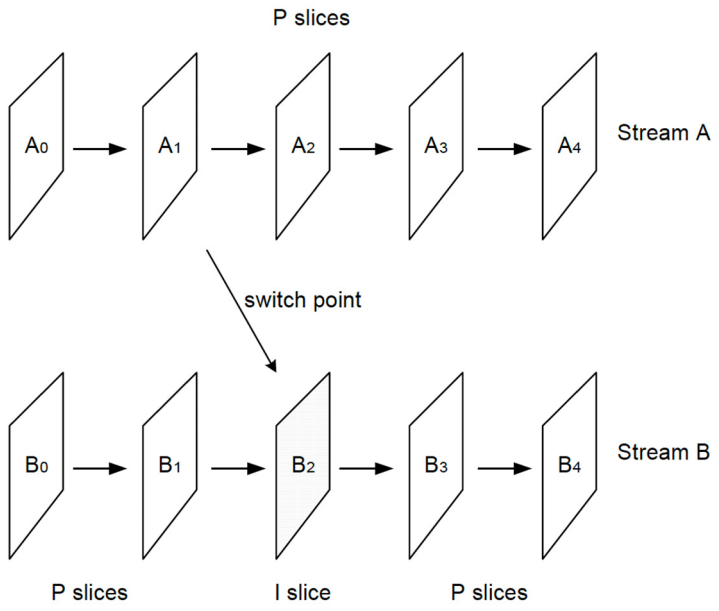

Figure 2-1 Switching streams using I-slices

SP-slices are designed to support switching without the increased bitrate penalty of I-slices. Figure 2-2 shows how they may be used. At the switching point (frame 2 in each sequence), there are now 3 coded SP-slices. These are coded using motion compensated prediction (making them more efficient than I-slices). SP-slice A2 can be decoded using reference frame A1; SP-slice B2 can be decoded using reference frame B2. The key to the switching process is SP-slice AB2 (known as a switching SP-slice): this is created in such a way that it can be decoded using motion-

compensated reference frame A1, to produce decoded frame B2 (i.e. the decoder output frame B2 is identical whether decoding B1 followed by B2 or A1 followed by AB2). An extra SP-slice is required at each switching point (and in fact another SP-slice, BA2, would be required to switch in the other direction) but this is still more efficient than encoding frames A2 and B2 as I-slices.

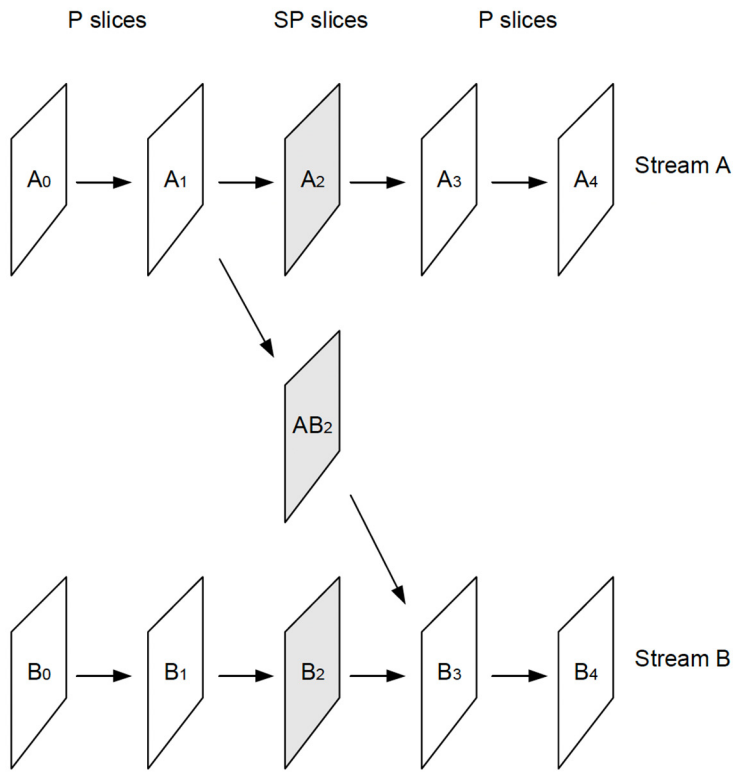

Figure 2-2 Switching streams using SP-slices

SAMSUNG-1041.

113. Of course one way to encode Stream A at one bitrate and Stream B at another bitrate is to use a different resolution for each stream.

114. A comprehensive overview can be found in Karczewicz M, et al. SAMSUNG-1033, which is incorporated by reference in this declaration in full.

115. H.264 specifies a mechanism called the Network Abstraction Layer – NAL – for encapsulating the coded video data and associated parametric data into data units that may be stored or transmitted.

> 3.89 NAL unit: A syntax structure containing an indication of the type of data to follow and *bytes* containing that data in the form of an RBSP interspersed as necessary with *emulation prevention bytes*.

SAMSUNG-1032 clause 3.97

> Scalable video coding is specified in Annex G allowing the construction of bitstreams that contain sub-bitstreams that conform to this Specification. For temporal bitstream scalability, i.e., the presence of a sub-bitstream with a smaller temporal sampling rate than the bitstream, complete access units are removed from the bitstream when deriving the sub-bitstream. In this case, high-level syntax and inter prediction reference pictures in the bitstream are constructed accordingly. For spatial and quality bitstream scalability, i.e., the presence of a sub-bitstream with lower spatial resolution or quality than the bitstream, NAL units are removed from the bitstream when deriving the sub-bitstream. In this case, inter-layer prediction, i.e., the prediction of the higher spatial resolution or quality signal by data of the lower spatial resolution or quality signal, is typically used for efficient coding.

SAMSUNG-1032.

III. Relevant Legal Standards

116. I have been asked to provide my opinions as to whether claims 2-4 and 11 of the '995 Patent would have been obvious to a person of ordinary skill in the art as of the earliest claimed priority date of the '995 patent (March 30, 2008) ("Critical Date").

117. I am an engineer by training and profession. The opinions I express in this declaration involve the application of my technical knowledge and experience to the evaluation of certain prior art with respect to the '995 Patent. In addition, I understand that the following legal principles apply.

118. It is my understanding that, in determining whether claims of the '995 patent are obvious in this proceeding, the claim terms are generally given their ordinary and customary meaning as understood by a person of ordinary skill in the relevant art. A person of ordinary skill in the art would read the claim terms in the context of the entire patent specification in which they appear, as well as the prosecution history of the patent.

119. It is my understanding that a claim is unpatentable under 35 U.S.C. § 103 if the claimed subject matter as a whole would have been obvious to a person of ordinary skill in the art at the time of the alleged invention. I also understand that an obviousness analysis takes into account the scope and content of the prior art, the differences between the claimed subject matter and the prior art, and the level of ordinary skill in the art at the time of the invention.

120. In determining the scope and content of the prior art, it is my understanding that a reference is considered relevant prior art if it falls within the field of the inventor's endeavor. In addition, a reference is prior art if it is reasonably pertinent to the particular problem with which the inventor was involved. A reference

is reasonably pertinent if it logically would have commended itself to an inventor's attention in considering his problem. If a reference relates to the same problem as the claimed invention, that supports use of the reference as prior art in an obviousness analysis.

121. To assess the differences between prior art and the claimed subject matter, it is my understanding that 35 U.S.C. § 103 requires the claimed invention to be considered as a whole. This "as a whole" assessment involves showing that one of ordinary skill in the art at the time of invention, confronted by the same problems as the inventor and with no knowledge of the claimed invention, would have selected the elements from the prior art and combined them in the claimed manner.

122. It is my further understanding that several rationales may be applied for combining references or modifying a reference to show obviousness of claimed subject matter. These rationales include: combining prior art elements according to known methods to yield predictable results; simple substitution of one known element for another to obtain predictable results; a predictable use of prior art elements according to their established functions; applying a known technique to a known device (method or product) ready for improvement to yield predictable results; choosing from a finite number of identified, predictable solutions, with a reasonable expectation of success; and some teaching, suggestion, or motivation in the prior art that would have led one

of ordinary skill to modify a prior art reference or to combine prior art teachings to arrive at the claimed invention.

IV. Person of Ordinary Skill in the Art

123. It is my understanding that when interpreting the claims of the '995 Patent I must do so based on the perspective of one of ordinary skill in the art at the time of the alleged invention ("POSITA"). For purposes of my analysis in this declaration, I have taken the earliest claimed priority date of the '995 Patent (May 30, 2008) as the date of the alleged invention ("Critical Date"). I understand that the factors considered in determining the ordinary level of skill in a field of art include the level of education and experience of persons working in the field; the types of problems encountered in the field; the teachings of the prior art, and the sophistication of the technology at the time of the alleged invention. I understand that a POSITA is not a specific real individual, but rather is a hypothetical individual having the qualities reflected by the factors above. I understand that a POSITA would also have knowledge from the teachings of the prior art, including the art cited below.

124. Taking these factors into consideration, it is my opinion that one of ordinary skill in the art in the field of digital video coding as of the Critical Date, would have had a bachelor's degree in computer science, electrical engineering, computer engineering, or a related field, with 2-3 years of experience in digital video processing,

or a related field. Additional graduate education could substitute for professional experience, or additional professional experience could substitute for formal education.

125. I have possessed the qualifications of a POSITA since the Critical Date of the ’995 Patent, and long before.

V. Overview of the Subject Patent US10218995

126. The ‘995 Patent is a division of a PCT application filed May 28, 2009, and derived from a pair of Japanese applications, the earliest of which was filed May 30, 2008. ’995 Patent, Cover.

A. Overview

1. Field of Art

127. The stated field of art is systems methods and programs for encoding, decoding and reencoding moving pictures, “adapted to work on moving picture sequences to implement processes such as those for superresolution enlargement.” ‘995 Title and 1:23-31.

2. Background - Problem statement, Admitted Prior Art

128. The patent discloses a two or more layer hierarchical video coding system. The patent admits there is prior art in the MPEG standards and the SVC -scalable video coding – of the MPEG-4 standard. A stated problem with the existing art is stated to be: "failures to allot a sufficient code rate would cause deficiencies" '995 2:15-16 and "failures to allot a sufficient code rate would degrade image qualities 35 of predictive pictures or predictive blocks," '995 2:33-35.

129. A second stated problem is: "in such the hierarchical encoding, even if the encoding process implemented was reversible, input moving pictures would undergo a band limitation to information on their spatial frequency components in the spatial direction that can be represented by the standard resolution," '995, 2:45-50; and that while inter-layer prediction in hierarchical coding allows estimates to be made of new information on spatial frequency components, this is "failing to encode and transmit more information on spatial frequency components than the information on spatial frequency components that can be represented by the standard resolution" '995, 2:59-63. Therefor an object of the techniques described in the '995 Patent is "to encode and transmit more information on spatial frequency components than information on spatial frequency components that can be represented by a resolution of input moving pictures."

3. Summary of the disclosed subject matter

130. The technologies employed by the '995 Patent are not described in a clear manner in the specification, which obfuscates the simplicity of the technologies and that that they are in fact well-known in the art. Several of the known concepts implicated by the '995 Patent include:

- Resolution; standard resolution
- Enlargement, enlarger, enlarged; superresolution enlargement
- Conversion, converter; resolution converter

- Extended, extension
- Subsequence; two or more pictures

131. As discussed above, '995 uses the term "resolution" to refer to the information content of the image in some instances, i.e., the "true" resolution of the image as perceived when presented to a human viewer, while in other instances the term is used to refer to the number of pixels in the image.

132. The '995 specification uses the term enlargement to refer to an upsampling of the number of pixels representing the image information to a larger number. The specification then refer to the enlarged image as "higher resolution". As explained above, such a use of the term is found in the art, but it does not mean the information content of the image is equal to the theoretical maximum spatial frequency content of that number of "higher resolution" pixels. The specification uses the term enlargement to refer to part of a sequence of operations that also include "resolution conversion." As discussed below, although the '995 specification separates these two operations and identifies them separately in figures and descriptions, they can in fact be internal steps in the disclosed process of superresolution by registering multiple images.

133. The '995 specification describes conversions in some contexts as a downsampling of the number of pixels representing the image information to a smaller number. The patent uses the term "resolution conversion" but like the case above with

enlargement, this operation does not necessarily change information content of the image, although it reduces the number of pixels to a smaller number.

> … a first superresolution enlarger configured to work on the subsequence of the sequence of moving pictures with the standard resolution to implement a process for a first super-resolution enlargement to create a set of super-resolution enlarged pictures with a resolution higher than the standard resolution, a first resolution converter configured to work on the set of super-resolution enlarged pictures to implement a process for a first resolution conversion to create a set of super-resolution enlarged and converted pictures with the standard resolution, …
> '995 3:25-35

134. The '995 specification also discusses "extending" the frequencies of the image data in certain parts of the specification. The context of this use includes restoring high spatial frequencies within an image having the same number of pixels for the input image and the output image.

135. In the art, processes for enhancing a single image using superresolution in generally involves 1) accepting as inputs, multiple images that are imaging the same scene but with different spatial offsets, 2) registering the pixel arrays of the multiple image using sub-pixel accuracy, 3) filtering and outputting the enhanced image containing higher spatial frequency information with the same number of pixels as the input image.

136. The '995 specification and claims split step 2 of the above process into two steps. For example:

To solve the problems described, according to the present invention, there is a moving picture encoding system comprising, as illustrated in FIG. 9 for instance, a first encoder configured to work on a subsequence of a sequence of moving pictures with a standard resolution to implement a first combination of processes for an encoding and a decoding to create a first sequence of encoded bits and a set of decoded pictures with the standard resolution, a first superresolution enlarger configured to work on the subsequence of the sequence of moving pictures with the standard resolution to implement a process for a first super-resolution enlargement to create a set of super-resolution enlarged pictures with a resolution higher than the standard resolution, a first resolution converter configured to work on the set of super-resolution enlarged pictures to implement a process for a first resolution conversion to create a set of super-resolution enlarged and converted pictures with the standard resolution, and a second encoder configured to have the set of super-resolution enlarged and converted pictures from the first resolution converter as a set of encoding target pictures to implement a second combination of processes for a prediction and an encoding to create a second sequence of encoded bits.

FIG. 9

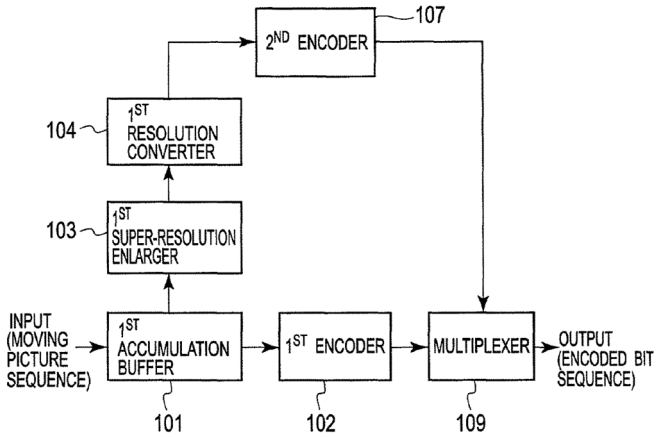

Here, as illustrated in FIG. 7 for instance, it may well have the second encoder configured to have the set of decoded pictures from the first encoder as a set of reference pictures to implement the second combination of processes for the prediction and the encoding to create the second sequence of encoded bits.

137. Citing to the specification above, the '995 specification states that the first encoder shown in Fig. 9 works on a subsequence of the sequence of pictures and the first superresolution enlarger works on the [same] subsequence of the sequence of pictures. It does not explain how the latter use of the subsequence creates a set of super-resolution enlarged pictures with a resolution higher than the standard resolution. It does not explain how the "resolution conversion" takes that input and produces a standard resolution output, nor does it explain how this results in "a set of encoding target pictures", and the term "target pictures" is not specifically defined.

138. Furthermore, the method disclosed by the '995 specification cited above does not clearly state that the purpose for "accumulation buffers" is to hold the multiple images that are inputs to this process.

139. The method disclosed by the '995 specification elevates the internal processes of sub-pixel generation and generation of the output image at the same resolution as the input image to the seemingly major steps of "superresolution enlargement" and "resolution conversion".

140. The "superresolution enlargement" as disclosed includes a process of interpolating the entire image to generate a set of pixels that correspond to every one of the sub-pixel locations. So if the process were to employ ¼-pixel accuracy, the '995 specifies generation of an array of interpolated pixels that is 16 times more pixels than the input image – 4 times more horizontally and four times more vertically. The

specification does not clearly explain how the interpolation would be performed and does not clearly describe the buffers needed to hold the enlarged pixel arrays. The specification also does not describe the process to register the enlarged arrays of pixels of all members of the "subsequence" or "two or more pictures" that may result in higher spatial frequency content. Note: Fig. 4 does do this – it clones the Park admitted art.

141. The '995 Patent describes a layered video coding system that employs conventional super-resolution algorithms with an objective to enhance the quality of base-layer reference pictures in an enhancement layer. FIG. 1's depiction of an encoding apparatus is instructive:

FIG. 1

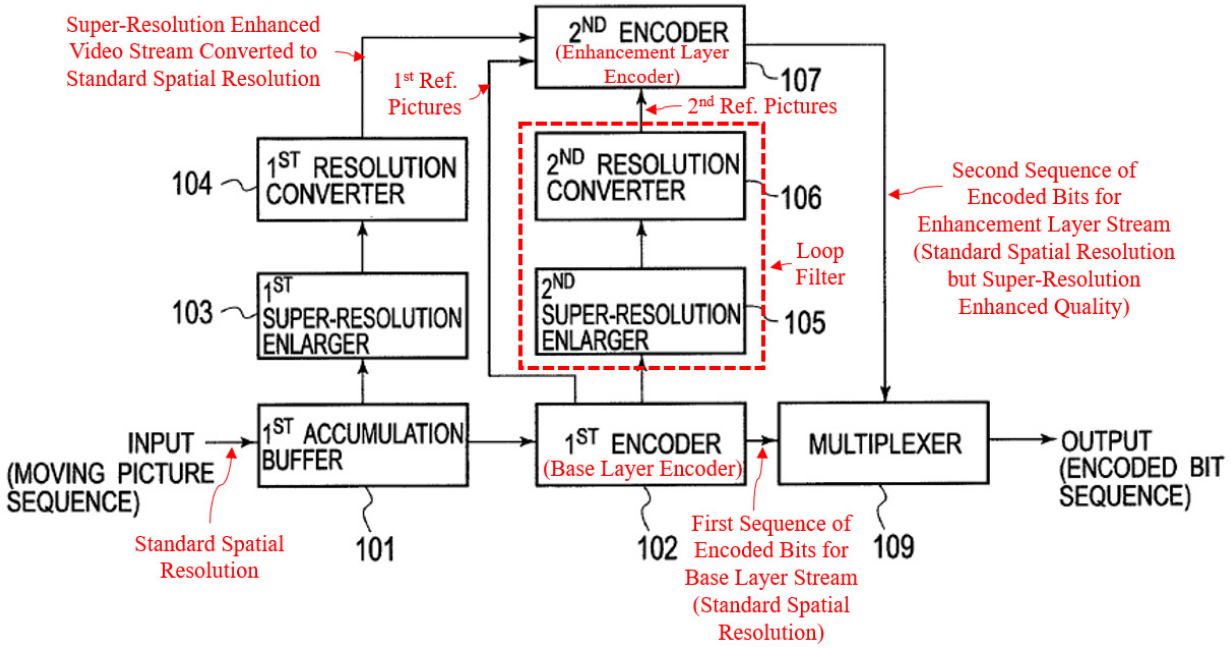

SAMSUNG-1001, FIG. 1 (annotated)

142. As shown above, the encoding apparatus passes pictures from the input video through an accumulation buffer 101 to each of two encoding paths. SAMSUNG-1001, 13:40-17:45. In the first path, a base version of the input video is encoded by the first encoder 102 to produce a first coded bitstream for the base version of the video. *Id.*, 13:46-14:9. In the second path, a super-resolution enhanced version of the input video is encoded by the second encoder 107 to produce a second coded bitstream for the super-resolution enhanced version of the input video. *Id.*, 15:30-42. The system generates the super-resolution enhanced version of the input video using (i) a first super-resolution enlarger 103 to increase the spatial resolution and information content (e.g., quality) of pictures in the input video, and then using (ii) a first resolution converter 104 to reduce the spatial resolution of the super-resolution enlarged video. *Id.*, 14:10-48. For each individual input video picture that is to be subjected to super-resolution processing, the first accumulation buffer accumulates subsequences of pictures from the neighborhood of the input video picture that is to be super-resolution enhanced, in which the pictures in the subsequences are registered with sub-pixel accuracy to provide a corresponding super-resolution image. *Id.*, 4:34-49.

143. To remove redundancies in information coded between the base- and enhancement-layer streams, the second encoder 107 implements inter-layer predictive processes to predict pictures in the enhancement-layer stream from decoded pictures in the base-layer stream. SAMSUNG-1001, 15:30-64. Decoded pictures from the base-

layer stream can also be enhanced before being used as references by the second encoder 107 by subjecting base-layer pictures that have been encoded and then decoded by the first encoder 102 to processing by the second-resolution enlarger 105 and second-resolution converter 106. *Id.*, 14:49-16:18. The super-resolution enlarger 105 and second-resolution converter 106 form a type of loop filter to enhance the quality of the reference picture and revert the reference picture back to a standard resolution. The second encoder 107 selects either non-super resolution enhanced base layer pictures or super-resolution enhanced base layer pictures as reference pictures for encoding of the enhanced video stream. SAMSUNG-1001, 15:30-16:45. The base and enhancement layer streams are then multiplexed (109) into a single output signal, together with a signal indicating which base-layer picture was selected, and the multiplexed signal is transmitted to a decoding apparatus. *Id.*, 16:64-17:20, 16:46-63, 29:67-30:5, 59:61-60:20.

144. FIG. 26 illustrates techniques for decoding the multiplexed signal from the encoding apparatus of FIG. 1. SAMSUNG-1001, 59:4-41, 50:39-54:6.

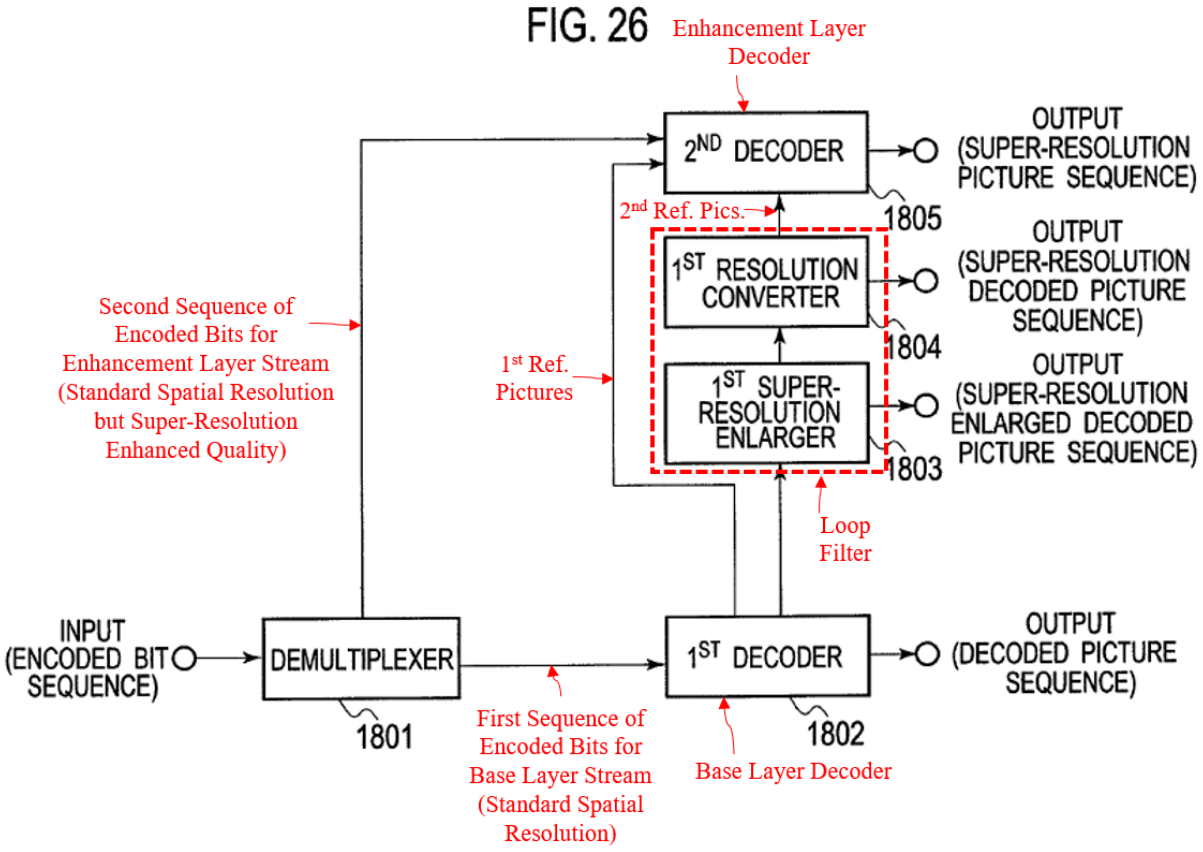

SAMSUNG-1001, FIG. 26 (annotated)

145. Demultiplexer 1801 parses the input encoded bit sequence to produce the first and second bitstreams corresponding to the base- and enhancement- layer video streams, respectively. SAMSUNG-1001, 50:52-51:18. The first decoder 1802 decodes the base layer stream and the second decoder 1805 decodes the enhancement layer stream. *Id.*, 51:16-37, 52:27-53:46. Like the encoding apparatus of FIG. 1, the decoding apparatus of FIG. 26 includes a loop filter in the form of a first super-resolution enlarger 1803 and a first resolution converter 1804 that enhances decoded base layer pictures from the first decoder 1802. *Id.*, 51:38-52:26. The output of the first decoder is also passed directly to the second decoder. *Id.* The second decoder 1805 selects

either non-super-resolution enhanced decoded base layer pictures or super-resolution enhanced decoded base layer pictures for inter-layer prediction of pictures in the enhancement-layer video stream, where the selection of which picture to used is based on reference picture selection information embedded in the signal from the encoding apparatus. *Id.*, 52:40-53:46.

146. In additional embodiments, the non-super-resolution enhanced decoded base layer pictures can be upscaled to a higher spatial resolution by a second resolution converter 1806 as shown in FIG. 23.

4. Comments

147. The specification repeatedly refers to sequences and subsequences of images and sets of images without identifying whether the reference is to one of the images from the sequence or subsequence or to all the images in the subsequence, not to whether the member of a set was the result of processing one image from sequence or subsequence, or from all the images in the subsequence.

148. The '995 patent comprises a set of very well-known image and video processing tools, including the following:

- Video coding
    - Multiple reference frames
- Scalable video coding
    - Selection of inter-layer reference data

- Enhanced reference pictures for motion compensated prediction
    - Superresolution

149. Beginning in the 1990s with H.263+, video coding standards employed the use of motion compensated prediction in which on a frame level or a block level, the reference picture could be selected from one of a number of pictures. As discussed in the background section, there is no way to mathematically define which reference picture is optimum. An encoder determines such empirically, and signals to the decoder which frame to use.

150. The '995 patent specification employs this well-known method and proposes for example that the reference pictures might comprise an unprocessed reference picture or a picture subjected to the superresolution processing. Due to the random nature of video data, either one may be optimum on a case by case basis.

151. The scalable video coding standards provide for prediction of a picture in an enhanced layer by temporal prediction within the same layer and/or prediction from a contemporaneous picture at a lower layer.

152. The '995 specification proposes the same thing.

153. Beginning with the H.261 standard in the 1980s, the standards provide for motion compensated prediction using a reference frame of a filtered version of the reference frame.

154. The '995 specification proposes using a filtered reference frame in which the filtering process is the well-known superresolution process.

155. Regarding superresolution , for a single picture k, a subsequence of pictures, say k-n to k+n is used. For each picture k, a spatial registration process is performed, in which at a sub-pixel accuracy the data in the picture is spatially translated to align the image of the objects in the scene. the aligned imaged are then combined, and filtered to produce a single output picture k' that has the same number of pixels as the input picture k, but may have a higher spatial frequency content.

B. Claims

156. Claims 2-4 and 11 of the '995 Patent recite the following language:

> 2. A moving picture decoding system comprising:
>
> a demultiplexer configured to work on a sequence of input encoded bits to implement a process for a prescribed demultiplexing to output at least a first and a second sequence of encoded bits;
>
> a first decoder configured to acquire the first sequence of encoded bits obtained with a standard resolution at the demultiplexer to implement thereon a process for a prescribed first decoding to create a sequence of decoded pictures with a standard resolution;
>
> a first super-resolution enlarger configured to acquire the sequence of decoded pictures created with a standard resolution at the first decoder to work on the sequence of decoded pictures to implement an interpolation of pixels with a first enlargement to create a sequence of super-resolution enlarged decoded pictures with a first resolution higher than a standard resolution;
>
> a first resolution converter configured to acquire the sequence of super-resolution enlarged decoded pictures created at the first super-resolution enlarger to work on the sequence of super-resolution enlarged decoded pictures to implement a process for a prescribed resolution conversion to create a sequence of super-resolution decoded pictures with a standard resolution;
>
> a second decoder configured to acquire the second sequence of encoded bits obtained with a standard resolution at the demultiplexer as a set of decoding targets, the sequence of decoded pictures created with the standard resolution at the first decoder as a set of first reference pictures, and the sequence of super-resolution decoded pictures created with the standard

resolution at the first resolution converter as a set of second reference pictures, and select one of the set of first reference pictures and the set of second reference pictures based on reference picture selection information to implement a combination of processes for a prescribed prediction and a prescribed second decoding being a decoding with an extension of the standard resolution, to create a sequence of super-resolution pictures decoded with the standard resolution based on the set of decoding targets and the set of selected reference pictures; and

a second resolution converter configured to acquire the sequence of decoded pictures with the standard resolution from the first decoder to work on the sequence of decoded pictures to implement an interpolation of pixels with the second enlargement to create a sequence of enlarged decoded pictures with a high resolution as a second resolution higher than the standard resolution,

wherein the set of decoding targets, the set of first reference pictures, and the set of second reference pictures have the same value in spatial resolution.

3. A moving picture decoding method comprising:

a step of implementing a process for a prescribed demultiplexing on a sequence of input encoded bits, outputting at least a first and a second sequence of encoded bits;

a step of acquiring the first sequence of encoded bits obtained with a standard resolution through the process for the prescribed demultiplexing, implementing thereon a process for a prescribed first decoding, creating a sequence of decoded pictures with the standard resolution;

a step of acquiring the sequence of decoded pictures created with the standard resolution through the process for the prescribed first decoding, working on the sequence of decoded pictures to implement an interpolation of pixels with a first enlargement, creating a sequence of super-resolution enlarged decoded pictures with a first resolution higher than the standard resolution;

a step of acquiring the sequence of super-resolution enlarged decoded pictures created through the process for the prescribed super-resolution enlargement working on the sequence of super-resolution enlarged decoded pictures to implement a process for a first resolution conversion, creating a sequence of super-resolution decoded pictures with a standard resolution;

a step of acquiring the second sequence of encoded bits obtained with a standard resolution through the process for the prescribed demultiplexing as a set of decoding targets, the sequence of decoded pictures created with the standard resolution through the process for the prescribed first decoding as a set of first reference pictures, and the sequence of super-resolution decoded pictures created with the standard resolution through the process for the prescribed resolution conversion as a set of second reference pictures, and selecting one of the set of first reference pictures and the set of second reference pictures based on reference picture selection information to implement a combination of processes for a prescribed prediction and a

prescribed second decoding being a decoding with an extension of the standard resolution, based on the set of decoding targets and the set of selected reference pictures to create a sequence of super-resolution pictures decoded with the standard resolution; and

a step of acquiring the sequence of decoded pictures created with the standard resolution through the process for the prescribed first decoding working on the sequence of decoded pictures to implement an interpolation of pixels with the second enlargement, creating a sequence of enlarged decoded pictures with a high resolution as a second resolution higher than the standard resolution,

wherein the set of decoding targets, the set of first reference pictures, and the set of second reference pictures have the same value in spatial resolution.

4. A recording medium storing a moving picture decoding program comprising a non-transitory computer-readable medium configured to have a computer execute:

a step of implementing a process for a prescribed demultiplexing on a sequence of input encoded bits, outputting at least a first and a second sequence of encoded bits;

a step of acquiring the first sequence of encoded bits obtained with a standard resolution through the process for the prescribed demultiplexing, implementing thereon a process for a prescribed first decoding, creating a sequence of decoded pictures with the standard resolution;

a step of acquiring the sequence of decoded pictures created with the standard resolution through the process for the prescribed first decoding, working on the sequence of decoded pictures to implement an interpolation of pixels with a first enlargement, creating a sequence of super-resolution enlarged decoded pictures with a first resolution higher than the standard resolution;

a step of acquiring the sequence of super-resolution enlarged decoded pictures created through the process for the prescribed super-resolution enlargement working on the sequence of super-resolution enlarged decoded pictures to implement a process for a first resolution conversion, creating a sequence of super-resolution decoded pictures with a standard resolution;

a step of acquiring the second sequence of encoded bits obtained with a standard resolution through the process for the prescribed demultiplexing as a set of decoding targets, the sequence of decoded pictures created with the standard resolution through the process for the prescribed first decoding as a set of first reference pictures, and the sequence of super-resolution decoded pictures created with the standard resolution through the process for the prescribed resolution conversion as a set of second reference pictures, and selecting one of the set of first reference pictures and the set of second reference pictures based on reference picture selection information to implement a combination of processes for a prescribed prediction and a prescribed second decoding being a decoding with an extension of the standard resolution, based on the set of decoding targets and the set of selected

reference pictures to create a sequence of super-resolution pictures decoded with the standard resolution; and

a step of acquiring the sequence of decoded pictures created with the standard resolution through the process for the prescribed first decoding, working on the sequence of decoded pictures to implement an interpolation of pixels with the second enlargement creating a sequence of enlarged decoded pictures with a high resolution as a second resolution higher than the standard resolution,

wherein the first resolution is different from the second resolution,

wherein the standard resolution of the second sequence of encoded bits is the same as the standard resolution of the super-resolution decoded pictures,

and wherein the set of decoding targets, the set of first reference pictures, and the set of second reference pictures have the same value in spatial resolution.

11. The moving picture decoding system according to claim 2, wherein the second decoder divides a decoding target into a plurality of regions to select one of the set of first reference pictures and the set of second reference pictures for each divided region.

C. Prosecution History of the '995 Patent

I have reviewed the Prosecution History of the '995 Patent. *See* SAMSUNG-1002. The application (U.S. Serial No. 14/692,138) resulting in the '995 Patent was filed on April 21, 2015, by JVC Kenwood Corporation. SAMSUNG-1001, face. The '995 Patent claims priority to several earlier-filed applications, with the earliest claimed priority date being May 30, 2008. *Id.*

157. During original examination, four cycles of rejections and responses between the Examiner and the applicant ensued before allowance. SAMSUNG-1002, 273-296 and 300-325 (first action and response), 207-228, 230-255 (second action and response), 131-150 and 154-179 (third action and response), 58-105 (fourth action and response), 9-19 (notice of allowance). In each Office Action, the claims were rejected

as obvious over prior art combinations based on Phek[5] (SAMSUNG-1005) along with additional references including Holcomb (SAMSUNG-1024), Barkley (SAMSUNG-1025), and Suzuki (SAMSUNG-1026).

158. Throughout examination, the Examiner repeatedly found that Phek discloses most limitations of application clam 23 (issued claim 2) and related claims but relied on additional references for disclosure of the "first resolution converter" and "second resolution converter" limitations. SAMSUNG-1002, 88-91, 165-167. For example, although the Examiner stated that Phek "does not explicitly disclose a first resolution converter," the Examiner nonetheless observed that "the use of resolution converters for multi-resolution encoding and decoding to enhance current and reference frames and to implement resampling of pixels was well known in the art at the time of the invention was made as evidence from the teaching of Holcomb." SAMSUNG-1002, 89 (citing SAMSUNG-1024, 3:3-12, 3:56-64, 7:23-48, FIGS. 2-3). The applicant never disputed the Examiner's finding in this regard.

159. The Examiner likewise acknowledged that Phek and Holcomb "do not explicitly disclose a second resolution converter" as claimed and relied on Barkley's teaching of "spatial enhancement layers" for this limitation. SAMSUNG-1002, 90-91

[5] The file history refers to a machine translation of the Phek prior art reference by the name "Ong" rather than Phek.

(citing SAMSUNG-1025, [0053]-[0056]). The applicant also never disputed the relevance of Barkley's teachings in this regard.

160. In the fourth and final rejection before allowance, the Examiner asserted that Barkley teaches the use of two sets of reference pictures as recited by the then-pending language of the "second decoder" limitation in claim 23. SAMSUNG-1002, 91. The Examiner specifically asserted that Barkley met the reference picture selection requirement of claim 23 since Barkley's decoder "selectively decode[s] video information from the base layer and one or more enhancement layers to playback or reproduce the video information at a desired level of quality." *Id.* (citing SAMSUNG-1025, [0005], FIGS. 1, 3, 5-8). In response, the applicant amended claim 23 to recite that the "second decoder" must further "select one of the set of first reference pictures and the second set of reference pictures ***based on reference picture selection information***." SAMSUNG-1002, 65-66 (emphasis added). The applicant argued that "*Barkley* (newly-cited) only encodes information on a plurality of layers" and "[t]hus, *Barkley's* device fails to disclose a technique for selecting one of two kinds of reference pictures and fails to suggest using any such reference picture selection information to identify the selected reference picture." SAMSUNG-1002, 62 (emphasis in original). The Examiner subsequently allowed the application and identified the "second decoder" limitation (including the added requirement for "reference picture selection information") in the reasons for allowance. *Id.*, 17-18.

VI. Summary of the Applied Prior Art

161. The following pieces of prior art render obvious the alleged invention of the '995 Patent in the combination addressed further below (Ground 1).

A. Overview of Phek

162. Phek discloses a video coding system that uses "[i]nterlayer prediction … for hierarchical encoding in order to improve encoding efficiency." SAMSUNG-1005, [0014]. "One example of hierarchical encoding that uses interlayer prediction is … scalable video encoding." *Id.* Phek's interlayer coding system includes a basic layer and an enhanced layer, where "an intra image of the basic layer or a reconstructed image of the basic layer" is used "as an additional reference image for encoding the image of the enhanced layer." *Id.* Moreover, "super-resolution processing … is used to improve these additional reference images" from the basic layer. *Id.*; *see also id.*, [0011]-[0020], FIGS. 1a-1b, 3a-3b, 4a-4b, 5.

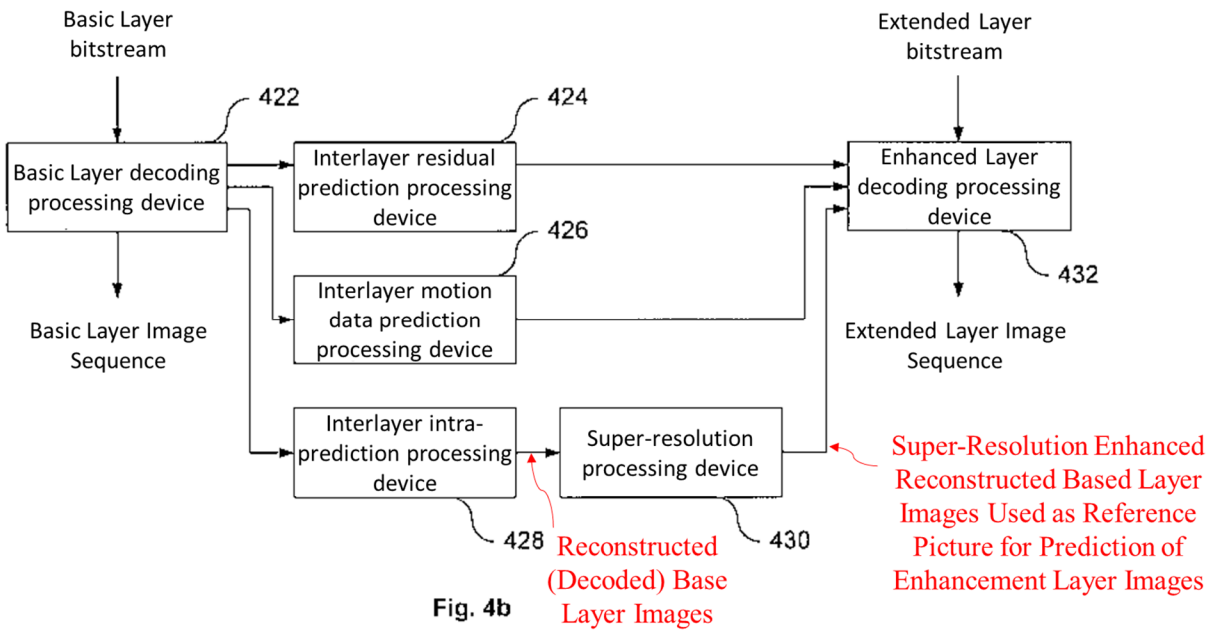

SAMSUNG-1005, FIG. 4b (modified and annotated)[6].

[6] For ease of reading, labels have been added in each of Phek's figures based on the labels provided in the certified English translation. *See* SAMSUNG-1005. In Phek and English translations of Phek (SAMSUNG-1005 and -1031) use the terms "base" and "basic" layers (or streams) interchangeably, and further uses the terms "extended," "enhanced," and "enhancement" layers (or streams) interchangeably. In my declaration, I have provided cites to and quotes disclosure from the certified translation that uses different ones of these terms, but in my declaration, I typically refer simply to "base" and "enhancement" layers (or streams) consistent with common usage of these terms in the field.

B. Overview of Segall

163. Segall is an IEEE paper titled "Spatial Scalability Within the H.264/AVC Scalable Video Coding Extension." SAMSUNG-1006, 1. Segall surveys aspects of the scalable video coding (SVC) extension that "provide[] support for multiple display resolutions within a single compressed bit stream (or in hierarchically related bit streams), which is referred to [] as *spatial scalability*." *Id.* (emphasis in original). Segall describes spatial scalability with reference to a layered coding system like Phek's, which is illustrated in FIG. 1:

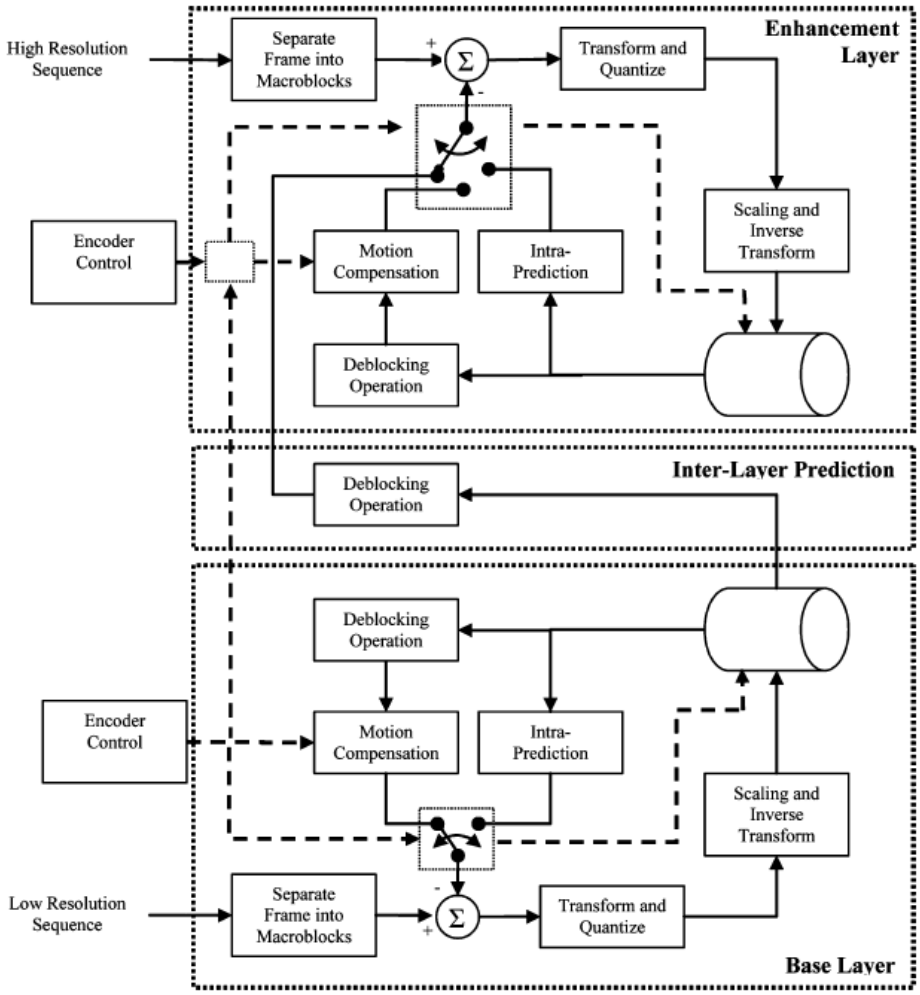

SAMSUNG-1006, FIG. 1

164. According to Segall, "[t]he 'base layer' encoder takes a lower resolution video sequence as input and encodes it with the H.264/AVC video coding standard while conforming to a legacy profile." SAMSUNG-1006, 2. "The enhancement layer encoder takes a higher resolution sequence as input" and encodes it "with ordinary H.264/AVC technologies." *Id.* "Moreover, inter-layer prediction can be used to provide additional coding choices" and "[f]or the case of intra-picture coded blocks in the base layer, reconstructed intensities provide a prediction for the enhancement layer." *Id.* "For the case of inter-picture coded blocks in the base layer, enhancement layer motion vectors and residual difference information an be predicted from the base layer." *Id.*

C. Overview of Martins

165. Martins is an IEEE paper titled "A Unified Approach to Restoration, Deinterlacing and Resolution Enhancement in Decoding MPEG-2 Video." SAMSUNG-1007, 1. Martins discloses an algorithm by which "[t]he quality and spatial resolution of video can be improved by combining multiple pictures to form a single super-resolution picture." *Id.*, Abstract. "The superresolution pictures obtained by the algorithm are of much higher visual quality and have lower [mean-squared error] than superresolution pictures obtained by simple spatial interpolation." *Id.* "The algorithm is based on motion-compensated spatial upsampling from multiple images and

decimation to the desired format." *Id.* FIG. 2 illustrates Martins' algorithm, which specifically includes a "decimation" process to downscale the super-resolution enlarged image to a lower spatial resolution:

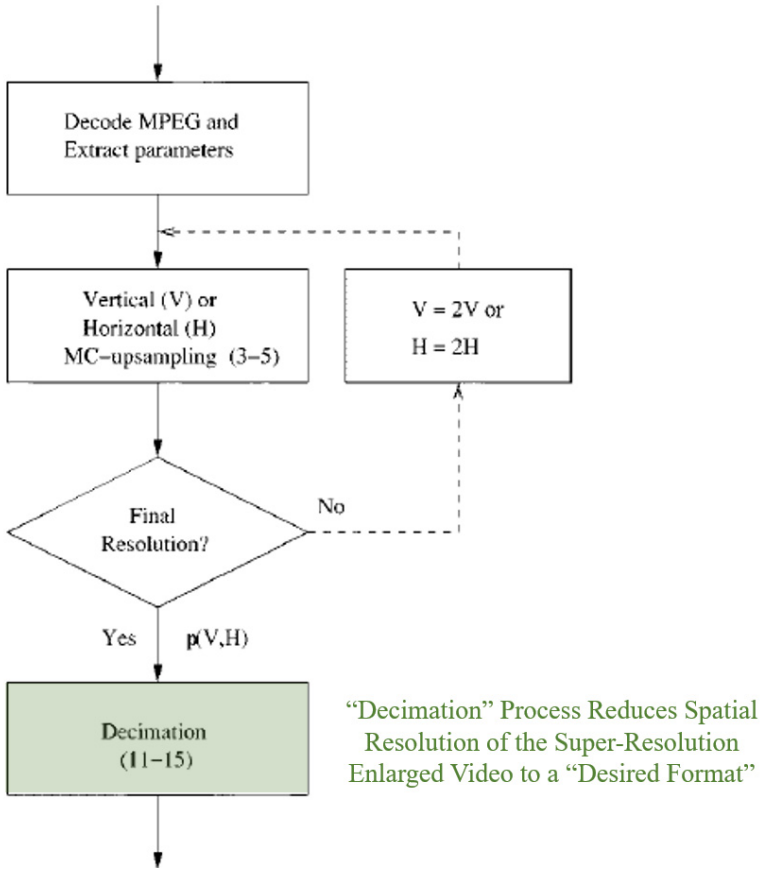

SAMSUNG-1007, FIG. 2 (annotated); *see also id.*, p. 5, § IV ("DECIMATION").

D. Overview of He

166. He discloses techniques for selective in-loop filtering in a scalable video coding system. He specifically focuses on selective in-loop deblock filtering to control deblock filtering parameters at each layer of scalable coding hierarchy. SAMSUNG-1008, [0002]-[0006], [0022], [0028], [0032]-[0037], FIGS. 1-4.

167. According to He, "[t]he deblocking filter enhances the decoded picture quality and increases the encoding efficiency by removing the block effects in the boundary of each 4x4, 8x8, and/or 16/16 block," although "[t]he deblocking filter[] … also consumes a significant amount of power and processing cycles." *Id.*, [0006]. "Disabling the entire deblocking filter [] provides a significant reduction of computational complexity and power consumption, especially in the decoder of a video processing system." *Id.*, [0028]. He thus proposes techniques for examining "the content of the video information … to determine whether to disable the deblock filtering," e.g., based on "a characteristic indicative of a relative amount of content complexity and/or a relative amount of motion of the video information" and "also based on power savings considerations." *Id.*, [0028], [0037].

168. FIG. 2 (reproduced below) depicts a video decoder 200 configured to implement selective deblock filtering. SASMUNG-1008, [0032], FIG. 2. The decoder 200 receives a coded bitstream (BTS) and performs prediction and reconstruction operations to decode at least a portion of a picture, thereby generating "unfiltered reconstructed frame information URF'." *Id.*, [0032]. URF' is provided to a deblocking filter 211, controlled by a deblock control circuit 221. *Id.*, [0033]-[0034]. Deblock control circuit 221 issues a "decoder filter control DFC signal" that selectively enables or disables the deblocking filter 211. *Id.*, [0034]. When filter 211 is disabled, deblock filtering operations are bypassed and "URF' is passed as the 'filtered' reconstructed

information RF' to a reference frame buffer 213 for use as a reference picture for motion-compensated prediction processes. *Id.* When filter 211 is enabled, URF' is filtered to generate RF' for use as a reference picture in the motion compensated prediction processes. *Id.*

169. He further explains that "the video encoder 100 provides control information within the bitstream BTS to cause the deblock control circuit 221 of the video decoder 200 to provide the DFC signal to adaptively disable deblock filtering for a corresponding slice or frame of URF' information being processed in the video decoder 200." *Id.*

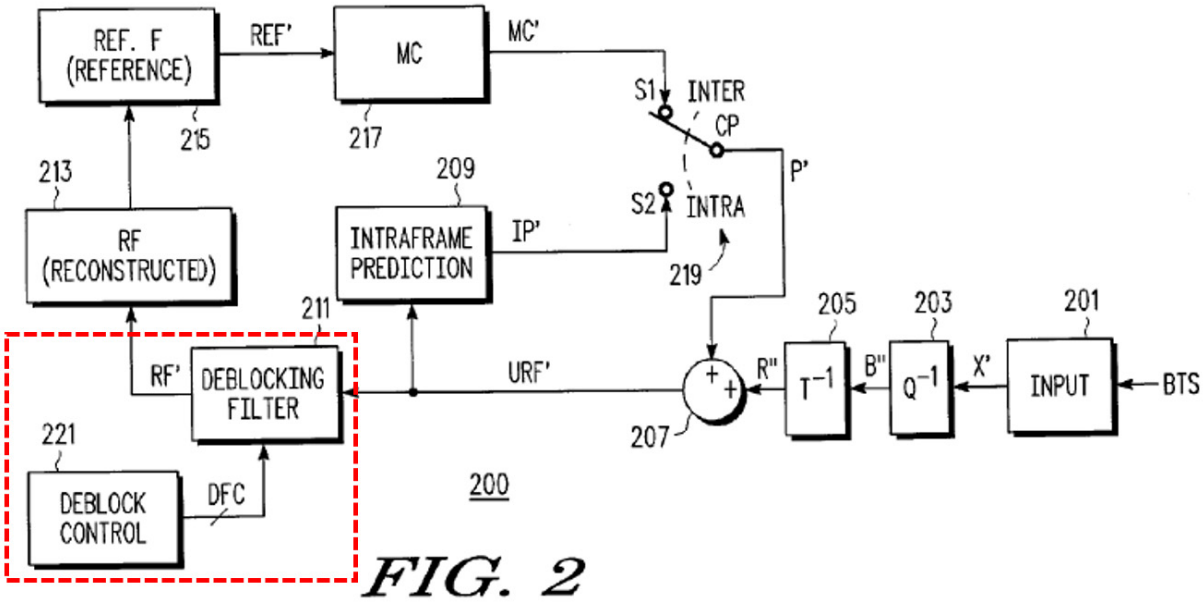

FIG. 2

In-Loop Deblocking Filter 211 and Control Circuit 221

SAMSUNG-1008, FIG. 2 (annotated)

VII. Claim Construction

170. I have not been asked to opine on the special meanings of claim terms within the '995 patent. I have been informed that the claim terms should be afforded their ordinary meaning in view of the specification and file history. By explaining the relevance of the prior art to the various terms and limitations in claims 2-4 and 11, I have not intended to formally construe any claim terms and I have not formed an opinion as to whether these terms are definite or supported by the specification of the '995 Patent.

VIII. Ground 1 – Claims 2-4 and 11 are Obvious under 35 U.S.C. § 103 based on Phek in view of Segall, Martins, and He

A. Overview of the Phek-Segall-Martins-He Combination

171. Like the '995 Patent, Phek discloses a layered video coding system that enhances reference picture quality in an enhancement layer by super-resolution processing. *Supra*, §III.A. While Phek's disclosure focuses on details of its super-resolution algorithm, Phek's description of the layered coding system itself (which uses the proposed super-resolution algorithm) is less detailed. Indeed, Phek acknowledges that its encoder/decoder descriptions are "simplified" and "do not have to be performed as shown." SAMSUNG-1005, [0013]. Phek's system is thus ripe for improvement.

172. Below, I address five straightforward modifications to Phek's system that would have been obvious to implement based on the teachings of Segall, Martins, and He.[7]

1. Obvious based on Segall to Encode/Decode Phek's Base and (First) Enhancement Layer Streams at the Same Spatial Resolution

173. Phek discloses a "hierarchical encoding" system "that uses interlayer prediction" between video streams coded at a base layer and an enhancement layer. SAMSUNG-1005, [0014]-[0015], FIGs. 4a-4b. Phek does not expressly disclose (nor does it restrict) the type(s) of hierarchical coding that can be implemented by its system, nor does it expressly disclose or restrict the relative spatial resolutions of the base- and enhancement-layer video streams. *Id.* "One example of hierarchical encoding that uses interlayer prediction is … scalable video encoding." SAMSUNG-1005, [0014].

174. Segall teaches that scalable coding systems can implement "combinations of temporal scalability (frame rate enhancement) and quality scalability (fidelity enhancement for pictures of the same resolution)" as well as "spatial scalability" for spatial resolution enhancement. SAMSUNG-1006, 1. Scalable video coding allows for the "mixing" of layers including "layers that provide temporal or quality scalability." *Id.*

[7] This overview of the Phek-Segall-Martins-He combination is referenced and incorporated in the analysis of each claim element in Section VIII.B below.

Hierarchical video coders can also be used for multi-view coding to encode/decode video streams corresponding to different viewpoints of a scene with the same spatial resolution. *Supra*, § II.G.4.

175. Based on Segall's teachings, it would have been obvious to implement Phek's system to encode/decode the base- and enhancement-layer streams at a same spatial resolution.[8] For example, it would have been obvious for Phek's first enhancement-layer[9] to implement quality scalability, temporal scalability, and/or multi-view coding—all of which can use hierarchical coding and interlayer prediction between

[8] A POSITA would have understood that the video streams encoded in the base- and enhancement layers can be obtained, and optionally pre-processed, in any suitable manner. For example, it would have been obvious for a video stream captured by a low-resolution camera to be super-resolution enhanced before being encoded (compressed) to increase the quality and detail of the video being encoded. SAMSUNG-1005, [0002] ("resolution and quality of images subject to transcoding and storage can be improved"); SAMSUNG-1012, 1-2. The enhanced video stream can be encoded in the enhancement layer and a temporally or quality-decimated version of the video stream can be encoded in the basic layer, consistent with common scalable encoding techniques.

[9] A second enhancement layer is described below in §VIII.A.2.

streams of the same spatial resolution. More specifically, quality scalability would have been obvious and beneficial to allow receivers of the scalable bitstream to decode different quality versions of video content depending on capabilities of the receiver and differences in channel bandwidth and transmission rates that can impact whether the receiver successfully receives a quality enhancement layer stream in addition to the base layer. Temporal scalability would have been obvious and beneficial to efficiently encode streams with different frame rates and to allow for higher frame rate decoding when a temporally enhanced stream is received, and multi-view coding would have been obvious and beneficial to allow receivers to decode video from multiple viewpoints (e.g., allowing for stereoscopic or 3D video reproduction). *See, e.g.*, SAMSUNG-1010, 1 ("SVC enables the transmission and decoding of partial bit streams to provide video services with lower temporal or spatial resolutions or reduced fidelity while retaining a reconstruction quality that is high relative to the rate of the partial bit streams. Hence, SVC provides functionalities such as graceful degradation in lossy transmission environments as well as bitrate, format, and power adaptation. These functionalities provide enhancements to transmission and storage applications."), 2 ("provides a number of benefits"), SAMSUNG-1006, 1-2 (describing benefits of spatial scalability in SVC); SAMSUNG-1009, 1:52-2:36; *supra*, §II.G.4-II.I.

176. Further, whether implementing quality scalability, temporal scalability, multi-view coding, or a combination thereof, it would have been obvious to code the

base- and enhancement-layer streams at the same spatial resolution—particularly when the spatial resolution of the base layer is adequate for an intended display device and the display does not support higher resolutions. Segall teaches, for example, that "lower resolution displays … are [] popular in applications constrained by size, power and weight." SAMSUNG-1006, 1. Upscaling Phek's first enhancement-layer video stream in time and/or quality—but not spatially—relative to the base-layer stream would have allowed lower resolution displays to present a temporally- or quality-enhanced video despite limitations on the display's native/maximum spatial resolution. According to Segall, "it is rarely justifiable to design a device with low display resolution with the capacity for decoding and down-sampling high resolution video material" since "[s]uch a requirement could increase the cost and power of the device" and results in "a waste of [the device's] receiving channel bit rate." *Id.* Similarly, in multi-view coding, different viewpoints can be encoded at the same spatial resolution in different layers to allow for reproduction of the video stream in each layer on the same display device.

177. Coding Phek's base- and enhancement-layer video streams at the same spatial resolution also would have been obvious as a predictable application of known layered coding techniques to achieve predictable results. A POSITA would have had a reasonable expectation of success implementing Phek's system in this manner especially since layered coding systems commonly coded video streams with the same spatial resolution before the Critical Date.

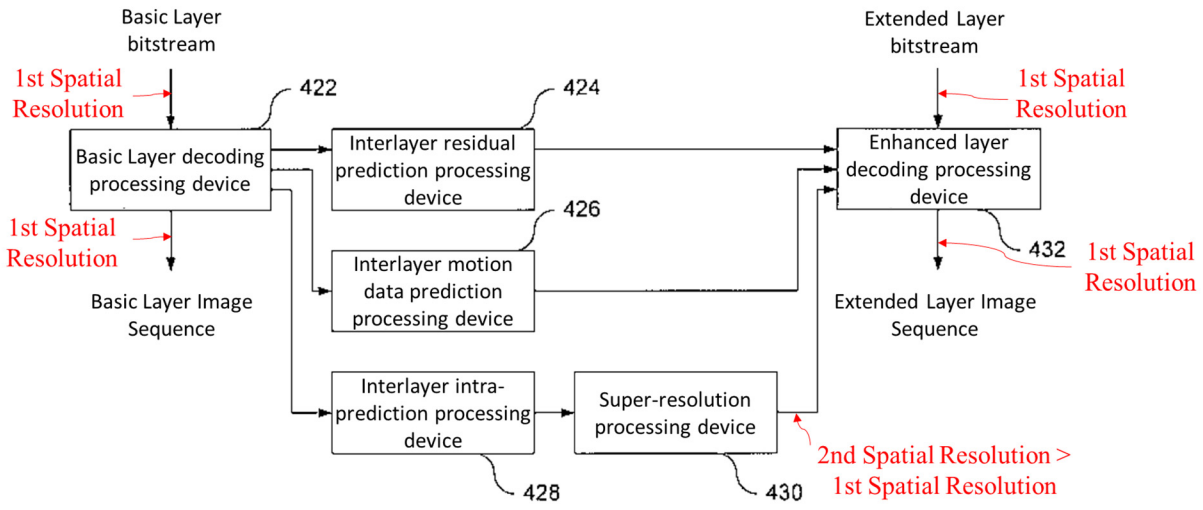

Fig. 4b

First Intermediate Illustration of Proposed Combination (Phek-Segall)

2. Obvious based on Segall to Implement a Second Enhancement Layer in Phek's System for Spa-tial Scalability

178. Segall teaches that scalable video coding allows for "the mixing of spatial scalability layers with other layers that provide temporal or quality scalability." SAMSUNG-1006, 1-2; *supra*, § VI.B. It would have been obvious based on Segall to implement a second enhancement layer in Phek's system, i.e., a second enhancement layer that codes a video stream with a higher spatial resolution than the video streams in the base and first enhancement layers. The second enhancement layer can be a spatially scalable layer, for example, that encodes video whose frames are predicted from frame(s) in the base layer, the first enhancement layer, or both. *Id.*

179. Encoding a video stream with a higher spatial resolution in the second enhancement layer would have been obvious to support display devices can render video at higher resolutions than the video coded in the base and first enhancement

layers. Segall, for example, recognized that "[t]he resolution diversity of current display devices motivates the need for spatial scalability." SAMSUNG-1006, 1. In particular, Segall noted that "larger format, high definition displays are becoming common in consumer applications, with displays containing over two million pixels readily available." *Id.* The provision of coded video streams at a lower resolution in the base and first enhancement layers as well as a higher-resolution stream in a second enhancement layer would have furthered Segall's goal of supporting a broader range of display devices through "resolution diversity." *Id.*

180. The addition of a second enhancement layer in Phek's decoder (including a second enhancement layer decoder processor) would have been beneficial to allow higher-definition display devices to decode and display the higher resolution video. For example, the decoder of a higher-definition display could switch from decoding a lower-layer stream to a higher-layer stream at a higher spatial resolution when the transmission rate of a streaming video program increases sufficiently to allow the decoder to successfully receive and decode the additional video data in the second enhancement layer. SAMSUNG-1006, 1. Segall underscores this point through its teaching that "[d]iverse, limited, and time-varying channel capacity provides an [additional] motivation for spatial scalability." *Id.* According to Segall, "[s]patial scalability allows for the rapid bit rate adaptation" that can be needed to address time-varying channel conditions. *Id.* Increased viewer satisfaction would be realized by allowing the decoder

to decode and display video at higher spatial resolutions when channel conditions are favorable, while nonetheless allowing the decoder to continue playing video from a lower-layer stream under degraded channel conditions.

181. The addition of a spatial enhancement layer to Phek's system also would have been obvious as a predictable application of known spatial scalability techniques to achieve predictable results. A POSITA would have had a reasonable expectation of success given the common use of multiple enhancement layers before the '995 Patent. For example, Segall teaches that standard scalable coding techniques before the '995 Patent "support[ed] multilayer scenarios including special multiple spatial scalability layers and the mixing of spatial scalability layers with other layers that provide temporal or quality scalability." SAMSUNG-1006, 3. Further, "[c]onsiderable flexibility is [] provided in regard to the selection of the reference layer for each enhancement layer[] …." *Id.*; *see also* SAMSUNG-1010, 2 (describing how "different types of scalability" can "be combined, so that a multitude of representations with different spatio-temporal resolutions and bit rates can be supported").

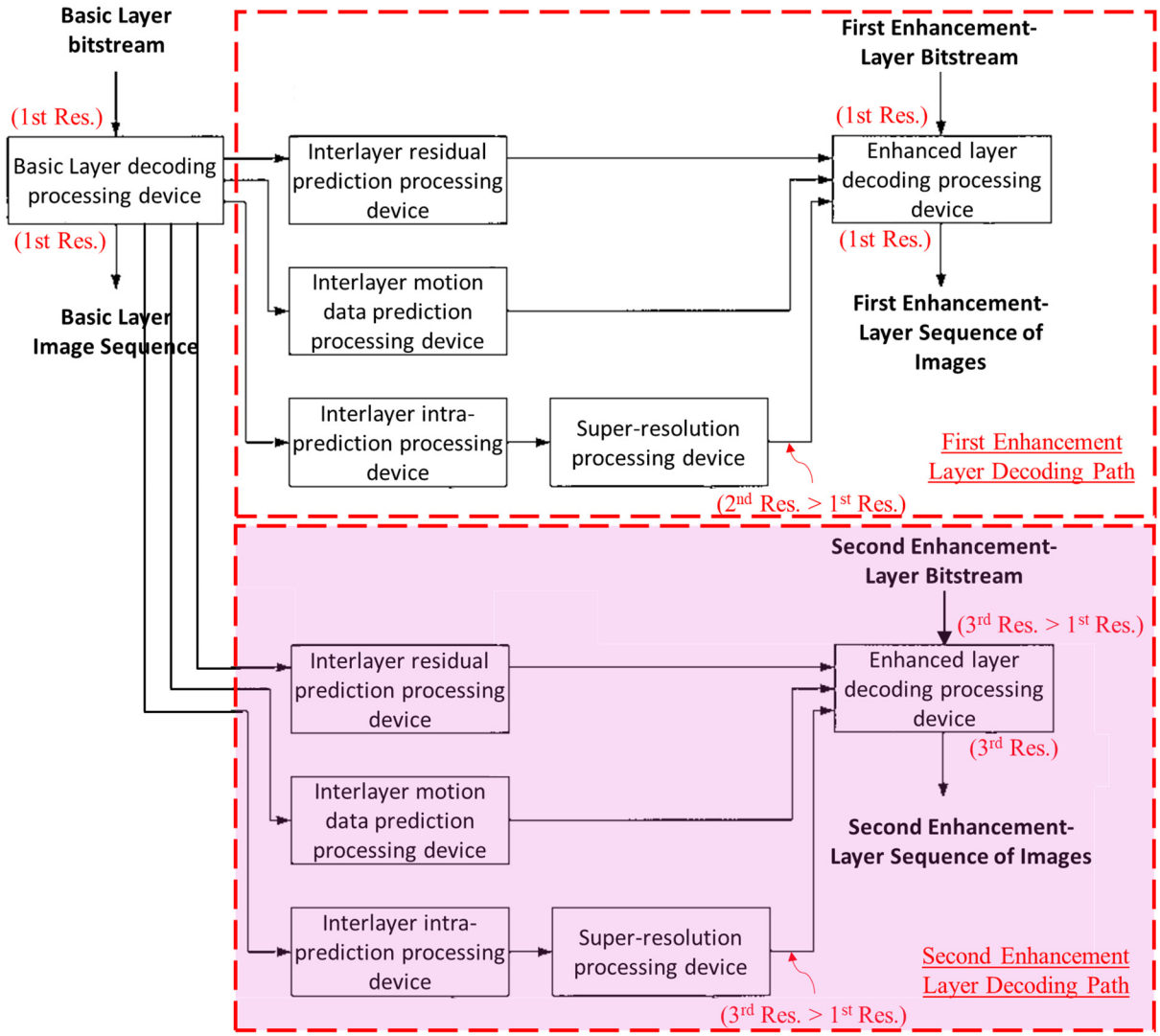

Second Intermediate Illustration of Proposed Combination (Phek-Segall)

3. Obvious based on Segall to Multiplex/Demultiplex Phek's Base and Enhancement Layer Bitstreams

182. Phek does not expressly disclose how the base-layer and enhancement-layer bitstreams are transmitted from the encoder to the decoder. It nonetheless would have been obvious to a POSITA to multiplex the respective bitstreams from the base-, first-enhancement, and second-enhancement layers of the encoding apparatus in

Phek-Segall-Martins-He combination into a single, composite bitstream for transmission. The hierarchical decoding device in the combination would then predictably include a demultiplexer to parse the separate basic and enhancement-layer bitstreams. Multiplexing and demultiplexing bit streams in the layered coding system of the combination would have been obvious based on the teachings of Phek and Segall.

183. For example, Phek itself describes a "video source [that] is separated from the other sources using an inverse multiplexer 202." SAMSUNG-1005, [0010], FIG. 2. Phek then discloses that its hierarchical video encoder (FIG. 4a) produces separate bitstreams for the base- and enhancement-layers, and that its hierarchical video decoder (FIG. 4b) separately processes the base-layer bitstream and the enhancement-layer bitstream. *Id.*, [0014]-[0015], FIGs. 4a-4b. Segall teaches that scalable video streams are treated "from a systems ***multiplex*** … perspective" in which "the data might often be handled … as distinct hierarchically related streams of content that are coordinated using decoding timestamps or other such mechanisms." SAMSUNG-1006, 3. A POSITA would have understood Segall as teaching multiplexing/demultiplexing of scalable or otherwise hierarchically coded bitstreams, which was common practice before the Critical Date. *See, e.g.*, SAMSUNG-1010, FIG. 12 (depicting an "SVC encoder structure" with a "Multiplex" component that multiplexes an "H.264/AVC compatible base layer bit stream" with an enhancement layer bitstream to generate a "Scalable bit-stream"); SAMSUNG-1018, [0079] (describing a "demultiplexing unit

1010 [that] separates a bitstream for each layer from an input scalable bitstream and outputs a base layer bitstream and an enhancement layer bitstream"), FIG. 10.

184. It would have been obvious and a POSITA would have been motivated to multiplex/demultiplex the base- and enhancement-layer streams in the combination to support transmission of the respective streams over a communication channel, while also facilitating synchronization of the streams by reference to common timing information in the multiplexed signal. A demultiplexer at the decoder also would have been obvious to separate the streams for processing of each layer by respective portions of the decoding device. *See, e.g.*, SAMSUNG-1019, 1 (describing how MPEG standards "define[] a multiple multiplexed structure for combining elementary streams, including coded audio, video and other data streams, and specifies means of representing the timing information needed to replay synchronized sequences in real-time"); SAMSUNG-1018, [0079] ("demultiplexing unit 1010 separates a bitstream for each layer from an input scalable bitstream and outputs a base layer bitstream and an enhancement layer bitstream"), FIG. 10. Multiplexing/demultiplexing the layered streams in the combination also would have been obvious as a predictable application of known techniques to yield predictable results for which a POSITA would have had a reasonable expectation of success, especially since multiplexing and demultiplexing layered bitstreams was commonly performed before the '995 Patent.

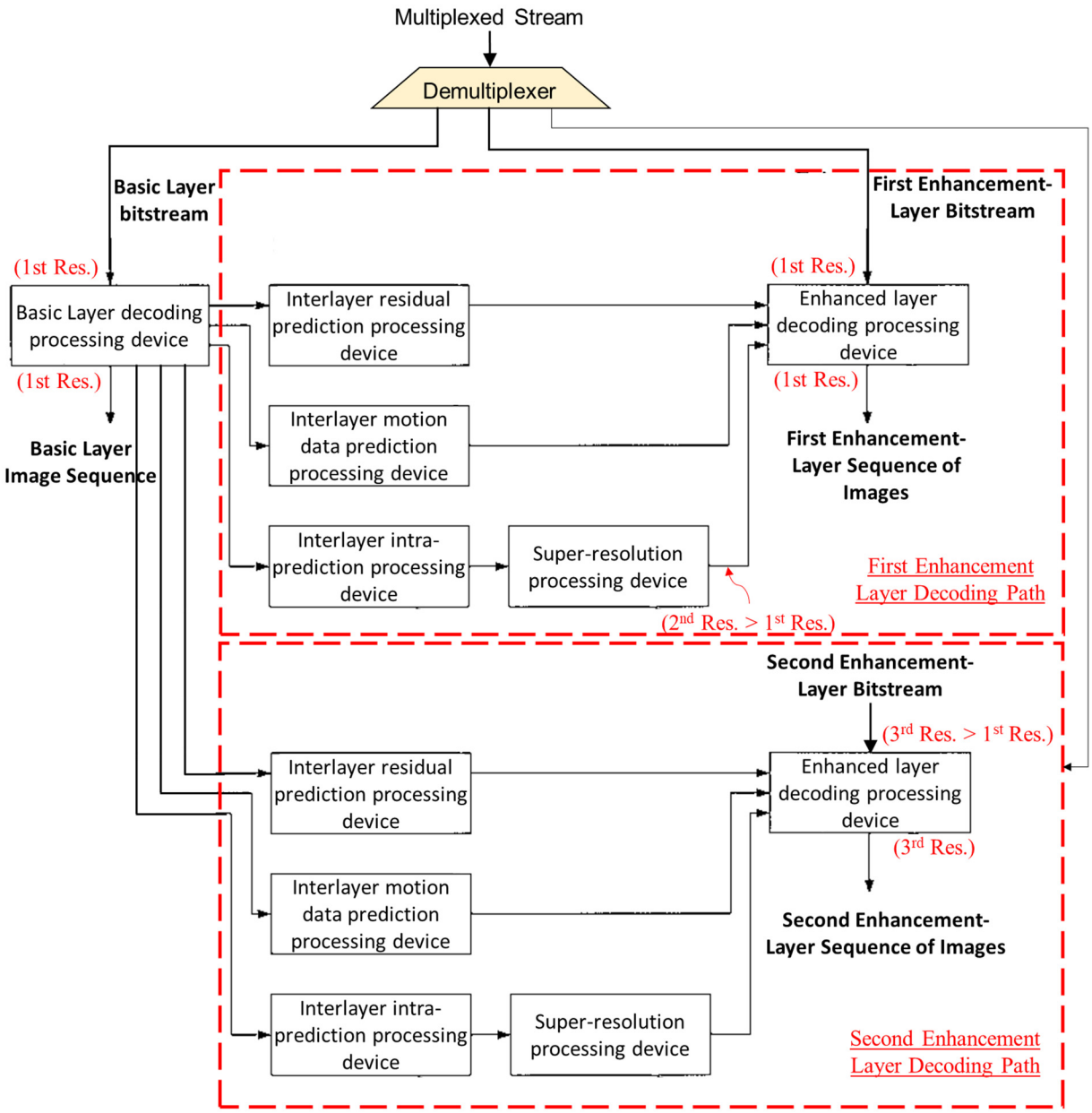

Third Intermediate Illustration of Proposed Combination (Phek-Segall)

4. Obvious based on Martins to Downscale Phek's Super-Resolution Enlarged Reference Pictures

185. It next would have been obvious based on Martins to downscale the super-resolution enhanced reference pictures that Phek's first enhancement layer uses

for prediction to the first (standard) resolution at which the images in the base- and first enhancement layers are encoded and decoded.

186. Phek's decoding path for the first enhancement layer includes "a super-resolution processing device 430 [that] is used to improve the reference picture from the inter-layer intra-prediction processing device 428." SAMSUNG-1005, [0015]. The use of "super-resolution processing … improve[s] encoding efficiency or picture quality by improving the reference frames used for motion detection, motion compensation prediction, and display." *Id.*, [0013].

187. Phek's super-resolution enhancement involves processing of a set of lower-resolution images to generate a super-resolution enlarged image of higher quality and spatial resolution than the individual lower-resolution images. SAMSUNG-1005, [0002] ("Super-resolution processing is a technique for generating high-resolution images from a plurality of low-resolution images."). As described above, however, the base- and first enhancement-layer streams in the combination are both coded at the same spatial resolution. *Supra*, § VIII.A.1. Subjecting reference pictures to super-resolution processing naturally yields enlarged images whose spatial resolution is greater than the resolution of the decoding targets in the first enhancement layer stream. SAMSUNG-1005, FIG. 4b. In this context, it would have been obvious to apply a decimation technique like Martin's to revert Phek's super-resolution enlarged reference picture to the smaller spatial resolution of the base- and first enhancement-layer streams

(while retaining gains in SNR or detail resulting from the super-resolution enhancement). SAMSUNG-1007, § IV; *supra*, § VI.C.

188. Despite this resulting resolution mismatch, a POSITA would have known how to downscale super-resolution images to restore the images to the original resolution of the low-resolution images from which the super-resolution images were generated while still retaining a higher quality and information content than the original low-resolution images. *Supra*, §II.G.4. Martins, for example, describes techniques for decimating a super-resolution image thereby reducing the spatial resolution of the image while maintaining quality enhancements realized by the super-resolution process. SAMSUNG-1007, Abstract ("The algorithm is based on motion-compensated spatial upsampling from multiple images and decimation to the desired format. Depending on the degree of decimation …, the problem addressed is one of restoration … . The aim in restoration is to enhance the decoding quality."), 2 ("In the second step, the super-resolution picture is decimated to the desired format."), 6 ("In this section, we state a downsampling scheme applying quality based spatial filtering of the super-resolution pictures."), 1 ("The primary goal of this paper is to improve MPEG-2 decoding, or rather to postprocess the decoded sequence re-using information in the MPEG-2 bitstream to obtain a sequence of higher-fidelity, especially with regard to artifacts. The resulting output is a sequence in the same format as the directly decoded one[] … .").

189. Multiple reasons would have prompted a POSITA to follow Martins' suggestion to downscale super-resolution images back to the original (standard) resolution such that the reference pictures that Phek's first enhancement layer uses for inter-layer prediction would be downscaled super-resolution images.[10]

190. First, a POSITA would have sought to downscale Phek's super-resolution reference images to reduce the computational expense and complexity of inter-layer predictions of images in the first enhancement layer. A POSITA would have known before the '995 Patent that decoding from higher-resolution reference pictures generally require more processing time/resources and consumes more power than decoding with lower-resolution reference images—i.e., a fact that explains multiple prior art proposals for reducing reference image size before the Critical Date. A POSITA would have

[10] In the combination, it would have been obvious for the super-resolution processor 430 in the first enhancement layer to generate super-resolution images according to the techniques described in either Phek or Martins. Both references' super-resolution processes produce images of higher quality and higher resolution than the set of lower-resolution input images. Each process likewise meets the claimed requirements for super-resolution enlargement. Post super-resolution downscaling can then be performed in any suitable manner including, for example, using a decimation process like that described in Martins.

sought to downscale Phek's super-resolution reference images to obtain similar benefits. *See, e.g.*, SAMSUNG-1021, [0003] ("a desirable goal is to minimize the complexity of the decoder while maintaining the video quality"), [0011], ("Since the embedded resizing may enable both the inverse discrete transform (IDCT) and motion compensation (MC) to be performed at a lower resolution, the overall complexity of the decoding is reduced."), [0016] ("enable the motion compensation to be performed at a reduced resolution"), [0017]-[0029], Abstract, FIGS. 2-4; SAMSUNG-1020, Abstract ("downscaling the compressed video bit stream before the bit stream is decoded, which results in a considerable decrease in decoding complexity requiring less memory and lower CPU power usage"), [0002], [0026], FIG. 4; SAMSUNG-1013, [0006] ("since a large amount of processing is required to perform the inter-frame processing of the super-resolution processing, it is desired to reduce the amount of processing"), [0002]-[0003], [0026]-[0027].

191. Second, a POSITA would have sought to downscale Phek's super-resolution reference images to reduce the amount of memory required to buffer or otherwise store the reference images for decoding. Before being applied in a prediction process such as motion compensation and estimation, reference images are commonly stored in a frame buffer where they are made available to the decoder for prediction of a downstream image. SAMSUNG-1008, FIG. 2 (buffers 213, 215). The size of the frame buffer is proportional to the size of the reference images and it would have been

obvious that the buffer size could be reduced by reducing the resolution of the reference images before they are stored in the buffer. Indeed, frame buffer size was a well-known concern in the art before the '995 patent, especially since larger frame buffers generally require more expensive hardware, more processing, and more power consumption to maintain than smaller frame buffers. SAMSUNG-1009, 3:21-28 ("Accordingly, temporary storage elements are required to buffer the data before display. However, the need for a relatively large decoder input buffer increases the cost of manufacturing the decoder. This is undesirable since the decoders are mass-marketed items that must be produced at the lowest possible cost.").

192. Third, a POSITA would have sought to downscale Phek's super-resolution reference images to separately allow the base-layer stream to be outputted for display with an improved picture quality at the first (standard) spatial resolution that does not require a higher resolution, more expensive display device. Phek expressly notes that super-resolution images are not only usable as reference images in a decoding loop but can also be outputted for display. SAMSUNG-1005, [0002], [0012]-[0013]. Martins likewise describes how decimation can be applied to "obtain a sequence of higher fidelity … in the same format as the directly decoded one." SAMSUNG-1007, 1. Downscaling Phek's super-resolution images would have allowed for rendering of those images at a display device of lower resolution or even on devices that support higher resolutions during periods of time when the decoder is unable to obtain

enhancement layer data due to degraded channel conditions or the like. SAMSUNG-1006, 1.

193. Fourth, downscaling the super-resolution picture enlarged pictures in the combination would have been obvious as a predictable application of known techniques to yield predictable results for which a POSITA would have had a reasonable expectation of success given the known use of decimation and downscaling techniques on super-resolution images before the '995 Patent.

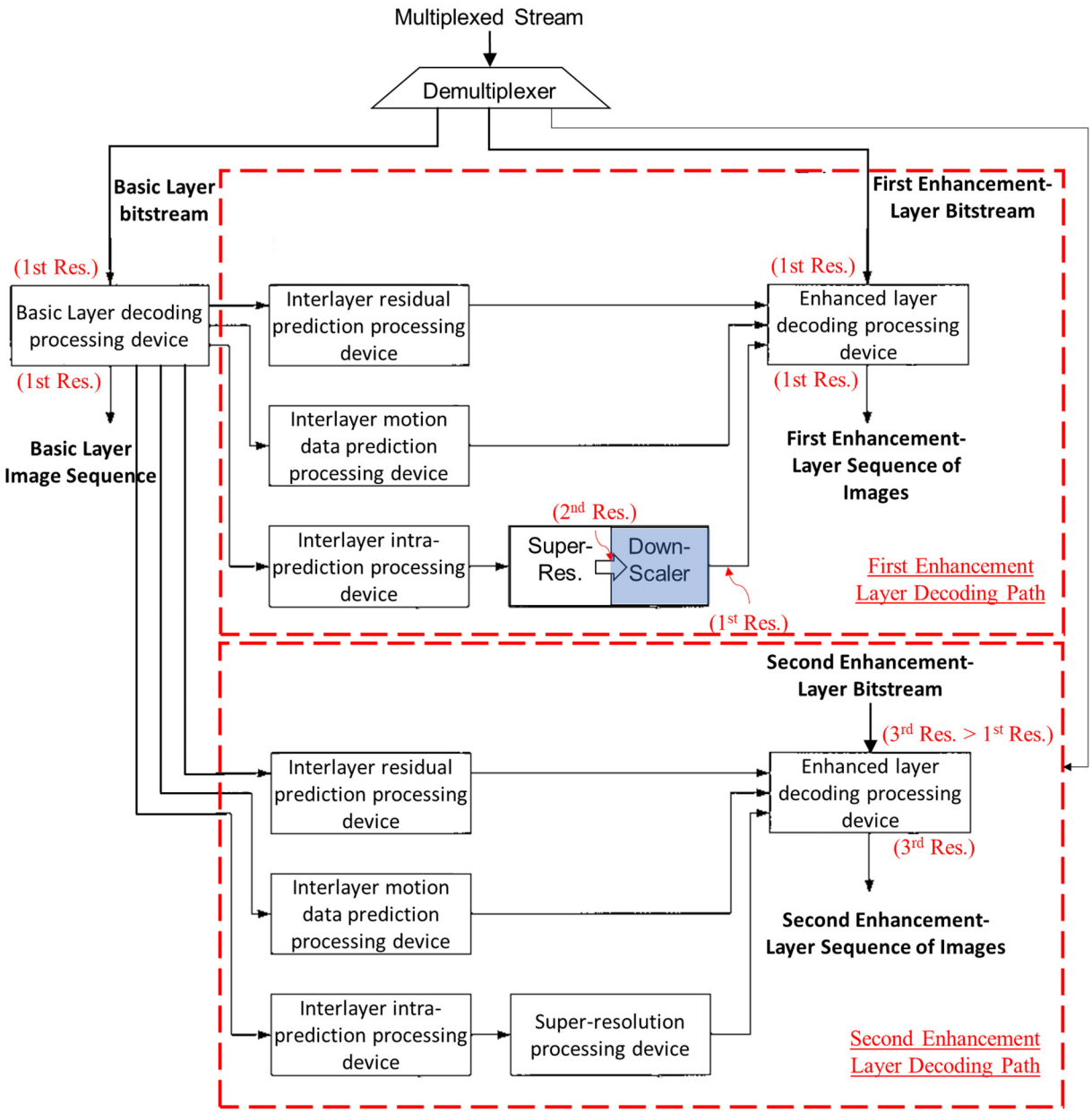

Fourth Intermediate Illustration of Proposed Combination (Phek-Segall-Martins)

5. Obvious based on He to Selectively Apply Phek's/Martin's Super-Resolution (and Downscaling) Loop Filter

194. A POSITA would have next found it obvious based on He to implement Phek's first enhancement layer decoder in the combination to selectively enable or

disable super-resolution processing and downscaling of reference pictures in the first enhancement layer of the Phek-Segall-Martins-He combination.

195. As previously discussed, the teachings of Phek in view of Martins render obvious techniques for performing super-resolution processing and downscaling of reference images used for inter-layer prediction of images in the first enhancement layer. SAMSUNG-1005, [0011]-[0015], FIGS. 3a-3b, 4a-4b; SAMSUNG-1007, 1-2, 6; *supra*, § VIII.A.4.

196. The super-resolution and downscaling operations performed on reference pictures in the first enhancement layer decoding path form a type of "loop filter," which I refer to as a "super-resolution and downscaling loop filter" (or simply an "SR-D filter"). Like other loop filters known in the art, the Phek-Segall-Martins-He SR-D loop filter enhances decoded frames before they are used as references for the prediction of frames in the first enhancement layer. *Supra*, § II.F; *see, e.g.*, SAMSUNG-1008, [0006] (describing a "deblocking filter" as an "in-loop filter as part of the standard (e.g., H.264/AVC)"); SAMSUNG-1015, [0068] ("[W]e propose utilizing a succession of filters on coded pictures to reduce the amount of coding artifacts over video frames. The filters are placed in the coding loop (in-loop), so the filtered frames are used as referenced frames for motion compensation of subsequent coded frames. At least one of the filters includes, for example, a deblocking filter, a de-ringing filter, a de-noising filter, a signal estimation filter, a linear filter, and/or a non-linear filter."); SAMSUNG-

1011, [0022] ("The purpose of applying fidelity enhancement methods to the video encoders and decoders is to enhance fidelity by canceling errors; examples of the fidelity enhancement method include, but are not limited to, Kalman filtering, noise reduction, deblurring, Wiener filtering, regression, regularization, and various discrepancy modeling such as DC offset (zero order), weighted prediction (first order, e.g. ax+b), spatial prediction, for example, higher order prediction (e.g. av2+bv+c), line fitting (ax+b, ay+b), curve fitting (av2+bv+c, ay2+by+c), plane fitting (ax+by+c), and surface fitting (ax2+bxy+cy2+dx+ey+f)."), [0023], FIGS. 2-5 (depicting various placements of the fidelity-enhancement filters in-loop); SAMSUNG-1022, pp. 10-11.

197. Phek does not explicitly disclose criteria or conditions for the use of super-resolution processing on reference pictures, nor does Martins explain when SR-D filtering should be applied for loop filtering. As discussed above, however, He describes known costs attendant to loop filtering, which may or may not be justified depending on factors such as the degree of improvement in the decoded image quality and compression that would be realized by use of the loop filter, power consumption, and the like. *Supra*, § VI.D. For example, He explains that an in-loop "deblocking filter[] … consumes a significant amount of power and processing cycles" and "[g]enerally speaking, the entire deblocking filter … consumes approximately 8% of the computations at the encoder and approximately 35% at the decoder for H.264/AVC." SAMSUNG-1008, [0006]. "Disabling the entire deblocking filter, therefore, provides a

significant reduction of power and processing complexity, especially in the decoder." *Id.* To maintain a "desired tradeoff between video quality and complexity reduction," He discloses control signals that allow a decoder to selectively enable or disable the loop filter. *Id.*, [0069].

198. In some examples, the determination whether to enable/disable in-loop deblock filtering is based on power considerations and content characteristics. SAMSUNG-1008, [0028], [0031], [0037], [0076]. For example, "[t]he content of the video information is examined to determine a characteristic indicative of a relative amount of content complexity and/or a relative amount of motion of the video information" and "[i]f the video information content exhibits a relatively low amount of motion or is relatively simple content (e.g., not complex), then the deblocking filter 131 may be fully disabled without significant degradation in visual quality." *Id.*, [0028]. Likewise, He describes a "power saving factor (PSF)" that reflects a cost of power consumption of deblock filtering and that the coder uses to determine whether to perform deblock filtering on a given slice or frame. *Id.*, [0037].

199. A POSITA would have found it obvious and would have been motivated to apply He's suggestion for selective in-loop filtering to the Phek-Segall-Martins-He combination to achieve benefits like those expressly described in He—including to reduce the power consumption and computational complexity of decoding frames in at least the first enhancement layer. SAMSUNG-1008, [0028], [0031], [0037], [0076],

[0069]. In the combination, and based on He's teaching, control flags in frame or slice header(s) can predictably indicate whether an in-loop SR-D filter should be applied when decoding a given frame or slice in the first enhancement layer. *Id.*

200. Although He describes selective loop filtering in the context of "deblocking" filters, He's teachings are readily and obviously applicable to other types of loop filters including SR-D filtering. Indeed, the same concerns that motivated He's use of selective "deblocking"-type loop-filters—including computational complexity and power consumption concerns—are similarly, if not more, applicable to SR-D filtering especially since SR-D filtering involves processing of more images and imposes an even greater computational burden than traditional deblocking filters. SAMSUNG-1007, 6 (describing need to "keep the algorithmic complexity down"); SAMSUNG-1012, 13 (describing importance implementing "an efficient [super-resolution] algorithm that reduces the computational cost").

201. A POSITA also would have known that super-resolution processing is most effective to improve the quality of an image when "some relative scene motions … exist from frame to frame." SAMSUNG-1011, 2. But in the absence of motion, or if the lower-resolution images from which the super-resolution image is constructed are merely "shifted by integer [pixel] units," then "no new information can be used to reconstruct" a super-resolution image and super-resolution processing will be less effective. SAMSUNG-1011, 2. Accordingly, when super-resolution processing does

not improve the reference picture significantly, imposes an unacceptable increase in computational load, and/or when the power consumption required for super-resolution processing is substantial, it would have been obvious to bypass SR-D filtering based on He's teachings for selective in-loop filtering. For example, consistent with He's teaching to use an unfiltered reference picture when loop filtering is disabled, it would have been obvious for the first enhancement layer decoder in the combination to use a decoded base layer-frame that has not been SR-D filtered for inter-layer prediction of a corresponding frame in the first enhancement layer when the SR-D filter is disabled. *Id.*; SAMSUNG-1008, [0026] ("the unfiltered reconstructed frame information URF is passed as the reconstructed information RF" when loop filtering is disabled), FIG. 2.

202. The fact that selective loop filtering was standard in video coders before the '995 Patent and that He specifically describes such techniques in a layered coding system like Phek's underscores the obviousness of the combination and that a POSITA would have had a reasonable expectation of success implementing selective SR-D loop filtering in the combination. *KSR*, 550 U.S. at 417.

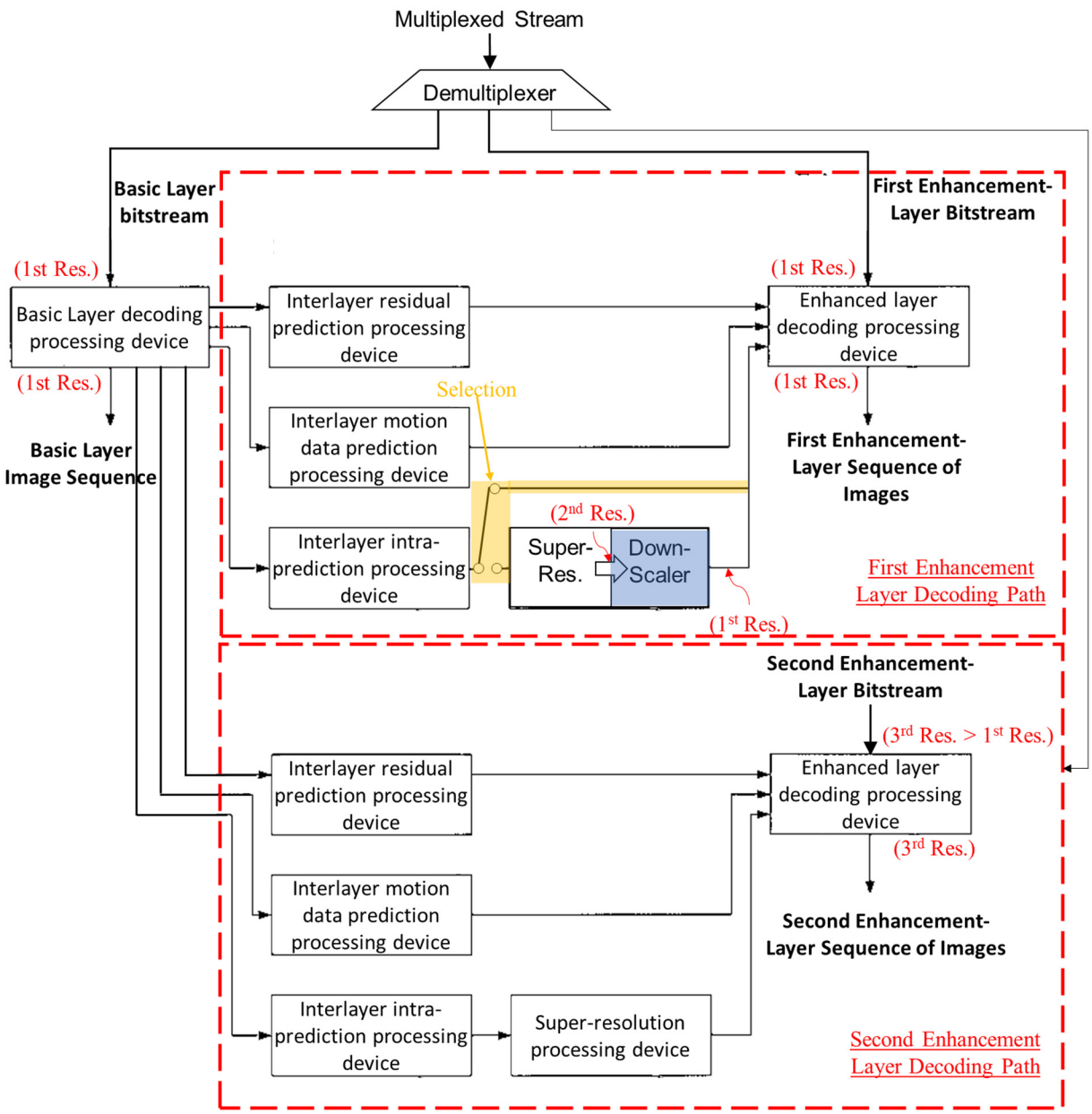

Illustration of Phek-Segall-Martins-He Combination

B. Relevance of the Phek-Segall-Martins-He Combination to the Claims

203. Based on my review, the combined teachings of Phek in view of Segall, Martins, and He as described in the preceding section would have rendered each of claims 2-4 and 11 of the '995 Patent obvious before the Critical Date.

1. Claim 2

[2.P] A moving picture decoding system comprising:

204. To the extent the preamble is limiting, the Phek-Segall-Martins-He combination renders obvious [2.P]. For example, with respect to FIG. 4b, Phek describes a "decoding device (decoder)" in an "[i]nterlayer predictive" coding system. SAMSUNG-1005, [0014], FIG. 4b; *see also id.*, [0011]-[0015], FIGs. 3a-3b, 4a. In a decoder, an "image sequence is reconstructed from the encoded video bitstream." SAMSUNG-1005, [0012].

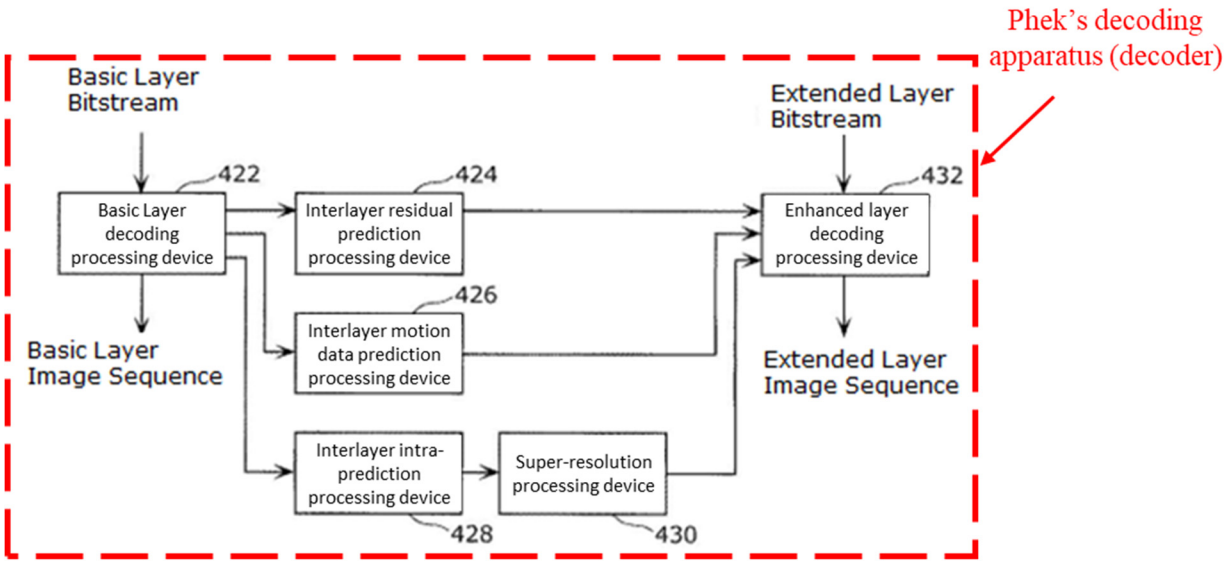

SAMSUNG-1005, FIG. 4b (modified and annotated).

205. As shown in FIG. 4b, Phek's decoding device includes (i) a basic layer decoding processing device 422 that processes a basic-layer bitstream to decode a basic layer image sequence and (ii) an enhanced-layer decoding processing device 432 that processes an enhancement-layer bitstream to decode an enhancement-layer image sequence. SAMSUNG-1005, [0014]-[0015], FIG. 4b. The decoding device mirrors operations of the encoding device in "us[ing] interlayer prediction to reduce redundancy between the enhanced layer and the basic layer, thereby improving encoding efficiency compared to encoding performed using only an enhanced layer." *Id.*, [0014]; *see also supra*, §§VI.A.

[2.1] a demultiplexer configured to work on a sequence of input encoded bits to implement a process for a prescribed demultiplexing to output at least a first and a second sequence of encoded bits;

206. The Phek-Segall-Martins-He combination renders obvious [2.1]. For example, Phek describes a "reverse multiplexer 202" (also referred to as an "inverse multiplexer" or a "demuxer") that receives an "input D252 [] composed of video and/or audio sources, etc." and that processes the input D252 to "separate[]" … "the video source … from the other sources." SAMSUNG-1005, [0010], FIG. 2.

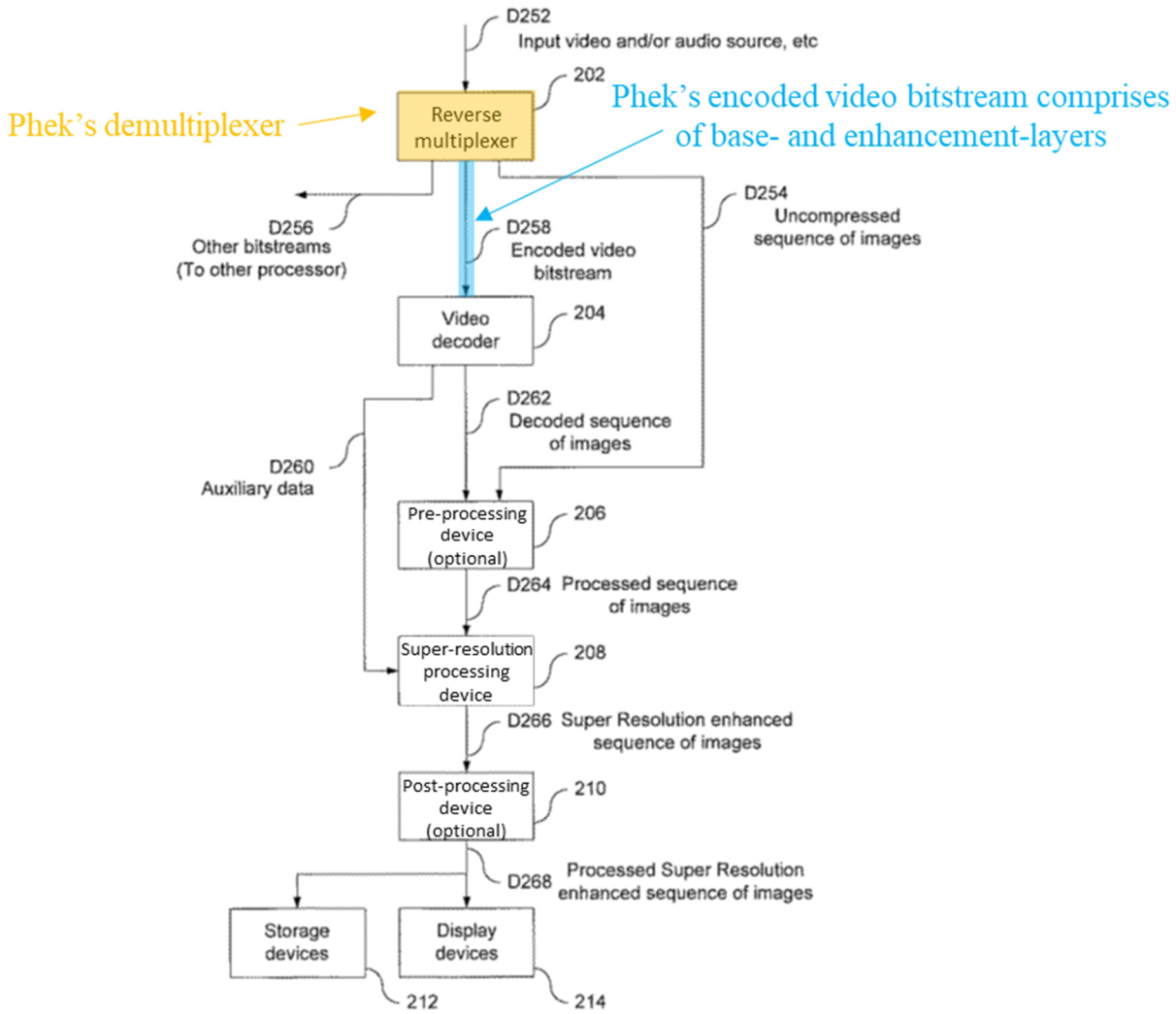

Fig. 2

SAMSUNG-1005, FIG. 2 (modified and annotated).

207. Further, Phek discloses that the encoder (FIG. 4a) encodes separate bitstreams for the basic- and enhancement layers, while the decoder (FIG. 4b) processes the basic-layer bitstream and the enhancement-layer bitstream in respective decoding paths. SAMSUNG-1005, [0014]-[0015], FIGS. 4a-4b. A POSITA thus would have understood and it would have been obvious that when implementing layered

hierarchical coding, Phek's encoded video bitstream D258 from FIG. 2 would include both the basic- and enhancement-layer bitstreams as shown in FIGs. 4a-4b. Phek does not expressly disclose that the basic- and enhancement-layer bitstreams are multiplexed, however.

208. Segall teaches that scalable video streams are treated "from a systems ***multiplex*** … perspective" in which "the data might often be handled … as distinct hierarchically related streams of content that are coordinated using decoding timestamps or other such mechanisms." SAMSUNG-1006, 3. As referenced in Segall, a POSITA would have known that scalable and hierarchical video bitstreams are commonly multiplexed into a composite signal for transmission and demultiplexed upon receipt at the decoder side. *See, e.g.*, SAMSUNG-1010, FIG. 12 (depicting an "SVC encoder structure" with a "Multiplex" component that multiplexes an "H.264/AVC compatible base layer bit stream" with an enhancement layer bitstream to generate a "Scalable bit-stream"); SAMSUNG-1018, [0079] (describing a "demultiplexing unit 1010 [that] separates a bitstream for each layer from an input scalable bitstream and outputs a base layer bitstream and an enhancement layer bitstream"), FIG. 10; *supra*, §VIII.A.3.

209. In the combination, Phek's encoding device from FIG. 4a multiplexes the respective bitstreams from the basic- and (first) enhancement layers into a single composite signal for transmission, and further multiplexes a second enhancement-layer

bitstream into the composite signal when a second enhancement layer is provided as described above. *Supra*, §VIII.A.2-iii. A demultiplexer akin to Phek's demultiplexer 202 implements a process for a prescribed demultiplexing of the composite signal and outputs the respective bitstreams for processing by corresponding layers of the decoding device. The basic layer bitstream constitutes a "***first sequence of encoded bits***" while the (first) enhancement layer bitstream constitutes a "***second sequence of encoded bits***." *Id.*

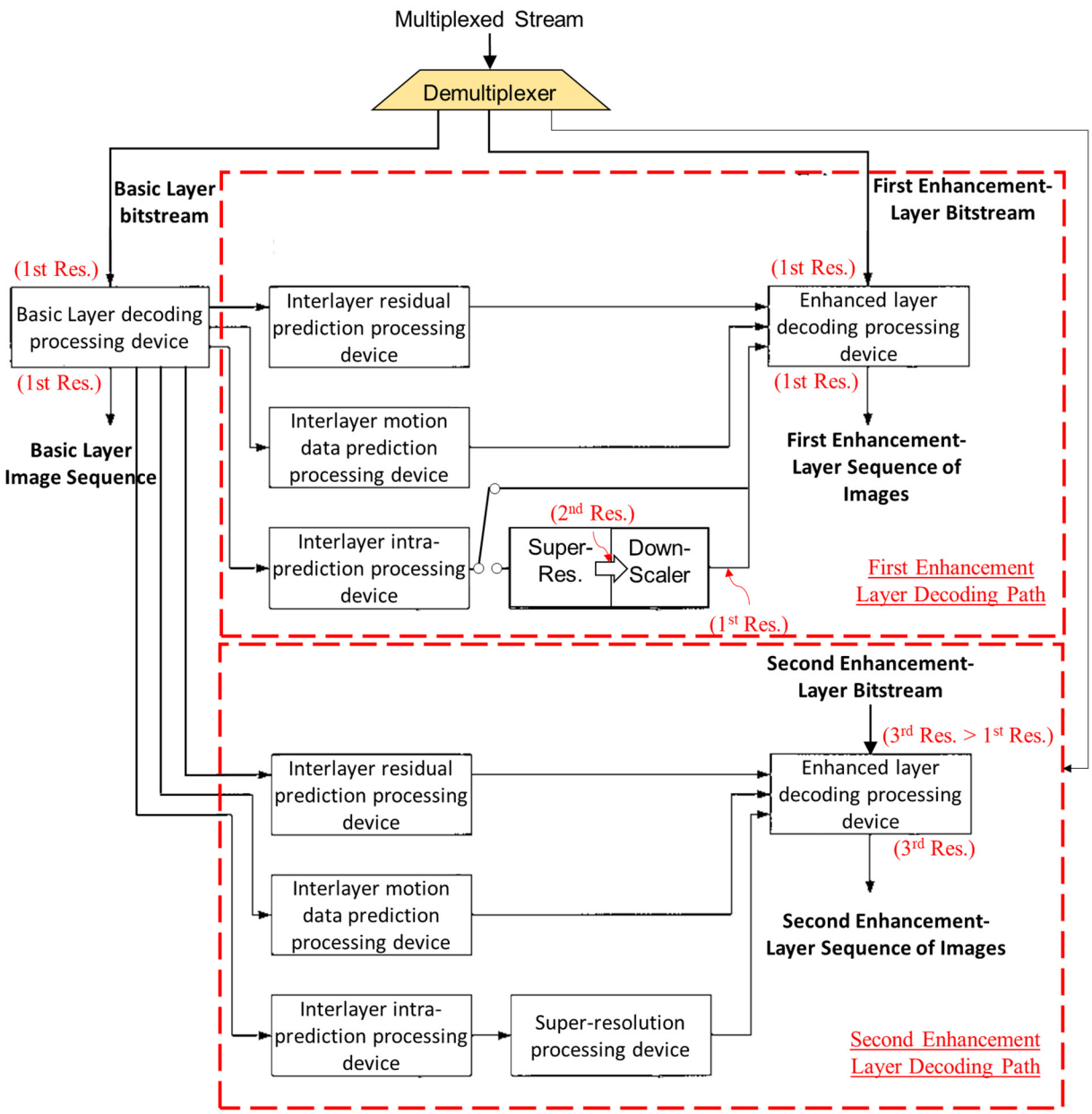

Illustration of Phek-Segall-Martins-He Combination

[2.2] a first decoder configured to acquire the first sequence of encoded bits obtained with a standard resolution at the demultiplexer to implement thereon a process for a prescribed first decoding to create a sequence of decoded pictures with a standard resolution;

210. The Phek-Segall-Martins-He combination renders obvious [2.2]. For example, with respect to FIG. 4B, Phek discloses a decoding device for hierarchically encoded video streams configured to decode image sequences from each of a basic-layer bitstream and an enhancement-layer bitstream. SAMSUNG-1005, [0014]-[0015], FIG. 4b. "In the decoder, the basic layer bitstream is decoded using a basic layer decoding processing device 422." *Id.*, [0015].

211. In the combination, consistent with Phek's and Segall's teachings, the basic layer decoding processing device 422 (***first decoder***) acquires the basic-layer bitstream (***first sequence of encoded bits***) from the demultiplexer to implement thereon a process for a prescribed first decoding to create a basic layer image sequence (***sequence of decoded pictures***). *Supra*, § III.A.5. As explained above in the combination overview, the basic layer video stream is encoded and decoded with a first spatial resolution (***standard resolution***). *Supra*, § VIII.A.1. A POSITA would have understood that the decoding and super-resolution processes described throughout Phek are performed according to defined coding techniques and according to coding modes specified in the bitstreams. The processes described in Phek and the provided in the proposed Phek-Segall-Martins-He combination are thus "prescribed" at least to the same extent disclosed in the specification of the '995 Patent itself.

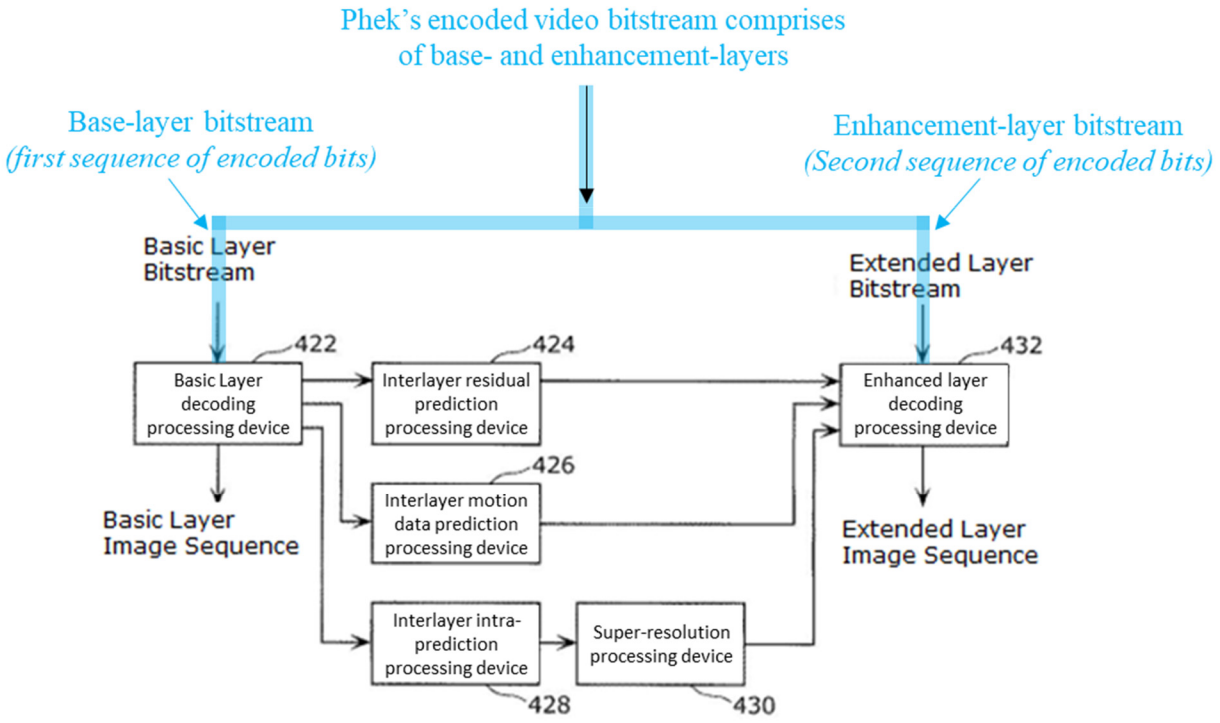

SAMSUNG-1005, FIG. 4b (modified and annotated).

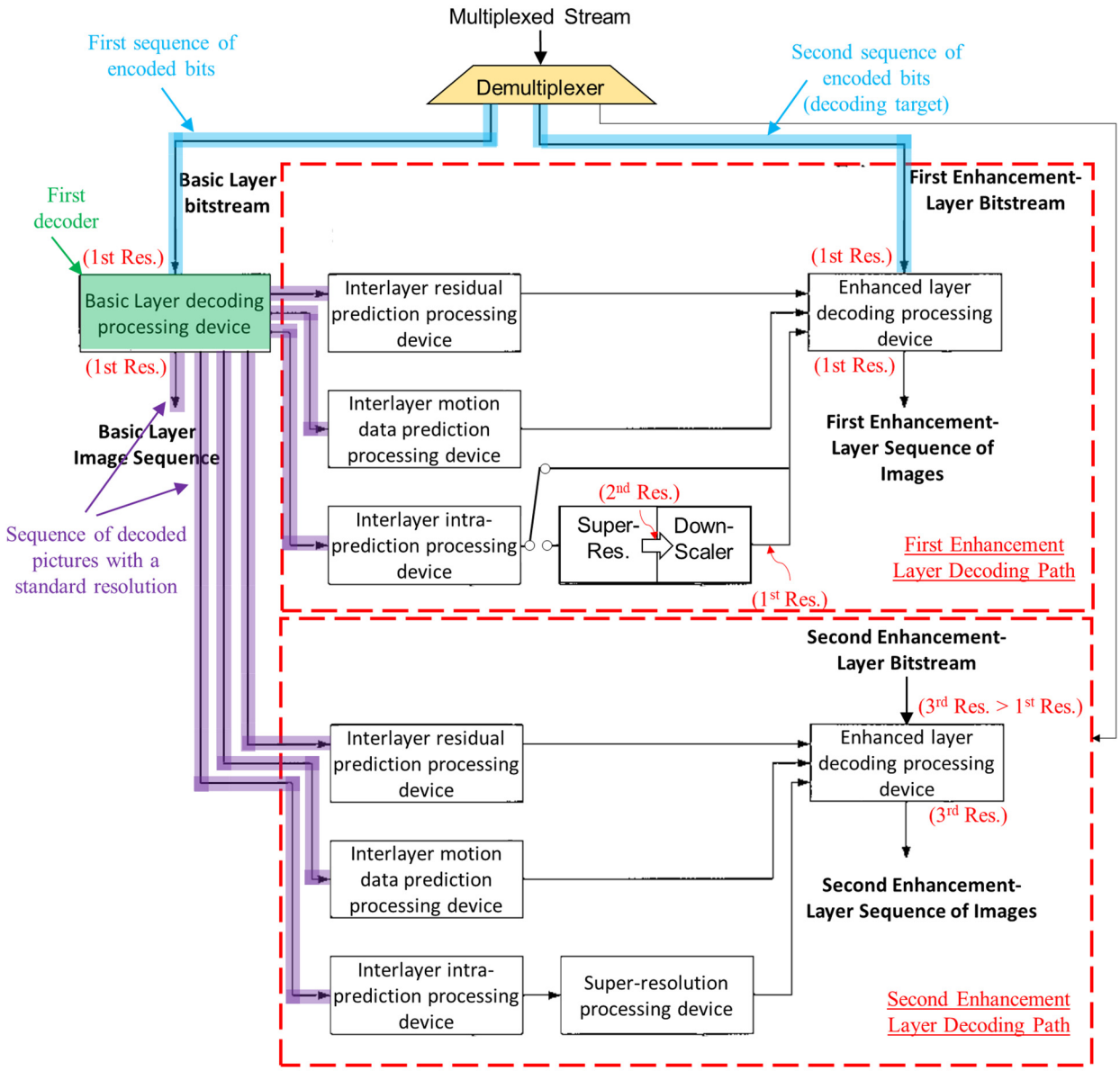

Illustration of Phek-Segall-Martins-He Combination

[2.3] a first super-resolution enlarger configured to acquire the sequence of decoded pictures created with a standard resolution at the first decoder to work on the sequence of decoded pictures to implement an interpolation of pixels with a first enlargement to create a sequence of super-resolution enlarged decoded pictures with a first resolution higher than a standard resolution;

212. The Phek-Segall-Martins-He combination renders obvious [2.3]. For example, with respect to FIG. 4B, Phek describes a "super-resolution processing device

430 [that] is used to improve the reference picture from the inter-layer intra-prediction processing device 428" and that "performs residual interpolation." SAMSUNG-1005, [0015], FIG. 4b. Phek explains that "super-resolution processing … improve[s] encoding efficiency or picture quality by improving the reference frames used for motion detection, motion compensation prediction, and display." SAMSUNG-1005, [0013], [0014] ("uses an … a reconstructed image of the basic layer as an additional reference image for encoding the image of the enhanced layer"). The super-resolution processing device 430 thus constitutes a "***first super-resolution enlarger***" and is configured to acquire the basic layer image sequence (***sequence of decoded pictures created with a standard resolution***) at the basic layer decoding processing device 422 (***first decoder***) to work on the basic layer image sequence to implement an interpolation of pixels with a first enlargement to create a sequence of "***super-resolution enlarged decoded pictures with a first resolution higher than a standard resolution***."

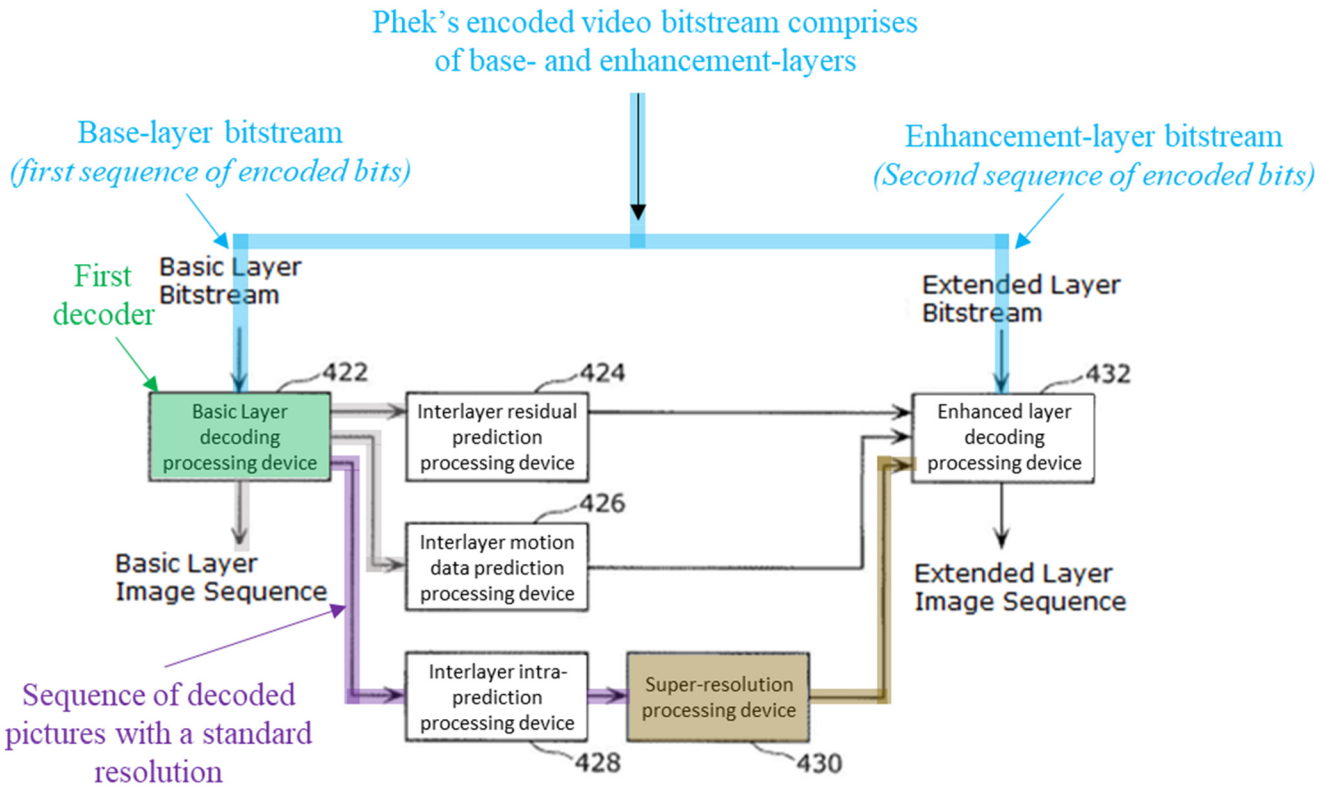

SAMSUNG-1005, FIG. 4b (annotated and modified).

213. In more detail, Phek's super-resolution processing creates a super-resolution enlarged image from a sequence of lower-resolution images. The super-resolution enlarged image has both improved quality (e.g., more resolvable detail and higher SNR) and a higher spatial resolution (e.g., more pixels) than any of the individual lower-resolution images used as input to the super-resolution processing. SAMSUNG-1005, [0002] ("Super-resolution processing is a technique for generating high-resolution images from a plurality of low-resolution images. This technique can be used … to improve the resolution and quality of the inputted image sequences … ."); *supra*, §II.A.C.

214. In FIG. 1a, Phek illustrates "a block diagram showing the processing devices (functional blocks) in the super-resolution processing device." SAMSUNG-1005, [0016]. In the super-resolution processing device, an "interpolation processing device 110 interpolates frames subject to super-resolution" using "[w]ell-known interpolation methods" such as "bilinear interpolation, bicubic interpolation, and Lanczos interpolation." *Id.* Moreover, in Phek, there is a disclosure of "residual interpolation to prevent grid artifacts." *Id.*, [0006]. This is achieved "by adding smoothing constraints to high-resolution estimated images," thereby resulting in the generation of "sharper images." *Id.*, [0006], [0008].

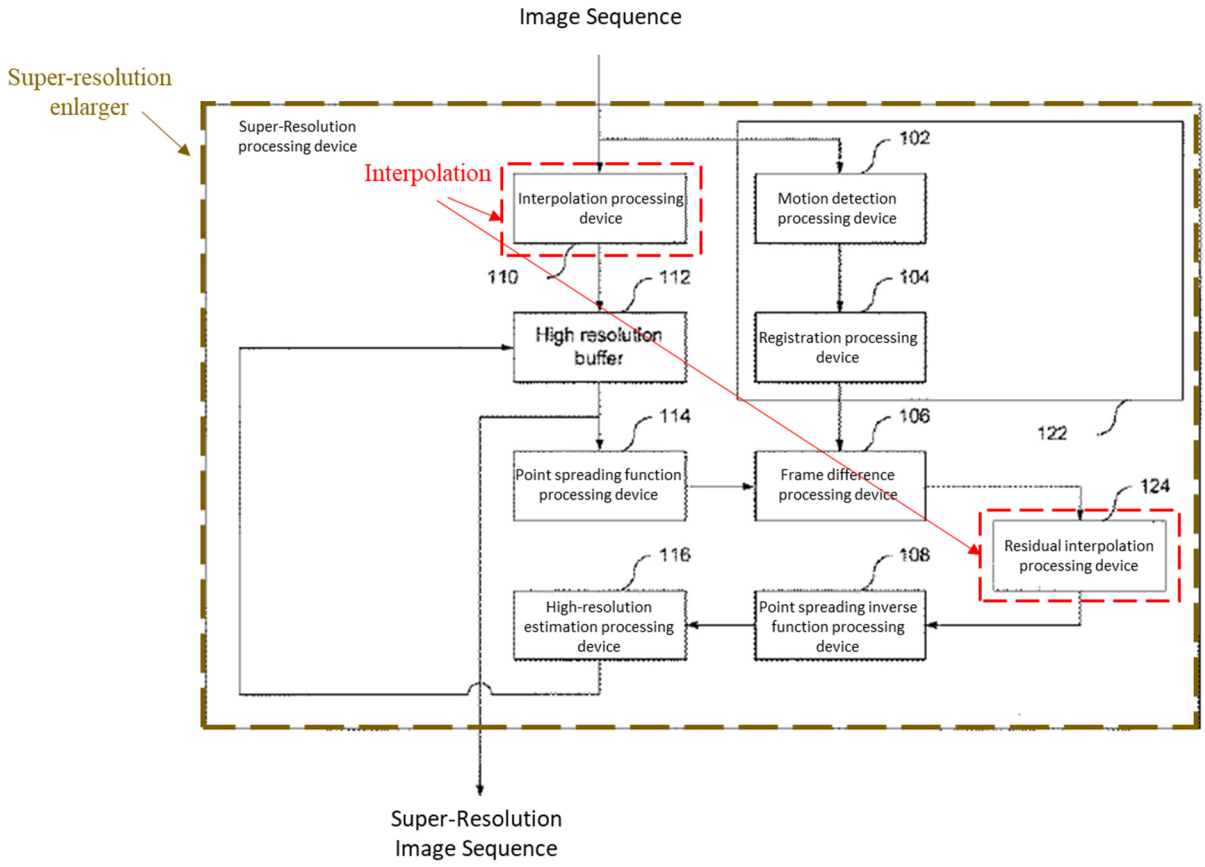

Fig. 1a

SAMSUNG-1005, FIG. 1a (modified and annotated); *see also id.*, FIG. 1b.

215. Martins also discloses super-resolution processing and enlargement techniques that would have been obvious to apply additionally or as an alternative to Phek's super-resolution algorithm in the context of the Phek-Segall-Martins-He combination. *Supra*, §§ VI.C, VIII.A.4. For example, in FIG. 2, Martins illustrates a super-resolution enlarger that enlarges an image using "spatial interpolation". SAMSUNG-1007, 5 and FIG. 2. Martins discloses an algorithm by which "[t]he quality and spatial resolution of video can be improved by combining multiple pictures to form a single super-resolution picture." *Id.*, Abstract. "The superresolution pictures obtained by the algorithm are of much higher visual quality and have lower [mean-squared error] than superresolution pictures obtained by simple spatial interpolation." *Id.* "The algorithm is based on motion-compensated spatial upsampling from multiple images and decimation to the desired format." *Id.*

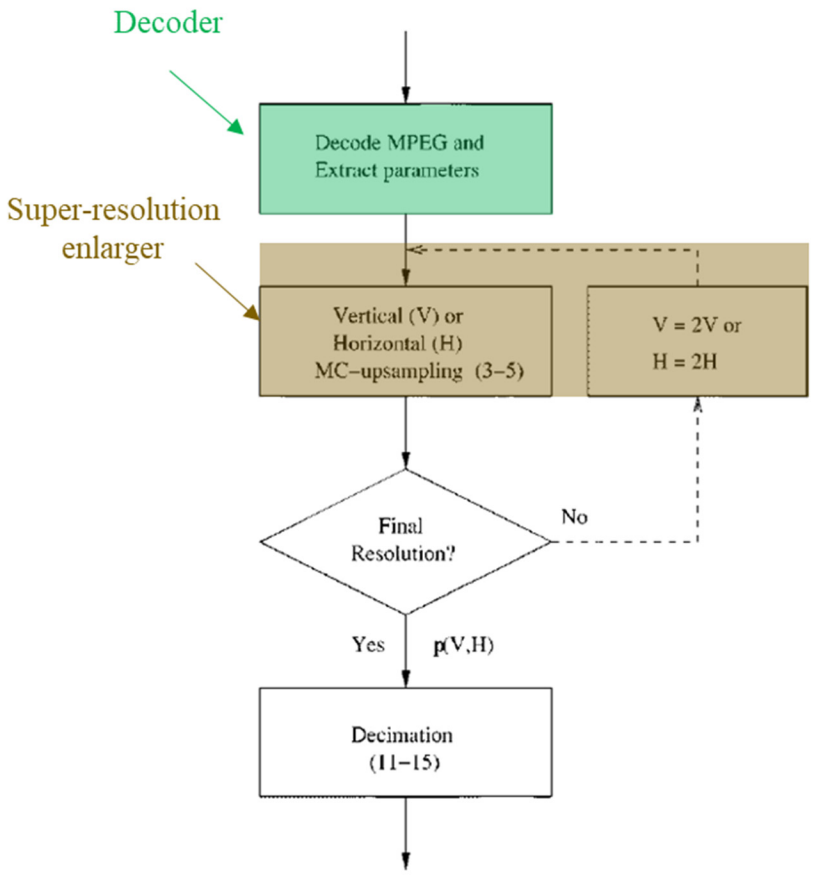

Fig. 2. Overview block diagram. MC upsampling alternates between doubling the resolution vertically and horizontally. Then final step is decimation to the desired format. Equation numbers are given in (). Dashed line marks control flow.

SAMSUNG-1007, FIG. 2 (annotated).

216. As illustrated below, the super-resolution processor in the first enhancement layer decoding path of the Phek-Segall-Martins-He decoding device corresponds to the recited "***first super-resolution enlarger***":

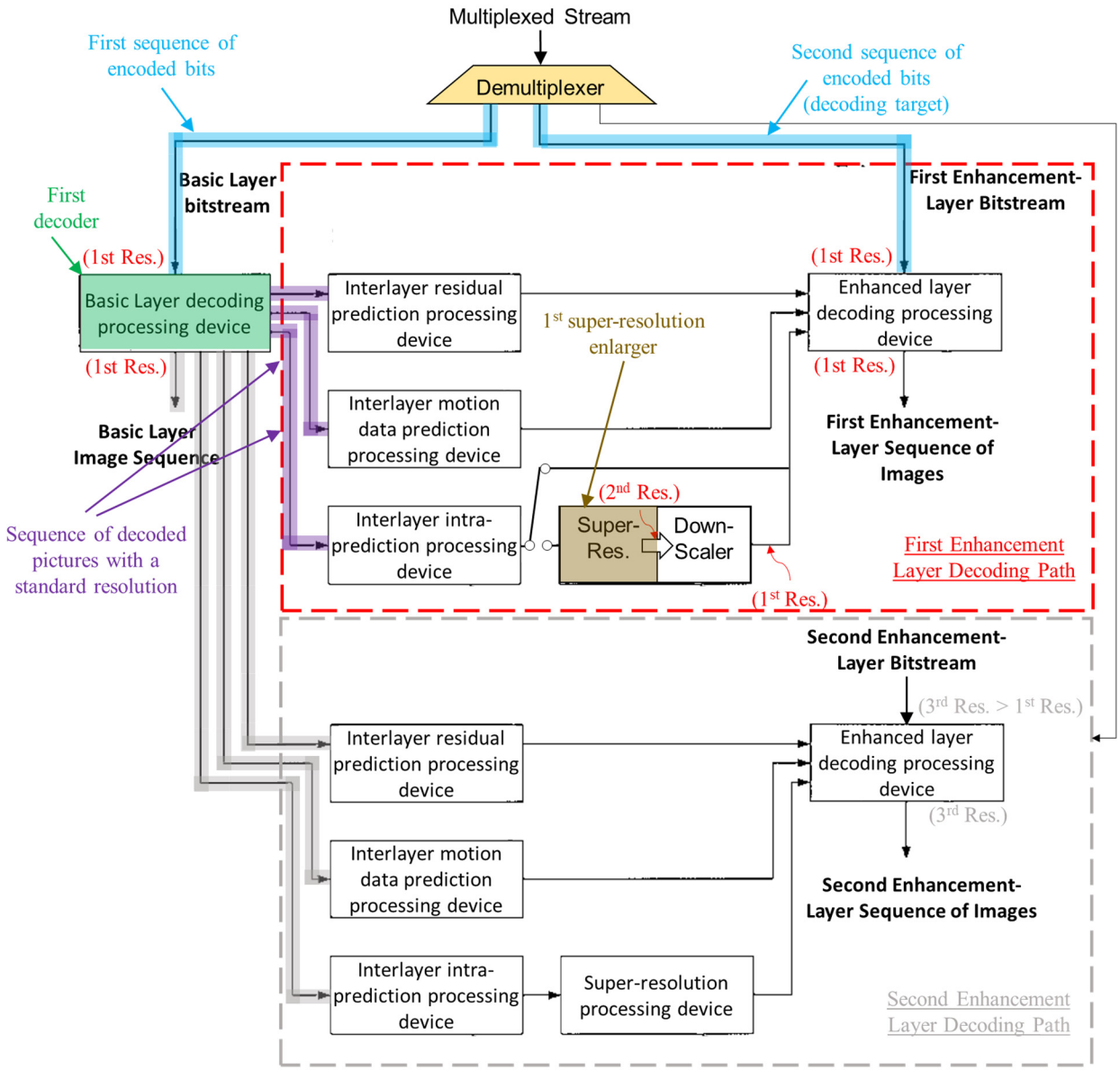

Illustration of Phek-Segall-Martins-He Combination

Supra §VIII.A.4.

[2.4] a first resolution converter configured to acquire the sequence of super-resolution enlarged decoded pictures created at the first super-resolution enlarger to work on the sequence of super-resolution enlarged decoded pictures to implement a process for a prescribed resolution conversion to

create a sequence of super-resolution decoded pictures with a standard resolution;

217. The Phek-Segall-Martins-He combination renders obvious [2.4]. As discussed above, it would have been obvious to apply a decimation technique like Martins' to the sequence of super-resolution enlarged decoded pictures generated by the first super-resolution enlarger, thereby reducing the size (spatial resolution) of the super-resolution enlarged reference pictures to the first (standard) resolution of the basic- and enhanced- layer pictures. SAMSUNG-1007, § IV; *supra*, §§ VI.C, VIII.A.4.

218. For example, FIG. 2 depicts operations in Martins' picture enhancement process, which specifically includes a "decimation" operation that downscales the super-resolution enlarged image to a lower spatial resolution. In other words, "the super-resolution picture is decimated to the desired format." SAMSUNG-1007, Abstract, 2; *see also id.*, 1 (""obtain a sequence of higher fidelity … in the same format as the directly decoded one"), 3, 9, §IV ("DECIMATION").

219. Martins teaches that different "degree[s] of decimation" can be applied depending on the context in which the system is operated, e.g. to perform image "restoration, chrominance upsampling, deinterlacing, or resolution enhancement[] …" SAMSUNG-1007, 2. Image restoration enhances decoding quality without changing the size of the restored image. *Id.*; SAMSUNG-1011, 2 ("does not change the size").

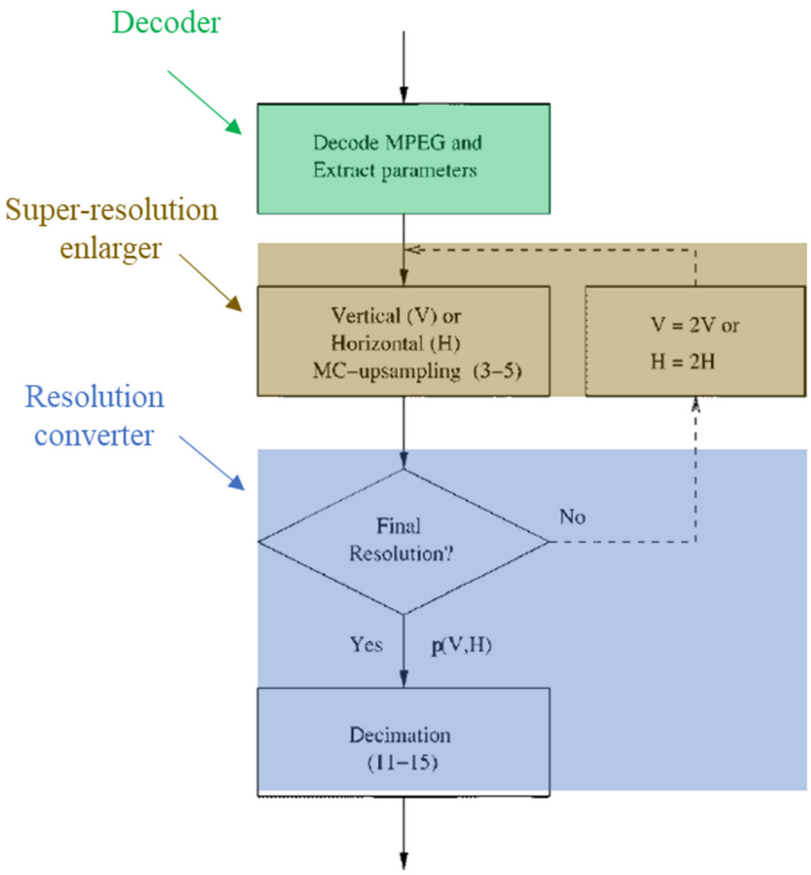

Fig. 2. Overview block diagram. MC upsampling alternates between doubling the resolution vertically and horizontally. Then final step is decimation to the desired format. Equation numbers are given in (). Dashed line marks control flow.

SAMSUNG-1007, FIG. 2 (annotated); §IV Decimation

220. Through FIGs. 11-12, Martins illustrates results of their super-resolution and decimation enhancement techniques. SAMSUNG-1007, 8-9. In FIG. 11, Martins illustrates "the result of using simple upsampling of a directly decoded sequence." *Id.*, 8-9. FIG. 12, by contrast, shows "the results of our enhancement to progressive SDTV … images[] … ." *Id.*, 8-9.

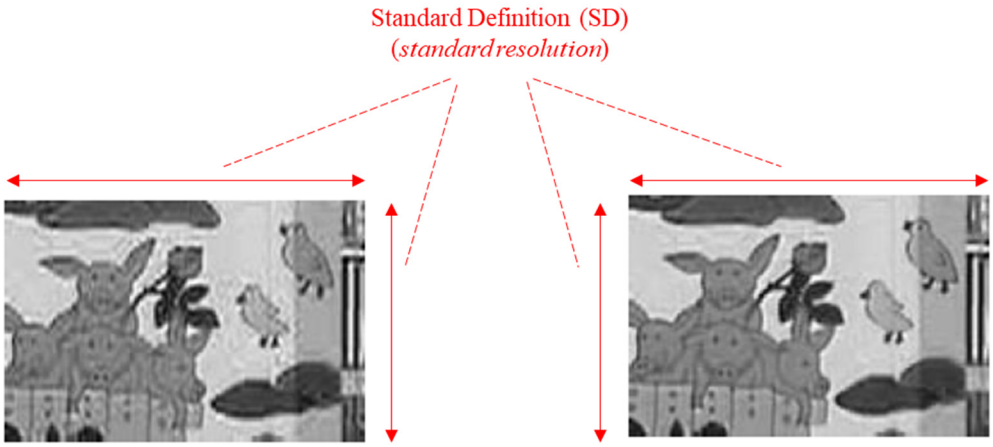

Fig. 11. Direct progressive SDTV. Mobcal at 5 Mbs/s. Part of the I-picture (frame 24, top field). PSNR = 28.5 dB.

Fig. 12. Enhanced to progressive SDTV. Mobcal at 5 Mb/s. Part of the I-picture (frame 24, top field). PSNR = 30.1 dB.

Original picture

Enhanced picture created using Martins' algorithm

SAMSUNG-1007, FIGs. 11 and 12 (annotated).

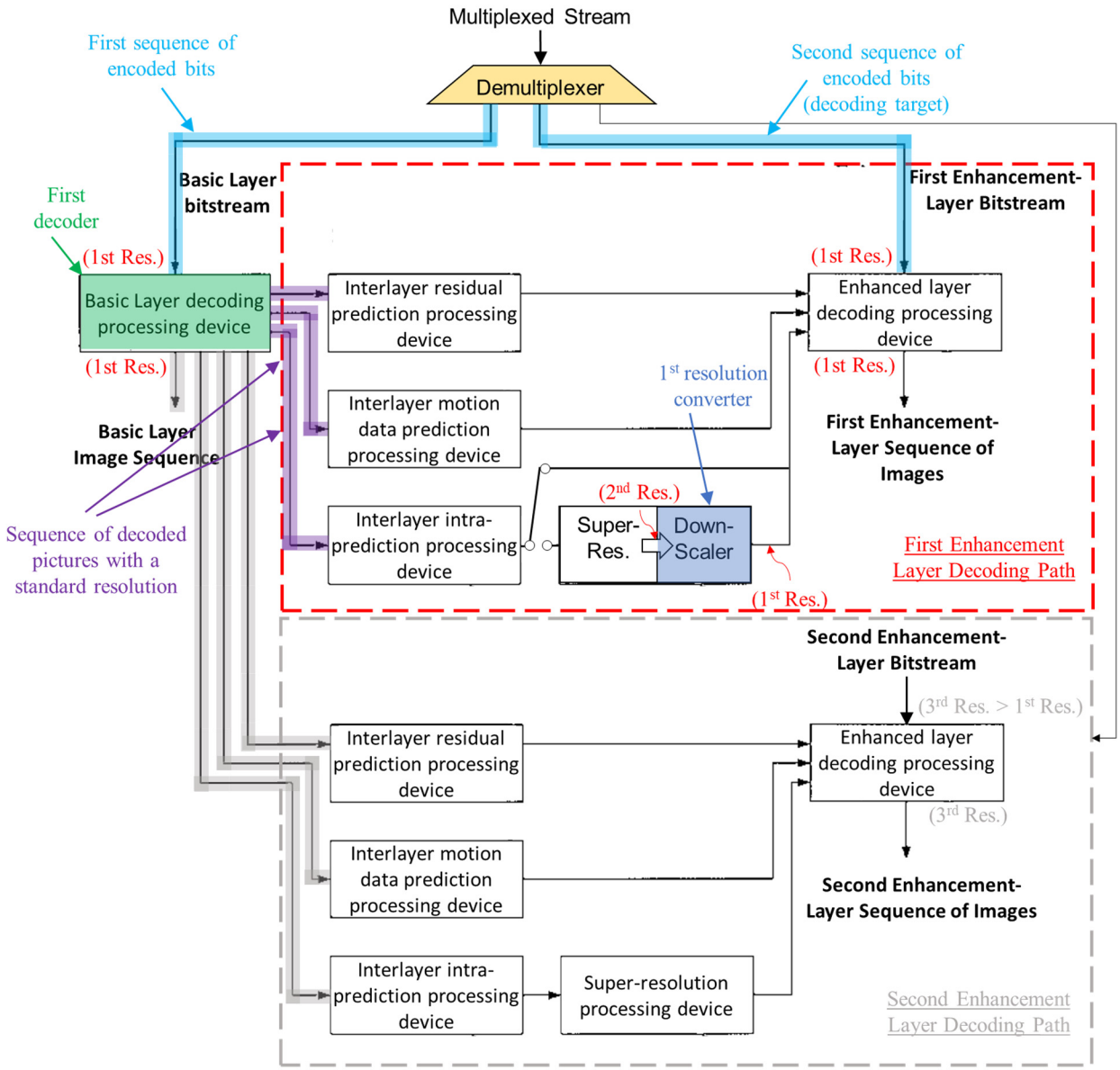

Illustration of Phek-Segall-Martins-He Combination

221. As shown above, the Phek-Segall-Martins-He decoding device includes a decimation processor (***first resolution converter***) based on Martins that acquires the sequence of super-resolution enlarged decoded basic-layer pictures created at the super-resolution processor (***first super-resolution enlarger***) to work on these pictures by

decimating them down to the first (lower or standard) spatial resolution (***a process for a prescribed resolution conversion to create a sequence of super-resolution decoded pictures with a standard resolution***). *Supra*, §§ VI.A, VI.C, and VIII.A.4;

[2.5.i] a second decoder configured to acquire the second sequence of encoded bits obtained with a standard resolution at the demultiplexer as a set of decoding targets, the sequence of decoded pictures created with the standard resolution at the first decoder as a set of first reference pictures, and the sequence of super-resolution decoded pictures created with the standard resolution at the first resolution converter as a set of second reference pictures, and

222. The Phek-Segall-Martins-He combination renders obvious [2.5.i]. Phek discloses, and the combination includes, an enhanced layer decoding processing device 432, an interlayer residual prediction processing device 424, an interlayer motion data prediction processing device 426, and an interlayer intra-prediction processing device 428 that collectively provide a "***second decoder***" as claimed.[11] SAMSUNG-1005, [0014]-[0015], FIG. 4b. Each of the processing devices 424, 426, 428, and 432 facilitates decoding of the (first) enhancement layer bitstream apart from decoding of the basic layer bitstream and collectively provide a "***second decoder***." *Id.*, [0015] ("An enhanced layer decoding processing device 432 decodes the enhanced layer bitstream using an

[11] The SR-D processors are also in the decoding loop and can optionally be considered part of the recited "***second decoder***."

interlayer residual prediction processing device 424, interlayer motion data prediction processing device 426, and interlayer intra prediction processing device 428.”).[12]

223. In the combination, as taught by Phek, the first enhancement layer decoding processing device 432 acquires a first enhancement layer bitstream (***second sequence of encoded bits obtained with a standard resolution at the demultiplexer***). SAMSUNG-1005, [0014]-[0015], FIG. 4b. It would have been obvious for reasons addressed above for the first enhancement layer in the Phek-Martins-Segall-He combination to encode/decode the enhancement layer sequence of images at the same (standard) spatial resolution as the base layer sequence of images by implementing known forms of layered, hierarchical coding in which both the base and

[12] In the combination, the super-resolution and downscaling (“SR-D”) processors are also in the (first) enhancement layer decoding loop and can optionally also be considered part of the collection of components corresponding to the recited “***second decoder***.” The SR-D processors can alternatively be considered as functional blocks distinct from the “***second decoder***” components consistent with the ’995 Patent specification’s treatment of the first super-resolution enlarger and first resolution converter—despite the fact that these components also reside in the decoding loop as an in-loop filter and are functionally equivalent to the SR-D processors in the Phek-Segall-Martins-He combination.

enhancement layers have the same spatial resolution (e.g., multiview coding, quality scalability, and/or temporal scalability). *Supra*, § VIII.A.1. The enhanced layer decoding processing device 432 acquires the first enhancement layer bitstream as "***a set of decoding targets***" that allow the second decoder to decode the enhancement layer stream (e.g., using residual values that represent differences between predicted pictures and target pictures in the enhancement stream). *Id.*, [0012], [0015]; *cf.*, SAMSUNG-1001, 15:30-54, 52:40-53:46 (describing similar decoding targets).

224. The teachings of Phek in view of Martins and He further render obvious that the components corresponding to the recited "***second decoder***" (i) acquire the sequence of decoded pictures created with the standard resolution from the basic layer decoding processing device 422 (***first decoder***) as a set of first reference pictures and (ii) acquire the sequence of super-resolution decoded pictures created with the standard resolution from the output of the decimation/downscaling processor (***first resolution converter***) as a set of second reference pictures. SAMSUNG-1005, [0014]-[0015], FIG. 4b; SAMSUNG-1007, §IV, FIG. 2; *supra*, §§VIII.A.4, VIII.A.5. For example, Phek discloses that, at the encoder, an "interlayer intra-prediction processing device 408 uses an intra image of the basic layer or a reconstructed image of the basic layer as an additional reference image for encoding the image of the enhanced layer" and "[a] super-resolution processing device 410 is used to improve these additional reference images." SAMSUNG-1005, [0014]. On the decoding side, "[a]s in the encoder, a super-

resolution processing device 430 is used to improve the reference picture from the inter-layer intra-prediction processing device 428." *Id.*, [0015]. Based on fundamental video decoding techniques known by the Critical Date, a POSITA would have recognized from Phek's disclosure, and it would have been obvious, that the inter-layer intra-prediction processing device 428 obtains decoded base layer images as reference pictures for the interlayer prediction of enhancement layer images. SAMSUNG-1007 ("uses … a reconstructed image of the basic layer as an additional reference image for encoding the image of the enhanced layer").

225. Further, in the combination, He teaches that the SR-D processors, which form a loop filter analogous to He's deblocking loop filter, can be selectively applied to filter/enhance reference pictures in an enhancement layer of a layered video coding system (e.g., a scalable video coding system). SAMSUNG-1008, [0034]. See also, *id.*, [0006]-[0008], [0023]-[0035], [0086]-[0087], FIGs. 1-3, 7. *Supra*, §§ VI.D, VIII.A.5. When SR-D filtering is applied to a sequence of images, the enhanced layer decoding processing device 432 acquires SR-D filtered versions of the decoded base layer sequence of images (***sequence of super-resolution decoded pictures created with the standard resolution at the first resolution converter***) as a set of second reference pictures. SAMSUNG-1005, [0014]-[0015], FIG. 4b; *supra*, § VIII.A.5. When SR-D filtering is not applied (bypassed) with respect to a sequence of images, the enhanced layer decoding processing device 432 uses the decoded base layer sequence of images

(rather than SR-D filtered versions) acquired by the inter-layer intra-prediction processing device 428 as a set of first reference pictures. *Id.* The combination's "***second decoder***" thus acquires the SR-D filtered (second) set of reference pictures when SR-D filtering is enabled and acquires the decoded base layer sequence of images as a set of first reference pictures both when SR-D filtering is enabled (as needed to perform the SR-D filtering) and when it is not.

226. He also teaches that loop filtering can be selectively applied to different images in a video stream such that both the first and second sets of reference pictures would be acquired by the first enhancement layer decoder to decode different sequences of images in the first enhancement layer stream. *Id.*; SAMSUNG-1008, [0027]-[0028], [0034]-[0037], [0053]-[0054]. Analogously, it would have been obvious to acquire both the first and second sets of reference pictures to decode different slices of enhancement layer images with reference to either SR-D filtered or non-SR-D filtered reference pictures as explained below. *Infra*, [11];

227. The following figure illustrates use of the non-SR-D filtered version of the decoded base layer images as a set of first reference pictures when the SR-D filter is disabled:

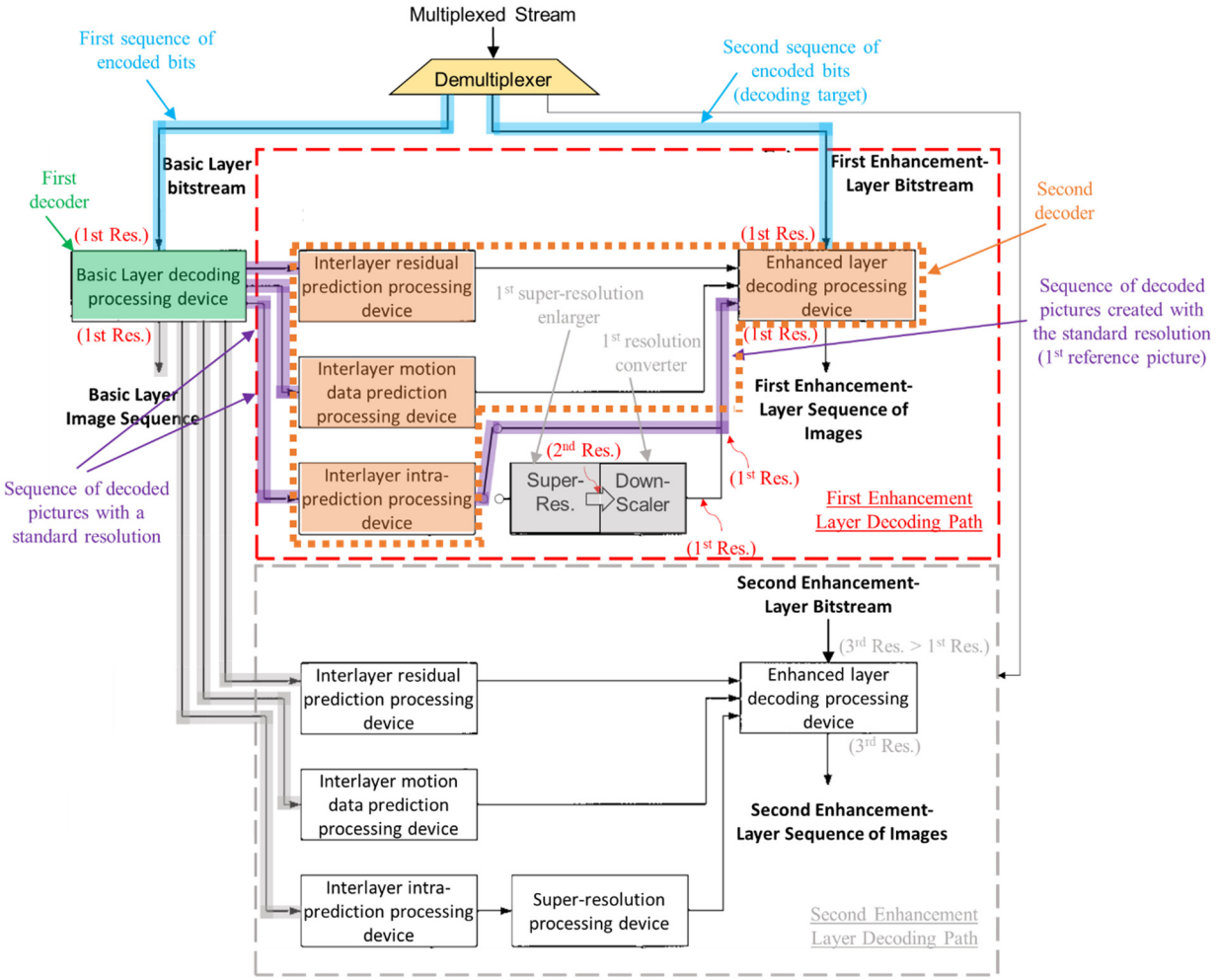

Illustration of Phek-Segall-Martins-He Combination

228. By contrast, the following figure illustrates use of the SR-D filtered version of the decoded base layer images as a set of second reference pictures when the SR-D filter is enabled:

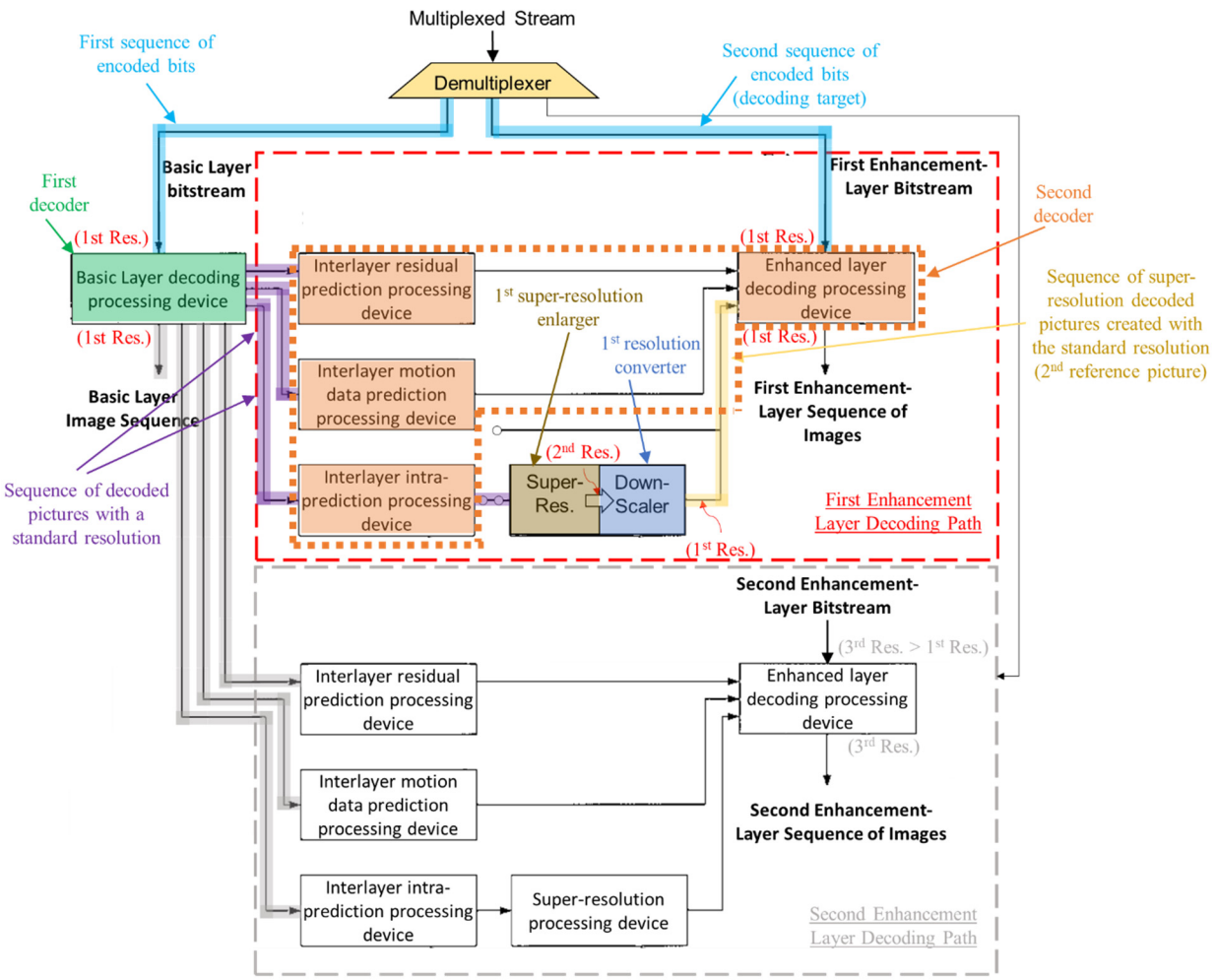

Illustration of Phek-Segall-Martins-He Combination

[2.5.ii] [a second decoder configured to . . .] select one of the set of first reference pictures and the set of second reference pictures based on reference picture selection information to implement a combination of processes for a prescribed prediction and a prescribed second decoding being a decoding with an extension of the standard resolution, to create a sequence of super-resolution pictures decoded with the standard resolution based on the set of decoding targets and the set of selected reference pictures; and

229. The Phek-Segall-Martins-He combination renders obvious [2.5.ii]. *See also supra* §§[2.5.i], VI.A, VI.D, VIII.A.5. As discussed above (*supra*, [2.5.i]), in the combination, the enhancement layer decoding processing device 432 decodes pictures

in the enhancement layer bitstream using either decoded base layer pictures that have not been enhanced/improved by SR-D filtering (***first set of reference pictures***) or decoded base layer pictures that have been enhanced/improved by SR-D filtering (***second set of reference pictures***). The enhancement layer decoding processing device 432 (and/or other components in the first enhancement layer decoding path corresponding to the recited "***second decoder***") whether to use SR-D filtered or non-SR-D filtered reference pictures based on control information transmitted in the multiplexed signal from the encoder, based on the teachings of He. *Supra*, § VIII.A.5.

230. For example, He discloses "a deblocking control flag of scalable video system for indicating presentation of deblocking parameters for multiple layers " in a bitstream. SAMSUNG-1008, [0002]. He discloses that "[t]he deblocking parameters determine whether deblock filtering is enabled or disabled and additional deblocking settings when enabled. A deblocking enable/disable parameter is set to "0" to enable deblock filtering and to "1" to disable deblock filtering." SAMSUNG-1008, [0007]. In FIG. 7, He illustrates "deblocking filter control information provided in an output bitstream BTS from the SVC video encoder 601 (e.g., OBTS), or provided in an input bitstream BTS (e.g., IBTS) to the video decoder 603… The bitstream BTS includes at least one video information sequence 701… The video information sequence 701 further includes one or more video frames including an exemplary video frame 705… The video frame 705, for example, includes a frame header 707 at the front of the video

frame 705 which further includes a deblocking filter control present flag 709, labeled "F"." SAMSUNG-1008, [0052].

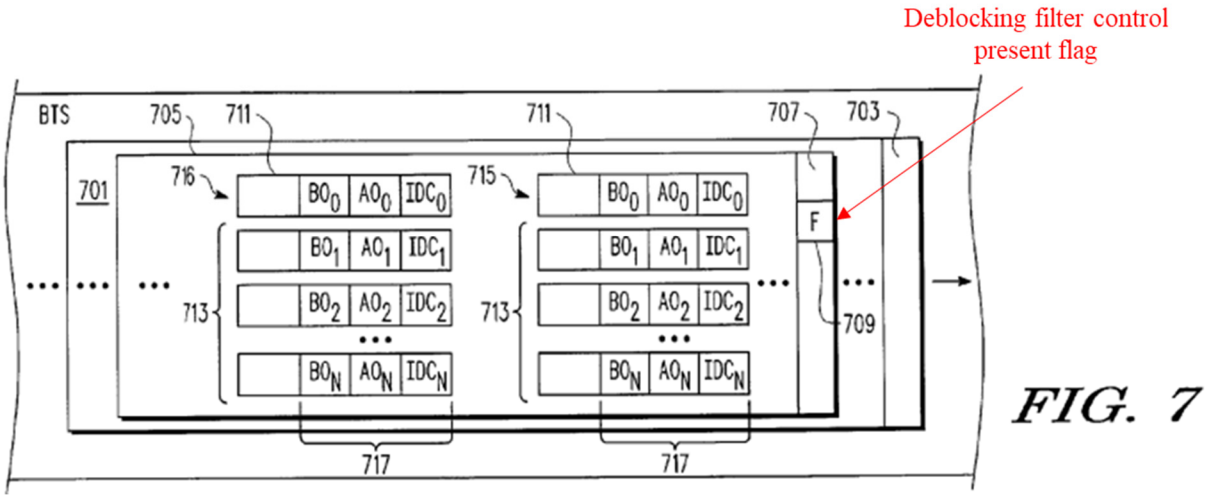

FIG. 7

SAMSUNG-1008, FIG. 7 (annotated).

231. He discloses, in FIG. 2, a deblock control circuit 221. SAMSUNG-1008, FIG. 2. Based on the value of the deblocking control flag, the deblock control circuit 221 issues control signals to a deblocking filter 131 to selectively enable/disable the use of a deblock filter on reconstructed (decoded) frames. SAMSUNG-1008, [0006]-[0008]. When the deblock filter is enabled, the filtered (enhanced) reconstructed frame is used as a reference picture for prediction of a subsequent frame. When the deblock filter is disabled, the original (unfiltered or non-enhanced) reconstructed frame is used as the reference picture for prediction of a subsequent frame. *Id.*, [0034].

232. He discloses that "the deblocking filter 211 is configured in a similar manner as the deblocking filter 131, and includes a similar decoder filter control DFC signal provided by a deblock control circuit 221. As with the deblocking filter 131, if

the deblocking filter 211 is disabled, then the unfiltered reconstructed frame information URF' is passed as the "filtered" reconstructed information RF' in which deblock filtering is bypassed." SAMSUNG-1008, [0034].

233. Based on He's teachings, it would have been obvious to a POSITA to implement an analogous "control circuit" in the combination with Phek-Martins-Segall configured to selectively enable/disable SR-D filtering of base layer frames that are used for prediction of enhancement layer frames. In the combination, it would have been obvious for the control circuit to be configured to selectively enable/disable the super-resolution enlarger and downscaler circuits, which form a loop filter analogous to He's deblock filter. *Supra*, § VIII.A.5.

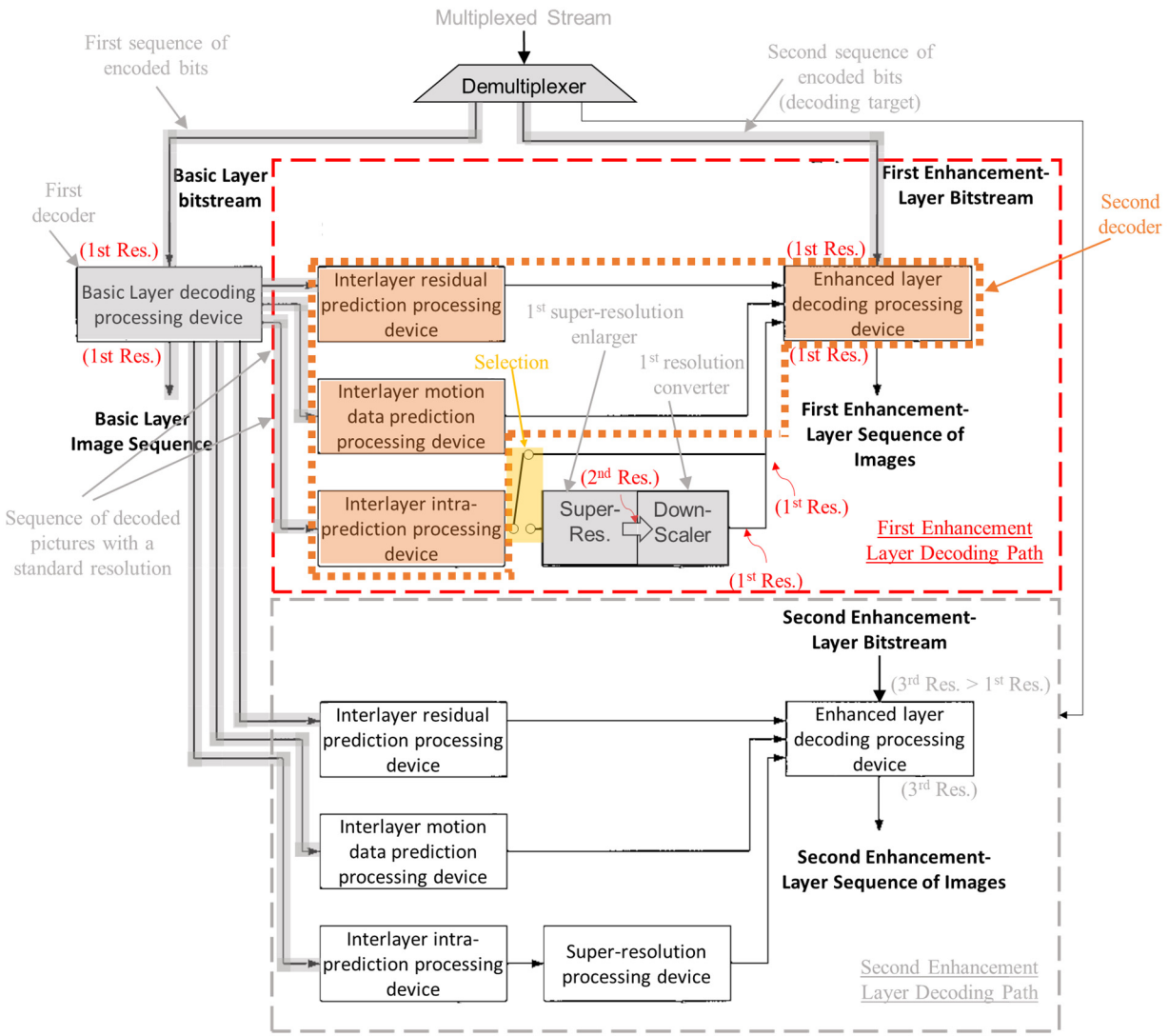

Illustration of Phek-Segall-Martins-He Combination

This figure illustrates selectivity of the SR-D filter.

234. Thus, as illustrated above, the "***second decoder***" as implemented in the Phek-Segall-Martins-He combination selects either the sequence of base-layer decoded pictures (when SR-D filter is disabled) as a set of first reference pictures or the sequence of super-resolution enhanced and downscaled base-layer decoded pictures (when SR-D filter is enabled) as the set of second reference pictures. Control signals like those

taught in He (e.g., analogous to He's "deblocking enable/disable parameter" and "deblocking control flag") would provide the first enhancement-layer decoding path with "***reference picture selection information***" as claimed.

235. Further, based on Phek's teachings, it would have been obvious for the enhancement layer decoding processing device 432 to implement a combination of processes for a prescribed prediction and a prescribed second decoding with an extension of the standard resolution to create a sequence of super-resolution pictures decoded with the standard resolution based on the set of decoding targets and the set of selected reference pictures. Phek discloses that super-resolution processing improves the "reference picture." SAMSUNG-1005, [0015]. A POSITA would have known and found obvious that a "reference picture" in video decoders is used for the prediction of at least a portion of another picture in the same or related video stream. *Supra*, § II.E; SAMSUNG-1008, FIG. 2 and [0033] (describing use of reference pictures for motion compensated predictions). Phek also renders obvious a prescribed second decoding with an extension of the standard resolution through its disclosure that the "enhanced layer decoding processing device 432 decodes the enhanced layer bitstream." SAMSUNG-1005, [0015]; *see also id.*, [0012]. A POSITA would have known that complete decoding of a picture in a compressed video stream involves additional operations beyond prediction of the picture from a reference picture. Decoding additionally involves adding residual information to the predicted picture to correct

differences between the predicted picture and the picture that is targeted for decoding. *Supra*, § II.E; SAMSUNG-1008, FIG. 2 and [0032] ("combiner 207 adds selected prediction information P' to R' to generate unfiltered reconstructed information").

236. It would have been obvious for the second decoder in the combination to decode and thus create a sequence of (first) enhancement layer pictures by further implementing a prescribed decoding to add residual information from the (first) enhancement layer bitstream ("***set of decoding targets***") to the pictures predicted from the selected set of reference pictures, consistent with ordinary video processing techniques like those identified in Phek. A POSITA would have been motivated to add residual information to the predicted pictures to improve the quality of the decoded pictures in the first enhancement layer stream. Moreover, as described above in the combination overview, it would have been obvious for the first enhancement layer to decode the first enhancement layer stream at the same, standard resolution as the base layer stream. *Supra*, §VIII.A.1. The first enhanced decoding processing device 432 thus decodes with an extension of the standard resolution and outputs picture with the standard spatial resolution as claimed, albeit with greater detail than the base layer stream as a result of the super-resolution processing. *Id.*; *supra*, §§II.A.C-4.

237. He explains that "'adaptively disabling deblock filtering' as used herein refers to enabling or disabling or turning on or off ***all*** or a portion of deblock filtering of video information." SAMSUNG-1008, [0077] (emphasis added). "Based on the

content characteristic of the video information, deblock filtering may be fully disabled or fully enabled or partially disabled ***for all*** or a portion of the video information." *Id.*, [0077]. In contrast to partial disablement—which "concerns partial or full disablement of deblock filtering ***for selected slices or selected layers*** of a multilayer configuration," full disablement involves disabling for all slices and pictures in a video stream. *Id.* (emphasis added); *see also id.*, [0027]-[0028], [0037]-[0038]. When He's deblocking filter is fully enabled, it selects a sequence of filtered reference pictures for prediction of a sequence of target pictures. When He's deblocking filter is fully disabled, it selects a sequence of unfiltered reference pictures for prediction of a sequence of target pictures. In the combination, based on He's teachings, it would have been obvious to select sets of SR-D filtered or non-SR-D filtered reference pictures and to create sequences of super-resolution decoded pictures decoded with the standard resolution using either set of reference pictures when the SR-D filtering is either fully enabled or disabled. Likewise, it would have been obvious that, even when filtering is performed on a slice-by-slice or frame-by-frame basis, a sequence of either SR-D filtered or non-SR-D filtered reference pictures could be selected independently across the sequence of slices or frames. The sequence of decoded pictures would be super-resolution pictures in either case. For example, as I explained above in the combination overview, the first enhancement layer's video stream can be a super-resolution enhanced version of the base layer video stream. *Supra*, FN8.

[2.6] a second resolution converter configured to acquire the sequence of decoded pictures with the standard resolution from the first decoder to work on the sequence of decoded pictures to implement an interpolation of pixels with the second enlargement to create a sequence of enlarged decoded pictures with a high resolution as a second resolution higher than the standard resolution,

238. The Phek-Segall-Martins-He combination renders obvious [2.6]. For example, Phek discloses that its "Interlayer Predictive Encoding and Decoding Devices" can be implemented using "scalable" video coding techniques, and Segall teaches that a common type of scalable video coding before the '995 Patent was "spatial" scalability. SAMSUNG-1006, 1 ("provides a mechanism for reusing an encoded lower resolution version of an image sequence for the coding of a corresponding higher resolution sequence"), 2-3 ("The lowest resolution video data in a spatially scalable system is sometimes referred to as the *base layer* …, and the higher resolution video data is often referred to as the *enhancement layer*. Processes that determine or predict the value of enhancement layer data from previously reconstructed data of a lower resolution layer at the same time instance are referred to as *inter-layer* prediction processes[] …"), FIG. 1. Segall explains that known scalable architectures before the Critical Date allowed for "multilayer scenarios" so that different enhancement layers could encode/decode video streams each with different spatial resolutions. *Id.*, 3.

239. As described above in the overview of the Phek-Segall-Martins-He combination, it would have been obvious to augment Phek's decoding device of FIG.

4b with a second enhancement layer implementing spatial scalability so that it would use decoded base layer pictures to predict higher resolution pictures encoded in a second enhancement layer stream. *Supra*, §VIII.A.2. The second enhancement layer thus provides a "***second resolution converter***" configured to acquire the sequence of decoded pictures with the standard resolution from the basic layer decoding processing device 422 (***first decoder***) to work on the sequence of decoded pictures to implement an interpolation of pixels with a second enlargement to create a sequence of enlarged decoded pictures as the output of the second enhancement layer with a high resolution higher than the standard resolution. SAMSUNG-1006, 4 ("using up-sampling of the decoded lower resolution picture"), 4 ("lower resolution picture array to be up-sampled"), 6 ("interpolation filter" and "interpolating kernel"), 7 ("bilinear interpolation").

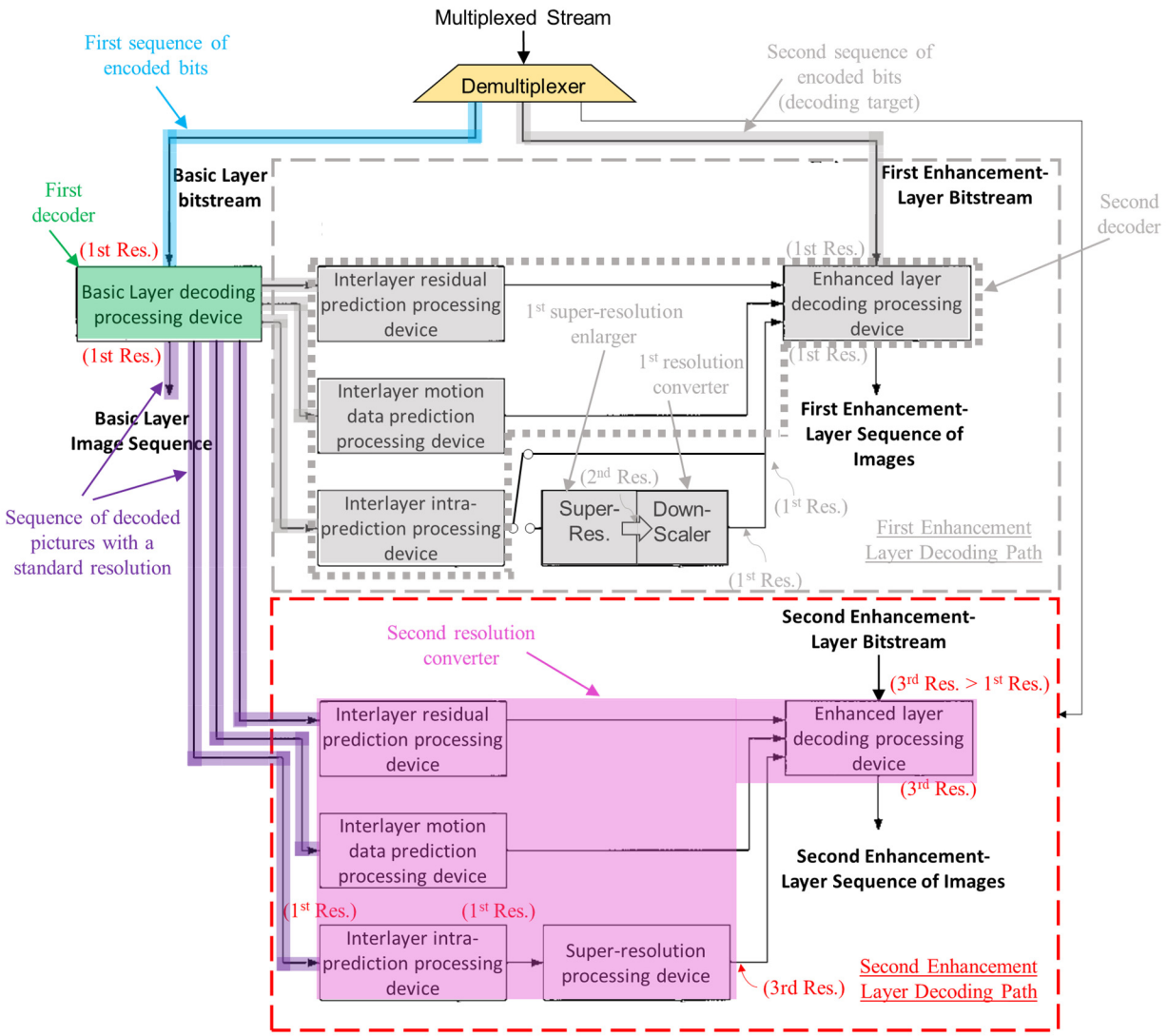

Illustration of Phek-Segall-Martins-He Combination

First mapping of the second resolution converter

240. Moreover, Phek's super-resolution processing involves uses a set of lower-resolution images to generate a super-resolution image of higher quality and spatial resolution than the individual lower-resolution images. SAMSUNG-1005, [0002]-[0003]. A super-resolution processing device 430 that implements super-resolution processing to enhance reference pictures in the second enhancement layer

provides another structure that renders obvious the recited "***second resolution converter***" in the combination. This second super-resolution processing device 430 works on decoded base-layer pictures at the standard resolution to create a sequence of enlarged decoded pictures with a high resolution as a second resolution higher than the standard resolution. SAMSUNG-1005, [0014]-[0016], FIGS. 1a-1b, 4a-4b.

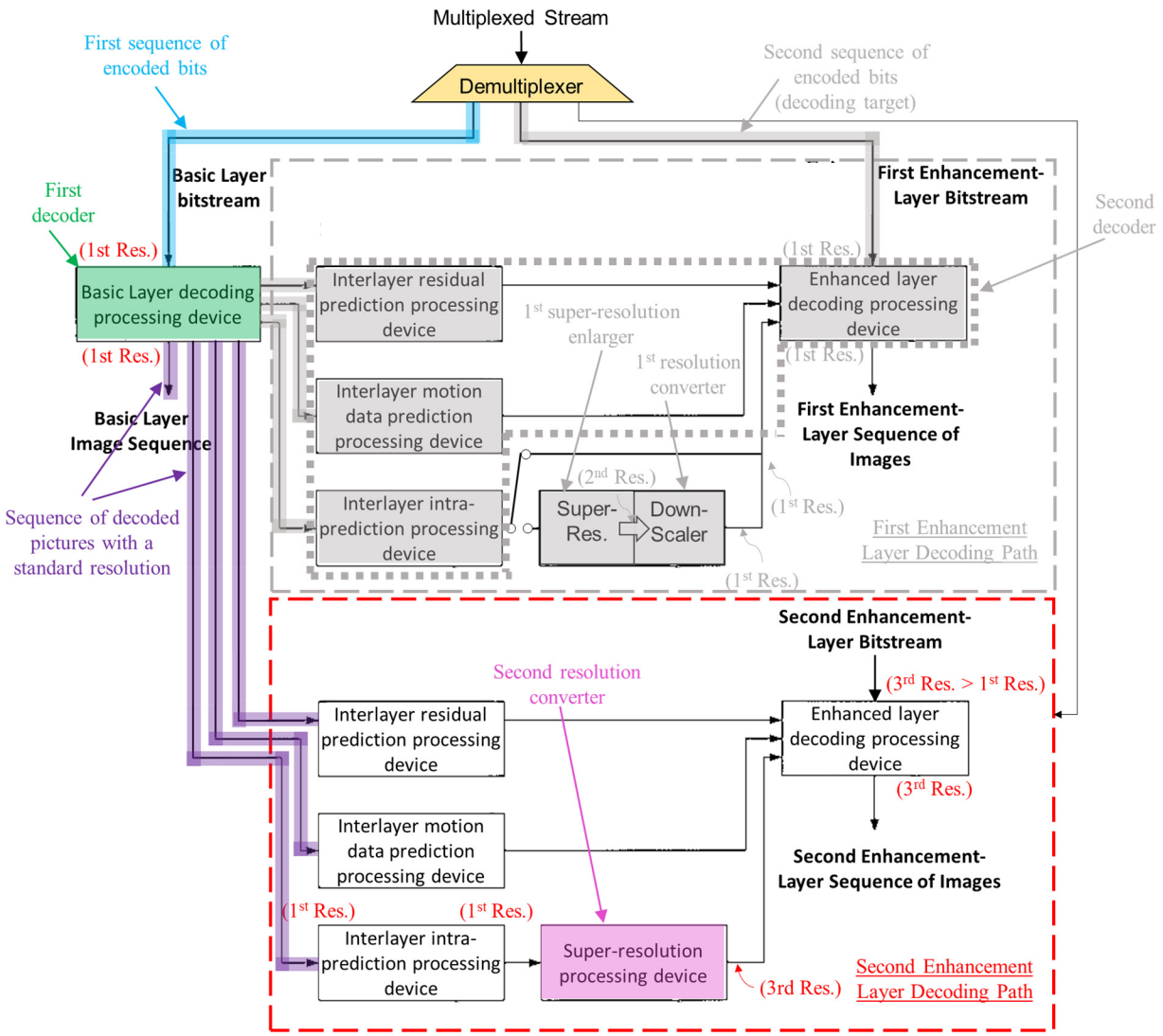

Illustration of Phek-Segall-Martins-He Combination

Second mapping of the second resolution converter.

[2.7] wherein the set of decoding targets, the set of first reference pictures, and the set of second reference pictures have the same value in spatial resolution.

241. As described above, it would have been obvious to implement the decoding device in the Phek-Segall-Martins-He combination such that the set of decoding targets in the first enhancement layer, the set of first reference pictures (e.g., decoded base layer pictures without SR-D filtering), and the set of second reference pictures (e.g., decoded base layer pictures with SR-D filtering) have the same spatial resolution. *Supra*, §§VIII.A.1.

2. Claim 3

[3.P] A moving picture decoding method comprising:

242. The Phek-Segall-Martins-He combination would have rendered this claim element obvious for at least the reasons described above with respect to [2.P].

[3.1] a step of implementing a process for a prescribed demultiplexing on a sequence of input encoded bits, outputting at least a first and a second sequence of encoded bits;

243. The Phek-Segall-Martins-He combination would have rendered this claim element obvious for at least the reasons described above with respect to [2.1].

[3.2] a step of acquiring the first sequence of encoded bits obtained with a standard resolution through the process for the prescribed demultiplexing, implementing thereon a process for a prescribed first decoding, creating a sequence of decoded pictures with the standard resolution;

244. The Phek-Segall-Martins-He combination would have rendered this claim element obvious for at least the reasons described above with respect to [2.2].

[3.3] a step of acquiring the sequence of decoded pictures created with the standard resolution through the process for the prescribed first decoding, working on the sequence of decoded pictures to implement an interpolation of pixels with a first enlargement, creating a sequence of super-resolution enlarged decoded pictures with a first resolution higher than the standard resolution;

245. The Phek-Segall-Martins-He combination would have rendered this claim element obvious for at least the reasons described above with respect to [2.3].

[3.4] a step of acquiring the sequence of super-resolution enlarged decoded pictures created through the process for the prescribed super-resolution enlargement working on the sequence of super-resolution enlarged decoded pictures to implement a process for a first resolution conversion, creating a sequence of super-resolution decoded pictures with a standard resolution;

246. The Phek-Segall-Martins-He combination would have rendered this claim element obvious for at least the reasons described above with respect to [2.4].

[3.5.i] a step of acquiring the second sequence of encoded bits obtained with a standard resolution through the process for the prescribed demultiplexing as a set of decoding targets, the sequence of decoded pictures created with the standard resolution through the process for the prescribed first decoding as a set of first reference pictures, and the sequence of super-resolution decoded pictures created with the standard resolution through the process for the prescribed resolution conversion as a set of second reference pictures, and

247. The Phek-Segall-Martins-He combination would have rendered this claim element obvious for at least the reasons described above with respect to [2.5.i].

[3.5.ii] selecting one of the set of first reference pictures and the set of second reference pictures based on reference picture selection information to implement a combination of processes for a prescribed prediction and a prescribed second decoding being a decoding with an extension of the standard resolution, based on the set of decoding targets and the set of

selected reference pictures to create a sequence of super-resolution pictures decoded with the standard resolution; and

248. The Phek-Segall-Martins-He combination would have rendered this claim element obvious for at least the reasons described above with respect to [2.5.ii].

[3.6] a step of acquiring the sequence of decoded pictures created with the standard resolution through the process for the prescribed first decoding working on the sequence of decoded pictures to implement an interpolation of pixels with the second enlargement, creating a sequence of enlarged decoded pictures with a high resolution as a second resolution higher than the standard resolution,

249. The Phek-Segall-Martins-He combination would have rendered this claim element obvious for at least the reasons described above with respect to [2.6].

[3.7] wherein the set of decoding targets, the set of first reference pictures, and the set of second reference pictures have the same value in spatial resolution.

250. The Phek-Segall-Martins-He combination would have rendered this claim element obvious for at least the reasons described above with respect to [2.7].

3. Claim 4

[4.P] A recording medium storing a moving picture decoding program comprising a non-transitory computer-readable medium configured to have a computer execute:

251. The Phek-Segall-Martins-He combination would have rendered this claim element obvious for at least the reasons described above with respect to [2.P].

[4.1] a step of implementing a process for a prescribed demultiplexing on a sequence of input encoded bits, outputting at least a first and a second sequence of encoded bits;

252. The Phek-Segall-Martins-He combination would have rendered this claim element obvious for at least the reasons described above with respect to [2.1].

[4.2] a step of acquiring the first sequence of encoded bits obtained with a standard resolution through the process for the prescribed demultiplexing, implementing thereon a process for a prescribed first decoding, creating a sequence of decoded pictures with the standard resolution;

253. The Phek-Segall-Martins-He combination would have rendered this claim element obvious for at least the reasons described above with respect to [2.2].

[4.3] a step of acquiring the sequence of decoded pictures created with the standard resolution through the process for the prescribed first decoding, working on the sequence of decoded pictures to implement an interpolation of pixels with a first enlargement, creating a sequence of super-resolution enlarged decoded pictures with a first resolution higher than the standard resolution;

254. The Phek-Segall-Martins-He combination would have rendered this claim element obvious for at least the reasons described above with respect to [2.3].

[4.4] a step of acquiring the sequence of super-resolution enlarged decoded pictures created through the process for the prescribed super-resolution enlargement working on the sequence of super-resolution enlarged decoded pictures to implement a process for a first resolution conversion, creating a sequence of super-resolution decoded pictures with a standard resolution;

255. The Phek-Segall-Martins-He combination would have rendered this claim element obvious for at least the reasons described above with respect to [2.4].

[4.5.i] a step of acquiring the second sequence of encoded bits obtained with a standard resolution through the process for the prescribed demultiplexing as a set of decoding targets, the sequence of decoded pictures created with the standard resolution through the process for the prescribed first decoding as a set of first reference pictures, and the sequence of super-resolution decoded

pictures created with the standard resolution through the process for the prescribed resolution conversion as a set of second reference pictures, and

256. The Phek-Segall-Martins-He combination would have rendered this claim element obvious for at least the reasons described above with respect to [2.5.i].

[4.5.ii] selecting one of the set of first reference pictures and the set of second reference pictures based on reference picture selection information to implement a combination of processes for a prescribed prediction and a prescribed second decoding being a decoding with an extension of the standard resolution, based on the set of decoding targets and the set of selected reference pictures to create a sequence of super-resolution pictures decoded with the standard resolution; and

257. The Phek-Segall-Martins-He combination would have rendered this claim element obvious for at least the reasons described above with respect to [2.5.ii].

[4.6] a step of acquiring the sequence of decoded pictures created with the standard resolution through the process for the prescribed first decoding, working on the sequence of decoded pictures to implement an interpolation of pixels with the second enlargement creating a sequence of enlarged decoded pictures with a high resolution as a second resolution higher than the standard resolution,

258. The Phek-Segall-Martins-He combination would have rendered this claim element obvious for at least the reasons described above with respect to [2.6].

[4.7] wherein the first resolution is different from the second resolution,

259. The Phek-Segall-Martins-He combination would have rendered this claim element obvious for at least the reasons described above with respect to [2.6] and §§VIII.A.1, VIII.A.2.

[4.8] wherein the standard resolution of the second sequence of encoded bits is the same as the standard resolution of the super-resolution decoded pictures,

260. The Phek-Segall-Martins-He combination would have rendered this claim element obvious for at least the reasons described above with respect to [2.6] and §§VIII.A.1, VIII.A.2.

[4.9] and wherein the set of decoding targets, the set of first reference pictures, and the set of second reference pictures have the same value in spatial resolution.

261. The Phek-Segall-Martins-He combination would have rendered this claim element obvious for at least the reasons described above with respect to [2.7] and §§VIII.A.1, VIII.A.2.

4. Claim 11

[11] The moving picture decoding system according to claim 2, wherein the second decoder divides a decoding target into a plurality of regions to select one of the set of first reference pictures and the set of second reference pictures for each divided region.

262. The Phek-Segall-Martins-He combination renders obvious [11]. *Supra* §VIII.A.5, [2.5.i] and [2.5.ii]. The additional features recited in [11] simply reflect the common practice of individually encoding and decoding different blocks or other regions of a picture in a video stream (e.g., rather than entire pictures as a whole). *See also* SAMSUNG-1030, 8 ("Whereas the basic coding unit for spatial redundancy reduction in MPEG is based on an 8 x 8 block, motion-compensation is usually based on a 16 pixel by 16 line *macroblock*. The size of the macroblock is a trade-off between

the need to minimize the bit-rate required to transmit the motion representation (known as *motion vectors*) to the decoder, which supports the case for a large macroblock size, and the need to vary the prediction process locally within the picture content and movement, which supports the case for a small macroblock size."); *supra*, §II.E. Phek itself teaches that enhancement layer pictures can be coded by macroblocks. SAMSUNG-1005, [0014] ("motion data include the partition size and type used of each macroblock, as well as the prediction direction and motion vector").

263. He likewise discloses that "[e]ach video frame is subdivided" into macroblock (MB) levels, "where each MB is a 16×16 block of pixels." SAMSUNG-1008, [0004], [0034], [0086]. "The video decoder 200 generally processes information one macroblock at a time." *Id.*, [0034]. He further teaches that separate loop filter (e.g., deblocking filter) controls can be applied to each "slice" in a coded video stream, where "each slice incorporates one or more macroblocks." *Id.*, [0053]-[0054]. For instance, the loop filter can be selectively enabled or disabled for each slice. *Id.*

264. It would have been obvious to apply He's teachings regarding slice-level selective loop filtering in the Phek-Segall-Martins-He combination so that the second decoder (e.g., processors 424, 426, 428, 432) in the first enhancement layer would divide the decoding target in the first enhancement layer stream into a plurality of slices (regions) and select whether to use an SR-D filtered version or a non-SR-D filtered version of a reference picture for prediction of each divided region. A POSITA would

have sought to implement slices in the combination in this manner to reduce the size of the coding unit and allow for more variance in the prediction processes applied to decode different regions of the target picture, which would allow for greater compression and improved prediction quality for individual slices. *Id.*; SAMSUNG-1030, 8. A POSITA would have had a reasonable expectation of success given that slices were commonly implemented in MPEG systems before the Critical Date and He already proposed selective loop filtering on a slice-by-slice basis.

IX. Additional Remarks

265. I currently hold the opinions set expressed in this declaration. But my analysis may continue, and I may acquire additional information and/or attain supplemental insights that may result in added observations.

EXHIBIT A

Cliff Reader, Ph.D.

Expertise

- Real-time Processing and Display
- Video coding (MPEG-HEVC)
- Audio coding (MPEG-AAC)
- Imaging/Video Systems Architecture
- Imaging/Video Chip Architecture
- Videoconferencing
- Speech Processing
- Consumer audio/video
- Reconnaissance Imaging
- Medical Imaging

Professional Summary

Dr. Reader has over forty five years of work experience in digital imaging, digital video & audio and digital speech processing. In the 1970's and early 1980's, he was one of the leaders in the digital imaging field, performing extensive work in areas of compression, real-time processing, real-time display, image enhancement, and others. Applications included reconnaissance imaging, medical imaging, earth resources management and videoconferencing. This work anticipated much of the technology being used in contemporary consumer digital video systems. He has in-depth experience of the commercial history and when key parts of technology were first developed and published.

Dr. Reader's career includes technical work in areas of algorithm design, system design, and semiconductor chip design; and business development, marketing and sales work in areas of market analysis, product roadmap development and direct sales.

Dr. Reader has held many leadership roles in standards development: US Head of Delegation to MPEG (1991-1993); chief editor of the MPEG1 standard (1991-1993); instigator of the successful effort to make MPEG2 the market standard for digital TV over proprietary competitors in the US and national competitors in Europe and Japan (1992); MPEG4 Subcommittee Chairman (1993-1996); AVS (China) Subgroup Chairman (2003-Present). He is an expert in all major audio-video standards. MPEG audio (Layer I, II, mp3, AAC), Dolby AC3, MPEG video (1, 2, 4), H.264, Windows Media 9 (VC-1), H.265 (HEVC), AVS and AV1. He is also an expert in DVD standards, including formatting, navigation and authoring.

Dr. Reader has extensive experience in patent licensing and patent pools. He was the technical expert for developing the initial list of potentially essential patents for the first MPEGLA patent pool (MPEG2 video and systems). He is the Co-Director leading the pool formation and license negotiations for the AVS patent pools. Dr. Reader has experience in the valuation of patents and the acquisition and sale of patent portfolios.

Dr. Reader has authored over twenty technical papers, two book chapters and two patents in digital video processing, display, and compression. He taught digital signal processing and image processing at Santa Clara University in the early 1980s and is an Adjunct Professor at Peking University, Beijing, China.

Employment History

From: 2001 **Independent Consultant**
To: Present Escondido, CA

Provide technical and marketing consulting services in the areas of digital imaging, digital video, digital audio and speech including:

- consumer video
- real-time processing and display
- image and video & audio compression (specializing in standards)
- imaging/video systems architecture
- imaging/video chip architecture
- audio/video transmission, including optical & wireless networks

Over 80 clients including Apple, AT&T, Adobe, Broadcom, China Central TV, Chinese Academy of Sciences, Cisco, Comcast, DirecTV, Dish Network, Disney, EchoStar, ETRI, Facebook, Fujifilm, Gateway, GE, Google, Haier, Hisense, HP, Hulu, IBM, Intel, Johnson Controls, KAIST, Lenovo, LG, Matsushita, MediaTek, Microsoft, Motorola, Netflix, Nikon, Nokia, ON2, OPPO, Peloton, Philips, Quanta, Riverbed, Samsung, Sharp, Siemens, Sony, Starz, Sun Microsystems, Toshiba, TPV, Tyco, US Department of Justice, Verizon, Vimeo, Vizio, Wistron, Xiaomi, Yahoo, Zoran and ZTE.

<u>Personal database of patent analysis:</u>
-Evaluation of all the US patents in the MPEG2, H.264 and H.265 patent pools.
-Evaluation of the US patents and published applications underlying the H.264 and H.265 standards.
-Personal archive of over 2000 audiovisual patents.

<u>Personal database of audio and video prior art.</u>
-Virtually complete collection of all contributions to the H.26x and MPEGx families of standards from 1985 to today.
-Many hundreds of technical journal and conference articles documenting the first invention of key technologies.
-Work-in-progress book on the history of video compression.
-Historical collection of technical data from the earliest digital video, image processing and real-time image display systems in the 1970s and 1980s.

From: 1999 **nDSP Corporation**
To: 2001 Campbell, CA
Title: *Vice President of Marketing and Acting Vice President of Sales*

Responsible for marketing and sales in a startup company providing high-quality video signal processors to TV manufacturers. Developed product specifications and roadmap. Built and managed sales and marketing team of 6 direct and contractor staff in the US and Japan to provide technical sales, sales support, application engineering, Marcomm and PR. Established distribution in China, Japan and throughout the Far East. Secured first sales as company moved into production phase with design wins in China, Japan and Europe. Initiated and secured major design wins in emerging Progressive DVD business, with production volumes beginning in 4Q00 at an annualized rate of $3.5M. Established strategic partnership with Pixelworks in LCD chip business. Pixelworks acquired nDSP in 2001.

From: 1997 **CagEnt Technologies, Inc. (wholly owned by Samsung)**
To: 1998 Santa Clara, CA
Position: *Vice President of Sales, Digital Video Products*
Responsible for a line of PC-based real-time MPEG2 and Dolby Digital encoders. Established distribution agreements for third-party DVD authoring software. Secured OEM contracts for the products. Built the sales channel worldwide. Built sales to break-even point in 9 months leading to sale of the product line.

From: 1993 **Samsung Semiconductor, Inc.**
To: 1997 San Jose, CA
Position: *Director of Marketing, Digital Media Products;*
Acting Director of Software Engineering
Developed business plans for digital audiovisual semiconductor chips. Managed team of over 50 software engineers in US and Korea for development of a media processor. Established strategic partnerships with Microsoft and IBM for media processor

From: 1990 **Cypress Semiconductor, Inc.**
To: 1993 San Jose, CA
Position: *Business Development Manager*
Founding member of new business unit chartered to develop a "video DSP". Jointly developed a complete business plan, and personally initiated and developed relationships with Philips, Sun Microsystems, Apple Computers and IBM. Chief architect for this early media DSP design, capable of complete MPEG1 decode in real time. (Fully validated by cycle-accurate simulation). Managed R&D team of 10 hardware and software engineers.

Head of US Delegation to MPEG, 1991 to 1992. Chief Editor of the MPEG1 standard. Technical Expert for establishing the

MPEGLA Patent Licensing Pool.

From: 1988 **Sun Microsystems, Inc.**
To: 1990 Mountain View, CA
Position: *Program Manager*
Developed requirements and specifications for real-time imaging system. Managed a team of 20 engineers to develop the architecture and high-level design. Interfaced with two key customers – Philips Medical Systems and Lockheed. Developed design for single-board real-time medical and reconnaissance image display.

From: 1981 **International Imaging Systems, Zoran, Virtual Imaging**
To: 1988 Design and development of real-time image processing and display systems. Details available on request.

From: 1975 **Ford Aerospace & ESL (A Division of TRW)**
To: 1981 Details available on request.

Consulting History

Date 2023 **Intel**
To: Present
Duties: Consulting Expert

Date 2023 **Disney**
To: Present
Duties: Consulting Expert

Date 2023 **Samsung**
To: Present
Duties: Consultant

Date 2023 **Peloton**
To: Present
Duties: Consulting Expert in NEC matter

Date 2023 **Alps Alpine**
To: 2023
Duties: Consulting Expert in DivX matter

Date 2023 **Fish & Richardson**
To: Present
Duties: Consultant

Date	2023	**Oppo**
To:	Present	
	Duties:	Consulting Expert on speech processing in Nokia matter
Date	2022	**Samsung**
To:	2023	
	Duties:	Testifying Expert on speech processing in Jawbone matter
Date	2022	**Asus, Lenovo, MSI**
To:	2023	
	Duties:	Consulting Expert in VideoLabs matter
Date	2022	**Google**
To:	2023	
	Duties:	Consulting Expert on speech processing in Jawbone matter
Date	2022	**Starz**
To:	Present	
	Duties:	Consulting Expert in VideoLabs matter
Date	2022	**Meta Platforms (Facebook)**
To:	Present	
	Duties:	Consulting Expert in VideShare matter
Date	2022	**Oppo**
To:	Present	
	Duties:	Consulting Expert in InterDigital matter
Date	2022	**Apple**
To:	2023	
	Duties:	Consulting Expert on speech processing in Jawbone matter
Date	2021	**Verkada**
To:	2022	
	Duties:	Testifying Expert in Motorola Solutions matter
Date	2021	**Facebook**
To:	2022	
	Duties:	Consulting Expert in EyesMatch matter
Date	2021	**Videoconferencing company**
To:	2023	
	Duties:	Testifying Expert
Date	2021	**Canon**

To: 2022
Duties: Consulting Expert in WSOU Investments/Brazos Licensing matter.

Date 2021 **Axis**
Duties: Consulting Expert

Date 2021 **nVIDIA**
To: 2022
Duties: Consultant

Date 2020 **Xiaomi**
To: 2021
Duties: Consulting Expert in InterDigital matter

Date 2020 **LG**
To: 2021
Duties: Consulting Expert DivX matter

Date 2020 **Vizio**
To: 2023
Duties: Consulting Expert VDPP matter

Date 2020 **Netflix**
To: 2022
Duties: Consultant

Date 2020 **Oppo**
To: Present
Duties: Consultant

Date 2020 **IdeaHub**
To: Present
Duties: Preparation of declaration for Inter Partes Review proceedings. (Unified Patents matter)

Date 2019 **Google**
To: 2021
Duties: Preparation of declarations for Inter Partes Review proceedings (PMC matter)

Date 2019 **Google**
To: 2021
Duties: Consulting Expert (Multiple projects)

Date 2019 **LG**
To: 2020

Duties: Preparation of declarations for Inter Partes Review proceedings. (Uniloc matter)

Date 2019 To: 2021 **Klarquist, Sparkman**
Duties: Consulting Expert (Multiple projects)

Date 2019 To: 2021 **Netflix, Hulu**
Duties: Preparation of declarations for Inter Partes Review proceedings. (DivX matter)

Date 2019 **MediaTek**
Duties: Consulting Expert in American Patents matter

Date 2019 **AT&T**
Duties: Consulting Expert

Date 2019 To: 2021 **KAIST/KBS**
Duties: Consulting Expert for Inter Partes Review proceedings. (Unified Patents matter)

Date 2019 To: 2020 **Vimeo**
Duties: Preparation of declarations for Inter Partes Review proceedings. (BT matter)

Date 2019 **Apple**
Duties: Preparation of declarations for Inter Partes Review proceedings. (Red.com matter)

Date 2019 To: 2021 **Adobe**
Duties: Preparation of declarations for Inter Partes Review proceedings and consulting expert. (Realtime matter)

Date 2018 To: 2019 **Toshiba**
Duties: Testifying expert concerning valuation of essential patents for ATSC standards

Date 2018 **Hisense**
Duties: Analysis of essential patents for AAC standards

Date 2018 **HTC**

To: 2020
Duties: Analysis of essential patents for the H.265 standard

Date 2018 **Cisco**
To: 2020
Duties: Consulting expert in Realtime matter

Date 2017 **Dish Network**
To: 2023
Duties: Consulting expert in ClearPlay matter

Date 2017 **Apple**
To: 2019
Duties: Preparation of declarations for Inter Partes Review proceedings. (Uniloc matter)

Date 2017 **Dish Network**
To: 2020
Duties: Testifying expert in Realtime matter

Date 2017 **CustomPlay**
To: 2020
Duties: Preparation of declaration for summary judgment in Amazon case.

Date 2017 **Vizio, Funai, LG, MediaTek, MStar**
Duties: Testifying expert in Broadcom case.

Date 2017 **Apple**
Duties: Preparation of declarations for Inter Partes Review proceedings. (Nokia matter)

Date 2017 **Vizio**
Duties: Preparation of declarations for Inter Partes Review proceeding. (Lightside Technologies matter)

Date 2016 **Dell, Riverbed, EchoStar, Dish Network**
To: 2019
Duties: Testifying expert in Realtime matter

Date 2016 **Sharp, Vizio, ON**
To: 2018
Duties: Testifying expert in WiLAN matter

Date 2016 **Avid**
To: 2017
Duties: Testifying expert in Harmonic matter.

Date	2016	**Apple**
	Duties:	Testifying expert in PUMA matter.
Date	2016	**Vizio**
	Duties:	Testifying expert in PMC matter.
Date	2016	**US Dept. of Justice, Dept. of Homeland Security, DoD, FBI, NSA, & Others**
To:	2021	
	Duties:	Consulting expert in Discovery Patents (3rd Eye Surveillance) matter. Declarations in support of six Inter Partes Reviews.
Date	2015	**ST Micro**
To:	2016	
	Duties:	Consulting expert in Avago matter.
Date	2015	**AT&T**
	Duties:	Consulting expert in Raniere matter.
Date	2015	**Motorola**
To:	2016	
	Duties:	Consulting expert in PUMA matter.
Date	2015	**TPV**
To:	2016	
	Duties:	Consulting expert in Thomson licensing matter.
Date	2015	**Tyco (Exacq, Johnson Controls)**
To:	2019	
	Duties:	Consulting expert in JDS Technologies matter.
Date	2015	**Tyco**
	Duties:	Declaration in support of Inter Partes Review petition in Hawk Technology matter.
Date	2015	**Sceptre**
	Duties:	Expert reports in licensing matter concerning MPEGLA MPEG2 pool patents.
Date	2015	**Samsung**
	Duties:	Consultant and fact witness in case asserting Samsung patents of which I am a named inventor, against NVidia.
Date	2015	**Nissim**
To:	2016	

	Duties:	Consultant expert for patent holder in 20th Century Fox, MGM, and Paramount cases concerning patents related to DVD navigation. Testified at Markman hearings.
Date	2015	**Nikon**
To:	Present	
	Duties:	Consultant.
Date	2015	**Humax**
	Duties:	Search and analysis of prior art.
Date	2015	**Apple**
	Duties:	Analysis of patent portfolio potentially essential for the H.264 standard.
Date	2014	**Haier**
To:	2018	
	Duties:	Analysis of patent portfolios for smart consumer devices.
Date	2014	**Cisco**
To:	2021	
	Duties:	Consultant.
Date	2014	**ZTE, Sony, LG, Samsung, Nokia, GoPro**
To:	2015	
	Duties:	Consulting expert.
Date	2014	**Tyco**
To:	2015	
	Duties:	Expert reports; declaration in support of Inter Partes Review in Trover matter.
Date	2013	**Humax**
	Duties:	Consultant.
Date	2014	**GE Licensing**
To:	2015	
	Duties:	Consultant.
Date	2014	**HikVision & Axis**
To:	2015	
	Duties:	Declaration in support of Inter Partes Review. Expert reports in Trover matter.
Date	2014	**Sharp**
To:	2016	
	Duties:	Declaration in support of Inter Partes Review in Wi-Lan matter.

Date	2013	**InterDigital**
To:	2015	
	Duties:	Consulting expert in support of licensing a patent portfolio.
Date	2013	**Apple**
	Duties:	Consulting expert in National Cheng Kung University matter.
Date	2013	**Acer, ASUS, TPV**
To:	2014	
	Duties:	Testifying expert in Florida Atlantic University matter.
Date	2013	**Toshiba**
To:	2014	
	Duties:	Testifying expert in WiLAN matter.
Date	2013	**Grass Valley Group**
	Duties:	Consulting expert for defense in FastVDO matter.
Date	2013	**TI**
To:	Present	
	Duties:	Consulting expert.
Date	2012	**Vizio**
	Duties:	Consulting expert in Innovus Prime matter.
Date	2012	**Haier & Shandong Provincial Government**
To:	2014	
	Duties:	Foreign expert advisor for developing and acquiring patent portfolios for innovative consumer products. Development of a patent pool for patents essential to standards for wireless power.
Date	2012	**Vizio**
To:	2014	
	Duties:	Consulting expert in MIT matter.
Date	2012	**Nokia**
To:	2013	
	Duties:	Consulting expert.
Date	2012	**TPV & Vizio**
To:	2013	
	Duties:	Testifying expert for defense in Hitachi matter.
Date	2012	**Samsung**
	Duties:	Consulting expert in Myport matter.

Date	2012	**Verizon Wireless (Cellco) & T-Mobile**
To:	2013	
	Duties:	Testifying expert for defense in Realtime Data matter.
Date	2011	**Apple**
	Duties:	Consulting expert in Technicolor matter.
Date	2012	**Microsoft**
To:	2014	
	Duties:	Consulting expert for plaintiff in Motorola matter.
Date	2012	**Apple & LG**
To:	2014	
	Duties:	Testifying expert for defense in MPT matter.
Date	2011	**Sanyo & Olympus**
	Duties:	Consulting expert for defense in FastVDO matter.
Date	2011	**Apple**
	Duties:	Consulting expert for defense in FastVDO matter.
Date	2011	**Sony**
	Duties:	Consulting expert for defense in FastVDO matter.
Date	2011	**Philips**
To:	2014	
	Duties:	Consulting expert for licensing essential patents.
Date	2011	**Apple**
	Duties:	Consulting expert for defense in MobileMediaIdeas matter.
Date	2011	**Video264Innovations**
	Duties:	Consulting expert.
Date	2011	**Nikon, Fujifilm & Panasonic**
	Duties:	Consulting expert for defense in FastVDO matter.
Date	2011	**Haier**
To:	2014	
	Duties:	Consultant for standards, patent pools and patent licensing.
Date	2011	**Susman Godfrey**
	Duties:	Consultant for patent analysis.
Date	2011	**Vizio**

	Duties:	Testifying expert for defense in MPT matter.
Date	2011	**Tivo**
	Duties:	Consulting expert.
Date	2011	**Nikon**
To:	2013	
	Duties:	Consulting expert for defense in MPT matter.
Date	2011	**Broadcom**
	Duties:	Consulting expert.
Date	2010	**Lionsgate Entertainment**
	Duties:	Consulting expert in MPEG licensing matter.
Date	2010	**Verizon**
To:	2012	
	Duties:	Testifying expert for defense in ActiveVideo Networks matter.
Date	2010	**Lenovo**
To:	2011	
	Duties:	Consulting expert for defense in licensor matter.
Date	2010	**Sonic, Cyberlink & Joint Defense Team**
	Duties:	Consulting expert for defense in Mediostream licensor matter.
Date	2010	**Wistron**
To:	2011	
	Duties:	Consulting expert for defense in Toshiba licensor matter.
Date	2010	**Panasonic, Pioneer**
To:	2011	
	Duties:	Consulting expert for defense in VES licensor matter.
Date	2010	**Zoran**
To:	2011	
	Duties:	Technical analysis of patents potentially related to video coding standards.
Date	2010	**Intravisual**
To:	2015	
	Duties:	Consulting expert for patent licensing.
Date	2009	**Apple**
	Duties:	Technical analysis of patents potentially related to video coding standards.

Date	2009	**SanDisk**
	Duties:	Consulting expert re Audio and Video coding patents
Date	2009	**Lenovo**
To:	2011	
	Duties:	Consulting expert for defense in MPEGLA licensor matter.
Date	2009	**Polycom**
To:	2010	
	Duties:	Consulting expert for defense in MPT matter.
Date	2009	**DirecTV**
To:	2011	
	Duties:	Consulting expert for defense in MPT matter.
Date	2009	**EchoStar**
To:	2010	
	Duties:	Consulting expert for defense in MPT matter.
Date	2009	**Vizio**
	Duties:	Consulting expert for defense in Sony matter.
Date	2009	**Vizio**
To:	2010	
	Duties:	Consulting expert for defense in LG matter.
Date	2009	**Vizio, TPV, Amtran**
To:	2010	
	Duties:	Technical report & video presentation to US Customs on design issues related to Funai matter. Testified in ITC hearing, March 2010.
Date	2008	**Humax (Korea)**
To:	2009	
	Duties:	Audio patent and prior art review.
Date	2008	**IC Media (Canada)**
To:	2009	
	Duties:	Design of digital signage.
Date	2008	**AVS Patent Pool Administration (China)**
To:	Present	
	Duties:	Co-Director, leading license negotiations among domestic and multinational licensors.

Date	2008	**DirecTV**
	Duties:	Prior art search for DirecTV's appeal against Finisar.
Date	2008	**Pure Digital**
	Duties:	Prior art research and analysis.
Date	2008	**Wragge (UK)**
	Duties:	Prior art review for two video coding patents.
Date	2008	**Microsoft**
	Duties:	Extensive non-infringement analysis for patents asserted by Multimedia Patent Trust (MPT).
Date	2008	**iPotential**
To:	2010	
	Duties:	Technical analysis of patents potentially related to video coding standards.
Date	2008	**Alba (UK) aka Harvard Research**
To:	2009	
	Duties:	General education on essential patents, licensing, prior art related to the MPEG2 video standard.
Date	2008	**Philips (Holland)**
	Duties:	Review of patents for essentiality.
Date	2008	**Proview**
	Duties:	Prior art search for TV display features.
Date	2008	**Nissim**
To:	2014	
	Duties:	Consultant expert for plaintiff in Time-Warner case concerning patents related to DVD navigation.
Date	2008	**Comcast**
	Duties:	Technical analysis of MPEG2 systems, DSM-CC, and carousel operation in the cable TV network environment. Contribution to expert's report in Comcast's successful litigation against Finisar.
Date	2007	**Sun Microsystems**
To:	2009	
	Duties:	Chief architect of royalty-free video codec: OMS Video. Extensive supporting patent analysis and technical publication analysis for prior art review.
Date	2008	**SanDisk**

Duties: Technical analysis of patents and prior art searching for audio coding.

Date 2008 **Stammberger (Munich)**
Duties: Technical analysis of patents potentially related to video coding standards.

Date 2008 **Trigem America Liquidating Trust**
Duties: Preparation of expert reports concerning litigation between Toshiba and Trigem.

Date 2007 **Susman-Godfrey**
Duties: Technical analysis of patents potentially related to video coding standards.

Date: 2007 **Wong-Cabello**
Duties: Technical analysis of patents potentially related to video coding standards.

Date: 2007 **Sisvel**
Duties: Technical assistance in licensing audio patents to a third party.

Date: 2007 **Quanta**
Duties: Technical assistance in litigation related to DVD.

Date: 2006 **CCTV (China Central TV)**
Duties: Technical analysis of patents potentially related to MPEG2, H.264, AVS and VC-1 video coding standards and MPEG-AAC and Dolby audio coding standards.

Date: 2006 **MediaTek**
Duties: Technical analysis of MediaTek patents potentially related to video coding standards.

Date: 2006 **Alcatel**
Duties: Technical analysis of Alcatel patents potentially related to video coding standards.

Date: 2006 **Motorola**
Duties: Analysis of technologies contributed to the H.264 standard.

Date: 2005 **Nokia**
Duties: Analysis of technologies contributed to the H.264 standard.

Date: 2005 **Avid**
Duties: Technical analysis of patents potentially related to coding standards.

Date: 2005 **IBM**
Duties: Analysis of technologies contributed to the H.264 standard.

Date: 2005 **HP**
Duties: Analysis of selected audio coding patents.

Date: 2005 **ComVentures**
Duties: Due diligence review of a start-up company in the video semiconductor business.

Date: 2005 **nVidia**
Duties: Prior art search for a set of third-party patents.

Date: 2004 **Microsoft**
Duties:
- Working with a major financial services company, developed a procurement model for managing licensing costs.
- Assisting development of non-infringement positions for a set of patents. (Not in suit).

From: 2004 **SAGEM (France)**
To: 2005
Duties: Technical analysis of potential infringement by SAGEM of a set of third-party patents.

From: 2004 **Polycom Inc.**
To: 2005
Duties: Technical analysis of Polycom patents potentially related to video coding standards.

From: 2004 **Sony Corp.**
To: 2006
Duties:
- Technical analysis of potential infringement by Sony of a set of third-party patents. The parties settled without litigation.
- Analysis of a third-party patent per Sony's direction.

Date: 2004 **On2 Inc**
Duties: Delivery of the comprehensive set of reports on IPR potentially related to the emerging H.264 standard.

Date: 2004 **Matsushita Avionics**
Duties: Technical analysis of potential infringement of Matsushita patents by a third party.

Date: 2004 **Connex Inc.**
Duties: Teaching the details of key complex algorithms in the H.264 standard.

Date: 2004 **DoCoMo (Japan)**
Duties: Delivery of the comprehensive set of reports on IPR potentially related to the emerging H.264 standard.

From: 2004 **DivX Inc.**
To: 2006
Duties: Analysis of technologies contributed to the H.264 standard

Date: 2004 **Cues, Inc**
Duties: Assisted evaluation of infringement by Cues' products of a patent asserted by a third party. The parties settled without litigation.

From: 2003 **GE Licensing**
To: 2004
Duties: Working with a major financial services company, developed a business, market and financial model for valuation of a portfolio of patents through their expiration.

From: 2003 **Institute of Computing Technology, Chinese Academy of Sciences**
To: Present
Duties:

- Preparation of IPR Report for IPR potentially related to the AVS Video standard. This effort involved review of over 2500 abstracts and over 450 patents.
- IPR Subgroup Chairman of AVS. Formed an IPR Experts group to establish a legal foundation for AVS IPR. This group comprised approximately 20 attorneys and business development managers from eight multinational companies representing the PC, consumer, semiconductor and communication industries. (Broadcom, IBM, Intel, Matsushita, Microsoft, Nokia, Sony, Sun Microsystems). The group drafted a member agreement, bylaws and a formal IPR policy governing licensing commitments, disclosure obligations, and protection of license holder rights. AVS Members approved these documents in September 2004.
- Co-Director of AVS Patent Pool. Leading the drafting and negotiation of patent pool management and licensing agreements.
- Adjunct Professor, supervising a graduate student project on deinterlacing algorithm development.

Date: 2003 **Yahoo**
Duties: Prior art search to provide background information per Yahoo's request.

Date: 2002 **Gateway, Inc.**
To: 2007
Duties: Extensive prior art search and assistance with claim construction in a litigation matter with Lucent Technologies.

From: 2002 **Apple Computer**
To: 2007

Duties:
- Technical analysis of Apple patents potentially related to H.264.
- Prior art search for various patents per Apple's request.

Date: 2002 **Siemens (Germany)**

Duties:
- Technical analysis of Siemens patents potentially related to H.264.
- Delivery of the comprehensive set of reports on IPR potentially related to the emerging H.264 standard.

Date: 2002 **JVT Committee (Apple, Cisco, Nokia, Polycom, Sun Microsystems, Tandberg, Teles, Texas Instruments, UBVideo, VideoLocus)**

Duties: Developed a comprehensive set of reports on IPR potentially related to the emerging H.264 standard. The reports included a technical review of legacy and new patents for video coding, and analysis of the patent statements provided by all companies whose contributions were adopted into H.264.

Date 2002 **Intervideo**

Duties: Advised on market opportunities in the emerging MPEG4 marketplace.

Date: 2001 **Proskauer Rose LLP**

Duties: Provided background support in MPEGLA's (successful) effort to license MPEG2 to the major PC manufacturers.

Date 2001 **Pixonics**

Duties: Developed marketing plan and marketing support materials for this incubator-stage company.

Date 2001 **Eltron, (Taiwan)**

Duties: Provided overview of the digital video semiconductor market.

Date 1999 **nDSP Corporation**

Duties: Drafted the sales and marketing plan for this early-stage company. Joined nDSP full-time.

Date: 1998 **IBM Corp.**

Duties: Assisted with participation in the ATSC DASE (datacasting) standard.

Date 1998 **Spruce Technologies**

Duties: Assisted with transition of Cagent MPEG encoder product after it was sold to Spruce.

From: 1997 **Samsung Advanced Institute of Technology**
To: 1999

	Duties:	Supported Samsung researchers in MPEG4 standard development. Led effort to provide error-resilient 3D-mesh coding.
Date	1997	**MPEGLA LLC**
	Duties:	Review of opportunity for an MPEG4 patent pool
From:	1993	**CableLabs**
To:	1994	
	Duties:	Teamed with a patent attorney to develop the initial essential patent list for MPEG2. Reviewed approximately 10,000 abstracts and 1,000 patents for the MPEG2 Video and MPEG2 Systems standards. This effort led to the MPEGLA patent pool.

Litigation Support Experience

Quinn Emanuel Urquhart & Sullivan, LLP, San Francisco, CA

Case	Motorola Solutions vs. Verkada, **Investigation No. 337-TA-1281**
Project:	Expert report, deposition and trial testimony on invalidity of Motorola patents.
Status:	Final determination found Verkada not infringed
Filed:	August, 2021
Location:	United States International Trade Commission, Washington DC

Orrick, Herrington & Sutcliffe, LLP, New York, NY

Case	ClearPlay vs. Dish Network & EchoStar Technologies, **Case No .: 2:14-cv-00191**
Project:	Expert report, deposition and trial testimony on invalidity of ClearPlay patents.
Status:	ClearPlay patents not infringed
Filed:	March 13, 2014
Location:	United States District Court for the District of Utah

Akin Gump, Fish & Richardson, Finnegan, Baker Hostetler, Washington, DC

Case	Broadcom vs. Vizio, LG, Funai, MediaTek, MStar, **Investigation No. 337-TA-1047**
Project:	Expert report and deposition on non-infringement of Broadcom's patent.
Status:	Final Determination in favor of Respondants.

Jones Day, Cleveland, OH

Case	Avid Technology vs. Harmonic, **Case No. C.A. No. 12-627-GMS**
Project:	Expert reports and deposition on infringement of Avid's patent.

Status: Parties settled before trial.

Haynes and Boone, Dallas, TX

Case Realtime vs. Riverbed, **Case No. 6:1S-CV-463-RWS-JDL**

Project: Expert report, deposition and trial testimony (E. District Texas) on invalidity of Realtime patent.

Status: Jury found Realtime patent invalid at trial.

Akin Gump, LLP, Irvine, CA

Case Personalized Media Communications "PMC" vs. TPV et al, **Case No. 2:15-cv-01366-JRG-RSP**

Project: Declaration in support of claim construction brief.

Status: Parties settled.

Feinberg, Day, LLP, Menlo Park, CA

Case Parthenon Unified Memory Architecture "PUMA" vs. Apple, **Case No. 9:12-cv-80701**

Project: Expert report and deposition concerning unified memory architecture.

Status: Trial stayed at request of PUMA. Parties settled.

Carey, Rodriguez, LLP, Miami

Case *Twentieth Century Fox Home Entertainment, LLC, Paramount Pictures Corp., vs. Nissim Corp., **Case No. 14-81349/813450-cv-MARRA**

Project: Expert witness for patent owner in counterclaims for infringement. Declaration and expert testimony at Markman Hearings concerning DVD standards essential patents.

Status: Parties settled before trial.

*Nissim asserted its patents against Twentieth Century Fox and Paramount. The latter filed a complaint seeking a declaratory judgment of non-infringement and invalidity.

TechKnowledge Law Group, Turner Boyd LLP & O'Melveny & Myers LLP, Los Angeles,

Case Florida Atlantic University Research Corporation vs. Acer, ASUS & TPV, **Case No. 9:12-cv-80701**

Project: Expert testimony at Markman Hearings concerning scan converter design. Expert reports and deposition testimony.

Status: Parties settled before trial.

Finnegan, Henderson, Farabow, Garrett & Dunner, LLP

Case WiLAN vs. Toshiba, **Case No. 1:12-Civ-23744**

Project: Expert reports & deposition testimony concerning digital television design.

Status: Parties settled before trial.

O'Melveny & Myers LLP, Los Angeles & Akin Gump LLP, Dallas

Case Hitachi vs. TPV, **Case No. 2:10-CV-260-JRG**
Project: Expert reports, depositions & trial testimony (E. District Texas) concerning digital television design.
Status: Jury found no infringement of Hitachi's patents by TPV and found Hitachi's patents invalid. (Partially reversed by JMOL)

Fish & Richardson P.C. San Diego
Case Multimedia Patent Trust vs. Apple & LG, **Case No. 10-cv-2618 H**
Project: Expert report, & deposition testimony concerning development of technology, standards and patents for video coding**.**
Status: Jury found no infringement of MPT's patents and found MPT's patents invalid.

Gibson Dunn LLP, Palo Alto
Case Realtime Data vs. Verizon Wireless & T-Mobile, **Case No. 6:10-cv-00493-LED**
Project: Expert reports, depositions and testifying expert in jury trial (E. District Texas) concerning infringement and validity of patents related to data transmission.
Status: Jury found no infringement of Realtime Data's patents by T-Mobile, and found Realtime Data's patents invalid.

O'Melveny & Myers LLP, San Francisco
Case MobileMediaIdeas vs. Apple, **Case No. 10-258-SLR**
Project: Expert reports and deposition, concerning infringement and validity of patents related to MPEG Audio Layer III ("mp3") coding.
Status: Trial bifurcated.

Jones Day, Cleveland
Case Multimedia Patent Trust Vs. Vizio, **Case No. 09-CV-0278-H (CAB)**
Project: Expert report, concerning infringement of patents related to H.264 video coding. (Slated for deposition and jury trial)
Status: Parties settled on the day before my deposition.

Kellog, Huber, et al, Washington, DC
Case Active Video Vs. Verizon, No. 2:10-cv-00248-RAJ-FBS; 2011
Project: Expert report, deposition and testifying expert in jury trial concerning infringement of patents related to video-on-demand
Status: Jury finding of infringement with significantly reduced damages and no finding of willful infringement.

Jones Day, Washington, DC
Case Funai Vs. Vizio, et al, ITC Investigation No. 337-TA-617; 2010
Project: Expert report, deposition and testifying expert in ITC hearing concerning infringement of a patent related to ATSC broadcast standards
Status: Parties settled after the hearing following reports adverse to complainant.

Wilson Sonsini, Goodrich and Rosati, Palo Alto, CA.

Case Project: Terayon vs. RGB Networks; 2007
Expert report for defendant in a contract dispute alleging violation of a non-compete agreement.

Status: Mediation hearing resolved the dispute to the satisfaction of both parties.

Wilmer Cutler Pickering Hale and Dorr, Boston, MA

Case Project: Qualcomm Inc. vs. Broadcom Corp. No. 05 CV 1958 B (BLM); 2007
Expert report and deposition on behalf of Broadcom against assertions of infringement of patents concerning video encoding and decoding, and on Qualcomm's compliance with the policies and procedures for IPR policy in the H.264 standards committee (JVT of ITU-ISO/IEC).

Status: Broadcom found not guilty of infringing Qualcomm's patents. The patents were determined to be not essential for implementing the H.264 standard. Qualcomm found guilty of inequitable behavior in the manner of their participation in the H.264 standards committee. Qualcomm's patents held unenforceable against H.264.

Greenberg Glusker Fields Claman Machtinger & Kinsella.

Case Project: DTS vs. MediaTek; 2005
Expert report for defendant in a contract dispute related to hacking into semiconductor chips to enable functionality for which a license fee was payable.

Status: Mediation hearing resolved the dispute to the satisfaction of both parties. The Mediator personally thanked me for the clarity of my report, which covered technical, business and licensing issues.

Arvay Finley Barristers, Victoria, BC, Canada.

Case Project: AVT Audio Visual Telecommunications vs. University of British Columbia; 2005
Expert report and testimony on behalf of AVT in a contract dispute related to mobile video communication including failure to disclose intellectual property.

Status: Arbitration hearing resulted in adverse ruling to AVT.

Thelen Reid & Priest, San Jose, CA.

Case Project: Toshiba Corp. vs. Trigem Computer Inc. & Trigem America Corp. Case No. CV-03-4558-GHK(AJWx); 2005
Expert report on behalf of Trigem regarding invalidity of patents relating to video and sub-picture data in multimedia computer systems.

Status: Suspended due to insolvency of Trigem.

Morrison & Foerster LLP, San Francisco, CA.

Case	Tivo Inc. vs. Echostar Communications Corp., Echostar DBS Corp., Echostar Technologies Corp ,& EchoStar LLC, Case No. 2-04CV-01; 2005
Project:	Expert report and deposition on behalf of Echostar against assertions of infringement of a patent concerning personal video recorders (PVR).
Status:	Adverse ruling to Echostar.

Pinsent Curtis Biddle, Leeds, UK

Case	Thomson Licensing S.A. and Deutsche Thomson Brandt GmbH vs. Pace Micro Technology PLC. Case No. HC 2000 No. 1584; 2001
Project:	Expert report and slated to testify on behalf of Pace arguing invalidity of patent and defending against assertions infringement of a patent concerning interlaced video coding.
Status:	Parties agreed to settlement on the second day of trial. Settlement terms were very favorable to defendant, and shortly after the trial, Thomson joined the MPEGLA patent pool.

Education

1974	University of Sussex, England	Ph.D., Applied Sciences (EE/CS) Thesis on "Orthogonal Transform Coding of Still and Moving Pictures". All research performed in residence at the Image Processing Institute, USC Los Angeles, CA.
1970	University of Liverpool, England	Bachelor of Engineering with Honours, Physical Electronics

Publications (Partial List)

C Reader, "Orthogonal Transform Coding of Still and Moving Pictures", Ph.D. thesis, U. Sussex, England, 1973.

C. Reader, "Intraframe and Interframe Adaptive Transform Coding." SPIE Vol. 66, pp. 108-117, *Efficient Transmission of Pictorial Information* (1975).

C. Reader, W.H. Chen, "Local Retransmission of Compressed Imagery Data", SPIE Vol. 149 pp. 196-204, *Applications of Digital Image Processing* (1978).

L. Hubble, C. Reader, "State of the Art in Image Display Systems", SPIE Vol. 199, pp 2-8, *Advances in Display Technology* (1979).

C. Reader, W. D. Flanagan, "Design Considerations for Real-Time Image Processing", SPIE Vol. 180, *Real-Time Signal Processing II,* (1979).

C. Reader, L. Hubble, "Trends in Image Display Systems", Proc. IEEE, Vol. 69, No. 5, pp. 606-614, (1981).

J. Adams, C. Patton, C. Reader, D. Zamora, "Hardware for Geometric Warping", Electronic Imaging, April 1984.

Digital Image Processing Techniques (Computational Techniques), Michael P. Ekstrom (Editor), Chapter describing hardware for real-time image processing and display systems, Academic Press, 1984, pp. 289-360.

C. Reader, et al, "A New Architecture for Real-Time Image Processing," SPIE Vol. 534, pp. 72-78, *Architectures and Algorithms for Digital Image Processing II* (1985).

B. Thacker, R. Rinaldi, C. Reader, "Multiwindow Displays of Text, Graphics and Images", SPIE Vol. 757, pp. 104-110, *Methods of Handling and Processing Imagery* (1987).

Keynote opening speech at IEEE Conference on Image Processing, 1994.

C. Reader, "MPEG4: Coding for Content, Interactivity, and Universal Accessibility," Optical Engineering, Vol. 35, No. 1 pp. 104-108 (1996).

C. Reader, P. Schirling, A. Puri, MPEG Tutorial paper at IEC – NCF/Infovision '97.

O. Avaro, P.A. Chou, A. Eleftheriadis, C. Herpel, C. Reader, J. Signes, "The MPEG4 Systems and Description Languages: a Way Ahead in Audio Visual Information Representation", Signal Processing: Image Communication, Vol. 9, No. 4, pp. 385-431 (1997).

C Reader, "What MPEG-4 means to me", Sig. Proc.: Image Comm. 9(4): 467, 1997

MPEG Video Compression Standard, Edited by Mitchell, Pennebaker, Fogg, Le Gall. Chapman & Hall, 1997. Chapter describing the process of establishing the MPEGLA patent pool, Chapter 16, *MPEG Patents,* pp.357-362.

W Gao, C Reader, F Wu, Y He, L Yu, H Lu, S Yang, T Huang, X Pan, "AVS - The Chinese Next-Generation Video Coding Standard", Proc. NAB Conf., 1994.

C Reader, "Origins of the performance of H.264/AVC: an account of the development of H.263 and H.264 coding tools", SPIE Vol. 5909, pp59090W-1-8 Applications of Digital Image Processing XXVIII (2005).

C Reader, “AVS Intellectual Property Rights (IPR) Policy, J. Comput. Sci. & Technol., Co. 21, No. 3 (May 2006).

Q Huang, W Gao, D Zhao, C Reader, “A Real-Time Video Deinterlacing Scheme for MPEG-2 to AVS Transcoding”, Advances in Multimedia Information Processing - PCM 2006, Vol. 4261/2006, Springer Berlin / Heidelberg.

W Gao, S Ma, C Reader, “An End-to-End Application System of AVS: AVS-IPTV in China”. PCM 2007: 50-57

C Reader, “Technical design & IPR analysis for royalty-free video codecs”. PCS 2010: 102-105

J Chen, F Xu, Y He, J D Villasenor, Y Han, Y Xu, Y Rong, C Reader, J Wen, “Efficient Video Coding Using Legacy Algorithmic Approaches”. IEEE Trans. Multimedia 14(1): 111-120 (2012)

W Gao, T Huang, C Reader, W Dou, X Chen, "IEEE Standards for Advanced Audio and Video Coding in Emerging Applications", Computer, vol.47, no. 5, pp. 81-83, May 2014.

Ma S, Huang T, Reader C, Gao W, AVS2-Making video coding smarter [Standards in a Nutshell], IEEE Signal Processing Magazine, vol. 32, no. 2, pp. 172 - 182, 2015.

Wang R, Huang T, Park S-H, Kim J-G, Jang E S, Reader C, Gao W, The MPEG Internet Video-Coding Standard [Standards in a Nutshell], IEEE Signal Processing Magazine, Vol. 33, No. 5, pp. 164-172, Sep. 2016.

Reader C, Patent Landscape for Royalty-Free Video Coding, SPIE Vol. 9971, Sep., 2016

Patents

Patent Number	Date Issued	Title
6,192,073	2000	Methods and apparatus for processing video data
5,845,112	2000	Method for performing dead-zone quantization in a single processor instruction.

Academic Positions

Taught “early bird” classes at Santa Clara University in Image Processing and Digital Signal Processing

Adjunct Professor of the National Engineering Laboratory for Video Technology, in the Computer Science Department at Peking University, Beijing, China.

Professional Associations and Achievements

- ISO/IEC Certificate of appreciation for development of the MPEG4 standard.
- Senior Member IEEE.
- Member SPIE.
- Member ACM.
- Member AES.
- Member SMPTE.

Contact Information

- 1654 Hillstone Ave.
  Escondido
  CA 92029
- 408 867 4884 Mobile-Office
- cliffreader Skype
- CliffReader WeChat
- cliff@reader.com
- www.reader.com