US 20020069417A1

(19) United States

(12) Patent Application Publication

(10) Pub. No.: US 2002/0069417 A1

(43) Pub. Date: Jun. 6, 2002

Kliger et al.

(54) HOME NETWORK SYSTEM AND METHOD

(76) Inventors: **Avi Kliger**, Givatayim (IL); **Rami Kopelman**, Lexington, MA (US); **Nachum Avishay**, Rehovot (IL); **Alon Shtern**, Magshimim (IL); **Amir Wassermann**, Kiriat One (IL)

Correspondence Address:
TESTA, HURWITZ & THIBEAULT, LLP
HIGH STREET TOWER
125 HIGH STREET
BOSTON, MA 02110 (US)

(21) Appl. No.: **09/943,424**

(22) Filed: **Aug. 30, 2001**

Related U.S. Application Data

(63) Non-provisional of provisional application No. 60/229,263, filed on Aug. 30, 2000. Non-provisional of provisional application No. 60/230,110, filed on Sep. 5, 2000. Non-provisional of provisional application No. 60/275,060, filed on Mar. 12, 2001. Non-provisional of provisional application No. 60/291,130, filed on May 15, 2001. Non-provisional of provisional application No. 60/297,304, filed on Jun. 11, 2001.

Publication Classification

(51) **Int. Cl.**[7] **H04N 7/18**

(52) **U.S. Cl.** **725/78**; 725/74

(57) **ABSTRACT**

A home network, in one embodiment including a home wiring system; a demarcation point unit in electrical communication with the home wiring system; and a home network module in electrical communication with the home wiring system. The home network module is adapted for connection to a home electronic device. The demarcation point unit passes data to and receives data from the home electronic device through the home network module.

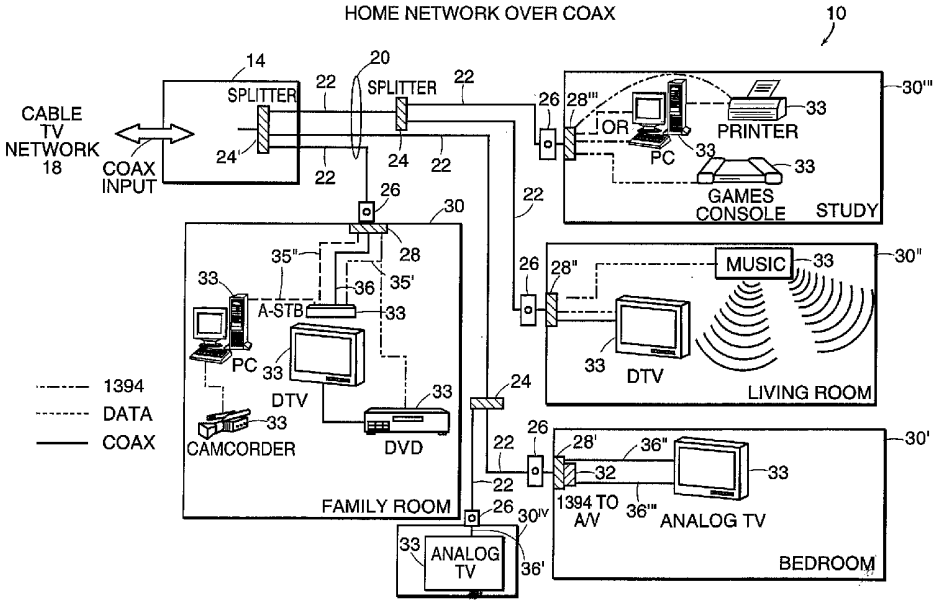

ENTROPIC EXHIBIT 2004
DISH v. Entropic
IPR2024-00373

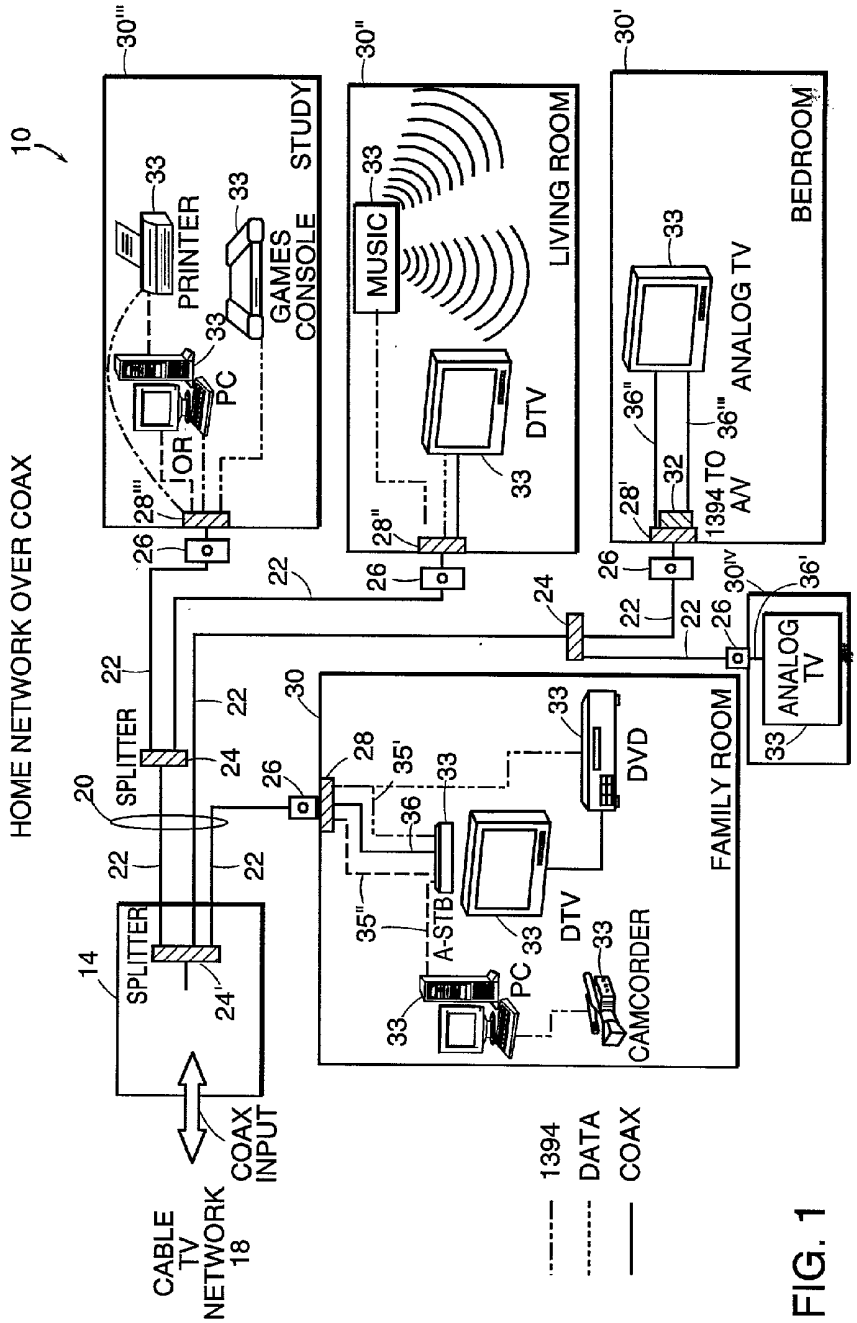
HOME NETWORK OVER COAX
10
STUDY
PRINTER
GAMES CONSOLE
PC
OR
LIVING ROOM
MUSIC
DTV
BEDROOM
ANALOG TV
1394 TO A/V
FAMILY ROOM
ANALOG TV
DVD
DTV
A-STB
PC
CAMCORDER
SPLITTER
SPLITTER
CABLE TV NETWORK 18
COAX INPUT
1394
DATA
COAX

FIG. 1

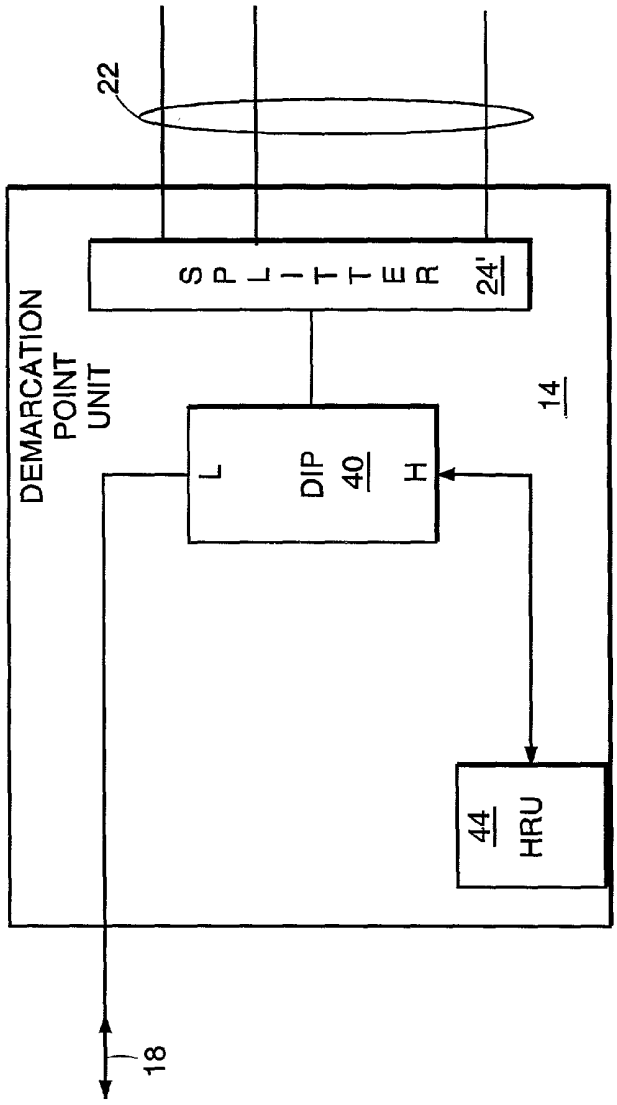

FIG. 2

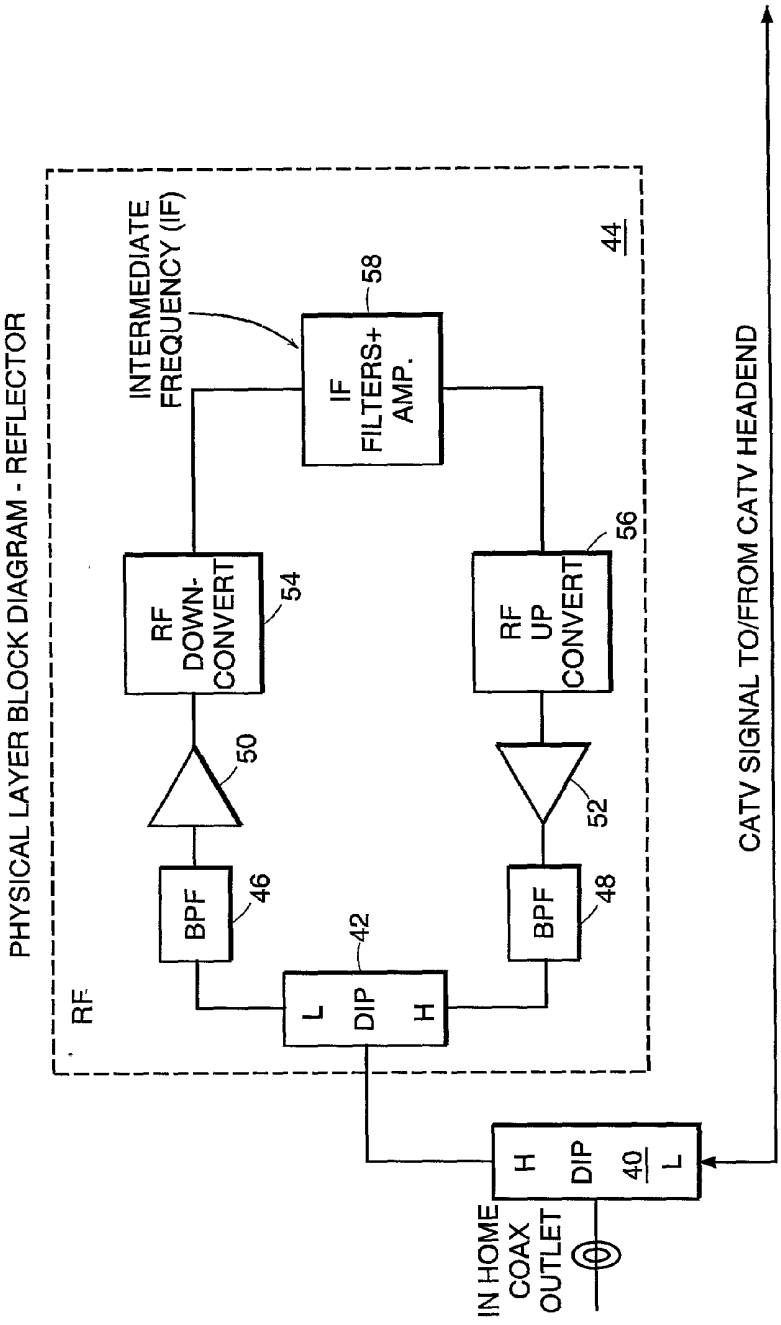
PHYSICAL LAYER BLOCK DIAGRAM - REFLECTOR
RF
44
INTERMEDIATE FREQUENCY (IF)
IF FILTERS+ AMP.
58
RF DOWN-CONVERT
54
RF UP CONVERT
56
50
52
BPF
46
BPF
48
L
DIP
H
42
H
DIP
40
L
IN HOME COAX OUTLET
CATV SIGNAL TO/FROM CATV HEADEND

FIG. 2A

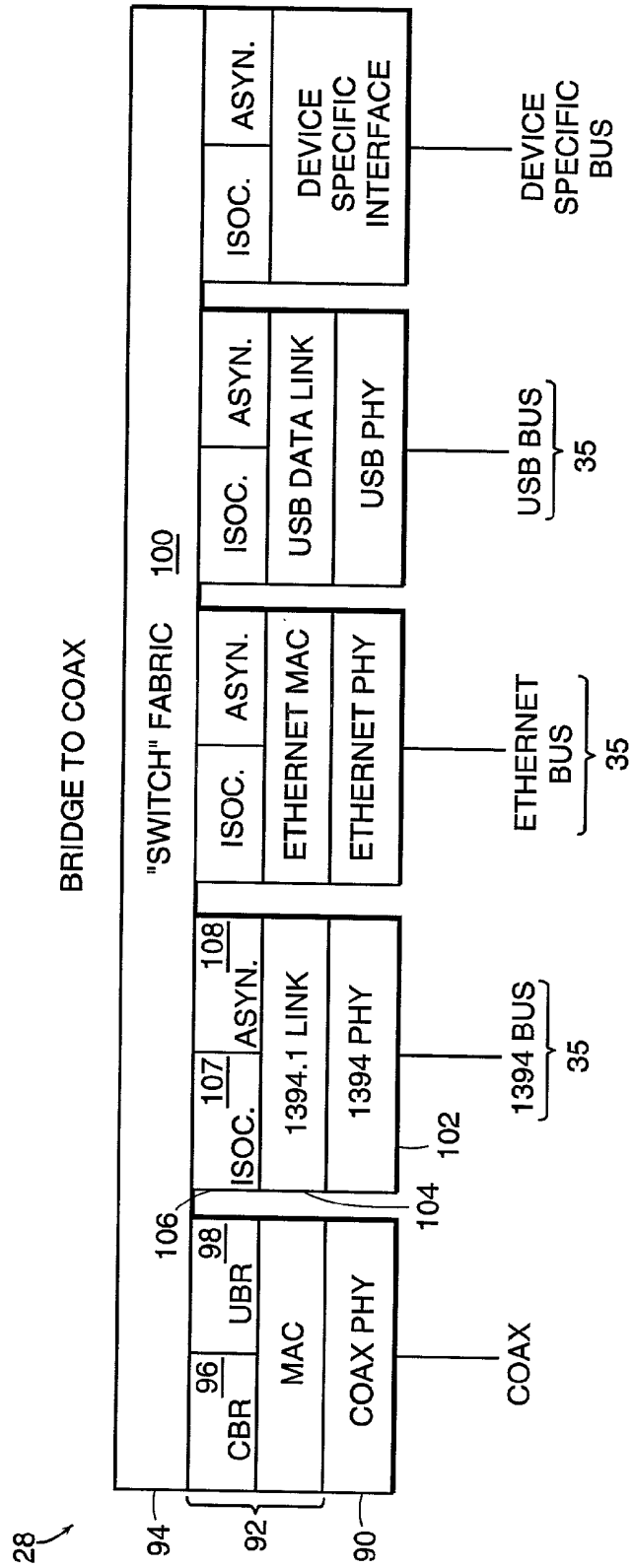
BRIDGE TO COAX
"SWITCH" FABRIC
100
28
94
92
90
CBR
96
UBR
98
MAC
COAX PHY
COAX
106
ISOC.
107
ASYN.
108
1394.1 LINK
1394 PHY
1394 BUS
35
102
104
ISOC.
ASYN.
ETHERNET MAC
ETHERNET PHY
ETHERNET BUS
35
ISOC.
ASYN.
USB DATA LINK
USB PHY
USB BUS
35
ISOC.
ASYN.
DEVICE SPECIFIC INTERFACE
DEVICE SPECIFIC BUS

FIG. 3

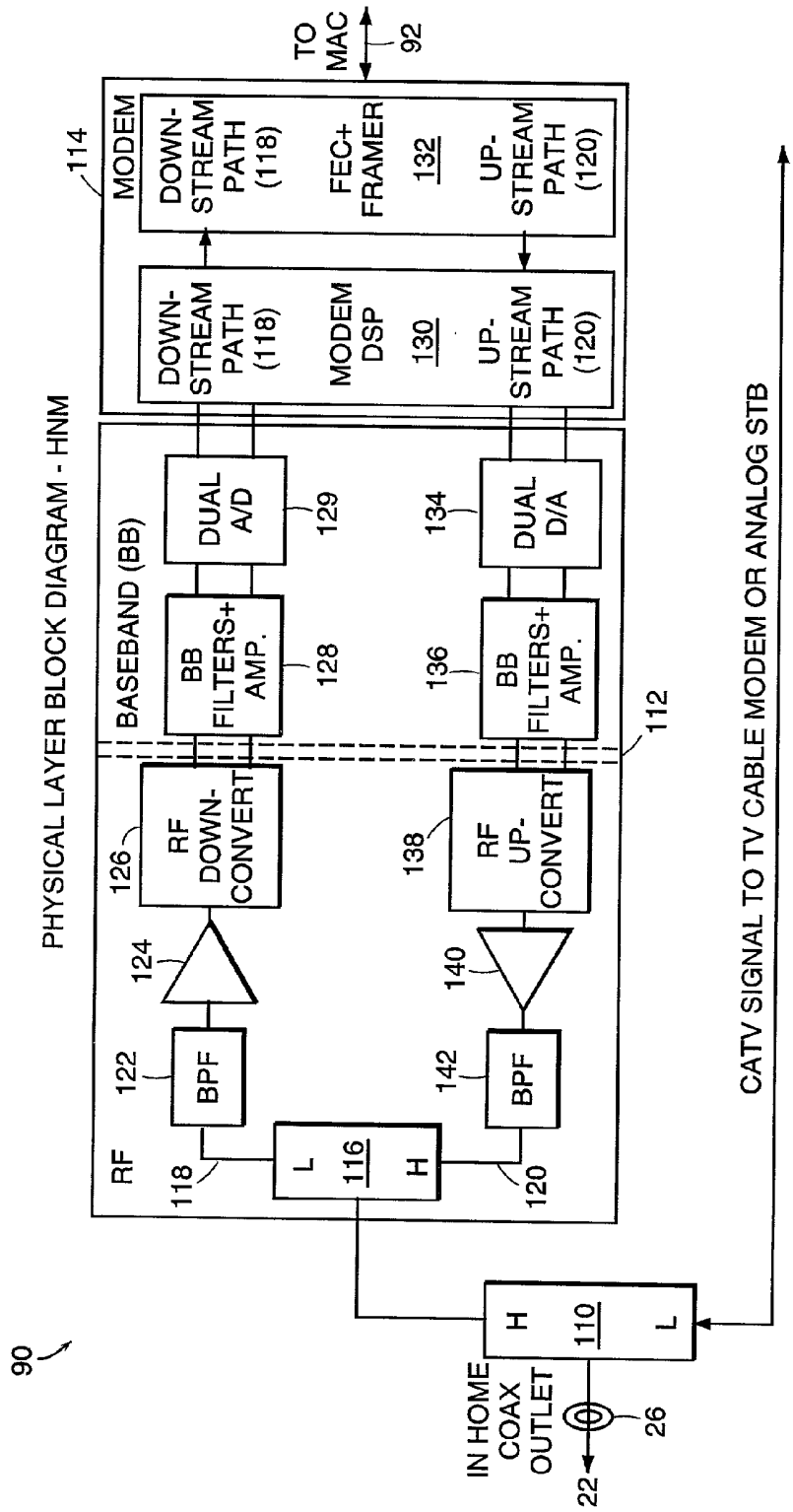
PHYSICAL LAYER BLOCK DIAGRAM - HNM
90
TO MAC
92
114
MODEM
DOWN-STREAM PATH (118)
FEC+ FRAMER
132
UP-STREAM PATH (120)
DOWN-STREAM PATH (118)
MODEM DSP
130
UP-STREAM PATH (120)
BASEBAND (BB)
DUAL A/D
129
DUAL D/A
134
BB FILTERS+ AMP.
128
BB FILTERS+ AMP.
136
112
RF DOWN-CONVERT
126
RF UP-CONVERT
138
124
140
BPF
122
BPF
142
RF
118
L
116
H
120
CATV SIGNAL TO TV CABLE MODEM OR ANALOG STB
H
110
L
IN HOME COAX OUTLET
26
22

FIG. 4

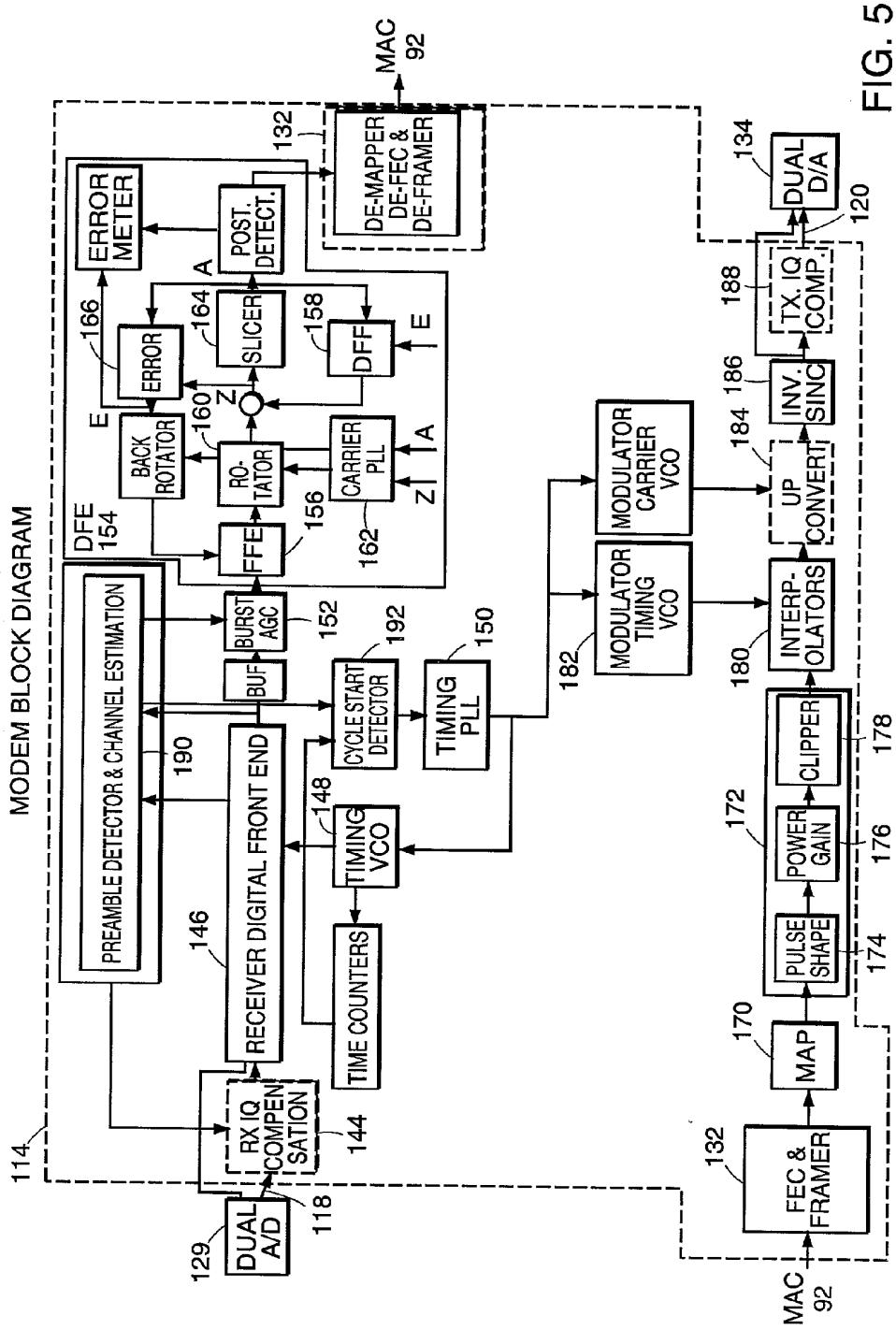
MODEM BLOCK DIAGRAM
MAC 92
DE-MAPPER DE-FEC & DE-FRAMER
132
ERROR METER
POST. DETECT.
A
166
ERROR
164
SLICER
158
DFF
E
E
BACK ROTATOR
160
Z
RO-TATOR
CARRIER PLL
A
Z
DFE 154
FFE
156
162
BURST AGC
152
BUF
PREAMBLE DETECTOR & CHANNEL ESTIMATION
190
RECEIVER DIGITAL FRONT END
146
CYCLE START DETECTOR
192
TIMING PLL
150
TIMING VCO
148
TIME COUNTERS
RX IQ COMPEN SATION
144
118
114
DUAL A/D
129
MODULATOR CARRIER VCO
MODULATOR TIMING VCO
182
INTERP-OLATORS
180
UP CONVERT
184
INV. SINC
186
TX. IQ COMP.
188
DUAL D/A
134
120
CLIPPER
178
POWER GAIN
176
PULSE SHAPE
174
172
MAP
170
FEC & FRAMER
132
MAC 92

FIG. 5

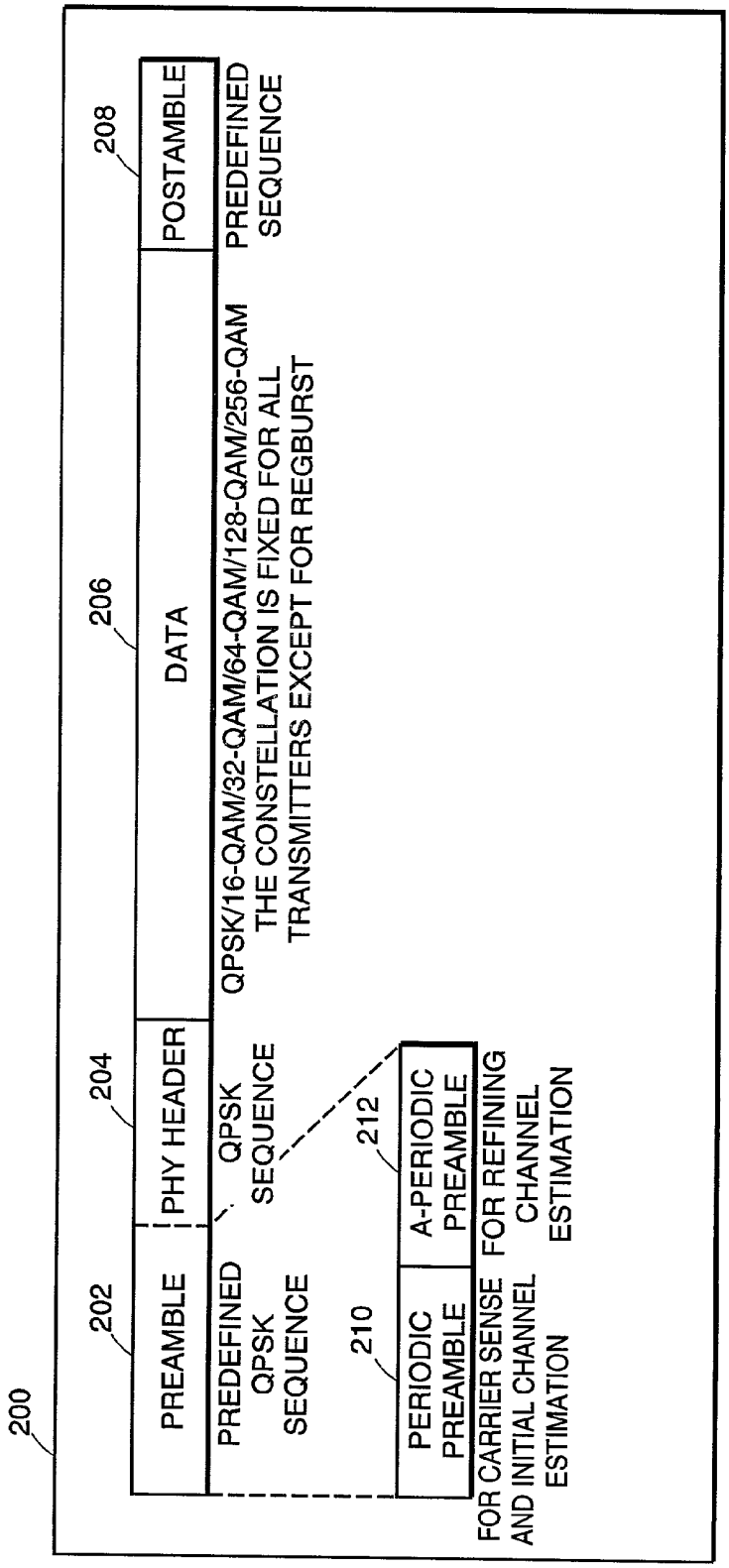
200
202
PREAMBLE
204
PHY HEADER
206
DATA
208
POSTAMBLE
PREDEFINED QPSK SEQUENCE
QPSK SEQUENCE
QPSK/16-QAM/32-QAM/64-QAM/128-QAM/256-QAM THE CONSTELLATION IS FIXED FOR ALL TRANSMITTERS EXCEPT FOR REGBURST
PREDEFINED SEQUENCE
210
PERIODIC PREAMBLE
FOR CARRIER SENSE AND INITIAL CHANNEL ESTIMATION
212
A-PERIODIC PREAMBLE
FOR REFINING CHANNEL ESTIMATION

FIG. 6

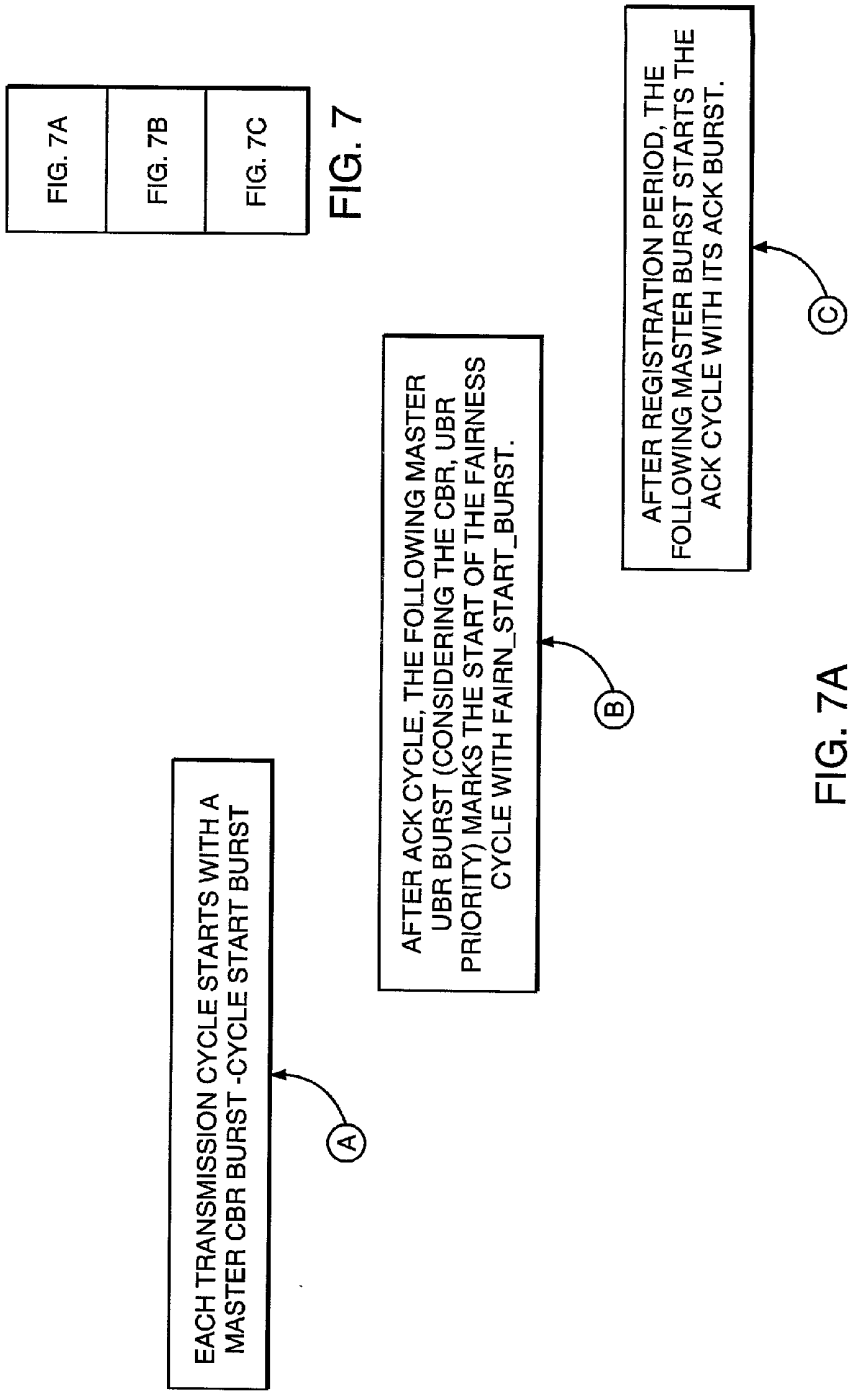
FIG. 7A
FIG. 7B
FIG. 7C
EACH TRANSMISSION CYCLE STARTS WITH A MASTER CBR BURST -CYCLE START BURST
A
AFTER ACK CYCLE, THE FOLLOWING MASTER UBR BURST (CONSIDERING THE CBR, UBR PRIORITY) MARKS THE START OF THE FAIRNESS CYCLE WITH FAIRN_START_BURST.
B
AFTER REGISTRATION PERIOD, THE FOLLOWING MASTER BURST STARTS THE ACK CYCLE WITH ITS ACK BURST.
C

FIG. 7

FIG. 7A

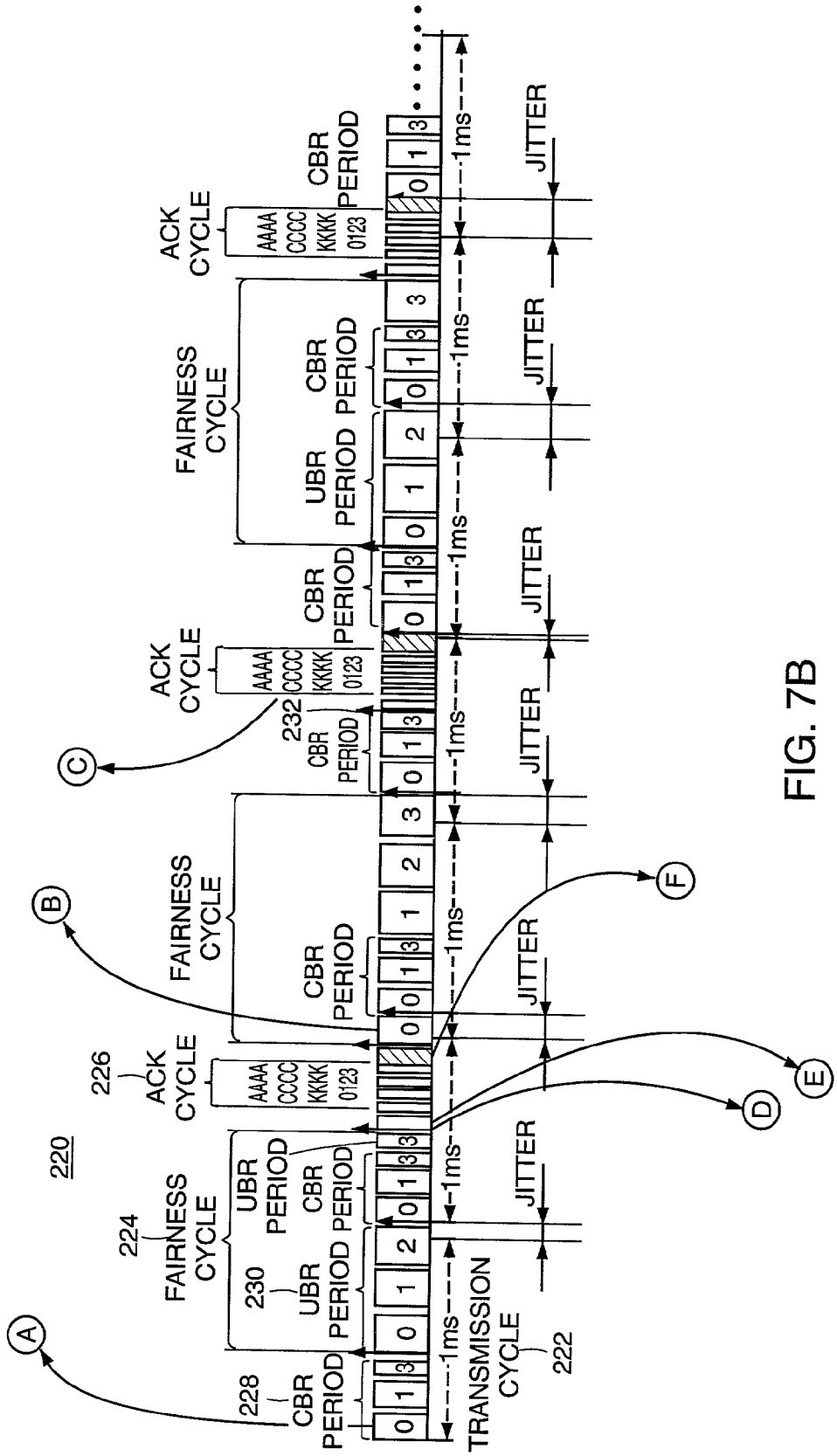
220
224
FAIRNESS CYCLE
226
ACK CYCLE
AAAA
CCCC
KKKK
0123
228
CBR PERIOD
230
UBR PERIOD
232
TRANSMISSION CYCLE
222
1ms
JITTER
A
B
C
D
E
F

FIG. 7B

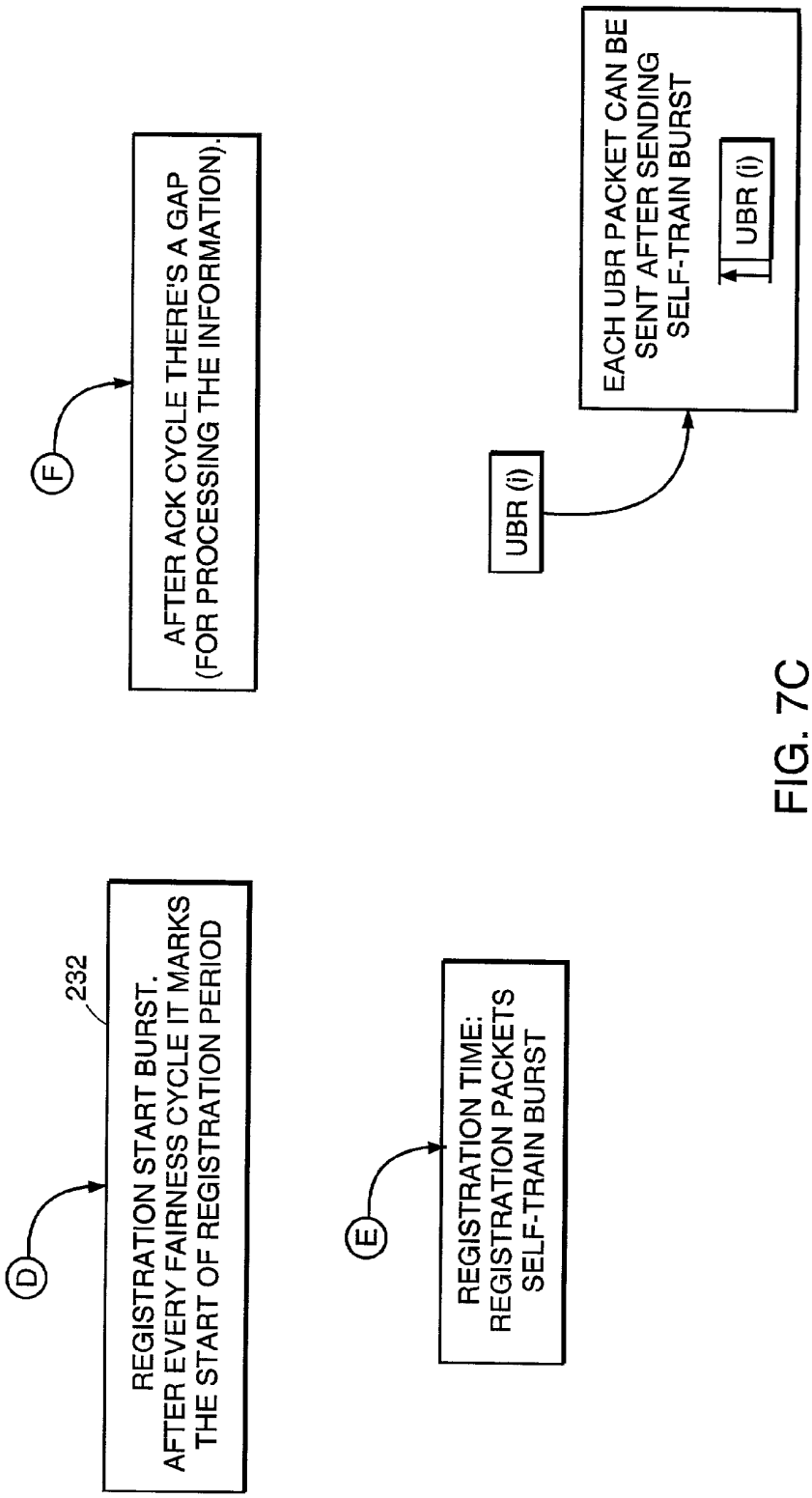
F
AFTER ACK CYCLE THERE'S A GAP (FOR PROCESSING THE INFORMATION).
UBR (i)
EACH UBR PACKET CAN BE SENT AFTER SENDING SELF-TRAIN BURST
UBR (i)
232
D
REGISTRATION START BURST. AFTER EVERY FAIRNESS CYCLE IT MARKS THE START OF REGISTRATION PERIOD
E
REGISTRATION TIME: REGISTRATION PACKETS SELF-TRAIN BURST

FIG. 7C

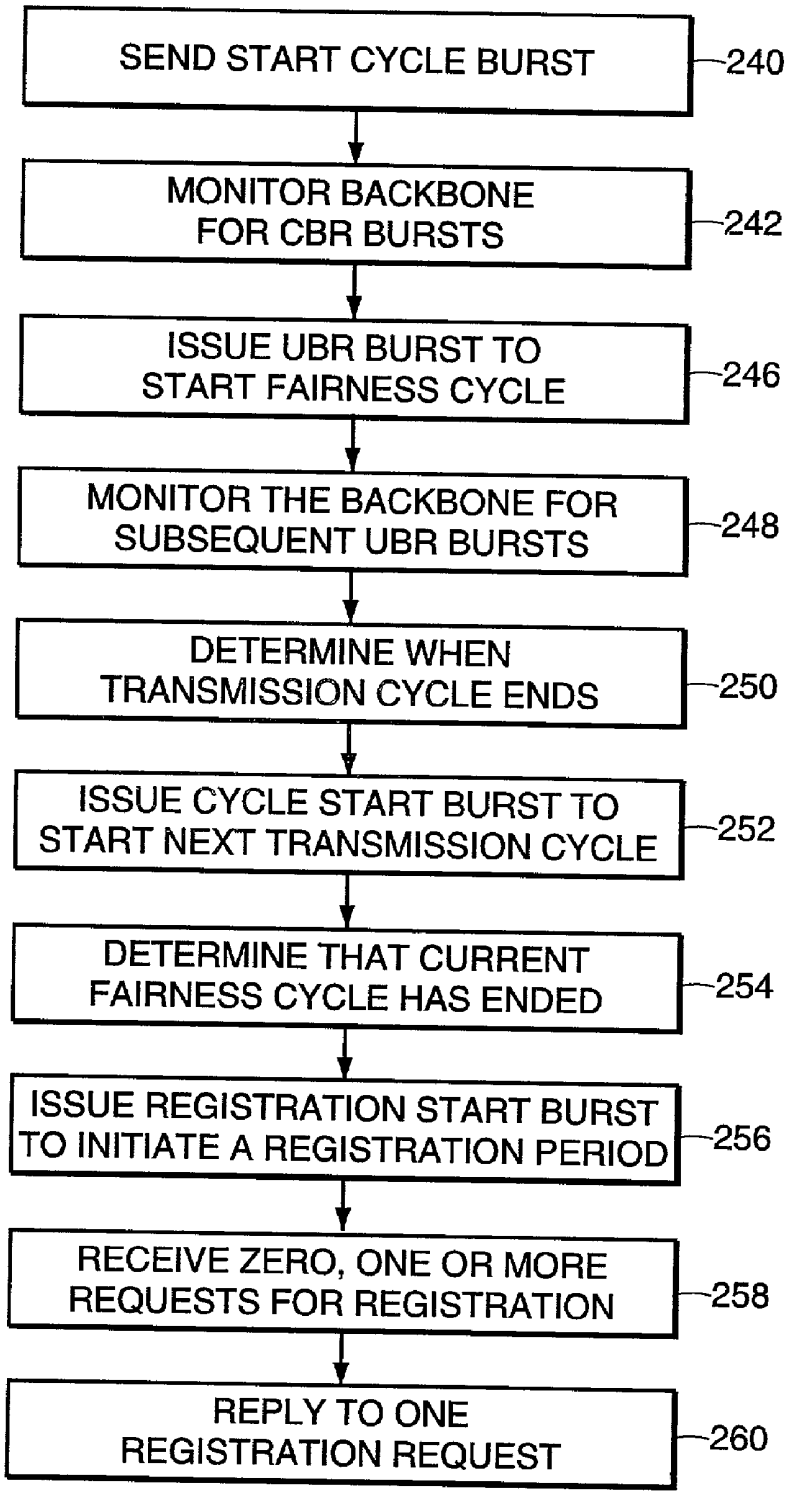
SEND START CYCLE BURST
240
MONITOR BACKBONE FOR CBR BURSTS
242
ISSUE UBR BURST TO START FAIRNESS CYCLE
246
MONITOR THE BACKBONE FOR SUBSEQUENT UBR BURSTS
248
DETERMINE WHEN TRANSMISSION CYCLE ENDS
250
ISSUE CYCLE START BURST TO START NEXT TRANSMISSION CYCLE
252
DETERMINE THAT CURRENT FAIRNESS CYCLE HAS ENDED
254
ISSUE REGISTRATION START BURST TO INITIATE A REGISTRATION PERIOD
256
RECEIVE ZERO, ONE OR MORE REQUESTS FOR REGISTRATION
258
REPLY TO ONE REGISTRATION REQUEST
260

FIG. 8A

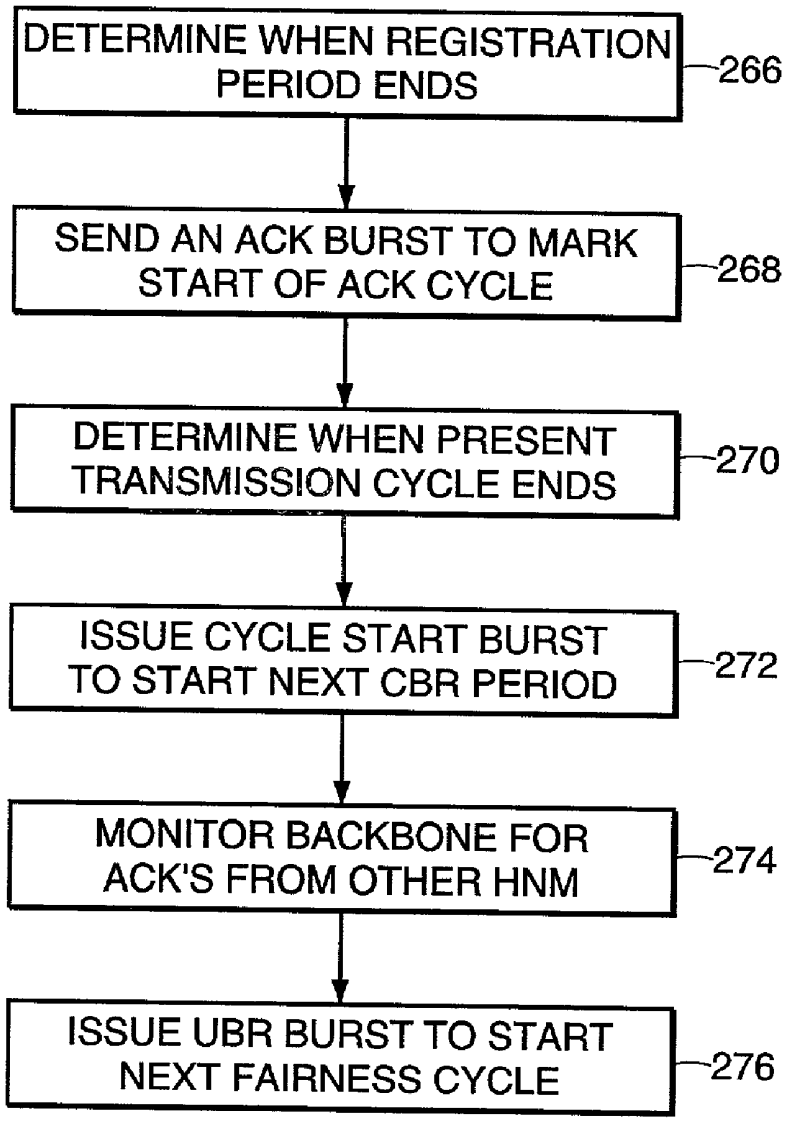
DETERMINE WHEN REGISTRATION PERIOD ENDS
266
SEND AN ACK BURST TO MARK START OF ACK CYCLE
268
DETERMINE WHEN PRESENT TRANSMISSION CYCLE ENDS
270
ISSUE CYCLE START BURST TO START NEXT CBR PERIOD
272
MONITOR BACKBONE FOR ACK'S FROM OTHER HNM
274
ISSUE UBR BURST TO START NEXT FAIRNESS CYCLE
276

FIG. 8B

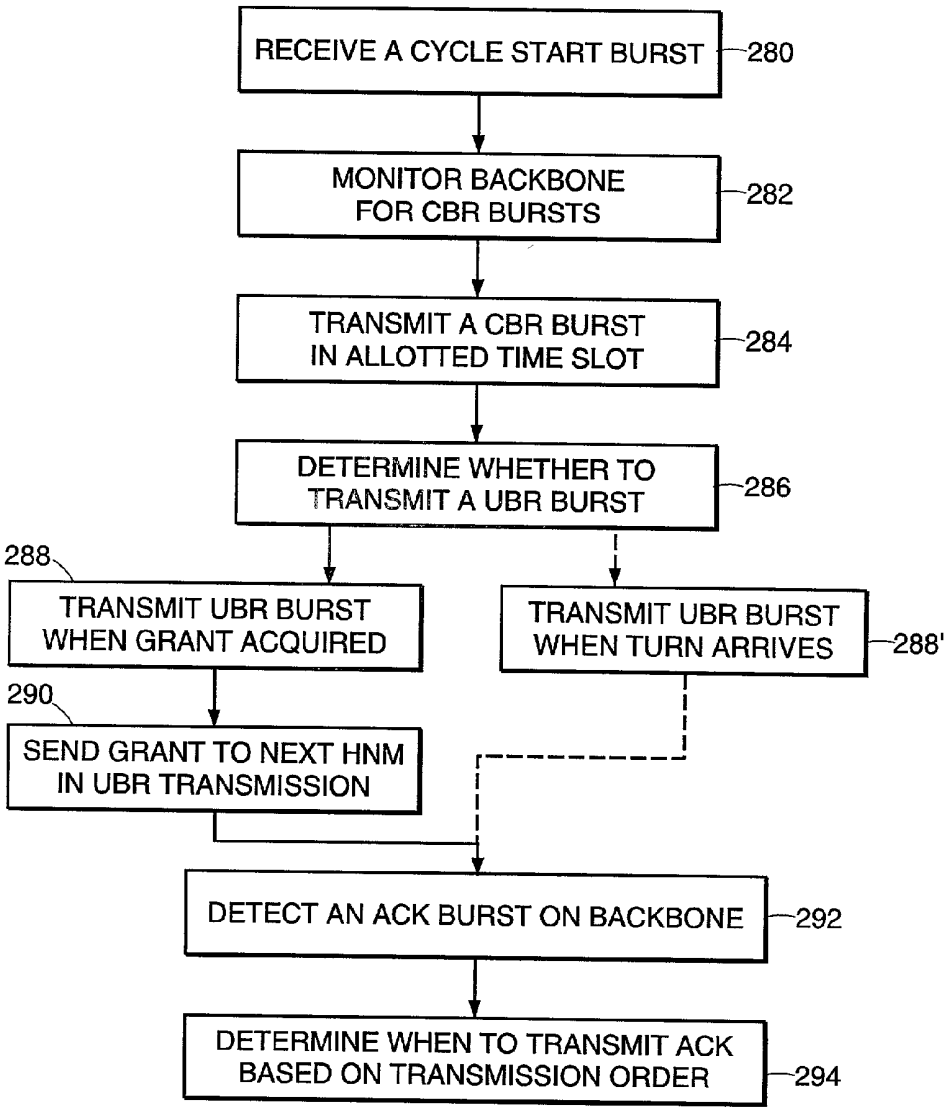
RECEIVE A CYCLE START BURST
280
MONITOR BACKBONE FOR CBR BURSTS
282
TRANSMIT A CBR BURST IN ALLOTTED TIME SLOT
284
DETERMINE WHETHER TO TRANSMIT A UBR BURST
286
288
TRANSMIT UBR BURST WHEN GRANT ACQUIRED
TRANSMIT UBR BURST WHEN TURN ARRIVES
288'
290
SEND GRANT TO NEXT HNM IN UBR TRANSMISSION
DETECT AN ACK BURST ON BACKBONE
292
DETERMINE WHEN TO TRANSMIT ACK BASED ON TRANSMISSION ORDER
294

FIG. 9

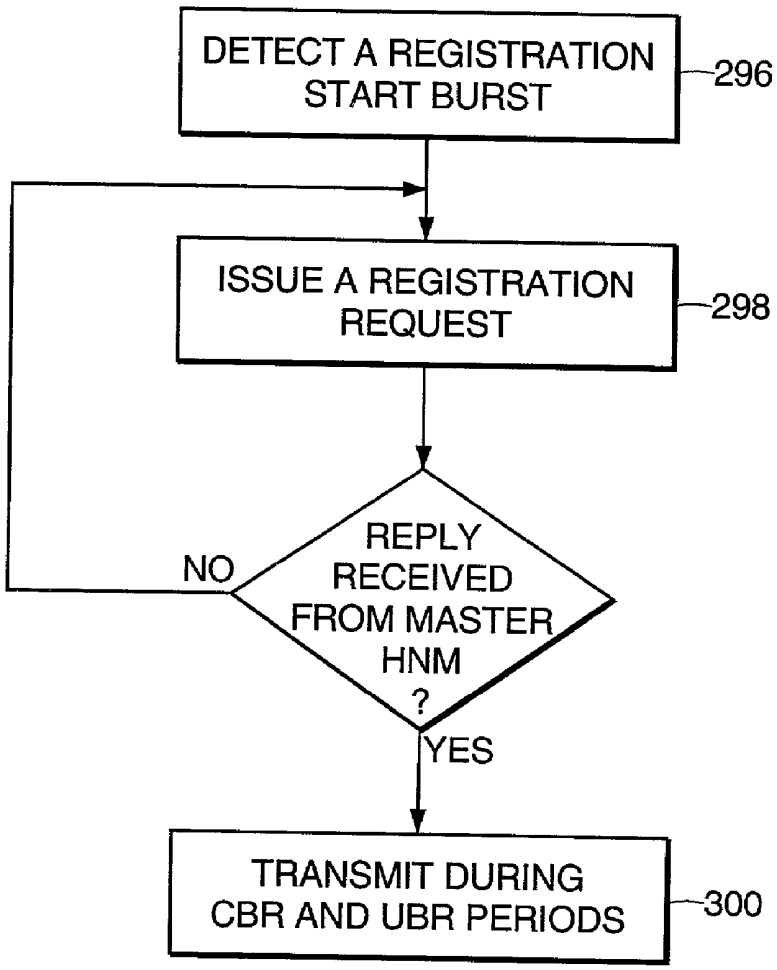
DETECT A REGISTRATION START BURST
296
ISSUE A REGISTRATION REQUEST
298
REPLY RECEIVED FROM MASTER HNM ?
NO
YES
TRANSMIT DURING CBR AND UBR PERIODS
300

FIG. 10

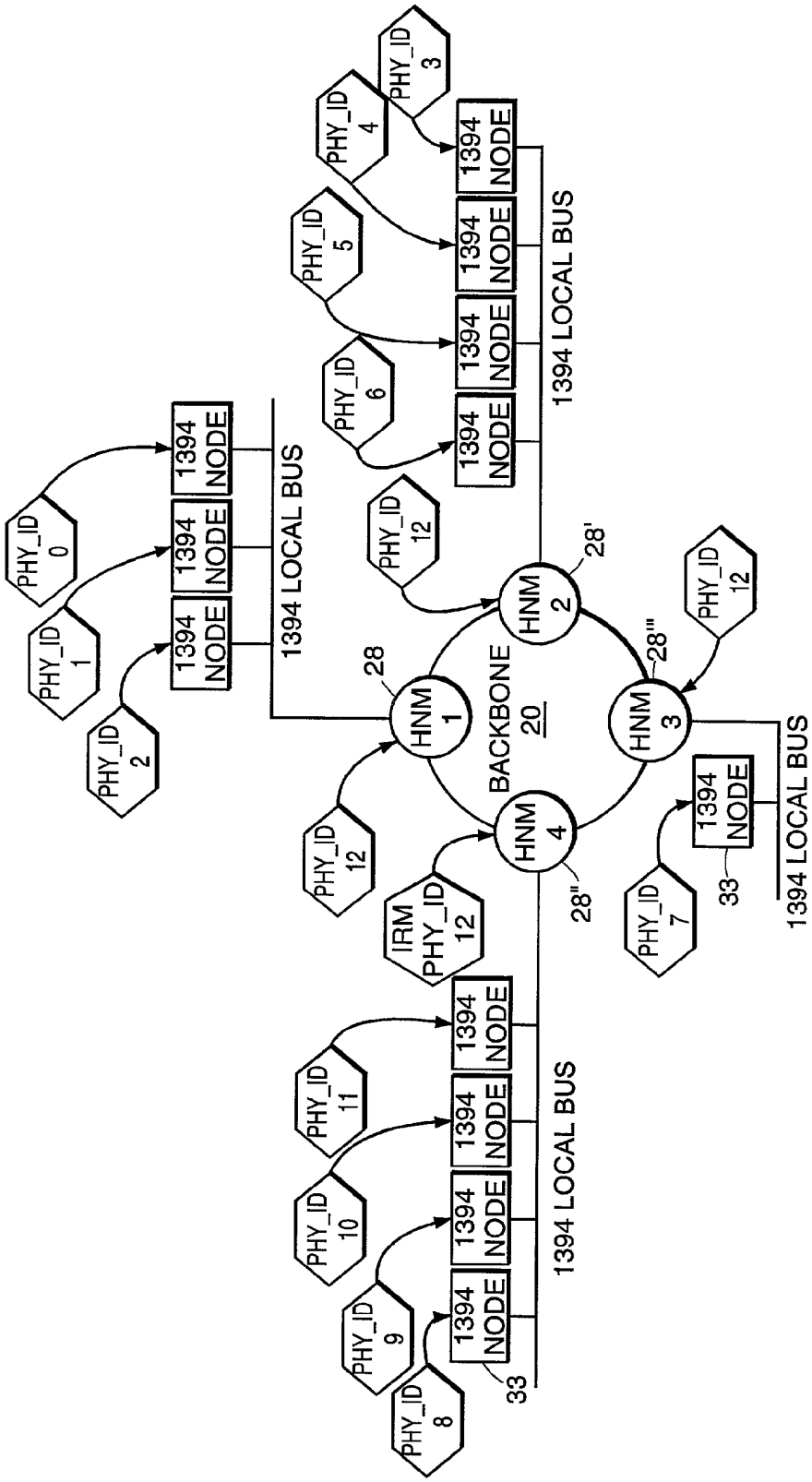
PHY_ID 0
PHY_ID 1
PHY_ID 2
1394 NODE
1394 NODE
1394 NODE
1394 LOCAL BUS
28
HNM 1
PHY_ID 12
BACKBONE 20
HNM 2
28'
PHY_ID 12
PHY_ID 3
PHY_ID 4
PHY_ID 5
PHY_ID 6
1394 NODE
1394 NODE
1394 NODE
1394 NODE
1394 LOCAL BUS
PHY_ID 12
HNM 3
28'''
1394 NODE
33
1394 LOCAL BUS
PHY_ID 7
HNM 4
28''
IRM PHY_ID 12
PHY_ID 11
PHY_ID 10
PHY_ID 9
PHY_ID 8
1394 NODE
1394 NODE
1394 NODE
1394 NODE
1394 LOCAL BUS
33

FIG. 11

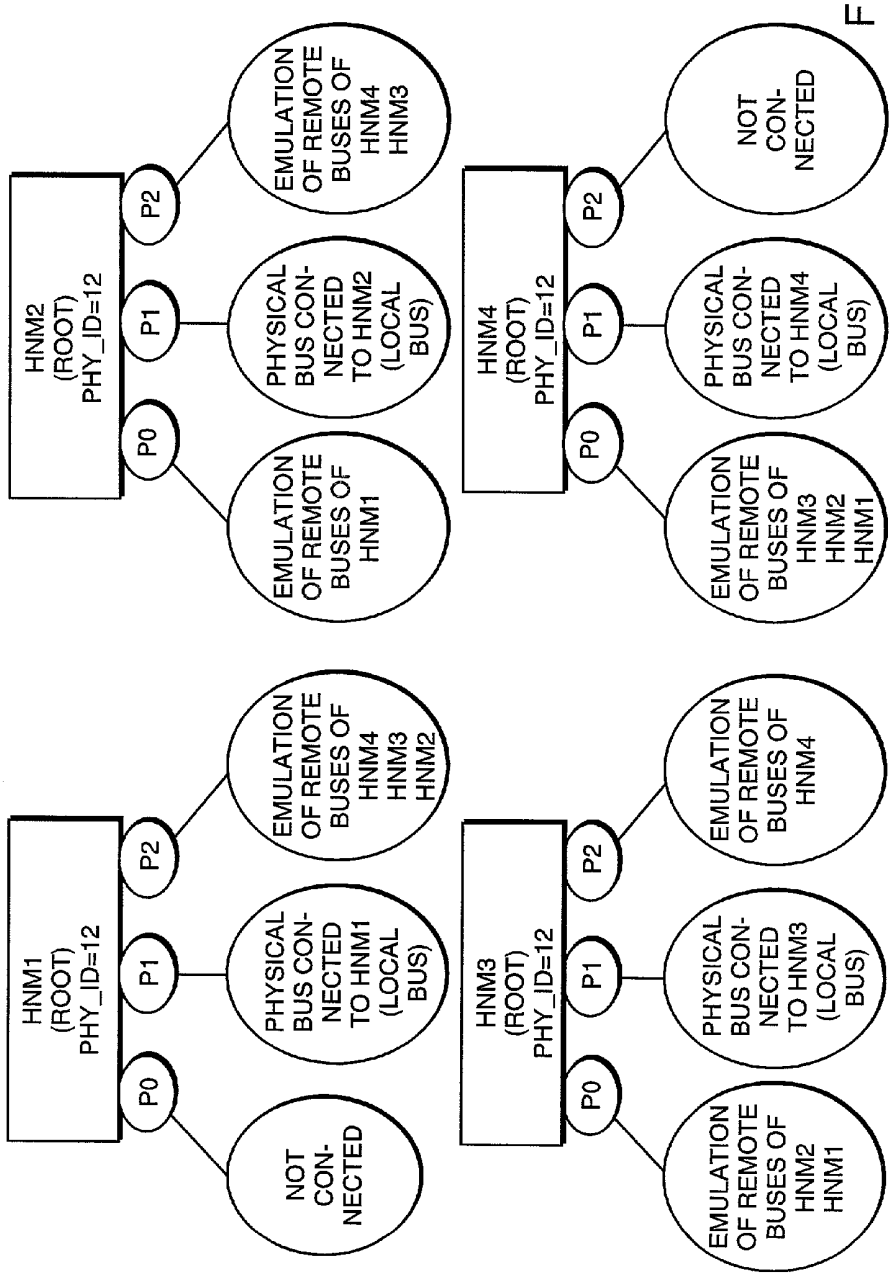
HNM1
(ROOT)
PHY_ID=12
P0
P1
P2
NOT CON-NECTED
PHYSICAL BUS CON-NECTED TO HNM1 (LOCAL BUS)
EMULATION OF REMOTE BUSES OF HNM4 HNM3 HNM2
HNM2
(ROOT)
PHY_ID=12
P0
P1
P2
EMULATION OF REMOTE BUSES OF HNM1
PHYSICAL BUS CON-NECTED TO HNM2 (LOCAL BUS)
EMULATION OF REMOTE BUSES OF HNM4 HNM3
HNM3
(ROOT)
PHY_ID=12
P0
P1
P2
EMULATION OF REMOTE BUSES OF HNM2 HNM1
PHYSICAL BUS CON-NECTED TO HNM3 (LOCAL BUS)
EMULATION OF REMOTE BUSES OF HNM4
HNM4
(ROOT)
PHY_ID=12
P0
P1
P2
EMULATION OF REMOTE BUSES OF HNM3 HNM2 HNM1
PHYSICAL BUS CON-NECTED TO HNM4 (LOCAL BUS)
NOT CON-NECTED

FIG. 12

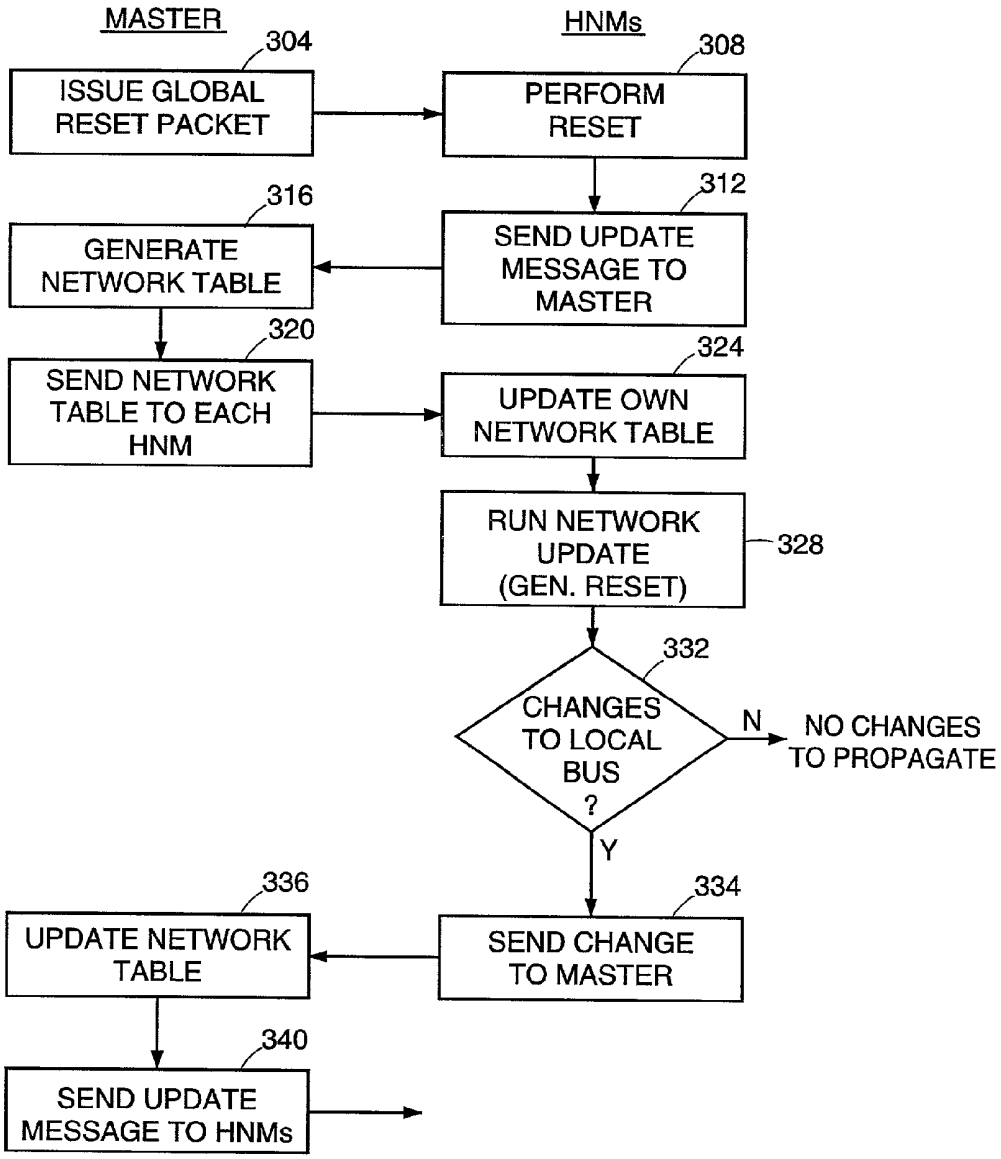
MASTER
HNMs
304
ISSUE GLOBAL RESET PACKET
308
PERFORM RESET
312
SEND UPDATE MESSAGE TO MASTER
316
GENERATE NETWORK TABLE
320
SEND NETWORK TABLE TO EACH HNM
324
UPDATE OWN NETWORK TABLE
RUN NETWORK UPDATE (GEN. RESET)
328
332
CHANGES TO LOCAL BUS ?
N
NO CHANGES TO PROPAGATE
Y
334
SEND CHANGE TO MASTER
336
UPDATE NETWORK TABLE
340
SEND UPDATE MESSAGE TO HNMs

FIG. 13

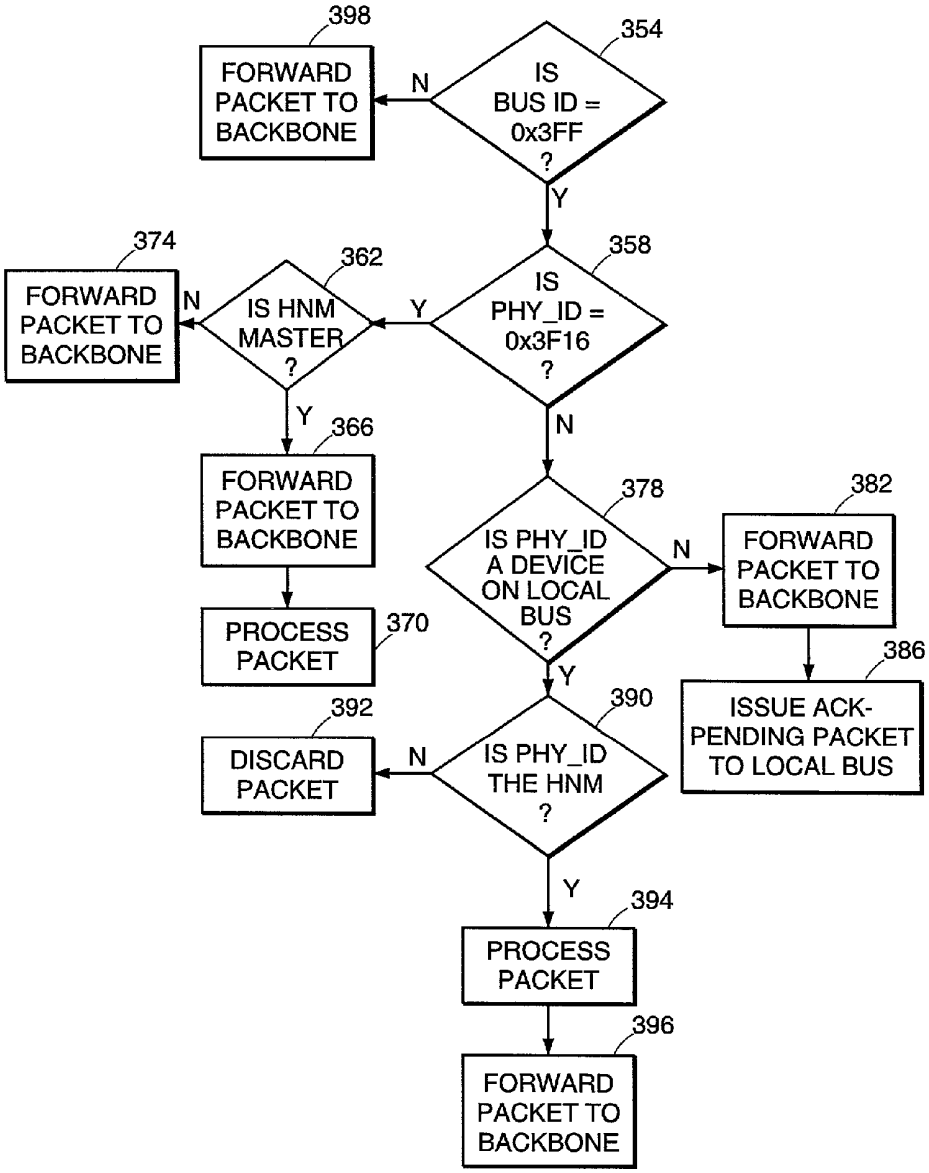
398
FORWARD PACKET TO BACKBONE
N
354
IS BUS ID = 0x3FF ?
Y
374
FORWARD PACKET TO BACKBONE
N
362
IS HNM MASTER ?
Y
358
IS PHY_ID = 0x3F16 ?
Y
366
FORWARD PACKET TO BACKBONE
N
378
IS PHY_ID A DEVICE ON LOCAL BUS ?
N
382
FORWARD PACKET TO BACKBONE
PROCESS PACKET
370
Y
386
ISSUE ACK-PENDING PACKET TO LOCAL BUS
392
DISCARD PACKET
N
390
IS PHY_ID THE HNM ?
Y
394
PROCESS PACKET
396
FORWARD PACKET TO BACKBONE

FIG. 14

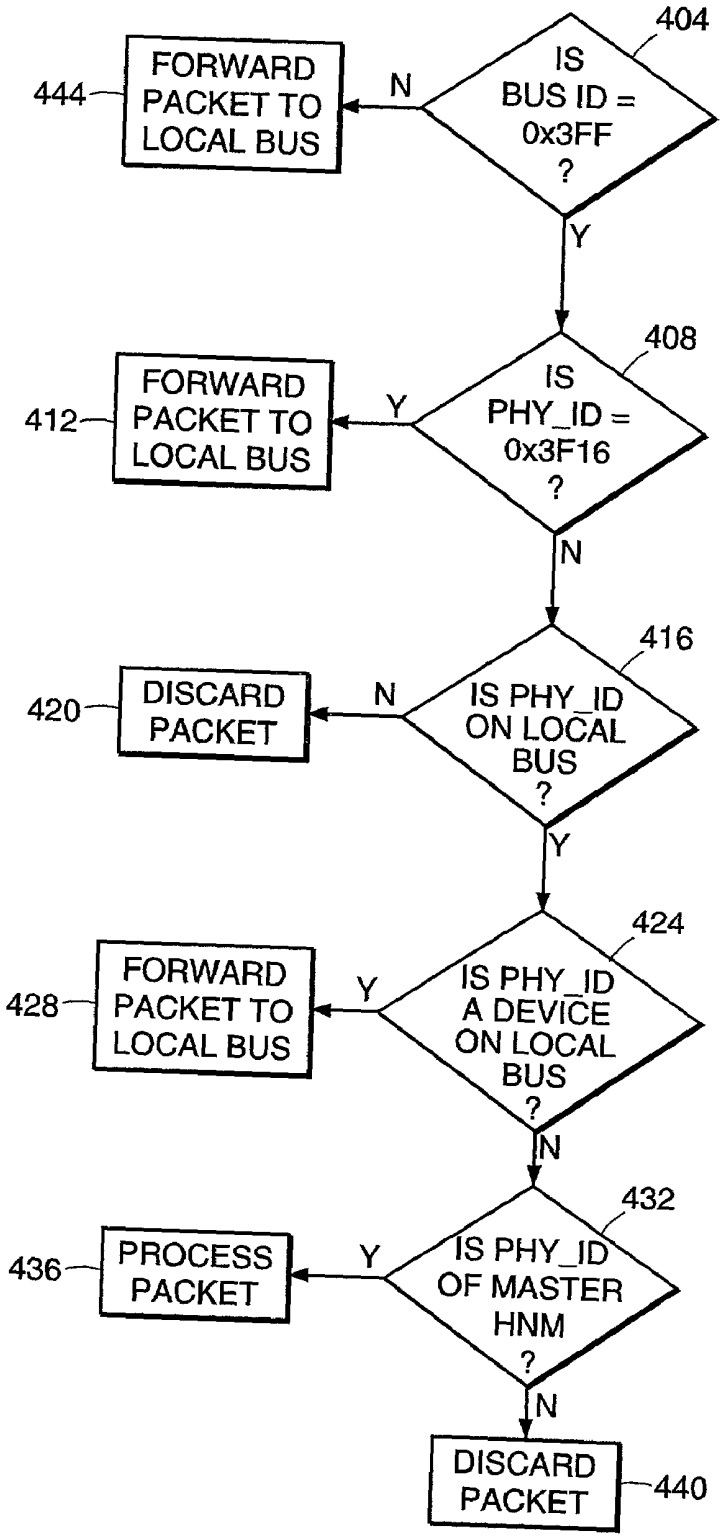
404
IS BUS ID = 0x3FF ?
N
444
FORWARD PACKET TO LOCAL BUS
Y
408
IS PHY_ID = 0x3F16 ?
Y
412
FORWARD PACKET TO LOCAL BUS
N
416
IS PHY_ID ON LOCAL BUS ?
N
420
DISCARD PACKET
Y
424
IS PHY_ID A DEVICE ON LOCAL BUS ?
Y
428
FORWARD PACKET TO LOCAL BUS
N
432
IS PHY_ID OF MASTER HNM ?
Y
436
PROCESS PACKET
N
DISCARD PACKET
440

FIG. 15

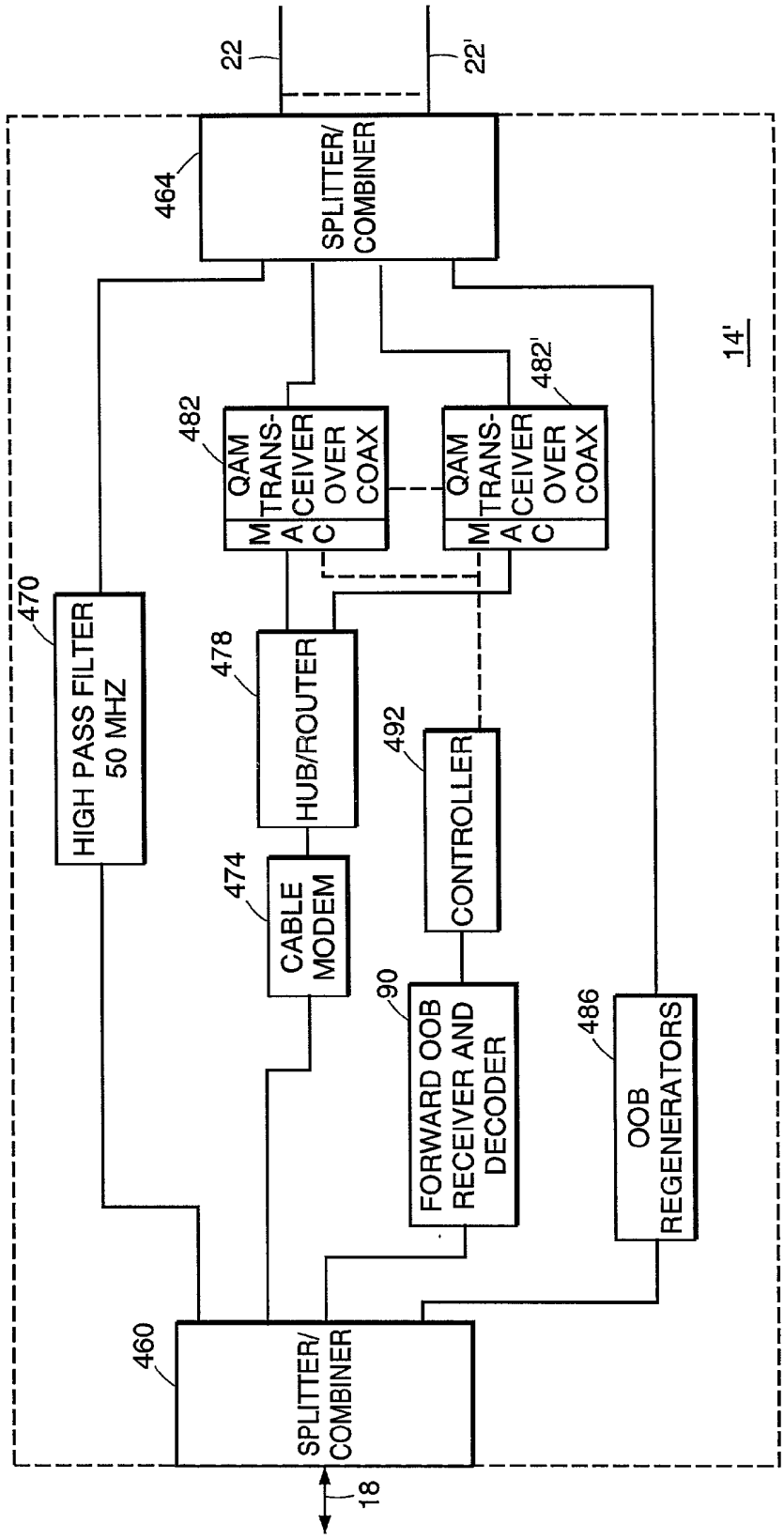
22
22'
464
SPLITTER/ COMBINER
14'
482
QAM TRANS-CEIVER OVER COAX
MAC
482'
QAM TRANS-CEIVER OVER COAX
MAC
470
HIGH PASS FILTER 50 MHZ
478
HUB/ROUTER
492
CONTROLLER
474
CABLE MODEM
90
FORWARD OOB RECEIVER AND DECODER
486
OOB REGENERATORS
460
SPLITTER/ COMBINER
18

FIG. 16

HOME NETWORK SYSTEM AND METHOD

RELATED APPLICATIONS

[0001] This application claims the benefit of the filing date of co-pending U.S. Provisional Application, Serial No. 60/229,263, filed Aug. 30, 2000, entitled "Home Network Method And Apparatus," and Provisional Application, Serial No. 60/230,110, filed Sep. 5, 2000, entitled "Home Network Method And Apparatus," the entirety of which provisional applications is incorporated by reference herein.

FIELD OF THE INVENTION

[0002] The invention relates to communication networks in general and more specifically to networks suitable for use in residential buildings.

BACKGROUND OF THE INVENTION

[0003] As the number of electronic devices in the home has increased there has been a demand for a way to permit those devices to communicate between themselves and with external networks. Several standards are evolving protocols that will permit devices to communicate over twisted pair and other wiring modalities.

[0004] However, a large number of homes are presently equipped with coaxial cable to permit the viewing of cable television programming or to permit connection of computer devices to the internet. The evolving standards do not appear to take into account this installed base of coaxial cable. Instead, such standards require the rewiring of homes, in order to comply with the evolving protocol, or the use of other existing media, such as power lines, telephone lines, or wireless links. In comparison to coaxial cables, however, such existing media supports a significantly lower bit rate.

[0005] This invention meets this demand for interconnectivity without the necessity of changing the physical wiring present in the home.

SUMMARY OF THE INVENTION

[0006] The invention relates to a home network. In one aspect, the invention features a home network including a network backbone, a plurality of modules connected to the network backbone, and a demarcation point unit. Each module is connected between the network backbone and a local bus. The demarcation point unit receives a home network signal from one of the modules over the network backbone and returns the home network signal to the plurality of modules. The network backbone includes a plurality of coaxial cables and, in one embodiment, a splitter.

[0007] A module is in communication with a plurality of local buses. Embodiments of the local bus include a 1394 local bus, a universal serial bus (USB), Ethernet bus, Internet protocol (IP) bus. In one embodiment, at least two of the modules are in communication with 1394 local bus.

[0008] The demarcation point unit is in communication with an external network and receives a cable TV (CaTV) signal from the external network. The CaTV and the home network signals pass together over the network backbone to the modules. In one embodiment, the frequency of the home network signal is approximately in the 960-1046 MHz frequency range. A device in communication with the demarcation point unit can receive the CaTV signal directly without passing through a module.

[0009] The demarcation point unit includes a signal reflector unit. In one embodiment, the signal reflector unit that receives the home network signal from one module—the home network signal is at a first frequency. The signal reflector unit returns the home network signal to the plurality of modules of the home network signal having a second frequency. The first frequency can be the same as or different (e.g., higher or lower) than the second frequency.

[0010] In another aspect, the invention features a home network including a demarcation point unit and a plurality of modules. The demarcation point unit receives a signal from a network that is external to the home. Each of plurality of modules is connected to the demarcation point unit by one or more coax cables and to a device by a local bus. One of the modules receives a message from the device connected to that one module by the corresponding local bus and transmits the message to the demarcation point unit. The demarcation point unit receives the message from that one module and transmits the message and the signal together to each of the plurality of modules over the coax cables.

[0011] In yet another aspect, the invention features a demarcation point unit that connects a home network and an external network. The demarcation point unit includes a diplexer that receives a first signal from the home network and a second signal from the external network. The diplexer separates the first signal from the second signal. A signal reflector unit receives the separated first signal from the diplexer and returns the first signal to the diplexer for transmission to the home network.

[0012] In one embodiment, the signal reflector unit includes a coax cable that reflects the first signal received from the diplexer back to the diplexer. The coax cable of the signal reflector unit can be shorted to ground or unterminated. In another embodiment, the signal reflector unit includes a delay line in communication with the diplexer. The other end of the delay is shorted to ground or unterminated.

[0013] The signal converter unit in another embodiment includes a RF converter that changes a frequency of the first signal before the first signal returns to the diplexer. The signal passing to the diplexer from the home network is an upstream signal. The signal returning to the diplexer from the signal reflector unit is a downstream signal. The signal reflector unit includes a second diplexer having an input/output (I/O) in communication with a first diplexer and an input in communication with the RF converter. The second diplexer separates the upstream signal received by the I/O from the downstream signal received by the input. The second diplexer returns the downstream signal to the first diplexer over the I/O.

[0014] An output in communication with the RF converter passes the upstream signal to the RF converter over the output. The RF converter includes a RF down-converter in communication with a RF up-converter. The RF down-converter changes the frequency of the upstream signal to an intermediate frequency. The RF up-converter changes the intermediate frequency to the frequency of the downstream signal. In one embodiment, the frequency of the upstream signal is higher than the frequency of the first signal. Also,

the power level of the upstream signal received at the signal reflector unit is constant, and the power level of the downstream signal leaving the signal reflector unit is also constant.

[0015] In the signal reflector, a splitter can be connected between the diplexer and the home network. The splitter receives the downstream signal from the diplexer and transmits the returned downstream signal to the home network over a plurality of coax cables. The splitter receives the upstream signal from the home network for transmission to the diplexer. The diplexer combines the first signal received from the signal reflector unit with the signal received from the external network and transmits the combined signal to the home network.

[0016] In another aspect, the invention features a network module that connects a network backbone to a local bus. The network module includes a diplexer that receives an analog signal and separates a home network signal from the analog signal. A modem converts the home network signal to a digital signal. A media access controller (MAC) interfaces with a protocol of the local bus to deliver the digital signal to the local bus.

[0017] In another aspect, the invention features a method for use by modules in a home network for communicating with each other over a coax backbone. A cycle start burst is transmitted over the backbone to start a transmission cycle during which the network modules transmit bursts over the backbone. A first portion of the transmission cycle is allocated for the transmission of isochronous bursts by the network modules. A second portion of the transmission cycle is allocated for the transmission of asynchronous bursts by the network modules.

[0018] A transmission order is established for the network modules to follow when transmitting isochronous and asynchronous bursts over the backbone. The cycle start burst includes the transmission order. Isochronous bursts start at the start of every transmission cycle, followed by the transmission of asynchronous bursts. Transmission of an asynchronous burst is allowed to complete after the end of the transmission cycle.

[0019] In one embodiment, those network modules that are requesting bandwidth for transmitting isochronous bursts are determined. One of the modules is designated to be a master network module, which transmits the cycle start burst. The network modules synchronize to the cycle start burst.

[0020] In another embodiment, bandwidth is allocated in the first portion of the transmission cycle to each network module requesting a guaranteed quality of service. Asynchronous bursts are monitored, by a given network module, on the backbone to determine when a given network module can transmit an asynchronous burst. The given network module receives a grant over the backbone to indicate that the given network module can transmit an asynchronous burst.

[0021] In another embodiment, isochronous bursts are monitored by a given network module on the backbone to determine when that network module can transmit an isochronous burst. An empty burst is transmitted by a given network module if the given network module has no data to transmit during the second portion of the transmission cycle.

BRIEF DESCRIPTION OF THE DRAWINGS

[0022] The invention is pointed out with particularity in the claims. The drawings are not necessarily to scale, emphasis instead generally being placed upon illustrating the principles of the invention. Like reference characters in the respective drawing figures indicate corresponding parts. The advantages of the invention described above, as well as further advantages of the invention, may be better understood by reference to the description taken in conjunction with the accompanying drawings, in which:

[0023] **FIG. 1** is a block diagram of an embodiment of a home network system constructed in accordance with the invention;

[0024] **FIG. 2** is a block diagram of an embodiment of a demarcation point unit including a home network reflector unit as shown in **FIG. 1**;

[0025] **FIG. 2A** is a block diagram of another embodiment of the home network reflector unit;

[0026] **FIG. 3** is a block diagram of an embodiment of a home network module;

[0027] **FIG. 4** is a block diagram of an embodiment of a physical layer of the home network module of **FIG. 3**;

[0028] **FIG. 5** is a block diagram of embodiments of a modem in the home network module of **FIG. 3**;

[0029] **FIG. 6** is a diagram of an embodiment of a burst or message;

[0030] **FIG. 7** is a timing diagram showing an exemplary sequence of communication cycles on a backbone of the home network;

[0031] FIGS. **8A-8B** are flow diagrams illustrating an embodiment of a process by which the master home network module controls communication on the coax backbone;

[0032] **FIG. 9** is a flow diagram illustrating an embodiment of a process by which each home network module in the home network, other than the master home network module, communicates over the backbone of the home network;

[0033] **FIG. 10** is a flow diagram illustrating an embodiment of a process by which a new home network module registers to become part of home network;

[0034] **FIG. 11** is a logical diagram of the home network, in which the backbone connects four IEEE 1394 local buses through different home network modules;

[0035] **FIG. 12** is a conceptual diagram of an emulated bus structure from the perspective of each home network module;

[0036] **FIG. 13** is a flow diagram illustrating a process performed by each of the home network modules to initialize a 1394 bus in the home network;

[0037] **FIG. 14** is a flow diagram illustrating an embodiment of a process by which each home network module handles 1394 asynchronous packets received from the backbone in an emulated bus embodiment;

[0038] **FIG. 15** is a flow diagram illustrating an embodiment of a process by which each home network module

handles 1394 asynchronous packets received from a 1394 local bus in an emulated bus embodiment; and

[0039] **FIG. 16** is a block diagram of another embodiment of the demarcation point unit.

DETAILED DESCRIPTION

[0040] In brief overview, **FIG. 1** shows an embodiment of a home network **10**, constructed in accordance with the invention, including a demarcation point unit (DPU) **14** located at the entry point into a home, which operates as the interface between the home network **10** and an external network **18**, such as a cable television (TV) network or the Internet. The DPU **14** is in communication with a plurality of home-network modules (HNM) **28**, **28'**, **28"**, **28'"** (generally **28**), each located in one of various rooms of the home. Each HNM **28** is the interface between devices in a room (e.g., home entertainment devices and computer devices) and the DPU **14**.

[0041] Implementing the home network **10** in the home does not require the rewiring of the cable TV equipment that is typically already installed in many homes for accessing the cable TV network **18** or the Internet. The HNMs **28** communicate with the DPU **14** and with each other over standard cable equipment. Such cable equipment includes coaxial (or coax) cables **22**, splitters (generally 24), and cable TV outlets **26**. This installed cable equipment operates as a backbone of the home network **10** for conveying intra-room communications. Although the home network **10** can operate with existing coax wiring, the principles of the invention apply also to other types of wiring, such as CAT-5 or plastic fiber. In general, the home network **10** operates in parallel to the cable TV services, leaving legacy cable TV signals and devices (such as set top boxes and cable modems) unaffected.

[0042] With this existing coax cable equipment, the home network **10** joins various computer devices, such as personal computers and peripherals (printer, scanner, CD etc.), and entertainment equipment, such as set top boxes (STB), televisions, video cassette recorders, personal video recorder (PVR), etc., located throughout the home into one network. By this one network, various computer devices in different rooms can share access to the Internet, and video or audio sources played in one room can be enjoyed in another room of the home. In one embodiment, described in more detail below, the existing cable equipment provides an intra-room backbone for an IEEE-1394 (FireWire) network.

[0043] More specifically, in an exemplary embodiment of the home network **10**, HNMs **28**, **28'**, **28"**, **28'"** in respective rooms **30**, **30'**, **30"**, **30'"** (generally 30) are connected to the home network backbone through cable TV outlets **26**. The home network backbone (referred to hereafter as backbone **20**), includes a plurality of coax cables **22** that connect the cable TV outlets **26**, and thus the HNMs **28**, to the DPU **14**. The coax cables **22** connect to the splitters **24**, which distribute the signals received from the external network **18** and from the HNMs **28** to each of the rooms **30** connected to the home network **10**. In the embodiment shown in **FIG. 1**, the DPU **14** includes one of the splitters **24'**; in another embodiment, instead of being part of the DPU **14**, that splitter **24'** is connected to an output of the DPU **14**. In some embodiments, a residential gateway device is located at the demarcation point (i.e., the entry point of the coax cable to the home) to exchange signals between the external network **18** and other devices in the house, such as a cable modem or a STB. Embodiments of the residential gateway provide Internet access (e.g., cable modem, digital subscriber line (DSL)). Other embodiments provide the functionality of a set top box, of a personal video recorder, or of a tuner for multiprogramming. In each of these embodiments, the DPU **14** can be integrated into or be external to such the residential gateway device.

[0044] Each room **30** includes one or more devices **33**. Devices **33** include, for example, digital video disc (DVD) players, video cassette recorders (VCR), game consoles, interactive televisions computers, scanners, fax machines, printers, analog televisions, digital televisions, set top boxes, stereo systems, and camcorders. In each room **30** having a device **33** that the resident of the home wants to make available for intra-room communication, there is located a HNM **28** that connects that device **33** to the backbone **20**. For example, rooms **30**, **30'**, **30"**, and **30'"** each have devices **33** that the resident chooses to have intra-room communication capability; so, in each of these rooms an HNM **28** connects those devices **33** to the backbone **20**.

[0045] Devices **33** within a given room **30** that communicate according to the same protocol (e.g., USB (universal serial bus), IP (Internet Protocol), Ethernet, and IEEE-1394) are typically connected to the same local bus **35**. Each HNM **28** can interface with one or more different types of local buses (generally 35). For example, in room **30** the HNM **28** interfaces with a local 1394-bus **35'**, connected to an analog set-top box and a DVD player, and a local data-bus **35"** (e.g., Ethernet, USB, IP), connected to analog set-top box and a personal computer. In one embodiment, devices **33** in different rooms of the same local bus type (e.g., 1394) can communicate with each other over the backbone **20**, whereas devices **33** of different local bus types (e.g., 1394 and USB) do not. In some embodiments, the HNM **28** resides in the entertainment or data device, in other embodiments, the HNM **28** resides in a separate box.

[0046] In addition to the various types of local buses **35**, the HNM **28** can connect to other devices **33** in the room **30** by coax cable. For example, the HNM **28** in room **30** also connects to the analog set-top box by coax cable **36**. Although shown in **FIG. 1** to be separate from the analog set-top box, in one embodiment the HNM **28** is a built-in component of the set-top box.

[0047] Each HNM **28** communicates with the DPU **14** and each other HNM **28** on the backbone **20** with analog signals and converts analog signals received from the DPU **14** and the HNMs **28** into digital signals for delivery to devices **33** connected to that HNM **28**. If a room **30** has a legacy device **33** requiring an analog signal (such as an analog or digital TV), but does not have a set-top box, an interface box can convert the digital signal produced by the HNM **28** into a signal that is appropriate for that legacy device. For example, in room **30'**, the HNM **28'** communicates with the analog TV, which requires an analog signal, through the interface box **32**, which converts 1394 digital signals to audio/visual analog signals.

[0048] Instead of being on the same local bus **35**, devices **33** of the same protocol within a given room **30** can connect to the same HNM **28** by different local buses **35**. With this arrangement, such devices **33** can communicate with devices **33** in other rooms **30** of the home.

[0049] Devices **33** that the resident does not want to participate in intra-room communication can connect directly to the external network **18** without the use of the HNM **28**. For example, in room **30**^{iv} , the analog television set is connected directly to the backbone **20** without an intervening HNM **28**. Such devices **33** continue to receive the legacy cable TV signals from the cable TV network or have broadband access to the Internet through the DPU **14**.

[0050] In operation, each HNM **28** permits those devices **33** connected to that HNM **28** to communicate with other devices **33** in different rooms **30**, to receive programming from the cable television, and to have broadband access to the Internet (e.g., through a cable modem, DSL service, and Satellite). For example, a DVD disc playing in the DVD player in room **30** can be viewed on the digital television in room **30**" and that digital television can also receive programming from the cable television network **18**. Similarly, computer devices in various rooms can communicate with one another using their respective HNMs **28** connected to the backbone **20**. For example, the personal computer (PC) in room **30** can print a document on the printer or share a file with the personal computer in room **30**'", or access the Internet through a cable modem (or DSL or audio modem). In accordance with the principles of the invention, the analog signal to and from the Internet (or cable provider) runs over the same coax wires **22** in the house and at the same time as the intra-room communication signals (hereafter the home network signal). In each case, the signal received from the cable television network or Internet provider are routed to the proper electronic devices by way of the DPU **14** and the appropriate HNM **28**.

[0051] **FIG. 2** shows an embodiment of the DPU **14** including a diplexer **40**, a home-network reflector unit (HRU) **44** and a splitter **24**". In general, the diplexer **40** separates a cable TV (CaTV) signal (or satellite signal) received from the external network **18** from a home network signal received from the HNMs **28** connected to the backbone **20**. One input/output (I/O) port (the "L" port) of the diplexer **40** transmits and receives the CaTV signal (or satellite signal) to and from the external network **18**. Another I/O port (the "H" port) of the diplexer **40** transmits and receives the home network signal to and from HRU **44**. The diplexer **40** also combines the CaTV (or satellite) signal received from the external network **18** with the home network signal received from the HRU **44** and passes the combined signal to the splitter **24**' through a third I/O port for subsequent transmission to the HNMs **28** over the backbone **20**.

[0052] The "L" port uses a low-pass filter at a certain predetermined frequency, fc, and the "H" port uses a high-pass filter at the same frequency, fc. By setting the frequency, fc, to about 900 MHz, for example, the low-pass "L" port transfers TV signals (5-860 Mhz), and the high-pass "H" port transfers the home network signal above 860 MHz. More specifically, one embodiment sets the cutoff frequency to 950 MHz to separate frequencies above 950 MHz for use by the home network signal from the CaTV signals, which are in the 5-860 MHz range.

[0053] If satellite TV signals are used inside the home, the frequency, fc, is set to about 2100 MHz, to separate the satellite TV signals (950-2100 MHz) from the home network signal (below 950 MHz or above 2100 MHz). In this satellite example, the "L" port is connected to the external network **18** and the "H" port is connected to the HRU **44**. Alternatively, the cutoff frequency, fc, is set to about or below 900 MHz, and the home network signal uses frequencies below the satellite TV signals. In this satellite example, the "H" port is connected to the external network **18** and the "L" port is connected to the HRU **44**.

[0054] In some embodiments, the HRU **44** is either an unterminated or a shorted coaxial cable, which reflects the home network signal received from the diplexer **40** back to the diplexer **40**. Some embodiments of a passive HRU connect one port of a passive delay line to the H port of the diplexer **40** to improve the performance of the network **10** by avoiding signal fading. In such embodiments, the other port of the passive delay line is unterminated or shorted. In still other embodiments, leaving an output of the diplexer **40** unterminated or by shorting that output to ground attains reflection of the home network signal. These embodiments of the HRU **44** are referred to as passive HRUs.

[0055] **FIG. 2A** shows another embodiment of the HRU **44** including a diplexer **42**, band pass (BP) filters **46**, **48**, amplifiers **50**, **52**, an RF down-converter **54**, an RF up-converter **56** and an intermediate frequency filter and amplifier unit **58**. The diplexer **42** along with the BP filters **46**, **48** separate the upstream signal from the downstream signal. The upstream signal is the signal coming from the backbone **20** to the HRU **44**, and downstream signal is the signal returning from the HRU **44** to the backbone **20**. The upstream signal coming from a transmitting HNM **28** enters the diplexer **40** and passes to the internal diplexer **42** of the HRU **44**. The signal from the diplexer **42** is band pass filtered by BP filter **46**, amplified by amplifier **50**, and RF down-converted by down-converter **54** to an intermediate frequency (IF). In one embodiment, the intermediate frequency is 630 MHz. Other different frequencies can be used without departing from the principles of the invention. Usage of the intermediate frequency simplifies the RF design, by keeping the signal, its images, and the local oscillator frequency separate from each other. Having the BPFs **46**, **48** external to the diplexer **42** simplifies the implementation of the diplexer **42**.

[0056] The IF filter and amplifier unit **58** then amplifies and band pass filters the IF signal. The RF up-converter **56** shifts the frequency of the IF signal up to the downstream frequency band. The amplifier **52** and BP filter **48** then amplify and filter the downstream signal. The amplifiers **50**, **52** with the amplification provided by the IF filter and amplifier unit **58**, sufficiently amplify the home network signal to improve the reach of the home network signal inside the home. This downstream signal then passes through the diplexers **42**, **40** back to the backbone **20** of the home network **10**. Thus, the HNMs **28** communicate with each other by issuing messages to the backbone **20** (i.e., the upstream signal). The HRU **44** receives the upstream signal, amplifies and shifts the RF frequency of the upstream signal, and then returns the upstream signal with the shifted frequency to the backbone **20** as the downstream signal. The HNMs **28** then receive the messages in the downstream signal from the backbone **20**. Before the downstream signal reaches the backbone **20**, the diplexer **40** combines the downstream signal with the CaTV signal (or satellite) for transmission over the in home coax wires **22**.

[0057] The home network **10** employs transmission power control. Each HNM **28** adjusts its transmission power to such a power level that when its transmitted signal arrives at the HRU **44**, that signal has a predefined power level. Thus, the input power of the upstream signal arriving at the HRU **44** remains constant because each HNM **28** uses an appropriate transmission power level to account for the attenuation of the signal over the backbone **20** and thereby achieves the predefined power level at the HRU **44**. Also because power level of the inputted upstream signal is constant and the amplification performed by the HRU **44** is constant, the downstream signal leaving the HRU **44** is also constant.

[0058] In one embodiment, the upstream signal at the input to the HRU **44** is −50 dBm, and the downstream signal at its output is −10 dBm. Accordingly, a HNM **28** can transmit at a power between −10 dBm, if located far from the HRU **44**, and −50 dBm if located close to the HRU **44**. The actual transmitted power is determined according to the attenuation between the remote HNM **28** and the HRU **44**. For instance, if the attenuation is 10 dB, the HNM **28** should transmit −40 dBm. If the HNM **28** is located 40 dB from the HRU **44**, that HNM **28** should transmit at a power of −10 dBm so that the upstream signal can reach the HRU **44** with a power of −50 dBm.

[0059] The HRU **44** transmits at a constant power (e.g., −10 dBm). Therefore, if the HNM **28** is located 25 dB from the HRU **44**, that HNM **28** receives the downstream signal at a power of −35 dBm (−10 dBm −25 dBm=−35 dBm), irrespective of which HNM **28** sent the upstream signal to the HRU **44** that reflected back as the downstream signal.

[0060] Employing this transmission power control simplifies significantly the gain control function at the receiver and at the transmitter of the home network signal, particularly if each HNM **28** can set the gain just once during initialization.

[0061] In one embodiment, the home network signal transmitted over the home network backbone **20** is in the 960 to 1046 MHz frequency range, but other frequency bands above the CaTV signals can be used. The CaTV signal (including the signal from Internet providers) is in the frequency range of 5 to 860 MHz. Table 1 shows that frequencies above 960 MHz are available for use in those homes in which CaTV signals are installed. It should be noted that at frequencies greater than 1000 MHz, low quality splitters found in the home provide poor signal isolation and return loss performance.

TABLE 1

Frequency Range (MHz)	Signal
870–896	Cellular mobile phone uplink
896–902	Private land mobile radio
902–928	Amateur radio service reserve
928–932	Domestic public radio service (paging)
944–947	Broadcast radio service (intercity relay)
950–2100	DBS (Satellite over coax)

[0062] In another embodiment, the home network signal is in the 5-45 MHz frequency range. This frequency band is used by the U.S. cable television operators for reverse path signals, i.e., signals that the home devices **33**, such as set top boxes (STB) and cable modems (CM), transmit back to the cable provider (i.e., the head-end). For the European standard (called DVB), the reverse path frequency is located in the band from 5-65 MHz.

[0063] Reverse channel signals transmitted to the head-end include the Reverse Data Channel Out Of Band (RDC OOB) signals from the STB and the Reverse Data Channel of the CM (RDC CM). To ensure proper operation of the set-top boxes and cable modems over the home network **10**, the reverse channel signals should return seamlessly to the head-end. The head-end determines the actual frequencies used for the reverse channel signals and the bandwidth for each channel is small compared to the 5-45 MHz frequency range. Typically, but not necessarily, the set-top boxes and cable modems in the home use the same programmable frequencies for the return channel. The head-end determines the frequency allocation and transmits information regarding the allocated frequencies to the devices **33** in the home.

[0064] To transmit this information, the head-end uses frequencies above 50 MHz. This communications channel, at frequencies above 50 MHz, is termed the Out of Band Forward Data Channel (OOB FDC). Because frequencies above 50 MHz pass freely through the home network **10**, this OOB FDC signal carrying RDC OOB and RDC CM information passes unimpeded to the set top boxes and the cable modems connected directly (that is not through a HNM **28**) to the coaxial cable **22**.

[0065] **FIG. 3** shows an exemplary conceptual embodiment of an implementation of the HNM **28**, which functions as bridge between the coax backbone **20** and each local bus **35**. In brief overview, the HNM **28** receives a signal from a device **33** through a data port and converts that signal into a modulated analog signal over the backbone **20**, combined with the Cable TV signal. In the other direction, the HNM **28** receives an analog signal over the backbone **20** and converts the analog signal into a data signal. In one embodiment, the HNM **28** is implemented as an IC (integrated circuit) chip set that is incorporated in an entertainment or data device, or in a standalone box.

[0066] The backbone-side of the HNM **28** includes a physical layer **90**, a media access control (MAC) layer **92**, and a network layer **94**. The MAC layer **92** supports constant bit rate (CBR) transmission and an unspecified bit rate (UBR) transmission with CBR **96** and UBR **98** protocols, respectively. To support quality of service (QoS) requirements, the CBR protocol **96** is used for the transmission of isochronous data and the UBR protocol **98** for the transmission of asynchronous data. The network layer **94** includes a switching fabric **100** for controlling the flow of isochronous and asynchronous traffic between the backbone **20** and each local bus **35**.

[0067] The architecture of the protocol stack on the local-bus-side of the HNM **28** depends on the type of local bus. For example, if the local bus is an IEEE 1394 bus, then the HNM **28** includes a 1394 Phy layer **102**, a 1394.1 link layer **104** (with bridge functionality), and a network layer **106** that supports isochronous **107** and asynchronous **108** transmissions. In one embodiment, the local bus is an Ethernet bus, which has Ethernet-specific Phy and MAC layers. In another embodiment, the local bus is a universal serial bus (USB), which correspondingly has USB-specific Phy and data link layers. In an embodiment in which the HNM **28** is integrated

in a device, such as a set top box and a personal computer, the bus is specific and internal to that device, and the bus-side of the protocol stack includes a device-specific interface for communicating on the bus.

[0068] In other embodiments, the HNM **28** operates as a bridge between the backbone **20** and a plurality of local buses of different types. For example, as shown in **FIG. 3**, the HNM **28** is a bridge for 1394, 802.3, and a USB local buses. The HNM **28** can support other types of local buses and different combinations of local bus types without departing from the principles of the invention. If the HNM **28** resides in a device, such as in a STB, the various local buses are connected directly to a local bus internal to that device.

[0069] **FIG. 4** shows an exemplary embodiment of the physical layer **90** of the HNM **28**, including the diplexer **110**, RF/Analog unit **112** (hereafter RF unit) and a modem **114**. The diplexer **110** is connected to the coax outlet **26** in the room **30** and separates the CaTV signal (frequencies 5-860 MHz) from the home network signal. The CaTV signal includes the broadcast video, video in demand, cable modem and all other signals that are delivered by the Cable TV operator to the home, and return path signals, like the cable modem return channel, Interactive TV etc. The CaTV signal can pass to other electronic devices in the room **30**, such as a TV cable modem and an analog set-top box (STB). The home network signal passes to the RF unit **112**.

[0070] The RF unit **112** includes a diplexer **116**, which is connected to a downstream path **118** (here, from the backbone **20** to the local bus **35**) and an upstream path **120** (from the local bus **35** to the backbone **20**). From the home network signal, the diplexer **116** and filters **122**, **142** separate the downstream signal from the upstream signal. The downstream signal passes towards the local bus **35** and the upstream signal towards the backbone **20**.

[0071] The bandpass filter (**13**PF) **122** filters the downstream signal (lower frequencies) to remove the upstream signal and out-of-band noise. The downstream signal passes through a low noise amplifier **124** and RF down-conversion circuitry **126**. The RF down-conversion circuitry **126** converts the downstream signal to baseband frequencies. Embodiments of the RF down-conversion circuitry **126** include an I/Q demodulator or a mixer.

[0072] If the RF down-conversion circuitry **126** is operating as an I/Q modulator, the I-channel and Q-channel pass separately to the broadband filter/amplifier unit **128**, which low-pass filters the I-channel and Q-channel separately to remove the image of the signal. The I-channel and Q-channel then pass through a dual analog-to-digital (A/D) converter **129**. The dual A/D **129** has a separate A/D converter for the I-channel and for the Q-channel. The digital output of the A/D converter **129** enters the modem **114**. The modem **114** includes a digital signal processing (DSP) portion **130** and a framer **132**.

[0073] In general, the modem **114** uses an efficient modulation scheme, like QAM, multi QAM, Orthogonal Frequency Division Multiplexing (OFDM) or Discrete Multitone (DMT). In one embodiment, the backbone **20** supports 100 Mbps bit rate. If, for example, the modem **114** uses QAM **256** (8 bits per symbol), only 12.5 MHz (100/8) of bandwidth is required. The use of efficient bandwidth modulations achieves higher data rates for a specific frequency band produces less cross talk between potentially interfering signals. Another advantage is that the modem **114** enables the home network **10** to coexist with pre-existing low-quality splitters often found in the cable networks of the home. Such splitters are frequency limited—at frequencies above 1000 MHz the performance of such splitters degrades significantly. Reflections can occur at the splitter, resulting in inter-symbol interference to the home network signal.

[0074] The upstream path **120** passes from the modem **114** to the diplexer **116** through a dual D/A converter **134**, a baseband filter/amplifier unit **136**, RF up-conversion circuitry **138**, an amplifier **140**, and a band-pass filter **142**. On the upstream path **120**, the DSP **130** generates one or two output words corresponding to one or two D/A converters **134**, depending upon the embodiment of the RF up-conversion circuitry **138**. Embodiments of the RF up-conversion circuitry **138** include an I/Q modulator or a mixer. If I/Q modulation is used in the RF up-conversion circuitry **138**, then two output channels are implemented, with two D/A converters **134**. If the mixer is used, then only one D/A converter **134** is needed.

[0075] The analog baseband signal generated by the D/A converters **134** passes through baseband filters **136** and then is up-converted by the RF up conversion circuitry **138** to the upstream frequency band. The power amplifier **140** amplifies the RF up-converted signal and the bandpass filter **142** filters the signal and the diplexer **116** combines the upstream signal with the CaTV signal for transmission over the home coax backbone **20**. The gain of the amplifiers **124** and **140** are programmable, and the modem DSP **130** sets this gain.

[0076] **FIG. 5** shows two embodiments of the modem **114**, including the DSP **130** and the framer **132**. Signals take two paths through the modem **114**; the downstream path **118** from the dual A/D converter **129** to the MAC **92** through the framer **132** and the upstream path **120** from the framer **132** to the dual D/A converter **134**.

[0077] In **FIG. 5**, two embodiments of the modem **114** are shown. In a first embodiment, I/Q modulation occurs at the RF unit **112**. This embodiment includes an I/Q compensation block **144** (shown in phantom) that compensates digitally for different I/Q modulation imperfections, such as local oscillator leakage, I/Q phase and amplitude imbalance, and DC signal components. The I/Q compensated signal passes to receiver front-end circuitry **146**, which includes a match filter and an interpolator (both not shown). The match filter filters noise and other undesired out-of-band signals. The interpolator outputs a signal that is sampled at an integer multiple of the received sample rate based on timing recovery information received from a timing VCO block **148** and a timing PLL block **150** provide. The timing recovery is useful because the A/D converter **129** samples the downstream signal at its particular sampling frequency, which approximates but may not equal the symbol rate of the HNM **28** that transmitted the signal.

[0078] In a second embodiment of the modem **114**, I/Q modulation occurs at the DSP **130** of the modem **114** (because the RF unit **112** uses a standard mixer; thus, this embodiment has no I/Q compensation block **144**. Also, the receiver front-end **146** of this embodiment includes a down-converter block and low-pass filter (both not shown) to perform the I/Q demodulation.

[0079] The output of the receiver front-end **146** passes to a burst AGC block **152**, which provides digital gain control

per burst to optimize the signal level at the input to the equalizer **154**. From the burst AGC block **152**, the signal passes to a decision feedback equalizer (DFE) **154**. The DFE **154** includes a feed forward equalizer (FFE) **156** and a decision feedback filter (DFF) **158**. To overcome frequency offset between the transmitting and receiving HNMs **28**, the DFE **154** includes a rotator **160**, which is applied at the output of the FFE **156**. A carrier recovery PLL **162** sets the correction frequency of the rotator **160**. The output of the rotator **160** minus the output of the DFF **158** enters a slicer circuit **164** to make a decision on the received symbol. The error signal **166** is equal to a distance between the decided symbol and the input to the slicer circuitry **164**. The error signal **166** gives an indication to the amount of noise and the quality of the received signal and decisions. The error signal **166** is also used for the adaptation of the equalizers during packet receiving. The received symbols sent to the framer **132** for de-mapping, de-forward error correcting (FEC), and de-framing, to extract the transmitted data bits, which are delivered to the MAC (Medium Access Controller) **92** for upper layer processing.

[**0080**] On the upstream path **120**, the framer **132** receives data bits from the MAC **92**, which frames the bits. A mapper **170** maps the encoder-framed bits to generate the transmitted QAM symbols. A transmitter front-end **172** processes the QAM symbols. The transmitter front-end **172** includes a pulse shaper **174**, a digital power gain adjuster **176** for fine tuning the transmitted power, and a clipper **176** to reduce the peak-to-average ratio of the transmitted signal to relax RF transmitter requirements. An interpolator **180** synchronizes the transmitted symbol rate with the symbol rate of the master HNM **28**. The modulator timing VCO loop **182** performs the synchronization.

[**0081**] Because QAM symbols are complex numbers, the signal leaving the interpolator **180** is a complex signal, that is, the signal is made of two streams of data (a real channel and an imaginary channel). If the DSP **130** is implementing I/Q demodulation, the DSP **130** includes an I/Q frequency up-converter **184** to create a real signal. An inverted-sinc filter **186** then shapes the resulting I/Q signal band and delivers the shaped signal to the D/A converter **134**.

[**0082**] If the DSP **130** is not implementing I/Q demodulation, because the RF unit **112** is performing the I/Q demodulation, the I/Q frequency up-converter **184** is not used. The signal from the interpolator **180** remains complex and the dual D/A converter convert the two (real and imaginary) signal streams into two analog channels (I and Q). Also, in this embodiment, a transmitter I/Q compensator **188** is employed to handle RF imperfections.

[**0083**] The DSP portion **130** of the modem **114** also includes a preamble detector and channel estimation block **190** (hereafter preamble detector), which is communication with the I/Q compensation block **144** (if any), the receiver front-end **146**, a cycle start detector **192**, and the burst AGC block **152**. The preamble detector **190** also controls the gain of the amplifiers **124** and **140** of the RF unit **112** to provide power control, as described above. The preamble detector **190** provides channel estimations, RF imperfection estimations, and synchronization information for the PLL loop **150**. The preamble detector **190** initializes the DFE **154** for each burst. Other functions of the preamble detector **190** include detecting an existing burst in the downstream path **118**, distinguishing between types of bursts (described below), and detecting a cycle start signal. Depending upon the type of burst detected, the modem **114** adopts a different behavior.

[**0084**] The MAC (**FIG. 3**) layer **92** controls the transmission protocol (hereafter MAC protocol) by which the HNMs **28** communicate with each other over the coax backbone **20**. In the home network, one of the HNMs **28** connected to the coax backbone **20** is designated as a master HNM **28**. In one embodiment, such designation can occur by manually configuring that one HNM **28** to operate as the master HNM **28**. In another embodiment, the HNMs **28** elect the master HNM **28**. Functionality of the master HNM **28** includes: 1) assigning addresses to each of the HNMs **28** and devices in the home network; 2) synchronizing the HNMs **28**; 3) managing isochronous and asynchronous transmissions over the backbone **20** to avoid collisions between transmitting HNMs **28**; 4) allocating bandwidth to the HNMs **28**; and 5) registering new HNMs **28**. Also, a master HNM that is incorporated in or in communication with a STB (or other device that has access to the cable head-end) operates as a window into the home network through which someone at the cable head-end can monitor and diagnose the operation of the home network **10**.

[**0085**] Communication on the coax backbone **20** between HNMs **28** is isochronous or asynchronous, in accordance with the MAC protocol. To exchange messages with each other, the HNMs **28** transmit isochronous and asynchronous bursts over the backbone **20**. Each burst has a predefined structure (described below) that encapsulates one or more packets. The header of the packets includes the destination address of the target device for that packet—each packet has its own destination). The data in such packets convey the messages (i.e., the meaning of the communications). The devices **33** on the local buses **35** produce and send the packets to the appropriate HNM **28** to be prepared into bursts. A single burst can include packets that originate from more than one device **33** on a local bus **35** or that are targeted to more than one device **33** on a local bus **35**. In general, the MAC protocol ensures that bursts transmitted by different HNMs **28** over the backbone **20** do not collide, or if collisions do occur because of errors or noise over the backbone **20**, the home network can recover and resume normal operation.

[**0086**] The MAC protocol supports at least seven types of bursts: 1) cycle start bursts; 2) data bursts; 3) registration start bursts; 4) registration bursts; 5) fairness cycle start bursts, 6) empty bursts, and 7) self-train bursts, each described in more detail below. Only the master HNM **28** issues cycle start, fairness cycle start, and registration start bursts.

[**0087**] The cycle start burst indicates the start of an isochronous cycle and of a transmission cycle (described below). Each cycle start burst carries CBR data of the master HNM **28**. The CBR data in the cycle start burst can include management data, an identity of each HNM **28** that is going to transmit a data burst during the upcoming CBR period **228**, and a transmission order for the HNMs **28** to follow during the CBR period **228**. The other HNMs **28** in the home network **10** synchronize to this cycle start burst.

[**0088**] Fairness cycle start bursts mark the start of a fairness cycle (and a UBR period). Registration start bursts indicate a beginning of a registration period that is available for a new HNM **28** to use, as described below.

[0089] Any HNM **28**, including the master HNM **28**, can issue data bursts, empty bursts, and self-train bursts. Data bursts carry data and management information. Empty bursts carry no data. A HNM **28** transmits an empty burst when it has no data to transmit during its allotted time. The master HNM **28** transmits an empty burst if another HNM **28** does not use its allotted to time (and does not issue an empty burst). Self-train bursts operate to calibrate the HNM **28** to the transmission characteristics of the home network.

[0090] HNMs **28** other than the master HNM **28** issue registration bursts to register with the master HNM **28**, and thus with the home network **10**. Within the registration burst, the registering HNM **28** can request a guaranteed bandwidth and indicate the amount of bandwidth desired.

[0091] **FIG. 6** shows an exemplary embodiment of the structure of each burst **200** that the HNMs **28** transmit over the coax backbone **20**. Each burst **200** is a sequence of segments that includes a preamble **202** (having a periodic preamble **210** and an aperiodic preamble **212**), a Phy header **204**, data **206**, and a postamble **208**.

[0092] The preamble **202** signifies the start of the burst **200** and the type of burst **200**. In general, the preamble **202** enables the modem **114** of the HNM **28** to synchronize the carrier and timing loops **162**, **150**, respectively, and the equalizers **156**, **158** to the transmitted burst **200**. The preamble **202** also enables the setting of the gains of the analog amplifiers **124**, **140** in the RF unit **112**.

[0093] The periodic preamble **210** is a predetermined sequence that enables the modem **114** within the HNM **28** to achieve carrier sense, carrier and timing synchronization, received-power level estimation, and initial channel estimation. In one embodiment, the length of the periodic preamble **210** indicates the type of burst. The length is determined by the number of times a sequence of symbols (e.g., 32 symbols) is repeated. For example, in one embodiment, if the 32-symbol sequence is repeated 4 times then the burst is a data burst, 6 times means that the burst is a cycle start burst, 8 times indicates a fairness cycle start burst, and 10 times indicates a registration start burst.

[0094] The pattern of symbols in the periodic preamble **210** can also be used to indicate the type of burst. For example, two different burst types can have the same periodic preamble length, but be distinguished by different symbol patterns (e.g., inverting the sign of the signal for every other repeated symbol sequence). For example, in the embodiment described above, the periodic preamble of the empty burst has a 32 symbol sequence that is repeated four times, which is the same length as the periodic preamble of the data burst. Also, for the self-train burst the 32-symbol sequence is repeated 8 times, which is the same length as the periodic preamble of the cycle start burst. For the empty and self-train bursts, however, the sign alternates for every other repeated symbol sequence, which distinguishes these bursts from the data and cycle start bursts (which do not use an alternating sign), respectively.

[0095] There are two classes of bursts: bursts that require channel estimation and bursts that do not. Bursts that require the channel estimation by the receiving HNM **28** include data bursts, cycle start bursts, fairness start bursts, registration bursts, and registration start bursts. Each of these burst types has a preamble **202** of a fixed length; that is, cycle start bursts have a preamble of a first fixed length, fairness start bursts have a preamble **202** of a second fixed length, etc. The distinguishing of burst types by the length of the preamble **202** assures that the receiving HNM **28** achieves real-time performance without the need for extended complexity and buffering. For attaining real-time performance, encoding the burst type by the periodic preamble length is more advantageous than embedding the burst type in the header, as is the usual practice with lower rate systems. Encoding the burst type by the periodic preamble length rather than embedding the burst type in the header avoids a time consuming process of extracting the data embedded in the header to determine the burst type.

[0096] Bursts that do not require channel estimation include empty (or null) bursts and self train bursts, which in general have a shorter preamble **202** than the other types of bursts. As described above, the periodic preamble **210** of the preamble **202** for these bursts have an alternating sign (signals of the odd periods are the inverse of signal of the even periods). Although not useful for channel estimation, this type of preamble **202** is useful for burst type identifications.

[0097] The modem **114** uses the predetermined aperiodic preamble **212**, which is a pseudo-random sequence, to refine the channel estimation and to initialize the modem equalizers **154**, **156**.

[0098] The Phy header **204** includes the parameters that are required by the DSP **130** and FEC **132** to decode the bursts (i.e., a scrambler seed, FEC parameters, interleaver parameters, constellation sizes, etc.). In some embodiments, the Phy header **204** also includes the source address of each device **33** originating the burst. In one embodiment, the Phy header **204** conveys 36 bits of information on 18 QPSK (Quadrature Phase Shift Keying) symbols.

[0099] The data **206** carries the QAM symbol data. The constellation is the same for each HNM **28** (when transmitting), except when the HNM **28** is transmitting a registration burst. (Registration bursts are always QPSK, which is the default constellation size for new HNMs **28** requesting to join the home network **10**.)

[0100] The postamble **208** is a predefined sequence of BPSK (Binary Phase Shift Keying) symbols that the modem **114** uses (along with any gap that follows the burst **200**) to recognize as the end of the burst **200**.

[0101] **FIG. 7** shows an embodiment of an exemplary sequence **220** of bursts, separated by transmission gaps, produced by four HNMs **28** (HNM **0**, HNM **1**, HNM **2**, and HNM **3**) on the coax backbone **20** in accordance with the MAC protocol. Transmission of the bursts over the backbone **20** occurs as a sequence of cycles. Each cycle carries information that enables the HNMs **28** to recover timing and other parameters accurately for the successful receiving and transmitting of bursts.

[0102] As shown, the sequence of cycles includes three types of communication cycles, 1) transmission cycles **222**, 2) fairness cycles **224**, and 3) ACK cycles **226**, and four types of periods, 1) constant bit rate (CBR) periods **228**, 2) unspecified bit rate (UBR) periods **230**, 3) registration periods **232**, and 4) ACK periods **226**.

[0103] Each transmission cycle **222** starts when the master HNM **28** transmits a cycle start burst and ends before the

master HNM **28** transmits the next cycle start burst. Each transmission cycle **222** has a predetermined duration (e.g., approximately 1 ms) and starts with a CBR period **228**. During this CBR period **228**, each HNM **28** that has been allocated bandwidth by the master HNM **28** transmits one CBR burst. (CBR bursts can include one or more CBR packets aggregated together and transmitted during the CBR period.) Each HNM **28** that has been allocated time within the CBR period **228** transmits one burst, but the size (or length) of that burst depends upon the amount of bandwidth allocated to that HNM **28** and upon the amount of data ready for transmission in that particular transmission cycle. If at a particular transmission, the HNM **28** does not have any data ready for transmission, the HNM **28** transmits an empty (or null) burst. This empty burst notifies the next HNM **28** in the transmission order that the next HNM **28** can now transmit during the CBR period **228**. The HNMs **28** transmit bursts over the backbone **20** in an order predefined by the master HNM **28**. For example, as shown in FIG., **7**, the transmission order during each CBR period **228** is HNM**0** (the master HNM) followed by HNM**1** and then by HNM**3**. (In this example, HNM**2** has no allocated bandwidth during the CBR period **228**.) The master HNM **28** can change the amount of allocated bandwidth and the order of transmission, such as when a new HNM **28** registers for guaranteed quality of service. The master HNM **28** communicates such changes to the other HNMs **28** in the data field **206** of the cycle start burst.

[0104] If, at the end of the CBR period **228**, time remains in the current transmission cycle, a UBR period **230** or a registration period **232** and/or an ACK period **226**, follows the CBR period **228**. The UBR period **230** is part of a fairness cycle **224**, as described below. During the UBR period **230**, each HNM **28** can send a self-calibration (or training) burst before sending a UBR burst. (A UBR burst is a burst that is transmitted during the UBR period **230**.)

[0105] A fairness cycle **224** represents the time over which every HNM **28** transmits one UBR burst over the coax backbone **20**. (If a HNM **28** has no data to transmit, the HNM **28** transmits a null burst in its allotted time.) The fairness cycle **224** can span one or more transmission cycles **222**. Accordingly, during a fairness cycle **224**, UBR periods **230** are interleaved with CBR periods **228**.

[0106] More specifically, each fairness cycle **224** begins with a UBR burst from the master HNM **28** (called a fairness start burst) and completes after all of the other registered HNM **28** transmits a UBR burst. The HNMs **28** transmit the UBR bursts according to a certain order, starting with the master HNM **28** (here, HNM **0**). The UBR bursts do not disturb the synchronization of the transmission cycle; that is, transmission cycles **222** and, thus, CBR periods **228**, occur regularly (with some jitter, described below), even if each registered HNM **28** has not yet transmitted an UBR burst. (In such an instance, a fairness cycle **224** spans more than one transmission cycle **222**.) Jitter occurs when one of the HNMs **28** is presently transmitting a UBR burst while the start of a new transmission cycle **222** is due to begin. Instead of starting the new transmission cycle **222**, the HNM **28** is permitted to complete the UBR burst, which extends the present transmission cycle **222** beyond the predefined transmission cycle period. Jitter is the measure of the amount of time that the UBR period extends beyond the expected end of the transmission cycle **222** (i.e., start of the next CBR period **228**).

[0107] At the end of a fairness cycle **224**, the master HNM **28** transmits a registration start burst to initiate a registration period **232**, which extends for a predefined period. (The registration start burst marks the end of the fairness cycle **224**.) The master HNM **28** determines when to start the registration period **232**. In some embodiments, a registration period **232** can occur as often as after each fairness cycle **224**. In other embodiment, the registration period **232** occurs less frequently, such as after a plurality of fairness cycles **224**. As described above, generally, with respect to UBR periods **230**, the registration period **232** can extend beyond the end of the current transmission cycle **222**, thus delaying the start of the next transmission cycle **222**.

[0108] The registration period **232** is available for use by new HNMs **28** (i.e., HNMs **28** that have been added to the home network and have not yet participated in network communications). During the registration period **232**, new HNMs **28** register with the master HNM **28**, transmit a self-train burst to adapt the Phy parameters, and if already calibrated, transmits a registration burst. An HNM **28** that transmits a registration bursts expects to receive from the master HNM **28**, in a subsequent cycle start burst, a response that includes a new identity for the registering HNM **28** and a position in the UBR transmission order in which to transmit UBR bursts.

[0109] During a given registration period **232**, more than one HNM **28** might attempt to register with the master HNM **28**. Accordingly, collisions between HNMs **28** can occur. However, the number of HNMs **28** participating in any given registration period **232** is typically few; thus, the likelihood of collisions on the home network **10** is generally low. Also, colliding HNMs **28** that do not successfully register during the present registration period **232** retransmit the registration request during a subsequent registration period **232**. Each HNM **28** independently and randomly determines the number of registration cycles to wait before retransmitting a registration request. This random and independent retransmission reduces the likelihood that the colliding HNMs **28** will collide again. Further, each HNM **28** that successfully registers during a given registration period **232** does not communicate during subsequent registration periods (subsequent transmissions by successfully registering HNMs **28** occur during the time slot allocated to that HNM **28**).

[0110] During a registration period **232**, the master HNM **28** receives the registration bursts, if any, from new HNMs **28**. During the CBR period **230** immediately following the registration period **232**, the master HNM **28** responds to one of the registration bursts with a cycle start burst that includes a master management message within the data field **206** of the cycle start burst. The master management message indicates to the registering HNM **28** where that HNM **28** appears in the transmission order during the CBR period **230** and, if required, the amount of bandwidth that has been allocated to the HMN **28**.

[0111] If the master HNM **28** receives more than one registration request, the master HNM **28** responds to only one of the registration requests, and the other registering HNMs **28** retransmit during a subsequent registration period

as described above. The master HNM **28** identifies the HNM **28** to which the master is responding in the Phy header **204** of the cycle start burst.

[**0112**] When the registration period **232** times out, the master HNM **28** transmits an ACK burst, marking the start of an ACK period **226** (or cycle). In one embodiment, the first ACK burst (i.e., ACK**0**) marks the start of the ACK period **226**. In another embodiment, the registration start burst marks the start of the ACK period **226**. During the ACK period **226**, each HNM **28**, starting with the master HNM **28**, transmits an ACK corresponding to the UBR bursts during the previous fairness cycle **224**.

[**0113**] ACK bursts are used for UBR traffic. Each HNM **28** sends an acknowledge message (ACK) for each burst that the HNM **28** receives. If the transmitting HNM **28** does not receive an acknowledgement from one of the destinations, it retransmits the packets. Using acknowledgment messages improves the performance of the home network **10** in cases of noise that corrupt some burst traffic. Each burst is an aggregation of packets destined for one or more destinations. If an ACK is not received from one or some of the destinations in the burst, the messages corresponding to the unacknowledged packets are retransmitted.

[**0114**] After the ACK period **226**, a gap can appear in the communications on the coax backbone **20** when the master HNM **28** is still processing the last ACK burst of the ACK period **226**. Then, the master HNM **28** marks the end of the ACK cycle and the start of the next fairness cycle **224** by transmitting a UBR burst. If the expected time for the start of the next transmission cycle **222** arrives, the master HNM **28** transits a cycle start burst.

[**0115**] FIGS. **8**A-**8**B show an embodiment of a process by which the master HNM **28** controls communication on the coax backbone **20**. To mark the beginning of a transmission cycle **222**, the master HNM **28** sends (step **240**) a cycle start burst onto the backbone **20**. The cycle start burst can include master management data, an identity of each HNM **28** that is going to transmit a data burst during the upcoming CBR period **228**, and a transmission order for the HNMs **28** to follow during the CBR period **228**. The listed identities are of those HNMS **28** that have requested from the master HNM **28** a guaranteed bandwidth. In one embodiment, the cycle start burst includes information regarding the HNMs **28** that are to transmit a UBR burst during the transmission cycle, such as a transmission order. In another embodiment, the cycle start burst also includes the CBR transmission order information.

[**0116**] The master HNM **28** monitors (step **242**) the backbone **20** for CBR bursts.

[**0117**] When the master HNM **28** determines that the CBR period **228** has ended, and if a previous ACK cycle **224** has ended, the master HNM **28** issues (step **246**) a UBR burst to start a new ACK cycle. The master HNM **28** monitors (step **248**) the backbone **20** for subsequent UBR bursts. The master HNM **28** maintains (step **250**) a timer to determine when the present transmission cycle **222** is to end. When the timer indicates the end of the transmission cycle **222**, the master HNM **28** starts the next CBR period **228** by issuing (step **252**) a cycle start burst. Before issuing the cycle start burst, the master HNM **28** waits for any burst in progress to complete.

[**0118**] When the master HNM **28** determines (step **254**) that the current fairness cycle **224** has ended, the master HNM **28** transmits (step **256**) a registration start burst to initiate a registration period **232**. (In one embodiment, the master HNM **28** can skip one or more fairness cycles **224** before initiating the registration period **232**.) During the registration period **232**, the master HNM **28** receives (step **258**) zero, one or more registration requests. The master HNM **28** replies (step **260**) to one registration request during the next CBR period.

[**0119**] The master HNM **28** maintains (step **266**) a timer to determine when the registration period ends. When the timer indicates the end of the registration period, the master HNM **28** sends (step **268**) an ACK burst to mark the start of the ACK cycle. During the ACK cycle, the master HNM **28** determines (step **270**) when the present transmission cycle ends and issues (step **272**) a cycle start burst to start the next CBR period **228**. In one embodiment, the master HNM **28** waits until the ACK cycle ends before sending the cycle start burst. Also during the ACK cycle, the master HNM **28** monitors (step **274**) the backbone **20** for ACKs from the other HNMs **28**. Upon detecting completion of the ACK cycle, including waiting for an ACK for its own UBR burst (i.e., if the ACK was requested in that UBR burst), the master HNM **28** issues (step **276**) a UBR burst (a fairness cycle start burst) to start a new fairness cycle or a cycle start burst to start a new transmission cycle if the expected time to start a new transmission cycle has arrived.

[**0120**] **FIG. 9** shows an embodiment of a process by which each HNM **28** in the home network, other than the master HNM **28**, communicates over the coax backbone **20**. In step **280**, the HNM **28** receives a cycle start burst and determines from the cycle start burst its positions in the transmission orders for CBR and UBR and its allocated amount of bandwidth. The cycle start burst operates to synchronize communications between the HNM **28** and the master HNM **28**. The HNM **28** monitors (step **282**) the backbone **20** for CBR bursts, and after waiting for its own allotted time in the CBR transmission order, if any, transmits (step **284**) a CBR burst. By monitoring the backbone **20** for CBR bursts, the HNM **28** determines when the CBR period is over (each HNM **28** can determine the list of HNMs **28** participating in the CBR period from the information provided by cycle start burst).

[**0121**] After the CBR period **228** ends, the HNM **28** determines (step **286**) whether it can transmit a UBR burst. To be enabled to transmit a UBR burst, in one embodiment the HNM **28** requires (step **288**) a grant from the HNM **28** that precedes it in the transmission order. After transmitting the UBR burst, the grant passes (step **290**) to the next HNM **28** in the UBR transmission order. In another embodiment, the HNM **28** awaits its turn (step **288'**) to transmit the UBR burst by monitoring the backbone **20** and counting the number of UBR bursts that were transmitted since the start of the current fairness cycle **224**.

[**0122**] In step **292**, the HNM **28** detects an ACK burst (or in one embodiment a registration start burst) on the backbone **20**, marking the start of an ACK cycle. The HNM **28** determines (step **294**) when to transmit the ACK based on its position in the transmission order. If the HNM **28** has an ACK to transmit (depending upon whether it received a UBR requesting an ACK during the previous fairness cycle),

the HNM **28** transmits the ACK; otherwise the HNM **28** transmits an empty (null) burst. The HNM **28** can make this determination by monitoring the backbone **20** for ACK bursts or by waiting to receive a grant from the HNM **28** immediately preceding in the UBR transmission order.

[**0123**] **FIG. 10** shows an embodiment of a process by which a new HNM **28** becomes part of home network **10**. Upon detecting (step **296**) a registration start burst, the new HNM **28** issues (step **298**) a Self_Train Burst (for calibrating its PHY) or a registration request. If the new HNM **28** does not receive a reply indicating that the master HNM **28** has registered the new HNM **28**, the new HNM **28** transmits (step **298**) another registration request in a subsequent registration period. The new HNM **28** continues to transmit registration requests during subsequent registration periods until the new HNM **28** becomes registered. In one embodiment, the new HNM **28** randomly selects how many registration periods to skip before retransmitting the registration request. After becoming registered, the new HNM **28** transmits bursts during the UBR period as described above.

[**0124**] Referring back to **FIG. 1**, the home network includes a plurality of local buses **35** each connected to the coax backbone **20** network by an HNM **28**. One of the HNMs **28** is the master HNM **28**, and the local bus **35** that is connected to the master HNM **28** is the prime bus. If the same HNM **28** connects multiple local buses **35** to the coax backbone **20**, each local bus **35** is of a different type (e.g., 1394 , Ethernet, USB); if that HNM **28** is the master HNM **28** of the home network **10**, then each of such local buses **35** is deemed to be the prime bus (of its particular type).

[**0125**] **FIG. 11** shows one embodiment of the home network **10**, in which the backbone **20** connects four IEEE 1394 local buses through different HNMs **28**. In this embodiment, each HNM **28** shown operates as a 1394-to-coax backbone bridge between the backbone **20** and the 1394 local bus connected to that HNM **28**. Devices **33** that are connected to one of the 1394 buses are referred to as 1394 devices or nodes. Although the backbone **20** appears as a ring, this is for purposes of showing that the HNMs **28** are connected to the backbone **20**, and not intended to show that the backbone **20** operates as a ring network.

[**0126**] There are two embodiments of the 1394-to-coax bridge. In a first embodiment, each bridge operates according to the IEEE 1394.1 standard. In a second embodiment, the bridge emulates the plurality of 1394 buses as a single bus so that nodes connected to these 1394 local buses can communicate with each other as though on the same 1394 bus (i.e., using the short haul 1394 protocol).

[**0127**] For the second embodiment, to achieve the appearance that all 1394 devices in the home network are residing on the same 1394 short haul bus, modifications are made to the 1394a Phy and Link layers **102**, **104**. In brief, the modifications include the following:

[**0128**] 1) at the Phy layer **102**, modifications to the reset, initialization, and identification processes enable device (or node) discovery throughout the home network **10**; and

[**0129**] 2) at the Link layer **104**, the addition of routing tables (in one embodiment, one table is for isochronous traffic, and another table is for asynchronous traffic, in another embodiment, one routing table handles both traffic types.) and the forwarding of packets (incorporated within bursts) to the coax backbone **20** enable delivery of such packets to remote buses over the backbone **20**.

[**0130**] The Link layer **104** uses the asynchronous routing table to determine whether the destination identifier of an asynchronous packet is on a remote bus (other than the local bus from which the packet originates). If the destination is on a remote bus, the Link layer **104** sends an ACK_pending packet to the originator of the packet (i.e. source node) and forwards the asynchronous packet to the backbone **20**. The HNM **28** incorporates the asynchronous packet within a burst, which can includes other packets targeted to other destinations. If the destination is not on a remote bus, the Link layer **104** operates as a standard Link layer to process the asynchronous packet.

[**0131**] Asynchronous packets between devices on the same local bus **35** remain local to that bus **35**. The HNM **28** does not forward such packets to the backbone **20**. The HNM **28** routes asynchronous packets destined to a remote device according the asynchronous routing table that resides in that HNM **28** and responds to the packet by sending an ACK_ending packet to the packet originator). The asynchronous routing table defines remote HNMs **28** according to the Phy_ID in the asynchronous packet destination field. The HNM **28** forwards isochronous channel packets and asynchronous streams through the backbone **20** to all the other buses or to other buses according to the isochronous routing table. One clock reference exists for the home network **10**. The prime bus generates the common clock, which the HNMs **28** connected to at the other buses each recover.

[**0132**] Referring again to **FIG. 11**, each local 1394 bus has the following features. Each 1394 node receives a unique Phy identification number (Phy_ID) (**0-62**), and each HNM **28** receives the same Phy_ID number (a number that is unique from those assigned to the nodes). For each local bus **35**, the bus identification number (Bus_ID) is equal to 0×3FF. The home network **10** has one Isochronous Resource Manager (IRM), which is one of the HNMs **28**, typically the master HNM **28**. Each isochronous channel and each asynchronous stream that is generated in the home network **10** receives its channel number and bandwidth allocation from the single IRM. Each local 1394 bus **35** has its own Cycle Master, which is the HNM **28** of that bus. Each local bus **35** has its own Bus Manager. Arbitration, signaling and data transfers are local to each local bus **35**.

[**0133**] Each HNM **28** performs various operations to cause the other remote buses to appear as though on its local bus. Such operations include:

[**0134**] 1) sending self-identification (Self_ID) packets according to a reset procedure used for discovering 1394 nodes;

[**0135**] 2) forwarding streams through the backbone **20**, with updating timestamp of 61883 isochronous packets (the 61883 is a standard that specifies transport of MPEG signals over the 1394 and allows the video transfers between 1394 devices);

[**0136**] 3) sending acknowledge pending (ACK_pending) packets to the source of asynchronous packets that are to be delivered to other remote buses according to the asynchronous routing table

(responding with an ACK_pending packet satisfies a 10 uSec requirement for ACKs in standard 1394 communications, although an acknowledgement issued by the target of the packets can experience a latency over the backbone **20** of greater than 10 uSec);

[**0137**] 4) forwarding asynchronous packets that are to be delivered to other remote buses through the backbone **20** according to the asynchronous routing table;

[**0138**] 5) receiving asynchronous packets over the backbone **20** from other remote buses targeted to a device on the local bus of the HNM **28**; and

[**0139**] 6) distributing a reset that occurs on one bus to the other buses.

[**0140**] To initialize the home network **10**, the HNMs **28** perform a global reset process. During the global reset process, the home network **10** conducts an initialization and identification process. As a result, an emulated bus structure is created where all 1394 devices in the network **10** see each other, and each 1394 device has a unique Phy_ID. After the end of initialization and identification processes, each HNM **28** appears as a root 1394 node with three Phy ports.

[**0141**] **FIG. 12** is an embodiment of the emulated bus structure from the perspective of each of the HNMs **28**. Each HNM (HNM**1**, HNM**2**, HNM**3**, HNM**4**) is a root node for its respective local bus. Port **1** (P**1**) of each HNM **28** is connected to the local bus. Phy port **0** (P**0**) and Phy port **2** (P**2**) appear to all 1394 devices on the local bus either as not connected or as a branch of the bus. The branch appears to contain other 1394 devices that are physically located in other buses but logically appear to the local bus devices as if they are reside on the same bus. For example, for HNM **1**, the P**0** port appears as unconnected, the P**1** port is connected to the physical bus of HNM**1**, and the P**2** port is an emulation of the other local buses in the home network **10**, namely, remote buses of HNM **2**, HNM **3**, and HNM **4**. As another example, for HNM **2**, the P**0** port is an emulation of the remote bus of HNM **1**, the P**1** port is connected to the physical bus of HNM**2**, and the P**2** port is an emulation of the remote buses of HNM **3**, and HNM **4**. Thus, all existing 1394 devices in the network seemingly reside on the same bus. Therefore, any application that works with 1394 buses is supported over the entire home network **10**.

[**0142**] Each HNM **28** generates two types of self-ID packets: 1) HNM **28** self ID_packets, and 2) emulated self-ID packets. HNM self-ID packets issued by each HNM **28** describe the three-port root node (shown in **FIG. 12**) for that HNM **28**. Emulated self-ID packets describe all nodes on the other HNM local buses. Each emulated self-ID packet represents the bus structure of two port nodes (P**0** and P**2**) that are connected serially to the root node as one branch.

[**0143**] Initialization of the home network **10** occurs after the backbone **20** has been initialized, that is, the number (N) of HNMs **28** is known, each HNM **28** has its own number (1 through N), and a master HNM **28** is selected. When the initialization ends, the home network **10** is operational.

[**0144**] Referring to **FIG. 13**, during initialization, the master HNM **28** sends (step **304**) through the backbone **20** a first global reset packet to all the HNMs **28**. The reset is performed (step **308**) in each bus with the root (i.e., the appropriate HNM **28**) governing the reset process. After the reset, each HNM **28** sends (step **312**) an updating bus message to the master HNM **28**. The updating bus message includes: 1) the Phy_JD of the HNM **28** (i.e., the number of nodes on the bus -1); 2) the link state (active/not active) for each node on the local bus, and 3) an indicator for each node on the local bus whether that node is "bridge capable." (A "bridge capable" device is a 1394 device that is compliant with the IEEE 1394.1 standard.) Also, after the reset, each bus functions locally.

[**0145**] From the updating bus messages obtained from the HNMs **28**, the master HNM **28** generates (step **316**) a network table. For each HNM **28**, the network table includes the number of nodes in the local bus of that HNM **28**, the link status (active/inactive) of each node in the local bus of that HNM **28**, and the bridge capabilities for each node in the local bus of that HNM to **28**. After producing the network table, the master HNM **28** transmits (step **320**) the network table to each HNM **28** using an update_network_table message. The update_network_message includes the time for generating the next bus reset. Each HNM **28** updates (step **324**) its own network table accordingly.

[**0146**] At the time specified in the update_network_table message, each HNM **28** generates (step **328**) a bus reset. After the network completes the initialization, the home network undergoes a network update process. In step **332**, if there are no topology changes in the local bus, the reset is not propagated to other buses. After the local bus reset sequence is completed and the HNM **28** port obtains its new Phy_ID, this information is propagated (step **334**) by a new_phy_id message to the master HNM **28**. The master HNM **28** updates (step **336**) the network table and sends (step **340**) a update_network_table message to the other HNMs **28**. Upon receiving the update_network_table message, each HNM **28** proceeds as described above, that is, by locally resetting the bus (step **308**), updating the network table (step **324**), and emulating the home network **10** in that bus.

[**0147**] After the completion of the initialization of the home network, each HNM **28** handles asynchronous packets received from the bus (inbound—upstream from local bus to backbone) and asynchronous packets received from the backbone **20** (outbound—downstream from backbone to the local bus). Although described in terms of local 1394 buses, the principles of packet handling applies also to other bus types, such as USB, Ethernet, etc.

[**0148**] **FIG. 14** shows an embodiment of a process for use by each HNM **28** when handling inbound asynchronous packets. For inbound asynchronous packets, each HNM **28** forwards such packets to the backbone **20** based on the physical ID (Phy ID) destination address, the physical ID of the HNM **28**, and the network table. During the initialization process, each HNM **28** maintains two registers, one with the Phy_ID of the node with the lowest ID on its local bus and one with the highest ID on the local bus. A Phy_ID between the highest and lowest IDs is on the local bus.

[**0149**] In step **354**, If the bus ID is equal to 0×3FF, which identifies the local bus as a 1394a bus, the HNM **28** performs the following actions:

[**0150**] 1. In step **358**, if the Phy_ID is equal to 0×3F**16**, this indicates that the packet is a broadcast

packet. In step **362**, if the HNM **28** is the master HNM **28**, then the HNM **28** forwards (step **366**) and processes (step **370**) the packet. If the HNM **28** is not the master HNM **28**, then the HNM **28** forwards (step **374**) the packet. In this instance, the non-master HNM **28** does not process the broadcast packet, thus preventing broadcast packets from accessing non-master HNMs **28**. Access to non-master HNMs **28** is the privilege of master HNMs **28**, not devices on the local bus.

[**0151**] 2. In step **378**, if the Phy_ID does not correspond to a node on the local bus, the HNM **28** forwards (step **382**) the packet to the backbone **20** and issues (step **386**) an ACK_pending (busy or retry) packet to the local bus.

[**0152**] 3. In step **390**, if the Phy_ID corresponds to a node on the local bus (but not the Phy_ID of the HNM **28**), the HNM **28** discards (step **392**) the packet.

[**0153**] 4. In step **398**, if the Phy_ID is that of the HNM **28**, the HNM **28** processes (step **394**) the packet if the HNM **28** is the master HNM **28**, and forwards (step **396**) the packet if the HNM **28** is not the master HNM **28**. Again, access to non-master HNMs **28** is the privilege of master HNMs **28**, not devices on the local bus.

[**0154**] If the bus ID does not equal 0×3FF, the HNM **28** forwards (step **398**) the packet and issues an ACK_pending packet to the local bus.

[**0155**] **FIG. 15** shows an embodiment of a process for use by each HNM **28** when handling outbound asynchronous packets. For outbound asynchronous packets, each HNM **28** forwards such packets from the backbone **20** to the local bus **35** based on the physical ID destination address, the physical ID of the HNM **28**, and the network table. If addressed to the address of the HNM **28**, a packet passes to the HNM **28** only if the source of that packet is the master HNM **28** (a flag in the packet can indicate that the source of the packet is the master HNM **28**).

[**0156**] In step **404**, if the bus ID is equal to 0×3FF, the HNM **28** performs the following actions:

[**0157**] 1. In step **408**, if the Phy_ID is equal to 0×3F**16**, this indicates that the packet is a broadcast packet; if so, the HNM **28** forwards (step **412**) the packet to the local bus.

[**0158**] 2. In step **416**, if the Phy_ID does not correspond to a node on the local bus, the HNM **28** discards (step **420**) the packet.

[**0159**] 3. In step **424**, if the Phy_ID corresponds to a node on the local bus (but not the Phy_ID of the HNM **28**), the HNM **28** forwards (step **428**) the packet to the local bus.

[**0160**] 4. In step **432**, if the Phy_ID is that of the HNM **28**, the HNM **28** processes (step **436**) the packet if the HNM **28** is the master HNM **28**, and discards (step **440**) the packet if the HNM **28** is not the master HNM **28**.

[**0161**] If the bus ID does not equal 0×3FF, the HNM **28** forwards (step **444**) the packet to the local bus.

[**0162**] For isochronous streams, in one embodiment, each HNM **28** forwards to the local bus **35** those streams that are received from the backbone **20** and forwards to the backbone **20** those streams that are received from the local bus **35**. The HNMs **28** forward the packets in these streams as the packets are received; that is, the HNMs **28** do not need to filter these packets.

[**0163**] **FIG. 16** shows another embodiment of the DPU **14'** including a first splitter-combiner **460**, which receives signals from and transmits signals to the cable television/internet network **18**. The splitter-combiner **460** distributes those signals to the components of the DPU **14'** from the cable television/internet network **18** and collects signals from the components of the DPU **14'** for transmission to the cable television/internet network **18**. Similarly a second splitter-combiner **464** receives signals from and transmits signals to the various rooms **30** through the coax cables **22**. The splitter-combiner **464** distributes signals received from the various rooms **30** to the components of the DPU **14'** and distributes signals from the components of the DPU **14'** to the various rooms **30**. The embodiment shown in **FIG. 11** uses the frequency band of 5-45 Mhz for the home network signal, and the frequency band 50-850 MHz for the cable TV and Internet provider signals.

[**0164**] The components of the DPU **14'** can be modified to achieve the other frequency bands described above for carrying the home network signal.

[**0165**] The components of this embodiment of the DPU **14'** include a high-pass filter **470** connected between the first splitter combiner **460** and the second splitter combiner **464**. The high-pass filter **470** allows the transparent connection of legacy TV cable network in the forward and reverse channels, while blocking the specific frequency channels that are allocated for the internal home network signal. In one embodiment, this high-pass filter **470** has a cut-off frequency of 50 MHz, thus permitting signals having a frequency greater than the 50 MHz high-pass cut-off to pass transparently between the splitter-combiners **460**, **464**. Signals above this frequency are typically legacy television signals (i.e., 55-850 MHz) and therefore should pass unimpeded through the DPU **14'**. Frequencies lower than the cut-off are thus available for use by the home network signal.

[**0166**] The DPU **14'** is responsible for allowing the RDC OOB and RDC CM signals to pass from the set top boxes and cable modems, respectively, to the head-end of the cable television network **18**. To accomplish this, the DPU **14'** includes a Forward OOB receiver and decoder **490** and a cable modem **474**. The cable modem **474** and Forward OOB receiver **490** receive the data from the OOB Forward Data Channel and decode the signal to acquire information concerning which frequency is to be used as the RDC OOB and RDC CM channels. A controller **492** receives the OOB information, extracts the information on the current frequency bands that are being used in the home, and directs the home network **10** to use other frequency bands. After this frequency information is obtained, the DPU **14'** controls the home network **10** so that no signals are transmitted on this OOB RDC and RDC CM frequency. A notch filter achieves this control, in one embodiment, by blocking passage of signals within the RDC OOB and RDC CM frequency region. In another embodiment, the corresponding tones of the multi-carrier signals are silenced. A regular multi-tone

transmitter (either OFDM or DMT) determines whether to transmit power on each particular tone. Each tone can be silenced according to a management message from the controller **492**. The controller **492** in the DPU **14'** distributes this management message to each of the HNMs **28** identifying the tones that are to be silenced.

[**0167**] When a device **33** in the home needs to transmit data back to the head-end using the OOB RDC or RDC CM channel, the RDC signal is intercepted by the DPU **14'** and transmitted to the cable television network **18**. This is accomplished using an OOB regenerator (receiver/transmitter) **486**. Signals received from the home devices **33** are down-converted and demodulated, then modulated and up-converted to the required transmitted frequency, and then transmitted to the cable television/internet network **18**.

[**0168**] The cable modem (CM) **474** provides Internet access to the home. Other types of access modems are also available if the Internet access is provided on another media than the Cable networks (e.g. a DSL modem can be used if Internet access is provided on the telephone line network). For example, a digital subscriber line (DSL) modem replaces the cable modem **474** if a telephone network is providing Internet access. In such an embodiment, connection between the DPU **14'** and the Internet **18** is not through the splitter-combiner **460**, but instead is through another connector such as a RJ11 connector. An alternative embodiment includes the functionality of the cable modem in a set-top box located in the home (in which case, the cable modem **474** is not part of the DPU **14'**). In yet another embodiment, the cable modem **474** is a standalone device (not in a set top box or in the DPU **14'**. In this case, the cable modem **474** is connected to the backbone **20** through a HNM **28**

[**0169**] In addition, the cable modem **474** is connected to a hub/router **478** for transmitting data to and from the Internet **18**. The hub/router **478** (or bridge) provides hub and routing functionality that distributes the externally generated data signals (Internet) and the home network signal to the HNMs **28** in the home. The hub (or bridge) and routing functionality can be based on an interface such as 100-Base-T Ethernet, IEEE -1394, or USB. The signals from each output port of the hub/router are quadrature amplitude modulated (QAM) to produce QAM signals, with a programmable constellation size, over a pre-defined frequency range. As an example, with a 256-QAM modulation and a symbol rate of up to 40 MHz, the available throughput can reach up to 320 Mbps. A capability to notch filter the signal at programmable frequencies is also provided.

[**0170**] The QAM signal in various embodiments is either a single carrier QAM, or multi-band QAM, which is a summation of several QAM signals with different carrier frequencies. In another embodiment, the signal is modulated as a multi-carrier signal with approximately the same available throughput. The output-modulated signals are combined with the external cable TV signal stream and transmitted over the backbone **20** to the various rooms **30**. A Media Access Controller (MAC) **482**, **482'** (generally **482**), located between the hub/router functionality and the QAM or multi-tone modulators provides the functionality that allows the co-existence of several data sources over the same cable (networking), e.g. arbitration, signal detection, etc.

[**0171**] While the invention has been shown and described with reference to specific preferred embodiments, it should be understood by those skilled in the art that various changes in form and detail may be made therein without departing from the spirit and scope of the invention as defined by the following claims.

What is claimed is:

1. A home network, comprising:

a network backbone;

a plurality of modules connected to the network backbone, each module being connected between the network backbone and a local bus; and

a demarcation point unit receiving a home network signal from one of the modules over the network backbone and passing the home network signal to the plurality of modules.

2. The home network of claim 1 wherein the network backbone includes a plurality of coaxial cables.

3. The home network of claim 2 wherein the coax cables are part of pre-existing cable equipment installed in a home in which the home network resides.

4. The home network of claim 1 wherein the network backbone includes at least one splitter.

5. The home network of claim 1 wherein one module is in communication with a plurality of local buses.

6. The home network of claim 5 wherein one of the local buses is a 1394 local bus and another of the local buses is one of a universal serial bus (USB), Ethernet bus, and a Internet Protocol (IP) bus.

7. The home network of claim 5 wherein at least two of the modules are in communication with 1394 local buses.

8. The home network of claim 5 wherein at least two of the modules are in communication with USB local buses.

9. The home network of claim 5 wherein at least two of the modules are in communication with Ethernet local buses.

10. The home network of claim 1 wherein the demarcation point unit is connected to an external network, the demarcation point unit receiving an external signal from the external network and passing the CaTV and the home network signals together over the network backbone.

11. The home network of claim 10, wherein the external signal is a cable TV (CaTV) signal.

12. The home network of claim 10, wherein the external signal is a satellite signal.

13. The home network of claim 10 further comprising an electronic device connected to the demarcation point unit to receive the external signal.

14. The home network of claim 10, wherein at least one of the modules is integrated into a cable TV device.

15. The home network of claim 14, wherein the cable TV device is a cable modem and the external signal is a cable modem signal.

16. The home network of claim 15, wherein the cable TV device is a set top box.

17. The home network of claim 10 wherein at least one of the modules is integrated into a computer.

18. The home network of claim 11, wherein a frequency of the home network signal is above a frequency of the external signal.

19. The home network of claim 18, wherein the frequency is of the home network signal is higher than approximately 2100 MHz.

20. The home network of claim 18, wherein the frequency is of the home network signal is less than approximately 1050 MHz.

21. The home network of claim 20, wherein the network backbone includes a splitter having an operational range of less than 900 MHz.

22. The home network of claim 1, wherein the demarcation point unit includes a signal reflector unit that receives the home network signal having a first frequency and passes to the plurality of modules the home network signal having a second frequency.

23. The home network of claim 22, wherein the first frequency is the same as the second frequency.

24. The home network of claim 22 wherein the second frequency is different than the first frequency.

25. The home network of claim 1, wherein the network backbone conveys communications between the modules at approximately 100 Mbps.

26. A home network comprising:

a demarcation point unit receiving a signal from a network that is external to the home;

a plurality of modules each connected to the demarcation point unit by one or more coax cables and to a device by a local bus, one of the modules receiving a message from the device connected to that one module by the corresponding local bus and transmitting the message to the demarcation point unit;

wherein the demarcation point unit receives the message from that one module and transmits the message and the signal together to each of the plurality of modules over the coax cables.

27. A demarcation point unit connected between a home network backbone and an external network, the demarcation point unit comprising:

a diplexer receiving a home network signal from the home network backbone and an external signal from the external network, the diplexer separating the home network signal from the external signal; and

a signal reflector unit receiving the home network signal from the diplexer and returning the home network signal back to the home network backbone.

28. The demarcation point unit of claim 27 wherein the signal reflector unit is an output of the diplexer that reflects the home network signal back to the home network backbone.

29. The demarcation point unit of claim 28 wherein the output of the diplexer is shorted to ground.

30. The demarcation point unit of claim 28 wherein the output of the diplexer is unterminated.

31. The demarcation point unit of claim 27 wherein the signal reflector unit includes a given coax cable connected to an output of the diplexer, the given coax cable reflecting the home network signal back to the home network backbone.

32. The demarcation point unit of claim 28 wherein one end of the given coax cable is shorted to ground.

33. The demarcation point unit of claim 25 wherein one end of the given coax cable is unterminated.

34. The demarcation point unit of claim 27 wherein the signal reflector unit includes a delay line in communication with the diplexer.

35. The demarcation point unit of claim 34 wherein one end of the delay line of the signal reflector unit is shorted to ground.

36. The demarcation point unit of claim 34 wherein one end of the delay line of the signal reflector unit is unterminated.

37. The demarcation point unit of claim 27 wherein the signal converter unit includes a RF converter that changes a frequency of the home network signal before the home network signal returns to the home network backbone.

38. The demarcation point unit of claim 37 wherein the home network signal passing to the diplexer from the home network backbone is an upstream signal, the home network signal returning to the home network backbone from the signal reflector unit is a downstream signal, and the diplexer is a first diplexer, and

wherein the signal reflector unit includes a second diplexer having an input/output (I/O) in communication with the first diplexer and an input in communication with the RF converter, the second diplexer separating the upstream signal received by the I/O from the downstream signal received by the input.

39. The demarcation point unit of claim 38 wherein the second diplexer returns the downstream signal to the first diplexer over the I/O.

40. The demarcation point unit of claim 38 further comprising an output in communication with the RF converter, and wherein the second diplexer passes the upstream signal to the RF converter over the output.

41. The demarcation point unit of claim 37 wherein the RF converter includes a RF down-converter in communication with a RF up-converter, the RF down-converter changing the frequency of the upstream signal to an intermediate frequency and the RF up-converter changing the intermediate frequency to the frequency of the downstream signal.

42. The demarcation point unit of claim 38 wherein the frequency of the upstream signal is higher than the frequency of the home network signal.

43. The demarcation point unit of claim 38 wherein a power level of the upstream signal received at the signal reflector unit is constant.

44. The demarcation point unit of claim 38 wherein a power level of the downstream signal leaving the signal reflector unit is constant.

45. The demarcation point unit of claim 38 wherein home network signal passing to the diplexer from the home network backbone is an upstream signal, and the home network signal returning to the diplexer from the signal reflector unit is a downstream signal, and

further comprising a splitter connected between the diplexer and the home network backbone, the splitter receiving the downstream signal from the diplexer and passing the returned downstream signal to the home network backbone over a plurality of coax cables.

46. The demarcation point unit of claim 45 wherein the splitter receives the upstream signal from the home network backbone for transmission to the diplexer.

47. The demarcation point unit of claim 27, wherein the diplexer combines the home network signal received from the signal reflector unit with the external signal received

from the external network and transmits the combined signal to the home network backbone.

48. A network module connected between a network backbone and a local bus, comprising:

a diplexer receiving from the network backbone an analog signal and separating a home network signal from the analog signal;

a modem converting the home network signal to a digital signal;

a media access controller (MAC) controlling communications of the network module with other modules connected to the network backbone; and

a switching fabric interfacing with a protocol of the local bus to deliver the digital signal to the local bus.

49. The home network module of claim 48, further comprising a transmission power controller controlling a power level of the home network signal.

50. In a home network having a plurality of network modules connected to a coax backbone, a method for communicating over the coax backbone between network modules, the method comprising;

transmitting a cycle start burst over the backbone to start a transmission cycle during which the network modules transmit bursts over the backbone;

allocating a first portion of the transmission cycle for the transmission of isochronous bursts by the network modules; and

allocating a second portion the transmission cycle for the transmission of asynchronous bursts by the network modules.

51. The method of claim 50 further comprising establishing a transmission order for the network modules to follow when transmitting isochronous bursts over the backbone.

52. The method of claim 51 wherein the cycle start burst includes the transmission order.

53. The method of claim 50 further comprising establishing a transmission order for the network modules to follow when transmitting asynchronous bursts over the backbone.

54. The method of claim 53 wherein the cycle start burst includes the transmission order.

55. The method of claim 50 further comprising determining that the transmission cycle has ended and allowing transmission of an asynchronous burst to complete after the end of the transmission cycle.

56. The method of claim 50 further comprising determining those network modules that are requesting bandwidth for transmitting isochronous bursts.

57. The method of claim 50 further comprising designating one of the modules to be a master network module, and wherein the master module transmits the cycle start burst.

58. The method of claim 50 further comprising synchronizing the network modules to the cycle start burst.

59. The method of claim 50 further comprising transmitting a registration start burst.

60. The method of claim 50 further comprising allocating bandwidth in the first portion of the transmission cycle to each network module requesting a guaranteed quality of service.

61. The method of claim 50 further comprising monitoring, by a given network module, asynchronous bursts on the backbone to determine when the given network module can transmit an asynchronous burst.

62. The method of claim 50 further comprising receiving, by a given network module, a grant signal over the backbone to indicate that the given network module can transmit an asynchronous burst.

63. The method of claim 50 further comprising monitoring, by a given network module, isochronous bursts on the backbone to determine when that network module can transmit an isochronous burst.

64. The method of claim 50 further comprising transmitting, by a given network module, an empty burst if the given network module has no data to transmit during the second portion of the transmission cycle.

65. The method of claim 50 further comprising transmitting, by a given network module, a self-train burst.

66. In a home network having a plurality of 1394 buses each connected to a network backbone by a network module, the network backbone including a plurality of coax cables, each network module providing a bridge between the network backbone and the 1394 bus connected to that network module, the bridge comprising:

a 1394 Phy layer; and

a 1394.1 link layer routing communications among the plurality of 1394 buses over the coax cables of the network backbone.

67. The bridge of claim 66 wherein the 1394 Phy layer is modified to enable an emulation of the plurality of 1394 buses in the home network as a single 1394 bus.

68. In a home network having a plurality of network modules connected to a network backbone, the network modules communicating with each other over the network backbone using bursts having a plurality of burst types, a burst comprising:

a preamble signifying a start of the burst and the type of the burst;

a header providing at least one parameter for decoding the burst; and

a data portion carrying QAM (quadrature amplitude modulation) symbol data.

69. The burst of claim 68 wherein the preamble includes a periodic preamble portion having a length, the length of the periodic preamble determining the type of the burst.

70. The burst of claim 68 wherein the preamble includes a periodic preamble portion having symbols that periodically alternate in sign, wherein the alternating symbols determine the type of the burst.

* * * * *