Petitioner's Oral Hearing Demonstratives

DISH Network L.L.C., et al. (Petitioner) v. Entropic Communications, LLC (Patent Owner)

Case Nos. IPR2024-00393 and IPR2024-00373
U.S. Patent Nos. 7,295,518 and 7,594,249

Before Hon. Jon M. Jurgovan, Scott B. Howard, and Aaron W. Moore – Administrative Patent Judges

DEMONSTRATIVE EXHIBIT – NOT EVIDENCE

Roadmap

- **Background and State of the Art**

- **’518 Patent**
  - Ground 1 – Kliger-Isaksson
  - Ground 2 – Amit-Jacobsen-Isaksson

- **’249 Patent**
  - Ground 1 – Amit
  - Ground 2 – Amit-ADSL/VDSL
  - Ground 3 – Amit-Jacobsen
  - Ground 4 – Amit-Jacobsen-DSL-Book

State of the Art By May 2001

Broadband Cable TV Access Networks (Ovadia, May 2001)

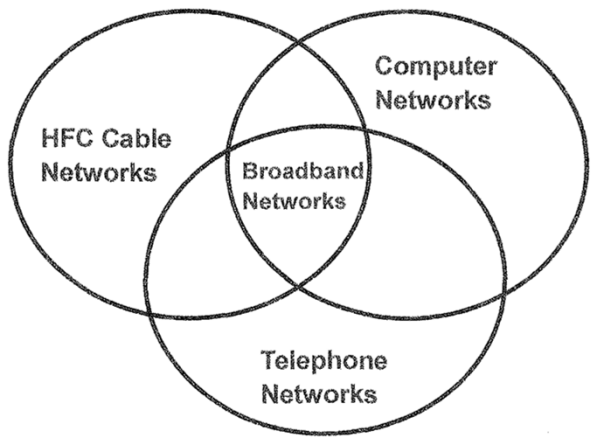

Figure 1.1 The convergence of HFC cable TV networks, computer networks and public-switched telephone networks into the emerging broadband networks carrying video, data, and voice services.

DISH-1034 (Ovadia), 2; Dr. Williams' 2nd Dec. (DISH-1036), ¶17

Amit (2000)

There are several home networking solutions that have already been proposed, including networking over the existing telephone wiring (e.g. HomePNA), networking over the existing power lines, short range wireless networks (Bluetooth), medium range wireless networks (e.g. HomeRF, IEEE802.11), and solutions that require new wiring, such as IEEE1394 (I.LINK) or CAT 5 Ethernet wiring.

Existing Telephone wiring (HomePNA) generally allows ordinary voice telephone calls to be carried over the wire, while at the same time providing up to several megabits of data throughput.

TV wiring that consist of coaxial cables are used to connect the antenna/cable TV output, typically via passive splitters, to the cable outlets at specific points in the home. Typical home TV wiring scenarios are depicted in FIG. **1**.

The signals transmitted over the in-home coaxial TV wiring may include regular video channels, data channels for fast Internet access (using e.g., DOCSIS cable modem), voice channels for telephony over cable, pay-per-view, control signals and more.

DISH-1014 (Amit), 1:30-40, 2:4-13; Dr. Williams' 2nd Dec., ¶18

State of the Art By May 2001

Twisted pair and coax were used in the same network.
Dr. Williams assembled such a network in his own home.

Amit

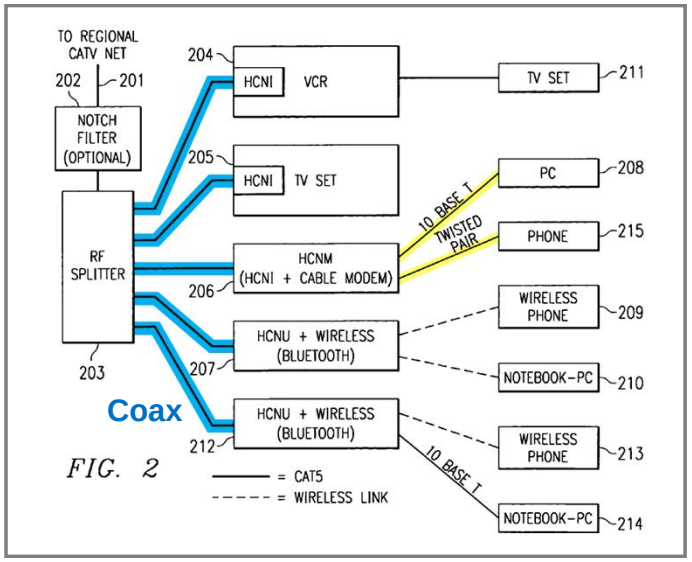

DISH-1014, FIG. 2; Pet., 73

Dr. Williams' 1st Transcript

Q. What other options existed?

A. Well, you could rewire -- well, you could use the existing power lines, which he points to as an alternative. You could use the telephone lines, which you could -- which is an alternative. Or you could use WiFi or you could run your own cat 5 in-house plant, either over twisted pair wire or over cable. And, in fact, 2000 -- in fact, I did that in my house in 2000.

Q. When you say that, did you run your own cat 5?

A. Yes.

Q. Over twisted pair or over cable?

A. I used both.

Dr. Williams' 1st Transc. (Ex. 2003), 43:11-22; Dr. Williams' 2nd Dec., ¶19

*As explained in the Petition, Amit makes clear that the cables on the left are coax. Pet., 42.

State of the Art By May 2001

***Multi-carrier modulation* and *bit-loading* were being adopted in communication networks**

Emami (1996)

BACKGROUND

Multicarrier modulation has been gaining popularity over single carrier modulation for the transmission of wireless digital signals in a radio communication system. Multicarrier modulation offers increase flexibility over a single carrier modulation by providing opportunities to optimize transmission bandwidth. In a multicarrier modulation

DISH-1018 (Emami), 1:12-17; Dr. Williams' 1st Dec. (DISH-1004), ¶195

Broadband Cable TV Access Networks (Ovadia, May 2001)

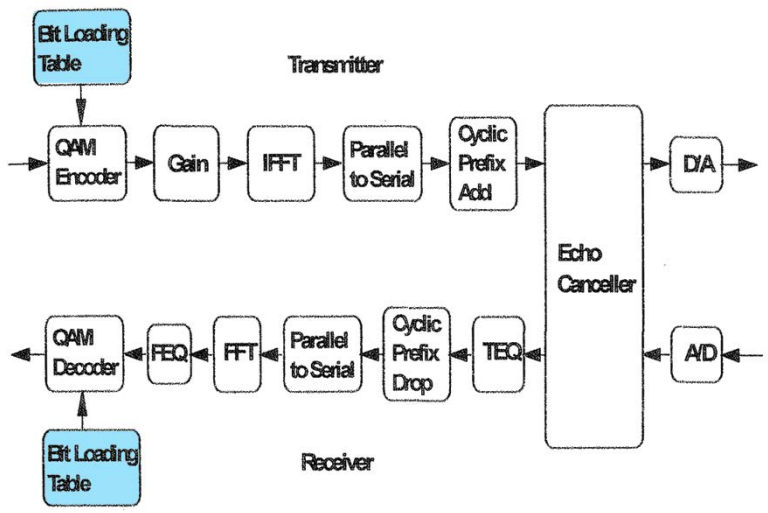

Figure 1.5 Basic block diagram of ADSL modem.

DISH-1034, 13; Dr. Williams' 2nd Dec., ¶29

’518 Patent: Table of Contents

Topic	Slide
’518 Patent Overview	7
Isaksson is Analogous Art	14
A POSITA Would Have Combined Amit and Jacobsen (Ground 2)	29
A POSITA Would Have Combined Amit-Jacobsen with Isaksson (Ground 2)	39
A POSITA Would Have Combined Kliger with Isaksson (Ground 1)	44
Jacobsen is Prior Art	49
POSITA Standard	54

The ’518 Patent

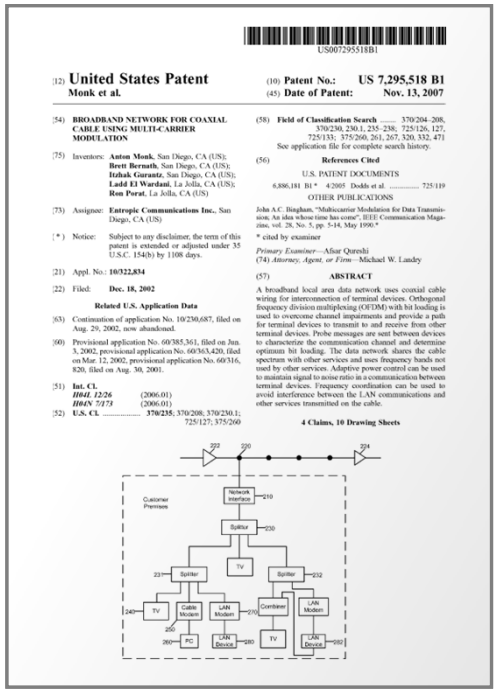

US007295518B1

(12) **United States Patent**
Monk et al.

(10) **Patent No.: US 7,295,518 B1**
(45) **Date of Patent: Nov. 13, 2007**

(54) **BROADBAND NETWORK FOR COAXIAL CABLE USING MULTI-CARRIER MODULATION**

(75) Inventors: **Anton Monk**, San Diego, CA (US); **Brett Bernath**, San Diego, CA (US); **Itzhak Gurantz**, San Diego, CA (US); **Ladd El Wardani**, La Jolla, CA (US); **Ron Porat**, La Jolla, CA (US)

(73) Assignee: **Entropic Communications Inc.**, San Diego, CA (US)

(*) Notice: Subject to any disclaimer, the term of this patent is extended or adjusted under 35 U.S.C. 154(b) by 1108 days.

(21) Appl. No.: **10/322,834**

(22) Filed: **Dec. 18, 2002**

Related U.S. Application Data

(63) Continuation of application No. 10/230,687, filed on Aug. 29, 2002, now abandoned.

(60) Provisional application No. 60/385,361, filed on Jun. 3, 2002, provisional application No. 60/363,420, filed on Mar. 12, 2002, provisional application No. 60/316,820, filed on Aug. 30, 2001.

(51) **Int. Cl.**
H04L 12/26 (2006.01)
H04N 7/173 (2006.01)

(52) **U.S. Cl.** **370/215**; 370/208; 370/230.1; 725/127; 375/260

(58) **Field of Classification Search** 370/204–208, 370/230, 230.1, 235–238; 725/126, 127, 725/133; 375/260, 261, 267, 320, 332, 471
See application file for complete search history.

(56) **References Cited**

U.S. PATENT DOCUMENTS

6,886,181 B1 * 4/2005 Dodds et al. 725/119

OTHER PUBLICATIONS

John A.C. Bingham, “Multicarrier Modulation for Data Transmission, An idea whose time has come”, IEEE Communication Magazine, vol. 28, No. 5, pp. 5-14, May 1990.*

* cited by examiner

Primary Examiner—Afsar Qureshi
(74) *Attorney, Agent, or Firm*—Michael W. Landry

(57) **ABSTRACT**

A broadband local area data network uses coaxial cable wiring for interconnection of terminal devices. Orthogonal frequency division multiplexing (OFDM) with bit loading is used to overcome channel impairments and provide a path for terminal devices to transmit to and receive from other terminal devices. Probe messages are sent between devices to characterize the communication channel and determine optimum bit loading. The data network shares the cable spectrum with other services and uses frequency bands not used by other services. Adaptive power control can be used to maintain signal to noise ratio in a communication between terminal devices. Frequency coordination can be used to avoid interference between the LAN communications and other services transmitted on the cable.

4 Claims, 10 Drawing Sheets

DISH-1001 (’518 Patent), Cover

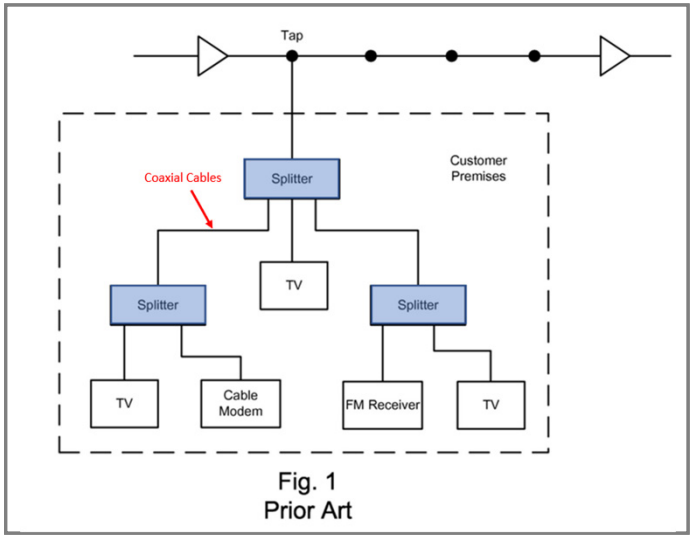

Fig. 1
Prior Art

DISH-1001, Fig. 1

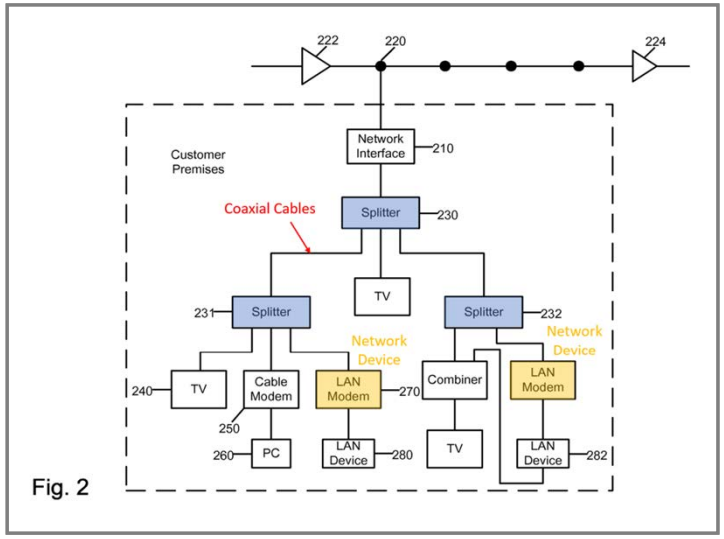

Fig. 2

DISH-1001, Fig. 2

IPR Asserted Grounds

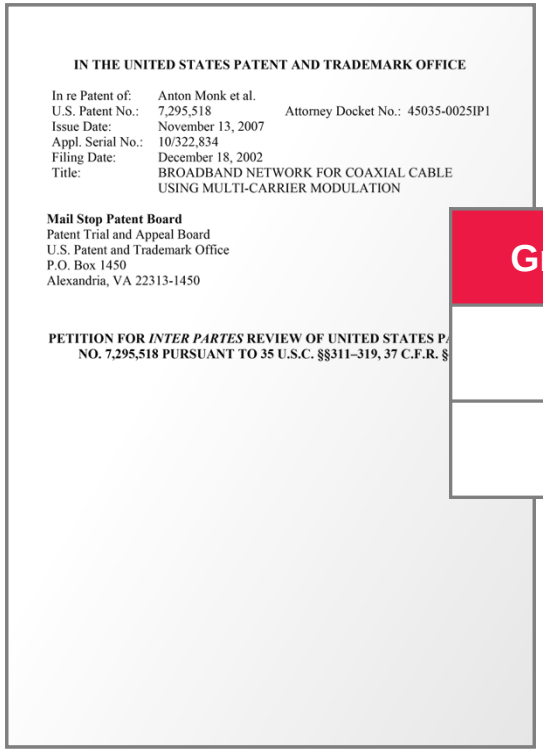

IN THE UNITED STATES PATENT AND TRADEMARK OFFICE

In re Patent of: Anton Monk et al.
U.S. Patent No.: 7,295,518 Attorney Docket No.: 45035-0025IP1
Issue Date: November 13, 2007
Appl. Serial No.: 10/322,834
Filing Date: December 18, 2002
Title: BROADBAND NETWORK FOR COAXIAL CABLE USING MULTI-CARRIER MODULATION

Mail Stop Patent Board
Patent Trial and Appeal Board
U.S. Patent and Trademark Office
P.O. Box 1450
Alexandria, VA 22313-1450

PETITION FOR *INTER PARTES* REVIEW OF UNITED STATES P
NO. 7,295,518 PURSUANT TO 35 U.S.C. §§311–319, 37 C.F.R. §

Ground	Patent Claims	§103 Basis
1	1, 3	Kliger in view of Isaksson
2	1, 3	Amit in view of Jacobsen and Isaksson

Petition (Pet.), 3

The ’518 Patent Is Not Entitled to Its Priority Date

Patent Owner does not dispute that the ’518 Patent is not entitled to its earliest priority date of 2001-08-30

Petition

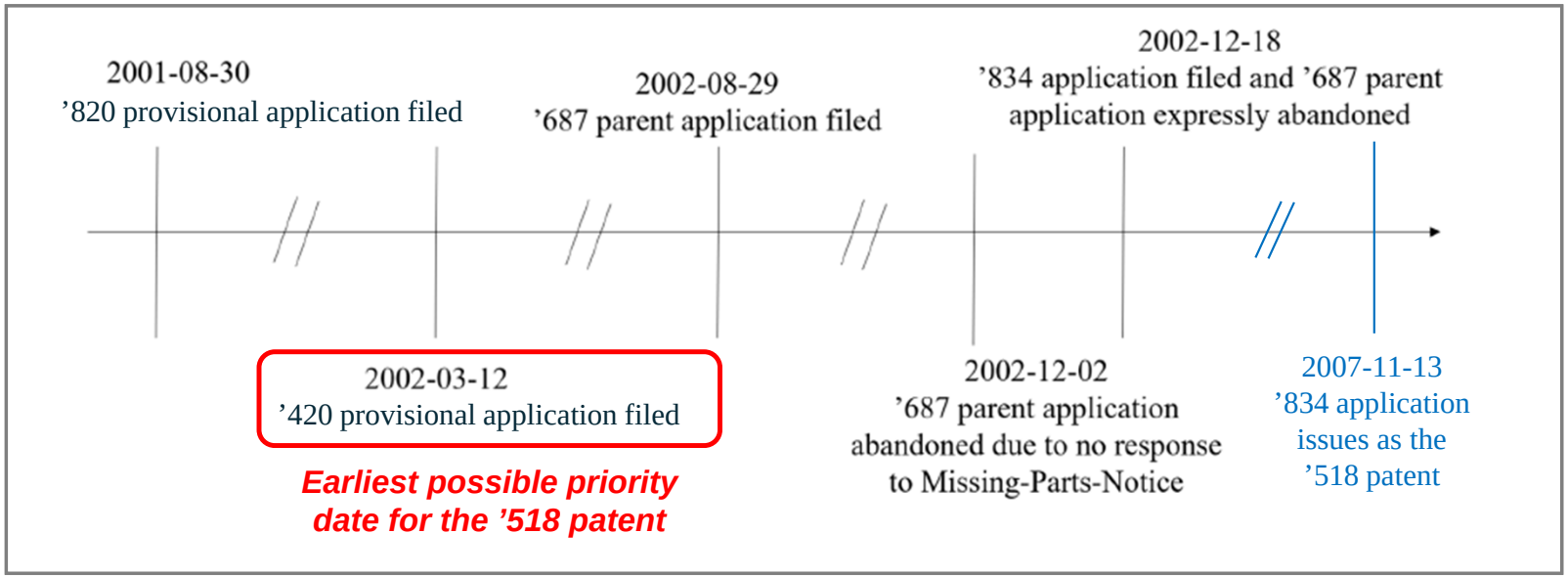

Pet., 11 (annotated)

Kliger Is Entitled to Its Priority Dates

Patent Owner does not dispute that Kliger—filed 2001-08-30—is entitled to its priority dates

Petition

Provisional	Filed
’263-Provisional (DISH-1008)	2000-08-30
’110-Provisional (DISH-1009)	2000-09-05
’060-Provisional (DISH-1010)	2001-03-12
’130-Provisional (DISH-1011)	2001-05-15
’304-Provisional (DISH-1012)	2001-06-11

Pet., 14

’518 Claim 1 – No Disputed Limitations

’518 Patent: Claim 1

1. A data communication network comprising:

at least two network devices, each network device comprising a multi-carrier modulator for modulating data, an up converter for translating the modulated data to an RF carrier frequency, a down converter for translating an RF signal, and a multi-carrier demodulator for demodulating the translated RF signal to produce data; and

cable wiring comprising a splitter with a common port and a plurality of tap ports, and a plurality of segments of coaxial cable connecting between the splitter tap ports and the network devices;

whereby network devices communicate with each other through the cable wiring using multi-carrier signaling;

wherein network devices transmit probe messages through the cable wiring and analyze received probe message signals to determine channel characteristics and bit loading is selected based on the determined channel characteristics.

DISH-1001, 12:8-26

Petition

	Claimed Concept	Applicant’s Admission
	Multi-carrier modulation	DISH-1001, 3:56-4:18, 9:29-32
	Bit-loading	DISH-1001, 8:9-26
	RF-conversion circuitry	DISH-1001, 4:8-19
	Probe messaging for channel characterization	DISH-1001, 10:21-28

Pet., 7-8

PO’s arguments require features not in the claims: Claim 1 is not limited to a “local” network

Petitioner Reply (Pet. Reply), 1-2

What Are the Disputes?

- **Analogous Art:** Is Isaksson—a multi-carrier wired reference that encompasses coax and addresses signal impairments—analogous to the ’518 patent?
- **Motivation to Combine:** Would a POSITA be motivated to combine Isaksson with other similar wired networking references to improve them?
- **Combination:** How would a POSITA combine Isaksson with the other wired networking references to achieve the articulated improvements?

Claim 1: Well-known Techniques

The District Court's § 101 order agrees that the claimed techniques were known in the art and were used in other wired networking contexts for the same purpose

District Court's § 101 Order

> Entropic acknowledges that the hardware-based limitations are conventional.[90] In fact, Entropic argues that the claim discloses a technological upgrade because it improves cable network operation "without requiring any new hardware or re-wiring."[91]

Ex. 2008, 23; Petitioner's Reply to Patent Owner's Opposition to Petitioner's Motion to Exclude, 2

> As disclosed, bit loading appears to refer to specific techniques known in the art, which provide an improvement in the coaxial network context. For those reasons, the Court determines that Claim 1 is directed to an improvement instead of an abstract idea. Based upon the disclosures, it potentially appears that the applicant did not invent that improvement.

Ex. 2008, 24-25; Petitioner's Reply to Patent Owner's Opposition to Petitioner's Motion to Exclude, 2

ISSUE

1

Isaksson Is Analogous Art

1 Isaksson Is Analogous Under Both Tests

dish

Petitioner's Reply

Two tests define the scope of analogous prior art: (1) whether the art is from the same field of endeavor, regardless of the problem addressed and, (2) if the reference is not within the field of endeavor, whether the reference still is reasonably pertinent to the particular problem with which the inventor is involved. *Netflix, Inc. v. DivX, LLC*, 80 F.4th 1352, 1358 (Fed. Cir. 2023) (citing *Airbus S.A.S. v. Firepass Corp.*, 941 F.3d 1374, 1379 (Fed. Cir. 2019)). Isaksson is analogous under both tests. *See* Petition, 27, 54.

Pet. Reply, 3-4

Petition

Additionally, a POSITA would have understood that Kliger and Isaksson are analogous art to the '518 patent because they are from the same field of endeavor as the patent—wired networking systems—and because they are reasonably pertinent to the problem at issue in the patent—overcoming wired-network signal impairments. DISH-1004, ¶¶76-80.

Pet., 27

1 FOE Test: Isaksson Is in the Same Field of Endeavor

Petitioner's Field	"wired networking systems" Pet., 27
PO's Impermissibly Narrow Field	"'wired networking systems using coaxial cables' in a local network context" PO Response (POR), 22
PO's Impermissibly Narrow Field (changes later)	"wired networking systems using coaxial cables and the splitters and their tap ports" Patent Owner Sur-Reply (PO Sur-Reply), 22

Petitioner's Reply

> POR, 22. This is wrong because the Federal Circuit has held that the field of endeavor is "not limited to the specific point of novelty, the narrowest possible conception of the field, or the particular focus within a given field." *Netflix*, 80 F.4th at 1359 (citing *Unwired Planet, LLC v. Google Inc.*, 841 F.3d 995, 1001 (Fed. Cir. 2016)). Instead, the field of endeavor relies on all embodiments in a patent's

Pet. Reply, 7-8

'518 Patent

> TECHNICAL FIELD
>
> This invention relates to broadband communication networks and specifically to communications using coaxial cable building wiring.

DISH-1001,1:25-29; Dr. Williams' 1st Transc., 77:5-7

> Broadband networks are described in U.S. Pat. No. 5,889,765 "Bi-directional communications Network" issued to Gibbs, U.S. Pat. Nos. 5,940,387 and 6,005,861 "Home Multimedia Network Architecture" issued to Humpleman, U.S. Pat. No. 5,870,513 "Bi-directional Cable Network with a Mixing Tap or Suppressing Undesirable Noise in Signals From a Remote End of the Network" issued to Williams,

DISH-1001, 3:25-31; Dr. Williams' 1st Transc., 77:11

1 FOE Test: Patent Owner's Proposed Field Excludes Cited Art

The '518 Patent cites to and incorporates by reference several twisted pair references

Gibbs discloses a broadband network overlaid with the cable service frequencies using dynamically allocated TDMA protocols. Humpleman patents disclose a home network using an active network interface unit to couple the home network to the external network. Williams discloses a method of reducing noise accumulated in the frequency bands used by an upstream signal. Naboulsi discloses an active network interface for an asynchronous transfer mode (ATM) network. Rubinstain discloses a method of transporting Ethernet over twisted pair lines. Gorman discloses an active reverse path multiplexer for communication between the cable head-end and subscriber cable modems. Langlais discloses a two-way data transmission system for communicating between an upstream and downstream unit using OFDM.

DISH-1001, 3:41-55; Dr. Williams' 1st Transc., 77:11

use lower order constellations such as QPSK. U.S. Pat. No. 6,438,174 "Multi-carrier transmission systems" incorporated herein by reference, discloses discrete multi-tone modulation and a technique for bit loading applied to point-to-point twisted pair wiring. U.S. Pat. No. 6,259,746

DISH-1001, 8:19-23; Pet., 7

for such communication. U.S. Pat. No. 5,959,967 "Digital transmission system", incorporated herein by reference, issued to Humphrey discloses an OFDM transmission system used to communicate over a twisted pair loop. U.S. Pat.

DISH-1001, 3:67-4:3; Pet., 7

1 FOE Test: Isaksson Is Analogous Under Either Field

Isaksson is not limited to twisted pair

The present invention relates to the synchronous updating of bit-loading factors in multi-carrier transmission systems. The precise manner in which this is achieved will, therefore, now be considered in greater detail. It should be emphasised that the present invention can be used not only with the MUSIC system as herein described, but with other multi-carrier systems employing dynamic bit-loading.

DISH-1013 (Isaksson), 72:5-8; Pet., 27, 55

Improvements in, or Relating to, Multi-carrier Transmission Systems

The present invention relates to multi-carrier transmission systems, particularly to multi-carrier transmission systems having the facility to dynamically change carrier bit-loading and a method of synchronising the updating of parameters relating to bit-loading.

DISH-1013, 1:1-7; Dr. Williams' 2nd Dec., ¶38

CLAIMS

1. A multi-carrier transmission system having a first and a second transceiver, each of said transceivers having a receiver and a transmitter, wherein data is transmitted between said transceivers by modulating said data onto a multiplicity of carrier waves in the form of multi-bit symbols, wherein each carrier wave constitutes a channel, and wherein the number of bits per symbol,

DISH-1013, 89:1-7; Dr. Williams' 2nd Dec., ¶38

1 FOE Test: Isaksson Is Analogous Under Either Field

dish

Isaksson expressly references coax cable systems

Isaksson

Said multi-carrier transmission system may be a DMT based ADSL system.

DISH-1013, 6:13-14; Pet. Reply, 8

Early versions of VDSL will use frequency division multiplexing to separate downstream from upstream channels and both of them from POTS and ISDN. Echo cancellation may be required for later generation systems featuring symmetric data rates. A rather substantial distance, in frequency, will be maintained between the lowest data channel and POTS to enable very simple and cost effective POTS splitters. Normal practice would locate the downstream channel above the upstream channel. However, the DAVIC specification reverses this order to enable premises distribution of VDSL signals over coaxial cable systems.

DISH-1013, 3:4-15; Pet., 27

Dr. Williams' 2nd Dec.

81. Finally, Mr. Garrett disagrees with my interpretation of Isaksson's statement that the DAVIC specification enables premises distribution of VDSL signals over coaxial cables. Garrett Decl., ¶114. To be clear, I interpret the statement as follows: the statement indicates to a POSITA that Isaksson's solution can be extended to coaxial cables, e.g., in a VDSL system implemented on coaxial cables as specified by the DAVIC specification. Mr. Garrett's unsupported arguments about

Dr. Williams' 2nd Dec., ¶81

1 FOE Test: PO's Expert Fails to Prove Otherwise

dish

Mr. Garrett's opinion should be *afforded little to no weight*

Mr. Garrett disputes Isaksson's and Dr. Williams' conclusions

shared medium for signal distribution. Further, even in the case of terrestrial distribution of coax, the DAVIC standard itself asserts that additional innovation is required on the shared medium of coaxial, making VDSL inadmissible in its existing form on coaxial cable, whether it is within the building or outside of the building. Accordingly, a POSITA would not view Isaksson's features as extending to coaxial cables within the home.

Ex. 2002, ¶114; Pet. Reply, 20

But he is not familiar with DSL…

Q. Apologies for my ignorance here, but is there any distinction between just generic DSL and HDSL?

A. I just couldn't speak to the specifics.

DISH-1039, 19:3-6; Pet. Reply, 20

…and relies on unidentified Internet sources

Q. Do you know the basis that you had for that sentence?

A. If I remember correctly, I did an internet search for DAVIC as a result of the reference to DAVIC. I don't recall the exact location of this information, but that's how I landed on this statement.

DISH-1039, 109:16-22; Pet. Reply, 20

1 RP Test: Isaksson is Reasonably Pertinent to the Problem

dish

Petitioner's Reply

> ***First***, the Federal Circuit has held that the problem being examined must not be defined so narrowly as to collapse the field of endeavor and "reasonable-pertinence" inquiries. *Donner Tech., LLC v. Pro Stage Gear, LLC*, 979 F.3d 1353, 1360 (Fed. Cir. 2020). Here, the PO collapses the '518 Patent's known

Pet. Reply, 10

Petitioner's RP: Defines the Problem	PO's RP: Narrow Definition That Contradicts *Donner*	PO's FOE: Narrow Definition from Sur-Reply
"wired-network signal impairments" Pet., 27	"impairments specific to on-premises communications between network devices over existing coaxial cable wiring" PO Sur-Reply, 17 "*Isaksson* is not reasonably pertinent to addressing on-premises impairments between tap ports [of a splitter] …." PO Sur-Reply, 18	"wired networking systems using coaxial cables and the splitters and their tap ports" PO Sur-Reply, 22

1 RP Test: Isaksson is Reasonably Pertinent to the Problem

dish

Donner

2019 WL 4020204, at *9–10. But a reference can be analogous art with respect to a patent even if there are significant differences between the two references. *See, e.g.*, *ICON*, 496 F.3d at 1380 (concluding that "[a]nalogous art to Icon's application," which related to "a treadmill with a folding mechanism and a means for retaining that mechanism in the folded position," included "any area describing hinges, springs, latches, counterweights, or other similar mechanisms—such as the folding bed in" the prior art). Indeed, there will frequently be significant differences between a patent and a reference from a different field of endeavor. But it does not follow that such a reference is, for that reason alone, not reasonably pertinent to one or more problems to which the claimed invention relates. Importantly, the Board did not attempt to explain how the differences it mentioned establish that the references were not directed to solving a similar problem.

Donner, 979 F.3d at 1361; Pet. Reply, 10

1 PO Argues Immaterial Differences Between Coax & Twisted Pair

The same problems occur in twisted pair and coax

DSL Textbook

consists of many cable sections of sizes from 19 gauge to 26 gauge. Due to the installation practice, there are bridged taps associated with telephone subscriber loops. To compensate for the effect of magnitude and phase distortion for the broad DSL signaling band and reflections caused by bridged taps and terminal impedance mismatch, some inter-symbol interference counter measures, such as adaptive channel equalization and multi-carrier modulation, become necessary.

DISH-1031 (DSL Textbook), 7; Dr. Williams' 2nd Dec., ¶59

1 PO Argues Immaterial Differences Between Coax & Twisted Pair

dish

The experts agree that the same problems occur in twisted pair and coax

Mr. Garrett (PO Expert)

Q. In a wired communication can a reflection occur if there is no impedance mismatch?

A. No.

Q. So a necessary condition for a reflection in a wired communication is an impedance mismatch?

A. **I believe that to be the case.**

DISH-1039, 31:6-9

Dr. Williams (Petitioner Expert)

> interfere significantly with a large number of adjacent symbols." *Id.* Simply put, impedance mismatches cause reflections, which in turn cause ISI. Jacobsen also

Dr. Williams' 1st Dec., ¶166

> 24. As I explained in my deposition, reflections occur when there are impedance mismatches within a medium or at its connection points. Williams Transc., 34:2-39:8. This phenomenon is common across wired mediums like coaxial cables, twisted pair, and optical fiber, as any discontinuity can cause part of the signal to reflect back toward the source. These reflections disrupt the integrity of the

Dr. Williams' 2nd Dec., ¶24

1 RP Test: The ’518 Patent Cites to Another Isaksson Patent

In its Description, the ’518 Patent <u>cites to</u> and <u>incorporates by reference</u> the ’174 patent, which names Isaksson as an inventor and discloses bit-loading/multi-carrier on twisted pair

Bit loading is a method of allocating a higher order signal constellation to carriers that have higher signal to noise ratio and a lower order constellation to carriers that have lower signal to noise ratio. Higher SNR channels can support higher data capacity. Frequency bins occupying parts of the channel where the SNR is high can be used to transmit more bits. Each carrier may be modulated with a different order constellation, where higher SNR frequencies can bear a higher order constellation, and the resulting closer spacing of the constellation points. Frequencies with the lower SNR use lower order constellations such as QPSK. U.S. Pat. No. 6,438,174 “Multi-carrier transmission systems” incorporated herein by reference, discloses discrete multi-tone modulation and a technique for bit loading applied to point-to-point twisted pair wiring. U.S. Pat. No. 6,259,746 “Method for allocating data and power in a discrete multi-tone communication system” discloses a technique for bit loading applied to discrete multi-tone modulation.

DISH-1001, 8:9-26; Pet., 7

- **Patent Owner argued in its POPR that the ’174 patent is cumulative of Isaksson**

Patent Owner Preliminary Response, 20-22,

1 RP Test: SAME Signal Impairments Occur in Twisted Pair Networks

dish

’518 Patent

Imperfect terminations at connections create micro reflections within the cable wiring. The dominant main signal and reflected signal combine in the channel. A reflection anywhere in the wiring produces a multipath signal in some or all wiring branches that creates inter-symbol interference (ISI). The multipath signal has a delay and amplitude difference relative to the main signal. In the frequency domain, a reflection produces ripples in the response of the channel, creating amplitude variations across the pass band. In the time domain, ISI is seen as an impairment to the shape of the digital signal pulses. ISI will degrade the bit error rate (BER) performance of the communication channel. To over-

DISH-1001, 3:5-16; Dr. Williams’ 1st Dec., ¶31

bols. Hence, OFDM provides a mechanism to overcome the frequency selective channel impairments present in coaxial building wiring.

DISH-1001, 8:1-3; Pet., 7

interference to the other services using the cable. Selective avoidance of specific carrier frequencies avoids interference from the other services to the network signal.

DISH-1001, 4:65-67

1 RP Test: SAME Signal Impairments Occur in Twisted Pair Networks

dish

Isaksson

Figure 17. The insertion of a cyclic prefix avoids inter-symbol interference (ISI) and preserves the orthogonality between the tones, resulting in a simple input-output relation which makes it possible to view each carrier as a separate channel. This cyclic prefix

DISH-1013, 48:4-8; Dr. Williams' 1st Dec., ¶80

A multi-carrier modulation technique, such as DMT, handles frequency dependent loss and noise in twisted pair-cables in an efficient manner. In the MUSIC

* * *

1024 carriers each of which is 9.77 kHz wide. The allocated transmission power for the individual carriers depends on the noise power and the transmission loss in each band. Every carrier carries multilevel pulses that

DISH-1013, 26:4-13; Pet., 24

Mr. Garrett (PO Expert)

Q. Let's take each in part. So in a wired system what problem could be caused by a reflection?

A. A problem that could be caused is intersymbol interference.

DISH-1039, 31:19-22

'518 Patent

Imperfect terminations at connections create micro reflections within the cable wiring. The dominant main signal and reflected signal combine in the channel. A reflection anywhere in the wiring produces a multipath signal in some or all wiring branches that creates inter-symbol interference (ISI). The multipath signal has a delay and amplitude difference relative to the main signal. In the frequency domain, a reflection produces ripples in the response of the channel, creating amplitude variations across the pass band. In the time domain, ISI is seen as an impairment to the shape of the digital signal pulses. ISI will degrade the bit error rate (BER) performance of the communication channel. To over-

DISH-1001, 3:5-16; Dr. Williams' 1st Dec., ¶31

bols. Hence, OFDM provides a mechanism to overcome the frequency selective channel impairments present in coaxial building wiring.

DISH-1001, 8:1-3; Pet., 7

interference to the other services using the cable. Selective avoidance of specific carrier frequencies avoids interference from the other services to the network signal.

DISH-1001, 4:65-67

1 RP Test: SAME Problems in Isaksson Occur in CATV Networks

Ovadia

Finally, the electronic impairments in cable TV networks can be divided as follows:

- Additive white Gaussian noise (AWGN)
- Multipath electrical echoes and group delay
- In-band QAM amplitude variations
- Phase noise
- Burst and impulse noise
- AM hum modulation

DISH-1034, 262; Dr. Williams' 2nd Dec., ¶54

Jacobsen

A second source of signal degradation in CATV networks is interference from other signals. For example, leaks in a CATV network caused by poorly shielded consumer devices or system hardware allow amateur radio (ham) signals to enter the CATV system. Be-

DISH-1016 (Jacobsen), 306; Dr. Williams' 1st Dec., ¶166

Jacobsen

The transmission of digital signals over the CATV network is complicated by two general effects. First, the hardware in CATV networks is not ideal. Taps, amplifiers, and splitters can all cause signals to be reflected at their insertion points. In particular, splitters in subscriber homes are known to have poor isolation characteristics. The effect of reflected signals on the frequency transfer characteristic of a CATV channel is passband ripple, which is known to cause "ghosting" in received analog signals. The effects of rippling on digital signals, however, are more severe. Variations in a channel's frequency response cause successively transmitted symbols to interfere with one another, an effect known as intersymbol interference (ISI). Depending on

DISH-1016, 305; Pet., 45

ISSUE

2

A POSITA Would Have Combined Amit and Jacobsen (Ground 2)

2 Amit: A Data Communication Network Over Coax

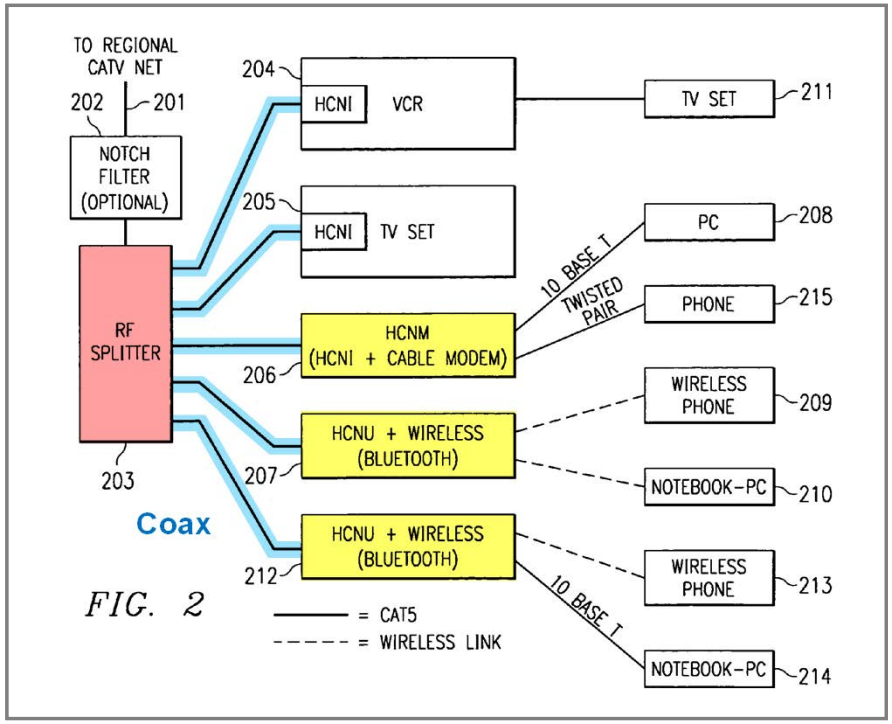

FIG. 2

DISH-1014, FIG. 2; Pet., 73

A summary of some of the key principles of the disclosed system and methods are noted below.

1. Subscribers' devices may communicate directly (not via the headend) using RF signaling over the coax cable. These signals will typically propagate between the devices via reflections from other devices in the line, e.g. splitters or amplifiers in the line.

DISH-1014, 3:17-24; Pet., 44, 57

*As explained in the Petition, Amit makes clear that the cables on the left are coax. Pet., 42.

2 Amit Identifies Signal Impairments in its Network

Additionally: a POSITA would have understood that there are signal impairments in Amit's network…

Petitioner Reply

PO's focus on Amit's reflections suggests an obviousness combination must demonstrate a known problem existed in the prior art. The Federal Circuit has explicitly rejected this rigid approach. In *Intel Corp. v. PACT XPP Schweiz AG*, 61 F.4th 1373, 1380 (Fed. Cir. 2023) ("*Intel II*"), the court emphasized that "universal" motivations known in a particular field provide sufficient motivation to combine, even without explicit suggestion in any reference. The Institution Decision (ID, Paper 7) follows this precedent, noting that PO's argument does not negate Petitioner's demonstration that a POSITA would have recognized the benefits of incorporating Jacobsen's multi-carrier into Amit's system. ID, 17.

Pet. Reply, 13

Dr. Williams' 1st Dec.

165. In the Amit-Jacobsen combination, a POSITA seeking to implement Amit's coaxial HomeCN would have understood that there can be "houses where there is a problem with reflection" (DISH-1014, 20:42-43) even though "coax cable is an excellent communication medium" (*id.*, 2:51-53). Indeed, Amit identifies "[t]he

Dr. Williams' 1st Dec., ¶165

designing the HomeCN components." *Id.*, 13:54-14:1. Moreover, Amit recognizes that the "channel conditions" in a network can vary and necessitate the network implementing different communication techniques based on those conditions. *Id.*, 8:30-32.

Dr. Williams' 1st Dec., ¶165

2 Jacobsen Addresses Impairments on Coax

dish

PROBLEM

The feasibility of offering high-speed interactive data services to customers on CATV networks or similar broadband coaxial networks is currently being investigated by a number of service providers. With over 92% of the homes in the United States passed by cable, the CATV network is a potential supplier of these interactive data services. However, there are several electrical transmission problems that must be overcome before these services can be supplied reliably over CATV networks.

DISH-1016, 305; Pet., 44-45

PROBLEMS ADDRESSED

- Reflections (ISI)
- Distortions
- Channel degradations
- Computation efficiency

DISH-1016, 305-306; Dr. Williams' 1st Dec., ¶¶166-167

EVALUATED TECHNIQUES

In the next section, we discuss two candidate techniques for multimedia transmission on the CATV network: single-carrier quadrature amplitude modulation (QAM) with equalization and multicarrier modulation. Subsequently, we present a simulated channel,

DISH-1016, 306; Pet., 45, 48, 68

SOLUTION

The results of our simulations indicate that discrete multitone modulation is more computationally efficient than single-carrier modulation with equalization for the transmission of digital data over CATV channels with rippled passbands. Furthermore, DMT can easily adapt to a variety of channel degradations, optimizing the system bit rate for a given channel and complexity. Because system reliability is important for any consumer service, a digital transmission system must maintain a certain level of performance under a wide variety of circumstances. Given our simulation results, multicarrier modulation appears to be better equipped than single-carrier modulation to accomplish this objective.

DISH-1016, 312; Pet., 45, 47-48, 69

2 Jacobsen Discloses Bit Loading and Multi-Carrier Modulation

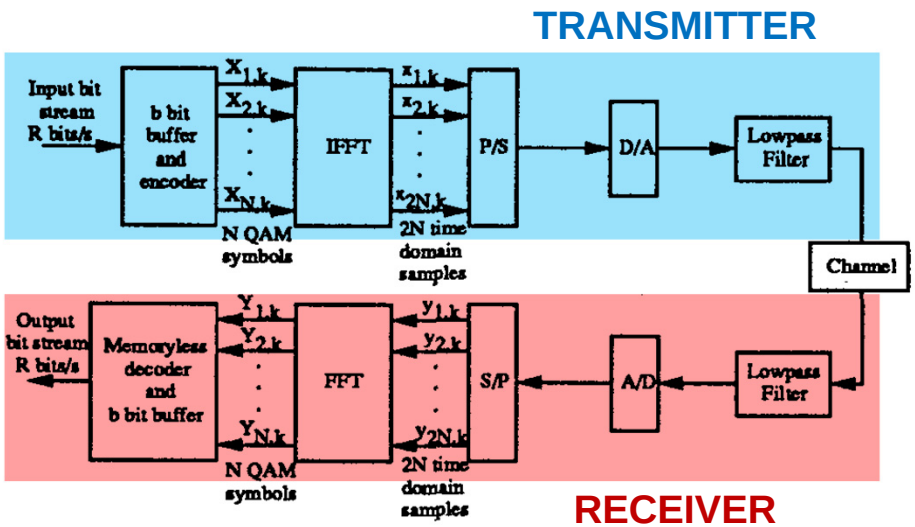

Figure 1: DMT block diagram

DISH-1016, 307; Pet., 46

to be equal for all subchannels. Instead, bits are originally assigned to subchannels just after training during system initialization in direct proportion to the subchannel signal-to-noise ratios. As a result, subchannels that suffer from little attenuation and/or little noise carry the most bits, while subchannels that are severely attenuated and/or very noisy might not carry any bits. This property can be used to alleviate the

DISH-1016, 307; Pet., 50-51

2 Amit-Jacobsen: Jacobsen's Techniques Improve Amit

dish

Jacobsen addresses signal impairments, including but not limited to reflections, in coaxial networks

Dr. Williams' 1st Dec.

163. As I explain below, the Amit-Jacobsen combination improves Amit's coaxial HomeCN by incorporating Jacobsen's techniques for multi-carrier signaling on coaxial cables into Amit's HCN devices. Jacobsen's multi-carrier signaling provides several improvements. First, Jacobsen's multi-carrier signaling is more computationally efficient over coaxial cables than Amit's single-carrier modulation. Second, Jacobsen's multi-carrier signaling also reduces the effects of distortions, e.g., reflections, and other potential signal impairments on coaxial cables. Jacobsen2 explains these benefits of multi-carrier signaling:

Dr. Williams' 1st Dec., ¶163

Jacobsen

and multicarrier systems on this channel. Our results indicate that for a fixed system throughput, the computational complexity of the multicarrier system is significantly less than that of the single-carrier system. Next, we simulate a ham interfering signal and investigate its effect on the achievable data rates and system complexities. Simulations show that a slightly more complex multicarrier system achieves bit rates and data rates only slightly lower than those achievable on the "clean" channel. In contrast, the single-carrier system requires an enormous increase in complexity to achieve a data throughput comparable to the multicarrier system's.

DISH-1016, 306; Pet., 48

Ovadia

Finally, the electronic impairments in cable TV networks can be divided as follows:

- Additive white Gaussian noise (AWGN)
- Multipath electrical echoes and group delay
- In-band QAM amplitude variations
- Phase noise
- Burst and impulse noise
- AM hum modulation

DISH-1034, 262; Dr. Williams' 2nd Dec., ¶54

2 Amit-Jacobsen: Jacobsen Addresses Amit's Signal Impairments

dish

The ID acknowledges that a POSITA would have implemented Jacobsen's teachings to overcome Amit's signal impairments

Petition → **Institution Decision**

carrier modulation. *Id.* Amit expresses a desire to avoid signal impairments in coaxial networks and Jacobsen teaches techniques for overcoming such impairments using multi-carrier modulation. DISH-1014, 3:19-23, 20:42-43;

Pet., 49

(Fed. Cir. 2017) ("[a]ttorney argument is not evidence"). Petitioner has shown sufficiently that a POSITA considering Amit's and Jacobsen's reflection teachings would have understood that they can be beneficial in facilitating communications between in-home network devices, but that reflections can also be detrimental in some cases, and thus would have understood that reflections must be managed appropriately on the networks.

Institution Decision (ID), 18

2 Amit-Jacobsen: Amit Does not Preclude Multi-Carrier Modulation

dish

Amit's teachings on reflections do not preclude implementing multi-carrier modulation

Petition → **Institution Decision**

DISH-1016, 305. A POSITA would have been motivated to combine Amit and Jacobsen's teachings because they both develop coaxial networks for digital communications and discuss overcoming signal impairments to achieve that goal. *See* §IV.B.1 and §IV.B.2, *supra*; DISH-1004, ¶¶168-170. Both references also recognize that providing high-speed data services on existing wiring infrastructure is a motivator for implementing broadband coaxial networks. *Id.*

Pet., 49

Patent Owner does not refute Petitioner's statement that Petitioner's combination of prior art references recognizes that demand for high-speed data services on existing wiring infrastructure would have motivated a POSITA to implement broadband coaxial networks. Pet. 44–45 (citing Ex. 1016, 305), 49 (citing § IV.B.1–2; Ex. 1004 ¶¶ 168–170); *KSR*, 550 U.S. at 418 ("effects of demands known to the design community or present in the marketplace" may provide a reason to combine known elements).

ID, 19

2 Jacobsen Papers Performed Multi-carrier Cost-benefit Analysis

dish

Petitioner Reply

PO incorrectly argues that adding Jacobsen's multi-carrier modulation to Amit's system undermines Amit's simplicity and low-cost goals. POR, 31-36. But "[t]he fact that [a] motivating benefit comes at the expense of another benefit … should not nullify its use as a basis to modify the disclosure of one reference with the teachings of another." *Winner Int'l Royalty Corp. v. Wang*, 202 F.3d 1340, 1349 n.8 (Fed. Cir. 2000). "Instead, the benefits, both lost and gained, should be weighed against one another." *Id.*

Pet. Reply, 15

Dr. Williams' 2nd Dec.

70. In my opinion, a POSITA properly weighing the benefits, both lost and gained, would implement Jacobsen's multi-carrier modulation in Amit's network. In another paper, Jacobsen2, Jacobsen's author conducted a cost-benefit analysis to evaluate implementing multi-carrier modulation in a coaxial network. That cost-benefit analysis is representative of a POSITA's analysis in this scenario. To balance

Dr. Williams' 2nd Dec., ¶70

Jacobsen2

5 Summary

In this paper, Synchronized Discrete Multi-Tone (SDMT) has been presented as a technique for coordinating multipoint-to-point reverse channel digital communications on cable or HFC networks. Although DMT has been applied traditionally only in point-to-point environments, this paper illustrates that, by appropriately synchronizing remote terminal transmissions, DMT can also be used effectively in multipoint-to-point environments. An example configuration was presented to show that a low-cost, low-complexity SDMT design can be implemented for cable or HFC networks. Thus, SDMT enables cost-effective multipoint-to-point reverse channel communications while preserving the well-known advantages of DMT, including its efficient use of the available bandwidth and its robustness to channel impairments and noise.

DISH-1023 (Jacobsen2), 379; Dr. Williams' 2nd Dec., ¶70

Amit's teachings on reflections do not preclude Jacobsen's solutions

Petitioner's Reply

PO's reliance on the non-precedential decision in *Stryker Corp. v. Karl Storz Endoscopy Am., Inc.* is misplaced. POR, 27. *Stryker* suggests that a petitioner must explain why a POSITA would add an element to perform a function already being performed by another system element. IPR2015-00764, Paper 13 at 13. Here, however, while Amit's optional frequency-shifting module may affect reflections, PO has not shown that the module performs the functions of Jacobsen's ***multi-carrier modulation***, like reducing distortions, adapting to channel degradations, and improving computational efficiency. DISH-1036, ¶¶64-65.

Pet. Reply, 13-14

Mr. Garrett (PO's Expert)

Q. Understood. If you would, can you turn to Column 4 of the '518 patent, specifically the section that is starting around Line 39 of summary of the invention.

A. Yes, sir.

DISH-1039, 101:13-16

Q. So do you understand that sentence as saying that multiple techniques can be used to address signal impairments?

A. The multiple techniques being bitloading, power loading, adaptive power control, and frequency coordination?

Q. Correct.

A. Yes, sir.

Q. And is that consistent with your experience in the field that you can use multiple techniques to address signal impairments?

A. Yes, sir.

DISH-1039, 102:7-18; Pet. Reply, 14

ISSUE

3

A POSITA Would Have Combined Amit-Jacobsen and Isaksson (Ground 2)

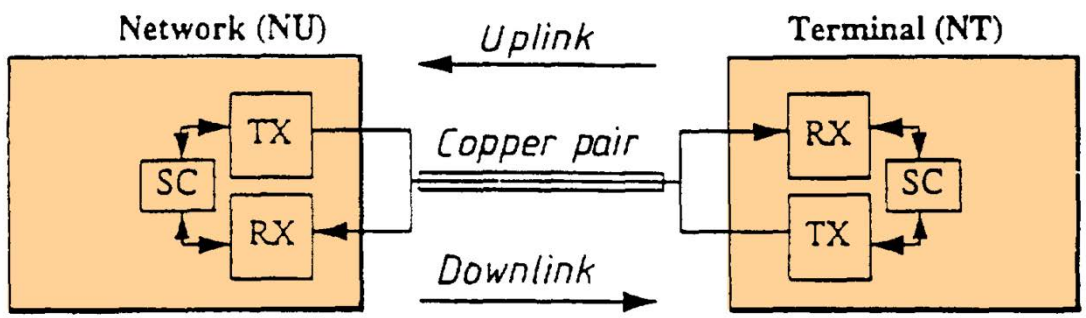

DISH-1013, FIG. 22; Pet., 22

Channel characteristics may be estimated by periodic transmission, by one of said transceivers, of a base sync frame having a predetermined content and comparing, in the other of said transceivers, the received sync frame with a reference frame.

Said channel characteristics may include attenuation, phase shifting and variance.

DISH-1013, 16:8-14; Pet., 22

3 Dr. Williams Explains the Amit-Jacobson-Isaksson Combination

Amit

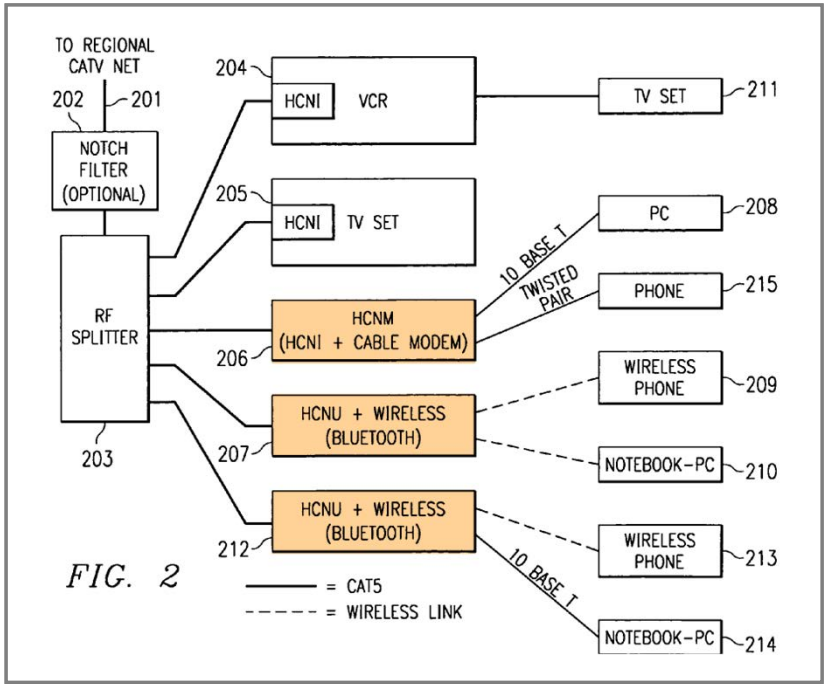

FIG. 2

DISH-1014, FIG. 2; Pet., 43

Dr. Williams' 1st Dec.

180. As I explained previously, Isaksson's bit-loading determines the number of bits each carrier carries based on each carrier's respective channel characteristics. *Id.* Accordingly, Amit's HCN devices would determine each carrier's channel characteristics to determine the number of bits to transmit on each carrier in Jacobsen's multi-carrier modulation. To do so, each Amit-Jacobsen-Isaksson HCN device — as a transmitter — would transmit Isaksson's base sync frames having predetermined content to the other HCN devices over respective channels between the HCN devices. The other HCN devices — as receivers — would analyze Isaksson's received base sync frames to determine channel characteristics of the respective channels. The transmitter HCN device would obtain information about the channel characteristics, e.g., SNR, from the receiver HCN devices and select the bit-loading parameters for the respective channels based on the received information to use in Jacobsen's multi-carrier signaling. The transmitter HCN

Dr. Williams' 1st Dec., ¶180

3 Dr. Williams Explains the Amit-Jacobson-Isaksson Combination

1. Use of known techniques…
2. A teaching, suggestion, or motivation…
3. Combining prior art elements according to known methods…

Dr. Williams' 1st Dec.

182. It is my opinion that a POSITA would have considered the Amit-Jacobsen-Isaksson combination to be an example of (1) use of known techniques (Isaksson's techniques for synchronized bit-loading that involve modems transmitting and analyzing base sync frames for determining channel conditions to select bit-loading) to improve similar devices (Amit's HCN devices that use multi-carrier signaling with bit-loading) in the same way (overcoming interference and maintain connections with other HCN devices); (2) a teaching, suggestion, or motivation in Isaksson that would have led a POSITA to implement the Amit-Jacobsen combination with Isaksson's techniques for synchronized bit-loading; and (3) combining prior art elements (Isaksson's techniques for synchronized bit-loading) according to known methods to yield predictable results (Amit's HCN devices using synchronized bit-loading with multi-carrier signaling to overcome interference and maintain connections with other HCN devices).

Dr. Williams' 1st Dec., ¶182

3 Isaksson's Teachings are not Redundant of Jacobsen

dish

Jacobsen

interferers such as ham radio signals. Because the bit distribution is continuously updated during transmission as the receiver sends the required information to the transmitter on secure overhead channels, even severe and unpredictable interference like ham can be tolerated by a multicarrier system. If the noise on a

DISH-1016, 307; Pet., 46

Petitioner's Reply

Second, even if Jacobsen did teach synchronism, a POSITA would still look to Isaksson for details of how to achieve that synchronism. The Federal Circuit's *Unwired Planet* decision illustrates this point. *Unwired Planet* held that it would have been obvious to combine a secondary reference's teachings on ordering techniques with a primary reference that already disclosed grouping by location, but did not disclose how that grouping was prioritized. *Unwired Planet*, 841 F.3d at

Pet. Reply, 21

ISSUE

4

A POSITA Would Have Combined Kliger and Isaksson (Ground 1)

4 Kliger: A Data Communication Network Over Coax

dish

Kliger

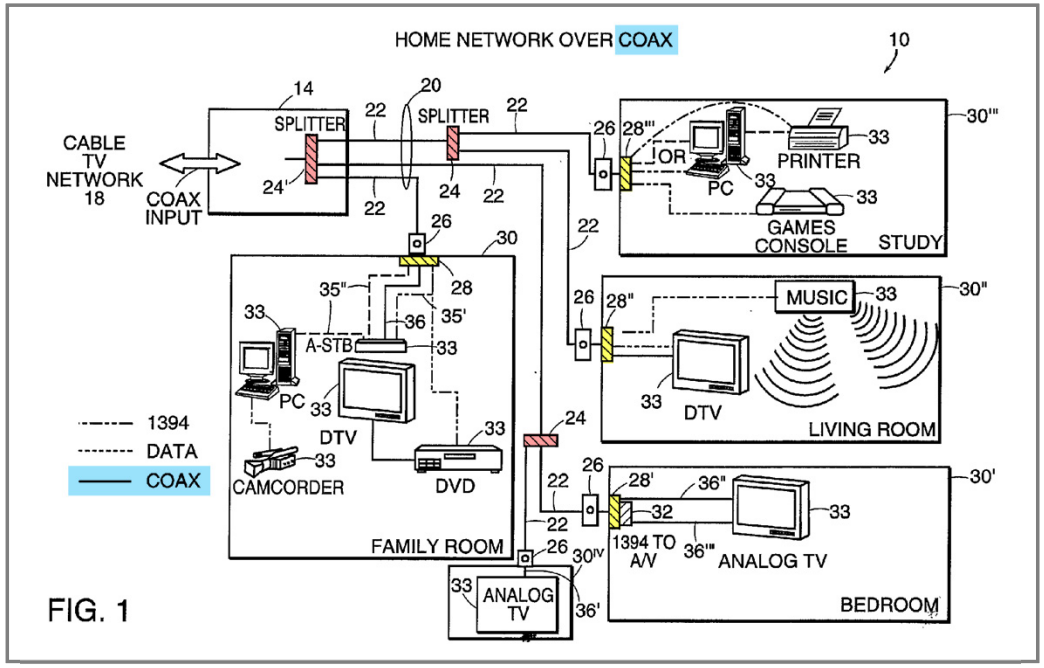

FIG. 1

DISH-1007 (Kliger), FIG. 1; Pet., 18-19

[0047] Each HNM **28** communicates with the DPU **14** and each other HNM **28** on the backbone **20** with analog signals and converts analog signals received from the DPU **14** and the HNMs **28** into digital signals for delivery to devices **33** connected to that HNM **28**. If a room **30** has a legacy device **33** requiring an analog signal (such as an analog or digital TV), but does not have a set-top box, an interface box can convert the digital signal produced by the HNM **28** into a signal that is appropriate for that legacy device. For example, in room **30'**, the HNM **28'** communicates with the analog TV, which requires an analog signal, through the interface box **32**, which converts 1394 digital signals to audio/visual analog signals.

DISH-1007, ¶47; Pet., 20

signals. Another advantage is that the modem **114** enables the home network **10** to coexist with pre-existing low-quality splitters often found in the cable networks of the home. Such splitters are frequency limited—at frequencies above 1000 MHz the performance of such splitters degrades significantly. Reflections can occur at the splitter, resulting in inter-symbol interference to the home network signal.

DISH-1007, ¶73; Pet., 23

4 Kliger-Isaksson: Isaksson's Techniques Improve Kliger

dish

Petition

A POSITA seeking to implement Kliger's network would have understood that Kliger's inter-modem signaling is subject to signal impairments, like interference and noise. Specifically, "[r]eflections can occur at the splitter, resulting in inter-symbol interference to the home network signal." DISH-1007, ¶0073; DISH-1010, 5; DISH-1004, ¶65. And, as explained by Dr. Williams, Kliger's inter-modem signaling is subject to external noise. DISH-1004, ¶66.

Pet., 23

Furthermore, a POSITA would have understood that Kliger's network conditions are dynamic due to the addition/removal of network devices and/or changing external conditions. *Id.*, ¶67. Indeed, Kliger contemplates the addition/removal of network devices to the home network. *Id.* The dynamic nature of the network conditions means that the carriers used in the multi-carrier signaling are subject to variable conditions. Consequently, a carrier that was once clear of interference can later become overwhelmed with interference. *Id.*

Pet., 23-24

4 Dr. Williams Explains the Kliger-Isaksson Combination

dish

Kliger

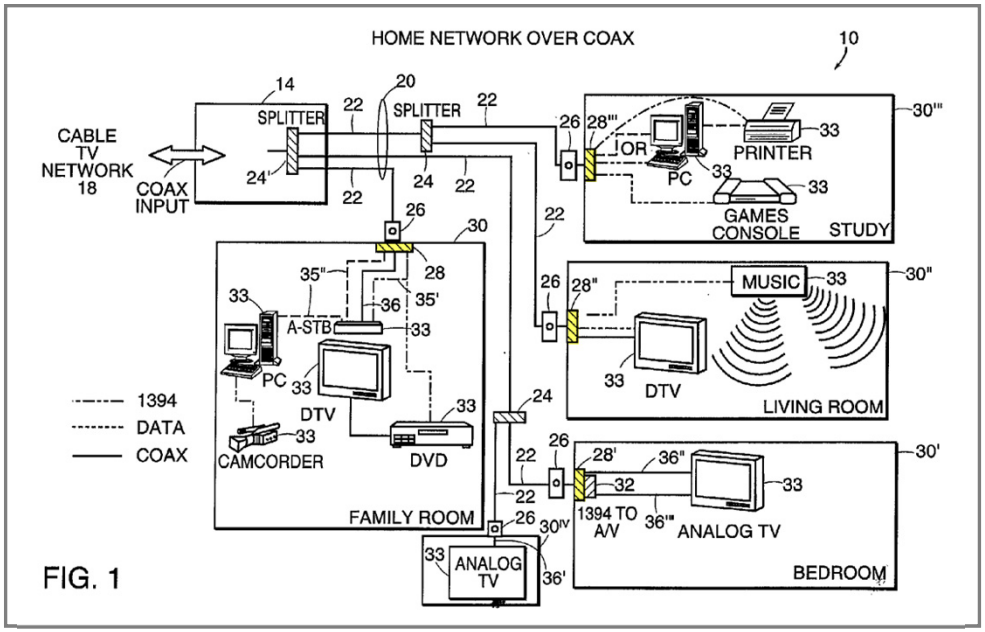

DISH-1007, FIG. 1; Pet., 18-19

Dr. Williams' 1st Dec.

74. As I explained previously, Isaksson's bit-loading technique determines the number of bits each carrier carries based on each carrier's respective channel characteristics. *Id.* Accordingly, Kliger's HNMs would determine each carrier's channel characteristics to determine the number of bits to transmit on each carrier. To do so, each Kliger HNM — as a transmitter — would transmit base sync frames having predetermined content to the other HNMs over respective channels between the HNMs. The other HNMs — as receivers — would analyze the received base sync frames to determine channel characteristics of the respective channels. The transmitter HNM would obtain information about the channel

Dr. Williams' 1st Dec., ¶74

4 Dr. Williams Explains the Kliger-Isaksson Combination

1. Use of known techniques…
2. A teaching, suggestion, or motivation…
3. Combining prior art elements according to known methods…

Dr. Williams' 1st Dec.

75. A POSITA would have considered the Kliger-Isaksson combination to be an example of: (1) use of known techniques (Isaksson's techniques for synchronized bit-loading that involve modems transmitting, receiving, and analyzing base sync frames for determining channel conditions to select bit-loading parameters) to improve similar devices (both Isaksson and Kliger's modems communicate over a wired network) in the same way (like Isaksson's modems, Kliger's HNMs would overcome interference and maintain connections with other HNMs); (2) a teaching, suggestion, or motivation in Isaksson that would have led a POSITA to implement Kliger with Isaksson's techniques for synchronized bit-loading; and (3) combining prior art elements (Isaksson's techniques for synchronized bit-loading) according to known methods to yield predictable results (Kliger's HNMs using Isaksson's synchronized bit-loading with multi-carrier signaling to overcome interference and maintain connections with other HNMs).

Dr. Williams' 1st Dec., ¶75

ISSUE

5

Jacobsen Is Prior Art

5 Jacobsen Is Prior Art

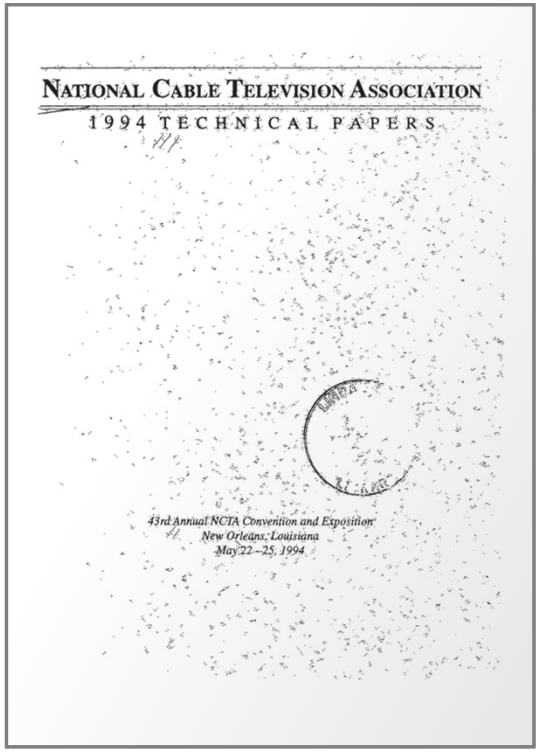

NATIONAL CABLE TELEVISION ASSOCIATION

1994 TECHNICAL PAPERS

43rd Annual NCTA Convention and Exposition
New Orleans, Louisiana
May 22–25, 1994

DISH-1016, Cover pages

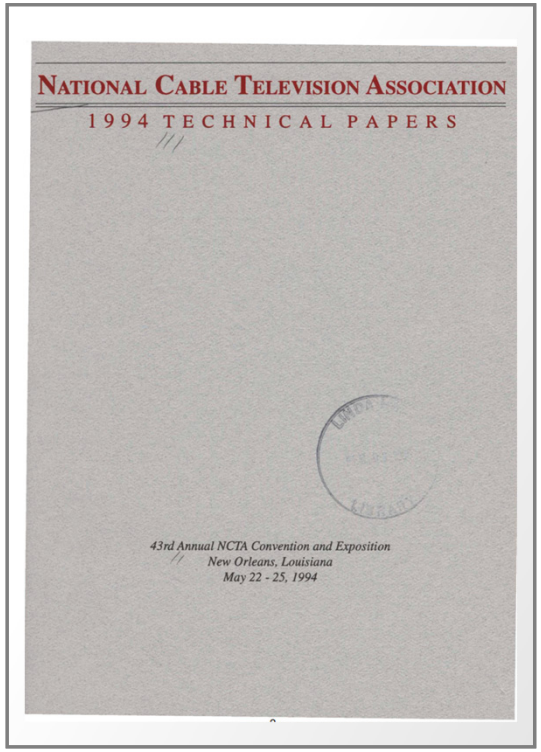

NATIONAL CABLE TELEVISION ASSOCIATION

1994 TECHNICAL PAPERS

43rd Annual NCTA Convention and Exposition
New Orleans, Louisiana
May 22 - 25, 1994

DISH-1016, Cover pages

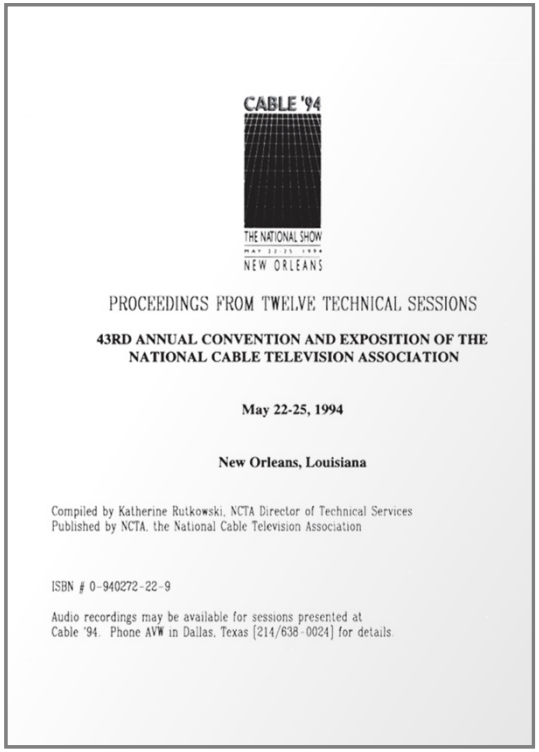

CABLE '94

THE NATIONAL SHOW

NEW ORLEANS

PROCEEDINGS FROM TWELVE TECHNICAL SESSIONS

43RD ANNUAL CONVENTION AND EXPOSITION OF THE NATIONAL CABLE TELEVISION ASSOCIATION

May 22-25, 1994

New Orleans, Louisiana

Compiled by Katherine Rutkowski, NCTA Director of Technical Services
Published by NCTA, the National Cable Television Association

ISBN # 0-940272-22-9

Audio recordings may be available for sessions presented at Cable '94. Phone AVW in Dallas, Texas [214/638-0024] for details.

DISH-1016, Cover pages

5 Jacobsen is Prior Art

dish

The MARC records (008 field) in two different libraries show public accessibility years before the ’518 patent

Munford 2nd Dec.

Government of Canada | Gouvernement du Canada

Search Car

Canada.ca > Science and innovation > Federal Science Libraries Network > Catalogue > National Cable Television A

MARC display

Save this record | Return to record

```
LEADER 00000nam a22000003a 4500
005    19950119000000.0
008    950119s1994    dcu          10    eng r
020    0940272229
040    CaOON|beng|cCaOON
090    TK5101.A1 N277 1994
110 2  National Cable Television Association.|bConvention and
       Exposition|n(43rd :|d1994 :|cNew Orleans, La.)
245 10 National Cable Television Association, 1994 technical
       papers :|b43rd Annual NCTA Convention and Exposition, New
       Orleans, Louisiana, May 22-25, 1994.
260    [Washington, D.C.] :|bThe Association,|c[c1994]
```

DISH-1035 (Munford 2nd Dec.), 98.

Munford 1st Dec.

https://catalog.lindahall.org/discovery/sourceRecord?vid=01LINDAHALL_INST:

```
leader  01558cas a2200397 a 4500
001     992943743405961
005     20191029190347.0
008     950919c199u9999dcuar p       1    0eng
010     ##$a    95640298
012     ##$i9602
035     ##$a(OCoLC)33155936
035     ##$9406627
035     ##$a(MoKL)294374-lhalldb
035     ##$a(lhalldb)294374-lhalldb
037     ##$bNational Cable Television Association, 1724 Massachusetts Ave., NW Washington, DC 20036-
040     ##$aDLC $cDLC $dNYP $dDLC $dLHL
042     ##$alc
049     ##$aLHLA
050     00$aTK6675 $b.N38a
082     00$a621.388/57 $220
110     2#$aNational Cable Television Association. $bConvention and Exposition
245     10$aTechnical papers / $cNational Cable Television Association.
246     13$aProceedings from ... technical sessions
246     0#$aNCTA technical papers
260     ##$aWashington, D.C. : $bThe Association,
```

DISH-1006 (Munford 1st Dec.), 44

5 The "008" MARC Field Is Reliable

dish

The "008" field is not edited

Munford 2nd Dec.

14. The Patent Owner Response also states, "MARC records may be edited after being generated." PO Response at 48. I agree that a MARC record can be edited after the record's initial creation, although with some important clarifications. For example, MARC records are regularly updated to ensure greater accuracy and reflect changes made to the library's collection. A MARC record may also be edited to add additional subject headings, fix typographical errors or reflect changes made to the work's physical status—but these types of edits would not typically involve a header field such as 008. As my determination of Jacobsen's availability is based upon the record 008 field, I will note that I have never edited a 008 field and have never witnessed another librarian edit an 008 field, and I would consider that to be a highly unusual and unlikely field to edit. For example, first, the 008 field is a header field, largely designed to interact with cataloging software on a level invisible to the end user. Catalog functions such as searching, reserving or circulating materials do not rely on this field. Second, header fields are frequently auto-generated by a librarian's cataloging software. Editing this field would be similar to editing a Word doc's metadata. Third, the 008 field does not index information that would need to be regularly updated, unlike fields describing such bibliographic details as author, subject heading or call number.

Munford 2nd Dec., ¶14

5 Jacobsen Is Cited by Other Prior References

Citations by POSITAs show public accessibility before the ’518 patent

Abstract
Authors
References
Citations
Keywords
Metrics
More Like This

Downl
PDF

Abstract:
This paper introduces rapid prototyping of a complex system and the difficulties that appear when a real-time prototype of such a system is approached. These concepts are... **View more**

Metadata
Abstract:
This paper introduces rapid prototyping of a complex system and the difficulties that appear when a real-time prototype of such a system is approached. These concepts are applied to the construction of a test modem for terrestrial broadcasting of digital television, in which orthogonal frequency division multiplexing (OFDM) is the transmission technique. The possibility of reducing the number of sub-carriers in the OFDM signal and obtaining enough information about the system performance in hostile environments (multipath, phase noise, non-linear, ...) is considered and discarded. As a conclusion, a non-real time prototype is presented which allows one to optimize parameters, verify the possibility of implementation and evaluate subjective qualities.

Published in: IEEE Transactions on Consumer Electronics (Volume: 43 , Issue: 4, November 1997)

Page(s): 1100 - 1109

DOI: 10.1109/30.642377

Munford 2nd Dec., 11

Abstract
Authors
References
Citations
Keywords
Metrics
More Like This

Downl
PDF

Abstract:
This paper presents a method for synchronizing a large number of discrete-multitone-based modems for multipoint-to-point communications on hybrid fiber-coax (HFC) network... **View more**

Metadata
Abstract:
This paper presents a method for synchronizing a large number of discrete-multitone-based modems for multipoint-to-point communications on hybrid fiber-coax (HFC) networks. Each newly-installed remote unit is first loop-timed to the central modem master clock. Ranging is then performed to determine the sample delay required to align at the central unit receiver the symbols transmitted by the remote with those transmitted by remote units already operating. Upon completing the synchronization procedure, the remote unit transmits a signal to train the central unit receiver so that the available upstream bandwidth can be used as efficiently as possible during steady-state operation.

Published in: Proceedings of GLOBECOM '95

Date of Conference: 14-16 November 1995

DOI: 10.1109/GLOCOM.1995.502547

Date Added to IEEE *Xplore*: 06 August 2002

Publisher: IEEE

Munford 2nd Dec., 102

ISSUE

6

POSITA Standard

6 Who Is a POSITA?

Petition	Dr. Williams' 1st Dec.	Institution Decision	Patent Owner
a degree in electrical engineering, computer engineering, or a related field and experience working in signal processing and/or communication systems/networks, *e.g.*, a bachelor's and 3 or more years of experience; a master's and at least 1 year of experience; or a doctorate and some work experience. Additional education could substitute for professional experience	a degree in electrical engineering, computer engineering, or a related field and experience working in signal processing and/or communication systems/networks, e.g., a bachelor's and 3 or more years of experience; a master's and at least 1 year of experience; or a doctorate and some work experience. Additional education could substitute for professional experience.	Adopted Petitioner's definition	"A POSITA would have at least a bachelor's degree in electrical engineering, computer engineering, or an equivalent field with at least two years of experience with coaxial cables."

Pet., 13; Dr. Williams' 1st Dec., ¶¶22-23; ID, 9; POR, 11-12.

6 Coaxial Experience Is Not Required by the ’518 Patent

Dr. Williams’ 2nd Dec.

9. I disagree with Mr. Garrett’s additional requirement of “at least two years of experience with coaxial cables.” *Id.* The concepts described in the ’518 Patent, like channel characterization using known sequences, multi-carrier modulation, and bit loading, do not require “at least two years of experience with coaxial cables” to understand or implement. By the alleged priority date of the ’518 Patent, these concepts were commonly used in wired and wireless communication networks. As I explained in my first declaration, the ’518 Patent cites to and incorporates by reference non-coaxial references that used these concepts. DISH-

17. Rather than developing these technologies in isolation, engineers often worked across multiple mediums. The existing infrastructure at the time (which typically included more than one wiring type), different emerging technologies, and the need for interoperability drove efforts to consider solutions across different mediums. DISH-1037, 13. The figure below illustrates the convergence of different

Dr. Williams’ 2nd Dec., ¶¶ 9,17

Amit

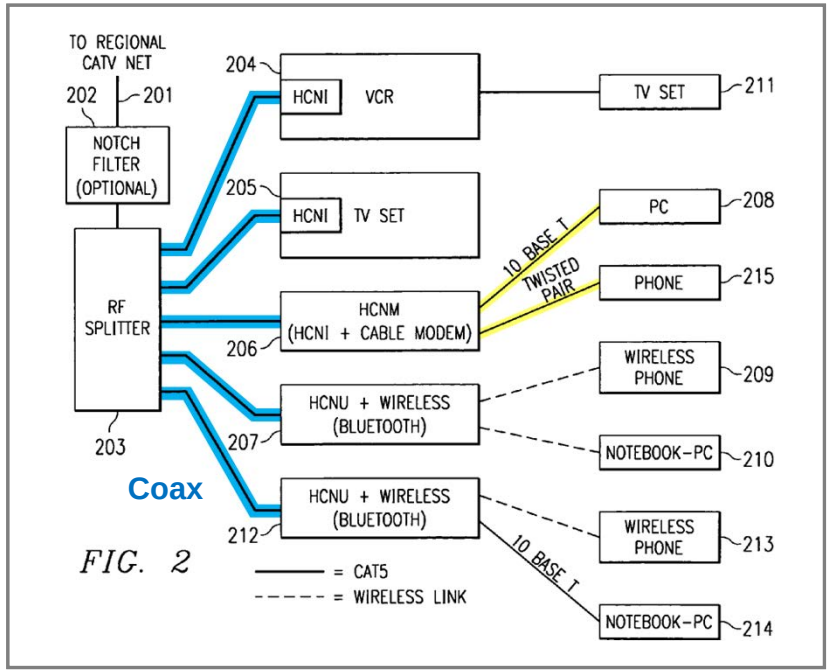

DISH-1014, FIG. 2; Pet., 43

*As explained in the Petition, Amit makes clear that the cables on the left are coax. Pet., 42.

’249 Patent: Table of Contents

Topic	Slide
The ’249 Patent	58
ADSL/VDSL and DSL-Book Are Analogous to the ’249 Patent	63
A POSITA Would Have Combined Amit and ADSL/VDSL	75
A POSITA Would Have Combined Amit and Jacobsen	92
A POSITA Would Have Combined Amit with Jacobsen and DSL-Book	100
Jacobsen is Prior Art	109
POSITA Standard	114

The ’249 Patent

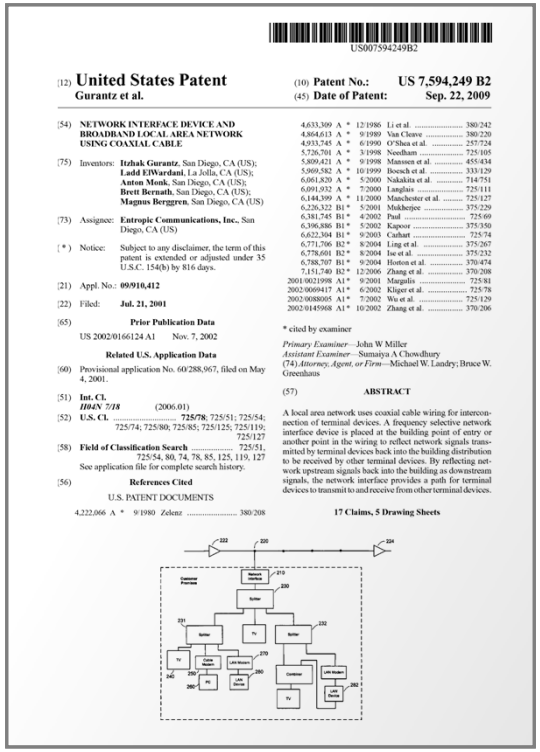

US007594249B2

(12) **United States Patent**
Gurantz et al.

(10) **Patent No.: US 7,594,249 B2**
(45) **Date of Patent: Sep. 22, 2009**

(54) **NETWORK INTERFACE DEVICE AND BROADBAND LOCAL AREA NETWORK USING COAXIAL CABLE**

(75) Inventors: **Itzhak Gurantz**, San Diego, CA (US); **Ladd ElWardani**, La Jolla, CA (US); **Anton Monk**, San Diego, CA (US); **Brett Bernath**, San Diego, CA (US); **Magnus Berggren**, San Diego, CA (US)

(73) Assignee: **Entropic Communications, Inc.**, San Diego, CA (US)

(*) Notice: Subject to any disclaimer, the term of this patent is extended or adjusted under 35 U.S.C. 154(b) by 816 days.

(21) Appl. No.: **09/910,412**

(22) Filed: **Jul. 21, 2001**

(65) **Prior Publication Data**

US 2002/0166124 A1 Nov. 7, 2002

Related U.S. Application Data

(60) Provisional application No. 60/288,967, filed on May 4, 2001.

(51) **Int. Cl.**
H04N 7/18 (2006.01)

(52) **U.S. Cl.** **725/78**; 725/51; 725/54; 725/74; 725/80; 725/85; 725/125; 725/119; 725/127

(58) **Field of Classification Search** 725/51, 725/54, 80, 74, 78, 85, 125, 119, 127
See application file for complete search history.

(56) **References Cited**

U.S. PATENT DOCUMENTS

4,222,066 A * 9/1980 Zelenz 380/208
4,633,309 A * 12/1986 Li et al. 380/242
4,864,613 A * 9/1989 Van Cleave 380/220
4,933,745 A * 6/1990 O'Shea et al. 257/724
5,726,701 A * 3/1998 Needham 725/105
5,809,421 A * 9/1998 Maussen et al. 455/434
5,969,582 A * 10/1999 Boesch et al. 333/129
6,061,820 A * 5/2000 Nakakita et al. 714/751
6,091,932 A * 7/2000 Langlais 725/111
6,144,399 A * 11/2000 Manchester et al. 725/127
6,226,322 B1 * 5/2001 Mukherjee 375/229
6,381,745 B1 * 4/2002 Paul 725/69
6,396,886 B1 * 5/2002 Kapoor 375/350
6,622,304 B1 * 9/2003 Carhart 725/74
6,771,706 B2 * 8/2004 Ling et al. 375/267
6,778,601 B2 * 8/2004 Ise et al. 375/232
6,788,707 B1 * 9/2004 Horton et al. 370/474
7,151,740 B2 * 12/2006 Zhang et al. 370/208
2001/0021998 A1 * 9/2001 Margalis 725/81
2002/0069417 A1 * 6/2002 Kliger et al. 725/78
2002/0088005 A1 * 7/2002 Wu et al. 725/129
2002/0145968 A1 * 10/2002 Zhang et al. 370/206

* cited by examiner

Primary Examiner—John W Miller
Assistant Examiner—Sumaiya A Chowdhury
(74) *Attorney, Agent, or Firm*—Michael W. Landry; Bruce W. Greenhaus

(57) **ABSTRACT**

A local area network uses coaxial cable wiring for interconnection of terminal devices. A frequency selective network interface device is placed at the building point of entry or another point in the wiring to reflect network signals transmitted by terminal devices back into the building distribution to be received by other terminal devices. By reflecting network upstream signals back into the building as downstream signals, the network interface provides a path for terminal devices to transmit to and receive from other terminal devices.

17 Claims, 5 Drawing Sheets

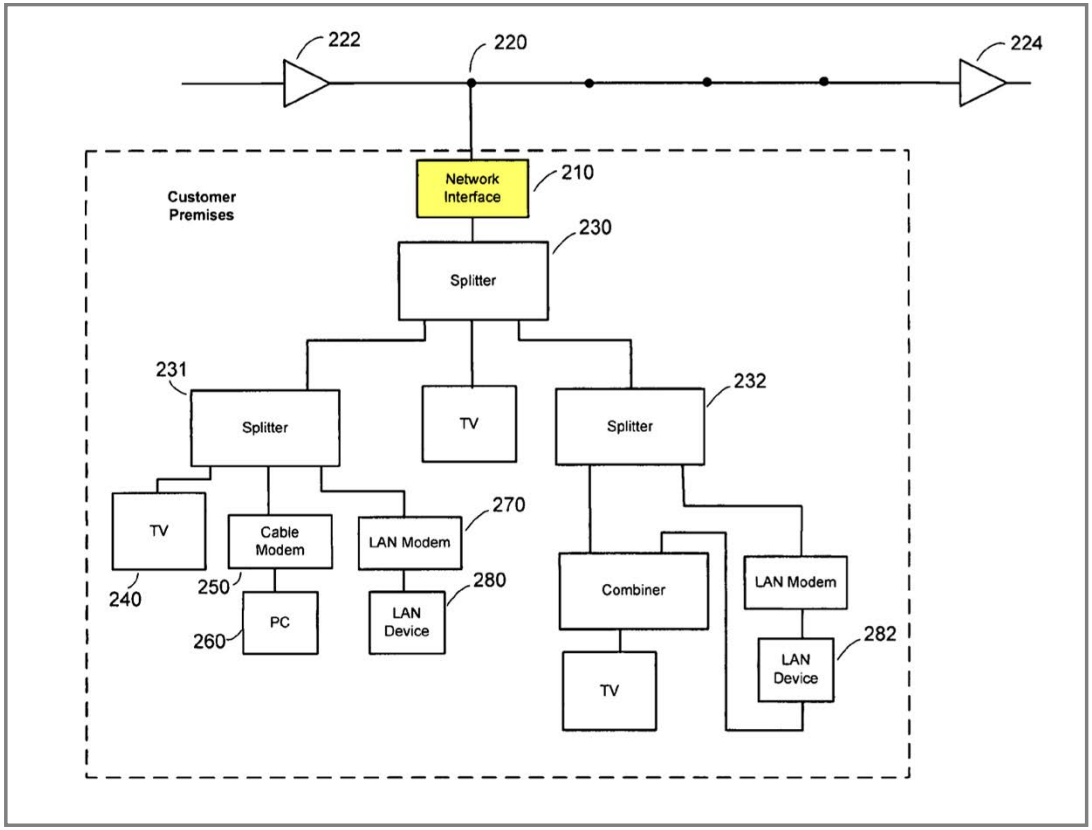

DISH-1001 (’249 Patent), Cover

IPR Asserted Grounds

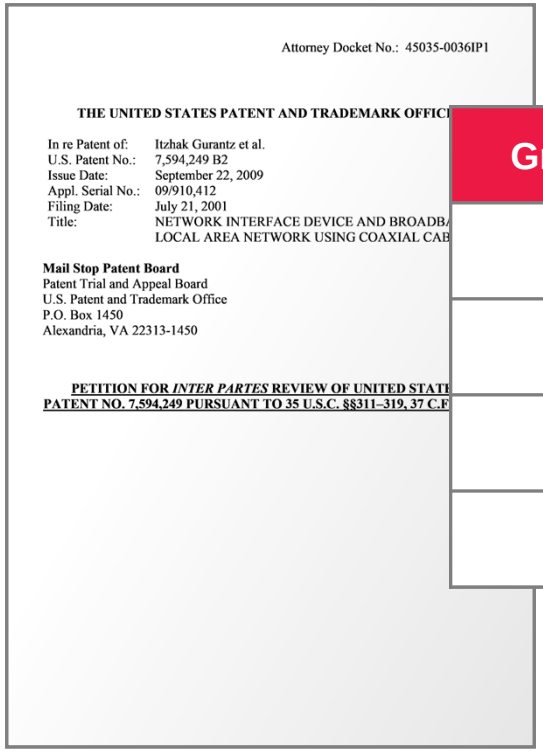
Attorney Docket No.: 45035-0036IP1

THE UNITED STATES PATENT AND TRADEMARK OFFICE

In re Patent of: Itzhak Gurantz et al.
U.S. Patent No.: 7,594,249 B2
Issue Date: September 22, 2009
Appl. Serial No.: 09/910,412
Filing Date: July 21, 2001
Title: NETWORK INTERFACE DEVICE AND BROADB
LOCAL AREA NETWORK USING COAXIAL CAB

Mail Stop Patent Board
Patent Trial and Appeal Board
U.S. Patent and Trademark Office
P.O. Box 1450
Alexandria, VA 22313-1450

PETITION FOR *INTER PARTES* REVIEW OF UNITED STAT
PATENT NO. 7,594,249 PURSUANT TO 35 U.S.C. §§311–319, 37 C.F

Ground	Patent Claims	Basis
1	1-2	§103: Amit
2	1-17	§103: Amit-ADSL/VDSL
3	1-2, 4-6, 8-10, 12-14,	§103: Amit-Jacobsen
4	16-17	§103: Amit-Jacobsen-DSL-Book

Petition (Pet.), 2

’249 Claim 1 – Disputed Limitations

1. A signal distribution network comprising:

a filter located at the point of entry of a building tuned to reject network signals originating in the building, such that the network signals originating in the building do not pass through the filter, but rather are reflected back into the building;

at least one signal splitter, the signal splitter having a common port and a plurality of tap ports, the common port of the signal splitter being coupled to the filter; and

a plurality of terminal devices, each terminal device being coupled to a tap port of at least one signal splitter, at least one of the terminal devices providing frequency bins with more transmit bits which occupy parts of the channel where the signal to noise ratio (SNR) is high;

wherein the reflections from the filter provide a path for terminal devices back through the tap port of the signal splitter and out each other tap port to transmit signals to other terminal devices thus allowing terminal devices to communicate directly with each other to form the signal distribution network.

DISH-1001, 8:61-9:14

a plurality of terminal devices, each terminal device being coupled to a tap port of at least one signal splitter, at least one of the terminal devices providing frequency bins with more transmit bits which occupy parts of the channel where the signal to noise ratio (SNR) is high;

’249 Claim 5 – Disputed Limitations

5. A broadband local area network using coaxial cable building wiring as a communication channel, the network comprising:

a plurality of terminal devices, each terminal device communicating with other terminal devices using orthogonal frequency division multiplexing (OFDM) modulation, at least one of the terminal devices providing frequency bins with more transmit bits which occupy parts of the channel where the signal to noise ratio (SNR) is high;

a network of building cables coupled to the plurality of terminal devices; and

a filter having a first and second port, the first port connected to a building point of entry and the second port connected to the plurality of terminal devices via the network of building cables, wherein signals transmitted by any of the terminal devices and received at the second port of the filter are rejected by the filter such that such signals do not pass through the filter, but rather are reflected back into the network of building cables in order to create a communication path between the transmitting terminal device and at least one other terminal device coupled to the network of building cables.

DISH-1001, 9:32-54

a plurality of terminal devices, each terminal device communicating with other terminal devices using orthogonal frequency division multiplexing (OFDM) modulation, at least one of the terminal devices providing frequency bins with more transmit bits which occupy parts of the channel where the signal to noise ratio (SNR) is high;

’249 Claim 10 – Disputed Limitations

10. A broadband local area network for transmitting modulated signals using coaxial cable building wiring containing a plurality of branches comprising:

a filter located at the point of entry of the building wiring that rejects network signals originating in the building wiring such that the rejected network signals do not pass through the filter, but rather are reflected by the filter back into all branches of the building wiring;

at least one signal splitter;

a plurality of terminal devices connected to the wiring branches, each terminal device capable of communicating with other terminal devices the reflected signal path created by the filter, wherein the terminal devices perform equalization on the received signal that restores a flat frequency response to overcome communication channel impairments caused by the reflected signals.

DISH-1001, 10:18-33

a plurality of terminal devices connected to the wiring branches, each terminal device capable of communicating with other terminal devices the reflected signal path created by the filter, wherein the terminal devices perform equalization on the received signal that restores a flat frequency response to overcome communication channel impairments caused by the reflected signals.

ISSUE

1

ADSL/VDSL and DSL-Book Are Analogous to the ’249 Patent

1 The Two DSL Textbooks Cited by the ’249 Patent

ADSL/VDSL

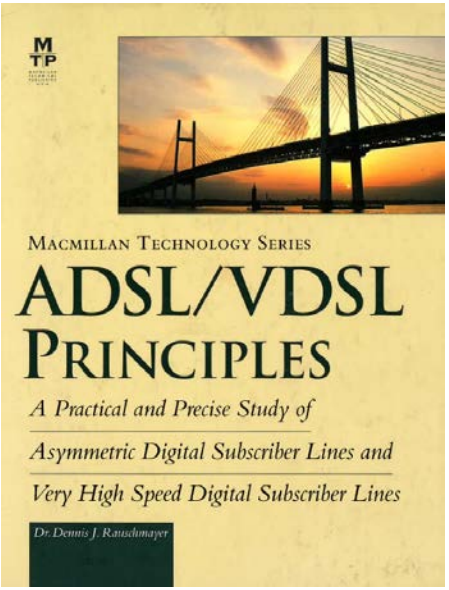

DISH-1006, EX2001, EX2017

DSL-Book

DISH-1008, EX2009

> OFDM provides a mechanism to overcome the frequency selective channel impairments present in coaxial building wiring when employing a network interface device according to the present invention.

DISH-1001, 8:8-11; Pet., 5

> OFDM system architecture is covered in *ADSL/VDSL Principles* by DR. Dennis J. Rauchmayer, Macmillan Technical Publishing, 1999 and *DSL Simulation Techniques and Standards Development for Digital Subscriber Line Systems* by Dr. Walter Y. Chen, Macmillan Technology Publishing, 1998.

DISH-1001, 8:55-60; Pet., 5

1 Mr. Bates Agrees the DSL Textbooks Are in the ’249 Patent Technology Field

dish

Q. At the time of the 249 patent, what are some examples of extrinsic evidence that were known in the Industry concerning the technology field of the 249 patent?

A. Well, what would have been known would have been modulation techniques. As we’ve talked about, they’ve come a long way.

Q. Un-hum.

A. OFDM. At the time of the patent the DSL books were published, so that would be extrinsic evidence that we could look to. The technologies in terms of cabling systems, wiring, twisted pair versus coaxial cable, that would be information that would be available.

EX1029, 120:17-121:5; Petitioner (Pet.) Reply, 14

1 Mr. Bates Agrees LANs and WANs Used Coax and Twisted-Pair

Q. So a service provider is able to create its network through a combination of coaxial cable, twisted pair cable, fiberoptic cable, and whatever other cable --?

A. And radio-based systems, yes.

EX1029, 45:15-18; Pet. Reply, 17

Q. In the '80s and '90s was it common to have LANs that used both twisted pair and coax in a single network?

A. Sure. Yeah. . . .

EX1029, 85:3-5; Pet. Reply, 17

1 The ’249 Patent’s Field of Endeavor

dish

’249 Patent

TECHNICAL FIELD

This invention relates to broadband communication networks and specifically to network interface devices and network wiring.

DISH-1001, 1:12-16

What is claimed is:
1. A signal distribution network comprising:

DISH-1001, 8:61-62

Petitioner’s Proposed Field

A POSITA seeking to improve the coaxial cable network of Amit-Jacobsen would have been familiar with communications textbooks such as DSL-Book—an analogous reference from the same field of endeavor as the ’249 patent: communication techniques for broadband networks. DISH-1003, ¶¶329-353. All

Pet., 78

Patent Owner’s Proposed Field

The ’249 Patent’s field of endeavor—as confirmed by its title, abstract, field of invention, figures, written description, and claims—is local area broadband coaxial cable networks. Ex. 2007, ¶¶151-153.

Patent Owner Response (POR), 29

1 Patent Owner's Proposed Field Excludes Cited Art

dish

'249 Patent

Broadband networks are described in U.S. Pat. No. 5,889,765 Bi-directional communications Network issued to Gibbs, U.S. Pat. Nos. 5,940,387 and 6,005,861 Home Multimedia Network Architecture issued to Humpleman, U.S. Pat. No. 5,870,513 Bi-directional Cable Network with a Mixing Tap or Suppressing Undesirable Noise in Signals From a Remote End of the Network issued to Williams, U.S. Pat. No. 5,805,591 Subscriber Network Interface issued to Naboulsi, U.S. Pat. No. 6,008,368 Ethernet Transport Facility Over Digital Subscriber Lines issued to Rubinstain, U.S. Pat. No. 6,137,793 Reverse Path Multiplexer for Use in High Speed Data Transmissions issued to Gorman, and U.S. Pat. No. 6,091,932 Bidirectional Point to Multipoint Network Using Multicarrier Modulation issued to Langlais, each of which is incorporated herein by reference.

Gibbs disclosed a broadband network overlaid with the cable service frequencies using dynamically allocated TDMA protocols. Humpleman patents disclose a home network using an active network interface unit to couple the home network to the external network. Williams discloses a method of reducing noise accumulated in the frequency bands used by an upstream signal. Naboulsi discloses an active network interface for an asynchronous transfer mode (ATM) network. Rubinstain discloses a method of transporting Ethernet over twisted pair lines. Gorman discloses an active reverse path multiplexer for communication between the cable head-end and subscriber cable modems. Langlais discloses a two-way data transmission system for communicating between an upstream and downstream unit using OFDM. None of these references addresses the problem of tap port-to-port isolation and providing a suitable signal path for terminal-to-terminal communication in a coaxial cable wired building.

DISH-1001, 2:42-3:7; Pet. Reply, 21

1 ADSL/VDSL Is Analogous For Either Field of Endeavor

dish

’249 Patent

OFDM system architecture is covered in *ADSL/VDSL Principles* by DR. Dennis J. Rauchmayer, Macmillan Technical Publishing, 1999 and *DSL Simulation Techniques and Standards Development for Digital Subscriber Line Systems* by Dr. Walter Y. Chen, Macmillan Technology Publishing, 1998.

DISH-1001, 8:55-60; Pet. Reply, 3

ADSL/VDSL

Cable Modems

Cable television delivered via coaxial cable (coax) is available throughout most of the United States and much of Europe. Coax can handle high bandwidths, and cable modems take advantage of this. Cable systems are traditionally a broadcast medium with one line serving many subscribers. Because of this, the subscribers must share the bandwidth of the coax cable. Also, the upstream direction from the subscriber back to the coax distribution point traditionally has not been used to transfer information and, in many areas, does not support transmission. Reconditioning the infrastructure to support upstream transmission is costly and time consuming, and deployment in a geographical area cannot be done until the entire infrastructure in that area is upgraded. Despite this, cable modem standards are under development, and cable modems will continue to be a significant competitor to xDSL.

EX2017, 15; Pet. Reply, 19

1 ADSL/VDSL Is Analogous For Either Field of Endeavor

dish

’249 Patent

OFDM system architecture is covered in *ADSL/VDSL Principles* by DR. Dennis J. Rauchmayer, Macmillan Technical Publishing, 1999 and *DSL Simulation Techniques and Standards Development for Digital Subscriber Line Systems* by Dr. Walter Y. Chen, Macmillan Technology Publishing, 1998.

DISH-1001, 8:55-60; Pet. Reply, 3

ADSL/VDSL

This book discusses networks capable of delivering high-speed data to all end users. Specifically, the book discusses having widespread users connected to the network using traditional telephone lines with access rates in excess of 1 Mbps. Digital Subscriber Line (DSL) technologies, a family of relatively new and exciting high-speed access technologies using ordinary telephone lines, are especially well suited for the access portion or “on ramp” of such a network.

EX2017, 1; Pet., 27

ADSL in WAN Networks

In this chapter:

- An overview of common protocols found in LANs and WANs relevant to networks utilizing ADSL access

EX2017, 253

1 DSL-Book Is Analogous For Either Field of Endeavor

dish

’249 Patent

OFDM system architecture is covered in *ADSL/VDSL Principles* by DR. Dennis J. Rauchmayer, Macmillan Technical Publishing, 1999 and *DSL Simulation Techniques and Standards Development for Digital Subscriber Line Systems* by Dr. Walter Y. Chen, Macmillan Technology Publishing, 1998.

DISH-1001, 8:55-60

Petitioner has shown, on the current record, a reasonable likelihood that a POSITA would have been motivated to combine Amit, Jacobsen, and DSL-Book. Pet. 76–78. As Petitioner contends, the references disclose design and market trends toward faster broadband coaxial networks. *See KSR*, 550 U.S. at 418 (design and market trends may provide motivation). In addition, based on the current record, the three references address similar topics such as high-speed communications, cable networks, and home networks, and address ways to overcome signal impairments on them, which would have led a POSITA to consider them together. *Id.* at 77–78.

Institution Decision (ID), 41

1 DSL-Book Is Analogous For Either Field of Endeavor

dish

DSL-Book

1.5 Chapter-by-Chapter Overview

This book is a collection of simulation/implementation techniques and reference materials for the design and development of DSL systems. It is intended for practicing engineers working in DSL and related fields. Many techniques developed for DSLs can be very useful also for next-generation communication systems, such as a high-throughput home digital network. This book also can be used as a reference for graduate students to aid in their research studies in digital communication systems.

EX2009, 12; Pet. Reply, 13

1 ADSL/VDSL Is Reasonably Pertinent to the ’249 Patent’s Problem

ADSL/VDSL recognizes the same problem as the ’249 Patent and provides solutions, such as equalization and OFDM

’249 Patent

OFDM. None of these references addresses the problem of tap port-to-port isolation and providing a suitable signal path for terminal-to-terminal communication in a coaxial cable wired building.

DISH-1001, 3:4-7; Pet., 5

ADSL/VDSL

Equalization

Most modern communications systems that operate near theoretical limits employ equalization in the transmitter, receiver, or both to optimize or nearly optimize transmission. Often the equalization is done digitally by adaptive digital filters. This approach provides a very flexible way to accommodate different types of channels and different types of noise environments. In most DSLs (as well as in voice-band modems), the adaptive filters converge to optimal initial settings during a training period and then can be updated during normal runtime operation of the system. Training can also be done without a predetermined training phase in what is called *blind equalization*.[9]

Note

Updating is necessary as many channels and noise conditions change over the lifetime of operation. A good example is the change in twisted pair characteristics due to the difference of temperature during the day and night.

EX2017, 187-88; Pet., 50

1 DSL-Book Is Reasonably Pertinent to the ’249 Patent’s Problem

DSL-Book recognizes the same problem as the ’249 Patent and provides solutions, such as equalization and OFDM

’249 Patent

OFDM. None of these references addresses the problem of tap port-to-port isolation and providing a suitable signal path for terminal-to-terminal communication in a coaxial cable wired building.

DISH-1001, 3:4-7; Pet., 5

DSL-Book

Channel Equalization

The usable bandwidth of a twisted-pair telephone subscriber loop is much wider than the voice band telephony channel; however, the channel distortion is also more severe for using the full available bandwidth. Specifically, amplitude attenuation and phase delay could be very different at different frequency regions within the available bandwidth. A transmitting signal could become unrecognizable after going through a telephone subscriber loop because of the amplitude and phase distortion. The channel capacity estimation in the frequency domain only indicates the transmission potential of the telephone subscriber loop—but does not reveal any method of achieving that.

EX2009, 149; Pet., 77

ISSUE

2

A POSITA Would Have Combined Amit and ADSL/VDSL (Ground 2)

2 Amit Teaches the Purported Novelty of the ’249 Patent

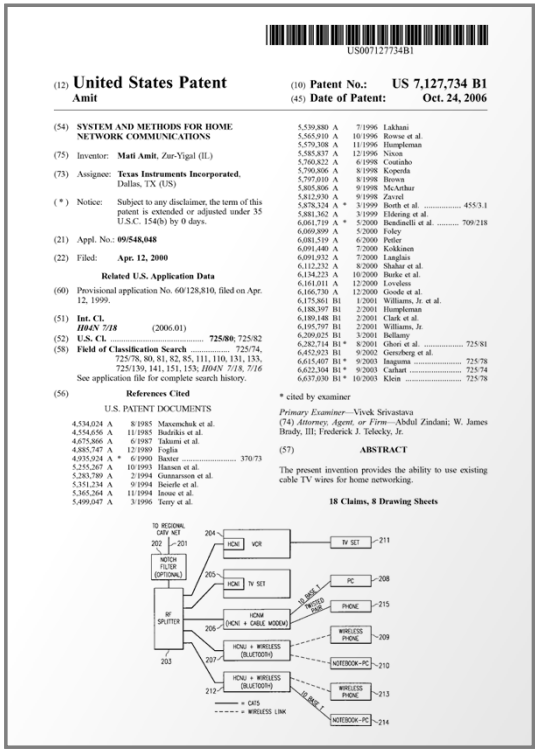

US007127734B1

(12) **United States Patent**
Amit

(10) **Patent No.: US 7,127,734 B1**
(45) **Date of Patent: Oct. 24, 2006**

(54) **SYSTEM AND METHODS FOR HOME NETWORK COMMUNICATIONS**

(75) Inventor: **Mati Amit**, Zur-Yigal (IL)

(73) Assignee: **Texas Instruments Incorporated**, Dallas, TX (US)

(*) Notice: Subject to any disclaimer, the term of this patent is extended or adjusted under 35 U.S.C. 154(b) by 0 days.

(21) Appl. No.: **09/548,048**

(22) Filed: **Apr. 12, 2000**

Related U.S. Application Data

(60) Provisional application No. 60/128,810, filed on Apr. 12, 1999.

(51) **Int. Cl.**
H04N 7/18 (2006.01)

(52) **U.S. Cl.** **725/80**; 725/82

(58) **Field of Classification Search** 725/74, 725/78, 80, 81, 82, 85, 111, 110, 131, 133, 725/139, 141, 151, 153; *H04N 7/18, 7/16*
See application file for complete search history.

(56) **References Cited**

U.S. PATENT DOCUMENTS

4,534,024	A	8/1985	Maxemchuk et al.	
4,554,656	A	11/1985	Badrikis et al.	
4,675,866	A	6/1987	Takumi et al.	
4,885,747	A	12/1989	Foglia	
4,935,924	A *	6/1990	Baxter	370/73
5,255,267	A	10/1993	Haasen et al.	
5,283,789	A	2/1994	Gunnarsson et al.	
5,351,234	A	9/1994	Beierle et al.	
5,365,264	A	11/1994	Inoue et al.	
5,499,047	A	3/1996	Terry et al.	
5,539,880	A	7/1996	Lakhani	
5,565,910	A	10/1996	Rowse et al.	
5,579,308	A	11/1996	Humpleman	
5,585,837	A	12/1996	Nixon	
5,760,822	A	6/1998	Coutinho	
5,790,806	A	8/1998	Koperda	
5,797,010	A	8/1998	Brown	
5,805,806	A	9/1998	McArthur	
5,812,930	A	9/1998	Zavrel	
5,878,324	A *	3/1999	Borth et al.	455/3.1
5,881,362	A	3/1999	Eldering et al.	
6,061,719	A *	5/2000	Bendinelli et al.	709/218
6,069,899	A	5/2000	Foley	
6,081,519	A	6/2000	Petler	
6,091,440	A	7/2000	Kokkinen	
6,091,932	A	7/2000	Langlais	
6,112,232	A	8/2000	Shahar et al.	
6,134,223	A	10/2000	Burke et al.	
6,161,011	A	12/2000	Loveless	
6,166,730	A	12/2000	Goode et al.	
6,175,861	B1	1/2001	Williams, Jr. et al.	
6,188,397	B1	2/2001	Humpleman	
6,189,148	B1	2/2001	Clark et al.	
6,195,797	B1	2/2001	Williams, Jr.	
6,209,025	B1	3/2001	Bellamy	
6,282,714	B1 *	8/2001	Ghori et al.	725/81
6,452,923	B1	9/2002	Gerstberg et al.	
6,615,407	B1 *	9/2003	Inagawa	725/78
6,622,304	B1 *	9/2003	Carhart	725/74
6,637,030	B1 *	10/2003	Klein	725/78

* cited by examiner

Primary Examiner—Vivek Srivastava
(74) *Attorney, Agent, or Firm*—Abdul Zindani; W. James Brady, III; Frederick J. Telecky, Jr.

(57) **ABSTRACT**

The present invention provides the ability to use existing cable TV wires for home networking.

18 Claims, 8 Drawing Sheets

DISH-1005

A summary of some of the key principles of the disclosed system and methods are noted below.

1. Subscribers’ devices may communicate directly (not via the headend) using RF signaling over the coax cable. These signals will typically propagate between the devices via reflections from other devices in the line, e.g. splitters or amplifiers in the line.

DISH-1005, 3:17-23; Pet., 7

8. In a particular embodiment of the present invention, the splitter at the input to the user premises is replaced by a special splitter device that supplies higher quality home networking capabilities, or a filter is connected to the splitter. A passive filter connected to the splitter insures that the home networking signals in a specific home will not interfere with or be interfered by other home networks. This passive filter provides a “single

DISH-1005, 4:30-37; Pet., 9

2 Amit Teaches Notch Filter Reflection

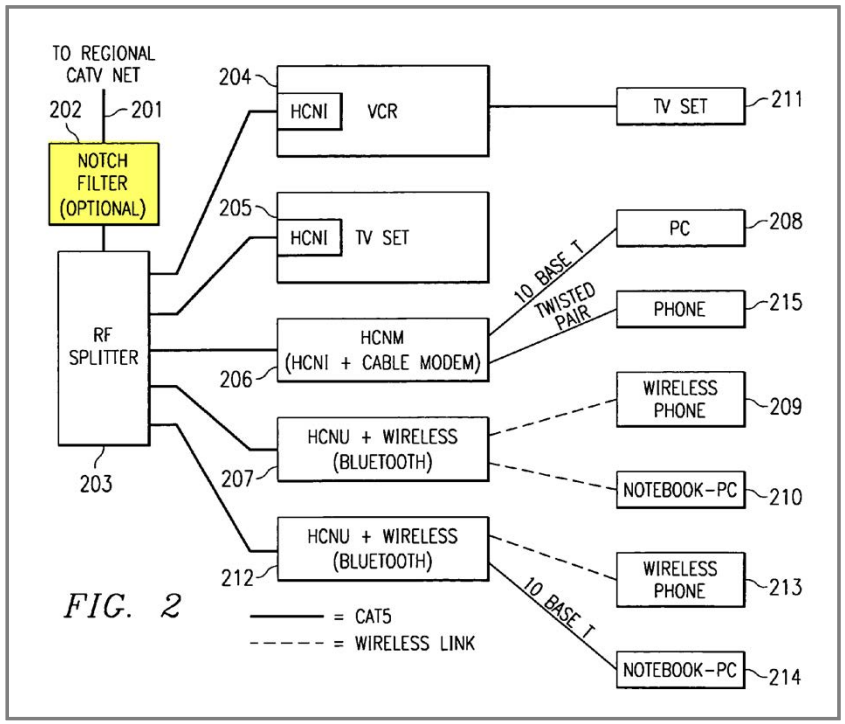

FIG. 2

DISH-1005, FIG. 2; Pet., 10

FIG. **2** shows a Home Cable networking (HomeCN/HCN) that has 5 nodes [**204–207, 212**] of the CATV network, and it is connected to the regional CATV plants via cable [**201**]. Notch filter [**202**], is a band reject filter that does not pass a certain RF range that is used by the home networking devices [**204–207, 212**]. This filter improves the isolation between the home network and other homes as well as the regional network. However, the use of such a filter is

DISH-1005, 6:26-33; Pet., 12

2 Amit's "Modes" Are Not Incompatible Embodiments

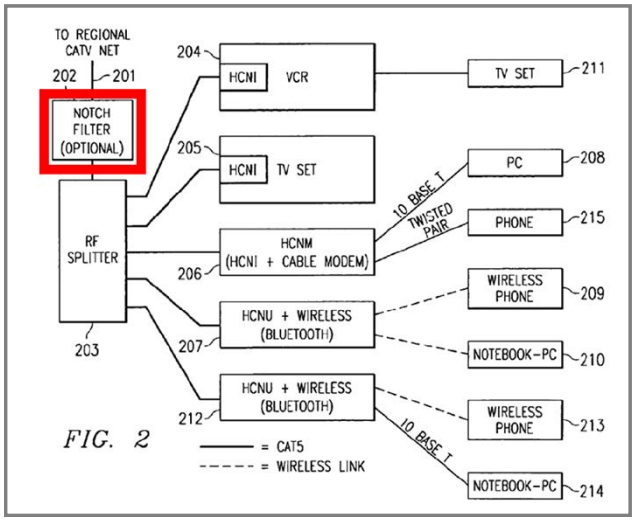

FIG. 2

DISH-1005, FIG. 2; Pet. Reply, 4

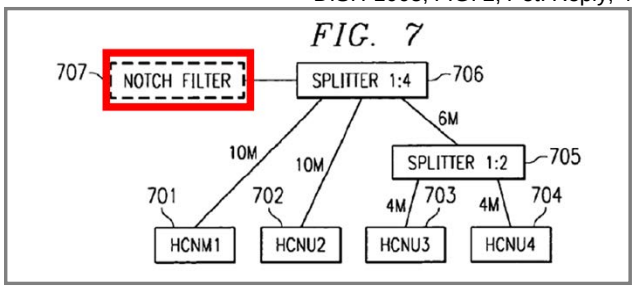

FIG. 7

DISH-1005, FIG. 7; Pet. Reply, 4

The HomeCN Supports Two Operation Modes:

Single Home operation mode—This mode required a Notch filter, or an amplifier that usually supplies similar functionality, or it can be operated in a system that is not connected to the CATV plant.

Connected Home operation mode—This mode does not require a Notch Filter. This mode is more complex and requires additional functionality. Following are some functionalities that are required in the Connected Home operation mode: Wider frequency operation, frequency selection (FDM), multiple bandwidth, privacy, capability to be managed by the headend.

DISH-1005, 7:24-35; Pet. Reply, 4

The default operation mode is Single Home. The management system configures the components to the appropriate mode after initialization.

DISH-1005, 7:48-50; Pet. Reply, 4

2 Amit's Notch Filter Does Not Preclude Outside Communication

The ID agrees that Amit's "devices interface between the regional cable TV network and the in-home network"

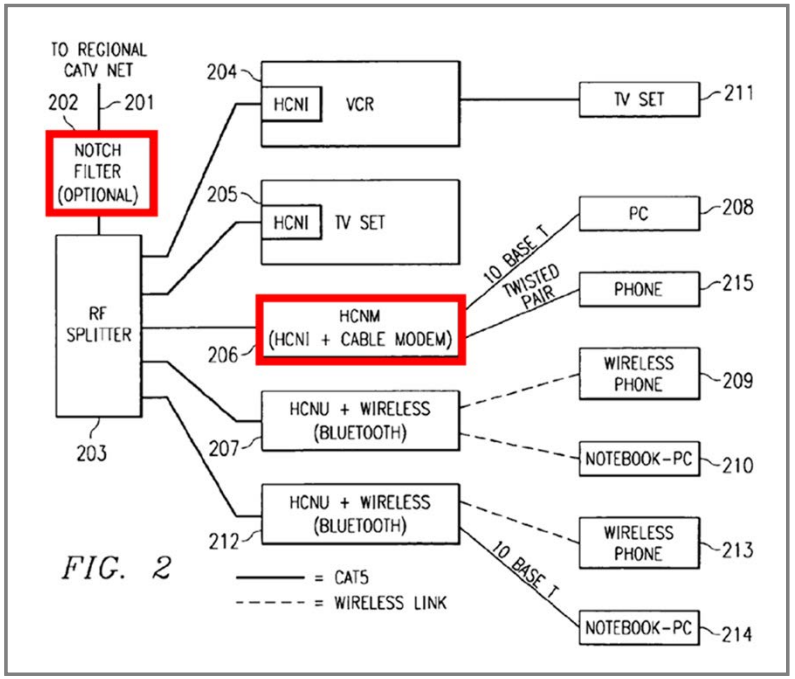

FIG. 2

Pet. Reply, 9 (excerpting DISH-1005, FIG. 2)

A HCNM has at least two physical interfaces.
HCNM interface to the cable side.
This single physical interface contain two data channels (that use different frequencies):
1. Cable Modem Channel.
The cable modem channel (e.g. DOCSIS), containing two sub-channels: up stream channel (US) and down stream (DS) channel.
2. Home Networking Channel.
The Home Networking channel (a single channel that is used for sending and receiving information).
HCNM interface to the home side—Home Interface.

The HCNM bridges messages between the home interface to these cable channels and vice versa. In addition it might support the capability to bridge information between cable modem channel to the home-networking channel and vice versa (This capability is only required when HNO components exists).

DISH-1005, 15:18-30, 15:45-50; Pet. Reply, 9

2 Amit Addresses Twisted-pair Networks

There are several home networking solutions that have already been proposed, including networking over the existing telephone wiring (e.g. HomePNA), networking over the existing power lines, short range wireless networks (Bluetooth), medium range wireless networks (e.g. HomeRF, IEEE802.11), and solutions that require new wiring, such as IEEE1394 (I.LINK) or CAT 5 Ethernet wiring.

DISH-1005, 1:31-37; Pet., 29

Subject	HomePNA	HomeCN
No new wiring	Use the existing phone interfaces small advantage for the number of phone jacks	Use the existing TV cable interfaces Advantage in the location for usage of home networking to entertainment (e.g. TV, VCR, DVD)
Installation	Simple to install and use. Does not required any change in the home wiring.	Simple to be install and use. Usually, does not required any change in the home wiring. In some of the cases it required adding a component in the entrance of the home.
Notch filter adding	Might be required-depends on the VDSL/ HomePNA coexistence.	May be require for low cost equipment, or to enable higher bandwidth.
Low cost	The host-based product price is $79 for 1 Mbps (Intel).	The solution can be in similar prices.
Range	Adequate to a typical home.	
User privacy	Does not require The neighbor can use the cross talk for eavesdropping (intelligence).	Required, only, when the notch filter (or flat amplifier) not exist, and you are afraid from eavesdropping (intelligence) from neighbors that are connected to the same building splitter.
Interferes	Interferes with VDSL	No interferes

DISH-1005, 28:44-67; Pet., 76

2 ADSL/VDSL Addresses Coaxial Networks

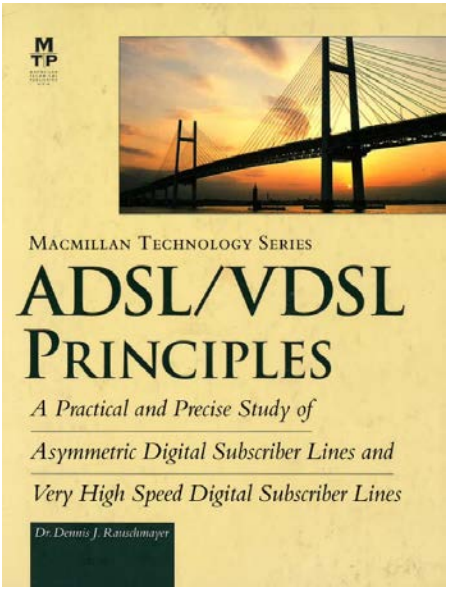

Cable Modems

Cable television delivered via coaxial cable (coax) is available throughout most of the United States and much of Europe. Coax can handle high bandwidths, and cable modems take advantage of this. Cable systems are traditionally a broadcast medium with one line serving many subscribers. Because of this, the subscribers must share the bandwidth of the coax cable. Also, the upstream direction from the subscriber back to the coax distribution point traditionally has not been used to transfer information and, in many areas, does not support transmission. Reconditioning the infrastructure to support upstream transmission is costly and time consuming, and deployment in a geographical area cannot be done until the entire infrastructure in that area is upgraded. Despite this, cable modem standards are under development, and cable modems will continue to be a significant competitor to xDSL.

EX2017, 15; Pet., 29

2 A POSITA Would Have Recognized Communication Channel Impairments in Amit's Network

The modulation method is QPSK, QAM 16, QAM 64 or QAM 256 according to the channel conditions, and according to the equipment capabilities.

DISH-1005, 8:30-32; Pet., 30

There are some RF challenges in designing the HomeCN components:

* * *

High reflection

The reflection from the notch filter is in the power of the signal or it might be higher. When this reflection is higher than the signal we can use this reflection as our main signal.

DISH-1005, 13:54-14:5; Pet. Reply, 12

Requirements:

* * *

4. The Home Networking (HN) is required to supply a scaleable bandwidth range (100 Kb–10 Mb and more).

DISH-1005, 18:46-19:2; Pet. Reply, 28

Nice to have:

* * *

3. An important point is to define this protocol to use limited "cable" resources.

DISH-1005, 19:27-34; Pet., 32

The frequency resources are limited. To increase the

DISH-1005, 9:56; Pet., 32

2 ADSL/VDSL Provides Solutions to Amit's Impairments

This book discusses networks capable of delivering high-speed data to all end users. Specifically, the book discusses having widespread users connected to the network using traditional telephone lines with access rates in excess of 1 Mbps. Digital Subscriber Line (DSL) technologies, a family of relatively new and exciting high-speed access technologies using ordinary telephone lines, are especially well suited for the access portion or "on ramp" of such a network.

EX2017, 1; Pet., 27

Motivation for Higher Bit Rates

Demand for new technologies needs a driver. Several drivers exist for ADSL, including the Internet and World Wide Web (WWW), video services, consumer services, and entertainment services. Synergy with other technological advances has also helped motivate for ADSL. The most noteworthy of these is the widespread deployment of personal computers (PCs) and an increasing awareness in the general public of how to use PCs. The following sections discuss motivations for ADSL and VDSL.

EX2017, 5; Pet., 40

Equalization

Most modern communications systems that operate near theoretical limits employ equalization in the transmitter, receiver, or both to optimize or nearly optimize transmission. Often the equalization is done digitally by adaptive digital filters. This approach provides a very flexible way to accommodate different types of channels and different types of noise environments. In most DSLs (as well as in voice-band modems), the adaptive filters converge to optimal initial settings during a training period and then can be updated during normal runtime operation of the system. Training can also be done without a predetermined training phase in what is called *blind equalization*.[9]

Note

Updating is necessary as many channels and noise conditions change over the lifetime of operation. A good example is the change in twisted pair characteristics due to the difference of temperature during the day and night.

EX2017, 187-88; Pet., 50

DMT builds on some of the ideas of QAM. Imagine having more than one constellation encoder. Each encoder receives a set of bits that are encoded using a constellation encoder as described in the previous sections. The output values from the constellation encoder are

DISH-1006, 166; Pet., 40

2 Amit-ADSL/VDSL Teaches Terminal Devices Providing Frequency Bins (Claims 1, 5)

dish

Amit

The modulation method is QPSK, QAM 16, QAM 64 or QAM 256 according to the channel conditions, and according to the equipment capabilities.

The modulator of the home networking device MUST provide QPSK and QAM 16.

The modulator of the home networking device MAY provide QAM 64 and QAM 256.

DISH-1005, 8:30-36; Pet., 30

ADSL/VDSL

DMT builds on some of the ideas of QAM. Imagine having more than one constellation encoder. Each encoder receives a set of bits that are encoded using a constellation encoder as described in the previous sections. The output values from the constellation encoder are

DISH-1006, 166; Pet., 40

Dr. Acton's 2nd Dec.

ADSL/VDSL teaches that "DMT builds on some of the ideas of QAM," and Amit's terminal devices use QAM. DISH-1006, 166; DISH-1005, 8:30-36. In my opinion, a POSITA building upon QAM using ADSL/VDSL would do so in Amit's terminal devices.

DISH-1030, ¶63

2 Amit-ADSL/VDSL Teaches Terminal Device Equalization (Claim 10)

dish

ADSL/VDSL

Equalization

Most modern communications systems that operate near theoretical limits employ equalization in the transmitter, receiver, or both to optimize or nearly optimize transmission. Often the equalization is done digitally by adaptive digital filters. This approach provides a very flexible way to accommodate different types of channels and different types of noise environments. In most DSLs (as well as in voice-band modems), the adaptive filters converge to optimal initial settings during a training period and then can be updated during normal runtime operation of the system. Training can also be done without a predetermined training phase in what is called *blind equalization*.[9]

EX2017, 187; Pet., 50

Amit

The present invention enables installation of modems, connected to different types of nodes of the CATV, to enable communication between these nodes. The present invention provides a way to transfer data between these nodes, when the data is not required to be transferred to the headend.

DISH-1005, 3:10-14

in-home devices. Parts of the device that are capable of connecting to a headend can be used for both home networking and for cable modem functionality, thus reducing the implementation cost of the home networking functionality. An architecture is proposed in which the home network includes only one device, which can operate both as a cable modem and as a home-networking device. In this architecture, all the other devices can

DISH-1005, 3:49-51

HCNM: Home Cable Networking Modem
A component that include HCN-U and cable modem (e.g. DOCSIS cable modem).
This component supplies a connection to the Home Cable Networking, and a connection to the cable headend.

DISH-1005, 6:14-18; Pet. Reply, 21

2 Amit-ADSL/VDSL Teaches Terminal Device Equalization (Claim 10)

ADSL/VDSL

Equalization

Most modern communications systems that operate near theoretical limits employ equalization in the transmitter, receiver, or both to optimize or nearly optimize transmission. Often the equalization is done digitally by adaptive digital filters. This approach provides a very flexible way to accommodate different types of channels and different types of noise environments. In most DSLs (as well as in voice-band modems), the adaptive filters converge to optimal initial settings during a training period and then can be updated during normal runtime operation of the system. Training can also be done without a predetermined training phase in what is called *blind equalization*.[9]

EX2017, 187; Pet., 50

Amit

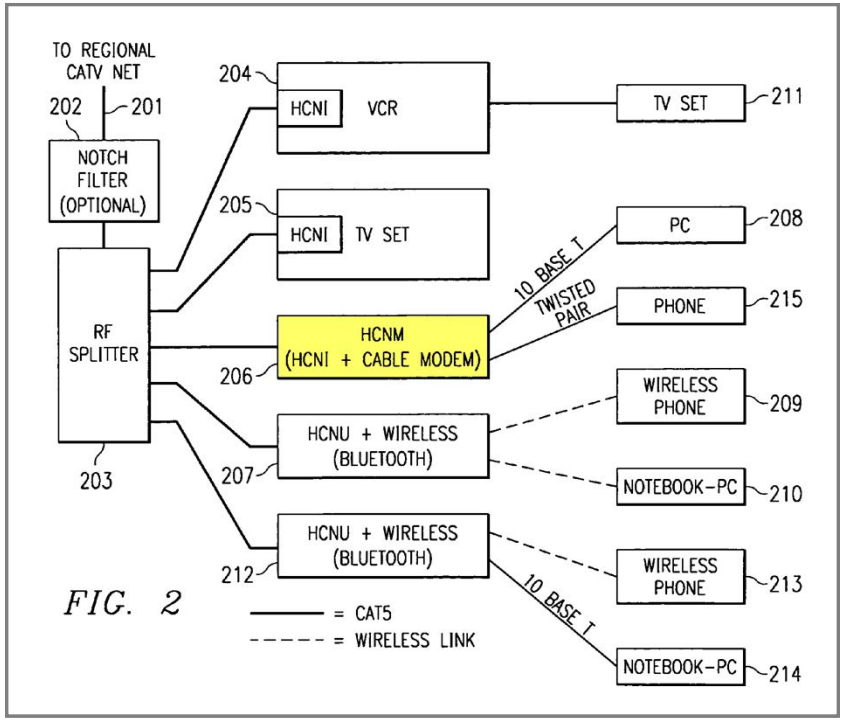

FIG. 2

DISH-1005, FIG. 2; Pet. Reply, 9

2 Amit's Transponder Module Does Not Preclude Equalization

- Petitioner relies on Amit's teachings of "notch filter reflection" and "us[ing] this reflection as our main signal." Pet., 14 (quoting DISH-1005, 13:45-14:5).
- Entropic cites Amit's transponder embodiment from Fig. 20, which does not utilize a notch filter or use reflection to communicate. Pet. Reply, 11-12.
- Moreover, "mere disclosure of **alternative designs** does not teach away" where "such disclosure does not criticize, discredit, or otherwise discourage the solution claimed." *In re Fulton*, 391 F.3d 1195, 1201 (Fed. Cir. 2004). Pet. Reply, 20.

Amit

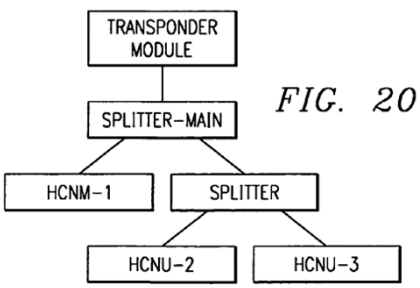

FIG. 20

DISH-1005, FIG. 20; Pet. Reply, 12

Institution Decision

As to Amit's and Jacobsen's reflection teachings, we are persuaded on this record that a POSITA considering them would have understood that reflections can be beneficial in facilitating communications between in-home network devices, but can also be detrimental in some cases, and would have understood that reflections must be managed appropriately on the networks. *See, e.g.*, Pet. 64–65 (citing Ex. 1005, 3:19–23, 20:42–43).

ID, 24

2 Mr. Bates Agrees That a POSITA Would Add Equalization

Q. When did you first encounter equalization?

A. Oh, Lord. I mean, I've been in this business for 50-odd years. I don't know when I actually came across it, but It was in a data communications network probably in the late '60s, maybe. I don't know.

EX1029, 23:1-5; Pet. Reply, 2

Q. Would a system designer look to equalization in any network that is experiencing reflections?

A. I don't see why they wouldn't.

EX1029, 35:15-17; Pet. Reply, 2

2 Amit-ADSL/VDSL Teaches TDD with Beacon Sync (Claim 17)

ADSL/VDSL

Figure 9.11 An example of TDD.

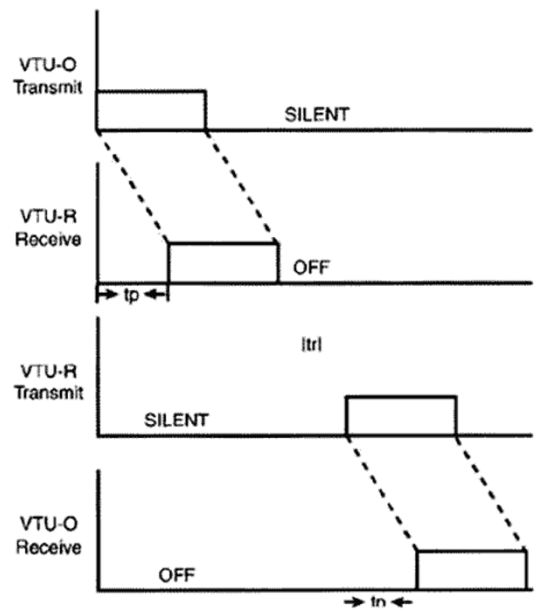

DISH-1006, 295; Dr. Acton's 1st Dec. (DISH-1003), ¶118

The most popular TDD approach proposed for VDSL is the synchronous DMT approach (SDMT). Essentially, this technology employs many of the same fundamental blocks used in ADSL along with the capability to gate the output of the transmitter. (Though many of the same blocks are used, the parameters, such as FFT/IFFT size, will be different.) Figure 9.12 shows a block diagram of an SDMT transmitter and receiver.

DISH-1006, 296; Dr. Acton's 1st Dec., ¶118

One issue related to SDMT is the requirement to properly synchronize frames for VDSL lines in a common binder group. If all lines emanate from a single ONU, this synchronization might be feasible by using a common clock. However, when independent ONUs feed VDSL into the same binder group, achieving frame synchronization is much more difficult.

DISH-1006, 301; Dr. Acton's 1st Dec., ¶118

Pilot Tones

In both the upstream and downstream directions, one of the DMT tones is reserved for a pilot signal. In the downstream direction, the pilot tone is at 276 kHz, or equivalently tone 64. In the upstream direction, the pilot tone is at 69 kHz, or equivalently tone 16. The pilot tones can be used to resolve sample timing at the receiver. The pilot tones will never be used for data, but will always send bits (0,0) from a 4QAM constellation (the constellation point in the first quadrant).

DISH-1006, 225; Dr. Acton's 1st Dec., ¶198

2 Amit-ADSL/VDSL Teaches TDD with Beacon Sync (Claim 17)

dish

’249 Patent

With any form of modulation, the present invention could use a time division duplex (TDD) protocol for communications. In a TDD system, the receive and transmit data are communicated during different time intervals, generally using the same frequency. The advantage of using TDD is that the transceiver design is simplified. Different users share a common frequency channel through the use of time division multiple access (TDMA). In a TDMA system each user transmits during a different time interval. Users are assigned one or more slots of predetermined length in a framing structure that contains multiple slots. All users are synchronized by a beacon message broadcast on the network. The beacon message provides a common time reference to the users and can include other network management information.

DISH-1001, 6:35-48; Dr. Acton’s 1st Dec., ¶299

Dr. Acton’s 2nd Dec.

48. In my opinion, the “pilot tone” taught by ADSL/VDSL teaches the claimed “beacon message.” According to the ’249 Patent, “[a]ll users are **synchronized** by a beacon message,” which “**provides a common time reference** to the users.” DISH-1001, 6:45-48. Pilot tones **synchronize the clock sources** at either ends of a transmission path. As such, it is my opinion that the pilot tone is a beacon message.

* * *

50. I also disagree with Patent Owner’s conclusion that “beacon messages on coaxial cable networks are part of ranging protocols” while pilot tones “us[e] a timing recovery circuit.” POR, 49. In this context, knowing time and knowing distance provide the same information. The distance a signal has traveled is equal to the velocity of the signal multiplied by the time it was traveling, and the velocity is constant (either the speed of light or slightly less). As such, knowing the distance the signal traveled is the same as knowing the amount of time the signal traveled, and knowing the amount of time the signal traveled is the same as knowing the distance the signal traveled. In other words, Patent Owner’s ranging protocol versus timing recovery distinction matters not.

Dr. Acton’s 2nd Dec. (DISH-1030), ¶¶48-50

2 Mr. Bates Agrees that TDD with Beacon Sync Was Common

Q. What types of timing synchronization are you familiar with being used related to TDD?

A. Well, the one I'm most familiar with, of course, is using some form of a beacon message, and a beacon message is I send out a message to you and say let's synchronize what timing.

EX1029, 90:15-20; Pet. Reply, 2

Q. Is it fair to say the use of beacon signals was common in TDD communication systems in the 1990s?

A. I think it probably would have been, yes.

EX1029, 92:23-93:2; Pet. Reply, 2

ISSUE

3

A POSITA Would Have Combined Amit and Jacobsen (Ground 3)

3 A POSITA Would Have Recognized Communication Channel Impairments in Amit's Network

The modulation method is QPSK, QAM 16, QAM 64 or QAM 256 according to the channel conditions, and according to the equipment capabilities.

DISH-1005, 8:30-32; Pet., 30

There are some RF challenges in designing the HomeCN components:

* * *

High reflection

The reflection from the notch filter is in the power of the signal or it might be higher. When this reflection is higher than the signal we can use this reflection as our main signal.

DISH-1005, 13:54-14:5; Pet. Reply, 12

Requirements:

* * *

4. The Home Networking (HN) is required to supply a scaleable bandwidth range (100 Kb–10 Mb and more).

DISH-1005, 18:46-19:2; Pet. Reply, 28

Nice to have:

* * *

3. An important point is to define this protocol to use limited "cable" resources.

DISH-1005, 19:27-34; Pet., 32

The frequency resources are limited. To increase the

DISH-1005, 9:56; Pet., 32

3 Jacobsen Also Recognizes Amit's Impairments

An Efficient Digital Modulation Scheme for Multimedia Transmission on the Cable Television Network

Krista S. Jacobsen* and John M. Cioffi
Information Systems Laboratory
Stanford University
Stanford, California 94305-4055

Abstract

We present a comparison between the performances of single-carrier modulation with equalization and multicarrier modulation on simulated cable television (CATV) channels. Simulations indicate that for a given data rate, the complexity of multicarrier is significantly lower than that of a single-carrier system. Furthermore, multicarrier is able to reduce the effects of various distortions on a CATV network, including microreflections and interference from external signals such as amateur radio, with a reasonable computational complexity while achieving information bit rates on the order of 80 Mbits/s.

Introduction

The feasibility of offering high-speed interactive data services to customers on CATV networks or similar broadband coaxial networks is currently being investigated by a number of service providers. With over 92% of the homes in the United States passed by cable, the CATV network is a potential supplier of these interactive data services. However, there are several electrical transmission problems that must be overcome before these services can be supplied reliably over CATV networks.

Presently, CATV networks are generally simplex broadcast tree- or star-structured networks. However, these networks can be converted for duplex service, as some already have been, by replacing amplifier/repeater segments with so-called "diplex" filters and amplifiers that separate the downstream frequencies (50-550 MHz) from upstream frequencies (5-40 MHz) for interactive transmission. Some CATV networks can also have high-frequency attenuation reduced by the installation of equalizing diplex amplifiers that can boost the usable spectrum to 1 GHz. Even after such installation, however, the network operator finds that only some channels are available for new digital services. Consequently, the deployment of digital services is likely to be incremental and to demand high spectral efficiency in those channels allocated for the new services.

The transmission of digital signals over the CATV network is complicated by two general effects. First, the hardware in CATV networks is not ideal. Taps, amplifiers, and splitters can all cause signals to be reflected at their insertion points. In particular, splitters in subscriber homes are known to have poor isolation characteristics. The effect of reflected signals on the frequency transfer characteristic of a CATV channel is passband ripple, which is known to cause "ghosting" in received analog signals. The effects of rippling on digital signals, however, are more severe. Variations in a channel's frequency response cause successively transmitted symbols to interfere with one another, an effect known as intersymbol interference (ISI). Depending on the absolute deviations of the channel magnitude response (which are determined by the magnitudes of impedance mismatches on a CATV system) and the frequency with which those deviations occur in the frequency response (which depends on the length of coaxial cable between mismatches), a given symbol could interfere significantly with a large number of adjacent symbols. Without some scheme to combat ISI, a receiver would make detection errors. In turn, the detection errors could disable, for example, a digital video

*This work was supported by NSF contract number NCR-9203131, JSEP contract number NCR-9203131, NASA contract number NAG2-842, and an NSF Graduate Fellowship.

The feasibility of offering high-speed interactive data services to customers on CATV networks or similar broadband coaxial networks is currently being investigated by a number of service providers. With over 92% of the homes in the United States passed by cable, the CATV network is a potential supplier of these interactive data services. However, there are several electrical transmission problems that must be overcome before these services can be supplied reliably over CATV networks.

* * *

The transmission of digital signals over the CATV network is complicated by two general effects. First, the hardware in CATV networks is not ideal. Taps, amplifiers, and splitters can all cause signals to be reflected at their insertion points. In particular, splitters in subscriber homes are known to have poor isolation characteristics. The effect of reflected signals on the frequency transfer characteristic of a CATV channel is passband ripple, which is known to cause "ghosting" in received analog signals. The effects of rippling on digital signals, however, are more severe. Variations in a channel's frequency response cause successively transmitted symbols to interfere with one another, an effect known as intersymbol interference (ISI). Depending on

* * *

A second source of signal degradation in CATV networks is interference from other signals. For example, leaks in a CATV network caused by poorly shielded consumer devices or system hardware allow amateur radio (ham) signals to enter the CATV system. Because the frequency spectrum allocations for CATV and ham overlap, receivers on leaky CATV networks can tune interfering ham signals along with the desired signals. As a result, the received signal is degraded.

DISH-1007, 305-306; Pet., 63

3 Jacobsen Teaches How to Overcome Amit's Impairments

dish

The ID acknowledges that a POSITA would have implemented Jacobsen's teachings to overcome Amit's signal impairments

Petition → **Institution Decision**

constellation. Indeed, Amit recognizes that "signals will typically propagate between the devices via reflections from other devices in the line" (DISH-1005, 3:19-23) and that there can be "houses where there is a problem with reflection" (*id.*, 20:42-43). When implementing modulation in Amit's network, a POSITA would have been motivated to look to Jacobsen's teachings of how to compensate for "[v]ariations in a channel's frequency response," which are caused by the signal reflections and result in ISI. DISH-1007, 305.

Pet., 64-65

As to Amit's and Jacobsen's reflection teachings, we are persuaded on this record that a POSITA considering them would have understood that reflections can be beneficial in facilitating communications between in-home network devices, but can also be detrimental in some cases, and would have understood that reflections must be managed appropriately on the networks. *See, e.g.*, Pet. 64–65 (citing Ex. 1005, 3:19–23, 20:42–43). Accordingly, on this record, we do not see Amit's and Jacobsen's reflection teachings as necessarily contradictory.

ID, 24

3 Jacobsen Teaches Terminal Devices Providing Freq. Bins (Claims 1, 5)

Jacobsen

An Efficient Digital Modulation Scheme for Multimedia Transmission on the Cable Television Network

Krista S. Jacobsen* and John M. Cioffi
Information Systems Laboratory
Stanford University
Stanford, California 94305-4055

Abstract

We present a comparison between the performances of single-carrier modulation with equalization and multicarrier modulation on simulated cable television (CATV) channels. Simulations indicate that for a given data rate, the complexity of multicarrier is significantly lower than that of a single-carrier system. Furthermore, multicarrier is able to reduce the effects of various distortions on a CATV network, including microreflections and interference from external signals such as amateur radio, with a reasonable computational complexity while achieving information bit rates on the order of 80 Mbits/s.

ever, these networks can be converted for duplex service, as some already have been, by replacing amplifier/repeater segments with so-called "diplex" filters and amplifiers that separate the downstream frequencies (50-550 MHz) from upstream frequencies (5-40 MHz) for interactive transmission. Some CATV networks can also have high-frequency attenuation reduced by the installation of equalizing diplex amplifiers that can boost the usable spectrum to 1 GHz. Even after such installation, however, the network operator finds that only some channels are available for new digital services. Consequently, the deployment of digital services is likely to be incremental and to demand high spectral efficiency in those channels allocated for the new services.

interferers such as ham radio signals. Because the bit distribution is continuously updated during transmission as the receiver sends the required information to the transmitter on secure overhead channels, even severe and unpredictable interference like ham can be tolerated by a multicarrier system. If the noise on a subchannel becomes severe while the system is in use, the transmitter simply assigns fewer or no bits to that subchannel while the noise persists. Each subchannel

DISH-1007, 307; Pet., 68

Dr. Acton's 2nd Dec.

the noise persists." DISH-1007, 10. Because both the receiver and transmitter participate in providing the frequency bins with more transmit bits, a POSITA would understand that the terminal devices perform this limitation.

DISH-1030, ¶61

3 Jacobsen Teaches Multicarrier Equalization (Claim 10)

dish

Petition

Regarding multicarrier modulation, Jacobsen teaches "the complexity of DMT systems is proportional to the FFT/IFFT size used in the implementation (or, equivalently, the number of sub channels into which the channel is divided)." *Id.*, 308. So Jacobsen teaches "var[ying] the FFT size to determine the effect of a reduced number of subchannels on the achievable bit rate." *Id.* Further, Jacobsen describes using "the smaller FFT sizes (for example, 2N ≤ 256) by implementing a **time-domain equalizer (TEQ)**, the purpose of which is to reduce the required length of the cyclic prefix in exchange for an increase in system complexity." *Id.*, 309. In other words, Jacobsen teaches using equalization in multicarrier modulation—not just single-carrier QAM.

Pet., 70

Jacobsen

cyclic prefix. Therefore, one goal in the design of a multicarrier system is to minimize the percentage of each block wasted by transmitting the cyclic prefix. For any fixed channel impulse response, the percentage of each block lost to the cyclic prefix decreases as the FFT/IFFT size (which is $2N$)[1] is increased. The penalty for the increased FFT/IFFT size is an increase in system complexity. This relationship will be demonstrated in detail in the next section.

each size-$2N$ block. Because we wish to maximize the amount of data transmitted, we cannot arbitrarily decrease the size of our FFT simply because the system throughput remains approximately constant.[4] Conse-

* * *

[4] In actuality, we could use the smaller FFT sizes (for example, $2N \leq 256$) by implementing a time-domain equalizer (TEQ), the purpose of which is to reduce the required length of the cyclic prefix in exchange for an increase in system complexity. A detailed discussion of the TEQ is beyond the scope of this paper, but interested readers should consult [5] or [9] for details.

DISH-1007, 306, 309; Pet., 70

3 Added Complexity Would Not Preclude Equalization (Claim 10)

dish

Petitioner's Reply

DISH-1007, 12, n.4; DISH-1030, ¶¶16-24 (citing DISH-1032-35); *see Winner Int'l Royalty Corp. v. Wang*, 202 F.3d 1340, 1349 n.8 (Fed. Cir. 2000) ("[t]he fact that [a] motivating benefit comes at the expense of another benefit … should not nullify its use as a basis to modify the disclosure of one reference with the teachings of another").

Pet. Reply, 7

Jacobsen

The results of our simulations indicate that discrete multitone modulation is more computationally efficient than single-carrier modulation with equalization for the transmission of digital data over CATV channels with rippled passbands. Furthermore, DMT can

DISH-1007, 312; Pet., 77

[4] In actuality, we could use the smaller FFT sizes (for example, $2N \leq 256$) by implementing a time-domain equalizer (TEQ), the purpose of which is to reduce the required length of the cyclic prefix in exchange for an increase in system complexity. A detailed discussion of the TEQ is beyond the scope of this paper, but interested readers should consult [5] or [9] for details.

DISH-1007, 309; Pet., 70

3 Amit's Transponder Module Does Not Preclude Equalization

- Petitioner relies on Amit's teachings of "notch filter reflection" and "us[ing] this reflection as our main signal." Pet., 14 (quoting DISH-1005, 13:45-14:5).
- Entropic cites Amit's transponder embodiment from Fig. 20, which does not utilize a notch filter or use reflection to communicate. Pet. Reply, 11-12.
- Moreover, "mere disclosure of **alternative designs** does not teach away" where "such disclosure does not criticize, discredit, or otherwise discourage the solution claimed." *In re Fulton*, 391 F.3d 1195, 1201 (Fed. Cir. 2004). Pet. Reply, 20.

Amit

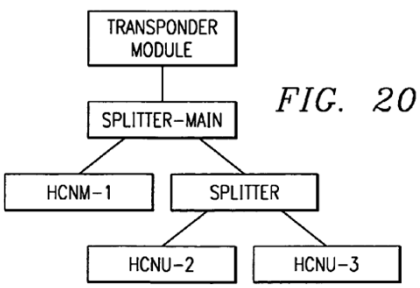

DISH-1005, FIG. 20; Pet. Reply, 12

Institution Decision

As to Amit's and Jacobsen's reflection teachings, we are persuaded on this record that a POSITA considering them would have understood that reflections can be beneficial in facilitating communications between in-home network devices, but can also be detrimental in some cases, and would have understood that reflections must be managed appropriately on the networks. *See, e.g.*, Pet. 64–65 (citing Ex. 1005, 3:19–23, 20:42–43).

ID, 24

ISSUE

4

A POSITA Would Have Combined Amit with Jacobsen and DSL-Book (Ground 4)

4 Amit Addresses Twisted-pair Networks

There are several home networking solutions that have already been proposed, including networking over the existing telephone wiring (e.g. HomePNA), networking over the existing power lines, short range wireless networks (Bluetooth), medium range wireless networks (e.g. HomeRF, IEEE802.11), and solutions that require new wiring, such as IEEE1394 (I.LINK) or CAT 5 Ethernet wiring.

DISH-1005, 1:31-37; Pet., 76

Subject	HomePNA	HomeCN
No new wiring	Use the existing phone interfaces small advantage for the number of phone jacks	Use the existing TV cable interfaces Advantage in the location for usage of home networking to entertainment (e.g. TV, VCR, DVD)
Installation	Simple to install and use. Does not required any change in the home wiring.	Simple to be install and use. Usually, does not required any change in the home wiring. In some of the cases it required adding a component in the entrance of the home.
Notch filter adding	Might be required-depends on the VDSL/ HomePNA coexistence.	May be require for low cost equipment, or to enable higher bandwidth.
Low cost	The host-based product price is $79 for 1 Mbps (Intel).	The solution can be in similar prices.
Range	Adequate to a typical home.	
User privacy	Does not require The neighbor can use the cross talk for eavesdropping (intelligence).	Required, only, when the notch filter (or flat amplifier) not exist, and you are afraid from eavesdropping (intelligence) from neighbors that are connected to the same building splitter.
Interferes	Interferes with VDSL	No interferes

DISH-1005, 28:44-67; Pet., 76

4 DSL-Book Is Not Limited to DSL Networks

1.5 *Chapter-by-Chapter Overview*

This book is a collection of simulation/implementation techniques and reference materials for the design and development of DSL systems. It is intended for practicing engineers working in DSL and related fields. Many techniques developed for DSLs can be very useful also for next-generation communication systems, such as a high-throughput home digital network. This book also can be used as a reference for graduate students to aid in their research studies in digital communication systems.

EX2009, 12; Pet. Reply, 13

4 A POSITA Would Have Recognized Communication Channel Impairments in Amit's Network

dish

The modulation method is QPSK, QAM 16, QAM 64 or QAM 256 according to the channel conditions, and according to the equipment capabilities.

DISH-1005, 8:30-32; Pet., 30

There are some RF challenges in designing the HomeCN components:

* * *

High reflection

The reflection from the notch filter is in the power of the signal or it might be higher. When this reflection is higher than the signal we can use this reflection as our main signal.

DISH-1005, 13:54-14:5; Pet. Reply, 12

Requirements:

* * *

4. The Home Networking (HN) is required to supply a scaleable bandwidth range (100 Kb–10 Mb and more).

DISH-1005, 18:46-19:2; Pet. Reply, 28

Nice to have:

* * *

3. An important point is to define this protocol to use limited "cable" resources.

DISH-1005, 19:27-34; Pet., 32

The frequency resources are limited. To increase the

DISH-1005, 9:56; Pet., 32

4 DSL-Book Provides Solutions to Amit's Impairments

Channel Equalization

The usable bandwidth of a twisted-pair telephone subscriber loop is much wider than the voice band telephony channel; however, the channel distortion is also more severe for using the full available bandwidth. Specifically, amplitude attenuation and phase delay could be very different at different frequency regions within the available bandwidth. A transmitting signal could become unrecognizable after going through a telephone subscriber loop because of the amplitude and phase distortion. The channel capacity estimation in the frequency domain only indicates the transmission potential of the telephone subscriber loop—but does not reveal any method of achieving that.

EX2009, 149; Pet., 77

4 Amit + Jacobsen + DSL-Book

dish

The ID acknowledges that a POSITA would have implemented DSL-Book's teachings in the Amit-Jacobsen combination

Petition → **Institution Decision**

A POSITA would also have been motivated to combine Amit's and Jacobsen's teachings with DSL-Book because all three references seek to overcome network communication channel impairments and are reasonably pertinent to the problem the '249 patent purports to address—"providing a suitable path for terminal-to-terminal communication." DISH-1001, 3:4-7. Amit and

Pet., 77-78

Petitioner has shown, on the current record, a reasonable likelihood that a POSITA would have been motivated to combine Amit, Jacobsen, and DSL-Book. Pet. 76–78. As Petitioner contends, the references disclose design and market trends toward faster broadband coaxial networks. *See KSR*, 550 U.S. at 418 (design and market trends may provide motivation). In addition, based on the current record, the three references address similar topics such as high-speed communications, cable networks, and home networks, and address ways to overcome signal impairments on them, which would have led a POSITA to consider them together. *Id.* at 77–78.

ID, 41

4 Amit-Jacobsen-DSL-Book Does Not Result in Lower Performance

dish

POR

The Petition's arguments improperly rely on phantom "improvements" even where the proposed combination would actually result in a ***lower*** performance. For

POR, 37

The ID correctly recognized that Petitioner contends a POSITA would have incorporated features and techniques from DSL-Book

Institution Decision

2. Motivation to Combine Amit, Jacobsen, and DSL-Book

Petitioner contends that a POSITA would have been motivated to incorporate various features from DSL-Book, including OFDM, equalization, TDD protocol, and FEC, into the Amit-Jacobsen combination. Pet. 75–78 (citing Ex. 1003 ¶¶ 329–353). Petitioner contends that DSL-

* * *

Petitioner further contends that a POSITA would have been motivated to consider techniques in noncoaxial networks in coaxial networks because all three references demonstrate an overlap between coaxial and non-coaxial networks, and DSL-Book recognizes that "[m]any techniques developed for DSLs can be very useful also for next-generation communication systems, such as a high-throughput home digital network." *Id.* at 76–77 (citing Ex. 1005, 1:18–25, 1:31–37, 28:67; Ex. 1008, 12; Ex. 1003 ¶ 332).

ID, 40

4 Amit-Jacobsen-DSL-Book Teaches TDD with Beacon Sync (Claim 17)

dish

DSL-Book

Hybrid Circuits

For half-duplex telegraphs of early days, transmission was carried out only in one direction over one pair of two-wire cables at a given time. The transmission direction can be regulated through some handshake protocol whenever a transceiver at one end has data to transmit. The transmission direction can also be time divided: transceivers at both ends are synchronized and take turns transmitting. This is sometimes called *Time Division Multiplex* (TDM) or *Time Division Duplex* (TDD), respectively. For a telephone conversation, a real-time, full-duplex system, in which telephone subscribers at both ends can talk and listen simultaneously, is preferred to emulate a more natural situation.

EX2009, 91; Pet., 81

Note

A pilot tone is a subcarrier dedicated only for the purpose of timing recovery. A pilot tone has a fixed amplitude and fixed or alternating phases.

EX2009, 444; Pet., 81

Pilot Tone for Timing Recovery

The clock synchronization between a DMT transmitter and a DMT receiver is maintained through a timing recovery circuit in at least one transmission direction. This synchronization is based on the configuration where the transmitter and the receiver at one end of an ADSL system use their own clock source, and the transmitter and receiver at the other end use the recovered clock.

The timing recovery circuit of a DMT system involves the transmission of a pilot tone at the clock source end and the recovery of the pilot tone at the other end. The pilot tone could have periodic phase shift to reduce its interference with other tones. The transmit power of the pilot tone is usually a little lower than other information bearing subcarriers. The recovered pilot tone is usually filtered with a phase locked loop to increase its stability. The transmit power of the pilot tone may actually be more than the nominal transmit power of the information bearing subcarriers, especially for longer loops.

EX2009, 443; Pet., 81

4 Mr. Bates Agrees That TDD with Beacon Sync Was Common

Q. What types of timing synchronization are you familiar with being used related to TDD?

A. Well, the one I'm most familiar with, of course, is using some form of a beacon message, and a beacon message is I send out a message to you and say let's synchronize what timing.

EX1029, 90:15-20; Pet. Reply, 2

Q. Is it fair to say the use of beacon signals was common in TDD communication systems in the 1990s?

A. I think it probably would have been, yes.

EX1029, 92:23-93:2; Pet. Reply, 2

ISSUE

5

Jacobsen Is Prior Art

5 Jacobsen Is Prior Art

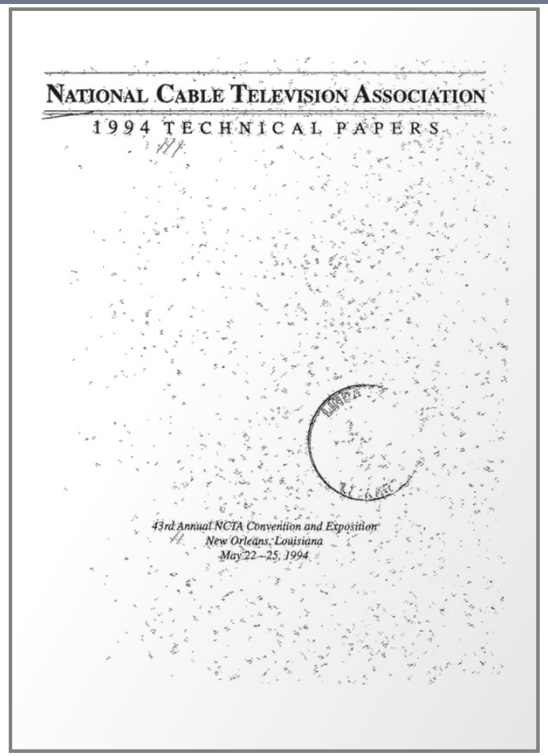

NATIONAL CABLE TELEVISION ASSOCIATION

1994 TECHNICAL PAPERS

43rd Annual NCTA Convention and Exposition
New Orleans, Louisiana
May 22–25, 1994

DISH-1007, Cover pages

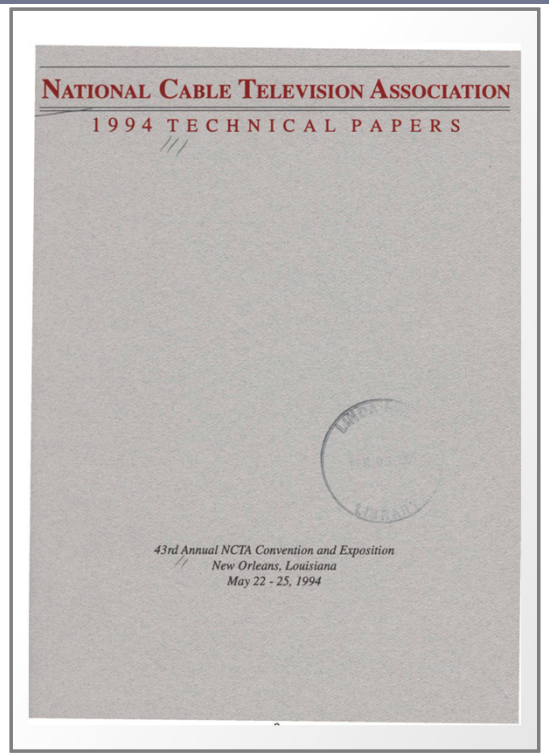

NATIONAL CABLE TELEVISION ASSOCIATION

1994 TECHNICAL PAPERS

43rd Annual NCTA Convention and Exposition
New Orleans, Louisiana
May 22 - 25, 1994

DISH-1007, Cover pages

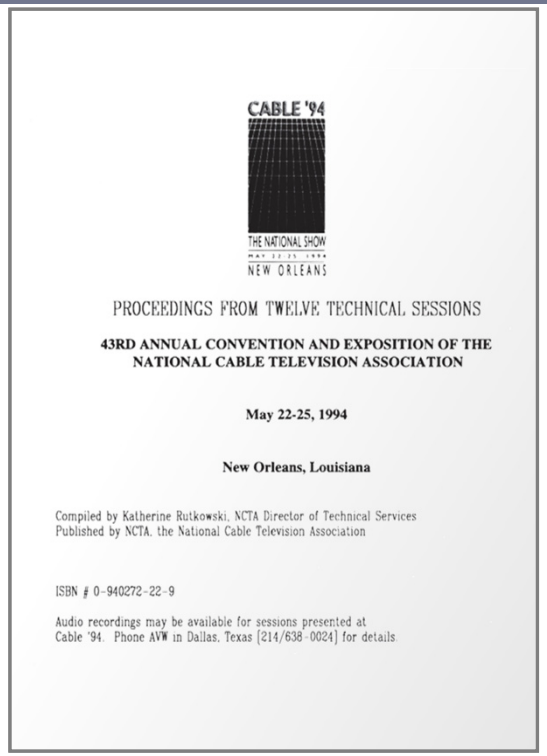

CABLE '94

THE NATIONAL SHOW

NEW ORLEANS

PROCEEDINGS FROM TWELVE TECHNICAL SESSIONS

43RD ANNUAL CONVENTION AND EXPOSITION OF THE NATIONAL CABLE TELEVISION ASSOCIATION

May 22-25, 1994

New Orleans, Louisiana

Compiled by Katherine Rutkowski, NCTA Director of Technical Services
Published by NCTA, the National Cable Television Association

ISBN # 0-940272-22-9

Audio recordings may be available for sessions presented at Cable '94. Phone AVW in Dallas, Texas [214/638-0024] for details.

DISH-1007, Cover pages

5 Jacobsen Is Prior Art

dish

The MARC records (008 field) in two different libraries show public accessibility years before the ’249 patent

Munford 2nd Dec.

Government of Canada | Gouvernement du Canada | Search Car

Canada.ca > Science and innovation > Federal Science Libraries Network > Catalogue > National Cable Television A

MARC display

Save this record | Return to record

```
LEADER 00000nam a22000003a 4500
005    19950119000000.0
008    950119s1994    dcu          10    eng r
020    0940272229
040    CaOON|beng|cCaOON
090    TK5101.A1 N277 1994
110 2  National Cable Television Association.|bConvention and
       Exposition|n(43rd :|d1994 :|cNew Orleans, La.)
245 10 National Cable Television Association, 1994 technical
       papers :|b43rd Annual NCTA Convention and Exposition, New
       Orleans, Louisiana, May 22-25, 1994.
260    [Washington, D.C.] :|bThe Association,|c[c1994]
```

DISH-1031, 26

Munford 1st Dec.

https://catalog.lindahall.org/discovery/sourceRecord?vid=01LINDAHALL_INST:

```
leader  01558cas a2200397 a 4500
001     992943743405961
005     20191029190347.0
008     950919c199u9999dcuar p       1    0eng
010     ##$a    95640298
012     ##$i9602
035     ##$a(OCoLC)33155936
035     ##$9406627
035     ##$a(MoKL)294374-lhalldb
035     ##$a(lhalldb)294374-lhalldb
037     ##$bNational Cable Television Association, 1724 Massachusetts Ave., NW Washington, DC 20036-
040     ##$aDLC $cDLC $dNYP $dDLC $dLHL
042     ##$alc
049     ##$aLHLA
050     00$aTK6675 $b.N38a
082     00$a621.388/57 $220
110     2#$aNational Cable Television Association. $bConvention and Exposition
245     10$aTechnical papers / $cNational Cable Television Association.
246     13$aProceedings from ... technical sessions
246     0#$aNCTA technical papers
260     ##$aWashington, D.C. : $bThe Association,
```

DISH-1022, 74

5 The 008 Field Is NOT Edited

dish

Munford 2nd Dec.

14. The Patent Owner Response also states, "MARC records may be edited after being generated." PO Response at 48. I agree that a MARC record can be edited after the record's initial creation, although with some important clarifications. For example, MARC records are regularly updated to ensure greater accuracy and reflect changes made to the library's collection. A MARC record may also be edited to add additional subject headings, fix typographical errors or reflect changes made to the work's physical status—but these types of edits would not typically involve a header field such as 008. As my determination of Jacobsen's availability is based upon the record 008 field, I will note that I have never edited a 008 field and have never witnessed another librarian edit an 008 field, and I would consider that to be a highly unusual and unlikely field to edit. For example, first, the 008 field is a header field, largely designed to interact with cataloging software on a level invisible to the end user. Catalog functions such as searching, reserving or circulating materials do not rely on this field. Second, header fields are frequently auto-generated by a librarian's cataloging software. Editing this field would be similar to editing a Word doc's metadata. Third, the 008 field does not index information that would need to be regularly updated, unlike fields describing such bibliographic details as author, subject heading or call number.

DISH-1031, ¶14

5 Jacobsen Is Cited by Other Prior References

Citations by POSITAs show public accessibility before the ’249 patent

Abstract
Authors
References
Citations
Keywords
Metrics
More Like This

Downl
PDF

Abstract:
This paper introduces rapid prototyping of a complex system and the difficulties that appear when a real-time prototype of such a system is approached. These concepts are... **View more**

Metadata
Abstract:
This paper introduces rapid prototyping of a complex system and the difficulties that appear when a real-time prototype of such a system is approached. These concepts are applied to the construction of a test modem for terrestrial broadcasting of digital television, in which orthogonal frequency division multiplexing (OFDM) is the transmission technique. The possibility of reducing the number of sub-carriers in the OFDM signal and obtaining enough information about the system performance in hostile environments (multipath, phase noise, non-linear, ...) is considered and discarded. As a conclusion, a non-real time prototype is presented which allows one to optimize parameters, verify the possibility of implementation and evaluate subjective qualities.

Published in: IEEE Transactions on Consumer Electronics (Volume: 43 , Issue: 4, November 1997)

Page(s): 1100 - 1109

DOI: 10.1109/30.642377

DISH-1031, 9

Abstract
Authors
References
Citations
Keywords
Metrics
More Like This

Downl
PDF

Abstract:
This paper presents a method for synchronizing a large number of discrete-multitone-based modems for multipoint-to-point communications on hybrid fiber-coax (HFC) network... **View more**

Metadata
Abstract:
This paper presents a method for synchronizing a large number of discrete-multitone-based modems for multipoint-to-point communications on hybrid fiber-coax (HFC) networks. Each newly-installed remote unit is first loop-timed to the central modem master clock. Ranging is then performed to determine the sample delay required to align at the central unit receiver the symbols transmitted by the remote with those transmitted by remote units already operating. Upon completing the synchronization procedure, the remote unit transmits a signal to train the central unit receiver so that the available upstream bandwidth can be used as efficiently as possible during steady-state operation.

Published in: Proceedings of GLOBECOM '95

Date of Conference: 14-16 November 1995

DOI: 10.1109/GLOCOM.1995.502547

Date Added to IEEE *Xplore*: 06 August 2002

Publisher: IEEE

DISH-1031, 30

ISSUE

6

POSITA Standard

6 Who Is a POSITA?

Petition	Institution Decision	Patent Owner
"A POSITA would have had a Bachelor's degree in electrical engineering, computer engineering, or a related field, and 2-3 years of experience in design or development of signal processing and communication systems or networks. Additional education could substitute for professional experience, or vice-versa."	Adopted Petitioner's definition as "consistent with the prior art references asserted"	"A POSITA would have a bachelor's degree in electrical engineering, or a related field, and at a minimum two to three years of experience in development and design of broadband networks over coaxial cables." "Additional professional experience could substitute for education, and additional education could substitute for professional experience."

Pet., 5; Dr. Acton's 1st Dec., ¶¶17-18; ID, 17; POR, 5-6.

6 Mr. Bates Agrees that Dr. Acton is a POSITA

Q. Do you have an opinion of whether or not Dr. Acton qualifies as a POSITA?

A. I would never challenge him. I believe he is a POSITA, yes.

EX1029, 131:11-14