UNITED STATES PATENT AND TRADEMARK OFFICE

BEFORE THE PATENT TRIAL AND APPEAL BOARD

DISH NETWORK L.L.C.,
Petitioner,

v.

ENTROPIC COMMUNICATIONS, LLC,
Patent Owner.

Case IPR2024-00373
Patent 7,594,249

PETITIONER'S NOTICE OF APPEAL TO THE UNITED STATES COURT OF APPEALS FOR THE FEDERAL CIRCUIT

Pursuant to 35 U.S.C. §§ 141(c) and 319, and 37 C.F.R. § 90.2(a), notice is hereby given that Petitioner DISH Network L.L.C. ("DISH" or "Petitioner") hereby appeals to the United States Court of Appeals for the Federal Circuit from the Final Written Decision on Remand from Director Review in Case No. IPR2024-00373 (Paper 48) ("Amended Final Written Decision"), entered November 14, 2025 by the Patent Trial and Appeal Board and concerning U.S. Patent No. 7,594,249 (the "'249 patent"). DISH also appeals from all underlying orders, decisions, rulings, and opinions related thereto and included therein. This appeal is timely under 35 U.S.C. § 142, 37 C.F.R. § 90.3, Federal Rule of Appellate Procedure 15(a)(1), and Federal Circuit Rule 15(a)(1).

For the limited purpose of providing the Director with the information required by 37 C.F.R. § 90.2(a)(3)(ii) and Federal Rule of Appellate Procedure 15(a)(2)(C), the expected issues on appeal include, but are not necessarily limited to:

1. The Board's determination in the Amended Final Written Decision that claim 2 of the '249 patent was not shown to be unpatentable under 35 U.S.C. § 103 as obvious over U.S. Patent No. 7,127,734 to Amit ("Amit");

2. The Board's determination in the Amended Final Written Decision that claims 2, 3, 9, and 17 of the '249 patent were not shown to be unpatentable under 35 U.S.C. § 103 as obvious over Amit in view of:
    a. Dr. Dennis J. Rauschmayer, *ADSL/VDSL Principles, A Practical and Precise Study of Asymmetric Digital Subscriber Lines and Very High Speed Digital Subscriber Lines* ("ADSL/VDSL") for claims 2, 3, 9, and 17;
    b. Krista S. Jacobsen et al., *An Efficient Digital Modulation Scheme for Multimedia Transmission on the Cable Television Network*, 1994 NCTA Technical Papers, 305–312 ("Jacobsen") for claims 2, 9, and 17; and
    c. Jacobsen and Dr. Walter Y. Chen, DSL, *Simulation Techniques and Standards Development for Digital Subscriber Line Systems* ("DSL-Book") for claims 2, 3, 9, and 17;
3. All of the Board's subsidiary findings purporting to support its determination that claims 2, 3, 9, and 17 of the '249 patent were not shown to be unpatentable under 35 U.S.C. § 103; the Board's failure to consider evidence of record properly; the Board's legal errors in undertaking the obviousness analysis; the Board's findings that conflict

with the evidence of record and are not supported by substantial evidence;

4. The Director's Order Granting Director Review and Vacating-in-Part the Final Written Decision (Paper 47) ("Director Review Order"), entered October 15, 2025, including its vacatur of the Final Written Decision's determination that DISH demonstrated that claims 2, 3, 9, and 17 of the '249 patent are unpatentable under 35 U.S.C. § 103 as obvious under certain of the aforementioned prior-art grounds, *see supra* 1-2, and all procedural aspects associated with the Director's decision to grant review, the Director's review itself, the Director's remand to the Board, and the Board's proceedings on remand from the Director;
5. The Board's denial of DISH's request to submit supplemental briefing following remand to the Board pursuant to the Director Review Order, which the Board communicated via email on October 23, 2025; and
6. All other issues decided adversely to Petitioner in any orders, decisions, rulings, or opinions underlying or supporting the Amended Final Written Decision.

Pursuant to 35 U.S.C. § 142 and 37 C.F.R. § 90.2(a)(1), this notice is being filed with the Director of the U.S. Patent and Trademark Office, and a copy is also

being filed with the Board. In addition, pursuant to Federal Circuit Rule 15(a)(1) and 37 C.F.R. § 90.2(a)(2), DISH also is electronically filing this notice with the Clerk of the U.S. Court of Appeals for the Federal Circuit, and paying the fee set forth in Federal Circuit Rule 52.

Date: January 6, 2026

/Adam R. Shartzer/

Adam R. Shartzer, Reg. No. 57,264
Alyaman Amer, Reg. No. 73,949
Ruffin B. Cordell, Reg. No. 33,487
Michael J. Ballanco, *pro hac vice*
Matthew P. Mosteller, Reg. No. 71,717
John J. Thuermer, Reg. No. 67,682
Timothy Riffe, Reg. No. 43881
Usman Khan, Reg. No. 70439
Aaron P. Pirouznia, *pro hac vice*
Richard A. Sterba, Reg. No. 43,162
Christopher Marchese, Reg. No. 37,177
Fish & Richardson P.C.
60 South Sixth Street, Suite 3200
Minneapolis, MN 55402
T: 202-783-5070
F: 877-769-7945

Counsel for Petitioner

CERTIFICATE OF SERVICE

Pursuant to 37 CFR § 42.6(e), the undersigned certifies that on January 6, 2026, a complete and entire copy of this Petitioner's Notice of Appeal was provided by email, to the Patent Owner by serving the correspondence addresses of record as follows:

Jason A. Engel, Reg. No. 51,654
Jared R. Lund, Reg. No. 78,413
K&L GATES LLP
70 W. Madison Street, Suite 3100
Chicago, IL 60602
Jason.Engel.PTAB@klgates.com
Jared.Lund@klgates.com

Erik J. Halverson, Reg. No. 73,552
K&L GATES LLP
4 Embarcadero Center, Suite 1200
San Francisco, CA 94111
erik.halverson@klgates.com

Joshua N. Andrews, Reg. No. 79,215
K&L GATES LLP
1 Congress St., Suite 2900
Boston, MA 02114
joshua.andrews@klgates.com

Pursuant to 37 C.F.R. § 90.2(a)(1), I hereby certify that in addition to being filed electronically through the Board's P-TACTS System, this Petitioner's Notice

of Appeal is being provided to the Director of the USPTO on January 6, 2026, by electronically filing to the email address as follows:

Director of the United States Patent and Trademark Office
c/o Office of the General Counsel
efileSO@uspto.gov

I hereby certify that on January 6, 2026, a true and correct copy of the foregoing Petitioner's Notice of Appeal, along with a copy of the Final Written Decision on Remand from Director Review, was filed electronically with the Clerk's Office of the United States Court of Appeals for the Federal Circuit, at the following address:

United States Court of Appeals for the Federal Circuit
717 Madison Place, N.W., Suite 401
Washington, DC 20005

Date: January 6, 2026

/Adam R. Shartzer/

Adam R. Shartzer, Reg. No. 57,264
Alyaman Amer, Reg. No. 73,949
Ruffin B. Cordell, Reg. No. 33,487
Michael J. Ballanco, *pro hac vice*
Matthew P. Mosteller, Reg. No. 71,717
John J. Thuermer, Reg. No. 67,682
Timothy Riffe, Reg. No. 43881
Usman Khan, Reg. No. 70439
Aaron P. Pirouznia, *pro hac vice*
Richard A. Sterba, Reg. No. 43,162
Christopher Marchese, Reg. No. 37,177
Fish & Richardson P.C.
60 South Sixth Street, Suite 3200
Minneapolis, MN 55402
T: 202-783-5070

Trials@uspto.gov
571.272.7822

Paper 48
Entered: November 14, 2025

UNITED STATES PATENT AND TRADEMARK OFFICE

BEFORE THE PATENT TRIAL AND APPEAL BOARD

DISH NETWORK LLC,
Petitioner,

v.

ENTROPIC COMMUNICATIONS, LLC,
Patent Owner.

IPR2024-00373[1]
Patent 7,594,249 B2

Before JON M. JURGOVAN, SCOTT B. HOWARD, and AARON W. MOORE, *Administrative Patent Judges.*

JURGOVAN, *Administrative Patent Judge.*

DECISION
Final Written Decision on Remand from Director Review
Determining Some Challenged Claims Unpatentable
35 U.S.C. § 318(a)

[1] IPR2024-01060 has been joined to this case. *See* Paper 26.

I. INTRODUCTION

A. Background and Summary

Dish Network, LLC ("Petitioner") filed a Petition requesting *inter partes* review ("IPR") for all claims 1–17 of U.S. Patent No. 7,594,249 B2 (Ex. 1001, the "'249 patent"). Paper 2 ("Petition" or "Pet."). Entropic Communications, LLC ("Patent Owner") filed a Preliminary Response to the Petition on April 30, 2024. Paper 6. Petitioner filed an authorized Preliminary Reply on May 31, 2024. Paper 7. Patent Owner filed an authorized Preliminary Sur-Reply on June 7, 2024. Paper 8. After consideration of these briefings, we granted institution of *inter partes* review on July 26, 2024. Paper 9 ("Institution Decision" or "Inst. Dec.").

Thereafter, Patent Owner filed a Response on November 1, 2024. Paper 17 ("PO Resp."). Petitioner filed a Reply on January 31, 2025 (Paper 27, "Pet. Reply"). Patent Owner filed a Sur-Reply on March 18, 2025 (Paper 34, "PO Sur-Reply").

On July 1, 2024, DIRECTV, LLC filed a petition and motion for joinder[2] to this proceeding, which we granted on December 23, 2024. Paper 26.

Petitioner and Patent Owner each requested oral argument. Papers 32, 33. The Board held an oral hearing on May 12, 2025, and entered the hearing transcript into the record. Paper 42.

Following oral argument, we entered a Final Written Decision determining all claims of the '249 patent unpatentable. Paper 44 ("Final Dec."). Thereafter, Patent Owner timely requested Director Review (Paper

[2] *See* note 1.

45) and Petitioner filed its Response (Paper 46) to Patent Owner's request for Director Review.

The Director then issued an Order, Paper 47 ("Director's Order" or "Dir. Ord.") granting Director Review, vacating-in-part the Final Written Decision, and remanding the case to this Board panel for proceedings consistent with the Order. The Director vacated-in-part the Final Written Decision because it did not sufficiently address Patent Owner's arguments with respect to claim 17 (and similar claims 2 and 9).

We have jurisdiction under 35 U.S.C. § 6. This Final Written Decision on Remand from Director Review is entered pursuant to 35 U.S.C. § 318(a). Having reviewed the complete trial record, we determine that Petitioner has shown, by a preponderance of the evidence, that the challenged claims are unpatentable except for claims 2, 3, 9, and 17.

B. Real Parties in Interest

Petitioner identifies itself and Dish Network Service LLC, DISH Network Corporation, and Dish Network California Service Corporation as real parties-in-interest. Pet. 93–94 (Petitioner's Mandatory Notices).

DIRECTV, LLC identifies itself as the real party-in interest. IPR2024-01060, Paper 89. DIRECTV, LLC also identifies DIRECTV Holdings LLC, The DIRECTV Group, Inc., and DIRECTV Group Holdings, LLC as related entities that "maintains its own independent status, identity, and structure." *Id.*

Patent Owner identifies itself as the real party-in-interest. Paper 5, 1 (Patent Owner's Mandatory Notice).

C. Related Matters

Petitioner and Patent Owner ("the parties") identify the following as currently pending matters related to this proceeding:

Ex parte reexamination proceeding (Control No. 90/019,247) filed on September 11, 2023;

Entropic Communications, LLC v. DirecTV, LLC, 2-23-cv-05253 (CDCA), filed July 1, 2023;

Entropic Communications, LLC v. DISH Network Corp., 2-23-cv-01043 (CDCA), filed February 10, 2023;

Entropic Communications, LLC v. Cox Communications, Inc., 2-23-cv-01047 (CDCA), filed February 10, 2023;

Entropic Communications, LLC v. Comcast Corp., 2-23-cv-01048 (CDCA), filed February 10, 2023; and

Entropic Communications, Inc. v. ViXS Systems, Inc., 3-13-cv-01102 (SDCA), filed May 8, 2023.

Pet. 94, Paper 5, 1–2, Paper 19, 1–2 (Patent Owner's Updated Mandatory Notices).

Patent Owner identifies the following as a formerly pending matter related to this proceeding:

Entropic Communications, LLC v. Charter Communications, Inc., 2-23-cv-00050 (E.D. Tex.), filed February 10, 2023.

Paper 19, 2.

Patent Owner identifies the following patents and applications as related to the '249 patent:

U.S. Patent No. 7,154,957;

U.S. Patent No. 7,295,518;

U.S. Patent No. 7,499,397;

U.S. Patent No. 7,573,822;

U.S. Patent No. 7,889,759;

U.S. Patent No. 8,411,565;

U.S. Patent No. 8,588,250;

U.S. Patent No. 9,112,803;

U.S. Patent No. 9,860,144;

U.S. Patent Application No. 10/230,687;

U.S. Patent Application No. 10/776,796;

U.S. Patent Application No. 10/778,505;

U.S. Patent Application No. 12/538,339;

U.S. Patent Application No. 15/860,400;

U.S. Provisional Application No. 60/288,967;

U.S. Provisional Application No. 60/316,820;

U.S. Provisional Application No. 60/363,420;

U.S. Provisional Application No. 60/385,361; and

U.S. Patent Application No. 90/019,247.

Paper 19, 2–3.

Patent Owner indicates the following related patents are being asserted by Patent Owner in the above-referenced matters:

U.S. Patent No. 7,295,518;

U.S. Patent No. 7,889,759;

U.S. Patent No. 8,085,802;

U.S. Patent No. 8,228,910;

U.S. Patent No. 8,320,566;

U.S. Patent No. 8,363,681;

U.S. Patent No. 8,621,539;

U.S. Patent No. 8,631,450;

U.S. Patent No. 9,838,213;

U.S. Patent No. 10,257,566; and

U.S. Patent No. 10,432,422.

Paper 19, 3.

IPR2024-00393 (U.S. Patent No. 7,295,518);

IPR2024-00462 (U.S. Patent No. 7,889,759);

IPR2024-00546 (U.S. Patent No. 8,621,539);

IPR2024-00555 (U.S. Patent No. 8,320,566);

IPR2024-00560 (U.S. Patent No. 8,631,450); and

IPR2024-00562 (U.S. Patent No. 8,363,681).

Paper 19, 3–4.

D. The '249 Patent

The '249 patent is titled "Network Interface Device and Broadband Local Area Network Using Coaxial Cable." Ex. 1001, code (54). The '249 patent discloses a local area network that uses coaxial cable wiring to interconnect terminal devices within a building. *Id.* at code (57). A network interface device reflects network signals transmitted by terminal devices back into the building to be received by other terminal devices, thereby establishing a communication path for the terminal devices. *Id.*

Figure 2 of the ’249 patent is shown below.

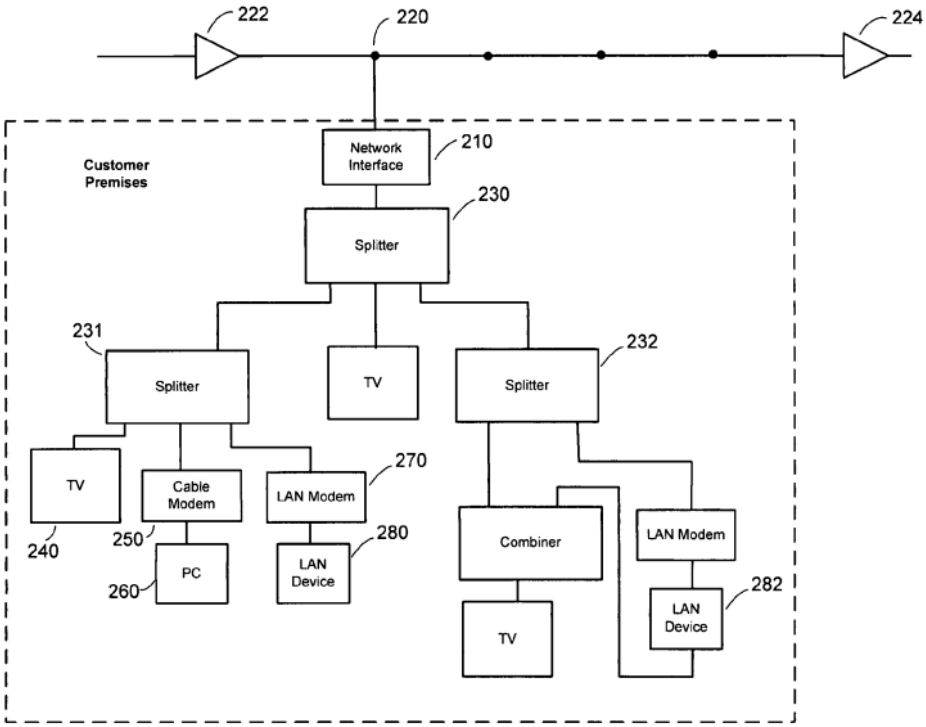

Figure 2 depicts “a diagram showing a signal distribution plan” of the ’249 patent. *Id.* at 3:43–44. Network interface 210 receives a signal from a cable via tap 220, and distributes the signal to “[e]xisting devices” such as a TV 240 and cable modem 250 connected to PC 260. *Id.* at 3:58–59 and 4:14–15. These devices use frequency bands distinct from those of the local area network (“LAN”). *Id.* at 4:14–17 (*see also* Fig. 4 (showing representative frequency bands for upstream and downstream cable signals, and the LAN network)).

Network interface 210 reflects upstream signals from terminal devices so that other terminal devices, such as LAN modem 270, can receive them. *Id.* at 3:64–4:2. LAN modem 270 connects to LAN device 280, e.g., a personal computer (PC), that is the source or destination of data transmitted over the LAN. *Id.* at 4:8–11. LAN device 282 can be a modulator to

produce a signal for driving a TV through a signal combiner. *Id.* at 4:11–13. Splitters 230, 231, 232 provide isolation between terminal devices. *Id.* at 4:2–6.

Figure 3 of the '249 patent is shown below.

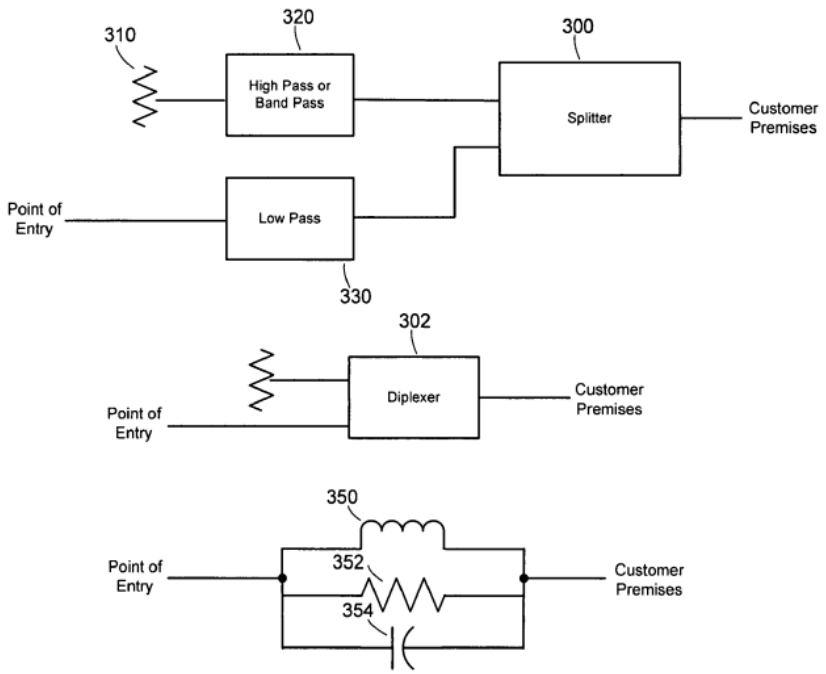

Figure 3 depicts various network interface devices. *Id.* at 3:45–46. In one embodiment (top), the network interface device has splitter 300 with an impedance mismatch 310 to create a reflected signal at one port, a high-pass or band-pass filter 320 coupled to the same port, and a frequency selective filter 330, e.g., a low-pass filter, coupled to a different port. *Id.* at 4:18–22. Filter 330 isolates the LAN signal from the cable plant and passes standard cable service signals. *Id.* at 4:22–25.

The '249 patent uses various methods to overcome multipath effects. *Id.* at 5:64–6:34. These include use of an adaptive equalizer to restore a flat frequency response. *Id.* at 6:9–13. Multipath effects may also be mitigated by multi-carrier techniques such as discrete multi-tone (DMT), orthogonal frequency division multiplexing (OFDM), direct sequence spread spectrum

(DS-SS), and code division multiplexing (CDM). *Id.* at 6:14–31. Time division duplex (TDD) and time division multiple access (TDMA) may be used with any of the described modulation techniques. *Id.* at 6:35–48.

E. Challenged Claims

Claims 1, 5, and 10 are independent. Claims 2–4 depend from claim 1, claims 6–9 depend from claim 5, and claims 11–17 depend from claim 10. Claim 1 is set forth below, with Petitioner's limitation identifiers indicated in brackets.

> **[1.pre]** A signal distribution network comprising:
>
> **[1.a]** a filter located at the point of entry of a building tuned to reject network signals originating in the building, such that the network signals originating in the building do not pass through the filter, but rather are reflected back into the building;
>
> **[1.b.i]** at least one signal splitter,
>
> **[1.b.ii]** the signal splitter having a common port and a plurality of tap ports, the common port of the signal splitter being coupled to the filter; and
>
> **[1.c.i]** a plurality of terminal devices,
>
> **[1.c.ii]** each terminal device being coupled to a tap port of at least one signal splitter,
>
> **[1.c.iii]** at least one of the terminal devices providing frequency bins with more transmit bits which occupy parts of the channel where the signal to noise ratio (SNR) is high;
>
> **[1.d]** wherein the reflections from the filter provide a path for terminal devices back through the tap port of the signal splitter and out each other tap port to transmit signals to other terminal devices thus allowing terminal devices to communicate directly with each other to form the signal distribution network.

Ex. 1001, 8:62–9:14.

Claim 5 is set forth below with Petitioner's limitation identifiers.

[5.pre] A broadband local area network using coaxial cable building wiring as a communication channel, the network comprising:

[5.a.i] a plurality of terminal devices,

[5.a.ii] each terminal device communicating with other terminal devices using orthogonal frequency division multiplexing (OFDM) modulation,

[5.a.iii] at least one of the terminal devices providing frequency bins with more transmit bits which occupy parts of the channel where the signal to noise ratio (SNR) is high;

[5.b] a network of building cables coupled to the plurality of terminal devices; and

[5.c.i] a filter having a first and second port, the first port connected to a building point of entry and the second port connected to the plurality of terminal devices via the network of building cables,

[5.c.ii] wherein signals transmitted by any of the terminal devices and received at the second port of the filter are rejected by the filter such that such signals do not pass through the filter, but rather are reflected back into the network of building cables in order to create a communication path between the transmitting terminal device and at least one other terminal device coupled to the network of building cables.

Ex. 1001, 9:32–54.

Claim 10 is set forth below with Petitioner's identifiers.

[10.pre] A broadband local area network for transmitting modulated signals using coaxial cable building wiring containing a plurality of branches comprising:

[10.a] a filter located at the point of entry of the building wiring that rejects network signals originating in the building wiring such that the rejected network signals do not pass through the filter, but rather are reflected by the filter back into all branches of the building wiring;

> **[10.b]** at least one signal splitter;
>
> **[10.c.i]** a plurality of terminal devices connected to the wiring branches,
>
> **[10.c.ii]** each terminal device capable of communicating with other terminal devices [using] the reflected signal path created by the filter,
>
> **[10.c.iii]** wherein the terminal devices perform equalization on the received signal that restores a flat frequency response to overcome communication channel impairments caused by the reflected signals.

Ex. 1001, 10:18–33.

F. Evidence of Record

Petitioner relies upon the following prior art references:[3]

Name	Reference	Date	Exhibit No.
Amit	US 7,127,734 B1	Issued Oct. 24, 2006	Ex. 1005
ADSL/VDSL	Dr. Dennis J. Rauschmayer, *ADSL/VDSL Principles, A Practical and Precise Study of Asymetric Digital Subscriber Lines and Very High Speed Digital Subscriber Lines*	Published 1999	Ex. 1006

[3] Petitioner alleges that all of the prior art references were filed, issued or published before the '249 patent's earliest alleged priority date of May 4, 2001. Pet. 2. Petitioner contends that all of these references are prior art under 35 U.S.C. §§ 102(b) and (e) (pre-Leahy-Smith America Invents Act, Pub. L. No. 112-29, 125 Stat. 284 (2011) ("AIA")). *Id.* Patent Owner disputes that Jacobsen is prior art (PO Resp. 24–27) but does not refute Petitioner's contention that the remaining references are prior art to the '249 patent.

Jacobsen	Krista S. Jacobsen et al., *An Efficient Digital Modulation Scheme for Multimedia Transmission on the Cable Television Network*, 1994 NCTA Technical Papers, 305–312	Published 1994	Ex. 1007
DSL-Book	Dr. Walter Y. Chen, DSL, *Simulation Techniques and Standards Development for Digital Subscriber Line Systems*	Published 1998	Ex. 1008

Petitioner supports its challenges against the ’249 patent with declarations from Dr. Scott Acton. Ex. 1003; Ex. 1030. Patent Owner supports its arguments for patentability with a declaration from Mr. Regis Bates. Ex. 2007. Depositions of these declarants are in the record. Ex. 1029; Ex. 2008. The record also contains other documentary and testimonial evidence.

G. The Asserted Challenges to Patentability

Petitioner asserts the following challenges to patentability (Pet. 2):

Ground	Challenged Claims	35 U.S.C. §	Reference(s)
1	1–2	103	Amit
2	1–17	103	Amit, ADSL/VDSL
3	1–2, 4–6, 8–10, 12–14, 16–17	103	Amit, Jacobsen
4	2–3, 7, 9–13, 15, 17	103	Amit, Jacobsen, DSL-Book

II. ANALYSIS AND DISCUSSION

In this section, we discuss Petitioner's challenges to claims 1–17 of the '249 patent and Patent Owner's arguments for patentability. For the reasons that follow, we determine that Petitioner has shown by a preponderance of the evidence that claims 1, 4–8, and 10–16 of the '249 patent are unpatentable, but not claims 2, 3, 9, and 17.

A. Legal Standards for Obviousness

A patent claim is unpatentable under 35 U.S.C. § 103(a) if the differences between the claimed invention and the prior art are such that the claimed invention as a whole would have been obvious at the time the invention was made to a person having ordinary skill in the art to which the claimed invention pertains. *KSR Int'l Co. v. Teleflex Inc.*, 550 U.S. 398, 406 (2007). The question of obviousness is resolved on the basis of underlying factual determinations including: (1) the scope and content of the prior art; (2) any differences between the claimed subject matter and the prior art; (3) the level of ordinary skill in the art; and (4) where present, objective evidence of nonobviousness. *Graham v. John Deere Co.*, 383 U.S. 1, 17–18 (1966).

B. Level of Ordinary Skill in the Art

The person of ordinary skill in the art is a hypothetical person who is presumed to know the relevant prior art. *In re GPAC Inc.*, 57 F.3d 1573, 1579 (Fed. Cir. 1995) (citing *Custom Accessories, Inc. v. Jeffrey–Allan Indus., Inc.*, 807 F.2d 955, 962 (Fed. Cir. 1986)). In determining the skill level, the Board may consider various factors including "the type of problems encountered in the prior art; prior art solutions to those problems; rapidity with which innovations are made; sophistication of the technology;

and educational level of active workers in the field." *Id.* In a given case, every factor may not be present, and one or more factors may predominate. *Id.*

Petitioner contends as follows:

> A POSITA would have had a Bachelor's degree in electrical engineering, computer engineering, or a related field, and 2–3 years of experience in design or development of signal processing and communication systems or networks. . . . Additional education could substitute for professional experience, or vice-versa.

Pet. 6 (citing Ex. 1003 ¶¶ 17–18).

Patent Owner contends the following:

> A POSITA would have a bachelor's degree in electrical engineering, or a related field, and at a minimum two to three years of experience in development and design of broadband networks over coaxial cables. . . . Experience with coaxial networking is central to the patent's field of work. . . . Additional professional experience could substitute for education, and additional education could substitute for professional experience.

PO Resp. 5 (citing Ex. 2007 ¶¶ 57–58).

The parties' proposals are similar except for the POSITA's experience.

Considering the parties' proposals and the record evidence, we adopt the following level of ordinary skill in the art, which we apply in this Decision:

> A POSITA would have a bachelor's degree in electrical engineering, computer engineering, or a related field, and two to three years of experience with broadband communication networks. Additional professional experience could substitute for education, and additional education could substitute for professional experience.

We find Patent Owner's proposal to limit a POSITA's education and experience to "broadband networks over coaxial cables" too narrow. Although Patent Owner points to various parts of the '249 patent as supporting its restrictive proposal, other parts of the patent are not so limited. For example, the patent's technical field and summary are not limited to coaxial cable, and the patent discusses LAN wiring, twisted pair, and satellite as communications media that can be used. *See, e.g.*, Ex. 1001, 1:11–16, 2:65–66, 3:9–37, 3:58–61, 7:4–5.

In addition, while Patent Owner indicates that the '249 patent addresses "the problem of tap port-to-port isolation and providing a suitable signal path for terminal-to-terminal communication in a coaxial cable wired building" (*id.* at 3:4–7), we see no reason why this problem and the solutions proposed in the '249 patent (using frequency bins to bit load or equalization) would not be equally applicable to other kinds of communication media.

Therefore, we find our adopted skill level to be consistent with the problems and solutions identified in the '249 patent and prior art references asserted by Petitioner. In addition, we find the adopted skill level consistent with the education and experience that a POSITA would have had. Ex. 1002 ¶¶ 17–18; Ex. 2007 ¶¶ 57–58.

C. Claim Construction

We construe the challenged claims under the same standard used by a federal court in a civil action under 35 U.S.C. § 282(b). 37 C.F.R. § 42.100(b). This standard is articulated in *Phillips v. AWH Corp.*, 415 F.3d 1303 (Fed. Cir. 2005) (en banc) and its progeny, and includes "construing

the claim in accordance with the ordinary and customary meaning of such claim as understood by one of ordinary skill in the art and the prosecution history pertaining to the patent." 37 C.F.R. § 42.100(b).

Only claim terms in controversy need to be construed, and only to the extent necessary to resolve the controversy. *See Vivid Techs., Inc. v. Am. Sci. & Eng'g, Inc.*, 200 F.3d 795, 803 (Fed. Cir. 1999).

Petitioner contends that the challenged claims would have been "obvious under any reasonable interpretation, so no express constructions are required." Pet. 3. Patent Owner does not offer any construction for any claim term.

Accordingly, there is no dispute over claim construction that we need to resolve. We apply the ordinary and customary meanings consistent with 37 C.F.R. § 42.100(b).

D. Ground 1: Obviousness over Amit

Petitioner contends that claims 1 and 2 of the '249 patent would have been obvious over Amit. Pet. 6–26. Patent Owner asserts that these claims are patentable. PO Resp. 51–58, 61–63.

We do not reach claim 1 here because the Director's Order does not vacate our determination that claim 1 is unpatentable under grounds 3 and 4. Dir. Ord. 3. The Director's Order vacated our decision for claim 2, which is dependent from claim 1, and thus we address under this ground the specific limitations of claim 2 as well as Petitioner's and Patent Owner's respective contentions. *Id.* After consideration of the parties' contentions and evidence, we have determined that Petitioner has not demonstrated by a preponderance of the evidence that claim 2 would have been unpatentable for reasons provided below.

1. Claim 2

Claim 2 depends from claim 1 and recites "wherein at least one of the communication channels between terminal devices uses time division duplex protocol for communications and the communications are synchronized by broadcasting a beacon message on the network."

Petitioner contends that Amit teaches claim 2. Pet. 26 (citing Ex. 1003 ¶¶ 92–96) (the disclosure of Amit is addressed in Section II.F.1, *infra*). Specifically, Petitioner contends that Amit teaches that there are alternatives for channel allocation for home networks, including known methods such as TDM. *Id.* (citing Ex. 1005, 26:1–45). Petitioner argues that "[a] POSITA would have understood [that] Amit's network would use TDD for communication channels between terminal devices because TDD is the application of TDM to separate outgoing and incoming signals, which is why it is referred to as time domain **duplex**." *Id.* (citing Ex. 1003 ¶ 94; Ex. 1015; Ex. 1016) (emphasis Petitioner's).

Petitioner alleges that Amit explains that its method requires synchronization and that a HCNU is "required to get the sync from the cable modem network." *Id.* (citing Ex. 1005, 26:35–45). Petitioner contends that the '249 patent acknowledges, by referencing and incorporating Gibbs (U.S. Patent No. 5,889,765, issued March 30, 1999), that it was "generally known in the art that TD-based protocols use broadcast beacon messages to synchronize nodes." *Id.* (citing Ex. 1001, 2:42–59, 6:35–48; Ex. 1003 ¶ 95; Ex. 1017; Ex. 1018). Petitioner asserts that "a POSITA would have understood that broadcasting a beacon message on the network is a common way of synchronizing TDM communications and would have understood such a message to be inherent in Amit's network or, separately, would have

been motivated [to] include such a message." *Id.* (citing Ex. 1003 ¶¶ 92–96).

Patent Owner argues that Amit does not disclose TDD but instead discloses time division multiplexing (TDM), which are not the same. PO Resp. 46–48 (citing Ex. 1005, 7:16–19, 26:9–11, 26:41–42, 26:49–52; Ex. 2007 ¶¶ 95, 145–147, 211; Ex. 2008, 48:2–7), 63. We agree with Patent Owner that TDM is not the same as the claimed TDD. *Id.* at 46–47. Furthermore, Gibbs, incorporated by reference in Amit, mentions TDM, TDMA, FDM, FDMA, and CDMA, but not TDD.

The '249 patent explains the difference between TDD and TDMA, a type of TDM (*see* Ex. 1003 ¶ 94), as follows:

> With any form of modulation, the present invention could use a time division duplex (TDD) protocol for communications. In a TDD system, the receive and transmit data are communicated during different time intervals, generally using the same frequency. The advantage of using TDD is that the transceiver design is simplified. Different users share a common frequency channel through the use of time division multiple access (TDMA). In a TDMA system each user transmits during a different time interval. Users are assigned one or more slots of predetermined length in a framing structure that contains multiple slots. All users are synchronized by a beacon message broadcast on the network. The beacon message provides a common time reference to the users and can include other network management information.

Ex. 1001, 6:35–48.

In other words, as Patent Owner correctly asserts, "TDD is a duplexing technique where two transmitters on a channel take turns communicating between each other, while TDM is a multiplexing technique where a channel is divided into multiple time slots (e.g., 24) where several parties can communicate simultaneously." PO Sur-Reply 20 (citing

Ex. 1029, 17:7–18:8, 88:4–25). Patent Owner's assertion that Amit does not disclose TDD is bolstered by Amit's disclosure that with TDM "bandwidth allocation can be dynamic according to the needs" of the network. Ex. 1005, 26:1–45. TDD does not dynamically allocate time slots among multiple users, as TDM does.

Other evidence in the record supports Patent Owner's assertion that TDM and TDD are different technologies. *See, e.g.*, Ex. 1015 ("Lipoff"), 567 ("In the case of TDD, both receive and transmit of the handset and base station occur on the same frequency, ping-pong alternating in time."); Ex. 2017, 295 ("TDD is a half-duplex approach for sending signals between two endpoints" in which "one modem transmits while its peer modem only receives" and "[a]fter a set amount of time, the process reverses, and the first modem only receives while its peer transmits."); Ex. 2007 ¶ 146 (explaining that "different versions of TDM transmit multiple streams through a single communications channel through portioning the stream into unique time slots"); Ex. 1017, 333 ("When signals are added together such that they do not overlap in time, this is known as *time division multiplexing (TDM)*.").

Petitioner and its expert argue that TDD is "the application of TDM to separate outgoing and incoming signals, which is why it is referred to as time domain **duplex**." Pet. 26 (citing Ex. 1003 ¶ 94; Ex. 1015; Ex. 1016 "Ovadia"). However, the evidence that Petitioner points to does not support this statement. *See* Ex. 1003 ¶ 94 (citing Ex. 1015, 567). For example, the quoted portion of Lipoff does not appear to state that TDD is an application of TDM, or mention TDM at all. *See* Ex. 1015, 567. Even if this statement was correct, it does not establish that TDM and TDD are equivalent due to the differences already discussed.

2. Conclusion for Ground 1

Accordingly, we determine that Petitioner has not shown preponderant evidence that claim 2 would have been obvious over Amit. Our determination here is consistent with the Director's Order indicating that "it appears that Patent Owner has raised a persuasive argument that Amit does not disclose the claimed TDD protocol for communications." Dir. Order 3.

E. Ground 2: Obviousness over Amit and ADSL/VDSL

Petitioner contends that claims 1–17 would have been obvious over the combination of Amit and ADSL/VDSL. Pet. 61–75. Patent Owner presents arguments for patentability for this ground. PO Resp. 58–60.

We do not address claims 1, 4–8, and 10–16 in this section because we did not reach them in the original Final Written Decision and the Director's Order remanding the case to us does not affect our earlier decision that these claims are unpatentable in grounds 3 and 4.

In the following subsections, we address the disclosure of ADSL/VDSL and the parties' contentions regarding whether claims 2, 3,[4] 9, and 17 would have been obvious over the combination of Amit and ADSL/VDSL. For the reasons stated below, we conclude that Petitioner has not demonstrated preponderant evidence that claims 2, 3, 9, and 17, would have been obvious over the combination of Amit and ADSL/VDSL in light of the Director's Order remanding this case to the Board for further consideration.

---

[4] Although the portion of the Final Written Decision relating to claim 3 was not explicitly vacated by the Acting Director, because claim 3 depends from claim 2, it was implicitly vacated. Accordingly, we address it in this Final Written Decision on Remand.

1. ADSL/VDSL (Ex. 1006; Ex. 2017)

ADSL/VDSL is a textbook titled "ADSL/VDSL Principles, A Practical and Precise Study of Asymmetric Digital Subscriber Lines and Very High Speed Digital Subscriber Lines," authored by Dr. Dennis J. Rauschmayer. Exhibit 1006 includes specific pages that Petitioner relies on for its contentions, whereas Patent Owner's Exhibit 2017 includes the entire textbook.

ADSL/VDSL discloses numerous features of communication networks that deliver high-speed data to end users, including discrete multitone modulation ("DMT"), forward error correction ("FEC"), equalization, and time division duplex ("TDD") technologies. *See, e.g.*, *id.* at 1, 166–172 (DMT), 172–181 (FEC), 187–203 (equalization), 295–302 (TDD).

2. Claims 2, 3, 9, and 17

Claim 2 depends from claim 1 and recites "wherein at least one of the communication channels between terminal devices uses time division duplex protocol for communications and the communications are synchronized by broadcasting a beacon message on the network." Claims 9 and 17 recite identical limitations but depend from claims 5 and 10, respectively. Claim 3 depends from claim 2.

Petitioner contends that claims 2, 9, and 17 would have been obvious over the combination of Amit and ADSL/VDSL. Pet. 52–54. Patent Owner disagrees. PO Resp. 49–51. We determine that Petitioner has not presented preponderant evidence that claims 2, 9, and 17 would have been obvious over the combination of Amit and ADSL/VDSL for the reasons that follow.

Petitioner contends that ADSL/VDSL teaches modulation methods including TDD and FDD. Pet. 52 (citing Ex. 1006, 295). Petitioner further asserts that ADSL/VDSL teaches synchronizing communication on a network by broadcasting a beacon message. *Id.* at 53. According to Petitioner, ADSL/VDSL discloses that the sampling clock and the transmitter and receiver must be exactly the same frequency such that they are locked, and that this is done by one end being the master clock and the other end recovering the clock. *Id.* at 53–54 (citing Ex. 1006, 228). Petitioner further asserts that ADSL/VDSL discloses the use of a pilot signal as a beacon signal, and reserves one of the DMT tones for this purpose. *Id.* at 54 (citing Ex. 1006, 225). Petitioner argues that the pilot tones can be used to resolve sample timing at the receiver. *Id.* Petitioner contends that a POSITA thus would have found it obvious to use a TDD communications protocol synchronized by a beacon message. Pet. 54 (citing *id.* § IV.B.2; Ex. 1003 ¶¶ 92–96, 118–120, 194–199).

Patent Owner contends that the combination of Amit and ADSL/VDSL does not teach or suggest the use of beacon messages. PO Resp. 49 (citing Ex. 2007 ¶ 189). Specifically, Patent Owner argues that the DSL pilot tones that Petitioner points to in ADSL/VDSL are not the same as beacon messages. *Id.* at 50. Patent Owner further asserts that Petitioner incorrectly alleges that ADSL/VDSL's DMT is a type of TDD. *Id.*

In addition, Patent Owner argues that Petitioner alleges that ADSL/VDSL's pilot tones are associated with synchronous DMT (SDMT) when instead ADSL/VDSL describes them as related to DMT, a separate protocol, discussed in a different section of the textbook. *Id.* (citing Pet. 53;

Ex. 1006, 76, 86; Ex. 2007 ¶ 193). Patent Owner asserts that SDMT is not synchronized by pilot tone. *Id.* (citing Ex. 1006, 88; Ex. 2007 ¶ 194). Instead, in SDMT, when all signals originate from a common optical network terminal (ONU), a common clock is used. Ex. 1006, 88. When signals do not originate from a common ONU, ADSL/VDSL indicates that synchronization is much more difficult to achieve and does not disclose any way that this could be done. *Id.*

Patent Owner contends that, "even assuming pilot tones were [a] 'beacon message' (which they are not), there is no disclosure of pilot tones being used in SDMT protocol" that Petitioner claims is a form of TDD. PO Resp. 29. Patent Owner asserts that "[n]ormal DMT is not a type of TDD." *Id.* (citing Ex. 2007, 192). Patent Owner further states that "Dr. Acton even admits that DMT protocols do not involve using a beacon message." *Id.* (citing Ex. 2008, 46:25–47:7). Patent Owner argues that, accordingly, Petitioner's contentions fail for claims 2, 9, and 17 and their dependent claims. *Id.* at 51.

We have already determined that, consistent with the Director's Order, Amit does not disclose claims 2, 9, and 17. *See* § II.D.12, *supra*; Dir. Ord. 3. We further agree with Patent Owner that claims 2, 9, and 17 are not taught or suggested by ADSL/VDSL. ADSL/VDSL's mention of pilot tones relates to DMT. Ex. 1006, 228. Petitioner has not shown that such pilot tones are equivalent to beacon messages, nor has Petitioner shown that DMT or SDMT are equivalent to the claimed TDD. Pet. 52–54 (citing Ex. 1006, 225, 228, 295–296, 301; Ex. 1003 ¶¶ 92–96, 118–120, 194–199, 222, 246).

Although Petitioner argues that SDMT employs the same fundamental blocks used in ADSL, and that the SDMT transmitter and receiver is very similar to DMT-based ADSL, these assertions, even if true, do not negate Patent Owner's arguments relating to the claimed TDD. Pet. Reply 23 (citing PO Resp. 50; Ex. 1006, 296). We further disagree with Petitioner's contention that ADSL/VDSL's discussion of the possibility of difficulties in using a common clock for SDMT synchronization would have prompted a POSITA to use pilot tones for this purpose, which is conclusory and not supported by sufficient evidence. *Id.* (citing Ex. 1030 ¶¶ 51–52); PO Sur-Reply 22 (citing Ex. 1030 ¶¶ 51–52).

Furthermore, we agree with Patent Owner that Petitioner has not demonstrated on this record that a pilot tone is equivalent to a beacon message. PO Sur-Reply 22 (citing Pet. Reply 23). We further agree with Patent Owner that ADSL/VDSL's teaching of SDMT does not disclose use of pilot tones, but instead a common clock. *Id.* (citing Ex. 1006, 86).

Claim 3 depends from claim 2 and thus incorporates its limitations. Consequently, our determination for claim 2 applies to claim 3 as well.

Thus, Petitioner has not demonstrated that claims 2, 3, 9, and 17 would have been obvious over the combination of Amit and ADSL/VDSL.

3. Conclusion for Ground 2

Accordingly, we determine that Petitioner has not demonstrated preponderant evidence that claims 2, 3, 9, and 17 are unpatentable as obvious over the combination of Amit and ADSL/VDSL.

F. Ground 3: Obviousness over Amit and Jacobsen

Petitioner contends that claims 1–2, 4–6, 8–10, 12–14, and 16–17 would have been obvious over the combination of Amit and Jacobsen.

Pet. 61–75. Patent Owner argues that these claims are patentable. PO Resp. 16–27 (claim 10), 46–48 (claim 17), 51–58 (claims 1 and 5), 63 (claims 2, 4, 6, 8, and 9).

Pursuant to the Director's Order remanding the case to us, we address the patentability of claims 2, 9, and 17 to consider Patent Owner's as well as Petitioner's contentions. We determine that Petitioner has not demonstrated preponderant evidence that claims 2, 9, and 17 are unpatentable as obvious over the combination of Amit and Jacobsen. The remand does not affect our determinations for the remaining claims challenged in this ground as set forth in the previous Final Written Decision, which we reiterate herein.

1. Amit (Ex. 1005)

Amit is titled "System and Methods for Home Network Communications." Ex. 1005, code (54). Amit purports to provide "a method and system which allows home networking over these coax cables." *Id.* at 2:53–55.

Amit's Figure 2 is shown below.

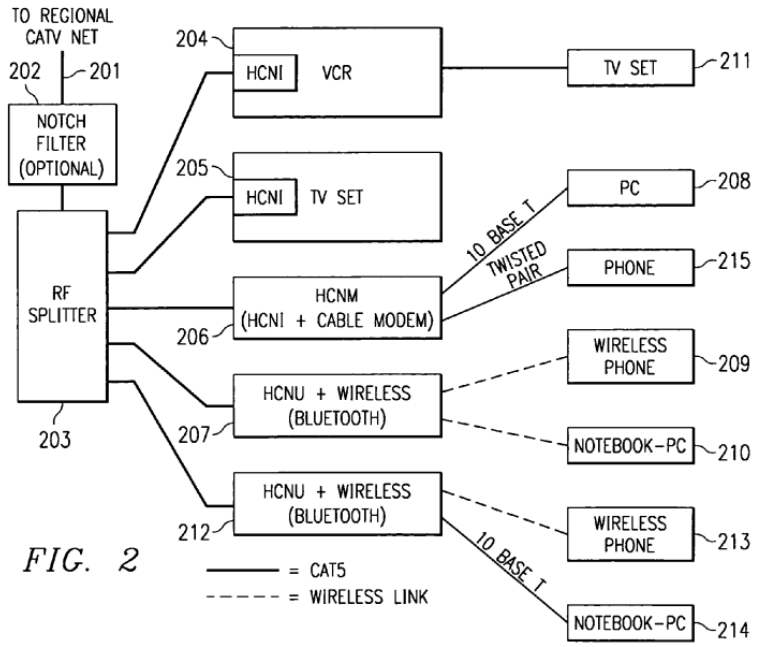

FIG. 2

Amit's Figure 2 shows "a Home Cable networking (HomeCN/HCN)" that has five nodes 204–207, 212 and is connected to a regional CATV plant via cable 201. *Id.* at 2:13–17, 4:23–24, 6:24–26. Notch filter 202 is a band reject filter that does not pass the radio-frequency (RF) range used by the home networking devices 204–207, 212. *Id.* at 6:28–31. The "filter improves the isolation between the home network and other homes as well as the regional network." *Id.* at 6:31–33. Reflection from the notch filter may be used as the main signal under certain circumstances. *Id.* at 14:1–5. The filter can be passive or active. *Id.* at 7:38–39. The filter may be included inside a splitter, or it may be separate and connected to a splitter. *Id.* at 4:30–43.

The notch filter is used at the entrance of a home in the "Single Home operation mode" as distinguished from the "Connected Home operation mode" which does not require the filter. *Id.* at 7:12–35. The filter disconnects the HomeCN from the regional cable network, purportedly leading to a simpler design. *Id.* at 7:16–19.

2. Jacobsen (Ex. 1007)

Jacobsen is an IEEE[5] article titled "An Efficient Digital Modulation Scheme for Multimedia Transmission on the Cable Television Network." Ex. 1007, 8.[6] Jacobsen "present[s] a comparison between the performances of single-carrier modulation with equalization and multicarrier modulation on simulated cable television (CATV) channels." *Id.* Jacobsen states that service providers at the time were investigating "[t]he feasibility of offering high-speed interactive data services to customers on CATV networks or

similar broadband coaxial networks." *Id.* Jacobsen states that "there are several electrical transmission problems that must be overcome before these services can be supplied reliably over CATV networks." *Id.*

Jacobsen recognizes that "[t]aps, amplifiers, and splitters can all cause signals to be reflected at their insertion points." *Id.* Jacobsen states that these reflections can produce "[v]ariations in a channel's frequency response caus[ing] successively transmitted symbols to interfere with one another, an effect known as intersymbol interference (ISI)." *Id.*

Jacobsen teaches that multicarrier modulation may be used to combat ISI. *Id.* at 11. Jacobsen states that "bits are originally assigned to subchannels just after training during system initialization in direct proportion to the subchannel signal-to-noise ratios." *Id.* at 10. "As a result, subchannels that suffer from little attenuation and/or little noise carry the most bits, while subchannels that are severely attenuated and/or very noisy might not carry any bits." *Id.*

3. Jacobsen's Status As Prior Art

"A reference is deemed publicly available if it has been 'disseminated or otherwise made available to the extent that persons interested and ordinarily skilled in the subject matter or art, exercising reasonable diligence, can locate it.'" *Telefonaktiebolaget LM Ericsson v. TCL Corp.*, 941 F.3d 1341, 1346 (Fed. Cir. 2019) (citing *Jazz Pharm., Inc. v. Amneal Pharm., LLC*, 895 F.3d 1347, 1355 (Fed. Cir. 2018)). "Because there are many ways in which a reference may be disseminated to the interested public, 'public accessibility' has been called the touchstone in determining whether a reference constitutes a 'printed publication.'" *In re Hall*, 781 F.2d 897, 898–99 (Fed. Cir. 1986).

The ’249 patent issued from U.S. Patent Application 09/910,412 filed July 21, 2001. Ex. 1001, codes 21, 22. The ’249 patent claims priority to U.S. Provisional Application 60/288,967 filed May 4, 2001. Ex. 1001, code (60).

Petitioner contends that Jacobsen was published in 1994, more than one year before the ’249 patent’s priority date of May 4, 2001, and is thus prior art under § 102(b). Pet. 2, 61 (citing Ex. 1007, 305; Ex. 1022 ¶¶ 10–13). As support for its assertion, Petitioner relies on the declaration of June Munford, a librarian. Ex. 1022 ¶¶ 1–3. She states that she retrieved a Machine-Readable Catalog (“MARC”) record for the Jacobsen reference from the Linda Hall Library indicating that it was included in a 1994 edition of National Cable Television Association Technical Papers. *Id.* ¶¶ 4, 11–12. She further states that the “008 field” of the MARC record indicates that Linda Hall Library first acquired the Jacobsen on September 19, 1995 and that it was made available to the public “shortly after” this date. *Id.* ¶ 13.

Patent Owner argues that Ms. Munford has training in information science and asserts that a POSITA without that training would not have been able to locate Jacobsen. Resp. 25 (citing Ex. 2010, 11:4–7; Ex. 2008, 101:9–13; Ex. 2007 ¶ 197; *Blue Calypso, LLC v. Groupon, Inc.*, 815 F.3d 1331, 1348 (Fed. Cir. 2016)). Patent Owner further argues that Dr. Acton did not offer any opinions on the public availability of Jacobsen, and that there is no testimony that any POSITA would know how to use MARC records. *Id.* (citing *Voter Verified, Inc. v. Premier Election Sols., Inc.*, 698 F.3d 1374, 1380 (Fed. Cir. 2012)).

Petitioner replies that Patent Owner’s expert knew of Jacobsen from his work in the industry. Pet. Reply 13 (citing Ex. 1029, 52:10–55:1).

Petitioner further submits that Ms. Munford confirmed in her second declaration that Jacobsen was publicly accessible before the '249 patent's priority date. *Id.* (citing Ex. 1031 ¶¶ 3–18; *VidStream LLC v. Twitter, Inc.*, 981 F.3d 1060, 1065–67 (Fed. Cir. 2020)).

Patent Owner responds that neither the Reply nor Ms. Munford have provided any evidence that a POSITA would have been able to identify and locate Jacobsen. PO Sur-Reply 11–12. Patent Owner argues that Ms. Munford's testimony confirms that MARC records are editable and do not explicitly indicate when a periodical is made available, and that Ms. Munford did not, and cannot, offer an opinion from the perspective of a POSITA because she is not aware of what that means in the context of this proceeding. *Id.* at 12 (citing Ex. 2020, 10:5–8, 10:13–22, 22:7–21, 25:23–26:7, 23:17–26:19). Patent Owner further argues that Patent Owner's expert's awareness of Jacobsen does not establish that it is prior art. PO Sur-Reply 12 (citing Reply 13).

On this record, we find that Petitioner has shown by a preponderance of the evidence that Jacobsen was publicly accessible more than one year before the '249 patent. Jacobsen is thus § 102(b) prior art.

By its own terms, Jacobsen indicates that it is one of the National Cable Television Association ("NCTA") 1994 Technical Papers related to the 43rd Annual NCTA Convention and Exposition, New Orleans, Louisiana, May 22–25, 1994. Ex. 1007, 1–3, 6. This event and related papers address topics that would have interested persons in the field as we define their skill level. *See* § II.B, *supra*. The listing of Jacobsen as one of the papers covered in the event schedule suggests that POSITAs attending this event would have known of and had access to Jacobsen. Ex. 1007, 2–3. In fact,

Mr. Bates, Patent Owner's own expert witness, who was at least a person having ordinary skill in the art, testified that he was aware of Dr. Jacobsen's work in the late 1990s, well before the priority date. *See* Ex. 1029, 52:10–55:1. Therefore, a person having ordinary skill in the art would have known of Jacobsen before the priority date. *See Nobel Biocare Servs. AG v. Instradent USA, Inc.*, 903 F.3d 1365 (Fed. Cir. 2018) (holding that a catalog distributed at a conference was a printed publication); *In re Klopfenstein*, 380 F.3d 1345 (Fed. Cir. 2004) (holding a slide presentation at a conference was a printed publication); *Mass. Inst. of Tech. v. AB Fortia*, 774, F.2d 1104 (Fed. Cir. 1985) (holding that a paper disseminated to six people of ordinary skill in the art and discussed with between 50 and 500 people skilled in the art was a printed publication).

The evidence further demonstrates that Jacobsen was acquired by the Linda Hall Library, Kansas City, Missouri, on September 19, 1995 and made available to the public shortly afterward. Ex. 1022 ¶¶ 4–5, 13; Ex. 1031 ¶¶ 7, 17. Availability to interested persons more than one year before the '249 patent is corroborated by other publications of Jacobsen, as well as Dr. Acton's testimony. Ex. 1022 ¶¶ 10–13; Ex. 1031 ¶¶ 10–12, 16–17; Ex. 1003 ¶ 247.

We do not agree with Patent Owner's arguments against Jacobsen. There is no requirement in the law for Ms. Munford to be an interested person or POSITA in order for her to testify about how the Linda Hall Library acquired and cataloged Jacobsen so that interested persons would be able to access it. Her testimony relates to the public accessibility of Jacobsen, not its technical content. *See, e.g.*, Ex. 1031 ¶ 6. She need not qualify as a POSITA to offer this testimony.

Ms. Munford further testified that MARC records are used by the public to discover materials within a library's collection, and that library users, which would include interested persons and POSITAs, do not require knowledge of how MARC records are maintained in order to use them. Ex. 1031 ¶ 8.

And even if MARC records are editable, as Patent Owner argues, Patent Owner has not shown that the MARC record for Jacobsen was altered, and Ms. Munford states that such an alteration would have been unusual practice for a library. Ex. 1022 ¶ 4; Ex. 1031 ¶ 14.

Accordingly, Petitioner has shown by a preponderance of the evidence that Jacobsen was publicly accessible to interested persons more than one year before the '249 patent. It is thus § 102(b) prior art.

4. Motivation to Combine Amit and Jacobsen

Petitioner contends that a POSITA would have modified "Amit's coaxial home network by incorporating Jacobsen's techniques for multimedia transmission on CATV networks, including modulation and equalization." Pet. 62. For reasons explained in this section, we determine that Petitioner has shown by a preponderance of the evidence that a POSITA would have combined Amit and Jacobsen.

Petitioner contends that the need for high-speed interactive data services drives the implementation of broadband coaxial networks. Pet. 62 (citing *id.* §§ IV.A.1, IV.C.1; Ex. 1003 ¶¶ 253–270). According to Petitioner, Amit teaches that quadrature amplitude modulation (QAM) and quadrature phase-shift keying (QPSK) can support high bandwidth rates. Pet. 64 (citing Ex. 1005, 25:1–7, 25:9–10). Petitioner further observes that

Jacobsen teaches single-carrier QAM with equalization and multicarrier modulation. *Id.* (citing Ex. 1007, 9–10).

Starting with Amit's terminal devices using QAM modulation, Petitioner contends that a POSITA would have been motivated to apply Jacobsen's teachings to arrive at a single carrier QAM modulation with equalization or multicarrier modulation with subchannels having their own QAM constellation. *Id.* According to Petitioner, Amit uses reflections to communicate between devices, but recognizes there may be a problem with reflections, requiring compensation for variations in a channel's frequency response. *Id.* at 64–65 (citing Ex. 1005, 3:19–25, 20:42–43; Ex. 1007, 8).

Petitioner asserts that "[a] POSITA would have thus been motivated to use Jacobsen's modulation teachings with Amit's terminal devices to improve the QAM modulation and the bit rate." *Id.* at 65.

Petitioner further contends that a POSITA would have been motivated to increase the capabilities of Amit's terminal devices by adding Jacobsen's equalizers. *Id.* (citing Ex. 1003 ¶¶ 261–265). According to Petitioner, equalizers reduce inter-symbol interference (ISI) caused by signal reflections to improve system performance. *Id.* at 65–66 (citing Ex. 1005, 8:30–32, 9:56, 19:32–37; Ex. 1007, 8–9).

With respect to claim 1 and claim 5, Patent Owner argues that Amit uses a single carrier, and a POSITA would not have been motivated to implement Jacobsen's multicarrier modulation in Amit. PO Resp. 52–56. Patent Owner asserts that Amit's Single Home embodiment and Connected Home embodiment each use a single carrier. *Id.* at 52 (citing Ex. 1005, 7:16–17, 8:30–32, 8:45–49, 24:12–67, 26:1–10, 26:15–67; Ex. 2007 ¶¶ 128, 130). Patent Owner contends that the bandwidth and hardware limitations of

Amit's Single Home embodiment are incompatible with a multicarrier system, and their replacement with a multicarrier system would not have been possible, practical, or consistent with Amit's goal of providing a simple system. *Id.* at 52–53 (citing Ex. 1005, 8:20–30; Ex. 2007 ¶¶ 136, 139–141). Patent Owner argues that the additional complexity of modifying Amit to support multicarrier modulation (such as the addition of FFT and IFFT operations) would have outweighed any benefits gained. *Id.* at 53–55 (citing Ex. 1005, 5:51, 7:16–22, 8:47–49, 18:24–44, 18:65–67, 26:13–14, Figs. 18–19; Ex. 1007, 9; Ex. 2007 ¶¶ 81–82, 137–138, 140; Ex. 2018 ¶ 3). Patent Owner argues that Petitioner fails to acknowledge or consider drawbacks, difficulties, or modifications necessary to implement multicarrier modulation. *Id.* at 55 (citing Ex. 2015 ¶ 2; Ex. 2007 ¶¶ 142–143; Ex. 1003 ¶¶ 267, 269).

Petitioner replies that Amit is not limited to single-carrier modulation. Pet. Reply 24–26. Petitioner contends that Amit's HCNM modem uses different frequencies for its subchannels, and improving bit rate would have led a POSITA to apply multicarrier modulation to terminal devices in Amit's home network. *Id.* at 24 (citing Ex. 1005, 15:18–28; Inst. Dec. 21).

Petitioner further asserts that Patent Owner's arguments import numerous claim requirements in an attempt to differentiate the prior art. PO Resp. 24. Petitioner observes that claims 1 and 5 of the '249 patent do not require allocation of channels to devices (as opposed to the home network in general), nor do they specify a minimum bandwidth per channel. *Id.*

Petitioner further argues that Patent Owner's complexity arguments misapprehend the relevant technology and Jacobsen's teaching that multicarrier modulation is at least 2.5 times less complex than single carrier

modulation with equalization, so adding FFT/IFFT would not require an increase in complexity. *Id.* at 24–25 (citing Ex. 1007, 9, 12 n.4, 13). Petitioner further contends that Petitioner's expert, Mr. Bates, mistakenly thought that an FFT/IFFT requires a special chip to be added to any terminal device and that modern laptops are incapable of performing FFTs. *Id.* at 25 (citing Ex. 1029, 96:20–97:8, 97:23–98:9; Ex. 1030 ¶¶ 53–58; Exs. 1034, 1036, 1038–1041). In addition, Petitioner contends that Mr. Bates improperly focused on whether a typical end user, not a POSITA, would have been capable of implementing multicarrier modulation. *Id.* at 25–26 (citing Ex. 1029, 162:6–20, 164:8–25).

Patent Owner replies that Petitioner improperly conflates multichannel communication with multicarrier communication. PO Sur-Reply 6–7. Patent Owner asserts that multichannel communications use different frequency channels as independent communication channels whereas multicarrier communications use multiple subcarriers to provide communications of a single channel. *Id.* at 6 (citing Ex. 1006, 28; Ex. 2019, 17:11–15).

Patent Owner further argues that Petitioner relies on FDM as the basis for OFDM, but asserts FDM is not a type of multicarrier modulation and is not even possible in Amit's Single Home operation mode. *Id.* at 6–7 (citing Ex. 1005, 8:45–46; Ex. 1029, 156:24–157:1; Ex. 2007 ¶¶ 128–129).

We do not agree with Patent Owner that Amit is restricted to "single frequency" modulation. PO Resp. 52–56. As Petitioner notes, Amit describes that its HCNM modem uses a channel (e.g., DOCSIS) containing two sub-channels for upstream and downstream signals. Pet. 24 (citing Ex. 1005, 15:18–28). This meets Patent Owner's definition for multicarrier

communications as multiple subcarriers to provide communications of a single channel. PO Sur-Reply 6. We further note that the claims do not recite "multicarrier communications" so the distinction Patent Owner attempts to draw is not supported by commensurate language in the claims. See *In re Self*, 671 F.2d 1344, 1348 (CCPA 1982) (limitations not appearing in a claim cannot be relied upon for patentability).

Furthermore, even if Amit were restricted to single carrier modulation, as Patent Owner argues, Petitioner relies on Jacobsen for its teaching of multicarrier modulation. Pet. 62–66; PO Resp. 52–56. In essence, Patent Owner attacks Amit individually and does not properly consider how a POSITA would have understood the combined teachings of Amit and Jacobsen. "Non-obviousness cannot be established by attacking references individually where the [challenge] is based upon the teachings of a combination of references." *In re Merck & Co.*, 800 F.2d 1091, 1097 (Fed. Cir. 1986) (citing *In re Keller*, 642 F.2d 413, 425 (CCPA 1981)).

With respect to claim 10, Patent Owner argues that Jacobsen teaches away from adding equalization to Amit's teachings. PO Resp. 16–17. Specifically, Patent Owner asserts that Jacobsen prefers multi-carrier transmissions without equalization over single-carrier transmissions with equalization because the former has similar performance but less complexity. *Id.* at 17–18 (citing Ex. 1007, 8–10, 13; Ex. 2007 ¶ 199). Patent Owner asserts that a POSITA thus would have considered adding equalization unnecessary. *Id.* at 18.

Petitioner indicates, however, that Jacobsen describes that smaller Fast Fourier Transform (FFT) size can be used with a time-domain equalizer to reduce the required length of the cyclic prefix in exchange for increased

system complexity. Pet. 69–70 (citing Ex. 1007, 12, n.4; Ex. 1003 ¶¶ 287–296). According to Petitioner, one goal of Jacobsen's multicarrier system is to minimize the amount of each block wasted by transmitting the cyclic prefix, and a POSITA would thus be motivated to add equalization to reduce the cyclic prefix's length. Pet. Reply 6 (citing Ex. 1007, 9; Ex. 1030 ¶¶ 16–24; Exs. 1033–1035).

Although we agreed with Patent Owner in the Institution Decision (Inst. Dec. 38) that that Jacobsen teaches that multicarrier modulation performs better "by some measures under some circumstances" than single carrier modulation with equalization, Petitioner has shown that Jacobsen's footnote 4 teaches that multi-carrier modulation and equalization provide the benefit of reducing the FFT size and cyclic prefix length in exchange for an increase in system complexity. Ex. 1007, 12, n.4[7]; *see also* Pet. 69–70; Pet. Reply 6. Accordingly, further review of Jacobsen leads us to conclude that Jacobsen does not teach away from using multicarrier modulation with equalization in Amit under circumstances in which reducing FFT size and cyclic prefix length outweighs the complexity of adding an equalizer. PO Resp. 16–18.

Even if Jacobsen's teachings indicate a preference for multicarrier modulation over single carrier modulation with equalization, "[a] reference does not teach away [] if it merely expresses a general preference for an alternative invention but does not criticize, discredit, or otherwise discourage investigation into the invention claimed." *Galderma Lab'ys, L.P. v.*

[7] Although Petitioner cited footnote 4 in its Petition (Pet. 69–70), we did not specifically address it in our Institution Decision. *See* Inst. Dec. 40.

Tolmar, Inc., 737 F.3d 731, 738 (Fed. Cir. 2013) (quoting *DePuy Spine, Inc. v. Medtronic Sofamor Danek, Inc.*, 567 F.3d 1314, 1327 (Fed. Cir. 2009)).

Patent Owner argues that adding equalization to Amit's single carrier system would have been contrary to Amit's goal of being "simple" and Petitioner allegedly provided no articulated basis to add Jacobsen's equalization. PO Resp. 18–19 (citing Ex. 1005, 7:16–22, 18:32, 26:13–14; Ex. 1007, 15; Ex. 2007 ¶ 199).

Petitioner responds that "weighing the benefits [a POSITA] would not write-off all equalization as prohibitively complex" especially when Jacobsen expressly teaches the use of multicarrier modulation with equalization. Pet. Reply 7 (citing Ex. 1007, 12, n.4; Ex. 1030 ¶¶ 16–24; Ex. 1032–1035; *Winner Int'l Royalty Corp. v. Wang*, 202 F.3d 1340, 1349 n.8 (Fed. Cir. 2000)). We agree with Petitioner that Jacobsen teaches that multicarrier modulation with equalization would be useful in some circumstances to reduce FFT size and reduce cyclic prefix length even though it introduces the added complexity of an equalizer. Ex. 1007, 12, n.4. Jacobsen would not have mentioned multicarrier modulation with equalization if it were not beneficial in appropriate circumstances.

Patent Owner further argues that the Petition's basis for including an equalizer is to overcome sub-ideal channel conditions caused by inter-symbol interference ("ISI"). PO Resp. 19 (citing Pet. 66). Patent Owner asserts that Amit already accounts for ISI using a transponder in the two-frequency mode, and there is no reason to add an equalizer to address a problem that Amit already solved. PO Resp. 19 (citing *id.* § V.A.2); PO Sur-Reply 16–17 (citing Pet. 63; Ex. 1005, 20:42–43); PO Sur-Reply 12–16 (citing Inst. Dec. 38–39; PO Resp. 20–21; Pet. Reply 7, 11–12, 25;

Ex. 1005, 7:29–30, 13:55–14:6, 20:26–31; Ex. 1007, 8, 12 n. 4, 13–15; Ex. 2007 ¶¶ 98, 180–183; Ex. 2019, 22:12–23:19, 26:8–15, 44:8–14; Ex. 1029, 32:15–17, 33:3–25, 204:10–11; Ex. 1030 ¶ 18; Ex. 1032 ¶¶ 16–24).

In reply, Petitioner noted that Jacobsen teaches that an equalizer can be used to reduce ISI, that a portion of every block transmitted is wasted by inclusion of a cyclic prefix, and that both experts agreed that a system designer would look to equalization for any network experiencing reflections. Pet. Reply 6–7 (citing Ex. 1007, 9, 12 n.4; Ex. 1029, 32:15–17; Ex. 1003 ¶ 184).

We find no mention in Amit that its transponder operating in two-frequency mode entirely solves the problem of ISI, and that no further improvement would be expected through the addition of an equalizer to a multicarrier system, as Jacobsen teaches. Ex. 1005, 20:42–43; Ex. 1007, 9, 12 n.4. We agree with Petitioner that the experts recognize that a POSITA would have looked to equalization to address ISI caused by reflections. Ex. 1003 ¶ 184; Ex. 1029, 32:15–17.

Patent Owner argues that Petitioner's combination fails because it ignores claim 10's requirement that equalization is performed by "terminal devices." PO Resp. 19–20 (citing Pet. 69–71; Ex. 1007, 10; Ex. 2007 ¶ 200). Patent Owner asserts that Petitioner's arguments for why a POSITA would add equalization into Amit amount to nothing more than "equalization existed" which is insufficient. *Id.* at 19–20 (citing *Virtek Vision Int'l ULC v. Assembly Guidance Sys., Inc.*, 97 F.4th 882, 887 (Fed. Cir. 2024); *Polaris Indus., Inc. v. Arctic Cat, Inc.*, 882 F.3d 1056, 1068 (Fed. Cir. 2018)).

We do not agree with Patent Owner's argument. Jacobsen models "only the portion of the cable system that is nearest to subscriber homes" "[b]ecause most of the degradations to CATV signals are caused by 'leaky' hardware in subscriber drops." Ex. 1007, 10. Hence, we find that the transmitters and receivers that Jacobsen discusses are located in home terminal devices as well as the CMTS or headend. A POSITA would consider Jacobsen's teachings of equalization in a receiver to apply to home terminal devices such as cable modems. Pet. 71 (citing Ex. 1007, 9); Pet. Reply 8 (citing Ex. 1007, 8, 14).

Patent Owner next argues that Jacobsen's wide-area network ("WAN") would not motivate any changes to Amit's local area network ("LAN"). PO Resp. 20–21. Patent Owner further argues that Amit includes two mutually exclusive embodiments—the Single Home mode that uses a notch filter to disconnect the home network from the regional network, and the Connected Home mode which connects the home network to the regional network. PO Sur-Reply 3–5 (citing Pet. Reply 3–5; Ex. 1005, 2:56–58, 7:12–14, 7:16–19, 7:25–35, 7:51–52, 8:47–49; PO Resp. 10–13; Ex. 2007 ¶¶ 92–94, 131–135; Ex. 1029, 170:16–18). Patent Owner argues that a POSITA would not have attempted to modify or improve Amit's Single Home LAN with Jacobsen's teachings about regional networks because they have different challenges, such as different amounts and sources of interference. PO Resp. 21 (citing *id.* § V.A.3; Ex. 1006, 6; Ex. 1007, 10; Ex. 2009, 15).

We do not think that a POSITA would have considered Amit to teach against using a notch filter with its Connected Home mode. For example, Amit discloses that "the use of such a filter is *optional*, as *we believe* that the

disclosed system and method is functional with the isolation levels of the CATV network without the additional notch filtering." Ex. 1005, 6:33–36 (emphasis added). Amit further states that the notch filter is required for Single Home mode, but that the Connected Home mode "does not *require*" a notch filter. Ex. 1005, 7:24–35. Amit thus teaches that the notch filter may not be required in Connected Home mode but does not go so far as stating it would never be needed or beneficial to include in the home network.

Furthermore, Amit's notch filter and terminal devices, such as its HCNM modem, are connected between the regional network and home network and thus are subject to the challenges facing both networks, including the types of interference they experience. Pet. Reply 8–10 (citing Inst. Dec. 23–24); Ex. 1005, 6:29–33, 7:16–19, 15:18–50, Figs. 2, 7; Ex. 1030 ¶¶ 25–28). Similarly, Jacobsen's transmitters and receivers would be located at the headend or CMTS and the terminal devices of the home network. Ex. 1007, 10, Figs. 1, 2. Thus, we do not agree with Patent Owner's assertions that Amit's teachings are confined to home networks, and Jacobsen's to regional networks, because the HCNM modem is the interface between the two.

Patent Owner further argues that a POSITA would not seek to reduce signal interference in Amit with Jacobsen's teachings because Amit allegedly already addresses this issue. PO Resp. 22–24. Specifically, Patent Owner contends that Jacobsen teaches to use a band of frequencies (30–36 MHz) subject to interference from ham radio whereas Amit's in-home network uses different frequency bands (900 to 960 MHz) that were intentionally selected to avoid external interference. *Id.* at 22–23 (citing

Ex. 2007 ¶ 203; Ex. 1005, 3:24–30, 8:20–30; Ex. 1007, 8–10; Ex. 2007 ¶¶ 204–206; Ex. 2008, 98:18–99:1; Pet. 63).

We agree with Petitioner that a POSITA would have been motivated to apply Jacobsen's multicarrier modulation in Amit to mitigate interference from external signals. Pet. Reply 10–11 (citing Ex. 1007, 9; Ex. 1030 ¶¶ 29–33). Jacobsen teaches that an amateur radio (ham) signal is but one example of an external signal that can cause degradation of a cable television (CATV) signal. Ex. 1007, 9. Furthermore, Jacobsen teaches that the "spectral location . . . of ham interferers can vary" which suggests that interferers are not limited to the specific frequencies that Patent Owner discusses. *Id.*

Patent Owner argues that Amit's transponder and dual-frequency mode eliminates the echo problem that exists in homes. PO Resp. 23–24 (citing Ex. 1005, 8:4–12, 20:15–17, 20:26–31; Ex. 2008, 70:16–19, 93:12–94:8, 118:3–14; Ex. 2007 ¶¶ 180–183). Patent Owner asserts that a POSITA would have had no reason to look for other solutions to the ISI problem than the one that Amit already provides, and that any argument to modify Amit with Jacobsen is based on hindsight. *Id.* at 24 (citing Ex. 2007 ¶¶ 98, 207).

Petitioner contends that Patent Owner cherry-picks statements from an Amit embodiment that Petitioner's combination does not rely upon. Pet. Reply 11–13. Specifically, Petitioner states that Amit discusses multiple types of interference that may arise in LAN configurations, but Patent Owner only focuses on an embodiment with a transponder at the entrance to a home that changes the upstream signal frequency to the downstream signal frequency and transmits it back to the home. *Id.* at 11–12 (citing Ex. 1005, 20:15–31). According to Petitioner, this embodiment,

illustrated in Amit's Figure 20, contains no notch filter and thus was not cited by the Petition. *Id.* at 12. Petitioner avers that, instead, the Petition relies on Amit's other configurations that use notch filter reflection as the main signal. *Id.* at 12 (citing Pet. 13; Ex. 1005, 13:43–14:5).

Since Patent Owner's argument is directed toward an embodiment of Amit that Petitioner did not assert in its combination of Amit and Jacobsen, Patent Owner's argument is unavailing.

Thus, for the foregoing reasons, Patent Owner's arguments do not undermine Petitioner's showing of a motivation to combine. Petitioner shows by a preponderance of the evidence that a POSITA would have been motivated to use Jacobsen's modulation teachings with Amit's terminal devices to improve upon the QAM modulation and bit rate consistent with the market demand for faster interactive data services. Pet. 62 (citing Ex. 1003 ¶ 260). *See KSR*, 550 U.S. at 418 (reason to combine known elements may be established by "the effects of demands known to the design community or present in the marketplace").

5. Reasonable Expectation of Success

Petitioner contends that a POSITA would have had a reasonable expectation of success in combining the teachings of Amit and Jacobsen. Pet. 67 (citing Ex. 1003 ¶¶ 266–270; Ex. 1020; Ex. 1021). Petitioner's expert, Dr. Acton, states that the references address QAM modulation of a channel, and Jacobsen "builds upon" and improves Amit's QAM teachings through single carrier modulation with equalization or multicarrier (OFDM) modulation to deliver high-speed data over a coaxial network, such that the combination would have yielded predictable results. Ex. 1003 ¶ 266 (citing Ex. 1007, 8–9), ¶ 267 (citing Ex. 1005, 8:30–33, 25:1–10; Ex. 1020, 142–

151; Ex. 1021, 481–486), 270. Dr. Acton contends that it would have been "straightforward" for a POSITA to implement QAM and OFDM because they are taught in a variety of engineering, science, and math courses that a POSITA would have taken, and because they are well-known in the art. *Id.* ¶¶ 267, 269 (citing Ex. 1005, 8:30–32, 9:56, 19:32–37; Ex. 1007, 9).

Patent Owner argues that Petitioner's expert, Dr. Acton, relied on the presence of QAM in the prior art references for the motivation to combine and reasonable expectation of success. PO Resp. 7 (citing Ex. 1003 ¶¶ 108–109, 122, 125, 259–260, 266–267, 270, 337, 350, 353; Ex. 1007 ¶¶ 59, 175; Ex. 2008, 58:20–23, 59:8–17, 60:12–23, 73:5–74:4). Patent Owner asserts that QAM is a widespread, generic technology, and that Dr. Acton failed to consider the principles of operation that would apply to the specific medium of communication, including differences between twisted pair wiring and coaxial cable. *Id.* Patent Owner further argues that Petitioner fails to acknowledge or consider drawbacks, difficulties, and/or modifications necessary to implement multicarrier modulation such as OFDM, including timing difficulties. PO Resp. 55 (citing Ex. 2015 ¶ 2; Ex. 2007 ¶¶ 142–143; Ex. 1003 ¶¶ 267, 269).

Petitioner replies that a POSITA would have considered using known techniques such as OFDM, equalization, and TDD. Pet. Reply 1. Petitioner argues that Patent Owner's expert, Mr. Bates, acknowledged that broadband LANs used OFDM as early as the 1990s, that OFDM is "cable agnostic," and that OFDM was used on coaxial cable networks before it was used on DSL networks with twisted pair wiring. *Id.* at 1–2 (citing Ex. 1029. 23:1–5, 32:15–17, 50:9–11, 65:6–8, 90:5–7, 92:23–93:2, 136:19–22, 156:5–9). Petitioner asserts that a POSITA would have applied long-known techniques

such as QAM and OFDM in LANs and WANs, whether they used coaxial or twisted pair. *Id.* at 2 (citing Ex. 1030 ¶¶ 7–18; Ex. 1042; Pet. 27–36, 62–67, 75–81).

We agree with Petitioner that a POSITA would have had a reasonable expectation of success in combining Amit and Jacobsen. Pet. 67. The evidence establishes that QAM modulation and multicarrier modulation (such as DMT and OFDM) were well-known in the art and had been applied to both coaxial cable and twisted pair media, in both LANs and WANs. Ex. 1003 ¶¶ 266–269; Ex. 1030 ¶¶ 7–8.

Although Patent Owner asserts that Petitioner failed to acknowledge the "drawbacks, difficulties, and/or modifications" required to implement multicarrier modulation such as OFDM, Petitioner recognizes that Jacobsen teaches that multicarrier modulation and single carrier modulation with equalization may be used to compensate for variations in a channel's frequency response due to signal reflections or multipath effects which cause ISI. PO Resp. 7, 55; Pet. 65 (citing Ex. 1007, 8); *see also* Ex. 1003 ¶ 266 (citing Ex. 1007, 8–9), ¶ 267 (citing Ex. 1005, 8:30–33, 25:1–10; Ex. 1020, 142–151; Ex. 1021, 481–486), 270. Petitioner further relied on Jacobsen's teaching that multicarrier modulation alleviates problems caused by "interferers" (i.e., external signals). Pet. 72–73 (citing Ex. 1007, 9).

We further agree with Petitioner that a POSITA would have been familiar with QAM and multicarrier modulation such as DMT and OFDM through college courses that the POSITA would have taken, as well as textbooks that the POSITA would have studied. *Id.* at 67 (citing Ex. 1005, 8:30–32, 9:56, 19:32–37; Ex. 1007, 9; Ex. 1003 ¶¶ 266–270).

Thus, Petitioner has shown by a preponderance of the evidence that a POSITA would have had a reasonable expectation of success in combining Amit and Jacobsen.

1. Claim 1

Petitioner relies on its ground 1 mapping of Amit to the limitations of claim 1, except for limitation 1.c.iii, for which it supplements Amit with Jacobsen's teachings. Pet. 9–25, 67–69 (citing Ex. 1003 ¶¶ 271–285). We address Petitioner's mapping and Patent Owner's arguments for patentability below. Patent Owner argues that the combination of Amit and Jacobsen fails to disclose use of a signal-to-noise ratio (SNR) recited in limitation 1.c.iii. We will address Patent Owner's argument in the sub-section below addressing limitation 1.c.iii. Patent Owner does not dispute Petitioner's contentions that the other limitations of claim 1 are taught by Amit.

2. Limitation 1.pre: Signal Distribution Network

The preamble of claim 1 recites a "signal distribution network comprising."

Petitioner contends that Amit discloses or renders obvious a "signal distribution network" as recited in the preamble of claim 1. Pet. 9–10. Specifically, Petitioner states

> Amit "provides a system and methods for communication between subscribers' devices over cable infrastructure designed to carry video signals," including "home networking solutions that utilize in-home TV wiring for supplying high rate connectivity between any two home networking nodes." [Ex. 1005, 2:34–46]. Exemplary signal distribution networks are depicted in Figures 2 and 7.

Pet. 9 (citing Ex. 1005, 2:34–46, 5:22–31).

Patent Owner does not dispute Petitioner's contentions.

We find that Petitioner has shown by a preponderance of the evidence that Amit discloses claim 1's preamble. Consequently, we do not address whether the preamble is limiting.

3. Limitation 1.a: Filter

Limitation 1.a recites "a filter located at the point of entry of a building tuned to reject network signals originating in the building, such that the network signals originating in the building do not pass through the filter, but rather are reflected back into the building."

Petitioner contends that Amit discloses or renders obvious limitation 1.a. Pet. 10–14 (citing Ex. 1003 ¶¶ 48–55). Petitioner provides an annotated version of Amit's Figure 2 below. Pet. 12.

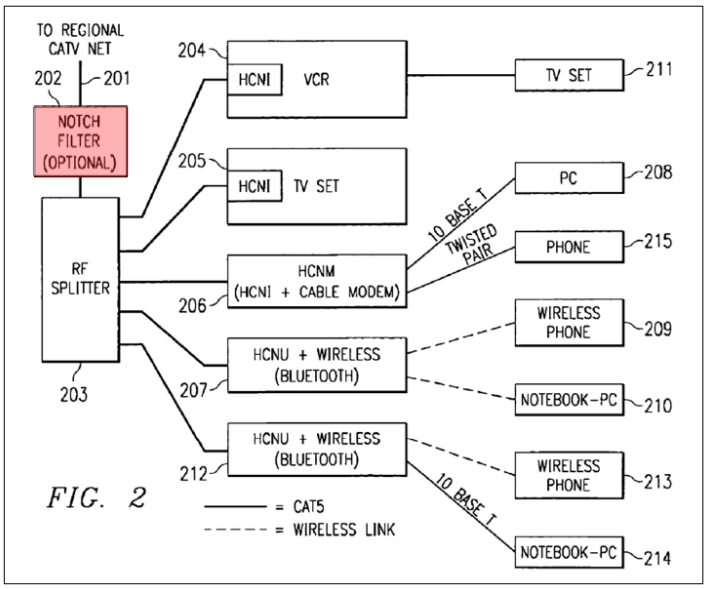

FIG. 2

Petitioner annotates Amit's Figure 2 above to highlight the notch filter (red). Petitioner states that this feature of the claimed invention is disclosed, for example, in the following passage of Amit:

> In this "Single Home operation mode . . . a notch filter should be added . . . at the flat/single home entrance," enabling "notch filter reflection," wherein the filter rejects and reflects signals originating in the building such that they do not pass through

> the filter, allowing the same frequency range to be used by multiple households.

Pet. 11–12 (citing Ex. 1005, 3:33–35, 13:31–45, Fig. 2). Petitioner further states that Amit discloses that two modems in the same flat can communicate by echo from the notch filter. Pet. 14 (citing Ex. 1005, 13:65–67, 14:8–65).

Patent Owner does not dispute Petitioner's contentions.

We find that Petitioner has shown by a preponderance of the evidence that limitation 1.a is disclosed by Amit's notch filter located at the entrance of a flat or home.

4. Limitation 1.b.i: Signal Splitter

Limitation 1.b.i recites "at least one signal splitter."

Petitioner contends that Amit discloses or renders obvious limitation 1.b.i. Pet. 14–16 (citing Ex. 1003 ¶¶ 56–59). Petitioner provides the following annotated version of Amit's Figure 2 to show this feature. Pet. 15.

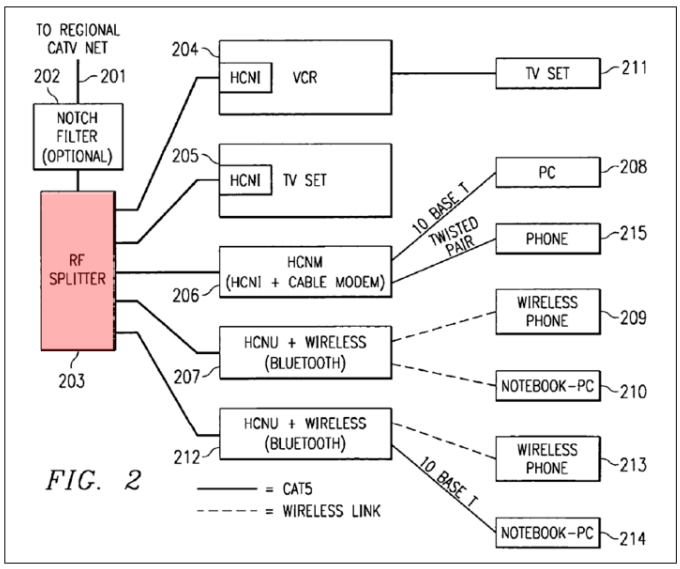

FIG. 2

Petitioner annotates Amit's Figure 2 above to highlight RF splitter 203 (red). For example, Petitioner asserts that Amit discloses that "RF splitter [203] splits the signal coming from and to the regional CATV plant [201], to the signals coming to and from units [204–207, 212] respectively." *Id.* at 14 (citing Ex. 1005, 6:36–39). Petitioner further contends that Amit's Figure 7 discloses two splitters 705, 706. *Id.* (citing Ex. 1005, 5:31).

Patent Owner does not dispute Petitioner's contentions concerning this limitation.

We find that Petitioner has shown by a preponderance of the evidence that limitation 1.b.i is disclosed by Amit's splitters.

5. Limitation 1.b.ii: Splitter Ports

Limitation 1.b.ii recites "the signal splitter having a common port and a plurality of tap ports, the common port of the signal splitter being coupled to the filter."

Petitioner contends that Amit discloses or renders obvious limitation 1.b.ii. Pet. 16–20 (Ex. 1003 ¶¶ 60–67). Petitioner provides an annotated version of Amit's Figure 2, shown below, to explain its contentions. Pet. 17.

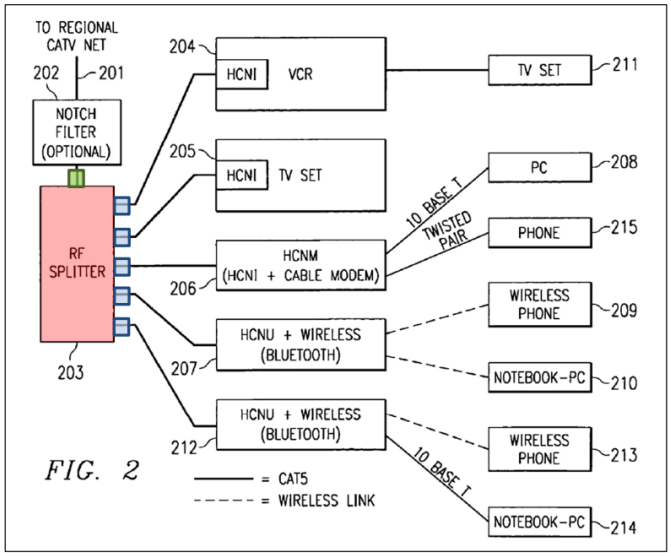

FIG. 2

Referring to Figure 2 above, Petitioner asserts that the RF splitter 203 (red) has a common port (green) connected to notch filter 202, and tap ports (blue) connected to devices 204–207, 212. Pet. 16–17 (citing Ex. 1005, 6:36–39; Ex. 1003 ¶ 63).

Petitioner further contends that Amit's Figure 7 (annotated) discloses a splitter 706 (red) with common port (green) connected to notch filter 707, and tap ports (blue) connected to modem 701, unit 702 and splitter 705 (red). Pet. 17–18. Petitioner further asserts that Amit's splitter 705 (red) has a common port (green) and tap ports (blue) connected to units 703, 704. *Id.* at 18.

Patent Owner does not dispute Petitioner's contentions.

We find that Petitioner has shown by a preponderance of the evidence that Amit's splitter ports disclose limitation 1.b.ii.

6. Limitation 1.c.i: Terminal Devices

Limitation 1.c.i recites "a plurality of terminal devices."

Petitioner contends that Amit discloses or renders this feature obvious. Pet. 18–20 (citing Ex. 1003 ¶¶ 68–74). Petitioner provides an annotated version of Amit's Figure 2 as disclosing this claimed feature. Pet. 19.

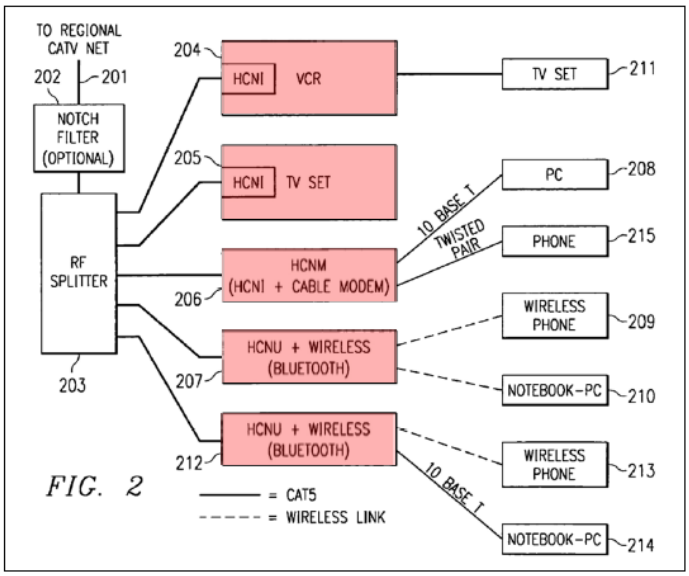

FIG. 2

Petitioner annotates Amit's Figure 2 above to show nodes 204–207, 212 (red) labeled "VCR" and "TV Set" with HCNIs (Home Cable Network Interfaces) as well as an HCNM (Home Cable Network Modem) and HCNUs (Home Cable Network Units) with Bluetooth. *Id.* at 18–20 (citing Ex. 1005, 6:26–41, 6:44–54, 6:57–64). Petitioner contends that Amit also refers to nodes 204–207, 212 as "home networking devices," "units," and "home units." *Id.* at 18–19 (citing Ex. 1005, 6:26–41). Petitioner further contends that Amit's Figure 7 (annotated) discloses nodes 701–704 (red) labeled "HCNM1," "HCNU2," "HCNU3," and "HCNU4." *Id.* at 20.

Patent Owner does not dispute Petitioner's contentions.

We find that Petitioner has shown by a preponderance of the evidence that Amit's nodes disclose limitation 1.c.i.

7. Limitation 1.c.ii: Coupled to Splitter

Limitation 1.c.ii recites "each terminal device being coupled to a tap port of at least one signal splitter."

Petitioner contends that Amit discloses or renders obvious limitation 1.c.ii. Pet. 20 (citing Ex. 1003 ¶¶ 75–78). For example, Petitioner contends that Amit's Figure 2 shows terminal devices 204–207, 212 coupled to a tap port of splitter 203, and in Figure 7, terminal devices 701–704 couple to a tap port of splitter 706, while terminal devices 703, 704 couple to a tap port of splitter 705. *Id.* (citing Ex. 1006, 6:36–41, Figs. 2, 7).

Patent Owner does not dispute Petitioner's contentions.

We find that Petitioner has shown by a preponderance of the evidence that each of Amit's terminal devices are coupled to a tap port of at least one splitter as recited in limitation 1.c.ii.

8. Limitation 1.c.iii: Frequency Bins

Limitation 1.c.iii recites "at least one of the terminal devices providing frequency bins with more transmit bits which occupy parts of the channel where the signal to noise ratio (SNR) is high."

Petitioner contends that the combination of Amit and Jacobsen renders obvious limitation 1.c.iii. Pet. 20–22 (citing Ex. 1003 ¶¶ 79–83), 67 (citing Ex. 1003 ¶¶ 272–276).

To explain its contentions, Petitioner provides Amit's Figure 5 as shown below. Pet. 21.

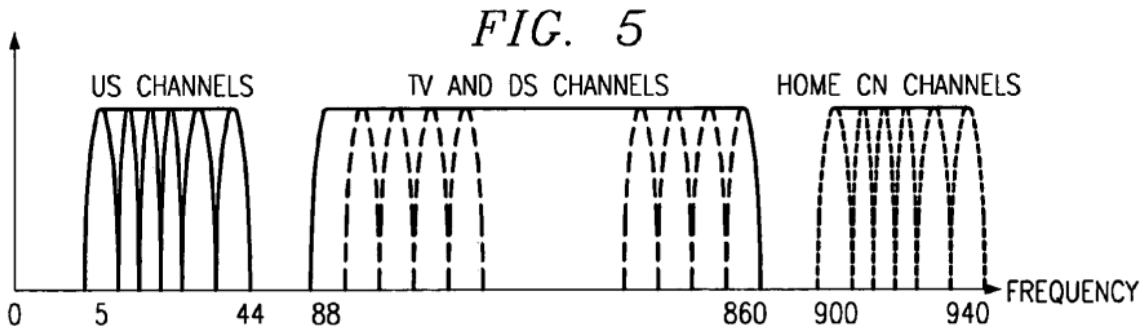

Petitioner asserts that Amit's Figure 5 above shows that the terminal devices have multiple channels ("frequency bins") for terminal devices to use to for transmission. *Id.* at 20–21 (citing Ex. 1001, 8:42–43; Ex. 1005, 5:28–29, 7:61–65).

Petitioner further contends that Amit's terminal devices provide more transmit bits which occupy parts of the channel in which the SNR is high. *Id.* at 21 (citing Ex. 1005, 8:30–39). Petitioner notes that Amit teaches that "[t]he modulation method is QPSK, QAM 16, QAM 64 or QAM 256 **according to the channel conditions**." *Id.* (citing Ex. 1005, 8:30–32). Petitioner further observes that "[t]he modulator of the home networking device MUST provide QPSK and QAM 16" and "MAY provide QAM 64 and QAM 256." *Id.* (citing Ex. 1005, 8:33–36). Petitioner also notes that Amit discloses that "[t]he modulator MUST provide 2,560 ksym/sec" and "MAY provide 160, 320, 640, 1,280, and 5,120 ksym/sec." *Id.* (citing Ex. 1005, 8:37–39). Petitioner states that Amit thus explains that the modulation method and number of data symbols per second vary "according to the channel conditions." *Id.* at 21–22 (citing Ex. 1005, 8:30–39). Petitioner asserts that a POSITA would have understood that, where a channel's SNR is high (i.e., good channel conditions), Amit's terminal device would use a higher modulation method (e.g., QAM 64) providing

more transmit bits (i.e., higher ksym/sec). *Id.* at 22 (citing Ex. 1003 ¶ 82; Ex. 1013; Ex. 1014).

In addition, Petitioner contends that Jacobsen teaches that OFDM frequency channels are "frequency bins," explaining that "[i]n multicarrier modulation, a channel is divided into N equal-bandwidth subchannels, each with its own carrier." *Id.* at 67 (citing Ex. 1007, 9). Petitioner observes that Jacobsen teaches "[i]n contrast to traditional frequency-division multiplexing (FDM) techniques, multicarrier modulation does not constrain the number of bits per subchannel to be equal for all subchannels." *Id.* at 68 (citing Ex. 1007, 9–10). Petitioner further asserts that Jacobsen teaches that "bits are originally assigned to subchannels just after training during system initialization in direct proportion to the subchannel signal-to-noise ratios" and that "[a]s a result, subchannels that suffer from little attenuation and/or little noise carry the most bits, while subchannels that are severely attenuated and/or very noisy might not carry any bits." *Id.* (citing Ex. 1007, 10 (emphases omitted)). Petitioner states that "it would have been obvious for Amit's terminal devices to provide frequency bins with more transmit bits occupying parts of the channel with high SNR." *Id.*

Patent Owner argues that Petitioner asserts that Amit's terminal device provides more transmit bits to parts of the channel where SNR is high, but fails to identify any disclosure in Amit of using SNR as required by the claim limitation. PO Resp. 56 (citing Ex. 2007 ¶¶ 124–125). Patent Owner criticizes Petitioner for simply identifying disclosures in Amit that say different modulation schemes can be selected to support different numbers of bits per signal without regard to how or why. *Id.* (citing Pet. 21–22; Ex. 1005, 8:30–39). According to Patent Owner, the mere fact that a

single modulation scheme is selected for the entire system based on channel conditions and equipment capabilities does not suggest the claimed limitation or that Amit's device has the required capability. *Id.* (citing Ex. 2007 ¶ 126).

Patent Owner further argues that use of different frequency bins requires use of multiple frequencies or carriers, but that Amit's Single Home embodiment does not provide for frequency planning or allocation. *Id.* (citing Ex. 1005, 8:45–49, 26:14–65). Patent Owner alleges that Amit's Connected Home embodiment uses FDM which does not vary the number of bits allocated to frequency bins. *Id.* (citing Ex. 1005, 26:15–65; Ex. 1007, 9–10; Ex. 2007 ¶ 129; Ex. 2008, 119:18–120:11).

Patent Owner further argues that Jacobsen is silent regarding a terminal device providing frequency bins or OFDM/DMT functionalities. PO Resp. 57 (citing Ex. 2007 ¶¶ 209–210; Ex. 2008, 115:11–23). Patent Owner asserts that Jacobsen is an out-of-home system and a POSITA would have understood bit allocation to occur out of home at the cable point of origin or localized CMTS or headend. *Id.* Patent Owner avers that nothing in Jacobsen suggests placing this functionality in a home terminal device consistent with Amit in which the CMTS assigns frequency bands in FDM, not a terminal device on a LAN assigning OFDM frequency bins. *Id.* (citing Ex. 1005, 30:14–15; Ex. 2007 ¶ 210). Patent Owner alleges that nothing in Dr. Acton's declaration suggests configuring terminal devices to be capable of multicarrier functionality, let alone the complex bit allocation of the claims. *Id.* at 57–58 (citing Ex. 1003 ¶¶ 127–134).

Petitioner replies that Patent Owner concedes that Amit's modulation scheme is selected based on channel conditions, and asserts that it would be

obvious to implement multiple subchannels where each's modulation method is based on channel conditions (i.e., the SNR). Pet. Reply 26 (citing PO Resp. 56; Ex. 1005, 15:23–25; Ex. 1030 ¶ 59). Petitioner argues that Amit's Figure 5 shows multiple "HomeCN channels" and a POSITA would find it obvious to use these channels in a single home network. *Id.* at 26–27 (citing Ex. 1005, 7:61–63; Ex. 1030 ¶ 60; Ex. 1037).

We agree with Petitioner that the combination of Amit and Jacobsen discloses or at least suggests limitation 1.c.iii. Amit teaches that its modem is capable of QPSK, QAM 16, QAM 64 or QAM 256 modulation according to channel conditions. Ex. 1003 ¶ 82; Ex. 1005, 8:30–36. Jacobsen teaches that bits are assigned to subchannels in direct proportion to the subchannel SNRs such that "**subchannels that suffer from little attenuation and/or little noise carry the most bits**, while subchannels that are severely attenuated and/or very noisy might not carry any bits." *Id.* ¶ 274 (citing Ex. 1007, 9–10). We agree with Petitioner that the claimed "frequency bins" are equivalent to Amit's and Jacobsen's subchannels. *Id.*

Although Patent Owner argues that Jacobsen's teachings relate to an out-of-home network and would not be applicable to terminal devices in Amit's in-home network, Amit's HCNM modem interfaces between the two networks and thus must have the capabilities to communicate on both. *See, e.g.*, Ex. 1005, Fig. 2 (206). Moreover, since Jacobsen's systems are interactive and use both downstream and upstream frequencies, the terminal devices of Jacobsen's network would each include a transmitter and a receiver (i.e., Jacobsen's Figure 1 shows the transmitter and receiver configuration for one direction). Ex. 1007, 9–10; Ex. 1030 ¶ 61. It would have been understood that Jacobsen's homes would include cable modems

like Amit's HCNM. Pet. 29 (citing Ex. 1005, 1:18–25, Fig. 2 (206); Ex. 1003 ¶ 104); Ex. 1007, 10, Fig. 2.

Consequently, we determine that Petitioner has shown by a preponderance of the evidence that the combination of Amit and Jacobsen discloses or at least suggests limitation 1.c.iii.

9. Limitation 1.d: Reflections

Limitation 1.d recites

> wherein the reflections from the filter provide a path for terminal devices back through the tap port of the signal splitter and out each other tap port to transmit signals to other terminal devices thus allowing terminal devices to communicate directly with each other to form the signal distribution network.

Petitioner contends that Amit discloses or renders obvious limitation 1.d. Pet. 22–25 (citing Ex. 1003 ¶¶ 84–91). For example, Petitioner notes that Amit discloses that "devices may communicate **directly** (not via the headend)" because signals "propagate between the devices **via reflections** from other devices in the line." *Id.* at 22 (citing Ex. 1005, 3:19–23). Petitioner further states that under certain conditions reflection from Amit's notch filter may be used as the "main signal." *Id.* at 23 (citing Ex. 1005, 13:44–14:5).

Petitioner asserts that "[f]or Figure 2's network, Amit teaches or renders obvious using reflections from the filter as pathways for terminal devices to communicate directly with each other." *Id.* (citing Ex. 1003 ¶ 86). Specifically, Petitioner contends that Amit's notch filter 202 is a band reject filter that does not pass a certain RF range that is used by the home networking devices 204–207, 212. *Id.* (citing Ex. 1005, 6:29–31). Petitioner states that "Amit discloses that the filter reflects those RF signals, providing

a path back through the tap port of the signal splitter and out each other tap port." *Id.* (citing Ex. 1005, 3:19–23, 14:1–5).

Petitioner provides an annotated version of Amit's Figure 2, reproduced below.

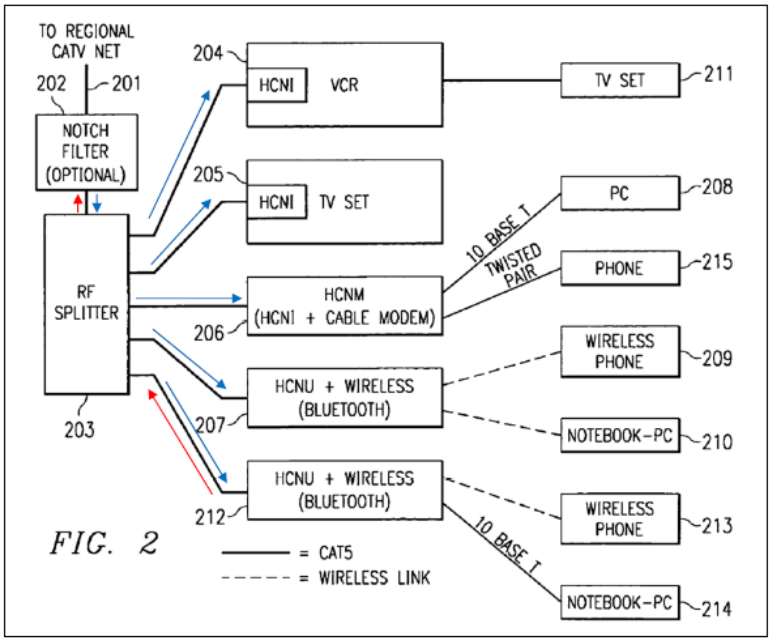

FIG. 2

Petitioner annotates Figure 2 to show an exemplary path where HCNU 212 transmits signals through splitter 203 that reflect off filter 202 before passing through splitter 203 again and flowing out each other tap port to terminal devices 204–207. *Id.* at 23–24.

Petitioner also relies on Amit's Figure 7 and related description as disclosing or rendering obvious limitation 1.d. *Id.* at 24–25 (Ex. 1005, 13:65–67, 14:10–65).

Patent Owner does not dispute Petitioner's contentions concerning limitation 1.d.

We find that Petitioner has shown by a preponderance of the evidence that Amit's notch filter receives signals from a home networking device via a splitter port and reflects them back through other splitter ports so that the

devices can communicate directly with one another, such that Amit discloses or renders obvious limitation 1.d.

10. Conclusion for Claim 1

We determine that Petitioner has shown by a preponderance of the evidence that Jacobsen is prior art to the '249 patent, that a POSITA would have combined Amit and Jacobsen with a reasonable expectation of success, and that each limitation of claim 1 is taught or suggested by the combination of Amit and Jacobsen. Accordingly, Petitioner has shown by a preponderance of the evidence that claim 1 would have been obvious over the combination of Amit and Jacobsen notwithstanding Patent Owner's arguments.

11. Claim 5

Petitioner relies on its ground 2 mapping for the limitations of claim 5 except for limitations 5.a.ii and 5.a.iii for which it supplements Amit with Jacobsen's teachings. Pet. 67–69 (citing Ex. 1003 ¶¶ 271–285). Petitioner contends that claim 5 parallels claim 1 but also recites coaxial building wiring (preamble) and OFDM modulation (limitation 5.a.ii). *Id.* at 39–40 (citing Ex. 1003 ¶¶ 135–163). Patent Owner submits the same arguments for claim 5 as for claim 1, which we find unavailing for the same reasons explained for claim 1.

a) Limitation 5.pre: Broadband Local Area Network

Claim 5's preamble recites a "broadband local area network using coaxial cable building wiring as a communication channel, the network comprising."

Petitioner contends that Amit teaches "home networking solutions that utilize in-home TV wiring for supplying high rate connectivity between any

two home networking nodes" via "coaxial (coax) cables." Pet. 40 (citing Ex. 1005, 2:34–55). Petitioner further asserts that Amit explains that "devices may communicate directly (not via the headend) using RF signaling over the coax cable." *Id.* (citing Ex. 1005, 3:19–21).

Patent Owner does not dispute Petitioner's contentions.

We find that Petitioner has shown by a preponderance of the evidence that preamble limitation 5.pre is disclosed or at least suggested by Amit's broadband local area network using building coaxial cable as a communication channel. Accordingly, we do not reach the issue of whether the preamble is limiting.

b) Limitation 5.a.i: Terminal Devices

Limitation 5.a.i recites "a plurality of terminal devices."

Petitioner relies on its showing for limitation 1.c.i for this limitation. Pet. 40 (citing *id.* § IV.A.2.a).

Patent Owner does not dispute Petitioner's contention.

We find that Petitioner has shown by a preponderance of the evidence that the terminal devices of limitation 5.a.i are disclosed or suggested by the combination of Amit and Jacobsen.

c) Limitation 5.a.ii: OFDM Modulation

Limitation 5.a.ii recites "each terminal device communicating with other terminal devices using orthogonal frequency division multiplexing (OFDM) modulation."

Petitioner asserts that limitation 5.a.ii would have been obvious over the combination of Amit and Jacobsen. Pet. 68 (citing Ex. 1003 ¶¶ 278–283). Petitioner states that Jacobsen discloses multicarrier modulation which divides a channel into N sub-channels with a frequency response that

is roughly constant across each subchannel. *Id.* (citing Ex. 1007, 9). Petitioner argues that Jacobsen mentions that its multicarrier modulation is DMT, which is synonymous with OFDM. *Id.* Petitioner contends that Jacobsen recognizes that DMT is "a common form of multicarrier modulation" that "does not constrain the number of bits per subchannel to be equal for all subchannels." *Id.* at 68–69 (citing Ex. 1007, 9–10). Petitioner asserts that "it would have been obvious for Amit's terminal devices to communicate with other terminal devices using OFDM modulation." *Id.* at 69.

Patent Owner does not dispute that Jacobsen discloses DMT/OFDM capabilities and that Amit discloses terminal devices, but does dispute the motivation to combine these teachings, which we found unavailing in the discussion for claim 1. *See* § II.F.4, *supra*.

Accordingly, we determine that Petitioner has shown by a preponderance of the evidence that limitation 5.a.ii is disclosed or suggested by the combination of Amit and Jacobsen notwithstanding Patent Owner's arguments.

d) Limitation 5.a.iii: Frequency Bins

Limitation 5.a.iii recites "at least one of the terminal devices providing frequency bins with more transmit bits which occupy parts of the channel where the signal to noise ratio (SNR) is high."

Petitioner contends that limitation 5.a.iii would have been obvious over the OFDM teachings in the combination of Amit and Jacobsen for the reasons addressed concerning limitation 1.c.iii. Pet. 67–69.

To the extent that Patent Owner's arguments from ground 1 apply here, we addressed those arguments under the subsection addressing limitation 1.c.iii (§ II.F.8) and find them unavailing.

We determine that Petitioner has shown by a preponderance of the evidence that limitation 5.a.iii is disclosed or at least suggested by the combination of Amit's terminal devices and Jacobsen's teaching of DTM allocating transmit bits based on SNR.

e) Limitation 5.b: Network of Building Cables

Limitation 5.b recites "a network of building cables coupled to the plurality of terminal devices."

Petitioner contends that Amit discloses limitation 5.b. Pet. 41–42 (citing Ex. 1003 ¶¶ 148–152), 67. According to Petitioner, Amit discloses that TV wiring consists of coaxial cables connecting the antenna/cable TV output, "typically via passive splitters, to the cable outlets at specific points in the home," and that Amit "provides home networking solutions that utilize in-home TV wiring for supplying high rate connectivity between any two home networking nodes." *Id.* at 41 (citing Ex. 1005, 2:4–6, 2:44–46). Petitioner asserts that Amit's Figures 2 and 7 show a plurality of nodes or "terminal devices" 204–206, 212, 701–704 coupled to a network of coaxial building cables.

Patent Owner does not dispute Petitioner's contentions.

We find that Petitioner has shown by a preponderance of the evidence that Amit's network of coaxial cables discloses limitation 5.b.

f) Limitation 5.c.i: Filter

Limitation 5.c.i recites "a filter having a first and second port, the first port connected to a building point of entry and the second port connected to the plurality of terminal devices via the network of building cables."

Petitioner contends that Amit discloses or renders obvious limitation 5.c.i. Pet. 42–45 (citing Ex. 1003 ¶¶ 153–157), 67. Petitioner asserts that Amit's notch filters 202, 707 are located at the entry point of a building, and have first ports connected to a regional CATV plant via cable 201. *Id.* at 43–45 (citing Ex. 1005, 4:30–34, 6:28, 13:31–45, Figs. 2, 7 (annotated); Ex. 1003 ¶¶ 154–155).

Petitioner further contends that Amit discloses or renders obvious the filter being connected to a splitter and each terminal device being coupled to tap ports of the splitter. *Id.* at 44 (citing Ex. 1003 ¶ 156). Petitioner states that Amit's Figures 2 and 7 show terminal devices connected to the second port of the filter via the network of building cables and the splitter. *Id.* at 44–45 (citing Ex. 1005, 2:44–46).

Patent Owner does not dispute Petitioner's contentions.

We find that Petitioner has shown by a preponderance of the evidence that Amit's notch filter discloses or renders obvious limitation 5.c.i.

g) Limitation 5.c.ii: Reflection

Limitation 5.c.ii recites "wherein signals transmitted by any of the terminal devices and received at the second port of the filter are rejected by the filter such that such signals do not pass through the filter, but rather are reflected back into the network of building cables in order to create a communication path between the transmitting terminal device and at least one other terminal device coupled to the network of building cables."

Petitioner contends that Amit discloses or renders obvious limitation 5.c.ii. Pet. 67 (citing *id.* § IV.B.3.b). Petitioner asserts that Amit's "signals transmitted by any of the terminal devices" will be "received at the second port of the filter." *Id.* at 45. Petitioner further argues that Amit's "signals . . . received at the second port of the filter are rejected by the filter such that such signals do not pass through the filter, but rather are reflected back into the network of building." *Id.* at 45–46. Petitioner states that Amit's reflections "create a communication path between the transmitting terminal device and at least one other terminal device coupled to the network of building cables." *Id.* at 46.

Patent Owner does not dispute Petitioner's contentions.

We find that Petitioner has shown by a preponderance of the evidence that Amit's filter reflects signals as claimed such that limitation 5.c.ii is disclosed or suggested by the combination of Amit and Jacobsen.

h) Conclusion for Claim 5

Petitioner has shown by a preponderance of the evidence that Jacobsen is prior art to the '249 patent, that a POSITA would have combined Amit and Jacobsen with a reasonable expectation of success, and that all limitations of claim 5 are taught or suggested by the combination of Amit and Jacobsen. Accordingly, we determine that Petitioner has shown by a preponderance of the evidence that claim 5 would have been obvious over the combination of Amit and Jacobsen notwithstanding Patent Owner's arguments.

12. Claim 10

Petitioner relies on its ground 2 mapping of Amit to the limitations of claim 10 except for limitation 10.c.iii for which it supplements Amit with

Jacobsen's teachings. Pet. 69–71 (citing Ex. 1003 ¶¶ 286–296). Petitioner contends that claim 10 parallels claim 1 but adds equalization. *Id.* at 46. Patent Owner does not argue that the combination of Amit and Jacobsen fails to teach or suggest any limitation of claim 10, but instead relies on arguments we previously discussed and found unavailing. *See* §§ II.F.3–5, *supra*. We address Petitioner's mapping of the combination of Amit and Jacobsen to the limitations of claim 10 below.

a) Limitation 10.pre: Broadband Local Area Network

The preamble of claim 10 recites "[a] broadband local area network for transmitting modulated signals using coaxial cable building wiring containing a plurality of branches comprising:"

Petitioner contends that Amit discloses a broadband LAN using coaxial cable building wiring for transmitting signals modulated using QPSK and QAM. Pet. 46 (citing Ex. 1005, 2:34–55, 25:1–10). Petitioner further asserts that Amit's networks use coaxial cable building wiring containing a plurality of branches that connect terminal devices to the splitters and notch filter. Pet. 46–47 (citing Ex. 1005, Figs. 2, 7).

Patent Owner does not dispute Petitioner's contentions.

We find that Petitioner has shown by a preponderance of the evidence that Amit teaches the preamble of claim 10 and thus do not address whether the preamble is limiting.

b) Limitation 10.a: Filter

Limitation 10.a recites "a filter located at the point of entry of the building wiring that rejects network signals originating in the building wiring such that the rejected network signals do not pass through the filter,

but rather are reflected by the filter back into all branches of the building wiring."

Petitioner contends that Amit discloses that its filter is located at the point of entry of the building wiring, which Amit refers to as "the input to the user premises." Pet. 47–48 (citing Ex. 1005, 4:30–34). Petitioner asserts that Amit's Figures 2 and 7 demonstrate that its networks use coaxial cable building wiring containing a plurality of branches that connect the terminal devices to the splitters and notch filter. *Id.* at 48–49. Petitioner avers that the filter reflects network signals originating in the building back into all branches of the building wiring.

Patent Owner does not dispute Petitioner's contentions.

We find that Petitioner has shown by a preponderance of the evidence that Amit's filter discloses limitation 10.a.

c) Limitation 10.b: Signal Splitter

Limitation 10.b recites "at least one signal splitter."

Petitioner contends that Amit discloses claimed splitter. Pet. 49 (citing *id.* § IV.A.2(a) (limitation 1.b.i)). Specifically, Petitioner contends that Amit's Figure 2 discloses that splitter 203 splits the signal coming from and to the CATV plant 201, to the signals coming to and from terminal units 204–207 and 214. Pet. 14–15 (citing Ex. 1005, 6:36–39; Ex. 1003 ¶¶ 56–59). Petitioner also relies on Amit's Figure 7 as disclosing a network with two splitters 705, 706. Pet. 15–16 (citing Ex. 1005, 5:31).

Patent Owner does not dispute Petitioner's contentions.

Petitioner shows by a preponderance of the evidence that Amit's splitters each disclose limitation 10.b.

d) Limitation 10.c.i: Terminal Devices

Limitation 10.c.i recites "a plurality of terminal devices connected to the wiring branches."

Petitioner contends that "Amit's Figures 2 and 7 demonstrate that its network's coaxial cable building wiring contains wiring branches connected to a plurality of terminal devices." Pet. 49 (citing Ex. 1003 ¶¶ 177–178). Petitioner indicates that terminals 204–207, 212 in Amit's Figure 2, and terminals 701–704 in Amit's Figure 7, are the claimed "terminal devices." *See, e.g.*, Pet. 20.

Patent Owner does not dispute Petitioner's contentions.

Petitioner has shown by a preponderance of the evidence that Amit's terminal devices disclose limitation 10.c.i.

e) Limitation 10.c.ii: Reflected Signal Path

Limitation 10.c.ii recites "each terminal device capable of communicating with other terminal devices [using] the reflected signal path created by the filter."

Petitioner contends that, as discussed for limitation 1.d, Amit discloses that "the reflections from the filter provide a path . . . thus allowing terminal devices to communicate directly with each other" and that "each terminal device [is] capable of communicating with other terminal devices [using] the reflected signal path created by the filter." Pet. 49–50 (citing Ex. 1003 ¶¶ 179–181). *See also* Pet. 22–25 (citing Ex. 1005, 3:19–23, 13:44–14:5, 14:10–65, Figs. 2, 7) (discussing limitation 1.d).

Patent Owner does not dispute Petitioner's contentions.

Petitioner has shown by a preponderance of the evidence that Amit discloses limitation 10.c.ii.

f) Limitation 10.c.iii: Equalization

Claim 10's limitation 10.c.iii recites "wherein the terminal devices perform equalization on the received signal that restores a flat frequency response to overcome communication channel impairments caused by the reflected signals."

Petitioner argues that the combination of Amit and Jacobsen discloses limitation 10.c.iii. Pet. 69–71 (citing Ex. 1003 ¶¶ 286–296). Petitioner asserts that Jacobsen teaches single-carrier QAM with equalization to reduce ISI and thereby improve system performance. *Id.* at 69–70 (citing Ex. 1007, 9).

Furthermore, Petitioner contends that Jacobsen teaches that "the complexity of DMT systems is proportional to the FFT/IFFT size used in the implementation (or, equivalently, the number of subchannels into which the channel is divided)." *Id.* at 70 (citing Ex. 1007, 11). Petitioner states that Jacobsen teaches "vary[ing] the FFT size to determine the effect of a reduced number of subchannels on the achievable bit rate." *Id.* (citing Ex. 1007, 11). In addition, Petitioner states that Jacobsen teaches using "the smaller FFT sizes (for example, $2N \leq 256$) by implementing a **time-domain equalizer (TEQ)**, the purpose of which is to reduce the required length of the cyclic prefix in exchange for an increase in system complexity." *Id.* (citing Ex. 1007, 12).

Petitioner argues that the combination of Amit and Jacobsen overcomes frequency selective impairments on communication channels caused by reflected signals. Pet. 70. Specifically, Petitioner contends that Amit recognizes how reflections from the filter can cause frequency selective channel impairments. Pet. 70 (citing *id.* § IV.B.3(c) (discussing

limitation 10.c.iii)). Petitioner avers that Jacobsen similarly recognizes that microreflections cause various distortions on a CATV network, that taps, amplifiers, and splitters can cause reflection at their insertion points, that splitters in subscriber homes are known to have poor isolation characteristics, and that the effect of reflected signals on the frequency transfer characteristic of a CATV channel is passband ripple. *Id.* at 70–71 (citing Ex. 1007, 8).

Petitioner notes that Jacobsen further teaches that "[v]ariations in a channel's frequency response cause successively transmitted symbols to interfere with one another, an effect known as intersymbol interference (ISI)" and that "[w]ithout some scheme to combat ISI, a receiver would make detection errors." *Id.* at 71 (citing Ex. 1007, 8). Petitioner states that Jacobsen teaches that "[c]onsequently, a robust digital transmission technique for multimedia signals must alleviate the ISI caused by CATV channels if reliable transmission is to be achieved." *Id.* (citing Ex. 1007, 9).

Patent Owner's arguments for limitation 10.c.iii relate to whether Jacobsen is prior art, and the motivation to combine Amit and Jacobsen with reasonable expectation of success. *See* §§ II.F.3–5, *supra*. As we found those arguments unavailing, and Patent Owner does not contend that limitation 10.c.iii is missing from Petitioner's combination, we determine that Petitioner has shown by a preponderance of the evidence that the combination of Amit and Jacobsen teaches or at least suggests limitation 10.c.iii.

g) Conclusion for Claim 10

Petitioner has shown by a preponderance of the evidence that Jacobsen is prior art to the '249 patent, that a POSITA would have combined

Amit and Jacobsen with a reasonable expectation of success, and that the combination teaches each limitation of claim 10. Accordingly, Petitioner has shown by preponderant evidence that claim 10 would have been obvious over the combination of Amit and Jacobsen.

13. Claims 2, 9, and 17

Claim 2 depends from claim 1 and recites "wherein at least one of the communication channels between terminal devices uses time division duplex protocol for communications and the communications are synchronized by broadcasting a beacon message on the network." Claims 9 and 17 recite identical limitations but depend from claims 5 and 10, respectively.

Petitioner contends that claims 2, 9, and 17 are obvious over the combination of Amit and Jacobsen. Pet. 71 (citing Ex. 1003 ¶¶ 297–300). Specifically, Petitioner argues that, as discussed for ground 1, Amit discloses a TDD protocol for channel communication, and the '249 patent acknowledges that it was known that TD-based protocols use broadcast beacon messages to synchronize nodes. *Id.* (citing Ex. 1001, 2:42–59, 6:35–48). Petitioner's expert, Dr. Acton, states that the '249 patent acknowledges, by reference to U.S. Patent No. 5,889,765 to Gibbs, that it was known that TD-based protocols use broadcast beacon messages to synchronize nodes. Ex. 1003 ¶ 299.

Patent Owner argues that Amit does not disclose TDD but instead discloses time division multiplexing (TDM), which are not the same. PO Resp. 46–48 (citing Ex. 1005, 7:16–19, 26:9–11, 26:41–42, 26:49–52; Ex. 2007 ¶¶ 95, 145–147, 211; Ex. 2008, 48:2–7). Consistent with the Director's Order, and our analysis *supra* in Sections II.D.1 and II.E.2, we agree with Patent Owner that Amit's TDM does not teach or suggest the

claimed TDD. Dir. Ord. 3; PO Resp. 46–47. Petitioner does not rely on Jacobsen for the specific limitations of claims 2, 9, and 17.

Accordingly, we determine that Petitioner has not shown by preponderant evidence that claims 2, 9, and 17 would have been obvious over the combination of Amit and Jacobsen.

14. Claims 4 and 6

Claim 4 depends from claim 1 and recites "wherein the signal modulation used by the terminal devices is orthogonal frequency division multiplexing (OFDM) and the modulation order of each OFDM carrier is adjusted according to the signal to noise ratio (SNR) at each OFDM carrier frequency to overcome frequency selective channel impairments caused by the reflections from the filter." Claim 6 recites a similar limitation but depends from claim 5.

Petitioner contends that claims 4 and 6 are obvious over the combination of Amit and Jacobsen. Pet. 72–73 (citing Ex. 1003 ¶¶ 301–308). Specifically, Petitioner asserts that the combination discloses that each terminal device communicates with other terminal devices using OFDM modulation, and that the modulation order of each OFDM carrier is adjusted according to the SNR at each OFDM carrier frequency. *Id.* at 72.

Petitioner further notes that Jacobsen discloses that multicarrier modulation does not constrain the number of bits per subchannel to be equal, and bits may be assigned in proportion to the subchannel SNRs. *Id.* at 72 (citing Ex. 1007, 9–10). Accordingly, a subchannel with little attenuation or noise may carry most bits while subchannels that are severely impacted might not carry any bits. *Id.* at 72–73 (citing Ex. 1007, 10). Petitioner states that Jacobsen discloses that this property of multicarrier modulation can be

used to alleviate problems caused by frequency-domain ripple and interferers where each subchannel supports its own QAM modulation. *Id.* at 73 (citing Ex. 1007, 10).

Petitioner contends that Amit similarly explains that the modulation method is QPSK, QAM 16, QAM 64 or QAM 256 according to the channel conditions. *Id.* (citing Ex. 1005, 8:30–32).

Petitioner further contends that Amit and Jacobsen both recognize how filter reflections can cause frequency selective channel impairments, and asserts that overcoming such impairments by adjusting the modulation order of each OFDM carrier is obvious over the combination of Amit and Jacobsen. *Id.*

Patent Owner does not present any arguments specific to claim 4 and claim 6.

We determine that Petitioner has shown by a preponderance of the evidence that claims 4 and 6 are obvious over the combination of Amit and Jacobsen.

15. Claim 8

Claim 8 depends from claim 5 and recites "wherein the frequency used for communicating is above the cable television band."

Petitioner contends that claim 8 is obvious over the combination of Amit and Jacobsen. Pet. 73–74 (citing Ex. 1003 ¶¶ 309–312). Specifically, Petitioner contends that Amit discloses using a frequency above the cable television band, as shown in Amit's Figure 5 (900–940 MHz). *Id.* at 58–59, 73 (citing Ex. 1005, 3:24–30, 5:28–30; Ex. 1003 ¶¶ 218–221). In addition, Petitioner asserts that Jacobsen discloses a usable spectrum up to 1GHz, which would include frequencies above the cable television band. *Id.* at 73–

74 (citing Ex. 1007, 8). Petitioner asserts, therefore, that it would have been obvious that the combination of Amit and Jacobsen would include a frequency for communicating that is above the cable television band, e.g., 860 MHz to 1 GHz). *Id.* at 74 (citing Ex. 1003 ¶ 315).

Patent Owner does not present any argument specific to claim 8.

We determine that Petitioner has shown by a preponderance of the evidence that claim 8 would have been obvious over the combination of Amit and Jacobsen for the reasons that Petitioner mentions.

16. Claim 12

Claim 12 depends from claim 10 and recites "wherein the equalization is time domain equalization."

Petitioner asserts that claim 12 is obvious over the combination of Amit and Jacobsen. Pet. 74 (citing Ex. 1003 ¶¶ 313–316). Specifically, Petitioner asserts that Jacobsen discloses implementing a time-domain equalizer (TEQ). *Id.* at 74 (citing Ex. 1007, 12).

Patent Owner does not present any argument specific to claim 12.

We determine that Petitioner has shown by a preponderance of the evidence that claim 12 would have been obvious over the combination of Amit and Jacobsen for the reason Petitioner mentions.

17. Claim 13

Claim 13 depends from claim 10 and recites "wherein the equalization is adaptive."

Petitioner contends that claim 13 is obvious over Amit and Jacobsen. Pet. 74 (citing Ex. 1003 ¶¶ 317–320). Petitioner states that Jacobsen notes that a decision feedback equalizer (DFE) may be used to reduce the complexity of a single-carrier system. *Id.* (citing Ex. 1007, 13). Petitioner

asserts that DFE is an example of an adaptive equalizer. *Id.* (citing Ex. 1003 ¶ 319).

Petitioner does not present any argument specific to claim 13.

After reviewing Petitioner's unrefuted evidence, we agree that claim 13 is obvious over the combination of Amit and Jacobsen.

18. Claims 14 and 16

Claim 14 depends from claim 13 and recites "wherein the terminal devices use orthogonal frequency division multiplexing (OFDM) modulation to overcome the communication channel impairments caused by the reflected signals." Claim 16 depends directly from claim 10, and recites the same limitation.

Petitioner contends that claims 14 and 16 are obvious over the combination of Amit and Jacobsen. Pet. 74–75 (citing Ex. 1003 ¶¶ 321–324). Specifically, as discussed for limitation 5.a.ii and claim 4, Petitioner asserts that Jacobsen discloses using multicarrier modulation including OFDM/DMT to overcome channel impairments caused by reflected signals. *Id.* at 72–73 (citing Ex. 1007, 9–10 in discussing claim 4), 75.

Patent Owner does not present any argument specific to claim 14 and claim 16.

We agree with Petitioner that Jacobsen's DMT is equivalent or at least similar to OFDM modulation, and that Jacobsen's mention of frequency-domain ripple constitutes a communication channel impairment caused by reflected signals which OFDM modulation would overcome. Pet. 72–75; Ex. 1007, 8–10.

Petitioner has shown by a preponderance of the evidence that claim 14 and claim 16 are obvious over the combination of Amit and Jacobsen.

19. Conclusion for Ground 3

Petitioner has shown by a preponderance of the evidence that Jacobsen is prior art to the '249 patent, that a POSITA would have combined Amit and Jacobsen with a reasonable expectation of success, and that all limitations of claims 1, 4–6, 8, 10, 12–14, and 16 challenged in ground 3 are disclosed or suggested by the combination. Accordingly, Petitioner has shown by a preponderance of the evidence that of claims 1, 4–6, 8, 10, 12–14, and 16 would have been obvious over the combination of Amit and Jacobsen. Petitioner has not demonstrated by a preponderance of the evidence the unpatentability of claims 2, 9, and 17.

G. Ground 4: Amit, Jacobsen, and DSL-Book

We now address Petitioner's contention that claims 2–3, 7, 9–13, 15, and 17 would have been obvious over the combination of Amit, Jacobsen, and DSL-Book, and Patent Owner's s arguments for patentability for this ground. Pet. 75–87; PO Resp. 54–56.

1. DSL-Book (Ex. 1008)

DSL-Book is a textbook titled "DSL: Simulation Techniques and Standards Development for Digital Subscriber Line Systems." Ex. 1008, cover. DSL-Book discloses "simulation/implementation techniques and reference materials for the design and development of DSL systems." Ex. 1008, 12. The textbook states that "[m]any techniques developed for DSLs can be very useful also for next-generation communication systems, such as a high-throughput home digital network." *Id.* DSL-Book also includes a chapter on "channel equalization" which mentions an equalizer for a DMT system which calculates coefficients and SNRs. *Id.* at 149–150.

2. Analogous Art – DSL-Book

A reference is analogous art to the claimed invention if: (1) the reference is from the same field of endeavor as the claimed invention; or (2) the reference is reasonably pertinent to the problem faced by the inventor. *In re Icon Health and Fitness, Inc.,* 496 F.3d 1374, 1379-80 (Fed. Cir. 2007) (quoting *In re Clay,* 966 F.2d 656, 658 (Fed. Cir. 1992)); *In re Klein,* 647 F.3d 1343 (Fed. Cir. 2011). "The Supreme Court's decision in *KSR* . . . directs us to construe the scope of analogous art broadly." *Wyers v. Master Lock Co.*, 616 F.3d 1231, 1238 (Fed. Cir. 2010). "The field of endeavor of a patent is not limited to the specific point of novelty, the narrowest possible conception of the field, or the particular focus within a given field." *Unwired Planet, LLC v. Google Inc.*, 841 F.3d 995, 1001 (Fed. Cir. 2016).

Petitioner contends that DSL-Book is an analogous reference from the same field of endeavor as the '249 patent: communication techniques for broadband networks. Pet. 76 (citing Ex. 1003 ¶¶ 329–353). Petitioner further asserts that DSL-Book (like Amit and Jacobsen) is reasonably pertinent to the problem that the '249 patent purports to address, which is "providing a suitable path for terminal-to-terminal communication." *Id.* at 77 (citing Ex. 1001, 3:4–7).

Patent Owner contends that the '249 patent's field is local area broadband coaxial cable networks, and that "DSL-Book's description of simulation/implementation techniques and reference materials for the design and development of wide-area DSL systems is far afield from that." PO Resp. 28. Patent Owner argues that the '249 patent is directed to tap port-to-port isolation and providing a suitable signal path for terminal-to-

terminal communications in a coaxial cable wired building whereas DSL-Book is directed to communication of data from a cable office to subscriber premises over copper telephone lines, and is silent regarding coaxial networks or problems associated with them. PO Resp. 29 (citing *id.* §§ V.B.1.a–b).

Patent Owner asserts that the '249 patent's field of endeavor is confirmed by its title, abstract, field of invention, figures, written description, and claims. PO Resp. 29–30 (citing Ex. 1001, codes (54, 57), 1:20–27, 2:15–21, 3:64–4:8, Figs. 1–2, claims 1 and 5; Ex. 2007 ¶¶ 105–108, 111–113, 151–153; *In re Wood*, 599 F.2d 1032, 1036 (CCPA 1979); *Airbus S.A.S. v. Firepass Corp.*, 941 F.3d 1374, 1382 (Fed. Cir. 2019); *In re Bigio*, 381 F.3d 1320, 1325 (Fed. Cir. 2004)). According to Patent Owner, DSL-Book's field of endeavor covers networks that are vastly different in scale and use different media and architectures. PO Resp. 30–31 (citing *id.* § V.B.2.a; Ex. 1008, 5; Ex. 2007 ¶¶ 103, 111–113; Ex. 2008, 79:16–80:2; Ex. 2009, 15). Specifically, Patent Owner asserts that DSL-Book relates to communicating data from a telephone company's central office over kilometers of twisted pair copper wires using a DSL protocol, whereas the '249 patent relates to technologies for a local network in a single building over coaxial cable. *Id.* at 31 (citing Ex. 2008, 79:16–80:2, Ex. 2009, 15; Ex. 2007 ¶ 103).

Patent Owner further argues that Petitioner's field of endeavor is too broad; that Dr. Action was unable to provide criteria to determine if a network is broadband; and that Petitioner inconsistently defined the field of endeavor elsewhere in the Petition as "broadband **coaxial** networks." PO Resp. 31 (citing Pet. 62, 76; Ex. 2008, 54:8–57:5, 58:11–59:3). Patent

Owner contends that the Petitioner's approach of identifying overly-generic technological overlap has long been rejected and that, under Federal Circuit precedent, even art with substantial similarities and in the same technological area as the patent-at-issue may not be in the same field. *Id.* at 31–32 (citing *In re Clay*, 966 F.2d at 657–60; *Wang Labs., Inc. v. Toshiba Corp.*, 993 F.2d 858, 864–65 (Fed. Cir. 1993)).

Petitioner replies that DSL-Book recognizes that "[m]any techniques developed for DSLs can be very useful **also for next-generation communication systems,** such as a **high-throughput home digital network**" and that DSL-Book "**also** can be used as a reference guide" to "research studies in **digital communication systems**." Pet. Reply 13 (citing Ex. 1008, 12). Petitioner contends that Patent Owner's expert agrees, explaining that "[a]t the time of the patent, the DSL books were published, so that would be extrinsic evidence that we could look to." *Id.* at 13–14 (citing Ex. 1029, 120:17–121:2). Petitioner asserts that DSL-Book is thus in the '249 patent's field of endeavor. *Id.* at 14 (citing Ex. 1030 ¶¶ 34–39). Petitioner further states that Patent Owner overly limits the field of endeavor to "local area broadband coaxial cable networks" when the '249 patent's "Technical Field" relates to "**broadband communication networks** and specifically to **network interface devices and network wiring**." *Id.* (citing Ex. 1001, 1:14–16). Petitioner further notes that claim 1 does not reference coaxial cable but instead claims a "**signal distribution network**." *Id.* (citing Ex. 1001, claim 1). Petitioner argues that it correctly identified the field of endeavor as "communication techniques for broadband networks." Pet. Reply 14 (citing Pet. 76).

Petitioner notes that the prior art addressed in the background section of the '249 patent includes, for example, "Ethernet Transport Facility Over **Digital Subscriber Lines** [which] discloses a method of transporting Ethernet over **twisted pair lines**." Pet. Reply 14 (citing Ex. 1001, 2:50–67). Petitioner further notes that the "Humpleman patents disclose a home network using an active network interface unit to **couple the home network to the external network**." *Id.* (citing Ex. 1001, 2:59–61). Petitioner contends that "[t]hese references address communication techniques for broadband networks,-not just local area coaxial cable networks." *Id.* Petitioner argues that if these references were from a different field of endeavor, then they would not have been incorporated by reference in the '249 patent. *Id.* at 14–15 (citing Ex. 1001, 2:55–56).

Petitioner further argues that Patent Owner's reliance on the *Clay* and *Wang* decisions is misplaced because *Clay* concerns gels used in the petroleum industry, not communication techniques, and held that storage of refined liquid hydrocarbons in a tank concerned a different field of endeavor than the extraction of crude petroleum from the ground. *Id.* (citing 966 F.2d 656, 659 (Fed. Cir. 1992)). According to Petitioner, *Wang* involved prior art involving memory circuits of varying sizes whereas the patents at issue taught compact modular memories. *Id.* (citing Wang, 993 F.2d at 864–865).

We agree with Petitioner that DSL-Book is in the same field of endeavor as the '249 patent, namely, broadband communication networks. Pet. 76; Pet. Reply 14 (citing Ex. 1001, 1:14–16). Although Patent Owner focuses on certain narrow disclosures in the '249 patent, as Petitioner notes, the technologies referenced are broader than Patent Owner recognizes. For example, as Petitioner notes, the "Technical Field" of the '249 patent is

"**broadband communication networks**" and specifically "**network interface devices and network wiring**." Pet. Reply 14 (citing Ex. 1001, 1:14–16).

Furthermore, the '249 patent explicitly mentions DSL-Book. Ex. 1001, 8:57–60. In addition, the '249 patent incorporates by reference patents addressing DSL technologies and twisted pair networks. Pet. Reply 14–15 (citing Ex. 1001, 2:42–56 (U.S. Patent Nos. 5,940,387 and 6,005,861 to Humpleman; and U.S. Patent No. 6,008,368 to Rubinstain)).

Therefore, we determine that DSL-Book is in the same field of endeavor as the '249 patent, and thus constitutes analogous art. Accordingly, we do not address whether DSL-Book would also be analogous because it is directed to the same problem as the '249 patent.

3. Motivation to Combine Amit, Jacobsen, and DSL-Book

Petitioner contends that a POSITA would have been motivated to incorporate various features from DSL-Book, including OFDM, equalization, TDD protocol, and FEC, into the Amit-Jacobsen combination. Pet. 75–78 (citing Ex. 1003 ¶¶ 329–353).

Petitioner further contends that a POSITA would have been motivated to consider techniques for non-coaxial networks in coaxial networks because all three references demonstrate an overlap between coaxial and non-coaxial networks, and DSL-Book recognizes that "[m]any techniques developed for DSLs can be very useful also for **next-generation communication systems, such as a high-throughput home digital network**." *Id.* at 76–77 (citing Ex. 1005, 1:18–25, 1:31–37, 28:67; Ex. 1008, 12; Ex. 1003 ¶ 332).

Petitioner further contends that "all three references seek to overcome network communication channel impairments" and address the problem of

"providing a suitable path for terminal-to-terminal communication" as described in the '249 patent. *Id.* at 77–78 (citing Ex. 1001, 3:4–7; Ex. 1008, 149–150).

Moreover, Petitioner asserts that DSL-Book "builds upon the concepts already discussed in Amit and Jacobsen, including OFDM, equalization, TDD, and FEC," and that "a POSITA would have been motivated to use DSL-Book for details on implementing these concepts." *Id.* at 78 (citing Ex. 1003 ¶ 335).

Patent Owner argues that Amit's coaxial cable network and DSL-Book's twisted pair network are fundamentally different networks with different modes of operation. PO Resp. 35 (citing Ex. 2007 ¶¶ 104–122, 216). Patent Owner states that twisted pair cables include two unshielded copper wires that are twisted together whereas coaxial cable has a single copper core with shielding against external noise. *Id.* at 35–36 (citing Ex. 2007 ¶¶ 104–122, 216; Ex. 2008, 20:1–24; Ex. 2011, 82, 121; Ex. 2012; Ex. 2014, 2). Patent Owner asserts that DSL networks are subject to significant signal attenuation at high frequencies and thus operate at much lower frequencies than Amit's coaxial network and do not suffer significant negative transmission-line effects unlike coaxial cable networks operating at higher frequencies. *Id.* at 36 (citing Ex. 1005, 8:20–30; Ex. 1008, 5, 14; Ex. 2001, 10–11; Ex. 2007 ¶¶ 94–96, 99–101, 113, 120; Ex. 2011, 82; Ex. 2014). Patent Owner asserts that the lower transmission frequency of twisted pair networks means they are unable to carry transmissions to multiple users and instead are used only for point-to-point communications. *Id.* (citing Ex. 2007 ¶ 113; Ex. 2013, 2:65–67, 3:10–12, 4:44–46). Patent Owner further asserts that twisted pair wires are more susceptible to far-end

reflected noise than coaxial cables. *Id.* at 36–37 (citing Ex. 2007 ¶¶ 121–122).

Patent Owner argues that a POSITA would not attempt to improve Petitioner's combination of Amit and Jacobsen with DSL-Book because it exhibits "*vastly worse*" bit rates. *Id.* at 38 (citing Ex. 1005, 21:21–22; Ex. 1006, 14, 17; Ex. 1007, 10–11; Ex. 1008, 10, 12; Ex. 2007 ¶¶ 162–165, 219–221; Ex. 2008, 25:5–20, 27:19–28:4).

Patent Owner further asserts that improving bit rate or efficiency is the type of generic concern that exists across all systems and is thus not a valid motivation to combine. *Id.* at 38 (citing *ActiveVideo Networks, Inc. v. Verizon Commc'ns, Inc.*, 694 F.3d 1312, 1328 (Fed. Cir. 2012)). According to Patent Owner, this generic basis for the combination would not provide faster communications, and is evidence that Petitioner is using the '249 patent as a roadmap to arrive at the challenged claims. *Id.* at 38 (citing *TQ Delta, LLC v. Cisco Sys.*, 942 F.3d 1352, 1361 (Fed. Cir. 2019)).

Furthermore, Patent Owner argues that Petitioner relies on Amit's lack of interference with VDSL as a basis to combine the references, but asserts that this would actually suggest a reason not to combine the references. PO Resp. 38 (citing Pet. 28–29, 76). Specifically, Patent Owner argues that Amit's system "does not interfere with VDSL simply because it operates on different frequencies and uses different carrier signals on a different medium." *Id.* Patent Owner asserts that the Amit and DSL systems must be different to preserve lack of interference. *Id.* at 38–39 (citing Ex. 2007 ¶¶ 166, 222). According to Patent Owner, Amit mentions that a prior system HomePNA interfered with ADSL and VDSL protocols because it used the same medium and frequencies. *Id.* at 39 (citing

Ex. 1005, 19:18–22; Ex. 2007 ¶¶ 167, 222). Patent Owner alleges that a POSITA would not consider implementing DSL systems into Amit's coaxial network when Amit teaches avoidance of DSL technologies and provides an alternative to HomePNA which uses a different frequency band and medium. *Id.* (citing Ex. 2007 ¶¶ 167–168, 223).

Patent Owner alleges that Petitioner is engaging in "textbook hindsight" by "ignoring the actual teachings and technical requirements of the various references in favor of conclusory statements driven by a desire to find claimed concepts in the prior art." *Id.* Patent Owner asserts that a POSITA would not have been motivated in view of DSL-Book to modify Amit. *Id.*

Petitioner replies that Patent Owner's expert, Mr. Bates, disagreed with Patent Owner's argument that coax networks are "fundamentally different" from twisted-pair networks. Pet. Reply 16 (citing PO Resp. 35–39). Petitioner states that Mr. Bates testified that a single network will often use both twisted-pair and coaxial cable. *Id.* at 17 (citing Ex. 1029, 44:6–12, 85:3–5, 207:14–19).

Petitioner further argues that Petitioner did not propose replacing Amit's coaxial network with a DSL network, but instead stated that a POSITA would have been motivated to incorporate various features from DSL-Book, including OFDM, equalization, TDD protocol, and FEC, into the combination of Amit and Jacobsen, for reasons recognized in the Institution Decision. Pet. Reply 17–18 (citing Inst. Dec. 40–41). Accordingly, Petitioner argues that it did not simply provide a "generic concern that exists across all systems," as Patent Owner contends. *Id.* at 18 (citing PO Resp. 38).

Petitioner further disputes Patent Owner's argument that Amit teaches to avoid DSL technologies. Pet. Reply 18; PO Resp. 38–39. Petitioner contends that Patent Owner's characterization of OFDM, equalization, TDD, and FEC as "DSL techniques" is not correct, and in any case, use of these techniques would not cause Amit's network to interfere with DSL. Pet. Reply 18.

Patent Owner replies that Petitioner fails to explain why a POSITA would look to improve Amit's and Jacobsen's bit rate performance when DSL-Book provides lower bit rate performance. PO Sur-Reply 18 (citing Pet. 78; Ex. 2007 ¶¶ 219–221).

We determine that Petitioner has shown by a preponderance of the evidence that a POSITA would have been motivated to combine Amit, Jacobsen, and DSL-Book for the reasons that Petitioner mentions. Pet. 75–78 (citing Ex. 1003 ¶¶ 329–353). We have already addressed the motivation to combine Amit and Jacobsen and determined that there were ample reasons that would motivate a POSITA to combine them. *See* § II.F.4, *supra*.

We agree with Petitioner that DSL-Book teaches that techniques developed for DSLs would be useful for home digital networks such as Amit's. Pet 76–77 (citing Ex. 1008, 12). As Petitioner notes, DSL-Book builds upon concepts discussed in Amit and Jacobsen, including OFDM, equalization, TDD, and FEC, and a POSITA would have looked to DSL-Book for details on implementing these concepts. *Id.* at 78 (citing Ex. 1003 ¶ 335). Hence, we disagree with Patent Owner's assertion that Petitioner's reasons to combine were generic.

In addition, we hold to our findings in the Institution Decision that all three "references disclose design and market trends toward faster broadband coaxial networks," "address similar topics such as high-speed communications, cable networks, and home networks, and address ways to overcome signal impairments on them, which would have led a POSITA to consider them together." Inst. Dec. 40–41.

We do not agree with Patent Owner's argument that Amit and DSL-Book are directed to different types of networks such that a POSITA would not have combined them. PO Resp. 35. Amit discloses that its networks use both coaxial cable and twisted pair wiring, and DSL-Book expressly teaches that its techniques are applicable to home networks. *See* Pet. 77 (citing Ex. 1005, 1:18–25, 1:31–37, 28:67; Ex. 1008, 12; Ex. 1003 ¶ 332).

As to Patent Owner's contention that combining DSL-Book with Amit and Jacobsen would lead to lower bit rates, we do not agree that is a correct understanding of the references considered together. "[I]f a technique has been used to improve one device, and a person of ordinary skill in the art would recognize that it would improve similar devices in the same way, using the technique is obvious unless its actual application is beyond his or her skill." *KSR*, 550 U.S. at 417. The application of OFDM, equalization, TDD, and FEC from DSL-Book would not be fundamentally different when applied to Amit's network. *See, e.g.*, Ex. 1030 ¶¶ 40–41. In addition, the fact that Amit uses both coaxial cable and twisted pair wiring suggests that a POSITA would explore techniques that can be used on both types of media. *Id.*

Accordingly, Petitioner has shown by a preponderance of the evidence that a POSITA would have been motivated to combine Amit, Jacobsen, and DSL-Book.

4. Reasonable Expectation of Success

Petitioner contends that a POSITA would have had a reasonable expectation of success for similar reasons explained for ground 2 and for the reasons stated in Dr. Acton's declaration. Pet. 81 (citing Ex. 1003 ¶¶ 347–353).

We have already addressed reasonable expectation of success with respect to ground 3 (§ II.F.5), and Petitioner's contentions are similar for the combination of Amit and Jacobsen with DSL-Book. *Id.* Our view of these assertions remains unchanged with the addition of DSL-Book to this ground.

We agree with Dr. Acton's statement that "a POSITA would have expected DSL-Book's teachings of OFDM modulation to work in the [ ] Amit-Jacobsen network, which already employed OFDM." Ex. 1003 ¶ 350. A POSITA would have been instructed by the teachings of the references, and would have had relevant coursework. *Id.* In addition, QAM and OFDM were well-known in the art, and the predictability of implementing the combination, all support a reasonable expectation of success. *Id.*

Patent Owner does not dispute Petitioner's contentions of a reasonable expectation of success for ground 4.

We determine that Petitioner has shown by a preponderance of the evidence that a POSITA would have had a reasonable expectation of success in combining Amit, Jacobsen and DSL-Book.

5. Claims 2, 3, 9, and 17

In grounds 1 to 3, we decided that Petitioner had not shown by a preponderance of the evidence that claims 2, 3, 9, and 17 would have been obvious. *See* §§ II.D.1, II.E.2, and II.F.13, *supra*. The addition of DSL-Book to the combination in this ground does not change our view for these claims.

Although, as Petitioner contends, DSL-Book discloses TDD protocol (Ex. 1008, 91), we agree with Patent Owner that DSL-Book is silent regarding the claimed beacon messages. Pet. 81 (citing Ex. 1005, 26:1–45; Ex. 1008, 91, 443–444; Ex. 1003 ¶¶ 344–346); PO Resp. 48–49 (citing Ex. 1008, 21–22; Ex. 2007 ¶¶ 191–192, 224–227; Ex. 2008, 46:25–47:7). Instead, DSL-Book discusses use of pilot tones in DMT, which is not the same as the claimed beacon messages used with TDD to achieve synchronization of the terminal devices. Ex. 1008, 443–444.

Accordingly, we determine that Petitioner has not shown by a preponderance of the evidence that claims 2, 3, 9, and 17 would have been obvious over the combination of Amit, Jacobsen, and DSL-Book.

6. Claim 7

Claim 7 depends from claim 5, and is directed to adjusting power level of each OFDM carrier to overcome selective channel impairments caused by reflections from the filter.

Petitioner states that DSL-Book discloses that "[o]ne way to **improve the transmission efficiency** with integer number of bits is to **assign a different signal power for each subchannel**." Pet. 87 (citing Ex. 1008, 21).

Patent Owner does not present any argument specific to claim 7.

We agree with Petitioner's argument that DSL-Book discloses adjusting signal power to overcome selective channel impairments, which would have been applicable to Amit's home network using terminal-to-terminal communications by signal reflections. *Id.* Petitioner has shown by a preponderance of the evidence that claim 7 would have been obvious over the combination of Amit, Jacobsen, and DSL-Book.

7. Claim 11

Claim 11 depends from claim 10 and recites "wherein the equalization is frequency domain equalization."

Petitioner contends that DSL-Book discloses that a frequency domain equalizer (FEQ) is required to complete received signal detection and that its purpose is to "correct phase and amplitude distortion in each subchannel such that a unified symbol detection mechanism can be applied to all subchannels." Pet. 82–83 (citing Ex. 1008, 20).

Patent Owner does not provide any arguments specific to claim 11.

Petitioner is correct that DSL-Book discloses a frequency domain equalizer used for the purposes that Petitioner mentions. Ex. 1008, 20. Accordingly, we determine that Petitioner has shown by a preponderance of the evidence that claim 11 would have been obvious over the combination of Amit, Jacobsen, and DSL-Book.

8. Claim 15

Claim 15 depends from claims 10, 13, and 14 and recites "wherein the terminal devices use forward error correction to recover the transmitted signals without errors."

Petitioner asserts that the combination of Amit, Jacobsen, and DSL-Book renders obvious claim 15. Pet. 87 (citing Ex. 1003 ¶¶ 385–389).

Specifically, Petitioner asserts that Amit teaches using FEC. Pet. 87 (citing *id.* § IV.B.4.(i)). In addition, Petitioner contends that DSL-Book teaches using FEC with DMT to improve transmission. *Id.* (citing Ex. 1008, 11). Moreover, Petitioner states that, like the '249 patent, DSL-Book teaches using known FEC types. *Id.* (citing Ex. 1008, 24; Ex. 1001, 8:44–47 (discussing Reed-Solomon coding)).

Patent Owner does not provide any arguments specific to claim 15.

We addressed claims 10, 13, and 14 in ground 3 and found them obvious over the combination. See §§ II.F.12 (claim 10), II.F.17 (claim 13), II.F.18 (claim 14). We agree with Petitioner that both Amit and DSL-Book use FEC codes to recover transmitted signals without errors. Pet. 87 (citing Ex. 1003 ¶¶ 385–389).

Petitioner has shown by a preponderance of the evidence that claim 15 would have been obvious over the combination of Amit, Jacobsen, and DSL-Book.

9. Conclusion for Ground 4

Petitioner has shown by a preponderance of the evidence that DSL-Book is analogous art, that a POSITA would have combined Amit, Jacobsen, and DSL-Book with a reasonable expectation of success, and that all limitations claims 7, 10–13, and 15 challenged in ground 4 are disclosed or suggested by the combination, but not claims 2, 3, 9, and 17. Accordingly, Petitioner has shown by a preponderance of the evidence that claims 7, 10–13, and 15 would have been obvious over the combination of Amit, Jacobsen, and DSL-Book, but not claims 2, 3, 9, and 17.

III. CONCLUSION

For ground 1, we have determined that Petitioner has not demonstrated by a preponderance of the evidence that claim 2 is unpatentable as obvious over Amit. For ground 2, Petitioner has not demonstrated preponderant evidence that claims 2, 3, 9, and 17 are unpatentable as obvious over the combination of Amit and ADSL/VDSL. For ground 3, we have determined claims 1, 4–6, 8, 10, 12–14, and 16 challenged in ground 3 are obvious over the combination of Amit and Jacobsen, but not claims 2, 3, 9, and 17. For ground 4, we have determined that Petitioner has shown by preponderant evidence that claims 7, 10–13, and 15 are obvious over the combination of Amit, Jacobsen, and DSL-Book, but not claims 2, 3, 9, and 17.

IV. ORDER

For the foregoing reasons, it is

ORDERED that, pursuant to 35 U.S.C. § 318(a), claims 1, 4–8, and 10–16 of the '249 patent have been shown to be unpatentable, but not claims 2, 3, 9, and 17; and

FURTHER ORDERED that any party seeking judicial review must comply with the notice and service requirements of 37 C.F.R. § 90.2.[8]

---

[8] Should Patent Owner wish to pursue amendment of the challenged claims in a reissue or reexamination proceeding subsequent to the issuance of this Decision, we draw Patent Owner's attention to the April 2019 Notice Regarding Options for Amendments by Patent Owner Through Reissue or Reexamination During a Pending AIA Trial Proceeding. *See* 84 Fed. Reg. 16,654 (Apr. 22, 2019). If Patent Owner chooses to file a reissue application or a request for reexamination of the challenged patent, we remind Patent

Outcome of Decision after Director Remand:

Claim(s)	35 U.S.C. §	Reference(s)/Basis	Claim(s) Shown Unpatentable	Claim(s) Not shown Unpatentable
2	103(a)	Amit		2
2, 3, 9, 17	103(a)	Amit, ADSL/VDSL		2, 3, 9, 17
2, 9, 17	103(a)	Amit, Jacobsen		2, 9, 17
2, 3, 9, 17	103(a)	Amit, Jacobsen, DSL-Book		2, 3, 9, 17
Overall Outcome				2, 3, 9, 17

Final Outcome of Final Written Decision after Director Remand:

Claim(s)	35 U.S.C. §	Reference(s)/Basis	Claim(s) Shown Unpatentable	Claim(s) Not shown Unpatentable
1–2	103(a)	Amit[9]		2
1–17	103(a)	Amit, ADSL/VDSL[10]		2, 3, 9, 17
1–2, 4–6, 8–10, 12–14, 16–17	103(a)	Amit, Jacobsen	1, 4–6, 8, 10, 12–14, 16	2, 9, 17

Owner of its continuing obligation to notify the Board of any such related matters in updated mandatory notices. *See* 37 C.F.R. § 42.8(a)(3), (b)(2).

[9] Because we determined that claim 1 was unpatentable over Amit and Jacobsen, we decline to address that claim on this ground

[10] As explained above, because we determine that claims 1, 4–8, and 10–16 are unpatentable over (1) Amit, (2) Amit and Jacobsen and/or (3) Amit, Jacobsen, and DSL-Book, we decline to address those claims on this ground.

Claim(s)	35 U.S.C. §	Reference(s)/Basis	Claim(s) Shown Unpatentable	Claim(s) Not shown Unpatentable
2–3, 7, 9–13, 15, 17	103(a)	Amit, Jacobsen, DSL-Book	7, 10–13, 15	2, 3, 9, 17
Overall Outcome			1, 4–8, 10–16	2, 3, 9, 17

For PETITIONER:

Adam R. Shartzer
Ruffin B. Cordell
Matthew P. Mosteller
John J. Thuermer
Timothy Riffe
Usman Khan
Alyaman Amer
Richard A. Sterba
Michael J. Ballanco
Christopher Marchese
Aaron P. Pirouzna
FISH & RICHARDSON P.C.
shartzer@fr.com
cordell@fr.com
mosteller@fr.com
thuermer@fr.com
riffe@fr.com
khan@fr.com
amer@fr.com
sterba@fr.com
ipr45035-0036IP1@fr.com

For PATENT OWNER:

Jason A. Engel
Erik J. Halverson
Jared R. Lund
Joshua N. Andrews
K&L GATES LLP
jason.engel.ptab@klgates.com
erik.halverson@klgates.com
jared.lund@klgates.com
joshua.andrews@klgates.com