US 20050141738A1

(19) United States

(12) Patent Application Publication

(10) Pub. No.: US 2005/0141738 A1

(43) Pub. Date: Jun. 30, 2005

Karamuk

(54) HYDROPHOBIC COATING OF INDIVIDUAL COMPONENTS OF HEARING AID DEVICES

(76) Inventor: Erdal Karamuk, Zurich (CH)

Correspondence Address:
PEARNE & GORDON LLP
1801 EAST 9TH STREET
SUITE 1200
CLEVELAND, OH 44114-3108 (US)

(21) Appl. No.: 10/749,291

(22) Filed: Dec. 30, 2003

Publication Classification

(51) Int. Cl.[7] H04R 25/00

(52) U.S. Cl. 381/322; 381/324; 381/328

(57) ABSTRACT

For the liquid impervious sealing of smallest crevices, chinks, capillaries and/or openings within a housing wall, in particular of electronic or electrical devices, it is proposed to provide the housing wall at least in the area of the crevices, chinks, openings or capillaries with a hydrophobic coating. The advantage of applying a hydrophobic coating is that certain gas permeability can be maintained, so that a gas exchange between the interior of the housing and the environment is possible.

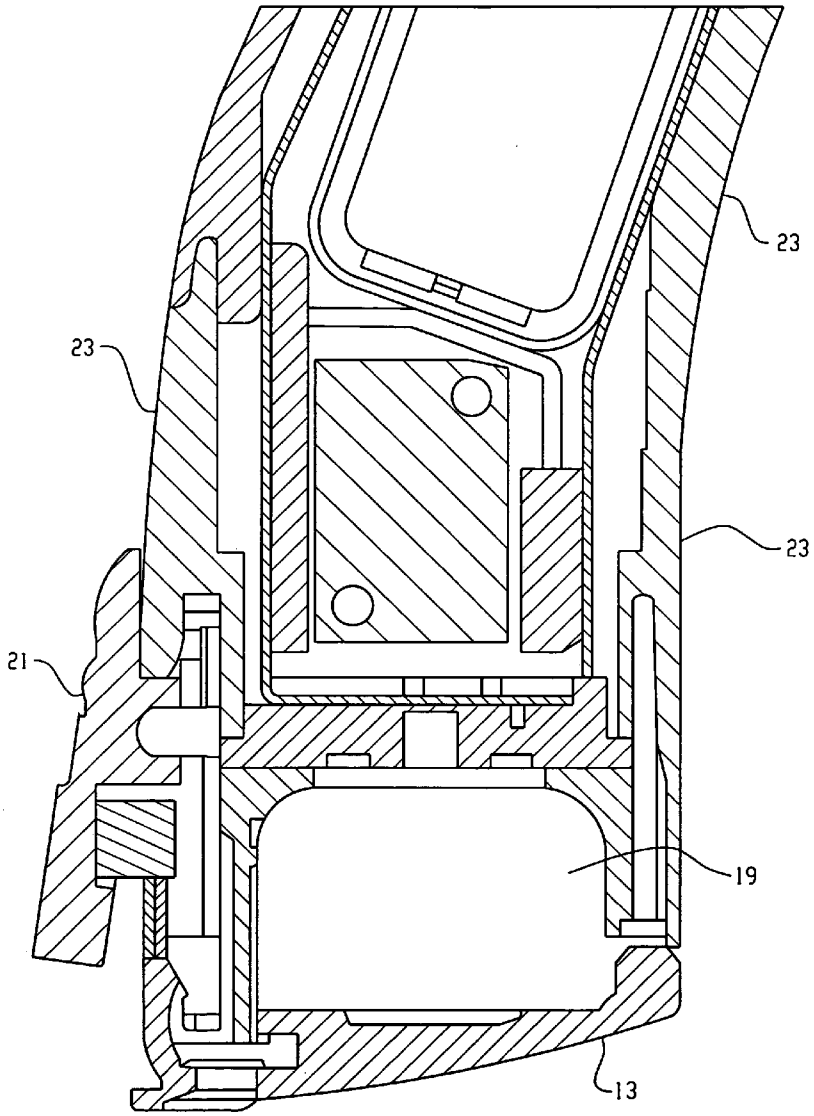

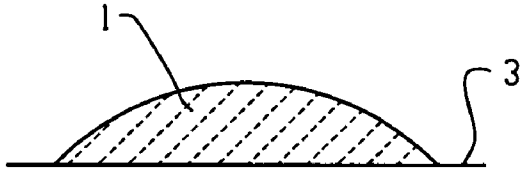

Fig. 1a

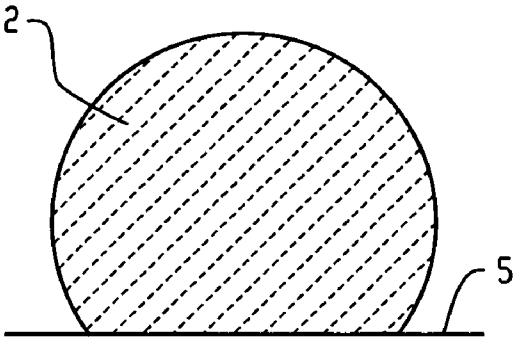

Fig. 1b

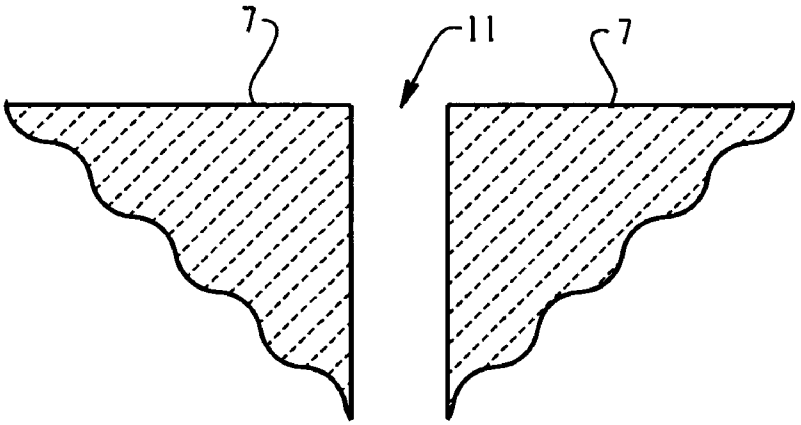

Fig. 2

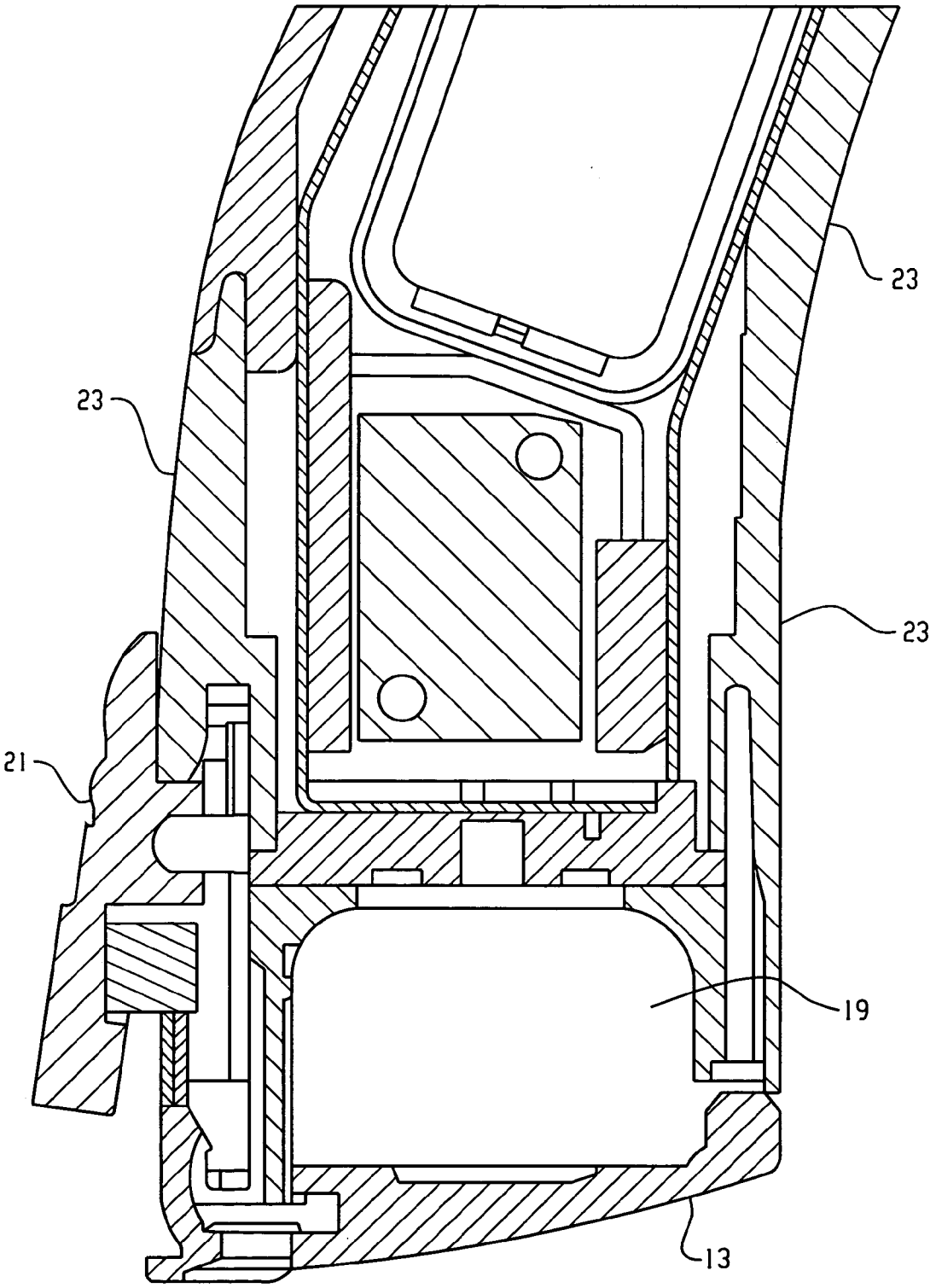

Fig. 3

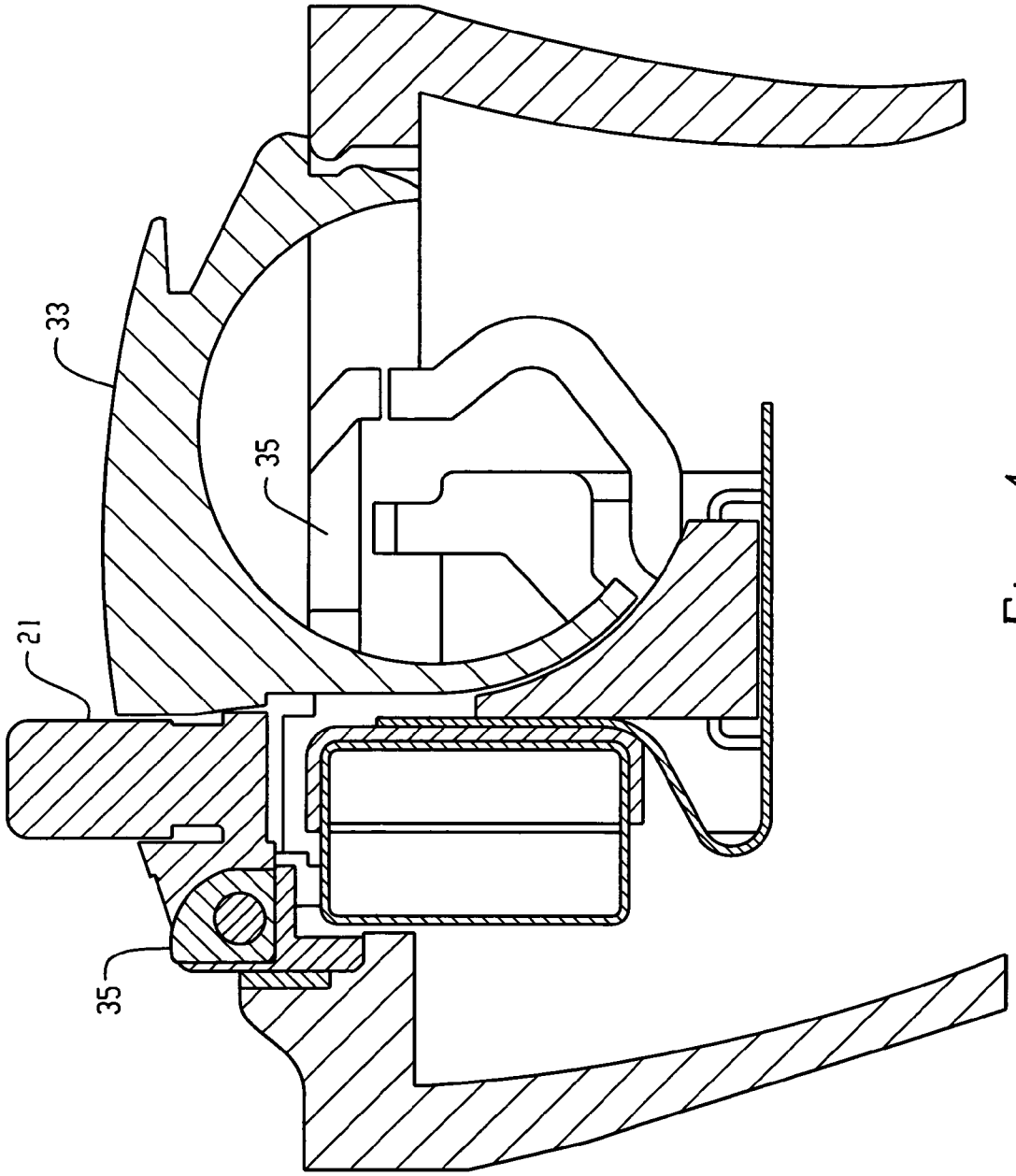

Fig. 4

HYDROPHOBIC COATING OF INDIVIDUAL COMPONENTS OF HEARING AID DEVICES

[0001] The present invention refers to a process for the sealing of smallest crevices, chinks and/or openings in walls of housings against penetration of fluids, the use of the process, housings of electrical or electronic devices having crevices, capillaries, chinks, openings and the same which have to be sealed against penetration of fluids, but not against penetration of gases as well as a battery compartment of a hearing aid device.

[0002] In particular with medical devices which are worn on the human body, there exists the danger that under the influence of humidity, perspiration, etc. certain parts and components of the device may corrode and not operate properly anymore. Especially penetration of fluids and perspiration into hearing aid devices may cause corrosion e.g. of the battery and in certain cases may cause disturbances of the electronic as well as of the electro-acoustical transducer. Correspondingly, various processes are described to make hearing aid devices more resistant against penetration of fluids.

[0003] In the DE 19502994A1 a watertight hearing aid device is described in which the characteristic of water tightness is achieved by complicated constructive measures such as gaskets and membranes. The DE 3834316C1 describes a completely watertight hearing aid device but does not show, compared to the patent application mentioned before, in detail how the water tightness is achieved but lays more stress on describing in detail the design of watertight operating elements. Again, in the JP 11069498, the U.S. Pat. No. 5,249,234A and the U.S. Pat. No. 6,510,230B2 various approaches are described to protect HdO-devices by using a protection envelope against the penetration of humidity. This protection envelope contains, according to the design, also materials to absorb perspiration or humidity.

[0004] In the US 2002/0181725A1 a condenser-microphone with a hydrophobic membrane is described to prevent the sticking together with the backplate and also various methods how the hydrophobic characteristic can be achieved.

[0005] The US 2002/100605A1 describes a hydrophobic coating for housings of electrical devices, in particular in relation to over-voltage conductors. Again, in further documents hydrophobic coatings of substrates are described, such as polymers, wood, concrete, etc., for which the above mentioned problem is no topic.

[0006] In particular medical devices which are worn on the human body, such as pulse frequency measuring devices, invasive detecting sensors for blood characteristics, such as oximetry-sensors, heart frequency measuring devices, hearing aid devices and the same are usually complicated devices which consist out of a plurality of individual mechanical or electronic components which are produced by using various processes and are finally assembled. Due to the mechanical tolerances of the injection moulding, plastic parts which in most cases are used for housings, battery compartment covers, switches and the same, microscopic capillary crevices can always accrue between the individual components also at the assembled status of the devices.

[0007] As most of these medical devices, such as e.g. hearing aid devices, are operated with zinc-air-batteries, it is not possible to close the device hermetically, as the battery needs a constant supply of oxygen to maintain the operation voltage. Of course, this requirement is also possible for other electronic or electrical components which need certain aeration. The consequence is that a complete impermeability, as it is described partly in the state of the art, is not suitable. Also complicated mechanical constructions with the use of gaskets and porous membranes, as they are known out of the state of the art, are not appropriate and make medical devices usually bigger and more expensive.

[0008] It is very difficult to envisage the influence of capillary crevices by designing a hearing aid device or generally of a smallest medical device. But as mechanical constructions for preventing penetration of liquids at existing device designs are not any more possible without any difficulties, it is a subject of the present invention to make medical devices, as in particular smallest devices and hearing aid devices, permeable without the need of changing, the design. It is also essential that at the complete sealing against penetration of humidity still a certain permeability of gas is present within the capillary crevices.

[0009] With the development of hearing aid devices and the same, the trend is going more and more into the direction of modular components which can be combined for constructions of different devices. To reduce working hours and costs and the improvement of reproducibility, also for so called in-the-ear hearing aid devices, an improved modularity is aspired. The inherent problems with modular systems are the mentioned capillary crevices which may accrue at the assembling of the individual modules to a device. Through these capillaries the penetration of fluids into the hearing aid device is accelerated.

[0010] Finally, the possibility fails to produce the hearing aid device out of a water repellent hydrophobic material which could reduce the wettability and therefore the penetration of fluids through capillary crevices fails, as it would not change anything about the fact that such materials like Teflon can neither be processed by ordinary processes, nor the mechanical and aesthetic criteria may be achieved.

[0011] To solve the above mentioned problem according to the present invention, it is proposed to protect individual components or areas of a casing wall of an electrical or electronic device, such as in particular a medical device, by specific hydrophobic coating in the area of the mentioned capillary crevices, chinks and the same against the penetration of a fluid, as the hydrophobic coating (hydrophobisation) of the individual components or housing areas is reducing the surface energy of the material. As a consequence, the liquid droplets, such as water, perspiration and the like, cannot spread on the surface of the component or housing areas but will contract with a higher contact angle, as it is shown in **FIGS. 1***a*, **1***b* and **2**. Therefore, it is more difficult for a liquid droplet to penetrate the interior of the medical device through the capillary crevices, such as e.g. a hearing aid device. However, the capillary crevices or chinks remain gas permeable and there are no seals arranged, so that the above mentioned gas exchange with the environment is guaranteed, such as e.g. the oxygen supply of zinc-air-batteries.

[0012] The invention will now be explained in more detail based on design examples and with reference to the attached drawings in which:

[0013] **FIGS. 1***a* & **1***b* show the influence of a hydrophobic coating on the wettability of the coated surface or the contact angle of water on the surface;

[0014] **FIG. 2** is a cross-section view of a capillary opening or a chink within a wall of a casing like e.g. of a hearing aid device and

[0015] **FIGS. 3 & 4** show each in a cross-section view an example of a battery case within a hearing aid device.

[0016] **FIG. 1***a* shows the contact angle of water on an untreated or uncoated surface **3**, as e.g. of a polymer, which is used for components of hearing aid devices. Exemplary used polymers are e.g. polyamide, ABS, etc.. The contact angle, according to **FIG. 1***a* is substantially below 80° C.

[0017] By applying a hydrophobic coating on the surface **5**, the contact angle can be increased substantially, as e.g. above 100°, which is equivalent to the wettability of Teflon.

[0018] In **FIG. 2** schematically in cross-section view, a capillary crevice **11** is shown, as it can be shaped within a wall **7** of the casing of a hearing aid device. The comparison of the two **FIGS. 1***a* and **1***b* shows clearly that a water droplet, according to **FIG. 1***a*, can penetrate easily through the capillary **11**, while the water droplet, according to **FIG. 1***b*, remains on the surface on the wall of the casing, as the penetration through the capillary **11** is impossible. But as there are no sealing means, such as e.g. a rubber seal and the like within the capillary, the gas permeability nevertheless can be maintained.

[0019] By means of the two **FIGS. 3 and 4**, concrete examples are to be shown which describe components, such as battery compartments of a hearing aid device which has to be sealed, according to the subject of the present invention.

[0020] **FIG. 3** shows in cross-section view the area of a battery compartment of a known hearing aid device which is sealed against penetration of a liquid. It is essential that all parts of the casing which are arranged in the area of the battery compartment **19** are provided with a hydrophobic coating. These parts are the battery cover **13**, the mentioned battery compartment **19**, the casing **23**, as well as the function switch **21**.

[0021] The individual components are coated after their manufacturing or delivering and prior to the assembling into a hearing aid device. For a casing, such as e.g. shown in **FIG. 3**, the consequence is e.g. that after the injection moulding it first has to be cleaned, and then pre-treated, if necessary, so that afterwards it can be coated hydrophobically by a process as will be described later on.

[0022] Which components of a specific hearing aid device design have to be coated to achieve a most effective protection against the penetration of a liquid, has to be evaluated for each hearing aid device individually. Basically, various components have to be coated to achieve a hydrophobisation on all sides of a capillary system, as described e.g. with reference to **FIG. 3**.

[0023] **FIG. 4** shows a further design of a battery compartment of a hearing aid device and again those parts or components of the casing of the device are to be designated which have to be provided with a hydrophobic coating. These parts are e.g. a function- or pushbutton **21**, the battery cover **33**, as well as a frame **35**.

[0024] Unlike the various above mentioned solutions to make devices impermeable against penetration of liquids in the present invention, a protection against liquid penetration is achieved by a selective surface treatment of individual components of an electrical or electronic device, such as e.g. of individual components of a hearing aid device. The process to be used to apply a hydrophobic coating on the components is of secondary importance for the present invention, as a plurality of suitable processes is known out of the state of the art. Following, some processes should be mentioned as examples for the better understanding of the present invention.

[0025] Basically, chemical and physical coating processes are suitable. Known are e.g. coatings by using so called Sol-Gel processes. These processes are known from the chemical nanotechnology. The surface is coated with hydrophobic nano-particles which are included within a polymer network. The coatings are composite materials (nano-composites) with organic and inorganic components which are produced by using Sol-Gel processes. The coating is applied by using simple dipping- or spraying processes followed by a hardening process. In principal, all those coatings can be applied to all kind of materials which can withstand the necessary temperatures for the hardening process. For the most materials which are used for the production of hearing aid devices, coatings by using Sol-Gel processes are possible. By selecting the individual chemical components, the properties of the surface can be adjusted and the hydrophobic or also the anti-microbial effect can be achieved, as e.g. described within the WO 03/094574.

[0026] The advantage of this coating lies in the simple handling and the low operating expenditure that is needed.

[0027] Nano-particles with hydrophobic and oleophobic properties and their application are also described e.g. within the DE 10051182A1, DE 19544763A1 or DE 19948336A1. Further processes for hydrophobic coatings on polymer surfaces can be found within the US 2002/0192385A1 or the DE 10106213A1.

[0028] Of course, also further chemical processes are known for hydrophobic coatings such as e.g. by using coatings made out of hydrated silanes (hydro-silicones), fluorine containing poly-condensate coatings, etc.

[0029] Besides chemical processes also physical processes, as e.g. coatings by using plasma processes, are suitable.

[0030] The coating is applied by using low temperature plasma evaporation processes. Within the same production step, the surface is cleaned and activated (e.g. by using an oxygen plasma) and afterwards coated. With the coating, either a compact polymer coating made out of a fluorine containing polymer is applied to the component, or a hydrophobic molecule is attached directly to the plastics of the component.

[0031] The advantages of the present invention are the following:

[0032] Due to the hydrophobic coatings, e.g. in the area of a battery compartment, the vulnerability to corrosion within an electronic smallest device, such as e.g. a medical device,

as in particular a hearing aid device, can be reduced by preventing the liquid to enter or can even be excluded completely.

[0033] The inventive process can be applied to products which already have been introduced on the market. The improvement of resistance against liquid penetration is even possible without the change of the design. A device can be equipped while in operation with components which are coated with a hydrophobic coating.

[0034] The intervals between maintenance operations due to contamination or corrosion can be expanded, which means the device does have longer life time durability.

[0035] At modular electronic devices, such as medical devices or hearing aid devices with many capillary crevices, the reduction or the prevention of water entrance is possible. As a consequence, complex mechanical sealing is not necessary anymore and the devices can be built in a smaller and less costly manner.

1. Process for the liquid impervious sealing of smallest crevices, chinks, capillaries and/or openings in walls of housings, where at least certain gas permeability has to be obtained, characterised in that the housing wall, at least in the area of the crevices, chinks, openings or capillaries, is provided with a hydrophobic coating.

2. Process according to claim 1 for the liquid impervious sealing of housing chambers, compartments, sections which are closed against the exterior and at which a certain gas exchange with the environment has to be guaranteed, characterised in that in the area of the chamber, the compartment or the section crevices, chinks, capillaries and the like which exist within the housing wall, are provided with a hydrophobic coating.

3. Process according to one of the claims **1** or **2**, characterised in that the housing or casing wall or its surface in the area of the crevices, chinks, capillaries or openings, shall be coated with hydrophobic nano-particles.

4. Process according to one of the claims **1**, **2** or **3**, characterised in that the hydrophobic coating, by using hydrophobic nano-particles, is produced by a so called Sol-Gel process.

5. Process according to one of the claims **1** or **2**, characterised in that the hydrophobic coating is achieved by coating of the housing wall with the aid of hydrated silanes or hydro-silicones or fluorine containing polycondensates.

6. Process according to one of the claims **1** or **2**, characterised in that the coating is executed by using a low temperature plasma evaporation process, the coating of a compact polymer layer is achieved by depositing a fluorine containing polymer on the housing wall.

7. Use of the process according to one of the claims 1 to 6 for the liquid impervious sealing of crevices, chinks or capillary openings in housing walls of electrical or electronic smallest devices, such as smallest devices in medicine, such as in particular hearing aid devices.

8. Use of the process according to one of the claims 1 to 6 for the liquid impervious sealing of a battery compartment in a hearing aid device.

9. Housing of electrical or electronic devices, containing crevices, capillary openings or chinks which have to be sealed against penetration of humidity but not against penetration of gas, characterised in that the housing wall in the area of the crevices, capillaries or chinks has a hydrophobic coating.

10. Housing according to claim 9, characterised in that the hydrophobic coating is such that the minimal contact angle to water at room temperature is at least 100° C.

11. Housing according to one of the claims **9** or **10**, characterised in that the hydrophobic coating has a layer thickness which is at least 5 micrometers.

12. Battery compartment of a hearing aid device, characterised in that at the area of the housing wall of the hearing aid device near to or at the battery compartment is provided with a hydrophobic coating.

* * * * *