US006207238B1

(12) **United States Patent**
Affinito

(10) **Patent No.: US 6,207,238 B1**
(45) **Date of Patent: *Mar. 27, 2001**

(54) **PLASMA ENHANCED CHEMICAL DEPOSITION FOR HIGH AND/OR LOW INDEX OF REFRACTION POLYMERS**

(75) Inventor: **John D. Affinito**, Kennewick, WA (US)

(73) Assignee: **Battelle Memorial Institute**, Richland, WA (US)

(*) Notice: This patent issued on a continued prosecution application filed under 37 CFR 1.53(d), and is subject to the twenty year patent term provisions of 35 U.S.C. 154(a)(2).

Subject to any disclaimer, the term of this patent is extended or adjusted under 35 U.S.C. 154(b) by 0 days.

(21) Appl. No.: **09/212,776**

(22) Filed: **Dec. 16, 1998**

(51) **Int. Cl.**[7] **H05H 1/24**

(52) **U.S. Cl.** **427/488**; 427/509; 427/512; 427/569; 427/398.1

(58) **Field of Search** 427/255.6, 255.23, 427/509, 488, 512, 569, 398.1

(56) **References Cited**

U.S. PATENT DOCUMENTS

3,475,307	10/1969	Knox et al. .
3,607,365	9/1971	Lindlof .
4,098,965	7/1978	Kinsman .
4,283,482	8/1981	Hattori et al. .

(List continued on next page.)

FOREIGN PATENT DOCUMENTS

704 297	2/1968	(BE) .
19603746	4/1997	(DE) .
0 340 935	11/1989	(EP) .
0 299 753	2/1993	(EP) .
0547 550	6/1993	(EP) .
0 590 467	4/1994	(EP) .
0 390 540	8/1994	(EP) .
0 722 787	7/1996	(EP) .
0 787 826	8/1997	(EP) .
0 916 394	5/1999	(EP) .
0 931 850	7/1999	(EP) .
0 977 469	2/2000	(EP) .
64-18441	1/1989	(JP) .
2-183230	7/1990	(JP) .
08325713	12/1996	(JP) .
09059763	3/1997	(JP) .
63136316	6/1998	(JP) .
WO 87 07848	12/1987	(WO) .
WO 95 10117	4/1995	(WO) .
WO 97 04885	2/1997	(WO) .
WO 97 22631	6/1997	(WO) .
WO 98 10116	3/1998	(WO) .
WO 98 18852	5/1998	(WO) .
WO 99 16557	4/1999	(WO) .
WO 99 16931	4/1999	(WO) .

OTHER PUBLICATIONS

G Gustafson, Y. Cao, G.M. Treacy, F. Klavetter, N. Colaneri, and A.J. Heeger, Nature, vol. 35, Jun. 11, 1992, pp. 477–479.

(List continued on next page.)

Primary Examiner—Shrive Beck
Assistant Examiner—Bret Chen
(74) *Attorney, Agent, or Firm*—Killworth, Gottman, Hagan & Schaeff, L.L.P.

(57) **ABSTRACT**

The method of the present invention for making a polymer layer with a selected index of refraction has the steps of (a) flash evaporating a monomer material capable of cross linking into a polymer with the selected index of refraction, forming an evaporate; (b) passing the evaporate to a glow discharge electrode creating a glow discharge monomer plasma from the evaporate; and (c) cryocondensing the glow discharge monomer plasma on a substrate and crosslinking the glow discharge monomer plasma thereon, wherein the crosslinking results from radicals created in the glow discharge monomer plasma and achieves self curing and forms a polymer having the selected index of refraction.

23 Claims, 4 Drawing Sheets

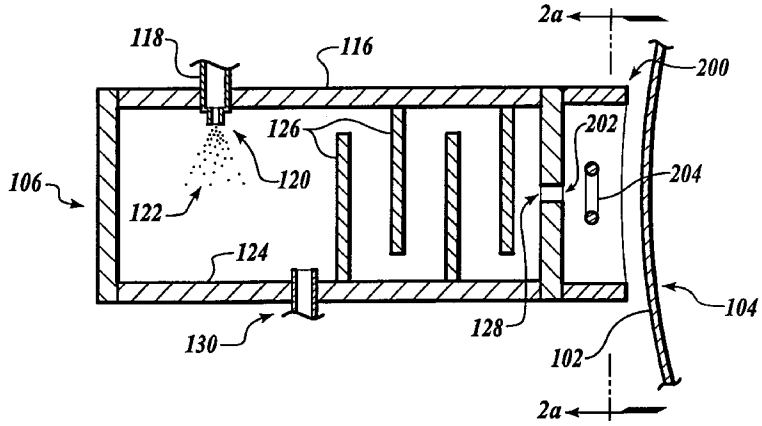

U.S. PATENT DOCUMENTS

4,581,337	*	4/1986	Frey et al.	436/533
4,624,867		11/1986	Iijima et al. .	
4,695,618		9/1987	Mowrer .	
4,842,893	*	6/1989	Yializis et al.	427/497
4,954,371	*	9/1990	Yializis	427/497
5,032,461		7/1991	Shaw et al. .	
5,237,439		8/1993	Misono et al. .	
5,260,095		11/1993	Affinito .	
5,354,497		10/1994	Fukuchi et al. .	
5,395,644		3/1995	Affinito .	
5,427,638		6/1995	Goetz et al. .	
5,440,446		8/1995	Shaw et al. .	
5,536,323		7/1996	Kirlin et al. .	
5,547,508		8/1996	Affinito .	
5,554,220		9/1996	Forrest et al. .	
5,576,101		11/1996	Saitoh et al. .	
5,607,789		3/1997	Treger et al. .	
5,620,524		4/1997	Fan et al. .	
5,629,389		5/1997	Roitman et al. .	
5,681,615	*	10/1997	Affinito et al.	427/255.6
5,681,666		10/1997	Treger et al. .	
5,684,084		11/1997	Lewin et al. .	
5,686,360		11/1997	Harvey, III et al. .	
5,693,956		12/1997	Shi et al. .	
5,711,816		1/1998	Kirlin et al. .	
5,725,909	*	3/1998	Shaw et al.	427/412.1
5,731,661		3/1998	So et al. .	
5,747,182		5/1998	Friend et al. .	
5,757,126		5/1998	Harvey, III et al. .	
5,759,329		6/1998	Krause et al. .	
5,792,550		8/1998	Phillips et al. .	
5,811,177		9/1998	Shi et al. .	
5,811,183		9/1998	Shaw et al. .	
5,821,692		10/1998	Rogers et al. .	
5,844,363		12/1998	Gu et al. .	
5,872,355		2/1999	Hueschen .	
5,902,641	*	5/1999	Affinito et al.	427/255.32
5,902,688		5/1999	Antoniadis et al. .	
5,904,958		5/1999	Dick et al. .	
5,912,069		6/1999	Yializis et al. .	
5,922,161		7/1999	Wu et al. .	
5,945,174		8/1999	Shaw et al. .	
5,948,552		9/1999	Antoniadis et al. .	
5,965,907		10/1999	Huang et al. .	
5,996,498		12/1999	Lewis .	
6,045,864		4/2000	Lyons et al. .	
6,083,628		7/2000	Yializis .	

OTHER PUBLICATIONS

J.D. Affinito, M.E. Gross, C.A. Coronado, G.L. Graff, E.N. Greenwall, and P.M. Martin, *Polymer–Oxide Transparent Barrier Layers Produced Using The PML Process*, 39th Annual Technical Conference Proceedings of the Society of Vacuum Coaters, Vacuum Web Coating Session, 1996, pp. 392–397.

J.D. Affinito, Stephan, Eufinger, M.E. Gross, G.L. Graff, and P.M. Martin, *PML/Oxide/PML Barrier Layer Performance Differences Arising From Use of UV or Electron Beam Polymerization of the PML Layers*, Thin Solid Films, vol. 308, 1997, pp. 19–25.

Affinito, J.D., et al., "Vacuum Deposition Of Polymer Electrolytes On Flexible Substrates", "Proceedings of the Ninth International Conference on Vacuum Web Coating", Nov. 1995 ed R. Bakish, Bakish Press 1995, pp. 20–36.

Vossen, J.L., et al., Thin Film Processes, Academic Press, 1978, Part II, Chapter II–1, Glow Discharge Sputter Deposition, p. 12–63; Part IV, Chapter IV–1 Plasma Deposition of Inorganic Compounds and Chapter IV–2 Glow Discharge Polymerization, p. 335–397.

Penning, F.M., Electrical Discharges in Gasses, Gordon and Breach Science Publishers, 1965, Chapters 5–6, p. 19–35, and Chapter 8, p. 41–50.

Affinito, J.D., et al., "High Rate Vacuum Deposition of Polymer Electrolytes", Journal Vacuum Science Technology A 14(3), May/Jun. 1996 No Page Numbers.

Inoue et al., Proc. Jpn. Congr. Mater. Res., vol. 33, pp. 177–9, 1990.

PCT International Search Report for International application No. PCT/US 99/30070 dated Sep. 5, 2000.

* cited by examiner

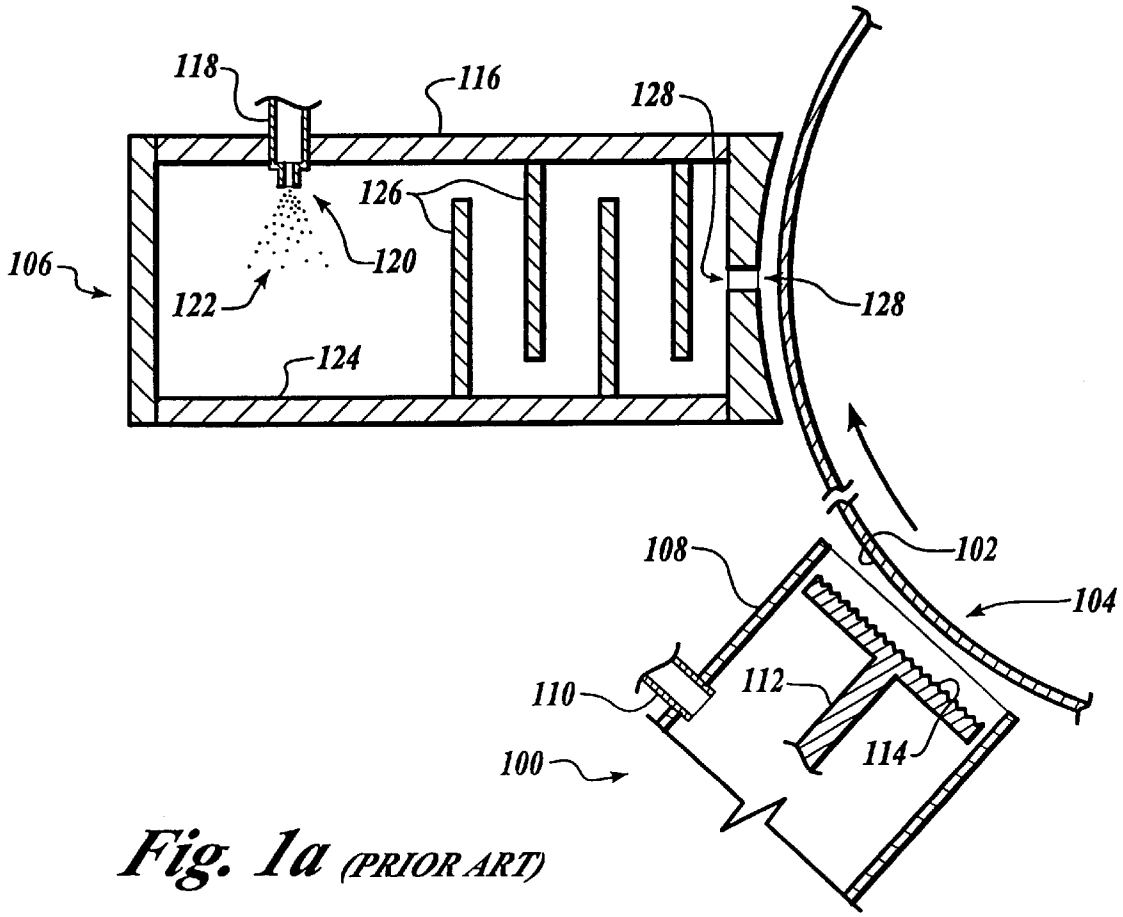

Fig. 1a (PRIOR ART)

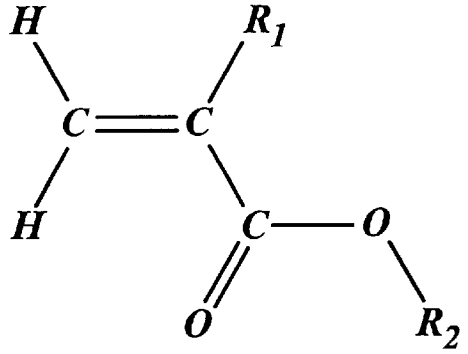

Fig. 1b (PRIOR ART)

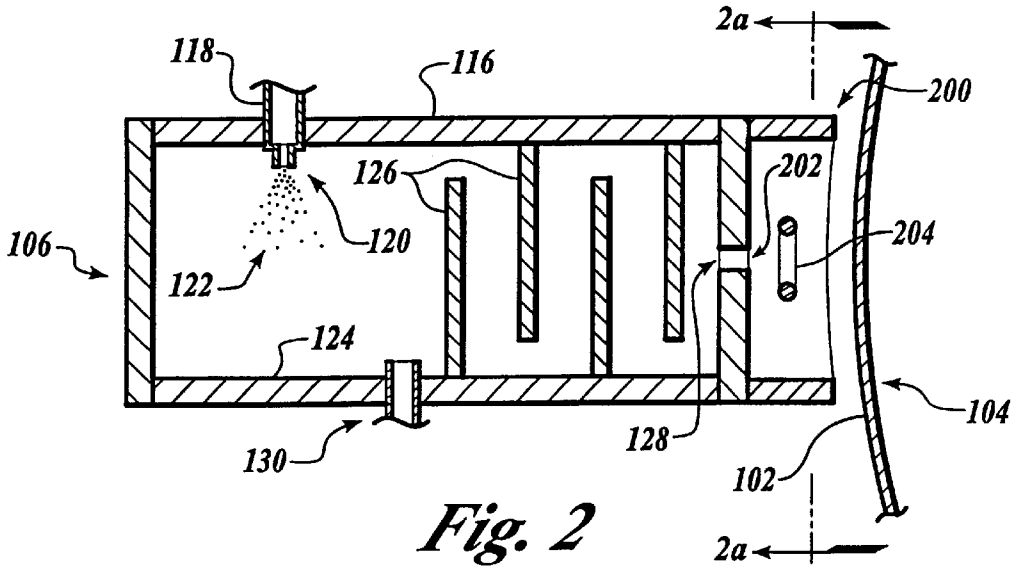

Fig. 2

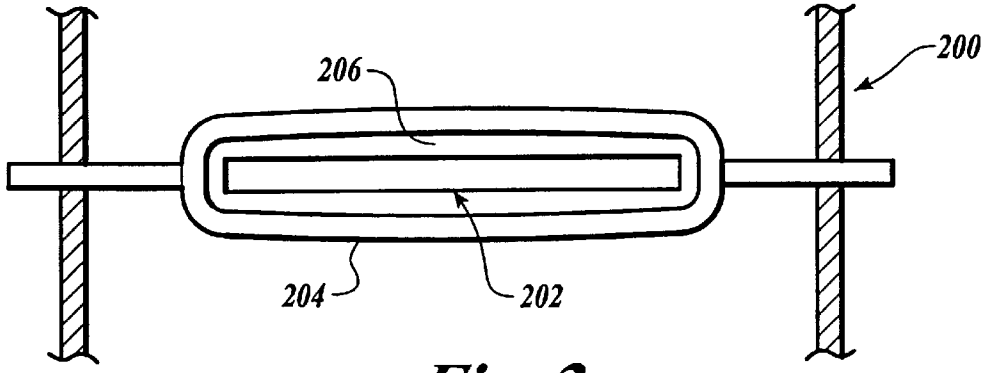

Fig. 2a

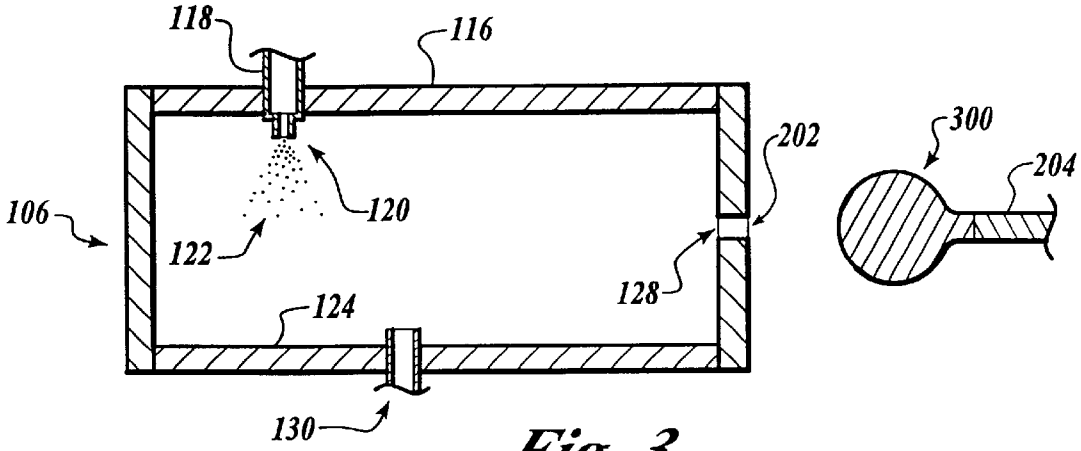

Fig. 3

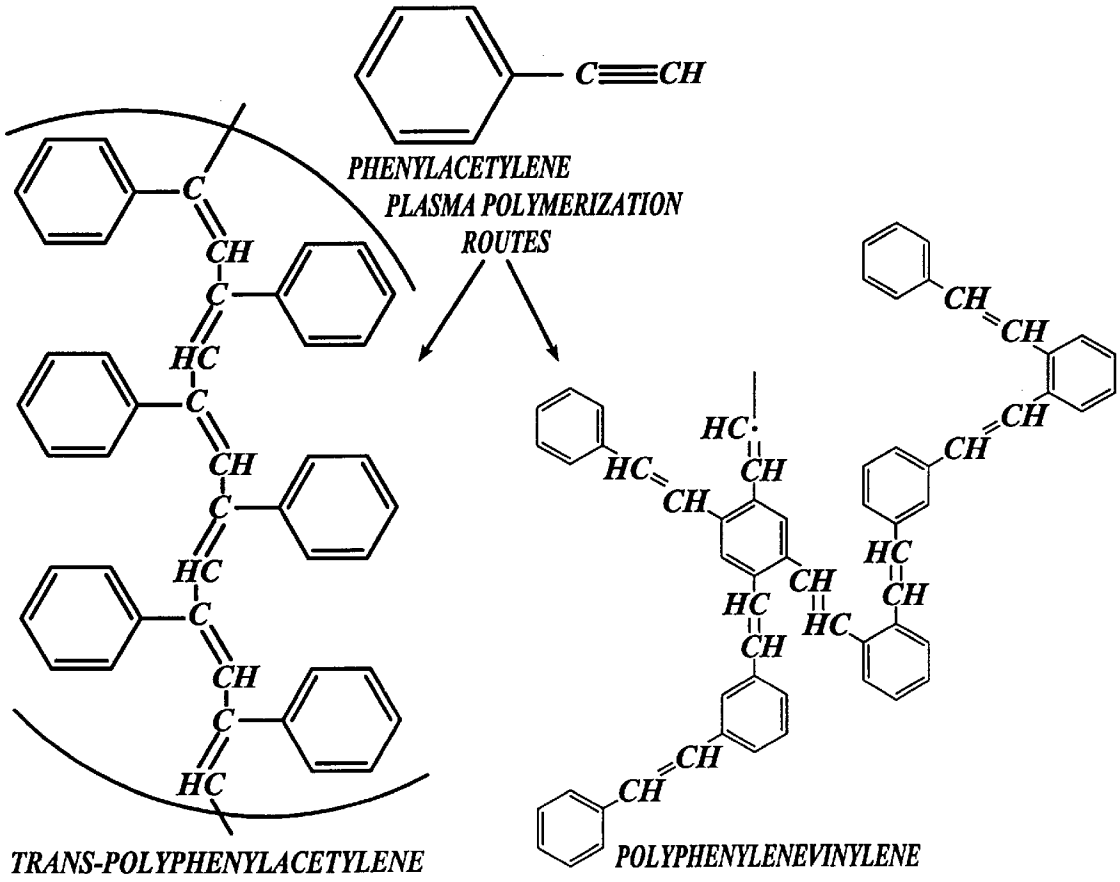

Fig. 4

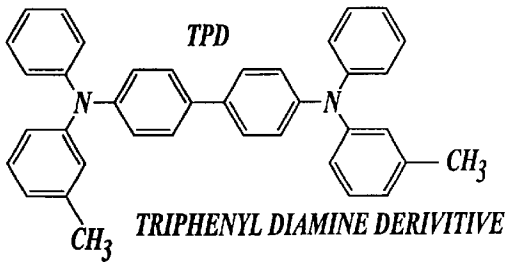

Fig. 5a

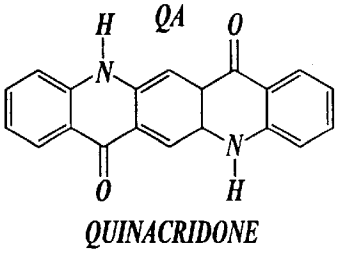

Fig. 5b

DIALLYLDIPHENYLSILANE
n=1.575

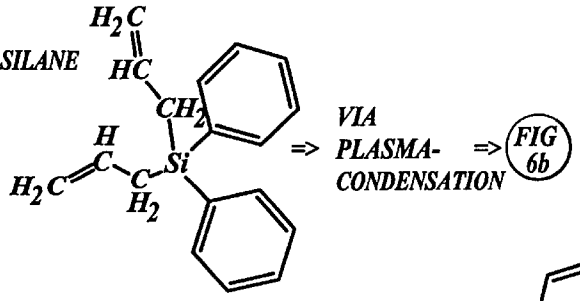

Fig. 6a

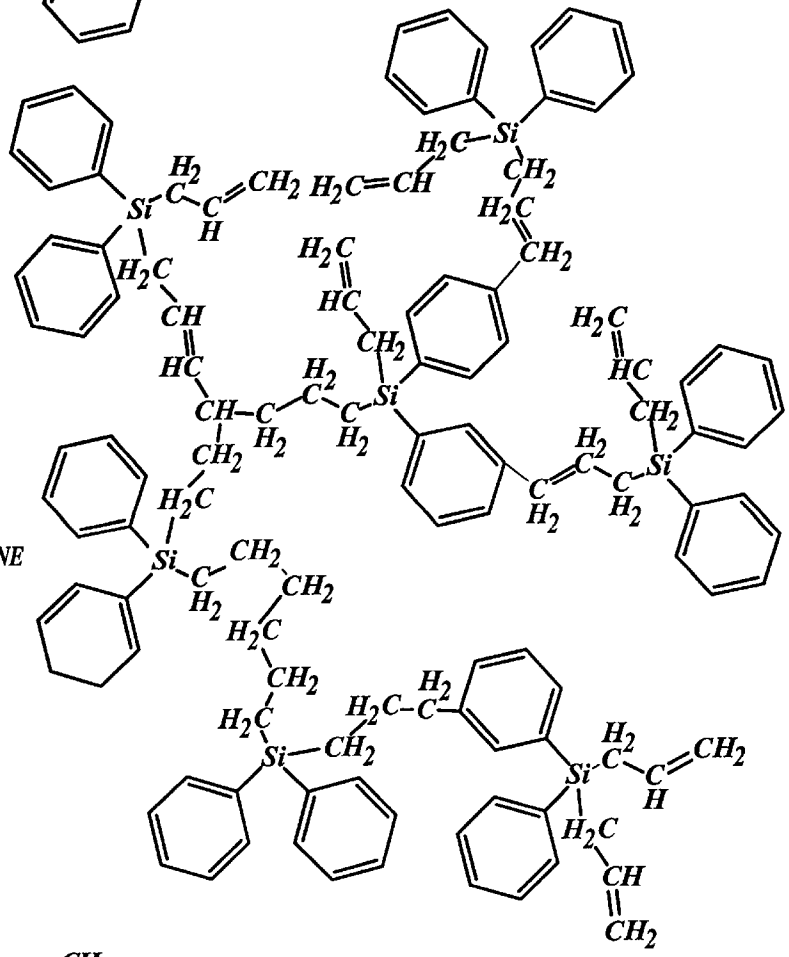

POLY-DIALLYLDIPHENYLSILANE
n ~ 1.6 - 1.65

Fig. 6b

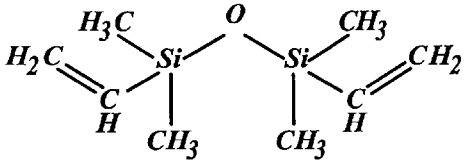

1,3-DIVINYLTETRAMETHYLDISILOXANE
n=1.4123

Fig. 7a

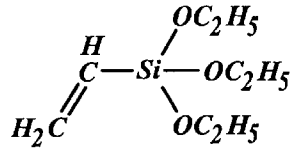

VINYLTRIETHOXYSILANE
n=1.396

Fig. 7b

PLASMA ENHANCED CHEMICAL DEPOSITION FOR HIGH AND/OR LOW INDEX OF REFRACTION POLYMERS

FIELD OF THE INVENTION

The present invention relates generally to a method of making plasma polymerized films having a specified index of refraction. More specifically, the present invention relates to selecting certain monomers to obtain a desired index of refraction of a plasma polymerized polymer film via plasma enhanced chemical deposition with a flash evaporated feed source of a low vapor pressure compound.

As used herein, the term "(meth)acrylic" is defined as "acrylic or methacrylic". Also, "(meth)acyrlate" is defined as "acrylate or methacrylate".

As used herein, the term "cryocondense" and forms thereof refers to the physical phenomenon of a phase change from a gas phase to a liquid phase upon the gas contacting a surface having a temperature lower than a dew point of the gas.

BACKGROUND OF THE INVENTION

The basic process of plasma enhanced chemical vapor deposition (PECVD) is described in THIN FILM PROCESSES, J. L. Vossen, W. Kern, editors, Academic Press, 1978, Part IV, Chapter IV-1 Plasma Deposition of Inorganic Compounds, Chapter IV-2 Glow Discharge Polymerization, herein incorporated by reference. Briefly, a glow discharge plasma is generated on an electrode that may be smooth or have pointed projections. Traditionally, a gas inlet introduces high vapor pressure monomeric gases into the plasma region wherein radicals are formed so that upon subsequent collisions with the substrate, some of the radicals in the monomers chemically bond or cross link (cure) on the substrate. The high vapor pressure monomeric gases include gases of CH_4, SiH_4, C_2H_6, C_2H_2, or gases generated from high vapor pressure liquid, for example styrene (10 torr at 87.4° F. (30.8° C.)), hexane (100 torr at 60.4° F. (15.8° C.)), tetramethyldisiloxane (10 torr at 82.9° F. (28.3° C.) 1,3,-dichlorotetra-methyldisiloxane) and combinations thereof that may be evaporated with mild controlled heating. Because these high vapor pressure monomeric gases do not readily cryocondense at ambient or elevated temperatures, deposition rates are low (a few tenths of micrometer/min maximum) relying on radicals chemically bonding to the surface of interest instead of cryocondensation. Remission due to etching of the surface of interest by the plasma competes with the reactive deposition. Lower vapor pressure species have not been used in PECVD because heating the higher molecular weight monomers to a temperature sufficient to vaporize them generally causes a reaction prior to vaporization, or metering of the gas becomes difficult to control, either of which is inoperative.

The basic process of flash evaporation is described in U.S. Pat. No. 4,954,371 herein incorporated by reference. This basic process may also be referred to as polymer multi-layer (PML) flash evaporation. Briefly, a radiation polymerizable and/or cross linkable material is supplied at a temperature below a decomposition temperature and polymerization temperature of the material. The material is atomized to droplets having a droplet size ranging from about 1 to about 50 microns. An ultrasonic atomizer is generally used. The droplets are then flash vaporized, under vacuum, by contact with a heated surface above the boiling point of the material, but below the temperature which would cause pyrolysis. The vapor is cryocondensed on a substrate then radiation polymerized or cross linked as a very thin polymer layer.

The material may include a base monomer or mixture thereof, cross-linking agents and/or initiating agents. A disadvantage of the flash evaporation is that it requires two sequential steps, cryocondensation followed by curing or cross linking, that are both spatially and temporally separate.

According to the state of the art of making plasma polymerized films, PECVD and flash evaporation or glow discharge plasma deposition and flash evaporation have not been used in combination. However, plasma treatment of a substrate using glow discharge plasma generator with inorganic compounds has been used in combination with flash evaporation under a low pressure (vacuum) atmosphere as reported in J. D. Affinito, M. E. Gross, C. A. Coronado, and P. M. Martin, A Vacuum Deposition Of Polymer Electrolytes On Flexible Substrates. "Paper for Plenary talk in A Proceedings of the Ninth International Conference on Vacuum Web Coating", November 1995 ed R. Bakish, Bakish Press 1995, pg 20–36, and as shown in FIG. 1*a*. In that system, the plasma generator **100** is used to etch the surface **102** of a moving substrate **104** in preparation to receive the monomeric gaseous output from the flash evaporation **106** that cryocondenses on the etched surface **102** and is then passed by a first curing station (not shown), for example electron beam or ultra-violet radiation, to initiate cross linking and curing. The plasma generator **100** has a housing **108** with a gas inlet **110**. The gas may be oxygen, nitrogen, water or an inert gas, for example argon, or combinations thereof. Internally, an electrode **112** that is smooth or having one or more pointed projections **114** produces a glow discharge and makes a plasma with the gas which etches the surface **102**. The flash evaporator **106** has a housing **116**, with a monomer inlet **118** and an atomizing nozzle **120**, for example an ultrasonic atomizer. Flow through the nozzle **120** is atomized into particles or droplets **122** which strike the heated surface **124** whereupon the particles or droplets **122** are flash evaporated into a gas that flows past a series of baffles **126** (optional) to an outlet **128** and cryocondenses on the surface **102**. Although other gas flow distribution arrangements have been used, it has been found that the baffles **126** provide adequate gas flow distribution or uniformity while permitting ease of scaling up to large surfaces **102**. A curing station (not shown) is located downstream of the flash evaporator **106**.

In all of these prior art methods, the starting monomer is a (meth)acrylate monomer (FIG. 1*b*). When R_1 is hydrogen (H), the compound is an acrylate and when R_1 is a methyl group (CH_3), the compound is a methacrylate.

It is known that the monomer composition may be varied to selectively obtain a desired refractive index. Acrylated or methacrylated hydrocarbon chain compositions provide indices of refraction tightly grouped about 1.5. Bisphenyl A diacrylate has an index of refraction of 1.53. Degree of conjugation (number of carbon to carbon double or triple bonds or aromatic rings) generally increases index of refraction. For example, polyvinylcarbizone has an index of refraction of 2.1 or higher. However, multi-ring system compounds that are solids are not useful as a monomer in these systems. Addition of bromine may increase index of refraction as high as 1.7. Addition of fluorine may reduce index of refraction to as low as 1.3. However, bromine adds a brown color and tends to oxidize over time and fluorinated monomers have high vapor pressures, poor adhesion and high cost.

Therefore, there is a need for an apparatus and method for making plasma polymerized polymer layers at a fast rate but that is also self curing, and with selective index of refraction.

SUMMARY OF THE INVENTION

The present invention is an improved method of plasma polymerization wherein a monomer capable of providing a

polymer with a desired index of refraction is cured during plasma polymerization.

The present invention may be (1) an apparatus and method for plasma enhanced chemical vapor deposition of low vapor pressure monomer or a mixture of monomer with particle materials onto a substrate, or (2) an apparatus and method for making self-curing polymer layers, especially self-curing PML polymer layers. From both points of view, the invention is a combination of flash evaporation with plasma enhanced chemical vapor deposition (PECVD) that provides the unexpected improvements of permitting use of low vapor pressure monomer materials in a PEDVD process and provides a self curing from a flash evaporation process, at a rate surprisingly faster than standard PECVD deposition rates.

Generally, the apparatus of the present invention is (a) a flash evaporation housing with a monomer atomizer for making monomer droplets, heated evaporation surface for making an evaporate from the monomer droplets, and an evaporate outlet, (b) a glow discharge electrode downstream of the evaporate outlet for creating a glow discharge plasma from the evaporate, wherein (c) the substrate is proximate the glow discharge plasma for receiving and cryocondensing the glow discharge plasma thereon. All components are preferably within a low pressure (vacuum) chamber.

The method of the present invention has the steps of (a) flash evaporating a liquid monomer an evaporate outlet forming an evaporate; (b) passing the evaporate to a glow discharge electrode creating a glow discharge monomer plasma from the evaporate; and (c) cryocondensing the glow discharge monomer plasma on a substrate and crosslinking the glow discharge monomer plasma thereon, wherein the crosslinking results from radicals created in the glow discharge plasma and achieves self curing.

It is an object of the present invention to provide a method of making a polymer with a selected index of refraction.

An advantage of the present invention is that it is insensitive to a direction of motion of the substrate because the deposited monomer layer is self curing. Another advantage of the present invention is that multiple layers of materials may be combined. For example, as recited in U.S. Pat. Nos. 5,547,508 and 5,395,644, 5,260,095, hereby incorporated by reference, multiple polymer layers, alternating layers of polymer and metal, and other layers may be made with the present invention in the vacuum environment.

The subject matter of the present invention is particularly pointed out and distinctly claimed in the concluding portion of this specification. However, both the organization and method of operation, together with further advantages and objects thereof, may best be understood by reference to the following detailed description in combination with the drawings wherein like reference characters refer to like elements.

BRIEF DESCRIPTION OF THE DRAWINGS

FIG. **1***a* is a cross section of a prior art combination of a glow discharge plasma generator with inorganic compounds with flash evaporation.

FIG. **1***b* is a chemical diagram of (meth)acrylate.

FIG. **2** is a cross section of the apparatus of the present invention of combined flash evaporation and glow discharge plasma deposition.

FIG. **2***a* is a cross section end view of the apparatus of the present invention.

FIG. **3** is a cross section of the present invention wherein the substrate is the electrode.

FIG. **4** is a chemical diagram of phenylacetylene and two plasma polymerization routes from phenylacetylene to conjugated polymer.

FIG. **5***a* is a chemical diagram of triphynyl diamine derivitive

FIG. **5***b* is a chemical diagram of quinacridone

FIG. **6***a* is a chemical diagram of diallyldiphenylsilane

FIG. **6***b* is a chemical diagram of polydiallylphenylsilane

FIG. **7***a* is a chemical diagram of divinyltetramethyldisiloxane

FIG. **7***b* is a chemical diagram of vinyltriethoxysilane

DESCRIPTION OF THE PREFERRED EMBODIMENT(S)

According to the present invention, the apparatus is shown in FIG. **2**. The apparatus and method of the present invention are preferably within a low pressure (vacuum) environment or chamber. Pressures preferably range from about 10^{-1} torr to 10^{-6} torr. The flash evaporator **106** has a housing **116**, with a monomer inlet **118** and an atomizing nozzle **120**. Flow through the nozzle **120** is atomized into particles or droplets **122** which strike the heated surface **124** whereupon the particles or droplets **122** are flash evaporated into a gas or evaporate that flows past a series of baffles **126** to an evaporate outlet **128** and cryocondenses on the surface **102**. Cryocondensation on the baffles **126** and other internal surfaces is prevented by heating the baffles **126** and other surfaces to a temperature in excess of a cryocondensation temperature or dew point of the evaporate. Although other gas flow distribution arrangements have been used, it has been found that the baffles **126** provide adequate gas flow distribution or uniformity while permitting ease of scaling up to large surfaces **102**. The evaporate outlet **128** directs gas toward a glow discharge electrode **204** creating a glow discharge plasma from the evaporate. In the embodiment shown in FIG. **2**, the glow discharge electrode **204** is placed in a glow discharge housing **200** having an evaporate inlet **202** proximate the evaporate outlet **128**. In this embodiment, the glow discharge housing **200** and the glow discharge electrode **204** are maintained at a temperature above a dew point of the evaporate. By controlling a glow discharge parameter of power, voltage or a combination thereof, multiple carbon carbon bonds (double, triple or radical bonds) of the molecules within the evaporate are altered (usually broken to a lower number bond) thereby obtaining a faster reaction rate than for molecules having only single bonds.

The glow discharge plasma exits the glow discharge housing **200** and cryocondenses on the surface **102** of the substrate **104**. It is preferred that the substrate **104** is kept at a temperature below a dew point of the evaporate, preferably ambient temperature or cooled below ambient temperature to enhance the cryocondensation rate. In this embodiment, the substrate **104** is moving and may be electrically grounded, electrically floating, or electrically biased with an impressed voltage to draw charged species from the glow discharge plasma. If the substrate **104** is electrically biased, it may even replace the electrode **204** and be, itself, the electrode which creates the glow discharge plasma from the monomer gas. Electrically floating means that there is no impressed voltage although a charge may build up due to static electricity or due to interaction with the plasma.

A preferred shape of the glow discharge electrode **204**, is shown in FIG. **2***a*. In this preferred embodiment, the glow discharge electrode **204** is separate from the substrate **104**

and shaped so that evaporate flow from the evaporate inlet **202** substantially flows through an electrode opening **206**. Any electrode shape can be used to create the glow discharge, however, the preferred shape of the electrode **204** does not shadow the plasma from the evaporate issuing from the outlet **202** and its symmetry, relative to the monomer exit slit **202** and substrate **104**, provides uniformity of the evaporate vapor flow to the plasma across the width of the substrate while uniformity transverse to the width follows from the substrate motion.

The spacing of the electrode **204** from the substrate **104** is a gap or distance that permits the plasma to impinge upon the substrate. This distance that the plasma extends from the electrode will depend on the evaporate species, electrode **204**/substrate **104** geometry, electrical voltage and frequency, and pressure in the standard way as described in detail in ELECTRICAL DISCHARGES IN GASSES, F. M. Penning, Gordon and Breach Science Publishers, 1965, and summarized in THIN FILM PROCESSES, J. L. Vossen, W. Kern, editors, Academic Press, 1978, Part II, Chapter II-**1**, Glow Discharge Sputter Deposition, both hereby incorporated by reference.

An apparatus suitable for batch operation is shown in FIG. **3**. In this embodiment, the glow discharge electrode **204** is sufficiently proximate a part **300** (substrate) that the part **300** is an extension of or part of the electrode **204**. Moreover, the part is below a dew point to allow cryocondensation of the glow discharge plasma on the part **300** and thereby coat the part **300** with the monomer condensate and self cure into a polymer layer. Sufficiently proximate may be connected to, resting upon, in direct contact with, or separated by a gap or distance that permits the plasma to impinge upon the substrate. This distance that the plasma extends from the electrode will depend on the evaporate species, electrode **204**/substrate **104** geometry, electrical voltage and frequency, and pressure in the standard way as described in ELECTRICAL DISCHARGES IN GASSES, F. M. Penning, Gordon and Breach Science Publishers, 1965, hereby incorporated by reference. The substrate **300** may be stationary or moving during cryocondensation. Moving includes rotation and translation and may be employed for controlling the thickness and uniformity of the monomer layer cryocondensed thereon. Because the cryocondensation occurs rapidly, within milli-seconds to seconds, the part may be removed after coating and before it exceeds a coating temperature limit.

In operation, either as a method for plasma enhanced chemical vapor deposition of low vapor pressure materials onto a substrate, or as a method for making self-curing polymer layers (especially PML), the method of the invention has the steps of (a) flash evaporating a material forming an evaporate; (b) passing the evaporate to a glow discharge electrode creating a glow discharge monomer plasma from the evaporate; and (c) cryocondensing the glow discharge monomer plasma on a substrate and crosslinking the glow discharge monomer plasma thereon. The crosslinking results from radicals created in the glow discharge plasma thereby permitting self curing.

The flash evaporating has the steps of flowing a monomer material to an inlet, atomizing the material through a nozzle and creating a plurality of monomer droplets of the monomer liquid as a spray. The spray is directed onto a heated evaporation surface whereupon it is evaporated and discharged through an evaporate outlet.

The evaporate is directed to a glow discharge that is controlled to alter material bonds to obtain a polymer with a desired index of refraction upon condensation and curing.

The liquid material may be any liquid monomer. However, it is preferred that the liquid monomer or liquid have a low vapor pressure at ambient temperatures so that it will readily cryocondense. Preferably, the vapor pressure of the liquid monomer material is less than about 10 torr at 83° F. (28.3° C.), more preferably less than about 1 torr at 83° F. (28.3° C.), and most preferably less than about 10 millitorr at 83° F. (28.3° C.). For monomers of the same chemical family, monomers with low vapor pressures usually also have higher molecular weight and are more readily cryocondensible than higher vapor pressure, lower molecular weight monomers. Liquid monomer includes but is not limited to (meth)acrylate, halogenated alkane, phenylacetylene (FIG. **4**) and combinations thereof. Monomers with aromatic rings or monomers with multiple (double or triple) bonds (including conjugated monomer or particle) react faster than monomers with only single bonds.

The particle(s) may be any insoluble or partially insoluble particle type having a boiling point below a temperature of the heated surface in the flash evaporation process. Insoluble particle includes but is not limited to triphenyl diamine derivative (TPD, FIG. **5***a*), quinacridone (QA, FIG. **5***b*) and combinations thereof. The insoluble particles are preferably of a volume much less than about 5000 cubic micrometers (diameter about 21 micrometers) or equal thereto, preferably less than or equal to about 4 cubic micrometers (diameter about 2 micrometers). In a preferred embodiment, the insoluble particles are sufficiently small with respect to particle density and liquid monomer density and viscosity that the settling rate of the particles within the liquid monomer is several times greater than the amount of time to transport a portion of the particle liquid monomer mixture from a reservoir to the atomization nozzle. It is to be noted that it may be necessary to stir the particle liquid monomer mixture in the reservoir to maintain suspension of the particles and avoid settling.

The mixture of monomer and insoluble or partially soluble particles may be considered a slurry, suspension or emulsion, and the particles may be solid or liquid. The mixture may be obtained by several methods. One method is to mix insoluble particles of a specified size into the monomer. The insoluble particles of a solid of a specified size may be obtained by direct purchase or by making them by one of any standard techniques, including but not limited to milling from large particles, precipitation from solution, melting/spraying under controlled atmospheres, rapid thermal decomposition of precursors from solution as described in U.S. Pat. No. 5,652,192 hereby incorporated by reference. The steps of U.S. Pat. No. 5,652,192 are making a solution of a soluble precursor in a solvent and flowing the solution through a reaction vessel, pressurizing and heating the flowing solution and forming substantially insoluble particles, then quenching the heated flowing solution and arresting growth of the particles. Alternatively, larger sizes of solid material may be mixed into liquid monomer then agitated, for example ultrasonically, to break the solid material into particles of sufficient size.

Liquid particles may be obtained by mixing an immiscible liquid with the monomer liquid and agitating by ultrasonic or mechanical mixing to produce liquid particles within the liquid monomer. Immiscible liquids include, for example phenylacetylene.

Upon spraying, the droplets may be particles alone, particles surrounded by liquid monomer and liquid monomer alone. Since both the liquid monomer and the particles are evaporated, it is of no consequence either way. It is, however, important that the droplets be sufficiently small

that they are completely vaporized. Accordingly, in a preferred embodiment, the droplet size may range from about 1 micrometer to about 50 micrometers.

Materials useful for selective index of refraction (n) include but are not limited to aromatic ring compounds. For example, high index of refraction material may be obtained from lower index of refraction material as in the plasma alteration of diallyldiphenylsilane (n=1.575) (FIG. **6***a*) to polydiallylphenylsilane (1.6<n<1.65) (FIG. **6***b*). Alternatively, a lower index of refraction material may be made from a higher index of refraction material by plasma alteration of 1,3-divinyltetramethyldisiloxane (n=1.412) (FIG. **7***a*) to vinyltriethoxysilane (n=1.396) (FIG. **7***b*).

A material that is solid may be suspended in a liquid monomer wherein the material cross links into the liquid monomer to alter the index of refraction. Specifically, for example bi-phenyl may be suspended in any of the herein mentioned liquid monomers (conjugated or not), resulting in phenyl, or multi-phenyl including but not limited to bi-phenyl, tri-phenyl and combinations thereof, which are cross linked molecules that increase the index of refraction compared to polymerizing the liquid monomer alone.

Halogenated alkyl compounds may be useful for obtaining a selected index of refraction. Halogens include but are not limited to fluorine, bromine and combinations thereof.

By using flash evaporation, the material is vaporized so quickly that reactions that generally occur from heating a liquid material to an evaporation temperature simply do not occur. Further, control of the rate of evaporate delivery is strictly controlled by the rate of material delivery to the inlet **118** of the flash evaporator **106**.

In addition to the evaporate from the material, additional gases may be added within the flash evaporator **106** through a gas inlet **130** upstream of the evaporate outlet **128**, preferably between the heated surface **124** and the first baffle **126** nearest the heated surface **124**. Additional gases may be organic or inorganic for purposes included but not limited to ballast, reaction and combinations thereof. Ballast refers to providing sufficient molecules to keep the plasma lit in circumstances of low evaporate flow rate. Reaction refers to chemical reaction to form a compound different from the evaporate. Additional gases include but are not limited to group VIII of the periodic table, hydrogen, oxygen, nitrogen, chlorine, bromine, polyatomic gases including for example carbon dioxide, carbon monoxide, water vapor, and combinations thereof.

Alternative Embodiments

The method of the present invention may obtain a polymer layer either by radiation curing or by self curing. In radiation curing (FIG. **1**), the monomer liquid may include a photoinitiator. In self curing, a combined flash evaporator, glow discharge plasma generator is used without either the e-beam gun or ultraviolet light.

Closure

While a preferred embodiment of the present invention has been shown and described, it will be apparent to those skilled in the art that many changes and modifications may be made without departing from the invention in its broader aspects. The appended claims are therefore intended to cover all such changes and modifications as fall within the true spirit and scope of the invention.

I claim:

1. A method of making a polymer layer having a selected index of refraction, the method using plasma enhanced chemical vapor deposition onto a substrate in a vacuum environment, comprising the steps of:

(a) providing a monomer cross linkable into a polymer with said selected index of refraction;

(b) making an evaporate by receiving a plurality of monomer particles as a spray into a flash evaporation housing, evaporating said monomer on an evaporation surface, and discharging said evaporate through an evaporate outlet;

(c) making a monomer plasma from said evaporate by passing said evaporate proximate a glow discharge electrode and creating a glow discharge; and

(d) cryocondensing said monomer plasma onto said substrate and crosslinking said monomer plasma thereon, forming said polymer layer having said selected index of refraction.

2. The method as recited in claim **1**, wherein the substrate is proximate the glow discharge electrode, is electrically biased with an impressed voltage, and receives said monomer plasma cryocondensing thereon.

3. The method as recited in claim **1**, wherein said glow discharge electrode is positioned within a glow discharge housing having an evaporate inlet proximate the evaporate outlet, said glow discharge housing and said glow discharge electrode maintained at a temperature above a dew point of said evaporate and said substrate is downstream of said monomer plasma, is electrically floating, and receives said monomer plasma cryocondensing thereon.

4. The method as recited in claim **1**, wherein the substrate is proximate the glow discharge electrode, is electrically grounded, and receives said monomer plasma cryocondensing thereon.

5. The method as recited in claim **1**, wherein said monomer is selected from the group consisting of halogenated alkyl, diallyldiphenylsilane, 1,3-divinyltetramethyldisiloxane, phenylacetylene, acrylate, methacrylate, and combinations thereof.

6. The method as recited in claim **1**, wherein said substrate is cooled.

7. The method as recited in claim **1**, further comprising adding an additional gas.

8. The method as recited in claim **7**, wherein said additional gas is a ballast gas.

9. The method as recited in claim **7**, wherein said additional gas is a reaction gas.

10. The method as recited in claim **9**, wherein said reaction gas is oxygen gas.

11. The method as recited in claim **1**, further comprising particles selected from the group consisting of organic solids, liquids, and combinations thereof.

12. The method as recited in claim **11**, wherein the organic solids are selected from the group consisting of biphenyl, triphenyl diamine derivitive, quinacridone, and combinations thereof.

13. A method for making a polymer layer of a polymer with a selected index of refraction in a vacuum chamber, comprising the steps of:

(a) flash evaporating a monomer material capable of cross linking into said polymer with said selected index of refraction, forming an evaporate;

(b) passing said evaporate to a glow discharge electrode creating a glow discharge monomer plasma from said evaporate;

(c) cryocondensing said glow discharge monomer plasma on a substrate and crosslinking said glow discharge plasma thereon, said crosslinking resulting from radicals created in said glow discharge plasma for self curing and forming said polymer layer having said selected index of refraction.

14. The method as recited in claim **13**, wherein the substrate is proximate the glow discharge electrode, is electrically biased with an impressed voltage, and receives said monomer plasma cryocondensing thereon.

15. The method as recited in claim **13**, wherein said glow discharge electrode is positioned within a glow discharge housing having an evaporate inlet proximate the evaporate outlet, said glow discharge housing and said glow discharge electrode maintained at a temperature above a dew point of said evaporate, and said substrate is downstream of said monomer plasma, is electrically floating, and receives said monomer plasma cryocondensing thereon.

16. The method as recited in claim **13**, wherein the substrate is proximate the glow discharge electrode, is electrically grounded, and receives said monomer plasma cryocondensing thereon.

17. The method as recited in claim **13**, wherein said monomer material is a conjugated monomer.

18. The method as recited in claim **13**, wherein said monomer material is selected from the group consisting of diallyldiphenylsilane, 1,3-divinyltetramethyldisiloxane, phenylacetylene, acrylate, methacrylate and combinations thereof.

19. The method as recited in claim **13**, wherein said substrate is cooled.

20. The method as recited in claim **13**, wherein said monomer material is a monomer containing particles.

21. The method as recited in claim **20**, wherein said monomer is a conjugated monomer.

22. The method as recited in claim **20**, wherein said particles are selected from the group consisting of organic solids, liquids, and combinations thereof.

23. The method as recited in claim **22**, wherein the organic solids are selected from the group consisting of biphenyl, triphenyl diamine derivitive, quinacridone, and combinations thereof.

* * * * *

UNITED STATES PATENT AND TRADEMARK OFFICE

CERTIFICATE OF CORRECTION

PATENT NO. : 6,207,238 B1
DATED : March 27, 2001
INVENTOR(S) : John D. Affinito

It is certified that error appears in the above-identified patent and that said Letters Patent is hereby corrected as shown below:

Column 7,
Line 9, "(1.6<n< 1.65" should be -- (1.6≤n≤1.65) --

Signed and Sealed this

Fifth Day of November, 2002

Attest:

Attesting Officer

JAMES E. ROGAN
Director of the United States Patent and Trademark Office