Exhibit No. 1003

UNITED STATES PATENT AND TRADEMARK OFFICE

BEFORE THE PATENT TRIAL AND APPEAL BOARD

JEISYS MEDICAL INC. AND ILOODA CO., LTD.,
Petitioners

v.

SERENDIA, LLC
Patent Owner

U.S. Patent No. 9,775,774
Filed: April 12, 2016
Issued: October 3, 2017
Inventor: Jongju Na

TITLE: METHOD, SYSTEM, AND APPARATUS
FOR DERMATOLOGICAL TREATMENT

Inter Partes Review No. IPR2024-00383

DECLARATION OF DANY BÉRUBÉ IN SUPPORT OF PETITION FOR *INTER PARTES* REVIEW OF U.S. PATENT NO. 9,775,774

TABLE OF CONTENTS

I. INTRODUCTION 1
II. QUALIFICATIONS AND PROFESSIONAL BACKGROUND 1
III. INFORMATION CONSIDERED 7
IV. LEGAL STANDARDS 7
A. Level of Ordinary Skill in the Art 8
B. Claim Construction 8
C. Anticipation 9
D. Obviousness 9
E. Priority and Written Description 12
V. FIELD OF TECHNOLOGY AND STATE OF THE ART 12
A. Microneedling Devices in the Aesthetics Industry 13
B. Use of Disposable Needles in Microneedling Devices 14
C. Fine Control of Microneedle Insertion Depth 14
VI. THE ’774 PATENT 15
A. Overview of the ’774 Patent 15
B. Priority date of the claims of the ’774 Patent 19
C. The Prosecution History 22
D. The Challenged Claims of the ’774 Patent 23
VII. LEVEL OF ORDINARY SKILL IN THE ART 23
VIII. CONSTRUCTION OF CLAIM TERMS 24
A. Agreed Constructions From The ITC Investigation 25
B. “a desired distance” 25
C. Other Claim Terms 28
IX. OVERVIEW OF THE PRIOR ART 28
A. Mehta (EX1004) 28
B. Na ’848 (EX1005) 31
C. Lee (EX1010, EX1011) 32

X. THE CHALLENGED CLAIMS ARE UNPATENTABLE.....34
A. Ground 1: Claims 1–7 and 9–18 are Anticipated by Mehta 34
1. Independent Claim 1.....34
2. Dependent Claim 2 57
3. Dependent Claim 3 62
4. Dependent Claim 4 63
5. Dependent Claim 5 66
6. Dependent Claim 6 70
7. Dependent Claim 7 71
8. Dependent Claim 9 73
9. Dependent Claim 10 75
10. Independent Claim 11.....76
11. Dependent Claim 12 78
12. Dependent Claim 13 79
13. Dependent Claim 14 79
14. Dependent Claim 15 79
15. Dependent Claim 16 80
16. Dependent Claim 17 80
17. Dependent Claim 18 80
B. Ground 2: Claims 8 and 19–20 are Obvious over Mehta and Na ’848 81
1. Motivation to Combine Mehta and Na ’848 81
2. Dependent Claim 8 87
3. Dependent Claim 19 88
4. Dependent Claim 20 89
C. Ground 3: Claims 1, 5–11 and 15–20 are Obvious over Na ’848 in view of Mehta.....90
1. Motivation to Combine Na ’848 and Mehta 90
2. Independent Claim 1.....98
3. Dependent Claim 5 101

4. Dependent Claim 6 103
5. Dependent Claim 7 104
6. Dependent Claim 8 105
7. Dependent Claim 9 107
8. Dependent Claim 10 108
9. Independent Claim 11 109
10. Dependent Claim 15 112
11. Dependent Claim 16 112
12. Dependent Claim 17 113
13. Dependent Claim 18 113
14. Dependent Claim 19 114
15. Dependent Claim 20 114
D. Ground 4: Claims 1–7 and 9–18 are obvious over Mehta and Lee ..115
1. Motivation to Combine Mehta and Lee 115
2. Claims 1-7 and 9-18 126
E. Ground 5: Claims 8, 19, and 20 are Obvious over Mehta, Lee and Na ’848 128
1. Motivation to Combine Mehta, Lee and Na ’848 128
2. Claims 8, 19, and 20 128
XI. ACKNOWLEDGMENTS 129

I, Dany Bérubé, Ph.D., declare as follows:

I. INTRODUCTION

1. I have been retained by Jeisys Medical, Inc. ("Jeisys") and Ilooda Co., Ltd. ("Ilooda") (collectively, "Petitioners") as a technical expert in connection with a petition for *inter partes* review ("IPR") of U.S. Patent No. 9,775,774 ("the '774 patent," EX1001). I understand that the '774 patent is assigned to Serendia, LLC ("Serendia" or "Patent Owner").

2. I have been asked, by counsel for Petitioners, to provide opinions based on my experience with and expertise in skin treatment technologies for the aesthetics industry. In particular, I have been asked to offer opinions regarding the patentability of claims 1–20 of the '774 patent (the "challenged claims") in view of certain prior art references and the knowledge of a person of ordinary skill in the art ("POSA").

3. I am being compensated for my time in this matter at an hourly rate. I am also being reimbursed for reasonable and customary expenses associated with my work and testimony in this matter. My compensation is not contingent on the outcome of this matter or the specifics of my testimony. I have no personal or financial stake or interest in the outcome of the present proceeding.

II. QUALIFICATIONS AND PROFESSIONAL BACKGROUND

4. My qualifications and professional experience are described in my curriculum vitae, a copy of which is provided herewith as Appendix A. The

following is a brief summary of my relevant qualifications and professional experience.

5. I received a Bachelor's Degree in Engineering Physics from the Université Laval in 1993 and a Doctor of Philosophy in Biomedical Engineering from the École Polytechnique de Montréal in 1998. For my Ph.D. thesis, I developed and characterized ablation systems for treating cardiac arrhythmias with microwave frequency electromagnetic energy. The aim of my study was to overcome known issues and limitations with then current and traditional radiofrequency ablation systems.

6. During my studies, I received numerous Scholarships and Awards. I received a High Distinction for my Ph.D. thesis from the École Polytechnique de Montréal. My thesis was selected as a top three best thesis of the year. I received scholarships from the Canadian government during my Ph.D. and undergraduate studies, and from the government of Quebec during my Master studies. I was selected as member of the Table of Honor during my undergraduate engineering studies.

7. I have worked in the area of biomedical engineering for over 25 years and have extensive experience with the application of electromagnetic radiation, e.g. radiofrequency energy, and ultrasonic energy to biological tissues for the treatment of medical conditions. I have experience with the research and development of

medical devices, the use of Finite Elements Analysis to model interactions with biological tissue, and the use of RF and other energy modalities for the treatment of skin. I have written and published peer-reviewed articles on RF microneedling technology, science, and clinical results. In particular, I published a peer-reviewed article characterizing the thermodynamic aspects of collagen denaturation and its influence on clinical results for the treatment of facial wrinkles and skin laxity.

8. I worked in the cardiovascular space from 1998 to 2008. During that time, I developed the first surgical microwave ablation system to treat stand-alone atrial fibrillation (AF) on a beating heart without cardio-pulmonary bypass, using thoracoscopic or robotic access. I also worked with cardiac surgeons to develop the technical aspects of the surgical procedure and published several technical and clinical papers, as well as abstracts.

9. In 2008, I began working in the aesthetics industry. From 2008 to 2020, I worked as Vice President of Research and Development (Profound Division) and as Vice President of Global Business Development and Strategy for Candela Medical (f/k/a Syneron) and for Primaeva Medical before its acquisition by Syneron. I led the development of the company's bipolar RF microneedling technology (called "Profound") from inception to commercial release. The Profound product (which was also known by other names, including Renesis, Miratone, and ePrime) was the first FDA-cleared bipolar RF microneedling system. During my tenure, I

managed all products and software updates and developed and implemented an IP portfolio related to the Profound technology. I acted as a hands-on scientist and performed Finite Element Analysis to model various radiofrequency, laser, and cryoablation system interactions with biological tissues in order to investigate and/or improve treatment concepts. I also served as an "in-house expert" for Profound, traveling around the world to meet and train physicians and distributors on the features and advantages related to the Profound science and technology.

10. After leaving Candela Medical in 2020, I took the position of Vice President of Scientific Affairs and Innovations with Sofwave Medical, which I held from July 2021 to August 2023. In that position, I identified and developed strategies and products aimed at addressing existing and new market opportunities in the area of skin treatment technology in the aesthetic industry. In addition, I developed the company's intellectual property portfolio, including IP related to the company's skin treatment technology. While working for Sofwave Medical, I performed finite element analyses (FEA) to model tissue heating for skin treatment devices for the treatment of wrinkles and skin laxity in the aesthetic industry using different energy types, including ultrasound and radiofrequency (RF). I have also used FEA to model various competitive devices such as RF microneedling devices. I have extensive experience in thermal analysis, acoustic, RF, microwave, laser, and cryoablation modeling. I also have experience in using and reviewing histology results.

11. In August 2023, I assumed my current position as the Vice President of Advanced Research and Innovations for Lutronic Aesthetic, Inc., where I am responsible for high-level product strategy, for scientific aspects related to product development, and for intellectual property protection. I regularly deliver Proof-of-Feasibility studies for early innovative concepts and provide Scientific input during all product development phases.

12. In the past five years, I have testified, either at trial or by deposition, in the following matters:

- U.S. International Trade Commission: *In the Matter of Certain Radio Frequency Micro-Needle Dermatological Treatment Devices and Components Thereof*, Inv. No. 337-TA-112.
- U.S. International Trade Commission: *In the Matter of Certain Dermatological Treatment Devices and Components Thereof*, Inv. No. 337-TA-1356, with respect to patents related to the '774 patent. [1]

13. I am a named inventor on a number of patents, including the following:

- *End-firing microwave ablation instrument with horn reflection device* (U.S. Patent No. 6,287,302).
- *Microwave ablation instrument with insertion probe* (U.S. Patent No. 6,325,796).

[1] Hereinafter referred to as the "ITC investigation."

- *Microwave ablation instrument with a directional radiation pattern* (U.S. Patent No. 6,471,696).
- *Flexible device for ablation of biological tissue* (U.S. Patent No. 6,817,999).
- *Ablation instrument having a flexible distal portion* (U.S. Patent No. 6,893,436).
- *Microwave ablation instrument with insertion probe* (U.S. Patent No. 6,962,586).
- *Catheter having improved steering* (U.S. Patent No. 7,099,717).
- *Microwave ablation instrument with flexible antenna assembly and method* (U.S. Patent No. 7,301,131).
- *Method of positioning a medical instrument* (U.S. Patent No. 7,303,560).
- *Monopole tip for ablation catheter* (U.S. Patent No. 7,346,399).
- *Vacuum-assisted securing apparatus for a microwave ablation instrument* (U.S. Patent No. 7,387,627).
- *Electrode arrangement for use in a medical instrument* (U.S. Patent No. 7,393,352).
- *Apparatus and method for assessing transmurality of a tissue ablation* (U.S. Patent No. 7,497,858).

- *Devices and methods for creating continuous lesions* (U.S. Patent No. 7,736,360).
- *Delivery system for delivering a medical device to a location within a patient's body* (U.S. Patent No. 8,657,815).
- *Delivery system for delivering a medical device to a location within a patient's body* (U.S. Patent No. 10,932,848).

III. INFORMATION CONSIDERED

14. In forming my opinions, I read and considered the '774 patent and its prosecution history, the exhibits listed in the Exhibit Lists filed with the Petition for *inter partes* review of the '774 patent, as well as the other materials referenced herein.

IV. LEGAL STANDARDS

15. I have been informed that the following legal principles apply to analysis of patentability based on 35 U.S.C. §§ 102 and 103. I also have been informed that, in an *inter partes* review proceeding, a patent claim may be deemed unpatentable if it is shown by a preponderance of the evidence that the claim was anticipated by a prior art patent or publication and/or rendered obvious by one or more prior art patents or publications.

A. Level of Ordinary Skill in the Art

16. It is my understanding that the claims and specification of a patent are to be read and construed through the eyes of a hypothetical person of ordinary skill in the art (i.e. "POSA") at the time the invention was made. To determine the appropriate level of one of ordinary skill in the art, I have been informed that the following factors may be considered: (a) the types of problems encountered by those working in the field and prior art solutions thereto; (b) the sophistication of the technology in question, and the rapidity with which innovations occur in the field; and (c) the educational level of active workers in the field.

B. Claim Construction

17. I have also been informed that, in order to assess whether the prior art satisfies a certain claim element in an invalidity analysis, the claim element must first be construed, and then the prior art must be evaluated to determine whether it satisfies the properly-construed element of the claim. I have been informed that a patent claim is to be construed from the perspective of a POSA at the time the invention was made, taking into account the claim language, the teachings of the patent specification, and the prosecution history.

18. I have been informed that the claims in the '774 Patent should generally be understood in accordance with their plain and ordinary meaning, in the context of the '774 patent, to a POSA at the time the invention was made. Unless otherwise

specifically noted, my opinions in this Declaration are consistent with that plain and ordinary meaning.

C. Anticipation

19. I have been informed that a patent claim is invalid as being anticipated if each limitation of the claim is disclosed explicitly or inherently in a single prior art reference. I further understand that a limitation is disclosed inherently if it is necessarily present in the prior art reference or is the natural result flowing from the disclosure of the prior art reference.

D. Obviousness

20. I have been informed that a patent claim is invalid as being obvious if the differences between the claimed subject matter and the prior art are such that the claimed subject matter as a whole would have been obvious to a person of ordinary skill in the art at the time the invention was made. I also understand that, in order to assess whether a claim would have been obvious in light of the prior art, I must step back in time and take the viewpoint of a POSA at the time the invention was unknown and just before it was made. I must then make a determination whether the claimed invention "as a whole" would have been obvious at that time to that POSA. My opinions in this declaration take the viewpoint of a POSA in the timeframe

immediately prior to the priority date of the challenged claims of the ’774 patent, i.e. March 3, 2011.[2]

21. I have been informed that the following facts are considered in determining whether a claimed invention is invalid as obvious over the prior art: (1) the scope and content of the prior art; (2) the level of ordinary skill in the art; (3) the differences between the claimed invention and the prior art and (4) any “secondary considerations” that may serve as evidence of nonobviousness, such as commercial success, long felt but unsolved needs, and failure of others.

22. I have been informed that a POSA is presumed to know all relevant prior art, which are those that are in the same field of endeavor or are reasonably pertinent to the problem faced by the inventor. I have been informed that a reference may be modified or combined with other references or with a POSA’s own knowledge if a POSA would have found the modification or combination obvious. In considering whether a claim is obvious, I can take account of inferences and creative steps that a POSA would have employed, and the common knowledge of the art that a POSA would have possessed.

23. I have been told that there is no rigid rule that a reference or combination of references must contain a “teaching, suggestion, or motivation” to combine references. However, I have also been informed that the “teaching,

[2] S*ee infra* Section VI.B.

suggestion, or motivation" test can be a useful guide in establishing a rationale for combining elements of the prior art. I have been informed that this test poses the question as to whether there is an express or implied teaching, suggestion or motivation to combine prior art elements in a way that realizes the claimed invention, and that it seeks to counter impermissible hindsight analysis.

24. I have also been informed that the combination of familiar elements disclosed in the prior art according to known methods is likely to be obvious when it does no more than yield predictable results. I understand that if a technique has been used to improve one product and a POSA would recognize that it would improve similar products in the same way, the use of that technique is obvious—unless its actual application is beyond the skill of a POSA. I have been informed that the proper obviousness analysis considers whether a POSA would have a "reasonable expectation of success"—and not an "absolute predictability" of success—in achieving the claimed invention by modifying and/or combining prior art references.

25. I have been informed that obviousness does not require that the prior art contain an express suggestion to combine known elements to achieve the claimed invention. A reason to combine known elements to achieve the claimed invention may come from the prior art as a whole or individually, as filtered through the

knowledge of a POSA. A reason for combining the elements in the manner claimed may also come from any need or problem known in the field.

26. I have also been informed that if a POSA can implement a predictable variation and would see the benefit of doing so, that variation is likely to be obvious. I have been told that in many fields, there may be little discussion of obvious combinations in the scientific literature and market demand may drive design trends. I have been told that, when there is a design need or market pressure and a finite number of predictable solutions, it would be obvious to a POSA to pursue those known options.

E. Priority and Written Description

27. I understand that a patent application may rely on the filing date of an earlier-filed application on a claim-by-claim basis if the claim in question has written description support in the earlier-filed application. I also understand that, in order to satisfy the written description requirement, the specification must reasonably convey to a POSA that the inventor had possession of the claimed subject matter.

V. FIELD OF TECHNOLOGY AND STATE OF THE ART

28. For this declaration, I have assumed that the priority date of the challenged claims is March 3, 2011, as this is the earliest possible priority date because earlier-filed applications in the priority chain do not describe both "extending" and "extendable" needles. *See infra* Section VI.B. Thus, for purposes

of this analysis, I assume that the time of the purported invention of the ’774 patent was March 3, 2011, and have provided an overview of the background of the relevant technology at that time.

A. Microneedling Devices in the Aesthetics Industry

29. Microneedling devices were well known in the aesthetics industry prior to March 3, 2011. For example, in 2008, Syneron began development of the ePrime system (also known by the names “Renesis” and “Miratone” and now marketed by Candela Medical (who acquired Syneron) as the Profound system). The Profound system is a bipolar RF microneedle system designed to create fractional thermal injuries in the dermis and thereby elicit the production of new collagen, elastin, and hyaluronic acid. The Profound system (then known as ePrime) was cleared by the U.S. Food and Drug Administration (FDA) for hemostasis and electrocoagulation in 2007 and for the percutaneous treatment of facial wrinkles in 2009. The Profound system was fully commercialized and sold in the US by 2010.

30. In addition, Jeisys commercially released, in 2009, a bipolar RF microneedle system (i.e. INTRAcel system) in Asia. The INTRAcel system utilized a rectangular array of multiple microneedles to create fractional thermal injuries in dermis, thereby providing for the percutaneous treatment of facial wrinkles.

31. Furthermore, microneedle systems had also been disclosed prior to March 3, 2011, in U.S. Patent No. 8,608,737 to Mehta et al. (“Mehta”) (i.e. EX1004),

International Patent Application Publication No. WO 2010/016848 by Na et al. ("Na '848") (i.e. EX1005), Korean Registered Utility Model No. KR20–0441552 to Lee et al. ("Lee") (i.e. EX1010, EX1011), and Korean Registered Patent No. KR10–1013581 to Ra Jong Joo (i.e. EX1021, EX1022).

B. Use of Disposable Needles in Microneedling Devices

32. Before March 3, 2011, it was well known to use disposable components in medical devices and, in particular, to use disposable cartridges in microneedling devices in the aesthetics industry. For example, the Profound system, which was commercialized and sold in the U.S. in 2010, utilized detachable, disposable needle cartridges designed for the Profound console and handpieces. The user manual for the Profound system included warnings that cautioned against reusing the disposable needle cartridges to limit the risk of infection and patient-to-patient transmission of blood-based diseases. In addition, detachable, disposable needle cartridges were also disclosed by Mehta (*see, e.g.,* EX1004 at FIGS. 4A–4F).

C. Fine Control of Microneedle Insertion Depth

33. Before March 3, 2011, it was known to provide for fine control of needle insertion depth in microneedling treatment.

34. Components suitable for producing fine translational control of microneedles, such as, step-motors, solenoids, pneumatic actuators, and other similar technologies, had been known for decades prior to March 3, 2011.

Furthermore, the use of a step-motor in a microneedling device to control microneedle insertion depth in a microneedling treatment device was disclosed by Lee (*see* EX1011 at <21>, <24>, <44>, <46>, <50>, <60>-<61>, <69>. The use of a step-motor in a microneedling device to provide translational movement of an electrode assembly containing RF microneedles was also disclosed by Mehta. *See* EX1004 at 15:36-40.

VI. THE ’774 PATENT

A. Overview of the ’774 Patent

35. I understand that the ’774 patent is one of five issued U.S. patents and two pending U.S. patent applications that claim priority to an international patent application published as International Patent Publication No. WO 2010/016848 to Na *et al*. (“Na ’848”), which I understand is Exhibit 1005 to the petition, and which claims priority to a Korean patent application filed on August 6, 2008, which I understand is Exhibit 1021 and whose English translation is found at Exhibit 1022 to the petition.

36. The ’774 patent “relate[s] generally to treating dermatological tissue, including systems, and methods used in treating dermatological tissue.” EX1001 at 1:30–32. Specifically, the ’774 patent describe a handheld dermatological treatment apparatus 10 with a handle 220 coupled to an acupuncture plate 200, which includes an acupuncture section or layer 250 with a plurality of acupuncture pins or needles

230. *Id.* at 2:60–64, 3:5–9. The plurality of pins or needles 230 of the dermatological treatment apparatus 10 are used to create "micro-wounds or holes in dermatological layers of a mammal's [] skin or dermis." *Id.* at 3:32–34. These micro-wounds or holes created by the dermatological treatment apparatus 10 enhance absorption or application of chemicals applied to the mammal's skin. *Id.* at 3:34–37. The treatment apparatus 10 can include as many as 140 pins or needles 230, each of which can have a diameter ranging from 0.1 to 0.4 mm and a length ranging from 0.2 to 1.4 mm. *Id.* at 3:18–22.

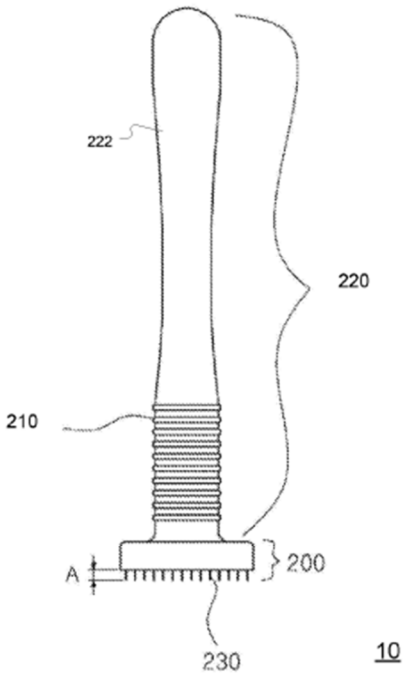

FIGURE 1B

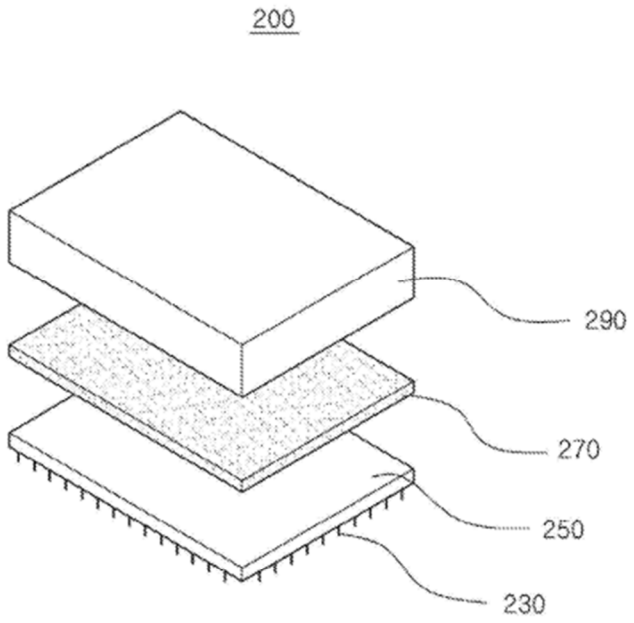

FIGURE 1C

37. The '774 patent describes at least two general ways in which the plurality of needles can be utilized in the dermatological treatment apparatus.

Specifically, the needles may be fixed and non-extendable, as illustrated in at least Fig. 2B, or extendable via a motor, as illustrated in Figs. 9C–9D. In the case of needles which are extendable, the ’774 patent describes that the motor drives the needles between a retracted position, as illustrated in Fig. 9C, and a deployed position, as illustrated in Fig. 9D. *Id.* at 2:28–33, 10:65–11:7, 11:23–27.

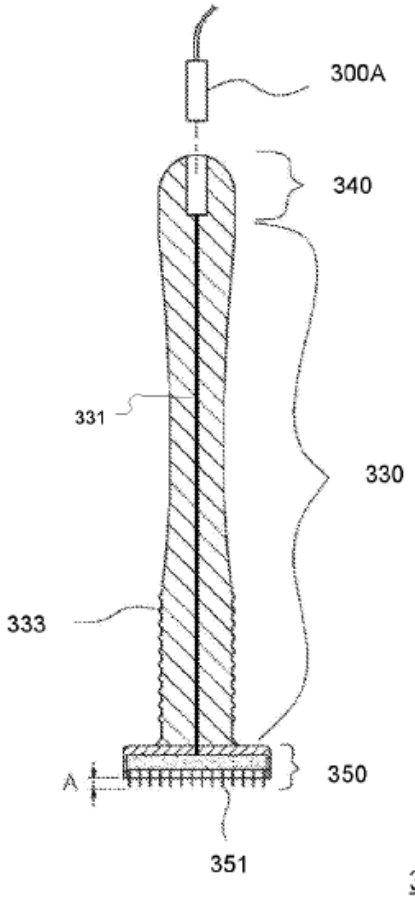

FIGURE 2B

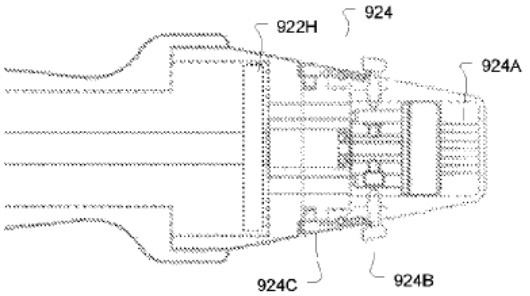

FIGURE 9C

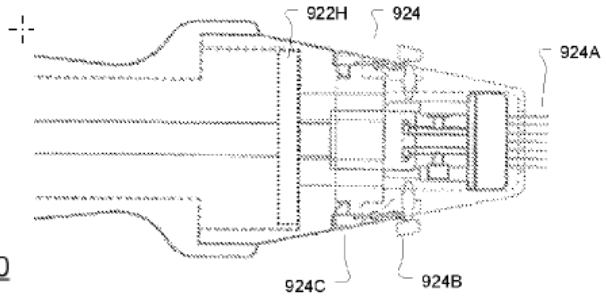

FIGURE 9D

38. The ’774 patent also describes an electrical signal generation system 300 used to produce electrical signals “to vibrate one or more pins 351 electrically coupled to the system” via wires arranged internally within the treatment apparatus.

Id. at 3:55–58, 4:1–15. The vibration of the pins increases the degree of a micro-wound or cut formed by the pins. *Id.* at 3:58–60, 4:13–15.

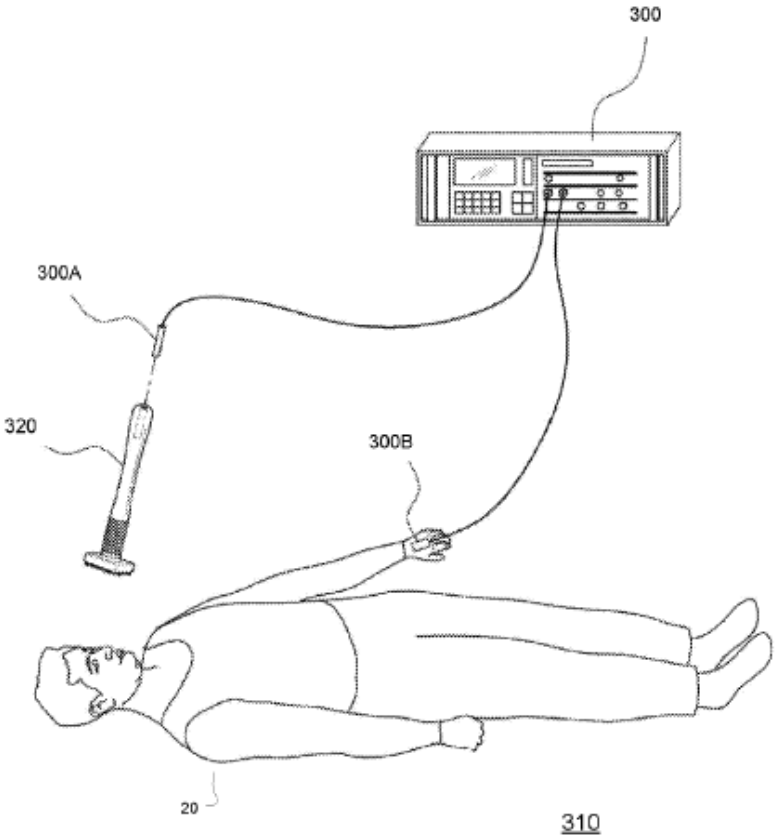

FIGURE 2A

39. The electrical signal produced by the electrical signal generation system may be in the form of square-wave pulses as illustrated in Figs. 5A–5B. *Id.* at 3:55–58, 6:13–58. Each pulse of the square-wave pulses "may have a similar magnitude and envelope" to energize the pins with a predetermined period P1, interval T1, and amplitude A1. *Id.* at 6:19–22. The '774 patent describes that properties of the pulses may be varied "as a function of the energy required to create capacitance in a liquid," and may range in amplitude A1 between 0.1 mA to 10 mA with a pulse width T1 of 100 μs to 500 μs and a period P1 from 100 ms to 500 ms. *Id.* at 6:22–31.

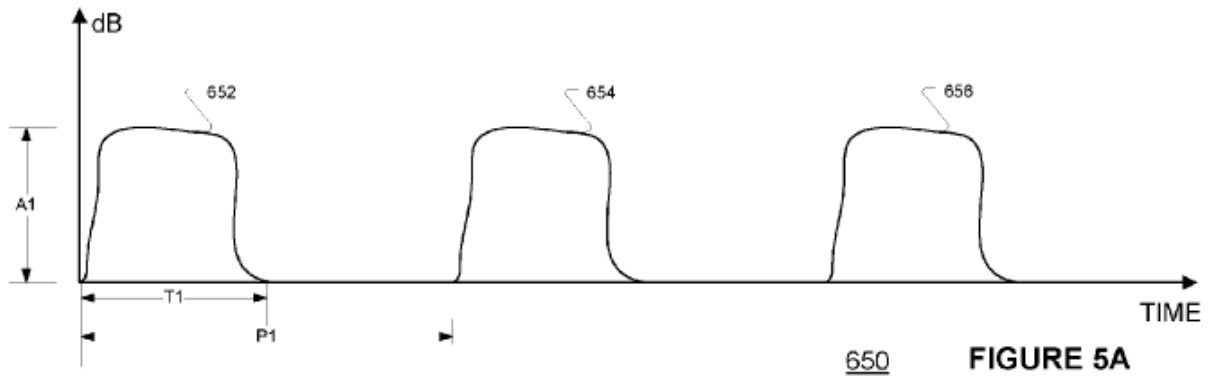

FIGURE 5A

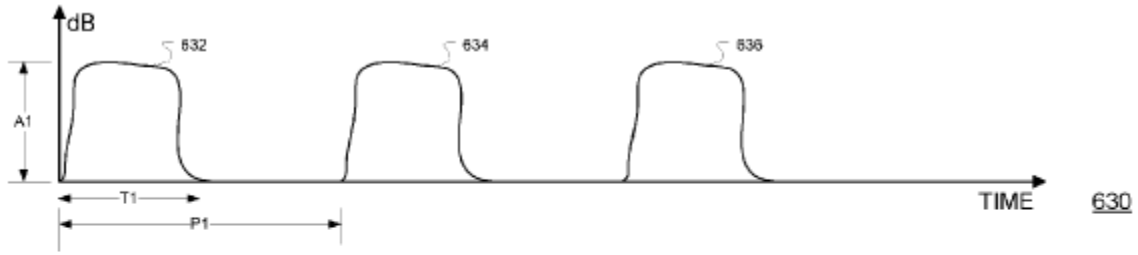

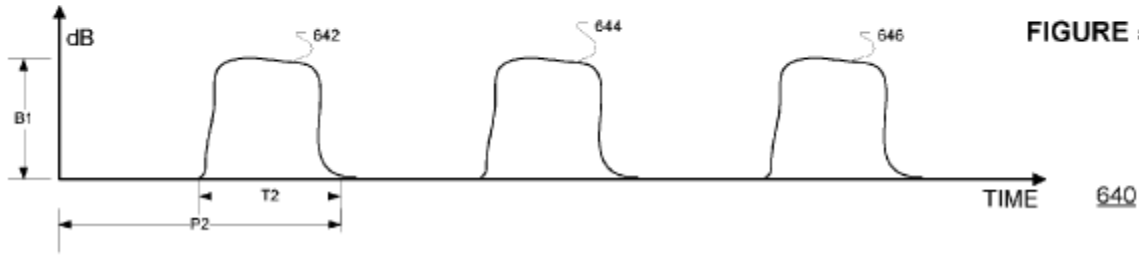

FIGURE 5B

B. Priority date of the claims of the ’774 Patent

40. I understand that the applicable date of the ’774 patent for prior art purposes depends on whether the features recited in the claims of the ’774 Patent are described in the application or applications to which priority is claimed. I also understand the claims of the ’774 patent have priority on a claim-by-claim basis to the earliest-filed application of the priority chain in which the claimed features are described.

41. As depicted below, the ’774 patent claims priority to a parent application which in turn claims priority to two separate chains: (1) the “2011 provisional chain” and (2) the “2008 Korean chain,” which includes Na ’848 (EX1005).

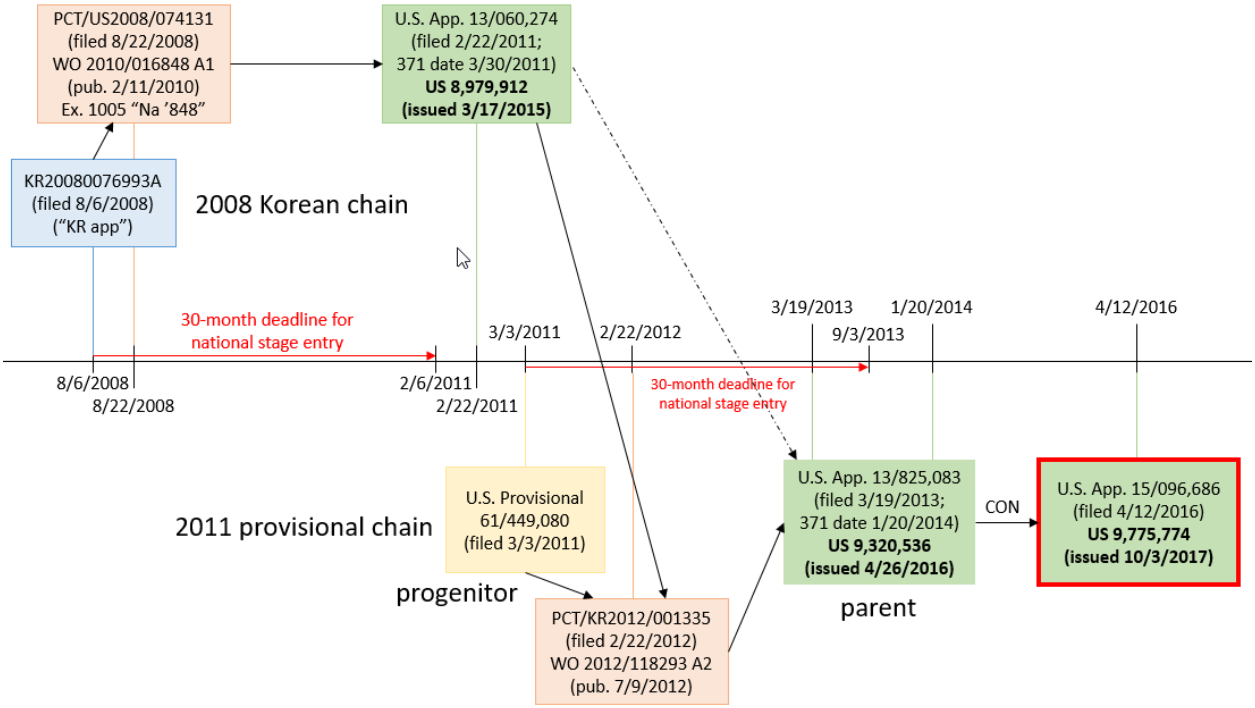

42. Independent claims 1 and 11 of the ’774 patent both recite “a plurality of needles one of extending or extendable.” It is my opinion that needles which are “extending” include needles secured in place relative to the device surface so that the needle length A is fixed as illustrated in the ’774 patent in the embodiments shown in Figs. 1A–1D, 2B–2F, and Figs. 3A and 3B. *See, e.g.*, *id*. at 3:3-31, 3:45-54. It is my opinion that needles which are “extendable” are illustrated, e.g., in the ’774 patent in the embodiment shown in Figs. 9C–9D, and are not fixed relative to the device surface so that the needle length can change. In the Detailed Description

regarding Figs. 9C–9D, the ’774 Patent describes that a motor is used to drive needles of the treatment apparatus between a retracted position, as illustrated in Fig. 9C, and a deployed position, as illustrated in Fig. 9D, in which the needle length from the device surface is greater than in the retracted position. *Id.* at 10:65–11:7, 11:23–27.

43. I have reviewed Na ’848, the international patent application to which the ’774 patent claims priority. Na ’848 includes figures and written descriptions regarding needles which are fixed and non-extendable, which are substantially similar to the figures and written description regarding fixed and non-extendable needles in the ’774 patent. For example, Fig. 2B of Na ’848 is identical to Fig. 2B of the ’774 Patent. However, Na ’848 does not describe a treatment apparatus with needles which are “extendable.” Na ’848 does not include any depiction of a treatment apparatus resembling the apparatus illustrated in Figs. 9C–9D of the ’774 Patent. Nor does Na ’848 provide any illustration or description of needles which are not fixed in place or otherwise moveable between a retracted position and a deployed position in which the need length is greater than in the retracted position, or of a motor that could be used for moving needles. Based on the absence of disclosure in Na ’848 of “extendable” needles, it is my opinion that Na ’848 does not provide adequate disclosure to support needles which are “extendable,” as claimed in independent claims 1 and 11 of the ’774 patent. “Extendable” needles,

such as are shown in Figures 9–11 of the ’774 patent, are not described in the 2008 Korean chain. *Compare* EX1001 *with* EX1023, EX1005, EX1021–EX1022. It is therefore my understanding that the claims of the ’774 patent do not have priority to the filing date of Na ’848.

44. Dependent claims 2–4 and 12–14 include additional features related to “extendable needles,” such as, e.g., “causing the plurality of extendable needles to extend a desired distance from the end surface.” EX1001, cl. 3. In my opinion, these additional features related to “extendable needles” are also not described in the 2008 Korean chain at least because no “extendable” needles are described in the 2008 Korean chain.[3]

C. The Prosecution History

45. I understand that the application leading to the ’774 patent (i.e. U.S. Patent Application Serial No. 15/096,686) was filed on April 12, 2016, with twenty original claims which recited only “extendable needles.” EX1002 at 59–61. I understand that the Applicant submitted a Preliminary Amendment in which all

[3] I have been informed irregularities in both the 2008 Korean chain and the 2011 provisional chain may result in the priority date of certain claims of the ’774 patent being as late as March 19, 2013, i.e. the filing date of the application that issued as U.S. Patent No. 9,320,536. However, for the purposes of this declaration, I have assumed that the priority date of the claims of the ’774 patent is March 3, 2011, i.e., the filing date of the earliest-filed application in the 2011 provisional chain.

original claims were canceled and the twenty new claims, which are those that are found in the issued ’774 patent, were added. EX1002 at 71–75.

46. I understand that the new claims were not rejected as being anticipated or obvious in view of any prior art, but rather only for obviousness-type double-patenting in view of the issued claims of U.S. Patent No. 9,320,536 (“the ’536 patent”), which issued from the application of which the ’686 application is a continuation. *Id.* at 188–192. I understand that, after a terminal disclaimer was filed (*id*. at 200–207, 232–243), a Notice of Allowance issued on August 21, 2017, which did not include a statement of reasons for allowance. *Id.* at 248–253.

D. The Challenged Claims of the ’774 Patent

47. The ’774 patent includes twenty claims. In this Declaration, I have considered the validity of claims 1–20. In my opinion, claims 1–20 of the ’774 patent are unpatentable as being anticipated by and/or obvious over the prior art references discussed below.

VII. LEVEL OF ORDINARY SKILL IN THE ART

48. In my opinion and based upon my background and experience, the level of skill of a POSA in the timeframe prior to March 3, 2011, would have been met by a person who had (1) 7-10 years of experience with developing and/or using treatment systems for delivery of electromagnetic radiation to skin or other tissues, and (2) a related graduate engineering degree or M.D. The POSA may have worked

as part of a multidisciplinary team and drawn upon not only his or her own skills, but also would have taken advantage of certain specialized skills of others on the team when solving a technical problem. In my opinion, additional education could substitute for professional experience and vice versa. In my opinion, claims 1–20 of the ’774 patent are unpatentable as being anticipated by and/or obvious over the prior art references discussed below from the perspective of a person with any other level of ordinary skill that is reasonable.

VIII. CONSTRUCTION OF CLAIM TERMS

49. For purposes of the Declaration, it is my understanding that I am to interpret the claim language according to its ordinary and customary meaning that it would have to a POSA as of the priority date of the claims of the ’774 patent in the context of the entire patent disclosure. It is my understanding that, in interpreting the claim language, I am to take into consideration the teachings of the patent specification and any relevant prosecution history.

50. I discuss the meaning of some claim terms below. For all other terms, I apply their plain and ordinary meaning. In my opinion, the challenged claims of the ’774 patent are unpatentable in view of the prior art references discussed below under any reasonable interpretation of the claim terms, including their plain and ordinary meaning.

A. Agreed Constructions From The ITC Investigation

51. I understand that Patent Owner and Petitioners agreed the phrase "needles one of extending or extendable" means "needles that are either extended or can be extended [from the device surface] (needles 'extending' a desired distance from the surface covers non-extendable needles having a fixed length; 'extendable' needles covers needles which are not fixed)." EX1007 at 15-16. Under these constructions, the claimed needles "extending" a desired distance from a surface cover needles that are fixed and non-extendable relative to the surface as depicted, for example, in Figs. 2A–2D of the '774 patent, and the claimed needles "extendable" a desired distance from a surface cover needles that are extendable relative to the surface as depicted, for example, in FIGS. 9C-9D and 10D-10E of the '774 patent. I understand that Patent Owner and Petitioners also agreed that the preambles of the claims of the '774 patent are limiting and that "a plurality of needles" means "two or more" needles. *Id*. at 15–16. I have applied these constructions in my analysis contained in this Declaration.

B. "a desired distance"

52. In my opinion, the term "a desired distance" should be given its plain and ordinary meaning, which simply distinguishes between needles extending or extendable a ***desired distance*** as opposed to an ***undesired distance***. For example, a POSA would understand in the context of the '774 patent that "a desired distance"

corresponds to a distance that is suitable for treatment of dermatological tissue (as opposed to an undesirable distance where the needles are too long or too short for the intended treatments).

53. To the extent Serendia contends that the plain and ordinary meaning of the term "a desired distance" should be interpreted to require a user-settable distance of needle extension along the axis of needle extension and/or should be interpreted to exclude: (1) needles which are extendable by a "fixed," predetermined distance; and (2) needles which are extendable to a distance chosen by selecting a particular angle of insertion, Serendia's proposed interpretation should be rejected because it is contrary to the plain meaning of that term.

54. Furthermore, Serendia's proposed interpretation of "a desired distance" is inconsistent with the context provided by the specification of the '774 patent. The '774 patent describes, in the context of non-extendable needles, that needles or pins 351 of a dermatological treatment apparatus may be placed in contact with skin to cause micro-wounds or cuts in the skin. EX1001 at 4:5–8, 4:13–15, FIGS. 2A-2D. Indeed, the challenged claims also use "a desired distance" in connection with "extending" needles, and the agreed construction of the phrase "needles one of extending or extendable" mentioned above defines "needles extending … a desired distance from a surface" as covering needles that are fixed and non-extendable relative to the surface. EX1007 at 15-16. Accordingly, with respect to non-

extendable needles, the ’774 patent describes that a distance of needle extension may include a fixed or predetermined distance dictated by the length of needles. It is my opinion that a POSA would understand the plain meaning of “a desired distance” encompasses such a fixed, predetermined distance, e.g., a distance dictated by the length of the needles.

55. The ’774 patent describes that in the context of extendable (e.g., retractable and deployable) needles, the needles of a dermatological treatment device may be deployed “to a desired extension beyond [a detachable cartridge module] 924…to enable a desired depth of needle 924A penetration within tissue.” EX1001 at 14:14–20. This “desired extension” may be selected by a user and implemented by a central processing unit (CPU) 911 via control of a motor for deploying the needles. *Id.* at 14:3–34, Fig. 12. The “desired extension” of the needles is selected once along with other parameters selected by a user or the CPU, such as electrical signal intensity, signal start delay, number of shots per activation, and signal duty cycle. *Id.* at 13:63–66, 14:21–24, Fig. 12. The treatment apparatus is then repeatedly “activated” (e.g., caused to carry out its intended function by energizing and actuating its various components) based on the selected parameters. *Id.* at Fig. 12. Therefore, a POSA would understand the plain meaning of “a desired distance” to also encompass any user-selected and/or repeatedly implemented needle deployment distance.

C. Other Claim Terms

56. I understand that, in the ITC investigation, other claim terms were construed and interpretations of other claims terms were advanced, including, e.g., "pulsed radio frequency signals" and "mechanism." For the purposes of this Declaration, I have applied the plain and ordinary meaning of those claim terms and of the remainder of the language of the challenged claims.

IX. OVERVIEW OF THE PRIOR ART

A. Mehta (EX1004)

57. Mehta is a U.S. patent that issued from an application filed on April 20, 2009, which was a continuation of a patent application filed on February 6, 2009. EX1004, at 1. I understand that Mehta qualifies as prior art to the '774 Patent because its April 20, 2009 filing date is before the invention and the effective filing date of March 3, 2011, of the '774 patent.

58. Mehta describes a microneedling device having an extendable array of probes. *See id.* at Abstract, 15:42–49. The probes are used to treat tissue in the human body by precisely delivering energy to regions beneath the surface of tissue without affecting the outer layer of skin. *See id.* at Abstract, 1:14–19, 2:37–57. The energy delivered by the probes can break down subcutaneous fat cells or other specifically targeted layers of tissue, allowing the device to aid in body contouring, reducing

cellulite, and treating other skin surface imperfections and blemishes. *See id.* at 2:45–57.

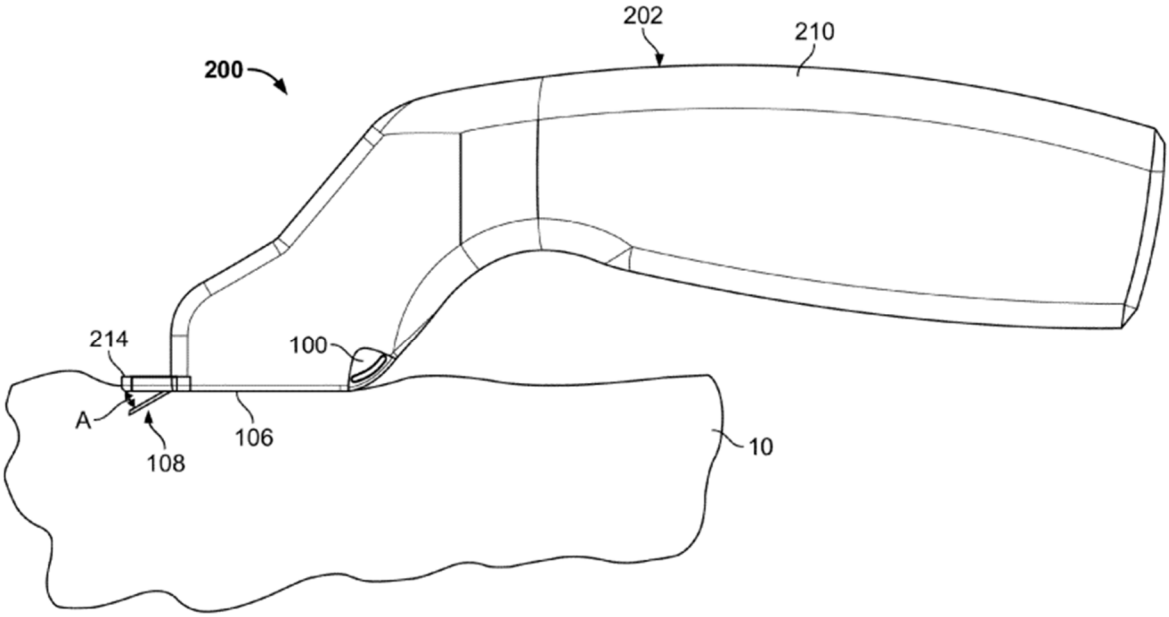

FIG. 2B

59. Mehta uses the terms "needles," "electrodes," and "probes" interchangeably. *See id.* at 9:41–55 ("The term probes 104…is intended to include any electrode, energy transfer element…or source of therapeutic treatment."), 12:47–58 at 54–58 ("The stabilization surface…can also be used to hold and therefore tension the skin at the insertion points to facilitate the needle insertion in the skin"), 14:13–19 ("the cartridge assembly places the probes 104 in an array 108…to provide the probes 104 on a probe assembly 102"), 15:42–49 ("electrode assembly 102 includes any number of electrodes that form an array 108"), 17:6–8 ("needle assembly 102"), 21:34-38, 31:37-41, 37:7-16. The needles or probes 104 of the device described in Mehta are extendable and retractable from a surface of the

device, and may be arranged on or in a replaceable cartridge in the device. *See id.* at 4:63–5:2, 6:53–54, 9:41–43, 9:51–55, 15:42–49, 16:19–22, Figs. 2A, 2B, 2D, 4A. A POSA would have understood that Mehta's needles, electrodes, and probes are all "needles" in the context of the challenged claims.

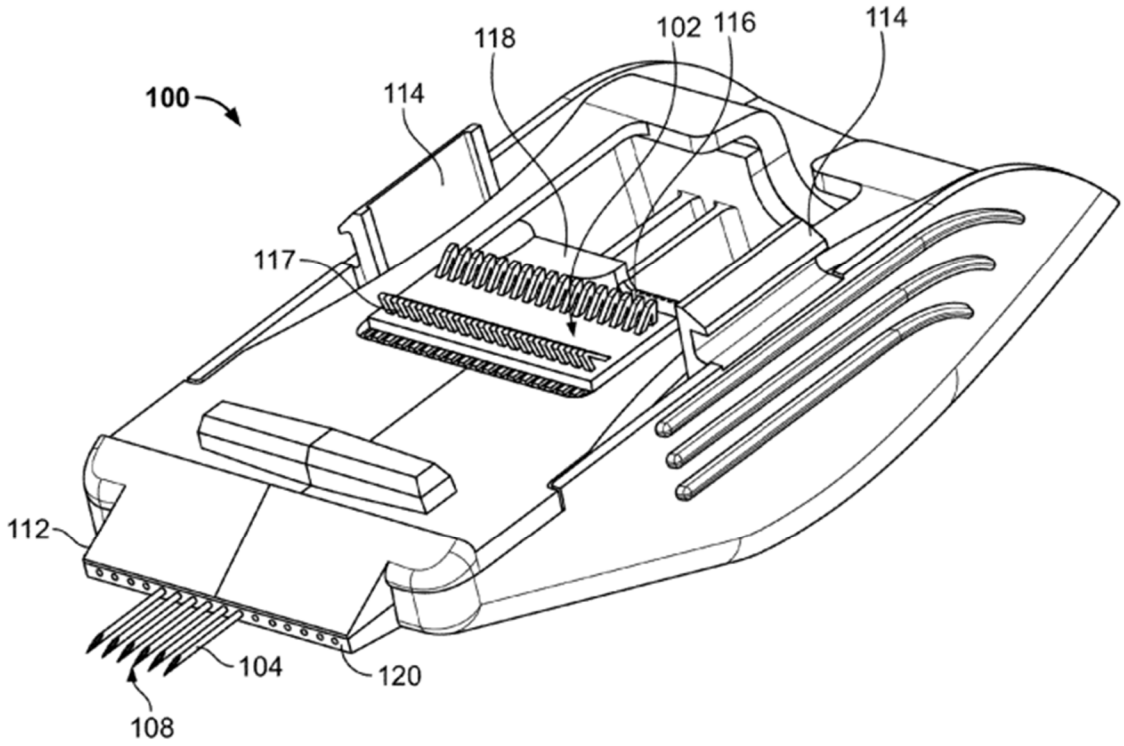

FIG. 4A

60. The microneedling device of Mehta includes an energy supply unit 90, which may not only power actuators of the device, but also provide energy that is delivered to a patient's tissue via needles 104. *See id.* at 10:38–39, 10:33–55, 11:14–15. The energy supply unit 90 can be an RF energy unit that delivers RF energy through the needles 104 that is then applied to a patient's tissue. *See id.* at 2:63–3:17, 11:33–35, 20:16–19. The RF energy can be delivered continuously or in pulses with a pulsed duty cycle that allows for improved temperature measurements in periods

between pulsed energy deliveries. *See id.* at 20:16–47. The energy supply unit 90 can also be used to supply power necessary to provide or remove thermal energy, ultrasound energy, microwave energy, laser energy, pulsed light energy, infrared energy, and combinations thereof. *See id.* at 11:14–20.

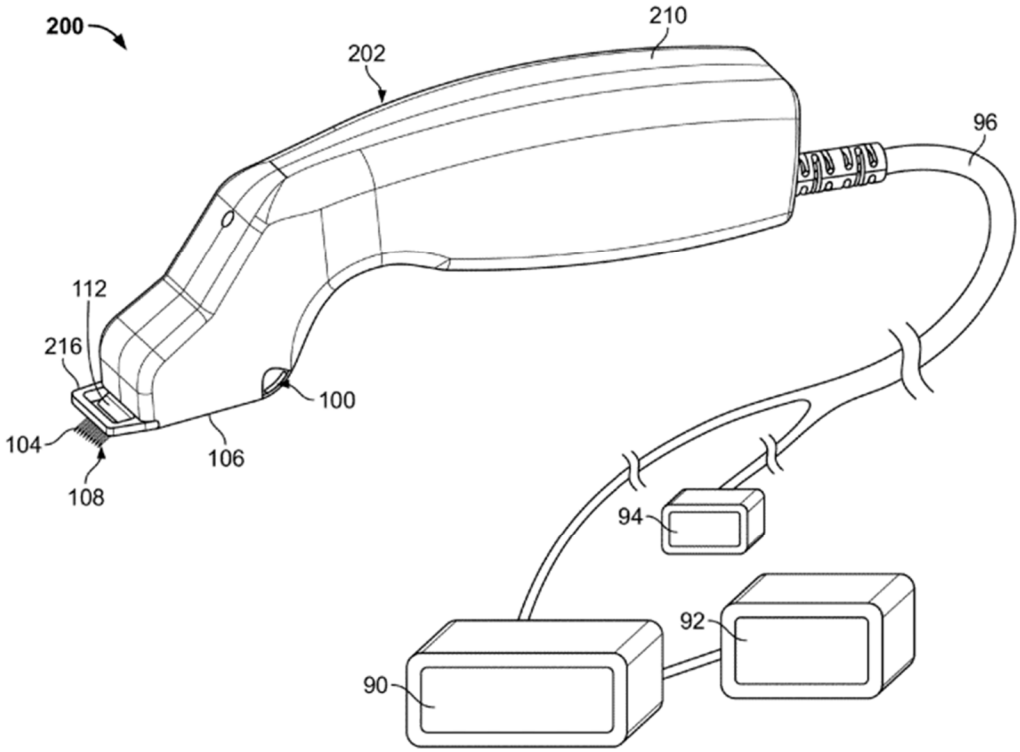

FIG. 2A

B. Na ’848 (EX1005)

61. Na ’848 is an international patent publication that published on February 11, 2010. EX1005, at 1. It is my understanding that Na ’848 thus qualifies as prior art to the ’774 Patent because its February 11, 2010 publication date is before the invention and the effective filing date of March 3, 2011, of the ’774 patent.

62. Much of Na ’848 is identical or substantially identical to portions of the ’774 patent. For example, Paragraphs [0002]-[0059] and Figs. 1-8 of Na ’848 are substantially identical to cols. 1:28-9:38, cols. 14:35-15:45, and Figs. 1-8 of the ’774 Patent. Both Na ’848 and the ’774 patent use the terms “pins” and “needles” interchangeably throughout their disclosures. EX1005 at [0023], [0024], [0029], [0031]; EX1001 at 3:8–11, 4:32–40. A POSA would have understood that Na ’848’s pins and needles are all “needles” in the context of the challenged claims. In particular, Na ’848 discloses needles 351 that are fixed in place, i.e., non-extendable or “extending” needles. The claims of Na ’848 also have substantial overlap with the claims of the ’774 patent, but notably do not include “extendable” needles.

63. Cols. 9:39–14:34 and Figs. 9A–12 of the ’774 patent contain matter which was not described or illustrated in Na ’848. It is my understanding that the subject matter described in cols. 9:39–14:34 and illustrated in Figs. 9A–12 of the ’774 Patent thus contain new matter relative to Na ’848. It is also my understanding that Na ’848 was not applied as prior art during examination of the application that issued as the ’774 patent.

C. Lee (EX1010, EX1011)

64. Lee is a Korean patent publication that published on August 25, 2008. EX1011 at 1 (citations to Lee are to its English translation found at EX1011). It is my understanding that Lee thus qualifies as prior art to the ’774 Patent because its

August 25, 2008 publication date is before the invention and the effective filing date of March 3, 2011, of the ’774 patent.

65. Lee discloses a skin treatment device that uses microneedles. *See* EX1011 at <13> (“The present invention relates to a skin regeneration apparatus capable of controlling the insertion depth of microneedles and, more particularly, to a skin regeneration apparatus capable of controlling microneedles that can provide effective multi-hole treatment as well as safety and precision as to the depth of microneedles by making it possible to automatically control the insertion depth of the microneedles during multi-hole treatment.”).

66. Lee discloses inserting the needles into skin to create perforations. *See* EX1011 at <15> (“In this method, for example, hundreds to tens of thousands of tiny holes are created on the human skin to regenerate tissues by using its self-healing ability to heal the skin that is damaged in the process of making the tiny holes”).

67. Lee discloses an actuator and mode switch to control the precise insertion depth of the microneedles. *See* EX1011 at <44> (“the present invention provides an actuator means that can control the insertion depth of the microneedles”), <33> (“Pressing the mode switch changes the mode. The selected mode controls the speed of reciprocating insertions (number of repetitive insertions) and the insertion depth of the needles.”).

X. THE CHALLENGED CLAIMS ARE UNPATENTABLE

A. Ground 1: Claims 1–7 and 9–18 are Anticipated by Mehta

68. In my opinion, Mehta anticipates claims 1–7 and 9–18 of the ’774 Patent.

1. Independent Claim 1

69. As discussed in more detail below, Mehta discloses each and every element of independent claim 1. Therefore, Mehta anticipates claim 1 of the ’774 patent.

(a) [1pre] A method of treating dermatological tissue

70. Mehta discloses a method of treating dermatological tissue. Mehta discloses microneedling methods for treating dermatological tissue to, for example, enhance the appearance of a patient’s skin. *See*, *e.g.*, EX1004 at 2:37-45. Microneedling methods, like those described by Mehta, both (i) trigger the skin’s natural healing response to stimulate collagen production and (ii) percutaneously deliver energy to cause contraction of existing collagen tissue in the skin’s dermis. The result of such microneedling treatment methods is tightened and rejuvenated skin with fewer visible fine lines and wrinkles.

71. Mehta teaches devices and methods to “treat tissue in the human body,” including “[treating] cosmetic conditions affecting the skin of various body parts.” EX1004 at 1:14–19, 5:3–15, 19:17–19, 24:46–47. Mehta discloses apparatuses and methods for “percutaneously delivering energy to tissue” to “produce cosmetically

beneficial effects" by "shrink[ing] collagen tissue in the dermis." EX1004 at 2:37-45. Mehta's devices and methods target specific layers of the skin for treatment. *See*, *e.g.*, *id*. at 8:45–48 ("[W]hen applying cosmetic treatment to the skin for tightening or removal of wrinkles, it is desirable to deliver energy to the dermis."); *see also id*. at 2:37–62, 3:42–4:43, 4:63-5:15, 5:49-57, 7:52–59, 8:45-48, 8:54-65. Treatment of the skin—and specific layers thereof—constitutes treatment of dermatological tissue.

72. Accordingly, Mehta discloses a method of treating dermatological tissue—as recited by element [1pre] of claim 1 of the '774 patent. Therefore, Mehta discloses [1pre].

(b) [1a] placing a device surface on or near dermatological tissue to be treated, the surface including a plurality of needles one of extending or extendable a desired distance from the surface

73. Mehta discloses placing a device surface on or near dermatological tissue to be treated, and discloses that the surface includes a plurality of needles one of extending or extendable a desired distance from the surface, as recited in Element [1a].

74. Mehta discloses placing a device surface on or near dermatological tissue to be treated. Mehta's methods for treating dermatological tissue involve placing a microneedling device—including a surface thereof—on or near a patient's skin and inserting microneedles into the patient's skin to apply treatment. In

particular, Mehta discloses "placing a tissue engaging surface of an energy delivery device against a surface of the tissue." EX1004 at 5:3-15; 1:14-19. Mehta's energy delivery device is a microneedling apparatus 200 that includes a treatment unit 202. The treatment unit 202 includes a handpiece 210 (*see*, *e.g.*, EX1004 at 4:1-18, 9:34-39, 9:59-62) and a removable cartridge 100 having needles 104 that are designed to penetrate a patient's skin and apply subcutaneous treatments thereto (*see*, *e.g.*, EX1004 at 4:63-5:2; 9:40-64). Mehta illustrates the microneedling apparatus—including the treatment unit 202, the handpiece 210, and the removable cartridge 100—in FIG. 2B (reproduced below).

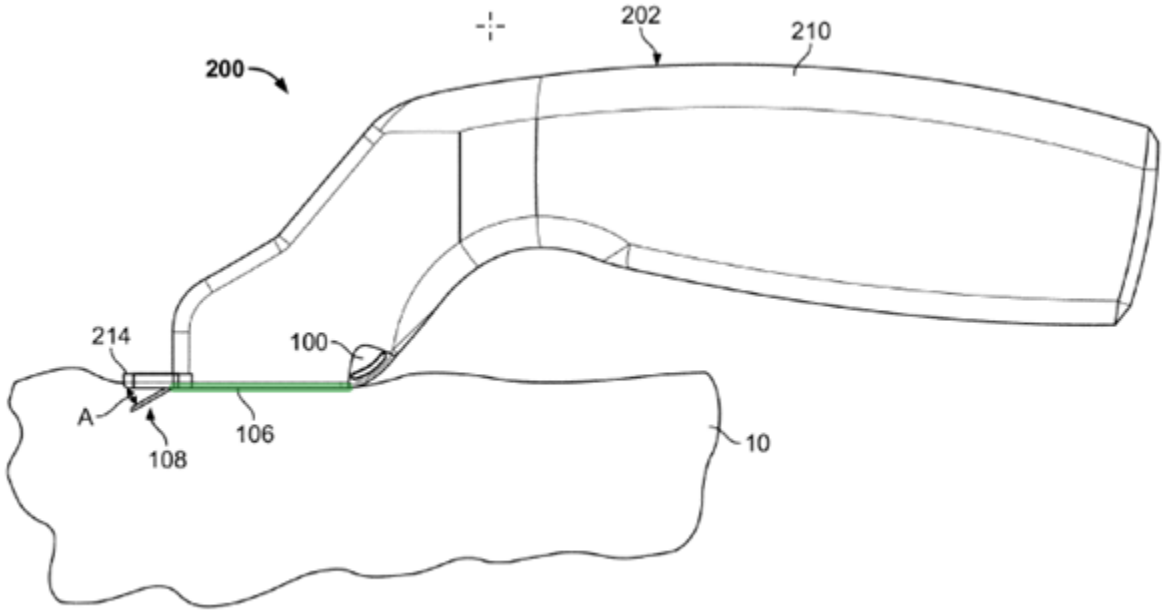

FIG. 2B

Mehta—FIG. 2B

75. The treatment unit 202 includes a tissue engaging surface 106 (highlighted in green in FIG. 2B above) that engages with a patient's skin. *Id.* at 12:23–30, Fig. 2B. The tissue engaging surface 106 can be part of a cartridge 100 and can include various features that ensure adequate engagement with the human skin, such as frictional surface characteristics, sensors that ensure proper contact, and vacuum apertures that provide negative pressure to maintain engagement. *Id.* at 12:31–61. Mehta discloses using the treatment system 200 depicted in FIG. 2B (below) by placing the tissue engaging surface 106 (highlighted in green) of the treatment unit 202, which includes a needle array 108, on the patient's skin 10. EX1004 at 12:23–61, 1:14–19, Figs. 2B, 1 (detailed illustration of skin 10).

76. Mehta discloses the device surface includes a plurality of needles that are one of extending or extendable a desired distance from the device surface. For example, Mehta discloses a plurality of needles (needle array 108) that are extendable a desired distance from the tissue engaging surface 106. *See, e.g.*, EX1004, FIG. 2B.

77. A POSA would have understood that the Mehta probes, electrodes, and needles are all referring to the claimed "needles." As discussed above in Section IX.A., Mehta interchangeably refers to elements 104 as "probes," "electrodes," and "needles" (*see*, *e.g.*, EX1004 at 12:47-58, 21:34-38, 31:37-41, 37:7-16). For example, Mehta refers to the same assembly 102 as a probe assembly 102 (*see*, *e.g.*,

EX1004 at 14:15-19), an electrode assembly 102 (*see*, *e.g.*, EX1004 at 15:34-36 and 15:42-49), and a needle assembly 102 (*see*, *e.g.*, EX1004 at 17:6-8). Mehta also repeatedly indicates that the term "needles" is intended to be interchangeable with "electrodes" and "probes." *See*, *e.g.*, EX1004 at 17:6-12 ("upon distal advancement of the needle assembly 102 … the temperature of the electrodes can be continuously monitored"), EX1004 at 40:45-51 ("[w]hen used with a bi-polar RF energy modality, the use of minimally invasive micro-needle electrode pairs appears to have several clear advantages"), EX1004 at 31:37-41 ("[w]hen more than 2 needles/probes have been placed in the tissue, sensing can be done between any two needles/probes to determine the tissue properties therebetween"). Moreover, Mehta states that "term probe shall be used to refer to any electrode, energy transfer element or source of therapeutic treatment unless specifically noted otherwise," and "is intended to include any electrode, energy transfer element (e.g., thermal, electrical, electromagnetic, microwave, mechanical, ultrasound, light, radiation, monopolar RF, bipolar RF, chemical, radioactive, etc.), or source of therapeutic treatment." EX1004 at 9:43-51. Furthermore, the dermatological treatment device described by Mehta is a type of device commonly known in the skincare field as a "microneedling" device, and a POSA would have understood that the elements designated by reference numeral 104 throughout Mehta are needles—regardless of whether they are referred to as "probes" or "electrodes."

78. The treatment unit 202 includes a needle array 108 including a number of individual needles 104. Fig. 2A of Mehta (reproduced below) illustrates another view of the treatment unit 202 with needles 104 forming needle array 108. *Id.* at 9:41–43.

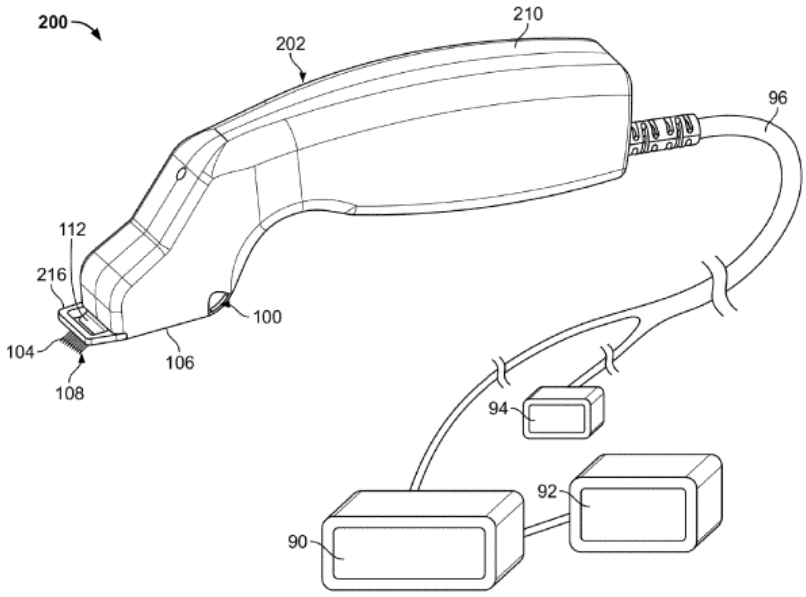

FIG. 2A

Mehta—FIG. 2A

The needles 104 of the needle array 108 are configured to extend into a patient's skin and provide for the percutaneous delivery of electromagnetic energy to dermatological tissue. *See*, *e.g.*, EX1004 at 2:37-45.

79. In the microneedling apparatus of Mehta, the microneedles are extendable from a fully retracted position and from a front portion of a removable cartridge. *See*, *e.g.*, *id*. at 14:14-18, 15:45-49, 16:19-22, FIGS. 4A (deployed/extended position), 4C (retracted position). In the microneedling

apparatus 200 of Mehta, the needles 104 are included as part of the tissue engaging surface 106 and are extendable by a desired distance from the tissue engaging surface 106—as is illustrated in FIG. 7A of Mehta, reproduced below.

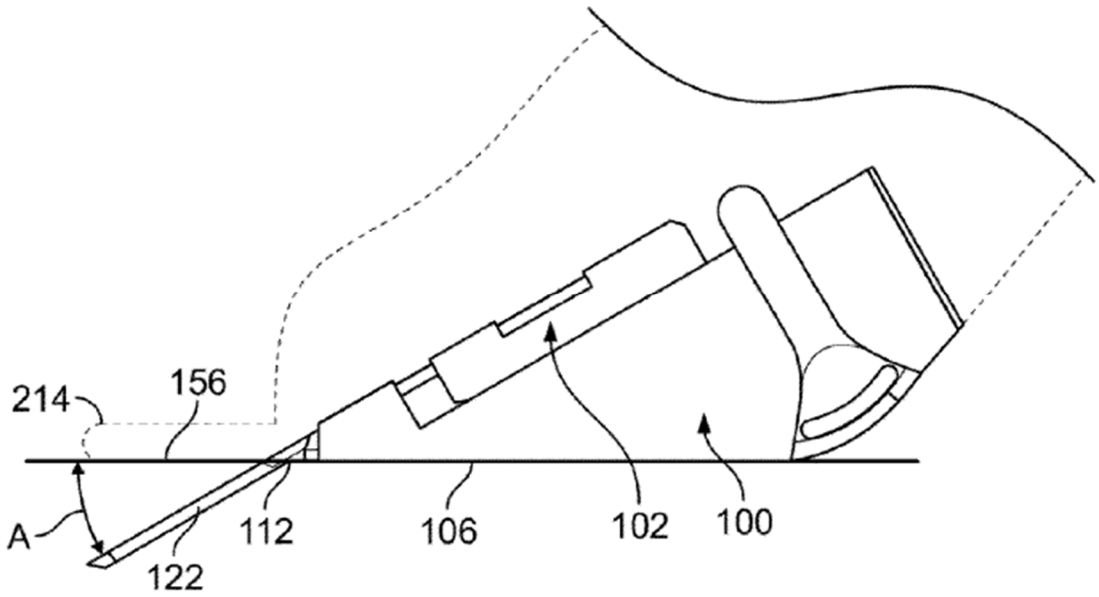

EX1004—FIG. 7A

80. Mehta discloses a needle assembly 102, having a plurality of needles 104, that is "slidable relative to the cartridge body 100 and the device body 210" to enable the needles 104 to "be driven into tissue." EX1004 at 14:14-18. As the needle assembly 102 slides relative to the cartridge body, the needles 104 move between an extended position and a retracted position.

81. FIG. 4C of Mehta (reproduced below) illustrates the cartridge 100 with the needle assembly 102—and therefore the extendable needles 104—in a retracted position. *See id*. at 16:59-60.

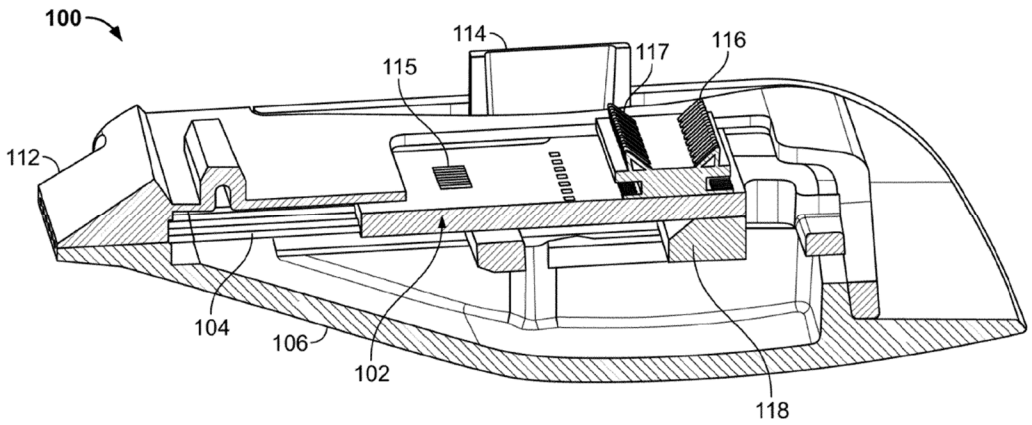

EX1004—FIG. 4C

82. When the needle assembly 102 is in the retracted position, the tips of the needles 104 define a retracted tip plane, i.e. a plane that extends along the tip of each of the retracted needles. EX1004, FIG. 4C. In FIG. 4C, that plane may correspond to the front portion 112 of the cartridge 100, or that plane may lie behind the front portion 112 of the cartridge. The claimed "device surface" is also satisfied by the plane defined by the tips of the needles of the deployable needle assembly 102 of Mehta when the needles 104 are not extended.

83. FIG. 4A of Mehta (reproduced below) illustrates the removable cartridge 100 with the needle assembly 102 in an extended position.

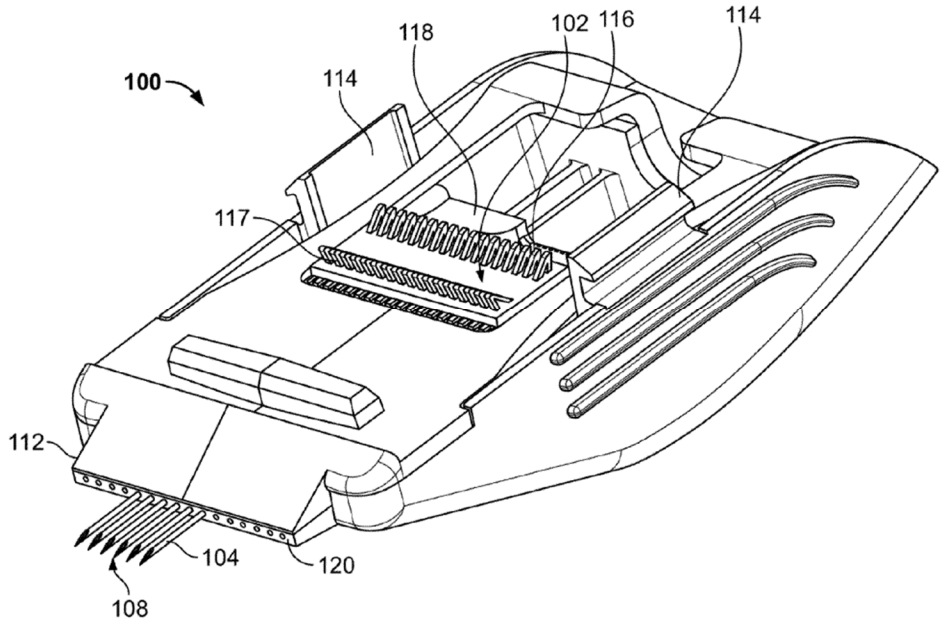

EX1004—FIG. 4A

In the extended position illustrated in FIG. 4A, the needles 104 extend from both (i) the position in which the needles are located when in the retracted position, and (ii) the front portion 112 of the cartridge 100 and the tissue engaging surface 106 (as shown in, e.g., Figs. 7A, 7B).

84. Mehta discloses a motor 250 that causes the plurality of extendable needles to extend a desired distance from the surface. Mehta discloses a motor coupled to a plurality of extendable needles to selectively advance and retract the needles. In the microneedling apparatus of Mehta, a motor is provided that couples to the needle assembly 102 in order slide the needle assembly towards a front portion 112 of the cartridge 100 and thereby cause the needles 104 of the needle assembly 102 to extend from the front portion of the cartridge 100. *See*, *e.g.*, *id*. at FIGS. 4A,

4C, 14:14-18, 15:34-40, 16:19-22, 16:59-64, 18:21-37. The motor is controlled by a control system. *See*, *e.g.*, *id*. at 10:38-39.

85. Mehta discloses "a moveable actuator 250" which can be provided in the form of "any number of actuation means, including, but not limited to, pneumatic cylinders, springs, linear actuators, *or other such motors*." *Id*. at 18:34-37 (emphasis added). Accordingly, Mehta discloses an actuator provided in the form of a motor. Mehta further discloses that "[t]he mode of movement of the actuator can include…sliding, rotation, incremental indexing (via a ratchet-type system), [and] stepping (via an [*sic*] step-motor)." *Id*. at 15:36-40. Mehta further teaches that the "motor…provides sufficient force, speed or impact to" the needles "to drive them into tissue," and that the motor "moves the shaft 256 where an engagement portion 252 on the shaft couples to" the needle assembly 102 "via a coupling portion 118…to advance and retract" the needles 104. *Id*. at 13:63-65, 18:25-31. The actuator 250 and the shaft 256 are illustrated in FIG. 5 of Mehta, which is reproduced below, while the coupling portion 118 is illustrated, e.g., in FIG. 4A of Mehta, which is also reproduced below.

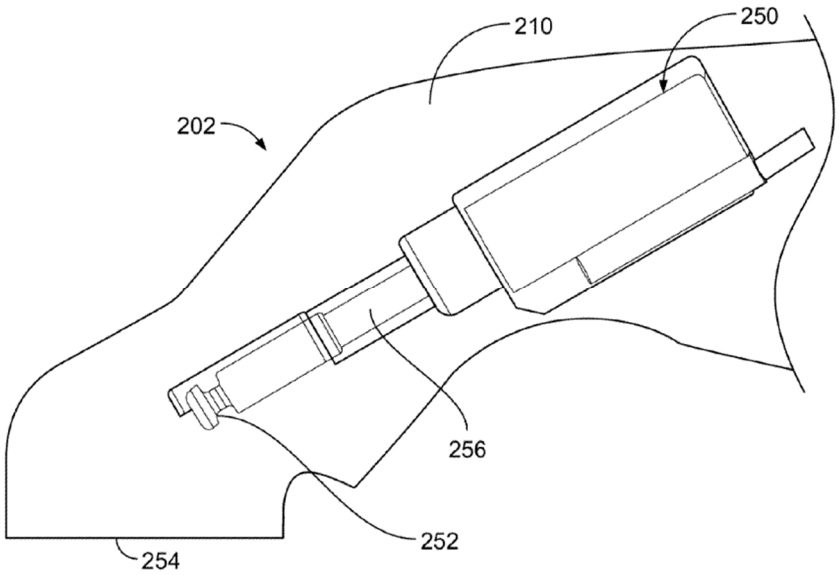

EX1004—FIG. 5

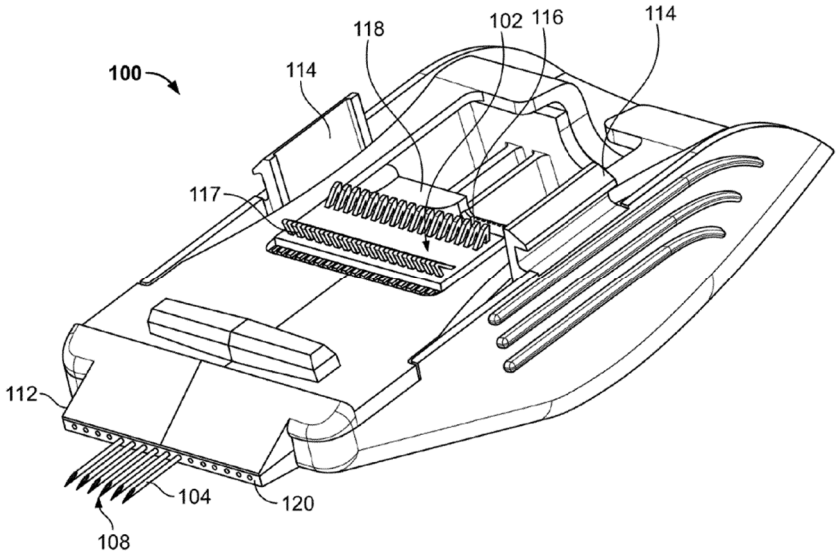

EX1004—FIG. 4A

86. Control of the actuator 250 confers the ability of the needles 104 to be extendable a desired distance from the surface. When the needles 104 are advanced by the motor 250, they extend by a desired distance to carry out a treatment. *See*

EX1004 at 18:25-37. Mehta teaches that "the device can include a tissue engaging surface 106…to ensure that the device contacts the surface of tissue so that the energy transfer elements or probes reach the desired depth." EX1004 at 32:16-20. Mehta discloses a user interface for showing "the desired depth of placement for providing a treatment" and avoiding placement of needles "in an undesired region." Ex.1004 at 32:63-33:3, 33:35-43.

87. Mehta discloses the needles 104 are extendable to a distance selected by a user, e.g. to correspond to a target tissue layer, and therefore are extendable "a desired distance." Mehta discloses indicating both an actual depth of placement of the needles and a desired depth of placement for the needles to "[allow] the physician to…identify whether the array is located within the desired tissue layer" and "be informed that further advancement of the probes is necessary." EX1004 at 33:14-16, 33:24-27; *see also id*. at 13:37-45, 32:52-57, 32:67-33:3, FIGS. 10B, 10E. Mehta discloses "[guiding] probe placement" by "[adjusting]" the system (EX1004 at 33:30-40), and provides a stepper motor to support such adjustments (*id*. at 15:34-42; *see also id*. at 10:33-39, 12:5-8). Thus, Mehta teaches the "desired distance" limitation regardless of which interpretation of "desired distance" discussed above in Section VIII.B is applied.

88. In order to provide the capability of adjusting the amount of needle extension/needle insertion depth, and to provide for fine adjustments of needle

position relative to previous treatment positions, Mehta discloses controllable extension of the extendable needles 104 to a desired distance based via a "step-motor." EX1004 at 10:33-39, 12:5-8, 15:34-42, 33:30-34. Stepper motors, such as the step-motor disclosed by Mehta, are electromechanical devices that convert electrical pulses into rotational motion. Unlike traditional electric motors, which spin continuously when voltage is applied, step motors move in discrete steps. Each step corresponds to a specific angular displacement, and the motor will move from one step to the next in response to electrical pulses. Step-motors are therefore suitable for applications where precise control of position and speed is crucial—as is the case in controlling the deployment of an array of RF microneedles. For a step-motor, like that disclosed by Mehta, the command signals are provided as electrical motor control signals in the form of a pulse train. A "rotation-to-translation" mechanical conversion unit, such as a gear assembly, is used between the motor and the array of needles to obtain the desired translational movement. The rotation-to-translation mechanical conversion unit can be constructed in such a manner to provide a desired rotation-to-translation ratio, i.e. to provide a desired translational motion in response to a particular rotation of the step-motor.

89. The distance by which the needles extend from the tissue engaging surface 106 can be selected by a user, e.g. by choosing to couple a particular removable cartridge 100 having needles of a particular length to the proximal end of

the handpiece/device body 210. For example, a user may select the distance by which the needles extend from the tissue engaging surface 106 by choosing a particular removable cartridge having needles of a particular length—e.g. a length that corresponds to deployment in the dermal region of a patient's tissue when fully extended from the tissue engaging surface 106. Mehta teaches that "the system can be provided with a number of electrode cartridges…for the physician to control treatment or placement of the electrodes[, i.e. needles,] by exchanging cartridges" (EX1004 at 17:66-18:3), that "the individual probes[, i.e. needles,] 104 can have any number of shapes or profiles depending on the particular application" (*id.* at 10:17-19), that "for skin resurfacing, the length…is generally selected so that the energy delivery occurs in the dermis layer of the skin 10," (*id.* at 10:19-25), and that "[s]electing probes[, i.e. needles,] having sufficient length to reach the subcutaneous fat layer allows for such probes[, i.e. needles,] to apply energy in the subcutaneous fat layer." (*id.* at 8:16-18). Mehta additionally teaches a user interface for showing "a desired depth of placement" (*id.* at 32:63–33:3) and teaches avoiding placement of needles "in an undesired region" (*id.* at 33:35–43).

90. Mehta discloses how the needles 104 are inserted into the skin 10. EX1004 at 15:27-17:21, 21:1-21, FIGS. 4A-4C and 7A. To ensure that the needles extend by the desired distance, Mehta discloses "[o]ver-inserting and then partially

retracting" the needles to the desired distance in order to provide "a more reliable insertion." EX1004 at 16:39-41.

91. Even under Serendia's narrow interpretation of "a desired distance," see Section VIII.B. above, Mehta discloses Element [1a] as Mehta teaches that angle A (FIG. 2B) dictates the vertical distance of the tips of needles 104 from the tissue engaging surface 106. EX1004 at 12:31-58, 20:56-21:13, FIGS. 2A-2B, 7A. Mehta teaches that system 200, as illustrated in Figs. 2A–2B, includes an angle A formed between the needle array 108 and the plane of a cartridge 100 to which the needles are attached. *Id.* at 12:31–34. Similarly, as illustrated in Figs. 7A–7B, the needles 104 form an angle A relative to the tissue engaging surface 106. *Id.* at 21:1–8, 21:22–24. In each instance, the angle A dictates a horizontal and vertical distance of portions of the needles 104 (such as the tip of the needles 104, or an active region 122 of the needles 104) from the tissue engaging surface 106. Mehta also teaches that the angle A, and thus the depth of the needles 104 from the tissue engaging surface 106, is "chosen" by a user based on a variety of factors to have a value of "between nearly 0 and 90 degrees." *Id.* at 12:23–46. Mehta further teaches that the needles are inserted by a user at "a desired location in tissue" and more generally that the intended effect of the systems and methods described is to improve delivery of energy "within specific layers of tissue." *Id.* at 12:23-46 at 12:41–43; *see also id.* at 2:60–63.

92. Mehta teaches, in connection with Fig. 4A, that needles 104 are "extendable." *Id.* at 15:45–49. In connection with Fig. 7A, Mehta further teaches that needles 104 are extended to a "desired depth" within tissue. *Id.* at 21:8–10. In connection with FIG. 7C (reproduced below), Mehta teaches extension of needles 104 to a "vertical distance or length 158." *Id*. at 23:11–20.

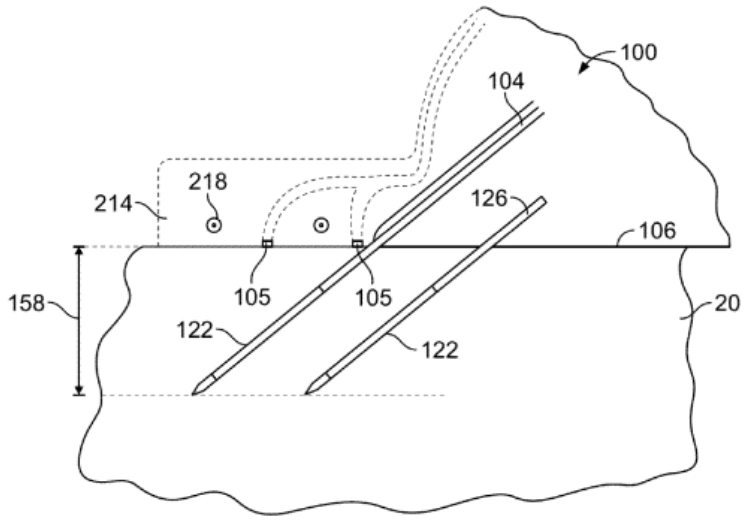

FIG. 7C

93. The vertical distance 158 between the tip of the needle 104 and the tissue engaging surface 106 is depicted in Fig. 7C and correlates to the chosen angle A. The vertical distance between the tip of the needle 104 and the tissue engaging surface 106 is also disclosed in Figs. 2B and 4A as a result of formation of the angle A. Thus, choosing a particular angle A (which, as discussed above, Mehta teaches can be chosen within a range of nearly 0 to about 90 degrees) provides for extension of extendable needles 104 to a distance desired by a user from the tissue engaging surface 106.

94. Mehta also discloses the needles can be marked with indicia that allows the physician to extend the needles 104 to a desired distance. For example, Mehta discloses the needles 104 can "include any number of visually distinguishing features (e.g., depth markings, colors, shades, etc.) that enable a physician to observe proper placement" to ensure, e.g., the needles are "not driven too far into tissue." EX1004 at 13:37-45. Mehta also discloses the needles 104 "can be marked with one or more features that allow the physician to determine the depth of insertion of the probe." *Id*. at 13:43–45.

95. To the extent that Serendia contends that Figs. 4A-4C and/or 7A of Mehta are directed to separate embodiments relative to Figs. 2A-2D, this reading of Mehta is incorrect. Although Mehta describes and illustrates slight variations or so-called "embodiments" throughout, they are nonetheless not always entirely distinct and separate alternatives to one another. For example, a POSA would have understood that Figs. 2A–2D of Mehta depict a system 200 generally, and that Figs. 4A–4F and 7A–7E depict a variety of exemplary implementations of components that are contemplated for incorporation into the system 200. *Id.* at 6:51–62, 7:1–12.

96. In a more specific example, Mehta introduces Figs. 4A and 4B as "show[ing] variations of cartridge bodies for use with variations of the present system," and a POSA would have understood "the present system" refers back to the "treatment system 200" depicted in FIGS. 2A-2D. EX1004 at 6:41-42, 6:51-52,

9:34-55, 14:5-19, 15:27-54. Mehta makes clear that the disclosure regarding the "connection fastener" (mechanical connection) is meant to refer to all the variations of cartridge bodies in Figs. 2A-D, 4A and 4B. *See* EX1004 at 16:42-46 (while "FIG. 4B shows another variation of a cartridge 100," "any number of connection fastener configurations can be used with various cartridge assemblies of the present invention"). A POSA would have understood Fig. 4A depicts an exemplary implementation of a cartridge 100 that may be incorporated into the system 200 of Figs. 2A–2B; FIG. 4C is a cross-sectional view of Fig. 4A, and Fig. 7A depicts a side view of how needles 104 of the cartridge 100 of Figs. 2A–2B would enter human tissue. Thus, Figs. 4A-4C and 7A depict implementation details of the relatively undetailed cartridge shown in a portion of Figure 2D; they are not different embodiments. Even if these were separate embodiments, a POSA would have understood that Mehta discloses embodiments which include these components as Mehta teaches that "[i]t is understood that the embodiments described above may be combined or the aspects may be combined." EX1004 at 41:35-39.

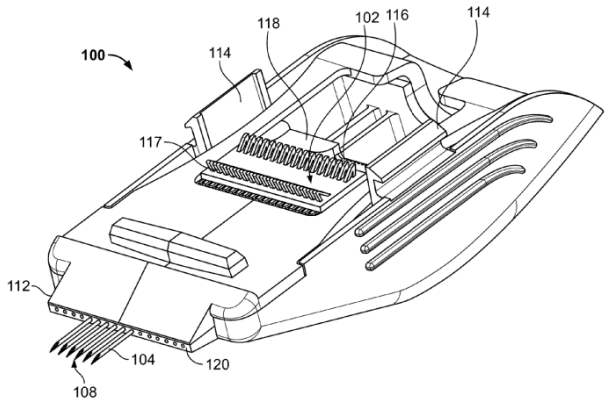

FIG. 4A

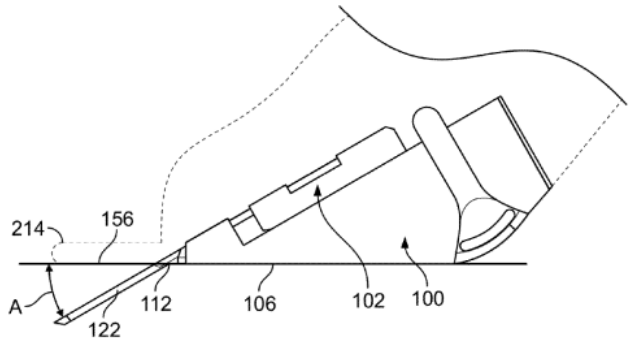

FIG. 7A

97. Mehta separately discloses that placement of the tissue engaging surface 106 on skin causes the needles to reach "the desired depth," EX1004 at 32:16-20, as well as a user interface for showing "a desired depth of placement," *id.* at 32:63-33:3, and for avoiding placement of needles "in an undesired region." *Id.* at 33:35-43.

98. Accordingly, Mehta's microneedling treatment method involves placing a device surface (i.e. the tissue engaging surface 106) on or near dermatological tissue to be treated, the surface including a plurality of needles (i.e. needles 104) one of extending or extendable a desired distance from the surface—as recited by element [1a] of claim 1 of the '774 patent. Therefore, Mehta discloses element [1a]. Thus, it is my opinion that Mehta fully discloses element [1a] even under Serendia's narrower interpretation of "desired distance."

(c) [1b] directing a signal generator electrically coupled to the plurality of extended needles to produce pulsed radio frequency signals across the plurality of needles

to affect dermatological tissue near the plurality of needles

99. Mehta discloses directing a signal generator electrically coupled to the plurality of extended needles to produce pulsed radio frequency signals across the plurality of needles to affect dermatological tissue near the plurality of needles as recited in Element [1b].

100. In Mehta's microneedling apparatus 200, a signal generator is electrically coupled to the needles 104 when they are extended from the tissue engaging surface 106 and provides energy to, i.e. energizes, the extended needles to percutaneously deliver energy to the patient's skin and thereby provide treatment. *See*, *e.g.*, EX1004 at 2:37-62, 10:53-65, 15:55-59, 17:3-12,

101. Mehta discloses the energy supply unit 90 is electrically coupled to the probes 104. EX1004 at 9:34-55, 10:17-32, 10:53-65, 15:55-16:11, FIGS. 2A, 4A. In particular, Mehta discloses that "[t]he system 200 also includes an energy supply unit 90 coupled to the treatment unit 202 via a cable 96 or other means." EX1004 at 10:53-55. FIG. 2A of Mehta, reproduced below, illustrates the microneedling apparatus 200—including the treatment unit 202, cable 96, and energy supply unit 90.

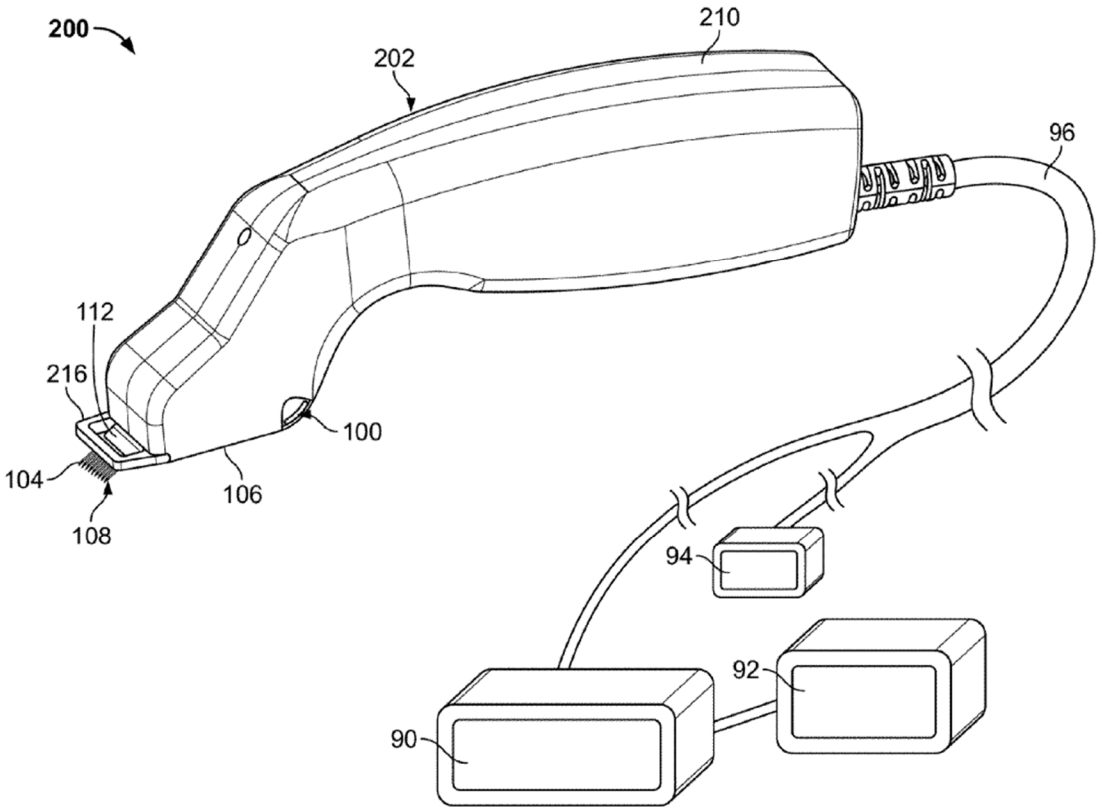

EX1004—FIG. 2A

Mehta teaches that "the energy supply unit 90 contains the software and hardware required to control energy delivery." EX1004 at 10:53-59. As an alternative to the externally-located energy supply unit 90 depicted in FIG. 2A, Mehta teaches that "the CPU, software and other hardware control systems," as well as "the power supply necessary to deliver treatment," may "reside in the handpiece 210." EX1004 at 10:53-65. Mehta further teaches that an electrical pathway is provided from the power supply to the needles. EX1004 at 15:55-59, 15:62-65.

102. Accordingly, Mehta discloses a signal generator (i.e. energy supply unit 90 or power supply residing in the handpiece) electrically coupled to the plurality of extended needles (i.e. needles 104)—as recited by claim 1 of the ’774 patent.

103. Mehta discloses the signal generator is directed to produce pulsed radio frequency signals across the plurality of needles to affect dermatological tissue near the plurality of needles. Mehta teaches that the energy provided by the signal generator (i.e. the energy supply unit 90 or power supply residing in the handpiece 210) is provided in the form of pulsed radio frequency signals across the plurality of needles. Specifically, Mehta teaches that “energy supply unit 90 may be a RF energy unit” such that it supplies RF energy. *Id.* at 11:14–15. Mehta also teaches that the RF energy produced and controlled by energy supply unit 90 for delivery via needles 104 may be “delivered in a pulsed fashion or for a specific duty cycle,” e.g. in the form of a “square wave” or “triangular” wave. *Id.* at 20:13–21, 20:29-35. Square waves, for example, are normally off and suddenly on for a period of time, representing a rapid, transient change from a baseline to a different amplitude, followed by a rapid return to baseline. Square waves are also normally off with an amplitude of zero and suddenly on with a constant amplitude for a brief portion of time. Mehta teaches that the RF energy “can be pulsed so that temperature measurements can be taken between the pulsed deliveries of energy.” EX1004 at 20:21-28.

104. When Mehta's system is used to provide treatment, the signal generator 90 is directed to produce RF energy. EX1004 at 10:53-11:13, 12:5-14. Mehta teaches that the pulsed RF signals treat, i.e. affect, dermatological tissue in the vicinity of the needles 104. Specifically, Mehta teaches "percutaneously delivering energy to tissue" in a precisely controlled manner via the needles 104 "to shrink collagen tissue in the dermis in an effective manner that prevents the energy from affecting the outer layer of skin." *Id.* at 2:37–45. Mehta also teaches that "[s]electing probes having sufficient length to reach the subcutaneous fat layer allows for such probes to apply energy in the subcutaneous fat layer…to break down the fat cells in that layer," for example, "in the reduction of cellulite" and "contouring of the body surface for improved appearance." *Id*. at 2:47-54. Mehta notes that, by providing the RF energy in a pulsed fashion, "temperature measurements can be taken between the pulsed deliveries of energy," which also allows for more precise control of energy delivery when trying to achieve a predetermined temperature target. *Id.* at 20:21–28. By heating the target tissue through the application of RF energy, the tissue is affected. Specifically, Mehta teaches that "[t]he application of heat to the fibrous collagen structure in the dermis 18 causes the collagen to dissociate and contract along its length," which "causes the dermis 18 to reduce in size." *Id*. at 8:54-59. As a result, "wrinkles, lines, and other distortions become less visible." *Id*. at 8:60-61.

105. Accordingly, Mehta's microneedling treatment method involves directing a signal generator (i.e. energy supply unit 90 or power supply residing in the handpiece) electrically coupled to the plurality of extended needles (i.e. needles 104) to produce pulsed radio frequency signals (i.e. pulses of energy in the form of, e.g., square waves) across the plurality of needles to affect dermatological tissue (e.g. by heating the dermis to cause collagen contraction) near the plurality of needles—as recited by element [1b] of claim 1 of the '774 patent. Therefore, Mehta discloses element [1b].

2. Dependent Claim 2

(a) The method of treating dermatological tissue of claim 1, including placing a device end surface on or near dermatological tissue to be treated, the end surface including a plurality of needles extendable a desired distance from the end surface

106. Mehta discloses "placing a device end surface on or near dermatological tissue to be treated, the end surface including a plurality of needles extendable a desired distance from the end surface," as recited in claim 2. Mehta's method for treating dermatological tissue involves placing a microneedling device—including a device end surface thereof—on or near a patient's skin and inserting microneedles into the patient's skin to apply treatment.

107. As discussed *supra* Section X.A.1(b), Mehta's microneedling apparatus 200 includes a treatment unit 202 which includes a handpiece 210 and a removable

cartridge 100 having needles 104. As further discussed *supra* Section X.A.1(b), the treatment unit 202 includes a tissue engaging surface 106 that engages with a patient's skin. The tissue engaging surface 106 is, as discussed *supra* Section X.A.1(b), a "device surface" as recited by claim 1 of the '774 patent. In addition to the tissue engaging surface 106, the treatment unit 202 includes a further surface, i.e. the front portion 112 of the removable cartridge 100. Mehta discloses the cartridge 100 has a device end surface (highlighted in red) including a plurality of needles extendable a desired distance from this device end surface, which is a different surface relative to tissue engaging surface 106 discussed above in Section X.A.1(b). Ex.1004 at 15:27-46, FIG. 4A (reproduced below).

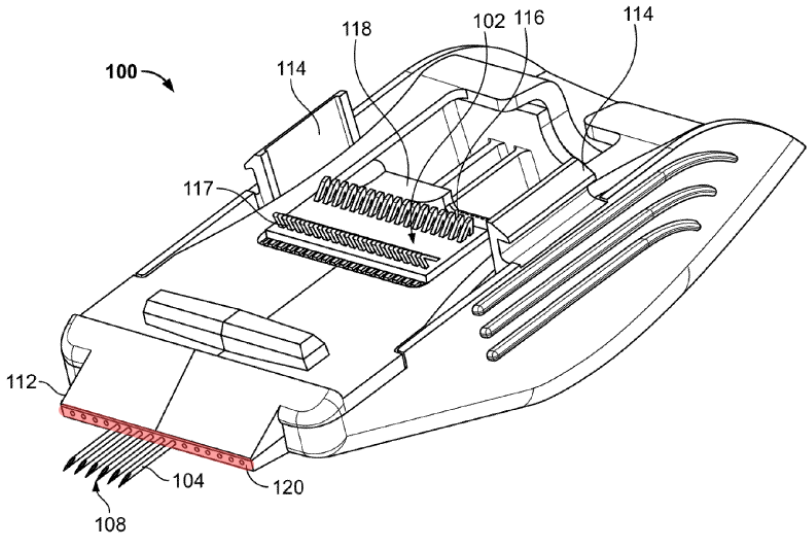

FIG. 4A

EX1004—FIG. 4A

108. During treatment, the front portion 112 of the removable cartridge 100 is placed on an area of tissue 156 directly above a region treated by an active area 122 of a needle 104—as illustrated in FIG. 7A of Mehta, reproduced below.

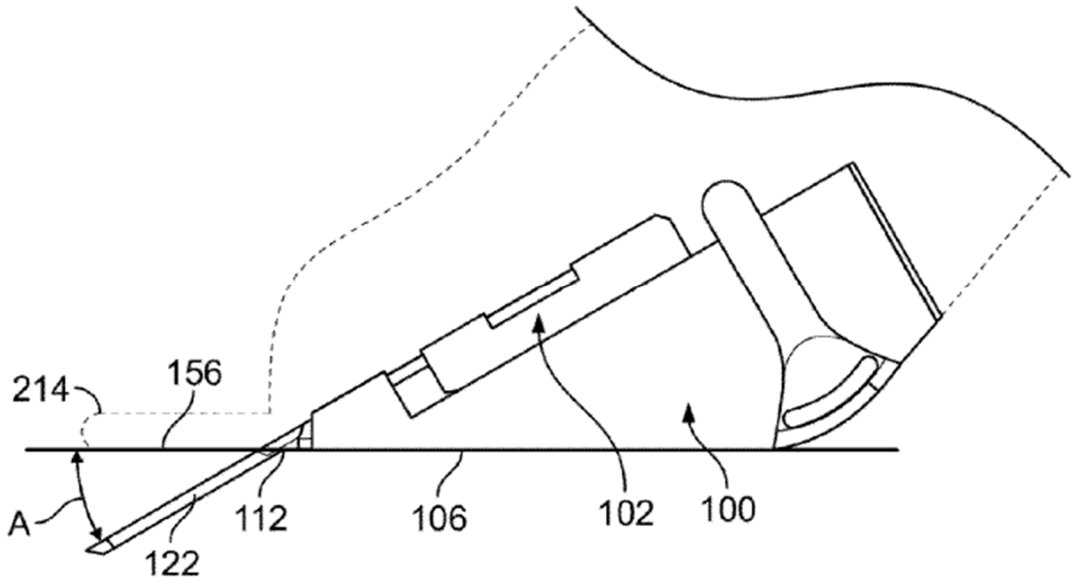

EX1004—FIG. 7A

The front portion 112 of the removable cartridge 100 is further illustrated in FIG. 4C of Mehta, reproduced below:

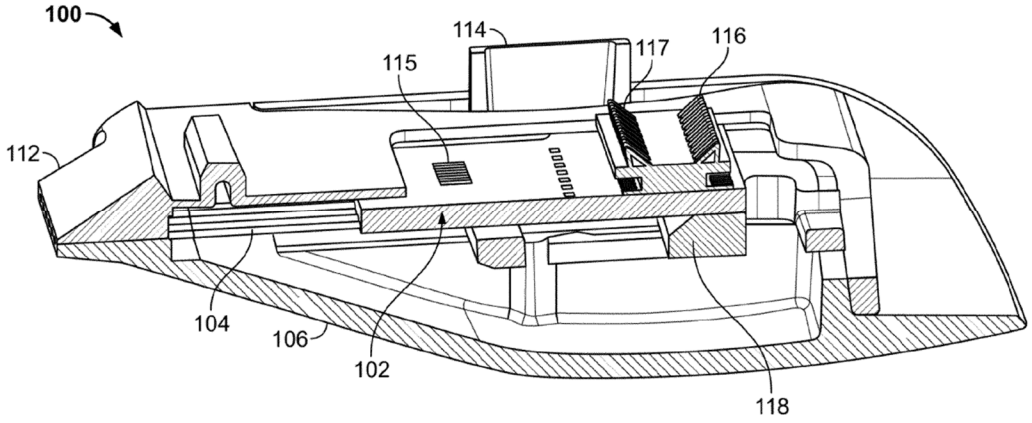

EX1004—FIG. 4C

The front portion 112 of the removable cartridge 100 is a "device end surface" as recited by claim 2 of the '774 patent. The front portion 112 is a surface, it is part of Mehta's microneedling device, and it is disposed at the end of the removable cartridge 100 that is closest to the patient's skin during treatment.

109. As discussed *supra* Section X.A.1(b), the needles 104 are included as part of the tissue engaging surface 106 and are extendable by a desired distance from the tissue engaging surface 106. As is illustrated in FIG. 4C above, the needles 104 are, when in a retracted position, disposed either along or behind the front portion 112 and are, when in an extended position, extended from the front portion 112. Therefore, the needles 104 are also extendable by a desired distance from the front portion 112 of the removable cartridge 100. The distance by which the needles extend from the front portion 112 can be selected by a user, e.g. by choosing to couple a particular removable cartridge 100 having needles 104 of a particular length to the proximal end of the handpiece/device body 210. A user could, for example, choose to couple a cartridge having needles of a length that corresponds to deployment in the dermal region of a patient's tissue when fully extended from the front portion 112 of the removable cartridge 100.

110. Mehta also discloses a stabilization plate 214 having a device end surface including a plurality of needles extendable a desired distance from this

device end surface. EX1004 at 10:40-52, 13:16-36, FIGS. 2A–2C. Mehta discloses the stabilization plate helps to secure skin tissue flatly and to provide a visual frame of reference for the physician during treatment. *See id*. at 10:40-52.

111. Accordingly, Mehta's microneedling treatment method involves placing a device end surface (i.e. the front portion 112 of the removable cartridge 100) on or near dermatological tissue to be treated, the end surface including a plurality of needles (i.e. needles 104) extendable a desired distance from the end surface—as recited by claim 2 of the '774 patent. Therefore, Mehta anticipates claim 2.

112. To the extent Serendia contends that the "[device] end surface" of claim 2 is referring to the same surface as the claimed "[device] surface" of claim 1 it is my opinion that such an interpretation of claim 2 is incorrect, as it ignores the separate antecedents for "device end surface" and "device surface." It is my opinion that under a correct interpretation, the "device end surface" is a surface other than the "device surface" of claim 1, and Mehta discloses both the "device surface" recited by claim 1 (i.e. the tissue engaging surface 106) and "the device end surface" recited by claim 2 (i.e. the front portion 112 of the cartridge 100). Nevertheless, under such an interpretation (where "the device surface" of claim 1 and the "device end surface" of claim 2 refer to the same surface), Mehta anticipates claim 2 for the reasons discussed *supra* Section X.A.1(b).

3. Dependent Claim 3

(a) The method of treating dermatological tissue of claim 2, further including causing the plurality of the extendable needles to extend a desired distance from the end surface

113. Mehta discloses "causing the plurality of the extendable needles to extend a desired distance from the end surface," as recited in claim 3 which depends from claim 2. Mehta's method for treating dermatological tissue involves deploying the microneedles 104 from the end surface 112 of the microneedling device—i.e. causing the plurality of extendable needles to extend a desired distance from the end surface as recited by claim 3.

114. As discussed *supra* Section X.A.2, Mehta discloses a plurality of needles (i.e. needles 104) extendable a desired distance from the end surface (e.g. the front portion 112 of the cartridge 100). Mehta further teaches advancement of the needles 104 for treatment purposes, which includes causing the extendable needles 104 to be extended a desired distance from the end surface. *See, e.g.*, EX1004 at 12:28–30 ("the array 108 can then be inserted into the tissue 10 when advanced from a cartridge 100"), 13:24–33, 21:4–8.

115. Mehta also teaches that the extension of the extendable needles 104 is achieved by energizing a motor. EX1004 at 10:33–39, 13:58–14:4, 15:34–40, 18:21–37. Mehta discloses a motor that is configured to deploy the needles 104 into the patient's skin for treatment purposes, i.e. a motor that is configured to cause the

needles 104 to extend the desired distance from the front portion 112 of the cartridge 100. Specifically, Mehta discloses "a moveable actuator 250" which can be provided in the form of "any number of actuation means, including, but not limited to, pneumatic cylinders, springs, linear actuators, *or other such motors*." EX1004 at 18:34-37 (emphasis added). Mehta further discloses that "[t]he mode of movement of the actuator can include…sliding, rotation, incremental indexing (via a ratchet-type system), [and] stepping (via an [*sic*] step-motor)." EX1004 at 15:36-40. Mehta further teaches that the "motor…provides sufficient force, speed or impact to" the needles "to drive them into tissue" (EX1004 at 13:63-65), and that the motor "moves the shaft 256 where an engagement portion 252 on the shaft couples to" a needle assembly 102 "via a coupling portion 118…to advance and retract" the needles 104. EX1004 at 18:27-31.

116. Accordingly, Mehta's microneedling treatment method further includes causing (i.e. by the motor in the form of actuator 250) the plurality of the extendable needles (i.e. needles 104) to extend a desired distance from the end surface (i.e. the front portion 112 of the removable cartridge 100)—as recited by claim 3 of the '774 patent. Therefore, Mehta anticipates claim 3.

4. Dependent Claim 4

(a) The method of treating dermatological tissue of claim 2, further including energizing a motor coupled to the plurality of extendable needles to cause the plurality of

the extendable needles to extend a desired distance from the end surface

117. Mehta discloses "energizing a motor coupled to the plurality of extendable needles to cause the plurality of the extendable needles to extend a desired distance from the end surface," as recited in claim 4 which depends from claim 2. Mehta's methods for treating dermatological tissue involve energizing the motor 250 coupled to the plurality of extendable needles 104 to cause the plurality of the extendable needles 104 to extend a desired distance from the end surface 112.

118. As discussed above in Section X.A.3, Mehta's microneedling treatment method further includes causing, by the motor in the form of actuator 250, the plurality of the extendable needles 104 to extend a desired distance from the end surface. Mehta's motor is energized by an electrical motor control signal provided by a control system/energy supply unit. *See*, *e.g.*, EX1004 at 10:38-39. Mehta teaches that the control system/energy supply unit "may also include an input/output (I/O) device that allows the physician to input control and processing variables, to enable the controller to generate appropriate command signals." EX1004 at 12:5-8. Appropriate command signals for controlling a motor are electrical motor control signals that cause the motor to create a mechanical force that drives the shaft 256 coupled (via coupling portion 118) to needle assembly 102 to cause the needles 104 to extend a desired distance from the end surface.

119. For example, step-motors, such as the step-motor disclosed by Mehta, EX1004 at 10:33-39, 12:5-8, 15:34-42, 33:30-34, are controlled by providing an electrical motor control signal in the form of a pulse train comprising a number of pulses (the number being equal to a desired number of steps to move) to the step-motor to energize the step-motor and cause it to undergo a desired angular displacement to extend the needles 104 to a desired distance.

120. Mehta discloses an actuator 250 (within the device body 210 of the treatment unit 202) coupled to the array of needles 108 that drives the needles 104 into tissue using a shaft 252. EX1004 at 13:58–61, FIG. 3A. Mehta further teaches that the motor 250 is coupled to the needle assembly 102 "via a coupling portion 118…to advance and retract" the needles 104, (Ex. 1004 at 18: 27-30), with "sufficient force, speed or impact to" the needles "to drive them into tissue." *Id*. at 13:63-65; *see also id*. at 4:63-5:2; 9:40-64, 12:31-58, 13:65–14:1 ("sufficient force…to allow penetration of the probe array into tissue."), 21:1-13, 21:34-42, FIGS. 2B, 7A, 7B, and 7C. Accordingly, Mehta discloses a motor (i.e. actuator 250) coupled (via the shaft 256 and the coupling portion 118 of the assembly 102) to a plurality of extendable needles (i.e. the needles/electrodes/probes 104) that causes the plurality of extendable needles to extend a desired distance from the needle assembly end surface when the motor is energized with a particular signal (i.e. an appropriate command signal from control system/energy supply unit 90).

121. Mehta further teaches that the motor 250 is coupled to the needle assembly 102 "via a coupling portion 118…to advance and retract" the needles 104, (Ex. 1004 at 18: 27-30), with "sufficient force, speed or impact to" the needles "to drive them into tissue." *Id*. at 13:63-65; *see also id*. at 4:63-5:2; 9:40-64, 12:31-58, 13:65–14:1 ("sufficient force…to allow penetration of the probe array into tissue."), 21:1-13, 21:34-42, FIGS. 2B, 7A, 7B, and 7C. Accordingly, Mehta's microneedling treatment method further includes energizing (i.e. via an electrical motor control signal, e.g. in the form of a pulse train) a motor (i.e. actuator 250) coupled to the plurality of extendable needles (i.e. needles 104) to cause the plurality of the extendable needles to extend a desired distance from the end surface—as recited by claim 4 of the '774 patent. Therefore, Mehta anticipates claim 4.

5. Dependent Claim 5

(a) The method of treating dermatological tissue of claim 1, including placing a device inner surface on or near dermatological tissue to be treated, the inner surface including a plurality of needles extending a desired distance from the inner surface

122. Mehta discloses "placing a device inner surface on or near dermatological tissue to be treated, the inner surface including a plurality of needles extending a desired distance from the inner surface," as recited in claim 5 which depends from claim 1. Claim 5 covers needles extending a fixed length relative to the claimed "inner surface," which is a term that does not appear in the description

of the ’774 patent, but rather only in the claims. Mehta discloses needles 104 extending a fixed length from an inner surface of the cartridge 100. Mehta’s method for treating dermatological tissue involves placing the device inner surface on or near dermatological tissue to be treated.

123. As discussed *supra* Section X.A.1(b) and X.A.2(a), Mehta’s microneedling apparatus 200 includes a treatment unit 202 which includes a device surface, e.g., tissue engaging surface 106 that engages with a patient’s skin, and a further device end surface, e.g., the front portion 112 of the removable cartridge 100. Mehta discloses the cartridge 100 has a device inner surface (highlighted in blue) including a plurality of needles extending a desired, fixed distance therefrom. EX1004, FIG. 4B (below). The treatment unit 202 includes the inner surface, depicted in blue in FIG. 4C of Mehta (reproduced below), on the needle assembly 102 of the removable cartridge 100. The device inner surface is a different surface relative to the “device surface” (e.g., the tissue engaging surface 106) discussed above in Section X.A.1(b) and the “device end surface” discussed above in Section X.A.2 (highlighted in red). EX1004 at 16:42-58, FIG. 4B

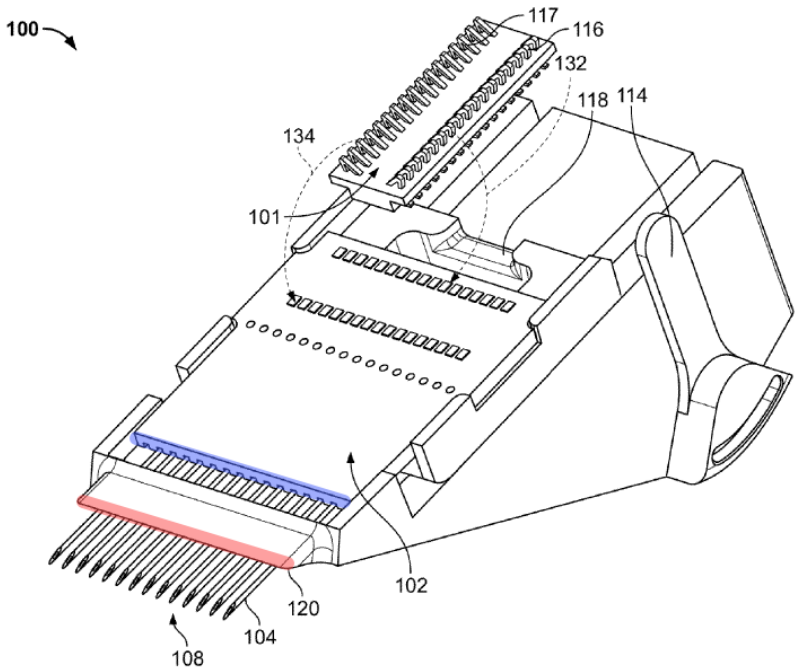

FIG. 4B

EX1004—FIG. 4B

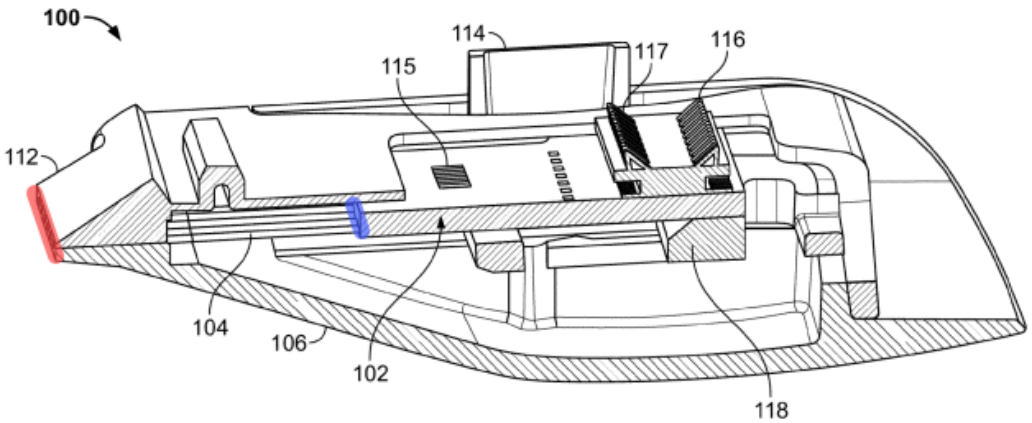

FIG. 4C

EX1004—FIG. 4C

124. Mehta teaches that the assembly 102 and the needles 104 are slidable within the cartridge 100. EX1004 at 14:14-19, 15:34-54, 16:42-58, FIGS. 4A, 4B. The needle assembly 102 is "slidable relative to the cartridge body 100 and the

device body 210" to enable the needles 104 to "be driven into tissue." EX1004 at 14:14-19. As a result, the needles 104 of the needle assembly 102 are configured to "advance and retract relative to the cartridge 100." A POSA would have understood that the needles 104 and the needle assembly 102 have a fixed relationship such that the needles 104 extend from the device inner surface (blue) on needle assembly 102 in a fixed manner. That is, while the needles 104 are extendable from "a device end surface" (e.g. the front portion 112 of the cartridge 100, depicted in red above) and "a device surface" (e.g. the tissue engaging surface 106), the needles 104 are fixed relative to "a device inner surface" (depicted in blue above). The device inner surface (blue) is also inward with respect to the device end surface (red) and the device surface (the tissue engaging surface 106).

125. When the treatment unit 202 is used to provide microneedling treatment, at least the device inner surface is placed near the tissue to be treated, and the needles 104 are inserted with sufficient force to penetrate the dermatological tissue. EX1004, FIG. 2B, *see also*, 16:42-58, FIG. 4B, 13:65–14:1 ("sufficient force…to allow penetration of the probe array into tissue."). Accordingly, a POSA would have understood the needles extend a desired distance from the inner surface because the distance corresponds to a distance that is usable for the treatments discussed in Mehta (as opposed to an undesirable distance where the needles are too long or too short for the intended treatments).

126. Accordingly, Mehta's microneedling treatment method further includes placing a device inner surface (i.e. the surface of needle assembly 102) on or near (i.e. near) dermatological tissue to be treated, the inner surface including a plurality of needles (i.e. needles 104) extending a desired distance from the inner surface—as recited by claim 5 of the '774 patent. Therefore, Mehta anticipates claim 5.

6. Dependent Claim 6

(a) The method of treating dermatological tissue of claim 1, including placing a device inner surface on or near dermatological tissue to be treated, the inner surface including a plurality of needles extending a desired distance from the inner surface with a force sufficient to cause the plurality of needles to penetrate the dermatological tissue

127. Mehta also discloses "placing a device inner surface on or near dermatological tissue to be treated, the inner surface including a plurality of needles extending a desired distance from the inner surface with a force sufficient to cause the plurality of needles to penetrate the dermatological tissue," as recited in claim 6 which depends from claim 1. Claim 6 covers needles extending a fixed length relative to the claimed "inner surface," which is a term that does not appear in the description of the '774 patent, but rather only in the claims. As discussed above in Section X.A.5, Mehta discloses placing the device inner surface on or near dermatological tissue to be treated. As discussed *supra* Section X.A.5, the device inner surface is on the needle assembly 102. Mehta discloses needles 104 extending

a desired, fixed length from an inner surface of the cartridge 100. Furthermore, as discussed *supra* Section X.A.3., Mehta further teaches that a motor is coupled to the needle assembly 102 "via a coupling portion 118…to advance and retract" the needles 104 (EX1004 at 18:27-31) with "sufficient force, speed or impact to" the needles "to drive them into tissue." EX1004 at 13:63-65; see also *id*. at 4:63-5:2; 9:40-64, 12:31-58, 13:65–14:1 ("sufficient force…to allow penetration of the probe array into tissue."), 21:1-13, 21:34-42, FIGS. 2B, 7A, 7B, and 7C.

128. Accordingly, Mehta's microneedling treatment method further includes placing a device inner surface (i.e. the surface of needle assembly 102) on or near (i.e. near) dermatological tissue to be treated, the inner surface including a plurality of needles (i.e. needles 104) extending a desired distance from the inner surface with a force sufficient to cause the plurality of needles to penetrate the dermatological tissue (i.e. sufficient to drive the needles into tissue)—as recited by claim 6 of the '774 patent. Therefore, Mehta anticipates claim 6.

7. Dependent Claim 7

(a) The method of treating dermatological tissue of claim 1, including directing a signal generator electrically coupled to the plurality of needles to produce pulsed radio frequency signals across the plurality of needles to form a bipolar pair

129. Mehta discloses "directing a signal generator electrically coupled to the plurality of needles to produce pulsed radio frequency signals across the plurality of

needles to form a bipolar pair," as recited in claim 7 which depends from claim 1. Mehta's microneedling treatment method utilizes a signal generator that is electrically coupled to the needles and that provides energy thereto so as to percutaneously deliver energy to the patient's skin and thereby provide treatment. *See*, *e.g.*, EX1004 at 2:37-62, 10:53-65, 15:55-59, and 17:3-12.

130. Mehta's microneedling treatment method also involves providing pulsed RF signals to the needles in what is known as "bipolar operation." In bipolar operation, electromagnetic, e.g. RF, radiation is transmitted between pairs of microneedles: one microneedle of the pair acts as a transmitter, and the other microneedle of the pair acts as a receiver. *See*, *e.g.*, EX1004 at 17:59-61, 36:20-25, 37:25-34 (describing pairs of an "active" and a "return" needle and passing current between needles "of opposite polarity"), cl. 1. Mehta teaches both (i) providing every pair of microneedles with an "independent and electrically isolated" power supply channel (EX1004 at 25:45-50) and (ii) coupling multiple pairs of microneedles to the same power supply channel (*see* EX1004 at 18:18-20).

131. As discussed above in Section X.A.1(c), Mehta discloses directing a signal generator electrically coupled to the plurality of needles to produce pulsed radio frequency signals across the plurality of needles. Mehta further discloses that pulsed RF signals are delivered using bipolar electrode pairs and that the pulsed RF signals affect dermatological tissue near the bipolar electrode pairs. *Id.* at 17:59–66,

18:4–8, 9:43-48, 36:20-25, cl. 1. For example, Mehta discloses that a cartridge can include a plurality of electrodes (i.e., needles) that "comprises a plurality of electrode pairs 105" (*id.* at 17:46–52), that "each electrode pair 105 can include an active and return probe 104," and that "adjacent electrode pairs can serve as opposite poles of a circuit." *Id.* at 17:59–66. The electrode pairs can deliver bipolar RF energy for therapeutic treatment. *Id.* at 9:43-48.

132. Accordingly, Mehta's microneedling treatment method further includes directing a signal generator (i.e. energy supply unit 90 or power supply residing in the handpiece) electrically coupled to the plurality of needles (i.e. needles 104) to produce pulsed radio frequency signals (i.e. pulses of energy in the form of, e.g., square waves) across the plurality of needles to form a bipolar pair (i.e. a pair 105)—as recited by claim 7 of the '774 patent. Therefore, Mehta anticipates claim 7.

8. Dependent Claim 9

(a) The method of treating dermatological tissue of claim 1, including directing a signal generator electrically coupled to the plurality of needles to produce pulsed radio frequency signals across the plurality of needles, the plurality of needles to form a bipolar pair and affect dermatological tissue near the bipolar pair

133. Mehta discloses "directing a signal generator electrically coupled to the plurality of needles to produce pulsed radio frequency signals across the plurality of needles, the plurality of needles to form a bipolar pair and affect dermatological tissue near the bipolar pair," as recited in claim 9 which depends from claim 1. As

discussed *supra* Sections X.A.1(c) and X.A.7, Mehta discloses directing a signal generator (i.e. energy supply unit 90 or power supply residing in the handpiece) electrically coupled to the plurality of needles (i.e. needles 104) to produce pulsed radio frequency signals (i.e. pulses of energy in the form of, e.g., square waves) across the plurality of needles. As further discussed *supra* Section X.A.7, Mehta discloses the plurality of needles 104 form bipolar pair (i.e. a pair 105). When pulsed RF signals are provided to the needle bipolar pair, dermatological tissue in the vicinity of the pair is affected. Specifically, the RF energy heats the tissue, which causes collagen to coagulate. Mehta teaches that "[t]he application of heat to the fibrous collagen structure in the dermis 18 causes the collagen to dissociate and contract along its length," which "causes the dermis 18 to reduce in size" (*id*. at 8:54-60) and, as a result, "wrinkles, lines, and other distortions become less visible." *Id*. at 8:60-61.

134. Accordingly, Mehta's microneedling treatment method further includes directing a signal generator (i.e. energy supply unit 90 or power supply residing in the handpiece) electrically coupled to the plurality of needles (i.e. needles 104) to produce pulsed radio frequency signals (i.e. pulses of energy in the form of, e.g., square waves) across the plurality of needles, the plurality of needles to form a bipolar pair (i.e. a pair 105) and affect dermatological tissue (i.e. cause collagen

coagulation) near the bipolar pair—as recited by claim 9 of the ’774 patent. Therefore, Mehta anticipates claim 9.

9. Dependent Claim 10

(a) The method of treating dermatological tissue of claim 1, including directing the signal generator to produce periodic pulsed radio frequency signals across the plurality of needles for a predetermined time interval, each pulse having a width

135. Mehta discloses “directing the signal generator to produce periodic pulsed radio frequency signals across the plurality of needles for a predetermined time interval, each pulse having a width,” as recited in claim 10 which depends from claim 1. As discussed above in Section X.A.1(c), Mehta teaches directing a signal generator electrically coupled to the plurality of needles to produce pulsed radio frequency signals across the plurality of needles, and that the pulsed radio frequency signals may be produced in the form of a square wave. It was common knowledge in the field of skin treatment devices and within the field of electronic signals generally at the time of the invention of the ’774 patent that a square wave has periodic pulses which have a width and a predetermined time interval (or “period”) corresponding to the time from the start of one pulse to the next. For example, FIG. 6 of Mehta illustrates pulsed RF signals (represented by bars 302, 304, 306, 308, 310, 312) produced in a periodic manner, each pulse having a width and a periodic time interval. *Id.* at FIG. 6, 20:13-47.

136. Mehta also teaches that pulsed RF signals are produced across needles 104 for a predetermined treatment time interval. Specifically, Mehta teaches an algorithm in which a time period over which a treatment is carried out is set to between three and five seconds, and that RF treatment should be carried out until the set treatment time has elapsed. *Id.* at FIG. 9E (element 442 ("Treatment Time Elapsed?)) 27:65–28:50 ("Step 2. Set treatment time between (3 and 5 sec)… Step 9. Continue applying RF until treatment time is complete.").

137. Accordingly, Mehta's microneedling treatment method further includes directing the signal generator (i.e. energy supply unit 90 or power supply residing in the handpiece) to produce periodic pulsed radio frequency signals (i.e. pulses of energy in the form of, e.g., square waves) across the plurality of needles (i.e. needles 104) for a predetermined time interval, each pulse having a width—as recited by claim 10 of the '774 patent. Therefore, Mehta anticipates claim 10.

10. Independent Claim 11

138. As discussed in more detail below, Mehta discloses each and every element of independent claim 11. Therefore, Mehta anticipates claim 11 of the '774 patent.

(a) [11pre] An apparatus for treating dermatological tissue

139. Mehta discloses an apparatus for treating dermatological tissue. *See* Section IX.A.1(a) (regarding Element [1pre]). Mehta discloses a microneedling

device (i.e. apparatus) for treating dermatological tissue to, for example, enhance the appearance of a patient's skin. *See*, *e.g.*, EX1004 at 2:37-45. Microneedling treatment devices, like that described by Mehta, both (i) trigger the skin's natural healing response to stimulate collagen production and (ii) percutaneously deliver energy to cause contraction of existing collagen tissue in the skin's dermis. The result of a microneedling treatment provided by such devices is tightened and rejuvenated skin that has fewer visible fine lines and wrinkles.

140. Mehta teaches devices and methods to "treat cosmetic conditions affecting the skin of various body parts." EX1004 at 1:14–19. Mehta's devices and methods target specific layers of the skin for treatment. *See*, *e.g.*, *id*. at 8:45–48 ("[W]hen applying cosmetic treatment to the skin for tightening or removal of wrinkles, it is desirable to deliver energy to the dermis."); *see also id*. at 2:37–62, 3:42–56, 7:52–59; Treatment of the skin—and specific layers thereof—constitutes treatment of dermatological tissue.

141. Accordingly, Mehta discloses [11pre], i.e. an apparatus for treating dermatological tissue.

(b) [11a] a device including a plurality of needles one of extending or extendable a desired distance from a

surface, the desired distance selected to enable the plurality of needles to penetrate dermatological tissue

142. Mehta discloses "a device including a plurality of needles one of extending or extendable a desired distance from a surface," as recited in element [11a]. *Supra* Sections X.A.1(b) (regarding [1a]) and X.A.6.

143. Mehta discloses the desired distance is selected to enable the plurality of needles to penetrate dermatological tissue." For example, Mehta discloses the tips of needles 104 extend a distance from the tissue engaging surface 106 that is chosen to be "able to penetrate tissue." EX1004 at 12:31-58; *see also id*. at 4:63-5:2; 9:40-64, 13:63–14:1 ("sufficient force…to allow penetration of the probe array into tissue."), 21:1-13, 21:34-42, FIGS. 2B, 7A, 7B, and 7C.

(c) [11b] a signal generator electrically coupled to the plurality of extended needles to produce pulsed radio frequency signals across the plurality of needles to affect dermatological tissue near the plurality of needles

144. Mehta discloses element [11b]. *Supra* Section X.A.1(c) (regarding Element [1b]).

11. Dependent Claim 12

(a) The apparatus for treating dermatological tissue of claim 11, wherein the device includes an end surface configured to be placed on or near dermatological tissue to be treated, the end surface including a

plurality of needles extendable a desired distance from the end surface

145. Mehta discloses the additional elements of claim 12. *Supra* Section X.A.2. (claim 2). Therefore—and for the reasons set forth *supra* Section X.A.1. and X.A.10.—Mehta anticipates claim 12.

12. Dependent Claim 13

(a) The apparatus for treating dermatological tissue of claim 12, further including a mechanism for causing the plurality of the extendable needles to extend a desired distance from the end surface

146. Mehta discloses the additional elements of claim 13. *Supra* Section X.A.3. (claim 3) Therefore—and for the reasons set forth *supra* Sections X.A.1. and X.A.11.—Mehta anticipates claim 13.

13. Dependent Claim 14

(a) The apparatus for treating dermatological tissue of claim 12, further including a motor coupled to the plurality of extendable needles that may be directed to cause the plurality of the extendable needles to extend a desired distance from the end surface

147. Mehta discloses the additional elements of claim 14. *Supra* Section X.A.4. (claim 4). Therefore—and for the reasons set forth *supra* Sections X.A.1. and X.A.11.—Mehta anticipates claim 14.

14. Dependent Claim 15

(a) The apparatus for treating dermatological tissue of claim 11, wherein the device includes an inner surface

including a plurality of needles extending a desired distance from the inner surface

148. Mehta discloses the additional elements of claim 15. *Supra* Section X.A.5. (claim 5). Therefore—and for the reasons set forth *supra* Section X.A.1. and X.A.10.—Mehta anticipates claim 15.

15. Dependent Claim 16

(a) The apparatus for treating dermatological tissue of claim 11, wherein the signal generator produces pulsed radio frequency signals across the plurality of needles to form a bipolar pair

149. Mehta discloses the additional elements of claim 16. *Supra* Section X.A.7. (claim 7). Therefore—and for the reasons set forth *supra* Section X.A.1. and X.A.10.—Mehta anticipates claim 16.

16. Dependent Claim 17

(a) The apparatus for treating dermatological tissue of claim 11, wherein the signal generator produces pulsed radio frequency signals across the plurality of needles to form a bipolar pair and affect dermatological tissue near the bipolar pair

150. Mehta discloses the additional elements of claim 17. *Supra* Section X.A.8. (claim 9). Therefore—and for the reasons set forth *supra* Section X.A.1. and X.A.10.—Mehta anticipates claim 17.

17. Dependent Claim 18

(a) The apparatus for treating dermatological tissue of claim 11, wherein the signal generator produces periodic pulsed radio frequency signals across the

plurality of needles for a predetermined time interval, each pulse having a width

151. Mehta discloses the additional elements of claim 18. *Supra* Section X.A.9. (claim 10). Therefore—and for the reasons set forth *supra* Section X.A.1. and X.A.10—Mehta anticipates claim 18.

B. Ground 2: Claims 8 and 19–20 are Obvious over Mehta and Na ’848

152. In my opinion, claims 8 and 19-20 of the ’774 patent are obvious over Mehta in view of Na ’848.

1. Motivation to Combine Mehta and Na ’848

153. It would have been obvious to a POSA prior to the earliest possible priority date of the ’774 patent to combine Mehta with Na ’848 to arrive at the subject matter of claims 8, 19, and 20. Na ’848 contains the same disclosure as the ’774 patent with regard to utilizing pulsed signals having a predetermined time interval in the range of 100 ms to 500 ms and a pulse width in the range of 100 microseconds to 500 microseconds as recited in claims 8, 19, and 20. *Compare* EX1005 at [0039]-[0040], FIGS. 5A-5B *with* EX1001 at 6:13-58, FIGS. 5A-5B.

154. A POSA would have been motivated to combine Mehta and Na ’848 because they are directed to similar technologies and a skilled artisan would have understood the benefits of combining these two references. A POSA would have understood that there was a high likelihood of success in making the combination.

155. Mehta and Na ’848 are both in the same field of endeavor as the challenged claims of the ’774 patent, namely methods and apparatuses for treating dermatological tissue. *Compare* EX1001, claims 8, 19, and 20 *with* EX1004 at 1:14–19, 5:3–6, 19:17–19, 24:46–47 and with EX1005 at [0002], cl. 1, Title. Mehta and Na ’848 are also both reasonably pertinent to the problem faced by the inventor, namely treating dermatological tissue. EX1001 at 1:30-32; *compare* EX1004 at 1:14-19 (Mehta directed to “[treating] tissue in the human body”), *with* EX1005 at ¶ [0002] (Na ’848 directed to “treating [dermatological] tissue”)).

156. Mehta and Na ’848 both disclose an apparatus for treating dermatological tissue and describe methods for using the same. Na ’848 is readily combinable with Mehta because both references are directed to systems and methods of treating dermatological tissue using energized microneedles. *See*, *e.g.*, EX1005 at [0025]-[0027], FIG. 2A; EX1004 at 2:37-41, FIG. 2A.

Na ’848 FIG. 2A	Mehta FIG. 2A

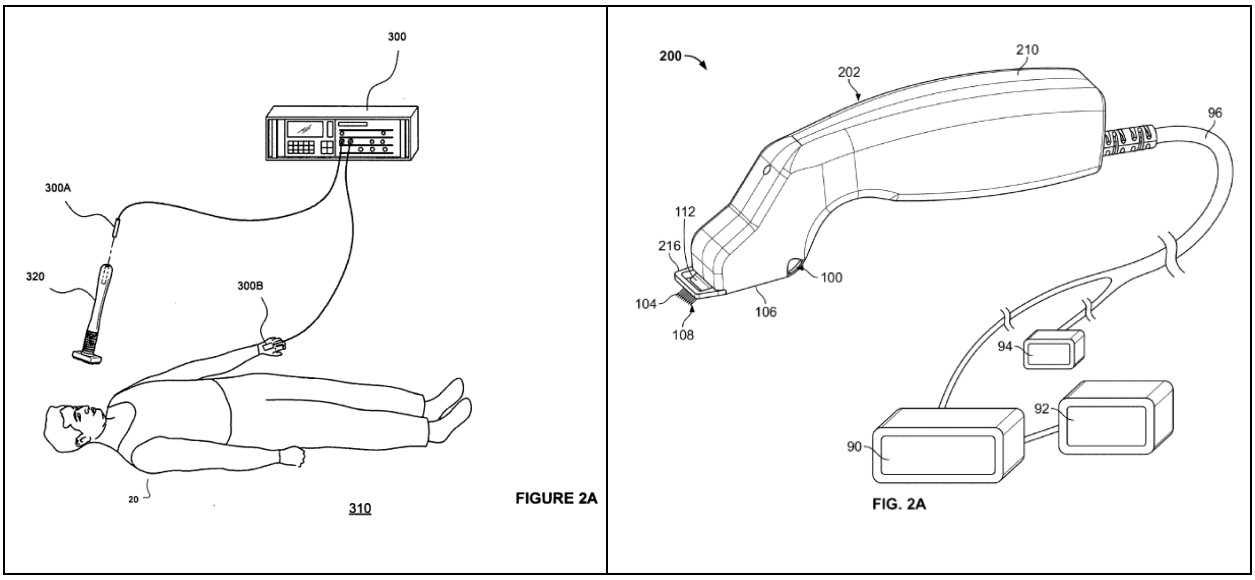

It therefore would have been obvious to a POSA to apply advantageous teachings of Na ’848 to Mehta’s microneedling apparatus and method. Specifically, it would have been obvious to provide pulsed radiofrequency signals to the microneedles of Mehta using the time interval and pulse width parameters taught by Na ’848.

157. A POSA would have been motivated to use and configure the Mehta system following the time interval and pulse width parameters that Na ’848 teaches are efficacious with regard to affecting dermatological cells to treat a patient’s skin, in order to optimize treatments provided using the Mehta system. Na ’848 provides compelling reasons to combine its teachings with those of Mehta. In particular, it would have been obvious to a POSA to implement the pulsed RF signals of Mehta using the time interval and pulse width parameters taught by Na ’848 to achieve the benefits associated therewith, as Mehta discloses a controller that can adjust energy application and/or parameters depending on where a treatment is applied, the

anatomy of the target tissue, and the desired therapeutic effect of the treatment. EX1004 at 18:64-19:8. Mehta also teaches the use of pulsed RF energy having respective parameters, such as "amount of energy, duration, maximum energy delivered, energy wave form or profile (square wave, sinusoidal, triangular, etc.), current, voltage, amplitude, frequency, etc." EX1004 at 20:16-35. Na '848 teaches a specific time interval parameter range of "100 ms to 500 ms" and pulse width parameter range of "100 microsecond (μs) to 500 μs" which "affect [dermatological] cells or chemicals" in the context of treating the dermatological cells on a patient's face, arm, leg, chest, hands, feet, neck or other region. EX1005 at [0039]-[0040].

158. Applying the parameter ranges taught in Na '848 to the system taught in Mehta would have merely constituted optimization of a range or other variable that flows from the normal desire of a POSA to improve upon what was already generally known. In other words, a POSA would have been motivated to implement Mehta's system using time interval and pulse width parameters known from Na '848 to be efficacious with regard to affecting dermatological cells to treat a patient's skin, in order to optimize treatments provided using Mehta's system.

159. A POSA would have known and understood that the pulse width and time parameters disclosed by Na '848 are suitable and advantageous for pulsed radio frequency signals because Na '848 teaches that the "signal generator or module 370 may generate a vary[*sic*, variety] of signals (such as shown in FIGS. 5A to 6) to

vibrate one or more pins 351 electrically coupled to the system 300," and that the signal waveforms 630 and 640 include "several square-wave pulses" applied to needles as is found in the '774 patent. *Compare* EX1005 at FIGS. 2A, 5B, [0026]-[0028], [0040] *with* EX1001 at FIGS. 2A, 5B, 3:38-4:15, 6:32-40. Furthermore, a POSA would have known and understood that the disclosed Na '848 signal generator 370 includes one that produces pulsed radio frequency signals. Mehta discloses that the benefits of utilizing RF energy for treatment of skin were well-known, as Mehta's background discusses prior art going back to 1995 that recognized the advantages of using "radio frequency energy" to achieve a "cosmetically beneficial effect," EX1004 at 1:43-64. The Korean application to which Na '848 claims priority and which is incorporated by reference in Na '848 also teaches the use of RF energy. EX1022 at ¶¶ [0010], [0017], Cl. 5. Thus, a POSA would have been motivated to implement Na '848's teachings concerning the desirable period and pulse width of the signal waveform to the pins in the Mehta method and apparatus to provide a method and apparatus for treating dermatological tissue that advantageously affects dermatological cells.

160. A skilled artisan would have combined Mehta and Na '848 and would have had a reasonable expectation of success in doing so as the variable control of the RF energy supply unit 90 already was disclosed by Mehta. EX1004 at 12:5-14. This combination of Mehta and Na '848 would have yielded results which were

predictable to a POSA and required nothing more than routine engineering well within the capability of a POSA. Mehta teaches that a controller can be utilized to adjust parameters associated with application of pulsed RF signals by a signal generator to achieve a desired therapeutic effect. EX1004 at 18:64-19:8, 20:16-55. Na ’848 teaches specific parameters which are efficacious for certain skin treatments. EX1005 at [0036], [0039]-[0040]. Na ’848 discloses the problem of treating dermatological tissue and discloses configuring the controller 54 to emit electrical signal waveforms to the pins 230, 351, 451 periodically P1 for a predetermined interval T1, where the pulse width T1 is about 100 microseconds to 500 microseconds and the period P1 is about 100 ms to 500 ms to affect dermatological cells as a solution to overcome this problem. EX1005 at [0002]-[0003], [0039]-[0040], [0036]. Thus, in order to apply Na ’848’s parameters to Mehta’s system, a POSA would have only needed to appropriately configure the waveform output by the signal generator using Mehta’s controller. Configuring time interval and pulse width parameters of such a signal waveform using a controller was well within the capabilities of a POSA prior to the earliest possible effective priority date of the ’774 Patent. A POSA would have understood that this modification had a high likelihood of success and was obvious. The combination of Mehta and Na ’848 is merely the predictable use of interchangeable prior art

elements according to their established functions, which would have been obvious to a POSA simply applying ordinary skill and common sense.

2. Dependent Claim 8

(a) The method of treating dermatological tissue of claim 7, wherein the predetermined time interval is about 100 ms to 500 ms and the pulse width is about 100 microseconds to 500 microseconds

161. The Mehta-Na combination includes "the predetermined time interval is about 100 ms to 500 ms and the pulse width is about 100 microseconds to 500 microseconds," as recited in claim 8. Mehta discloses all of the limitations of claims 1 and 7, from which claim 8 depends. *Supra* Sections X.A.1, X.A.7. Na '848 teaches pulsed signals that have a predetermined time interval in the range of 100 ms to 500 ms and a pulse width in the range of 100 microseconds to 500 microseconds, and uses the same description and figures as the '774 Patent to describe the same. EX1005 at [0039]-[0040], Figs. 5A–5B; *supra* Sections X.B.1. It would have been obvious to a POSA to have combined the foregoing teachings of Na '848 regarding time interval and pulse width parameters with the teachings of Mehta regarding production of pulsed RF signals for dermatological treatment. *Supra* Section X.B.1.

162. Accordingly, Mehta's microneedling treatment method, as modified by the teachings of Na '848, includes directing a signal generator (i.e. energy supply unit 90 or power supply residing in the handpiece) electrically coupled to the plurality of needles (i.e. needles 104) to produce pulsed radio frequency signals (i.e.

pulses of energy in the form of, e.g., square waves), wherein the predetermined time interval is about 100 ms to 500 ms (i.e. as taught by Na '848) and the pulse width is about 100 microseconds to 500 microseconds (i.e. as taught by Na '848)—as recited by claim 8 of the '774 patent. Therefore, Mehta in combination with Na '848 renders claim 8 obvious.

3. Dependent Claim 19

(a) The apparatus for treating dermatological tissue of claim 18, wherein the predetermined time interval is about 100 ms to 500 ms

163. The Mehta-Na combination renders claim 19 obvious. Mehta discloses all of the limitations of claims 11 and 18, from which claim 19 depends. *Supra* Sections X.A.10, X.A.17. The Mehta-Na combination includes "the predetermined time interval is about 100 ms to 500 ms," as recited in claim 19. *Supra* Section X.B.2 (regarding claim 8). Na '848 teaches pulsed signals that have a predetermined time interval in the range of 100 ms to 500 ms. EX1005 at [0039]-[0040]. It would have been obvious to a POSA to have combined the foregoing teachings of Na '848 regarding time interval with the teachings of Mehta regarding production of pulsed RF signals for dermatological treatment. *Supra* Section X.C.1.

164. Accordingly, Mehta's microneedling apparatus, as modified by the teachings of Na '848, includes a signal generator (i.e. energy supply unit 90 or power supply residing in the handpiece) electrically coupled to the plurality of extended

needles (i.e. needles 104) to produce pulsed radio frequency signals (i.e. pulses of energy in the form of, e.g., square waves) across the plurality of needles to affect dermatological tissue (e.g. by heating the dermis to cause collagen contraction) near the plurality of needles, wherein the predetermined time interval is about 100 ms to 500 ms (i.e. as taught by Na '848)—as recited by claim 19 of the '774 patent. Therefore, Mehta in combination with Na '848 renders claim 19 obvious.

4. Dependent Claim 20

(a) The apparatus for treating dermatological tissue of claim 18, wherein the pulse width is about 100 microseconds to 500 microseconds

165. The Mehta-Na combination renders claim 20 obvious. Mehta discloses all of the limitations of claims 11 and 18, from which claim 19 depends. *Supra* Sections X.A.10, X.A.17. The Mehta-Na combination includes "the pulse width is about 100 microseconds to 500 microseconds," as recited in claim 20. *Supra* Section X.B.2 (regarding claim 8). Na '848 teaches pulsed signals that have pulse widths in the range of 100 microseconds to 500 microseconds. EX1005 at [0039]-[0040]. It would have been obvious to a POSA to have combined the foregoing teachings of Na '848 regarding pulse widths with the teachings of Mehta regarding production of pulsed RF signals for dermatological treatment. *Supra* Section X.C.1.

166. Accordingly, Mehta's microneedling apparatus, as modified by the teachings of Na '848, includes a signal generator (i.e. energy supply unit 90 or power

supply residing in the handpiece) electrically coupled to the plurality of extended needles (i.e. needles 104) to produce pulsed radio frequency signals (i.e. pulses of energy in the form of, e.g., square waves) across the plurality of needles to affect dermatological tissue (e.g. by heating the dermis to cause collagen contraction) near the plurality of needles, wherein the pulse width is about 100 microseconds to 500 microseconds (i.e. as taught by Na '848)—as recited by claim 20 of the '774 patent. Therefore, Mehta in combination with Na '848 renders claim 20 obvious.

C. Ground 3: Claims 1, 5–11 and 15–20 are Obvious over Na '848 in view of Mehta

167. In my opinion, claims 1, 5–11, and 15–20 of the '774 patent are obvious to a POSA in view of Na '848 and Mehta.

1. Motivation to Combine Na '848 and Mehta

168. It would have been obvious to a POSA prior to the earliest possible priority date of the '774 patent to combine Na '848 with Mehta to arrive at the subject matter of claims 1, 5-11, and 15-20. As discussed above in Section X.B.1., the Na '848 and Mehta are both in the same field of endeavor as the '774 patent and are both reasonably pertinent to the problem faced by the inventor, namely treating dermatological tissue. *Supra* Section X.B.1.

169. Na '848 includes the same FIGS. 2A and 5B (reproduced below) and the same description thereof—i.e., that "electrical signal generation system 300 may generate a vary[*sic*, variety] of signals (such as shown in FIGS. 5A to 6) to vibrate

one or more pins 351 electrically coupled to the system 300 via the internal wire 331 and lead 300A," and that the signal waveforms 630 and 640 include "several square-wave pulses" applied to needles as is found in the '774 patent. *Compare* EX1005 at FIGS. 2A, 5B, [0026]-[0028], [0040] *with* EX1001 at FIGS. 2A, 5B, 3:38-67, 6:32-40.

170. A POSA would have been motivated to combine Na '848 and Mehta because they are directed to similar technologies and a skilled artisan would have understood the benefits of combining advantageous teachings from Mehta's disclosure with the microneedling apparatus and method taught by Na '848. A POSA would have understood that there was a high likelihood of success in making the combination.

171. Mehta is readily combinable with Na '848 because both references are directed to systems and methods for treating dermatological tissue using RF energy to improve the cosmetic condition of a patient's skin. *See*, *e.g.*, EX1004 at 2:37-41, FIG. 2A; EX1005 at [0025]-[0027], FIG. 2A.

Na '848 FIG. 2A	Mehta FIG. 2A

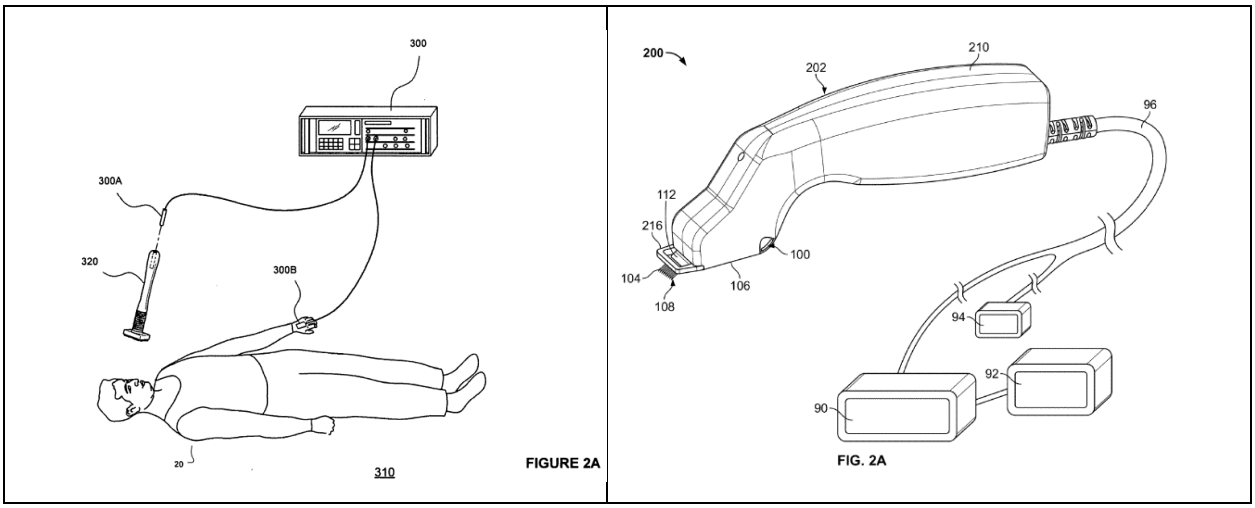

It therefore would have been obvious to a POSA to apply advantageous teachings of Mehta to Na ’848’s microneedling apparatus and method. Specifically, a POSA would have been motivated to use and configure the Na ’848 system in view of Mehta to include the RF signal generator taught by Mehta. Specifically, it would have been obvious to a POSA to configure the Na ’848 treatment system such that it includes the Mehta RF signal generator (e.g., as taught by Mehta in connection with signal generator 90), and a POSA would have been motivated to do so to enable the Na ’848 treatment system to achieve the well-known benefits of utilizing RF energy for skin treatment as taught in Mehta. EX1004 at 1:43-64, 24:46-60.

172. Na ’848 and the ’774 Patent contain the same FIGS. 2A and 5B (reproduced below) and the same corresponding descriptions—i.e., that “electrical signal generation system 300 may generate a vary[*sic*] of signals (such as shown in FIGS. 5A to 6) to vibrate one or more pins 351 electrically coupled to the system

300 via the internal wire 331 and lead 300A," and that the signal waveforms 630 and 640 include "several square-wave pulses" applied to pins. EX1005 at FIGS. 2A, 5B, [0026]-[0028], [0040]; EX1001 at FIGS. 2A, 5B, 3:38-4:15, 6:32-40. Both Na '848 and the '774 Patent use the terms "pins" and "needles" interchangeably throughout their disclosures. EX1005 at [0023], [0024], [0029], [0030], [0032]; EX1001 at 3:8–11, 4:32–40.

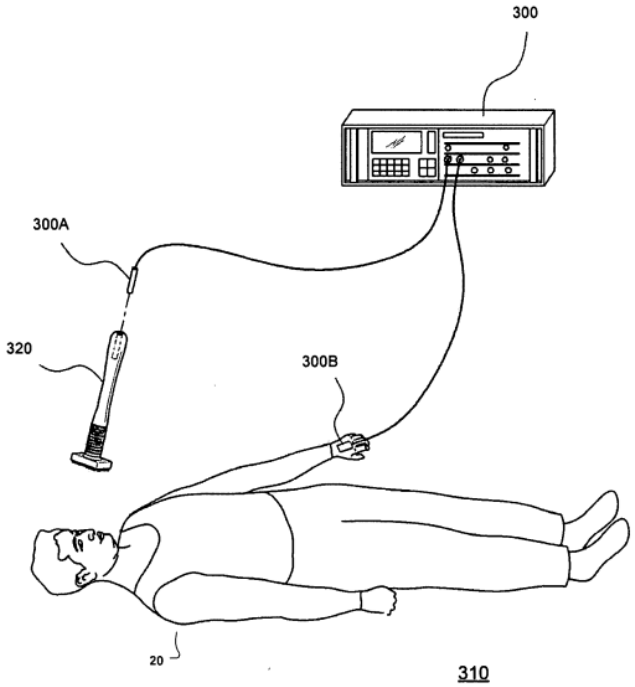

FIGURE 2A

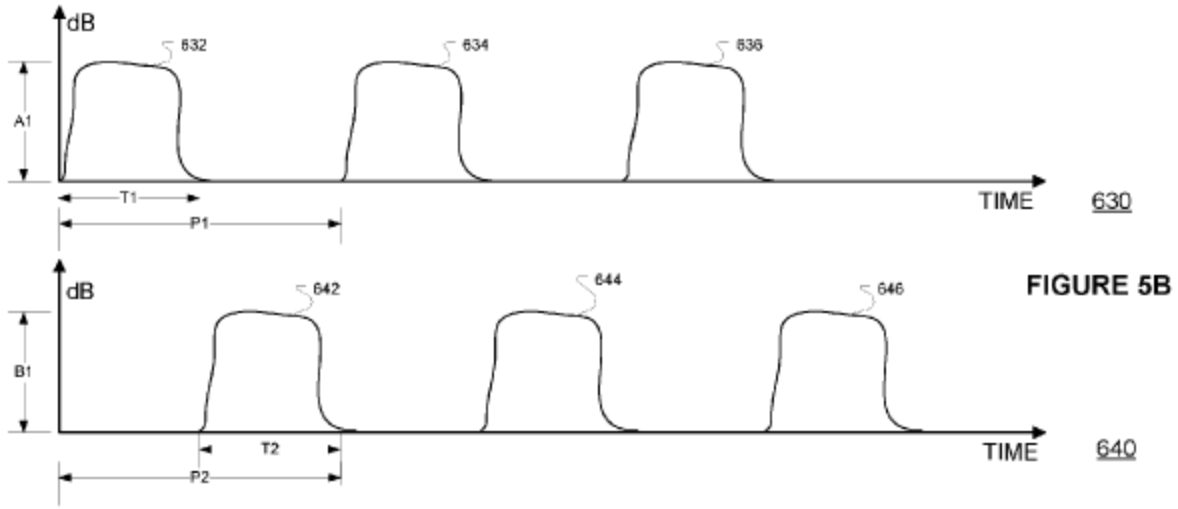

FIGURE 5B

173. A POSA would have considered it obvious to implement the signal generator 300 of Na ’848 as an RF signal generator. Prior to March 3, 2011, RF signal generators were well-known and widely used in microneedling treatment systems—including, e.g., the treatment system taught by Mehta. *Supra*, Section X.A.1(c). It would have been obvious to a POSA as of March 3, 2011, to implement the signal generation system taught in Na ’848 as an RF signal generator in view of the teachings of Mehta regarding RF signal generation. For example, Mehta teaches that using RF energy is advantageous in that it causes denaturing or coagulation of collagen in dermal layers during skin treatment. *Id.* at 24:46–60. Mehta demonstrates that the benefits of utilizing RF energy for dermatological tissue treatment were well-known by acknowledging prior art dating as far back as 1995 that recognized advantages of using RF energy for cosmetic treatments. EX1004 at 1:43–64.

174. The Korean application to which Na ’848 claims priority and which is incorporated by reference in Na ’848 teaches the use of RF energy in connection

with the microneedling apparatus depicted in Fig. 2C of the ’774 patent. EX1005 at [0001]; EX1022 at [0010], [0017], Cl. 5. It therefore would have been obvious to a POSA to apply advantageous principles regarding RF energy discussed in Mehta to the Na ’848 treatment system. Further, the ’774 patent treats use of an RF signal in the form of square wave signals as a matter that would be well understood by a POSA without requiring explanation, as the ’774 patent includes no disclosure regarding how the pulsed RF signals would be produced other than describing that a “radio frequency signal generator (RFSG)” may be used produce the square wave pulses illustrated in FIGS. 5A–6. EX1001 at 10:20–23, 10:48–50. Radio frequency signal generators were well known to a POSA as of March 3, 2011.

175. Na ’848 and Mehta are readily combinable because both references are directed to systems and methods of treating dermatological tissue using energized needles that are deployed or extended into tissue. EX1005 at [0025]-[0027], FIG. 2A; EX1004 at 2:37-41, FIG. 2A. A POSA would have thus found it obvious to apply the principles discussed in Mehta (e.g., the principles relating to advantageous RF signal generation and treatment) to the treatment system taught in Na ’848. Specifically, A POSA would have found it obvious to implement the signal generator 300 as taught in Na ’848 as an RF signal generator as taught in Mehta (in connection with signal generator 90).

176. Mehta discloses the problem of treating dermatological tissue and discloses using an RF signal generator to beneficially affect dermatological cells as a solution to overcome this problem. EX1004 at 1:43-64, 24:46-60. Thus, a POSA would have been motivated to configure the Na ’848 treatment system such that it includes the Mehta RF signal generator (e.g., as taught by Mehta in connection with signal generator 90), and a POSA would have been motivated to do this in order to enable the treatment system of Na ’848 to achieve the well-known benefits of utilizing RF energy for skin treatment, such as the benefits taught in Mehta. EX1004 at 1:43-64, 24:46-60.

177. A POSA would have combined Na ’848 and Mehta and would have had a reasonable expectation of success in doing so as Na ’848 disclosed that the Na ’848 system includes a signal generator that may generate a variety of different signals, EX1005 at [0027], [0028], and Mehta disclosed that an RF signal generator produced a beneficial effect. EX1004 at 1:43-64, 24:46-60.

178. Such a combined implementation of the teachings of Na ’848 and Mehta would have yielded entirely predictable results in terms of improving the efficacy of skin treatment provided via the energized needles of Na ’848. Specifically, Mehta teaches what results should be expected when pulsed RF signals are applied during a microneedling treatment (EX1004 at 1:43-64, 20:13-47, 24:46-60), and the ’774 Patent does not require any further instruction or supporting

disclosure for achieving pulsed radio frequency signals other than instructing a POSA to use an RF signal generator to produce pulsed signals in the form of square-wave signals as a matter that would have been well understood by a POSA without needing any explanation, as there is no disclosure in the ’774 patent regarding how the pulsed RF signals are to be produced other than to say that a “radio frequency signal generator (RFSG)” may be used to produce the square wave pulses of FIGS. 5A-6. EX1001 at 10:20-21, 10:48–50.

179. In view of the foregoing, it is my opinion that combining Na ’848 and Mehta to implement the signal generator of Na ’848 as an RF signal generator would require nothing more than the “predictable use of prior art elements according to their established functions” and yields a “predictable result.” Furthermore, if a POSA were trying to decide what type of signal generator to implement in the treatment system of Na ’848 prior to March 3, 2011, only a the POSA would have been confronted with a finite number of identified, predictable solutions— among them being an RF signal generator. It would have been obvious to implement an RF signal generator in view of the teachings of Mehta regarding the advantages of RF treatment as this combination is an example of a POSA simply applying ordinary skill and common sense.

180. For the reasons I discuss below, Na ’848 in combination with Mehta renders all limitations of claims 1, 5–11, and 15–20 obvious.

2. Independent Claim 1

181. As discussed in more detail below, the Na ’848-Mehta combination renders claim 1 obvious.

(a) [1pre] A method of treating dermatological tissue

182. Na ’848 discloses a method of treating dermatological tissue. Na ’848 teaches methods and apparatuses for “treating dermalogical tissue.” EX1005 at [0002], cl. 1, Title. A POSA would understand that the word “dermalogical” as used in Na ’848 has the same meaning as the word “dermatological” as used in the ’774 patent, as the ’774 patent is a continuation of the ’536 patent, and the ’774 specification simply replaced the word “dermalogical” as it appears throughout the ’536 specification (and in the overlapping portions of Na ’848) with “dermatological.” *Compare* EX1001 at 1:30–32, 1:36–37, cl. 1, Title *with* EX1005 at [0002], [0003], cl. 1, Title and EX1024 at, *e.g.*, 1:25-27, 1:31-32.

183. Accordingly, it is my opinion that Na ’848 teaches [1pre].

(b) [1a] placing a device surface on or near dermatological tissue to be treated, the surface including a plurality of needles one of extending or extendable a desired distance from the surface

184. Na ’848 discloses placing a device surface on or near dermatological tissue to be treated, the surface including a plurality of needles one of extending or extendable a desired distance from the surface, as recited in Element [1A]. As discussed above in Sections VI.A, the ’774 patent discloses (and claims) two

alternative embodiments—one having "a plurality of needles… extending… a desired distance from the surface" (e.g., FIG. 2B of the '774 Patent) and the other having "a plurality of needles… extendable a desired distance from the surface" (e.g., FIGS. 9C-9D of the '774 Patent).

185. Na '848 teaches the embodiment having "a plurality of needles… extending… a desired distance from the surface." EX1005 at FIG. 2B, [0026] (substantially identical to EX1001 at FIG. 2B, 3:45-54). These cited portions of both Na '848 and the '774 patent depict and/or describe the desired distance being claimed in the '774 patent as "length A" from a device surface, which is highlighted in green in the partial reproduction of FIG. 2B below. EX1005, Fig. 2B.

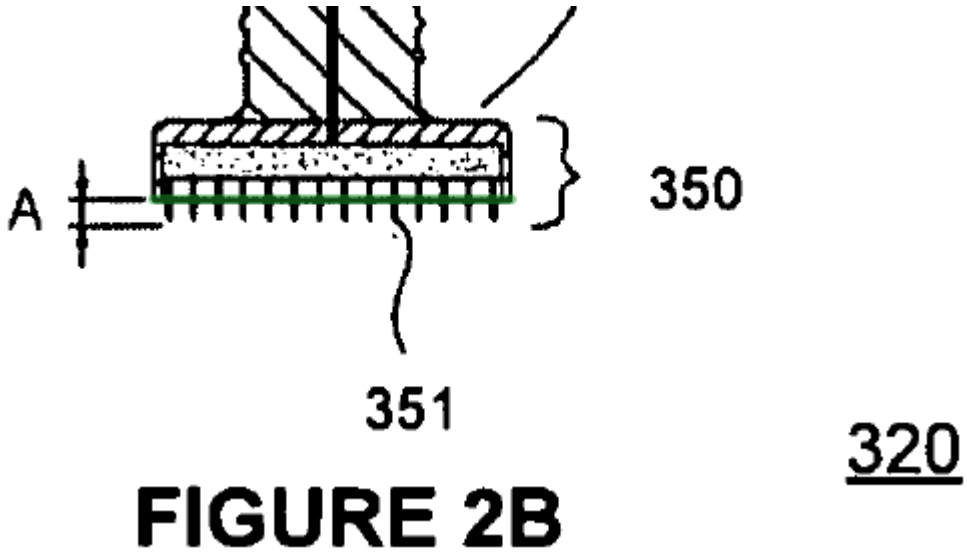

Na '848 and the '774 patent both further describe that this device surface is placed on or near dermatological tissue to be treated. EX1005 at [0042], FIG. 7A (substantially identical to EX1001 at 7:11-28, FIG. 7A).

186. Accordingly, it is my opinion that Na ’848 teaches [1a].

(c) [1b] directing a signal generator electrically coupled to the plurality of extended needles to produce pulsed radio frequency signals across the plurality of needles to affect dermatological tissue near the plurality of needles

187. The Na ’848-Mehta combination includes “directing a signal generator electrically coupled to the plurality of extended needles to produce pulsed radio frequency signals across the plurality of needles to affect dermatological tissue near the plurality of needles,” as recited in includes Element [1b]. Na ’848 teaches “directing a signal generator electrically coupled to the plurality of extended needles to produce pulsed radio frequency signals across the plurality of needles to affect dermatological tissue near the plurality of needles.” *See* EX1005 at FIGS. 2A, 5B, [0026]-[0028], [0040]; *supra* Section X.C.1. For example, Na ’848 teaches that “electrical signal generation system 300 may generate a vary[*sic*] of signals (such as shown in FIGS. 5A to 6) to vibrate one or more pins 351 electrically coupled to the system 300 via the internal wire 331 and lead 300A.” EX1005 at [0027]. Na ’848 also teaches that this vibration of pins affects dermatological tissue by “increas[ing] the micro-wound or cut formed in dermis by the pin 351.” *Id*. Na ’848 further teaches that the signals generated by the signal generation system 300 and shown in FIGS. 5A-6, which are applied to the pins, include pulsed square wave signals. *Id.* at [0039]-[0041]. When the system taught in Na ’848 is used to provide treatment, the

signal generation system 300 is directed to produce the pulsed signals. EX1005 at [0027], [0042], FIGS. 5A-5B, 7A.

188. Additionally, it would have been obvious to a POSA to modify Na ’848 in view of Mehta to arrive at this claim feature. As discussed above in Section X.A.1(c) and X.C.1., Mehta teaches an RF signal generator which produces pulsed radio frequency signals in the same context as the ’774 Patent, and in particular with respect to an RF microneedling device being utilized to provide dermatological treatment. Further, as discussed above in Section X.C.1, a POSA would have been motivated to implement the signal generation system 300 of Na ’848 as an RF signal generator. Doing so would produce pulsed RF signals in view of the teachings of Mehta regarding the advantages of utilizing pulsed RF signals for dermatological treatment. In addition, a POSA would have readily recognized that the combination of Na ’848 with Mehta would have merely involved known components performing their established functions to yield predictable results.

189. Accordingly, it is my opinion that Na ’848 in combination with Mehta renders element [1b] obvious.

3. Dependent Claim 5

(a) The method of treating dermatological tissue of claim 1, including placing a device inner surface on or near dermatological tissue to be treated, the inner surface

including a plurality of needles extending a desired distance from the inner surface

190. Na ’848 discloses “placing a device inner surface on or near dermatological tissue to be treated, the inner surface including a plurality of needles extending a desired distance from the inner surface,” as recited in claim 5. Claim 5 covers needles extending a fixed length relative to the claimed “inner surface,” which is a term that does not appear in the description of the ’774 patent, but rather only in the claims. FIG. 2B of Na ’848, which is partially reproduced below, illustrates an apparatus 320 as having a device inner surface (highlighted in blue) including a plurality of needles extending a desired distance (annotated as A') from this inner surface. EX1005 at [0026], [0030], FIGS. 2B, 2F. This inner surface is a different surface relative to the device surface (highlighted in green) discussed above in Section X.C.2(b). *Id.* at [0030], FIG. 2F; *supra* Section X.C.2(b).

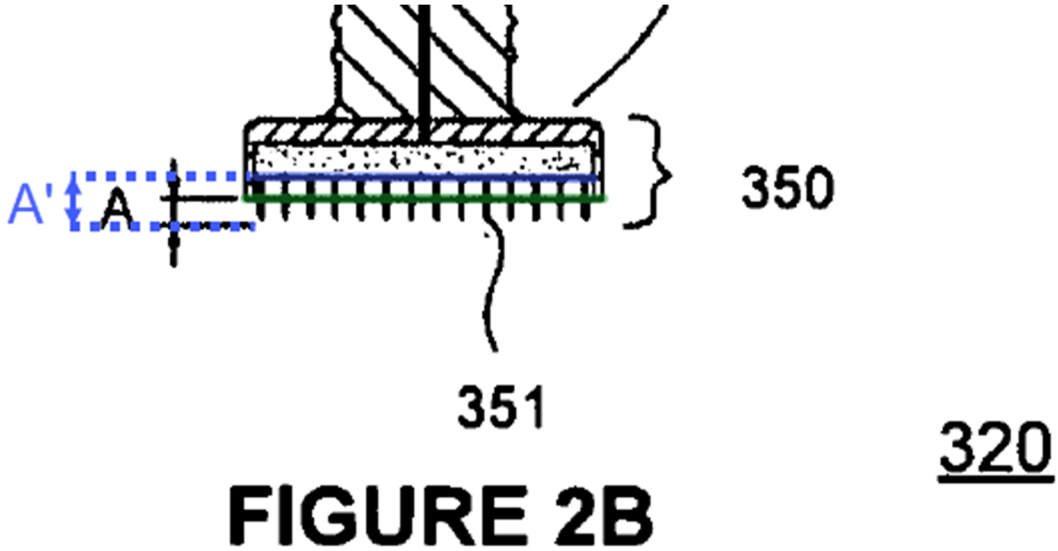

FIGURE 2B

191. A POSA would have understood that when apparatus 320 is used for dermatological treatment, that the device inner surface is placed near dermatological tissue that is to be treated by pressing the entire apparatus 320 firmly against the dermatological tissue. EX1005 at [0042], FIG. 7A.

192. Accordingly, it is my opinion that Na '848 teaches the additional limitations of claim 5, and that Na '848 in combination with Mehta renders claim 5 obvious.

4. Dependent Claim 6

(a) The method of treating dermatological tissue of claim 1, including placing a device inner surface on or near dermatological tissue to be treated, the inner surface including a plurality of needles extending a desired distance from the inner surface with a force sufficient to cause the plurality of needles to penetrate the dermatological tissue

193. Na '848 discloses "placing a device inner surface on or near dermatological tissue to be treated, the inner surface including a plurality of needles extending a desired distance from the inner surface," as recited in claim 5, and "placing a device inner surface on or near dermatological tissue to be treated, the inner surface including a plurality of needles extending a desired distance from the inner surface with a force sufficient to cause the plurality of needles to penetrate the dermatological tissue," as recited in claim 6. Claim 6 covers needles extending a fixed length relative to the claimed "inner surface," which is a term that does not

appear in the description of the ’774 patent, but rather only in the claims. Claim 6 includes the same limitations as claim 5, but also adds that the device is placed “with a force sufficient to cause the plurality of needles to penetrate the dermatological tissue. As discussed above in Section X.C.3, Na ’848 teaches the limitations of claim 5. *Supra* Section X.C.3. Additionally, Na ’848 teaches that the apparatus 320 should be pressed against dermatological tissue to be treated “firmly enough to embed one or more pins 251, 351, 451” in the tissue. EX1005 at [0042]. Thus, a POSA would have understood that during use of the apparatus 320, the needles 351 are firmly pressed against dermatological tissue with sufficient force to penetrate it. *Id.* at [0042], FIG. 7A.

194. Accordingly, it is my opinion that Na ’848 teaches the additional limitations of claim 6, and that Na ’848 in combination with Mehta renders claim 6 obvious.

5. Dependent Claim 7

(a) The method of treating dermatological tissue of claim 1, including directing a signal generator electrically coupled to the plurality of needles to produce pulsed radio frequency signals across the plurality of needles to form a bipolar pair

195. Na ’848 discloses “directing a signal generator electrically coupled to the plurality of needles to produce pulsed radio frequency signals across the plurality of needles to form a bipolar pair,” as recited in claim 7. As discussed above in

Section X.C.2(c), Na ’848 in view of Mehta renders obvious directing a signal generator electrically coupled to the plurality of needles to produce pulsed radio frequency signals across the plurality of needles. *Supra* Section X.C.2(c). Na ’848 further teaches bipolar operation of the signal generator to form bipolar pairs among the plurality of needles when applying pulsed signals, EX1005 at [0029], and teaches that producing the pulsed signals affects dermatological tissue near the needles by “increas[ing] the micro-wound or cut formed in the dermis by the pin 351.” *Id.* at [0027]-[0028].

196. In addition, Mehta teaches that pulsed RF signals are delivered using bipolar electrode pairs. *Supra* Section X.A.7.

197. Accordingly, it is my opinion that Na ’848 teaches the additional limitations of claim 7. It is also my opinion that it would have been obvious to a POSA to have used the Na ’848-Mehta combination as described in Mehta to deliver pulsed RF signals using bipolar electrode pairs, and a POSA would have been motivated to do so to obtain the therapeutic benefits taught in Mehta. Accordingly, Na ’848 in combination with Mehta renders claim 7 obvious.

6. Dependent Claim 8

(a) The method of treating dermatological tissue of claim 7, wherein the predetermined time interval is about

100 ms to 500 ms and the pulse width is about 100 microseconds to 500 microseconds

198. Na ’848 discloses that “the predetermined time interval is about 100 ms to 500 ms and the pulse width is about 100 microseconds to 500 microseconds,” as recited in claim 8. Na ’848 teaches that period P1, P2 of the pulsed signals depicted in FIG. 5B (reproduced below) “may [be] from 100 ms to 500ms” and that the pulse width P1, P2 of the pulsed signals depicted in FIG. 5B “may be about 100 microseconds (µs) to 500 µs.” EX1005 at [0039]-[0040], FIG. 5B.

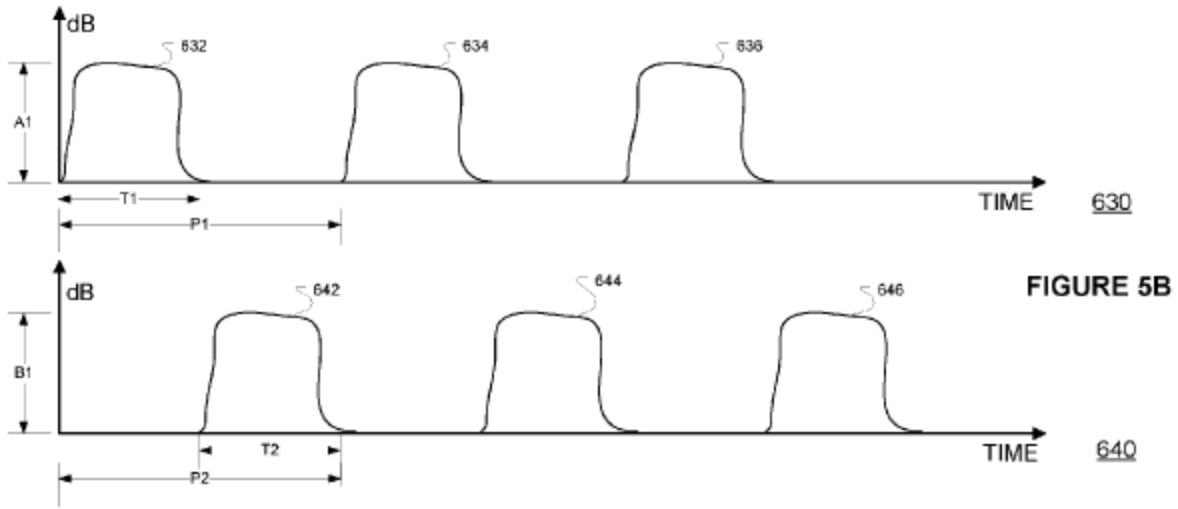

FIGURE 5B

199. Accordingly, it would have been obvious to a POSA to utilize the ranges taught in Na ’848 as predetermined time interval and pulse width parameters when producing pulsed RF signals, *Supra* Section X.C.2(c)). Specifically, a POSA would have considered it obvious to use these time interval and pulse width parameters because Na ’848 expressly promotes them as acceptable parameters “to affect dermalogical cells.” EX1005 at [0040]. Indeed, the only places where the ’774

specification mentions the foregoing parameter ranges are in portions of the ’774 patent which overlap with Na ’848. *Compare* EX1001 at 6:13–58, FIGS. 5A–5B *with* EX1005 at [0039], [0040], FIGS. 5A–5B. Therefore, the only possible written description support for this limitation in the ’774 patent is substantially identical to the teachings of Na ’848. *Id.*

200. Accordingly, it is my opinion that Na ’848 teaches the additional limitations of claim 8, and that Na ’848 in combination with Mehta renders claim 8 obvious.

7. Dependent Claim 9

(a) The method of treating dermatological tissue of claim 1, including directing a signal generator electrically coupled to the plurality of needles to produce pulsed radio frequency signals across the plurality of needles, the plurality of needles to form a bipolar pair and affect dermatological tissue near the bipolar pair

201. Na ’848 discloses “directing a signal generator electrically coupled to the plurality of needles to produce pulsed radio frequency signals across the plurality of needles, the plurality of needles to form a bipolar pair and affect dermatological tissue near the bipolar pair,” as recited in claim 9. Claim 9 includes the same limitations as claim 7, but also adds that the produced pulsed radio frequency signals “affect dermatological tissue near the bipolar pair.” As discussed above in Section X.C.5, Na ’848 and Mehta each teach the limitations of claim 7. *Supra* Section X.C.5. Additionally, Na ’848 teaches that producing pulsed signals affects

dermatological tissue near the needles by "increas[ing] the micro-wound or cut formed in the dermis by the pin 351" EX1005 at [0027]-[0028].

202. Furthermore, Mehta teaches that pulsed RF signals delivered using bipolar electrode pairs affect dermatological tissue near the bipolar electrode pairs. *Supra* Sections X.A.7, X.A. In particular, Mehta teaches using RF signals delivered via probes (which includes the pulsed RF signals described above in Section X.A.7) to treat tissue without affecting an outer layer of skin by delivering energy that can break down subcutaneous fat cells or other specifically targeted layers of tissue, thereby aiding in body contouring, cellulite reduction, and treating skin surface imperfections and blemishes. EX1004 at Abstract, 1:14–19, 2:37–57; *supra* Section X.A.7.

203. Accordingly, it is my opinion that Na '848 teaches the additional limitations of claim 9, and that Na '848 in combination with Mehta renders claim 9 obvious.

8. Dependent Claim 10

(a) The method of treating dermatological tissue of claim 1, including directing the signal generator to produce periodic pulsed radio frequency signals across the plurality of needles for a predetermined time interval, each pulse having a width

204. The Na '848-Mehta combination includes "directing the signal generator to produce periodic pulsed radio frequency signals across the plurality of

needles for a predetermined time interval, each pulse having a width," as recited in claim 10. As discussed above in Section X.C.2(c), Na '848 in view of Mehta renders obvious directing the signal generator electrically to produce pulsed radio frequency signals across the plurality of needles. *Supra* Section X.C.2(c). Further, as discussed above in Section X.C.6, Na '848 teaches particular ranges for time intervals and pulse widths of pulsed radio frequency signals. *Supra* Section, X.C.6; EX1005 at [0040]. Thus, Na '848 in view of Mehta further render obvious pulsed radio frequency signals being produced for a predetermined time interval and with each pulse having a width. Na '848 further teaches that the pulsed signals are periodic. EX1005 at [0039]-[0040].

205. A POSA would have understood that the pulsed RF signals taught in Mehta, which may be produced in the form of a square wave (EX1004 at 20:29–35), are periodic and thus may have both a predetermined time interval and predetermined pulse width. *Supra* Section X.A.9.

206. Accordingly, it is my opinion that Na '848 and Mehta each teach the additional limitations of claim 10, and that Na '848 in combination with Mehta renders claim 10 obvious.

9. Independent Claim 11

207. As discussed in more detail below, the Na '848-Mehta combination renders claim 11 obvious.

(a) [11pre] An apparatus for treating dermatological tissue

208. As discussed above in Section X.C.2(a), Na '848 teaches methods and systems for "treating dermalogical tissue," and a POSA would understand the word "dermalogical" to have the same meaning as the word "dermatological" as used in the '774 Patent. *Supra* Section X.C.2(a); EX1005 at [0002], cl. 1, Title; see also EX1024 at 1:25-27, 1:31-32.

209. Accordingly, it is my opinion that Na '848 teaches element [11pre].

(b) [11a] a device including a plurality of needles one of extending or extendable a desired distance from a surface, the desired distance selected to enable the plurality of needles to penetrate dermatological tissue

210. Na '848 teaches Element [11a]. *See supra* Section X.C.2(b). As discussed above in Section X.C.2(b), Na '848 teaches an embodiment having "a plurality of needles… extending… a desired distance from [a] surface," and a desired distance corresponding to "length A" as illustrated in FIG. 2B. *Supra* Section X.C.2(b); EX1005 at FIG. 2B, [0026] (substantially identical to EX1001 at FIG. 2B, 3:45–54). Na '848 teaches that the desired distance (A) was selected to enable the plurality of needles to penetrate dermatological tissue. EX1005 at [0042] ("A user, clinician, or equipment may place an apparatus… 360 [depicted in FIG. 2B]… on dermalogical cells to be treated (activity 741) including pressing the apparatus

against the cells firmly enough to embed one or more pins… 351 [depicted in FIG. 2B]… in the cells.”).

211. Accordingly, it is my opinion that Na ’848 teaches [11a].

(c) [11b] a signal generator electrically coupled to the plurality of extended needles to produce pulsed radio frequency signals across the plurality of needles to affect dermatological tissue near the plurality of needles

212. The Na ’848-Mehta combination includes Element [11b]. *Supra* Section X.C.2(c). As discussed above in Section X.C.2(c), Na ’848 teaches a signal generator that generates signals to vibrate pins to affect dermatological tissue by “increas[ing] the micro-wound or cut formed in dermis by the pin 351.” *Supra* Section X.C.2(c); EX1005 at [0027]-[0028]. Na ’848 teaches that the signals generated by the signal generation system 300 and shown in FIGS. 5A–6, which are applied to the pins, include pulsed square wave signals. *Supra* Section X.C.2(c); EX1005 at [0039]-[0042].

213. Additionally, it would have been obvious to a POSA to modify Na ’848 in view of Mehta to arrive at this claim feature. As discussed above in Section X.A.1(c) and X.C.1, Mehta teaches an RF signal generator which produces pulsed radio frequency signals in the same context as the ’774 patent, and in particular with respect to an RF microneedling device being utilized to provide dermatological treatment. Further, as discussed above in Section X.C.1, a POSA would have been

motivated to implement the signal generation system 300 of Na ’848 as an RF signal generator, as doing so would produce pulsed RF signals in view of the teachings of Mehta regarding the advantages of utilizing pulsed RF signals for dermatological treatment. In addition, a POSA would have readily recognized that the combination of Na ’848 with Mehta would have merely involved known components performing their established functions to yield predictable results.

214. Accordingly, it is my opinion that Na ’848 in combination with Mehta renders [11b] obvious.

10. Dependent Claim 15

(a) The apparatus for treating dermatological tissue of claim 11, wherein the device includes an inner surface including a plurality of needles extending a desired distance from the inner surface

215. Claim 15 recites limitations which are also recited in claim 5. As discussed above in Section X.C.3, Na ’848 in combination with Mehta renders claim 5 obvious. *Supra* Section X.C.3. Accordingly, it is my opinion that Na ’848 in combination with Mehta renders 15 obvious.

11. Dependent Claim 16

(a) The apparatus for treating dermatological tissue of claim 11, wherein the signal generator produces pulsed radio frequency signals across the plurality of needles to form a bipolar pair

216. Claim 16 recites limitations which are also recited in claim 7. As discussed above in Section X.C.5, Na ’848 in combination with Mehta renders claim

7 obvious. *Supra* Section X.C.5. Accordingly, it is my opinion that Na ’848 in combination with Mehta renders 16 obvious.

12. Dependent Claim 17

(a) The apparatus for treating dermatological tissue of claim 11, wherein the signal generator produces pulsed radio frequency signals across the plurality of needles to form a bipolar pair and affect dermatological tissue near the bipolar pair

217. Claim 17 recites limitations which are also recited in claim 9. As discussed above in Section X.C.7, Na ’848 in combination with Mehta renders claim 9 obvious. *Supra* Section X.C.7. Accordingly, it is my opinion that Na ’848 in combination with Mehta renders 17 obvious.

13. Dependent Claim 18

(a) The apparatus for treating dermatological tissue of claim 11, wherein the signal generator produces periodic pulsed radio frequency signals across the plurality of needles for a predetermined time interval, each pulse having a width

218. Claim 18 recites limitations which are also recited in claim 10. As discussed above in Section X.C.8, Na ’848 in combination with Mehta renders claim 10 obvious. *Supra* Section X.C.8. Accordingly, it is my opinion that Na ’848 in combination with Mehta renders 10 obvious.

14. Dependent Claim 19

(a) The apparatus for treating dermatological tissue of claim 18, wherein the predetermined time interval is about 100 ms to 500 ms

219. Claim 19 recites limitations which are also recited in claim 8. As discussed above in Section X.C.6, Na '848 in combination with Mehta renders claim 8 obvious. *Supra* Section X.C.6. Although the dependency of claim 8 (which is dependent from claim 7) is not exactly analogous to the dependency of claim 19 (which is dependent from claim 18), my opinions above in Section X.C.6 apply with equal force to claim 19. Accordingly, it is my opinion that Na '848 in combination with Mehta renders 19 obvious.

15. Dependent Claim 20

(a) The apparatus for treating dermatological tissue of claim 18, wherein the pulse width is about 100 microseconds to 500 microseconds

220. Claim 20 recites limitations which are also recited in claim 8. As discussed above in Section X.C.6, Na '848 in combination with Mehta renders claim 8 obvious. *Supra* Section X.C.6. Although the dependency of claim 8 (which is dependent from claim 7) is not exactly analogous to the dependency of claim 20 (which is dependent from claim 18), my opinions above in Section X.C.6 apply with equal force to claim 20. Accordingly, it is my opinion that Na '848 in combination with Mehta renders 20 obvious.

D. Ground 4: Claims 1–7 and 9–18 are obvious over Mehta and Lee

221. In my opinion, claims 1–7 and 9–18 of the ’774 patent are obvious over Mehta in view of Lee.

1. Motivation to Combine Mehta and Lee

222. It would have been obvious to a POSA prior to the earliest possible priority date of the ’774 patent to combine Mehta with Lee to arrive at the subject matter of claims 1-7 and 9-18. As discussed above in Section X.B.1., Mehta is in the same field of endeavor as the ’774 patent and is reasonably pertinent to the problem faced by the inventor. Lee is also in the same field of endeavor as the ’774 patent, namely systems and methods for treating dermatological tissue. EX1011 at <13>-<18>.

223. A POSA would have been motivated to combine Mehta and Lee because they are directed to similar technologies and a skilled artisan would have understood the benefits of combining these two references. A POSA would have understood that there was a high likelihood of success in making the combination. Mehta and Lee are readily combinable because both references are directed to systems and methods for treating dermatological tissue using needles driven into skin tissue by a step-motor. *See*, *e.g.*, EX1011 at <23>–<26>, <45>–<53>, <60>–<63>, FIGS. 2–4b; EX1004 at 15:34–40, FIG. 2B. A POSA would have considered

it obvious to apply advantageous principles discussed in Lee to the treatment systems taught in Mehta.

Lee FIG. 2	Mehta FIG. 2B
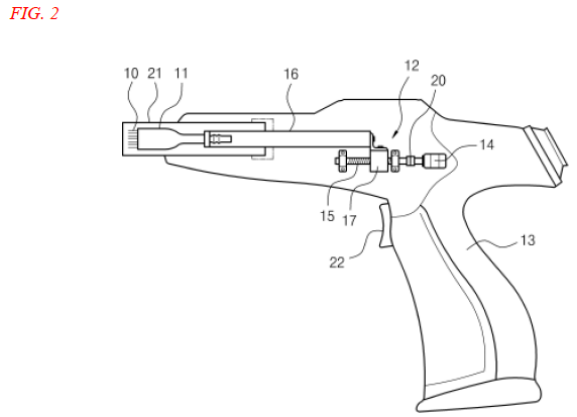	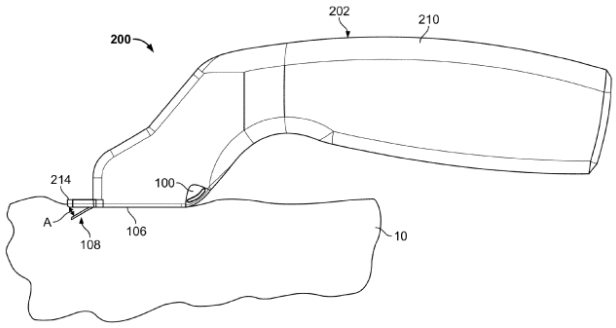 FIG. 2B

It therefore would have been obvious to a POSA to apply advantageous principles discussed in Lee to Mehta's treatment system. Specifically, it would have been obvious to a POSA to modify Mehta, based on the teachings of Lee, to allow a user to set a particular extension distance or insertion depth of the needles 104 and/or incrementally increase or decrease, by one or more steps of a step-motor, an extension distance and/or insertion depth of the needles.

224. Lee teaches the use of a step-motor for precise control of needle insertion depth along the axis of needle extension. EX1011 at <45>, <50>, <69>, FIGS. 4a-4b. Lee teaches a "position-controllable" motor 14, which may be a "stepping motor," that rotates to move a slider 17 and needle mount 11, which allows for precise control of an insertion depth of the needles along the axis of needle

extension. EX1011 at <46>, <50>, Figs. 4a-4b, <69>. Lee further teaches that the extendable needles are extended and reciprocally retracted multiple times by repetitively driving the motor back and forth for dermatological treatment. EX1011 at Figs. 4a-4b, <58>, <62>–<63>.

225. A POSA would have been motivated to use and configure the Mehta system in view of Lee to include the stepper motor taught by Lee to precisely control a needle extension distance along the axis of extension, by following Lee's teaching of using a stepper motor for precise control of needle insertion depth along the axis of needle extension. EX1011 at <45>, FIGS. 4a-4b. Lee provides compelling reasons to combine its teachings with those of Mehta.

226. As discussed *supra* Section X.A.1(a), Mehta discloses a microneedling apparatus that includes a motor (i.e. actuator 250) coupled (via the shaft 256 and the coupling portion 118 of the assembly 102) to a plurality of extendable needles (i.e. the needles/electrodes/probes 104) that causes the plurality of extendable needles to extend a desired distance from the needle assembly end surface when the motor is energized with a command signal from control system/energy supply unit 90. Mehta teaches that motor provides for a "mode of movement" of the needles that can include "incremental indexing (via a ratchet-type system), [and] stepping (via an [*sic*] step-motor)." EX1004 at 15:36-40. With either a ratchet-type system or a step-motor, the needles 104 of Mehta would move between two terminal positions (one

corresponding to a fully retracted position of the needle assembly 102/needles 104, and the other corresponding to a fully extended position of the needle assembly 102/needles 104) by traversing a number of intermediate positions, each intermediate position separated by a single, incremental step.

227. A POSA would have understood that, in the microneedling apparatus of Mehta where the actuator 250 is provided in the form of a step-motor, a gear mechanism is necessarily present that converts the rotational movements of the step-motor into translational movements of the shaft 256—and therefore of the needles 104 (which are coupled to the shaft via the coupling portion 118 of the needle assembly 102)—in order for the needles 104 to extend and retract.

228. At the time of the invention, a POSA would have been familiar with step-motors and gear mechanisms capable of moving the needle assembly 102/needles 104 of Mehta's microneedling device in steps of approximately 100 μm. Specifically, a POSA would have known that providing the actuator 250 of Mehta's microneedling apparatus in the form of a step-motor would allow fixed angle rotations of the step-motor that cause fixed, approximately 100 μm translational movements of the shaft 256 (coupled via the coupling portion 118 of the needle assembly 102) and, therefore, of the needles 104.

229. Moreover, a POSA would have known how to provide control signals to a step-motor to cause the step-motor to assume a particular intermediate position

between two terminal positions. For example, a POSA would have known that a step-motor can be controlled by providing a train of input pulses (e.g. in the form of a square wave) to the step-motor, where each pulse of the pulse train is tailored (i.e. through selection of proper parameters, such as period and amplitude) to cause a single, fixed-angle rotation of the shaft of the step-motor. A POSA would also have known how to program a controller to track a current position of the step-motor (or alternatively, to track a current position of an associated gear mechanism) and to generate a pulse train having a number of pulses equal to a number of steps between that current position and a desired position (i.e. for the step motor or the associated gear mechanism). A POSA would therefore have known how to program a controller to cause the step-motor of Mehta to move the needles 104 to any specific intermediate step between a fully retracted position and a fully extended position.

230. As also discussed *supra* Section X.A.1(a), the motor of Mehta's microneedling device is driven by a control system/energy supply unit (*see*, *e.g.*, EX1004 at 10:38-39), and the control system/energy supply unit "may also include an input/output (I/O) device that allows the physician to input control and processing variables, to enable the controller to generate appropriate command signals" (EX1004 at 12:5-8). To the extent that Mehta does not disclose controlling the motor to provide for needle extension by a distance that is user-settable, it would have been obvious to a POSA to modify Mehta to provide such control, particularly in view of

Lee. Providing such control would streamline the treatment process, decrease the time required for treatment, and limit treatment cost and waste generated during treatment. In addition, providing such control would allow more precise targeting of treatment within the dermis, thereby providing improved treatment outcomes.

231. Proper needle depth may vary from one location on a patient's face to another. For example, when a user moves the microneedling device of Mehta from a patient's forehead to cheeks (the dermis is typically thinner on the forehead) or between different regions of a patient's check (the dermis is typically thinner on top of the cheek bones immediately beneath the eye sockets than it is above the facial cheek muscles), it may be necessary to adjust, or fine-tune, needle deployment depth. If only two positions—extended and retracted—were provided for the needles 104, it might be necessary to swap cartridges when treating different facial regions or when treating the face and the neck. By modifying Mehta to (i) allow a user to select a particular extension distance or insertion depth of the needles 104 (corresponding to a specific intermediate step of a step-motor) and/or (ii) allow an incremental increase or decrease, by one or more steps of a step-motor, of the extension distance and/or insertion depth of the needles 104, a user would be provided with flexibility necessary to rapidly adapt needle deployment and depth to different facial regions.

232. Mehta teaches that, by "detect[ing] the layer of skin in which the needles were deployed," "real-time information" can be provided "to the

physician…to confirm proper needle deployment and needle depth." EX1004 at 37:7-11. For example, Mehta discloses a "tissue characteristic indicator" that provides "a virtual depiction 350 of the depth or location" of the needles to "illustrate an actual placement" of the needles, which "allows the physician to…identify whether the array [of needles] is located within the desired tissue layer." EX1004 at 32:46-50, 32:52-59, 33:14-19. In the event the tissue characteristic indicator indicated an improper needle depth, incrementally increasing or decreasing needle deployment depth (e.g. by ~100µm steps of a step-motor) would allow a user, e.g. an aesthetician or dermatologist, to fine-tune needle extension to precisely and expeditiously achieve proper needle deployment and depth—in both different facial regions as well as on both the face and the neck—with a single cartridge. As a result, patients could be treated in less time, and clinicians and physicians could treat more patients per day. Furthermore, because it would not be necessary to use multiple cartridges when treating the same patient, fewer cartridges would be discarded (as compared to the case of swapping cartridges when treating different regions of the patient's skin) thereby resulting in less waste and lower costs.

233. Mehta also teaches that "precisely determin[ing] depth of placement" of the needles "allowed tunable dosimetry permitting controlled delivery of a specific thermal coagulation profile at a particular depth in the dermis" and "ensured adequate sparing of normal tissue." EX1004 at 39:33-41. Allowing a user to (i) select

a particular extension distance or insertion depth of the needles 104 (corresponding to a specific intermediate step of a step-motor) and/or (ii) incrementally increasing or decreasing, by one or more steps of a step-motor, an extension distance and/or insertion depth of the needles 104 would enable more precise control over needle depth (as compared to providing only retracted and extended positions combined with different cartridges with different needles lengths/sizes) would provide a user, e.g. an aesthetician or dermatologist, with both (i) an enhanced ability to precisely control needle depth and thereby the thermal coagulation profile and (ii) more flexibility in spacing fractional lesions (i.e. at different depths within the dermis) to ensure adequate sparing of normal tissue, thereby improving treatment outcomes.

234. Furthermore, allowing a clinician select a particular extension distance or insertion depth of the needles 104 (corresponding to a specific intermediate step of a step-motor) would facilitate compound treatments that target different layers of the skin—without necessarily requiring cartridges to be swapped. Mehta teaches that the skin treatment apparatus, "with its use of penetrating devices lends itself to the delivery of agents and materials directly to a specific region of tissue" (EX1004 at35:61-63), that "anesthetic agents such as lidocaine can be delivered through the probe" (EX1004 at 35:63-65), that "[c]ollagen or other filler material can be delivered prior to, during, or after energy delivery" (EX1004 at 35:66-36:4), and that "Botulinum Toxin type A (Botox®) can also be delivered to the dermis or to the

muscular layer below the dermis by further inserting the access probe" (EX1004, 9:22-25). Modifying Mehta to enable a clinician to variably select a needle extension distance would allow the clinician to move the needles from a first treatment depth (corresponding, e.g., to a thermal treatment designed to cause coagulation of collagen in the dermis of a patient's skin) to a second treatment depth (corresponding, e.g., to a depth for the delivery of Botox®, collagen, or an anesthetic agent). Such modifications of would shorten the duration of such compound treatments, thereby allowing patients to spend less time in a clinical setting, allowing clinicians to treat more patients in a given amount of time, and decreasing the cost of treatment.

235. A POSA would have been motivated to utilize Mehta's motor in this manner taught by Lee, as both Mehta and Lee recognize the benefits of being able to control needle insertion to a specific target depth and location. EX1004 at 12:41-13:4 (avoiding burns), 21:14–21 (uniformity; avoiding undesirable cosmetic outcomes and insufficient treatment), 33:30-31; EX1011 at <69> (minimizing pain; low cost; customized treatment; safety). Thus, to the extent that Mehta does not teach controlling the needle extension along the axis of extension, a POSA would have been motivated to improve upon Mehta by providing for this type of control taught by Lee (in addition to controlling the angle of insertion as taught by Mehta) so as to

achieve an even more precise and flexible manner of inserting needles to a desired target depth and location.

236. A POSA would also have been motivated to utilize Mehta's motor in the manner taught by Lee to achieve advantages which would be apparent to a POSA, such as, e.g. streamlining the treatment process, decreasing time required for treatment, limiting treatment cost and waste generated during treatment, and allowing more precise targeting of treatment within the dermis, thereby providing improved treatment outcomes. Thus, to the extent that Mehta does not teach controlling the needle extension along the axis of extension, a POSA would have been motivated to improve upon Mehta by providing for the type of control taught by Lee to achieve an even more precise and flexible manner of inserting needles to a desired target depth and location.

237. A POSA would have had a reasonable expectation of success in making the combination of Mehta and Lee. Utilizing Mehta's motor in the manner taught by Lee would have been straightforward and predictable to a POSA, and would merely involve operating of a known component (a stepper motor as disclosed in Mehta and as also disclosed in Lee) according to its established function (providing step-based actuation for needles along the axis of needle extension as expressly disclosed in Lee). The only modifications of Mehta that would be necessary to utilize Mehta's motor in the manner taught by Lee are: (i) providing an input element that allows for

a particular extension distance or insertion depth of the needles 104 to be set and/or for a command to incrementally increase or decrease an extension distance and/or insertion depth of the needles and (ii) augmenting the software and/or firmware of the control system/energy supply unit 90 to provide the functionality to convert the input to a control signal for the step-motor). Lee specifically teaches one possible scheme for programming a motor to advance needles to extend by a desired distance. *See* EX1011 at <50> ("motor 14 rotates to the extent of the pre-programmed setting in accordance with the mode selected" and "therefore, … the insertion depth of the microneedles can be controlled to fit in with the parameters"), <61> ("for the method of setting the mode such as the operational parameter of the motor, any method typically known in the convention art…may be adopted"), <33> ("[p]ressing the mode switch changes the mode" and "[t]he selected mode controls…the insertion depth of the needles."). Such modifications to operate the stepper motor as taught by Lee in this known way would have been a matter of routine engineering—i.e., controlling a motor, via routine programming, to extend needles a desired distance corresponding to a user selection, and would have been a matter of ordinary skill to a POSA, and not rise to the level of innovation.

238. For example, a POSA would have readily been able to perform routine programming to (i) provide a distance setting on Mehta's I/O interface (*see* EX1004 at 10:38-39, 12:5-14) for selecting a needle extension distance and (ii) configure

Mehta's control system/energy supply unit 90 (*see* EX1004 at 10:38-39) to convert the user-selected needle extension distance to a control signal (e.g. a pulse train for a step-motor). Mehta discloses an I/O interface "that allows the physician to input control and processing variables, to enable the controller to generate appropriate command signals," EX1004 at 12:5-8, and adding a parameter to the I/O interface and generating a corresponding command signal were well within the capabilities of a POSA. Further, Lee discloses that a motor may be controlled, through "pre-programm[ing]," to extend needles a desired distance corresponding to a user selection. *See* EX1011 at <50>.

2. Claims 1-7 and 9-18

239. With respect to independent claim 1, as discussed *supra* Sections X.A.1(a), X.A.1(b), and X.A.1(c), Mehta discloses elements [1pre], [1a], and [1b]. And with respect to independent claim 11, as discussed *supra* Sections X.A.11(a), X.A.11(b), and X.A.11(c), Mehta discloses elements [11pre], [11a], and [11b]. With respect to elements [1b] and [11b], as discussed in Section VIII.B., to the extent Serendia contends the term "a desired distance" should be construed so as to specifically require a distance, selected by a user, of needle extension along the axis of extension, such proposed interpretation is unduly narrow and should be rejected as contrary to the plain meaning of the term "desired distance." Nevertheless, even

if such interpretation were to be adopted, independent claims 1 and 11 would have been obvious over Mehta in view of Lee.

240. As discussed *supra* Section X.D.1., Lee teaches the use of a stepper motor for precise control of needle insertion depth along the axis of needle extension. EX1011 at <45>-<46>, <50>, <69>, FIGS. 4a-4b. It would have been obvious to a POSA to modify Mehta, based on the teachings of Lee, to enable a user to set, e.g. via a user interface, a depth of needle deployment along the axis of extension. Therefore, even if such a narrow interpretation of "a desired distance" (*see supra* Section VIII.B.) were to be adopted, claims 1 and 11 would have been obvious over Mehta in view of Lee.

241. With respect to dependent claims 2-7, 9-10, and 12-18, as discussed *supra* Sections X.A.2-X.A.9 and X.A.11.-X.A.17., Mehta discloses the additional elements recited by those claims. Furthermore, even if Serendia's unduly narrow interpretation for "desired distance" were to be adopted, it would have been, as discussed *supra* Section X.D.1., obvious to a POSA to modify Mehta, based on the teachings of Lee, to enable a user to set a depth of needle deployment along the axis of extension, and claims 2-7, 9-10, and 12-18 would have been obvious over Mehta in view of Lee.

E. Ground 5: Claims 8, 19, and 20 are Obvious over Mehta, Lee and Na '848

242. In my opinion, claims 8, 19, and 20 of the '774 patent are obvious over Mehta, Lee, and Na '848.

1. Motivation to Combine Mehta, Lee and Na '848

243. A POSA would have been motivated to combine Mehta with Lee for the reasons set forth *supra* Section X.D.1., and a POSA would have been motivated to add Na'848 to this combination of Mehta and Lee for the reasons set forth *supra* Section X.B.1. Mehta, Lee, and Na'848 are all directed to systems and methods of treating dermatological tissue, and a POSA would have been motivated to apply, to Mehta's microneedling apparatus and methods, (i) advantageous teachings of Lee regarding precise control of needle insertion depth, (ii) advantageous teachings of Na'848 regarding time interval and pulse width parameters. *See supra* Sections X.B.1 and X.D.1. The combination of these three references would have been a matter of routine engineering and would have yielded predictable results. *See id.*

2. Claims 8, 19, and 20

244. With respect to dependent claims 8, 19, and 20, as discussed *supra* Sections X.B.2–X.B.4, those claims are obvious over the combination of Mehta and Na '848. Furthermore, even if Serendia's unduly narrow interpretation for "desired distance" were to be adopted, it would have been, as discussed *supra* Section X.D.1., obvious to a POSA to modify the Mehta-Na '848 combination, based on the

teachings of Lee, to enable a user to set a depth of needle deployment along the axis of extension as described in Section X.D.1, and claims 8, 19, and 20 would have been obvious over Mehta, Lee, and Na '848.

XI. ACKNOWLEDGMENTS

245. In signing this declaration, I understand that the declaration will be filed as evidence in a contested case before the Patent Trial and Appeal Board of the United States Patent and Trademark Office. I acknowledge that I may be subject to cross-examination in the case and that cross-examination will take place within the United States. If cross-examination is required of me, I will appear for cross-examination within the United States during the time allotted for cross-examination.

246. I declare that all statements made herein of my knowledge are true and that all statements made on information and belief are believed to be true; and further, that these statements were made with knowledge that willful false statements and the like so made are punishable by fine or imprisonment, or both, under 18 U.S.C. § 1001.

I, DAMY BERUBE, declare under penalty of perjury under the laws of the United States of America that the foregoing is true and current.

Executed on JANUARY 9TH, 2024

APPENDIX A

DBERUBE55@HOTMAIL.COM (510) 823-5620
1032 PHOENIX CT, MILPITAS, CA 95035

DANY BÉRUBÉ, Ph.D.

Professional experience

August 2023 – Present **Lutronic Corporation** Milpitas, CA
Vice President of Advanced Research & Innovations
- Deliver Proof-of-Feasibility for early innovative concept.
- Provide Scientific inputs for during all product development phases.
- Responsible for all scientific aspects related to product development.
- Develop high-level strategies for product pipelines, and IP protection.

June 2021 – August 2023 **Sofwave Medical** Milpitas, CA
Vice President of Scientific Affairs & Innovations
- Identify and develop strategies/products aimed at addressing existing and new market opportunities to position the company as the market leader in the field.
- Develop and manage the patent portfolio.
- Deliver "Proof of Concepts" related to product enhancements, new technologies, and new procedures.
- Responsible to provide scientific competitive intelligence to the company in order to optimally define and position Sofwave offerings.
- Publish papers in peer-reviewed Journals.
- Present the science and key benefits of Sofwave technology to Key Opinion Leaders (KOLs) and salesforce during various meetings.

2020 – June 2021 **Self-Employed** Milpitas, CA
Consultant for Sofwave Medical and Healium Medical (Israel)
- Perform FEA analysis with Comsol to model tissue heating with an unfocused ultrasonic device for the treatment of wrinkles and skin laxity in the esthetic industry, and to model an ultrasonic catheter for the pulmonary veins isolation to treat atrial fibrillation in the electrophysiology industry.
- Extensive experience in thermal analysis, acoustic, RF, microwave, and laser modeling. Experienced using PDE and moving mesh modules with Comsol, as well as Ansys, Matlab, and Solidworks.

2008 – 2020 **Candela Medical (Primaeva Medical, Syneron Candela)** Milpitas, CA
Vice President R&D – Profound Division, and Vice President of Global Business Development and Strategy – R&D
Key Achievements
- Designed, presented, and implemented a patent portfolio strategy which led to $20M in upfront payments and 2-6% royalty streams from all RF needle-based competitive products in the US. The concept was presented to the Chairman of the Board in 2010, and the ITC lawsuit successfully completed in 2019.
- Developed new market opportunities for the treatment of cellulite and submental fat reduction. Proposed and develop new sterile single-used cartridges, which now represent about 30% of Profound recurring revenues. Led all clinical and data collection activities to obtain FDA 510k clearance for the treatment of cellulite. Trained physicians and on-staff nurses on the new clinical procedures and technology.
- Led the development of a new proprietary platform technology to compete with Cryolipolysis (CoolSculpt). Identified a missing key technological feature needed for success, and successfully

completed a proof of concept study with a major US university. Led the internal patent portfolio development to protect the concept.

- Wrote and published 5 peer-reviewed articles related to Profound technology, clinical results, and science in scientific Journals.
- Trained the direct US salesforce and international distributors on Profound technology, clinical procedures, science, as well as competitive positioning.
- Led the development of Profound (ePrime/Miratone) from inception to commercial release. Lead the R&D team in the design, V&V, 510k clearance, and commercial release of a system for the treatment of rhytids and skin laxity. Led the transfer to manufacturing from the US to Israel and China. The system is commercially available and called "Profound" (see: https://candelamedical.com/na/provider/product/profound). Manage all product and software updates since the commercial release.
- Develop and implement a strong IP portfolio related to Profound technology before the acquisition of Primaeva Medical by Syneron (now called Candela Medical).
- Filed 9 patents application in 5 months in 2009 as requested by the CEO.
- Act as a hands-on scientist and performed Finite Element Analysis (FEA) to model the radiofrequency and laser interactions with biological tissues in order to investigate and/or improve several treatment concepts.

Key Roles

- Identify and develop strategies aimed at addressing existing or new market opportunities to position the company as market leader, and create value for all stakeholders.
- Develop/maintain professional connections and alliances with major research laboratories in the industry to better address clinical needs. Act as a liaison between major research laboratories and the company.
- Develop both defensive and offensive IP strategies to optimize investment returns in key market segments occupied by the company.
- Develop a strong relationship with all Research and Clinical functions to ensure insightful inputs and strategies are generated for product and procedural development.
- Work directly with R&D to deliver "Proof of Concepts" related to product enhancements, new technologies, and new procedures.
- Work directly with Product Development, Engineering, Regulatory, and Marketing to guide product development, and optimize product launch.
- Act as a Technology Leader to guide Executive Leadership in potential asset acquisitions.
- Stay current with scientific and medical literature to ensure the latest innovations, knowledge and trends are applied in the company product and IP portfolio.
- Leading by example, create a culture where Innovation, Quality and Excellence are expected and rewarded.

2005 – 2008 **MicroCube, LLC** Fremont, CA

Program Manager

- Lead a full-fledged business project within the incubator. Responsible for all aspects of the project including clinical and market needs identification, staffing, R&D, IP, Quality, Regulatory, and Clinical. The project was to design a catheter-based procedure for the treatment of atrial fibrillation.
- Identify various market opportunities in medical fields for startup projects, and serve as a Board Director for the other active projects (3) within the incubator.
- Serve as a Quality Manager and implement a Quality System from the ground up. Lead all activities, and obtained ISO 13485 certification.

2004 - 2005 **Guidant** Santa Clara, CA

Consultant

- Along with 2 other executives from AFx, delivered $65 MM of Milestone Payments related to the acquisition of AFx by Guidant.

- Responsible to transfer AFx microwave ablation technology and "know-how" to Guidant.

1997 - 2004 **AFx inc.** Fremont, CA

Program Manager

- Lead the initial development of all the AFx surgical microwave ablation products released in the market. Three surgical devices were commercially released, and two catheter were under IDE.
- Developed products and procedures to perform first worldwide off-pump ablation of AF on beating heart, as well as first worldwide minimally invasive ablation procedure for AF.
- Brought the first worldwide minimally-invasive microwave ablation surgical product for the treatment of atrial fibrillation (FLEX 10) to a full market release.
- Developed and straightened AFx IP portfolio - named in 23 issued US patents, and 34 US pending applications.
- Lead all activities to publish technical and clinical results in Scientific Peer-Reviewed Journals.
- Provided technical support to physicians in the surgical operation room and electrophysiology laboratory.
- Worked closely with CEO and Board of Director to define acceptable terms during the acquisition of AFx by Guidant.
- Established strong relationships with key international Opinion Leaders to develop and promote AFx technology.
- Analyzed competitive technologies. Defined and lead company's response in term of technology and positioning to make sure that AFx was considered as the Leader in the field.
- Managed the Faculty of major International Conferences in Cardiac Surgery and Electrophysiology to insure optimal coverage of AFx technology.
- Maintained all responsibilities of a Program Manager position, including all R&D, Engineering, Operational, IP, Quality and Finance aspects. Reported directly to the CEO.

Areas of Expertise

R&D, Medical Device, Scientific Affairs, Patent Strategy, Company Liaison with External Research Centers, Product Development, Technology Evaluation, Product Portfolio Development, Scientific Publications, Team Management, Leadership Development, Quality System, Competitive Positioning, Electromagnetic Energy Interaction with Biological Tissues, Finite Element Analysis (FEA), Treatment of Arrhythmia, Atrial Fibrillation, Esthetic Procedures, Skin Treatment, Fat Removal Procedures, Cellulite Treatment, Faculty Management, Technical Writing, V&V, Product Commercialization, Biomedical Engineering, Microwave and RF Ablation, Regulatory Clearance.

List of Publications

Berube D (1998) - PhD Thesis - Traitement des arythmies cardiaques par ablation micro-onde. Ph.D, Ecole Polytechnique de Montreal.

Berube D, Ghannouchi FM, Savard P. A comparative study of four open-ended coaxial probe models for permittivity measurements of lossy dielectric/biological materials at microwave frequencies. IEEE Trans. Microwave Theory Tech. vol. 44, no. 10, pp. 1928-34, Oct. 1996. DOI: 10.1109/22.539951.

Williams MR, Knaut M, Bérubé D, Oz MC. Application of microwave energy in cardiac tissue ablation: from in vitro analyses to clinical use. Ann Thorac Surg. 2002 Nov;74(5):1500-5. doi: 10.1016/s0003-4975(02)03951-6. PMID: 12440599.

Keane D, Ruskin J, Norris N, Chapelon PA, Bérubé D. In vitro and in vivo evaluation of the thermal patterns and lesions of catheter ablation with a microwave monopole antenna. J Interv Card Electrophysiol. 2004 Apr;10(2):111-9. doi: 10.1023/B:JICE.0000019264.14661.8e. PMID: 15014211.

Gaynor SL, Byrd GD, Diodato MD, Ishii Y, Lee AM, Prasad SM, Gopal J, Berube D, Schuessler RB, Damiano RJ Jr. Dose response curves for microwave ablation in the cardioplegia-arrested porcine heart. Heart Surg Forum. 2005;8(5):E331-6. doi: 10.1532/HSF98.20051011. PMID: 16099735.

Alexiades-Armenakas M, Newman J, Willey A, Kilmer S, Goldberg D, Garden J, Berman D, Stridde B, Renton B, Berube D, Hantash BM. Prospective multicenter clinical trial of a minimally invasive temperature-controlled bipolar fractional radiofrequency system for rhytid and laxity treatment. Dermatol Surg. 2013 Feb;39(2):263-73. doi: 10.1111/dsu.12065. Epub 2012 Dec 28. PMID: 23278964.

Alexiades M, Munavalli G, Goldberg D, Berube D. Prospective Multicenter Clinical Trial of a Temperature-Controlled Subcutaneous Microneedle Fractional Bipolar Radiofrequency System for the Treatment of Cellulite. Dermatol Surg. 2018 Oct;44(10):1262-1271. doi: 10.1097/DSS.0000000000001593. PMID: 30222637.

Berube D, Renton B, Hantash BM. A predictive model of minimally invasive bipolar fractional radiofrequency skin treatment. Lasers Surg Med. 2009 Sep;41(7):473-8. doi: 10.1002/lsm.20794. PMID: 19708063.

Alexiades M, Berube D. Randomized, blinded, 3-arm clinical trial assessing optimal temperature and duration for treatment with minimally invasive fractional radiofrequency. Dermatol Surg. 2015 May;41(5):623-32. doi: 10.1097/DSS.0000000000000347. PMID: 25915628.

Willey A, Kilmer S, Newman J, Renton B, Hantash BM, Krishna S, McGill S, Bérubé D. Elastometry and clinical results after bipolar radiofrequency treatment of skin. Dermatol Surg. 2010 Jun;36(6):877-84. doi: 10.1111/j.1524-4725.2010.01563.x. Erratum in: Dermatol Surg. 2011 Dec;37(12):1821. Hantash, Basil [corrected to Hantash, Basil M]. PMID: 20618372.

Berube D, Amir R. Energy deposition and thermal profile of a novel non-invasive synchronous ultrasound parallel beam technology for skin treatment. ASLMS, Orlando, FL, Apr. 21-25 2021.

List of Patents and Patent Applications

EP 1 240 876 A1	Directional ablation catheter with myopotential sensing electrodes
EP 1 608 279 B1	A tissue ablation system with a sliding ablating device
EP 2 309940 A4	A positionable medical system for positioning medical components on or within a body
US 6,325,796B1	Microwave ablation instrument with insertion probe
US 6,471,696 B1	Microwave ablation instrument with a directional radiation pattern
US 6,527,768B2	End-firing microwave ablation instrument with horn reflection device
US 6,817,999 B2	Flexible device for ablation of biological tissue
US 6,893,436 B2	Ablation instrument having a flexible distal portion
US 7,099,717B2	Catheter having improved steering
US 7,156,841 B2	Electrode arrangement for use in a medical instrument
US 7,301,131 B2	Microwave ablation instrument with flexible antenna assembly and method
US 7,303,560 B2	Method of positioning a medical instrument
US 7,346,399 B2	Monopole tip for ablation catheter
US 7,387,627B2	Vacuum-assisted securing apparatus for a microwave ablation instrument
US 7,393,352B2	Electrode arrangement for use in a medical instrument
US 7,497.858 B2	Apparatus and method for assessing transmurality of a tissue ablation

US 7,736,360B2	Devices and methods for creating continuous lesions
US 8,657,815B2	Delivery system for delivering a medical device to a location within a patient's body
US 10,932,848 B2	Delivery system for delivering a medical device to a location within a patient's body
US 11,065,055 B2	Devices and methods for creating continuous lesions
US 2003/0083654A1	Tissue ablation system with a sliding ablating device and method
US 2004/0106937A1	Clamp accessory and method for an ablation instrument
US 2006/0116672A1	Microwave ablation instrument with insertion probe
US 2007/0203480 A1	Surgical microwave ablation assembly
US 2010/0262135 A1	Controlled delivery of therapeutic energy to tissue
AU2003209157A8	Ablation instrument having a flexible distal portion
AU2020245366A1	Device and method for treating tissue
AU2021211369A1	Skin tightening system
WO 2004073535A2	Apparatus and method for assessing tissue ablation transmurality
WO 2020171995A1	Monopolar RF subcutaneous fat treatment systems and methods
WO2021222372A1	Treatment apparatus
WO 2023089625A1	Vector tightening