CERTIFICATE OF TRANSLATION ACCURACY

I, Alex Jo, declare:

1. I am a professional translator specializing in translating Korean to English and vice versa.

2. I have over 25 years of experience translating thousands of technical, legal, and business documents from Korean to English submitted to, among others, various U.S. federal courts and the U.S. International Trade Commission (ITC).

3. I certify that the following translation of the corresponding source text is a true, correct, and complete translation to the best of my knowledge and ability.

Statements made herein are to the best of my knowledge true and are based on information that I believe to be true and further these statements were made with the knowledge that willful false statements and the like so made are punishable by fine or imprisonment, or both, under Section 1001 of Title 18 of the United States Code and that such willful false statements may jeopardize the validity of the patent application in the United States of America or any patent issuing thereto

Executed this 29th day of March 2021 in the Contra Costa County of the State of California.

By: _____
Alex N. Jo
Member, ATA

(19) Korean Intellectual Property Office (KR)
(12) Utility Model Registration Gazette (Y1)

(45) Publication date **August 25, 2008**
(11) Registration No. **20-0441552**
(24) Registration date **August 19, 2008**

(51) Int. Cl.
A61M 5/46 (01. 2006) ***A61M 37/00*** (01. 2006)
A61M 5/20 (01. 2006)
(21) Application No. **20-2007-0009242**
(22) Application date **June 5, 2007**
Examination request date **June 5, 2007**

(73) Patentee
Mcure Co., Ltd.
#208 Building 4, Medical Device Industrial Technology Complex, 1720-26, Taejang 2-dong Wonju-si, Gangwon-do, [Korea]
(72) Inventors
Man Gyu Lee
691-1404 Kotnae Maeul Halla Shinyoung Provence Block #38, Jukjeon Taekji Development Sector Jukjeon-dong, Yongin-si, Gyeonggi-do, [Korea]
Byeong Joon Kim
202-211 Baekwoon 2nd Apartment
Taejang 2-dong, Wonju-si, Gangwon-do, [Korea]
(74) Agent
Jeong Hyeon Kim

Total number of claims: 4 Examiner: Seong Sik Kim

(54) A MULTI-HOLE SKIN REGENERATION APPARATUS THAT CAN CONTROLL THE INSERTION DEPTHS OF THE MICRONEEDLES

(57) Abstract
The present invention relates to a skin regeneration apparatus used for performing multi-hole procedures to remove or treat stretch marks, calluses, wrinkles, hair loss, scars, etc.

The present invention provides a multi-hole skin regeneration apparatus capable of depth-controllable insertion of microneedles that can create hundreds to tens of thousands of holes on the human skin with a gun equipped with a plurality of microneedles, and, in particular, implementing a new treatment method that can properly control the insertion depth of the microneedles, thereby not only effectively performing multi-hole treatment, but, above all, also attaining stability and precision of needle depth, and performing proper treatment customized for each patient.

Representative Drawing - FIG **2**

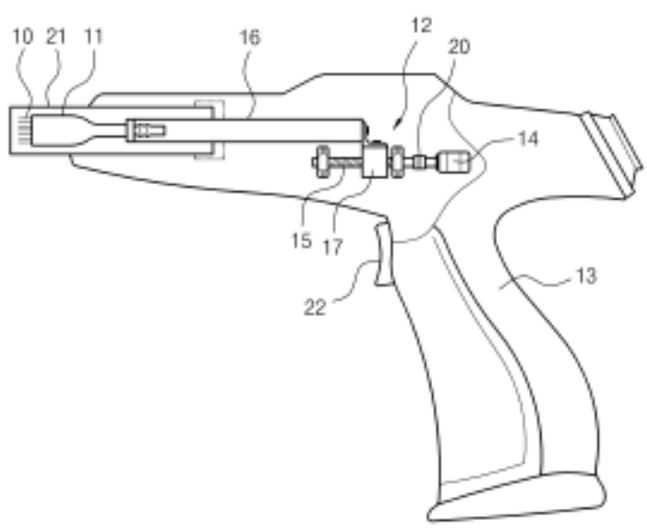

Jeisys Ex. 1011 Page 2 of 10

What is claimed is:

Claim 1

A multi-hole skin regeneration apparatus that can control the insertion depth of microneedles comprising: a needle mount equipped with a plurality of microneedles; an actuator that repeatedly moves the needle mount back and forth; a gun for controlling the operation of said actuator; and a cart, wherein

said actuator comprises: (i) a motor driven by the operation of the gun switch, capable of controlling the number of revolutions; and (ii) an electric motor device that delivers the motorized power to the needle mount, wherein said electric motor device comprises: a screw electric axis capable of rotating with its one end connected to the motor; and a rod which is coupled with said screw electric motor axis in a structure that can electrically motorize screw and, at the same time, includes a slider that can move back and forth, thereby adjusting the insertion depth of the microneedles by adjusting the stroke of said slider by controlling the amount of rotation of the motor.

Claim 2

The multi-hole skin regeneration apparatus that can control the insertion depth of the microneedles, according to claim 1, wherein said position-controllable motor is one of a linear motor, a stepping motor, a CD servo motor, and an AC servo motor.

Claim 3

The multi-hole skin regeneration apparatus that can control the insertion depth of the microneedles, according to claim 1, wherein said electric motor device has one end of said screw electric motor axis directly connected to the motor axis.

Claim 4

The multi-hole skin regeneration apparatus that can control the insertion depth of the microneedles, according to claim 1, wherein said electric motor device comprises a driving gear mounted to the motor axis and a driven gear that is electrically motorized in engagement with this driving gear; however, one end of said screw electric motor axis is connected to said driven gear capable of rotating.

Specification

Detailed Description of the Invention

Objects of the Invention

Technical Field of the Invention and the Conventional Art

<13> The present invention relates to a skin regeneration apparatus capable of controlling the insertion depth of microneedles and, more particularly, to a skin regeneration apparatus capable of controlling microneedles that can provide effective multi-hole treatment as well as safety and precision as to the depth of microneedles by making it possible to automatically control the insertion depth of the microneedles during multi-hole treatment.

<14> Generally, multi-hole treatment is a method used mostly for skin care and healthy hair such as wrinkle treatment, acne removal, callus removal, etc. There are methods in which holes are created on the skin where drugs or cosmetics are applied to permeate the skin extremely fast in a large amount, thereby maximizing the effect of medication; and a method in which needles stimulate the skin, thereby inducing collagen production from the reaction of the human body. The main areas of treatment are the face and scalp.

<15> In this method, for example, hundreds to tens of thousands of tiny holes are created on the human skin to regenerate tissues by using its self-healing ability to heal the skin that is damaged in the process of making the tiny holes; and treatment medication is applied on the area where tiny holes are created, allowing the drugs to quickly permeate the skin through the tiny holes, thereby maximizing the efficacy of treatment.

<16> Unlike the existing treatment methods (lasers, dermabrasion, etc.) in which the skin is peeled off to treat wrinkles or hyperpigmentation by regenerating the damaged skin, this multi-hole treatment method is a conceptually new cell restoration method that induces endogenous production of collagen without removing or damaging the epidermis of the skin.

<17> The multi-hole treatment method, which is simple and safe as well as free of side effects, newly reconstructs and rearranges dermal tissues by using a process of natural wound healing that occurs when a plurality of needles are inserted into the skin, thereby making scars thinner as well as tightening the skin. As a result, fine wrinkles decrease and hyperpigmentation improves, restoring healthy and clean skin.

<18> In addition, hundreds of needles provide a huge number of paths, hundreds to tens of thousands of holes within a few minutes, to further maximize the efficacy of treatment by delivering effective substances such as active peptide and the like.

<19> To create multi-holes on the human skin, there is a method of using multi-roller needles and there is a method of using lasers. Of recent, another method has been put forth in the specification of a patent application (Application No.: 10-2007-2609) filed by this applicant; this method can effectively create hundreds to tens of thousands of tiny holes on the human skin using a gun with microneedles mounted thereto.

<20> The aforementioned multi-hole treatment using a gun is a method of creating holes on the skin by using the repetitive reciprocating operation of the actuator with manipulation of a gun switch. The treatment is performed by adjusting the insertion depth of needles depending on the patient or the area of treatment. This method entails disadvantages in terms of stability and precision of treatment, including, among others: (i) It is not only inconvenient but also prolongs the procedure time since it requires multiple guide caps with different lengths to adjust the insertion depth of the needles in such a way that the guide cap has to be replaced at each treatment; (ii) only a few guide caps with fixed lengths are used, limiting the range of various adjustments; and (iii) in particular, it is difficult to adjust the depth for optimal insertion appropriate for the patient or the area of treatment.

Technical Problems to be Solved by the Present Invention

<21> Accordingly, these points were factored into the creation of the present invention. It is the object of the present invention to provide a multi-hole skin regeneration apparatus including a plurality of needles for multi-hole treatment for stretch marks, calluses, wrinkles, hair loss, scars, etc., capable of controlling insertion depth of the microneedles, where the multi-hole skin regeneration apparatus is capable of: (i) creating hundreds to tens of thousands of holes on the human skin with a gun equipped with a plurality of microneedles; (ii) in particular, effectively performing multi-hole treatment by implementing a new treatment method that can properly control the insertion depth of the microneedles; (iii) above all, attaining safety and precision as to the depth of needles; and (iv) performing proper treatment customized for each patient.

<22> The objects of the present invention are not limited to the objects described above. For other objects not described herein, those skilled in the art would be able to clearly understand from what is described below.

Construction and Operation of the Invention

<23> The multi-hole skin regeneration apparatus to achieve said objects according to an embodiment of the present invention comprises: a needle mount equipped with a plurality of microneedles; an actuator comprising a position-controllable motor and an electric motor device that move the needle mount back and forth repeatedly; a gun for controlling the operation of the actuator; and a cart.

<24> Here, the motor of a multi-hole skin regeneration apparatus according to an embodiment of the present invention may be a linear motor, a stepping motor, a DC servo motor, an AC servo motor, etc.

<25> In addition, an example of an electric motor device in a multi-hole skin regeneration apparatus, according to an embodiment of the present invention, may comprise a form combining, among others: a rotatable screw electric motor axis directly connected to the motor axis; and a slider movable back and forth and connected to said screw electric motor axis in a structure that enables electric screw motor and, at the same time, coupled with a rod including a needle mount.

<26> On another note, another example of an electric motor device in a multi-hole skin regeneration apparatus, according to an embodiment of the present invention, may comprise a form combining, among others: a driving gear mounted to the axis of the motor and a driven gear that is electrically motorized in engagement therewith; a rotatable screw electric motor axis having said driven gear on one end; and a slider movable back and forth connected to said screw electric motor axis in a structure that enables electric screw motor and, at the same time, coupled with a rod including a needle mount.

<27> Specifics of embodiments are otherwise included in the detailed description of the present invention and the drawings.

<28> The advantages and the features of the present invention, and the method to achieve those would be clear by referring to the accompanying drawings and the embodiments to be described below.

<29> However, the present invention is not limited to the disclosed embodiments but can be implemented in various forms, different from each other. These embodiments above are provided merely to complete the laid-open disclosure of the present invention and to fully inform those skilled in the art of the scope of the present invention. As such, the present invention is defined solely by what is claimed in the claims of the present invention. Throughout the entire specification, the same reference numerals indicate the same constituent elements.

<30> The aforementioned skin regeneration apparatus basically adopts a multi-hole treatment method in which the skin is stimulated with needles to induce collagen production from the reaction of the human body. It includes, in large part, a cart as a means of control and a gun as a means of substantive treatment. After a needle assembly

equipped with a plurality of microneedles is mounted to the gun, a force is applied to this needle assembly in the direction of a straight line, thereby allowing the plurality of microneedles to be inserted into the human skin all at the same time. The present invention works with a mechanism that enables hundreds to tens of thousands of holes created on the human skin, as the needle assembly repeats this linear motion.

<31> For this, as a part that supplies power and controls gun operation speed and mode, the cart (not illustrated) for controlling the gun is internally equipped with, among others: an embedded power supply means in the form of switching mode power supply (SMPS); a control logic (program) for controlling LCD, solenoid valve, etc.; and a main board including the control logic for converting the mode of the gun. And externally, the cart is equipped with, among others: various types of switches as means of manipulation and display; a display window for displaying the operational relationship, etc.; and lamps for informing power On/Off.

<32> Accordingly, such cart not only supplies power to the gun but also, among others, displays the state of speed control and treatment progress associated with the gun operation.

<33> For example, it receives AC power supply from outside to operate SMPS and controls LCD and the insertion speed as well as the insertion depth of needles. In other words, it controls display on the LCD of a cart. Pressing the mode switch changes the mode. The selected mode controls the speed of reciprocating insertions (number of repetitive insertions) and the insertion depth of the needles.

<34> Here, in connection with the main board control operation of the cart, any method of controlling the reciprocating speed of needle insertion in accordance with the mode selected may be adopted without any particular limitation insofar as the method is typically known in the conventional art of the technical field of the present invention. We will now explain the mechanical structure for controlling the insertion depth of the needles.

<35> As illustrated in FIG. **1**, said gun **13** is the part to insert a needle mount **11** with a plurality of microneedles **10** mounted thereto directly into the human skin; formed in the form of a gun; has the trigger-shaped ON/OFF switch **22** at the handle; and its gunpoint is made to allow insertion of the needle mount **11**.

<36> In other words, after the needle mount **11** is snapped into the gunpoint of the gun **13** to fasten, when the switch **22** is pressed, the needle mount **11** moves forward; as such, it is built to create holes on the human skin with the microneedles **10** equipped in the needle mount **11**.

<37> The gun **13** comprises, among others: a connector (not illustrated) for electric connection with the cart; an actuator **12** for practical operation of the needle mount **11**. Said switch **22** and actuator **12** are electrically connected to each other.

<38> In addition, as a part where a plurality of microneedles **10** are mounted, said needle mount **11** is formed, in general, in a cylindrical shape. Its front side has a large diameter to secure a footprint of predetermined size to mount the microneedles **10** and, at the same time, its back side has a small diameter to allow it to be coupled with the rod **16** for connecting it with the actuator **12**.

<39> The flat front part of the tip of the needle mount **11** is mounted with a plurality of microneedles **10** in an all-in-one type. The back part is a depressed ingress connecting member formed along the perimeter around the diameter, making it connectable in the form of being attachable/detachable to/from the rod connected to the actuator **12** of the gun **13**.

<40> For example, after connecting an adapter (not illustrated) to the rod **16** on the actuator **12**, the connecting part in the back end of the needle mount **11** on the adapter side can be fastened in the form of a quick connector to snap it in, i.e., a form of hooking structure with alternating depression/protrusion. As a result, the needle mount is easily replaceable by manipulating it to apply slight pressure to snap it in or pull it back.

<41> Here, the front part of the needle mount **11** may come in various shapes such as a disc with the size of a 3mm-2cm diameter or a star shape in the similar size, rectangle, etc. A microneedle may be configured in various ways with a diameter of 0.2mm-0.7mm depending on the use for treatment with a length of about 5mm. Approximately nine (9) microneedles may be mounted for use.

<42> In addition, a guide cap **21** is installed at the gunpoint of the gun **13** making it possible to guide the operation of the needle mount **11**.

<43> Shaped in a cylindrical transparent pipe, the guide cap **21**, as a part that comes into contact with the human skin, is in the form of being attachable/detachable to/from the gunpoint of the gun **13**; In other words, it is mounted in the form of a hooking structure with alternating depression/protrusion, which is similar to the coupling of the needle mount as described above.

<44> In particular, the present invention provides an actuator means that can control the insertion depth of the microneedles. By being capable of controlling the degree of microneedle insertion, it provides precise treatment as well as stability during treatment and, above all, brings about an advantage of performing precise treatment customized depending upon the area of treatment as well as the patient.

<45> For this, as an example of an actuator, as illustrated in FIG. **2**, a screw electric motor axis **15** is installed inside the gun **13** with a structure in which both ends are supported by interposed bearings and the like to make it rotatable. One end of the screw electric motor axis **15** installed this way is connected to the motor **14** through a coupling **20**, allowing the screw electric motor axis to rotate along with the operation of the motor.

<46> The motor **14** here is a position-controllable motor. As such, a linear motor, a stepping motor, a DC servo motor, and an AC servo motor may be used.

<47> In addition, a slider **17**, which is coupled with said screw electric motor axis that can electrically motorize the screw, is installed on the screw electric motor axis **15**; and a rod **16** with a needle mount **11** coupled therewith is connected to this slider **17** with a bracket or the like, thereby allowing the entire rod including the needle mount to move back and forth along with the operation of the slider.

<48> Of course, the slider here may be supported, in a properly slidable manner, by the publicly known guide structure (not illustrated), formed inside to prevent rotation.

<49> Accordingly, when the screw electric motor axis **15** rotates by the forward rotation of the motor **14**, the slide **17** moves forward by electrically motorizing the screw and, at the same time, the needle mount **11** having microneedles **10** and the rod **16** move forward in the entirety, allowing the microneedles to be inserted into the skin.

<50> Here, said motor **14** rotates to the extent of the pre-programmed setting in accordance with the mode selected; therefore, the strokes of the slider **17**, the rod **16** and the needle mount **11** can be controlled and, ultimately, the insertion depth of the microneedles can be controlled to fit in with the parameters at this time.

<51> And, by the reverse rotation of the motor **14**, as the operating elements that have moved forward come back, microneedles are pulled out of the skin.

<52> On another note, FIG. **3** illustrates another example of the actuator **12**, e.g., an example of power being delivered by the motor **14** equipped with a motorized means of gear combination in place.

<53> For this, a driving gear **18** is mounted to the axis of the motor **14**; a driven gear **19** is mounted to the other end of the screw electric motor axis **15**. Here, the driving gear **18** and the driven gear **19** are combined in a structure that allows the two meshed gears to rotate together; accordingly, the power of the motor **14** is conveyed to the screw electric motor axis **15**. Subsequent relationship of electric motorization comes together in the same manner as described in the example above.

<54> Hereunder, we will look into a treatment method that uses the multi-hole skin regeneration apparatus of the present invention.

<55> FIG. **4a** and FIG. **4b** are the schematic diagrams illustrating the state of use of the multi-hole skin regeneration apparatus according to an embodiment of the present invention.

<56> As illustrated in FIG. **4a** and FIG. **4b**, said multi-hole treatment basically adopts a method in which a needle mount equipped with a plurality of microneedles are mounted to a gun capable of repeating linear operation and the gun is operated in such a way as to vertically insert the microneedles of the needle mount into the skin.

<57> Such a treatment method allows repetitive insertion of needles at a constant speed and at a constant depth.

<58> For example, the treatment procedure may be performed at a speed of about 66-420 times per minute and the depth of the needles about 1 mm to 4 mm.

<59> For starters, as a preparatory step, power supply is connected first; after that, the cart and the gun are connected to each other; the power supply switch is turned on; and the mode switch is manipulated to set the mode in line with each patient's traits.

<60> In other words, the operational parameter (amount of rotation) of the motor is set to determine the insertion depth of the needles.

<61> Here, for the method of setting the mode such as the operational parameter of the motor, any method typically known in the conventional art of the technical field of this invention may be adopted without any particular limitation.

<62> After the preparation step is completed as described above, the end of the guide cap **21** mounted to the gunpoint of the gun **13** is placed on the skin area to be treated, the switch **22** is pressed to drive the motor **14**. As a result, by the operation of the screw electric motor axis **15** and the slider **17**, the microneedles on the frontal needle mount **11** create holes as they are inserted into the skin.

<63> As described above, the process of reciprocating operation of the microneedles is repeated multiple times by repetitively driving the motor back and forth, allowing creation of hundreds to tens of thousands of holes on the human skin.

<64> Here, the repetitive operation of the actuator is controlled by the main board of the cart; and it is possible to enable the repetitive operation of the actuator in connection with the manipulation of a switch.

<65> For example, the actuator may be set in such a manner that it performs one reciprocating operation each time the switch is pressed; or actuator performs multiple reciprocating operations while holding the switch pressed.

<66> Here, as for the method of setting the operation of the actuator in connection with the manipulation of the switch by way of controlling the main board, it goes without saying that any of the typically known various methods of the conventional art may be naturally applied.

<67> As described herein, the multi-hole treatment method of the present invention provides various advantages: repetitive needle insertion can be performed at a constant speed and at a constant depth; the size and weight of the gun are small and light, minimizing the otherwise burdensome use of the hand during treatment; it is easy to adjust the needle insertion depths by controlling the microneedles; and various modes are available to use by adopting a microprocessor chipset.

<68> Embodiments of the present invention are described above with reference to the accompanying drawings. However, those skilled in the art would be able to understand that the present invention can be reduced to practice in other specific forms without departing from the technical idea or essential features thereof. Therefore, it must be understood that the embodiments described above are merely exemplary in all respects and not restrictive.

Effect of the Present Invention

<69> As described above, the present invention enhances the multi-hole treatment effects by making it possible, among others, to perform treatment with a method of automatically adjusting the insertion depth of the microneedles during multi-hole treatment, thereby minimizing pain during treatment, and to perform procedure easily at low cost; not only that, it also provides, above all, customized treatment for each patient by making it possible, among others, to adjust the microneedle insertion depth variously, simply, and conveniently, thereby providing safety and precision as to the depth of the needles.

Brief Description of the Drawings

<1> FIG. **1** is a perspective view of the gun in the multi-hole skin regeneration apparatus according to an embodiment of the present invention.

<2> FIG. **2** is a schematic diagram of one example of the actuator in the multi-hole skin regeneration apparatus according to an embodiment of the present invention.

<3> FIG. **3** is a schematic diagram of another example of the actuator in the multi-hole skin regeneration apparatus according to an embodiment of the present invention.

<4> FIGS. **4a** and **4b** are the schematic diagrams illustrating the state of use of the multi-hole skin regeneration apparatus according to an embodiment of the present invention.

<5> <Description of reference numerals>

<6>	10:	Microneedles	11:	Needle mount
<7>	12:	Actuator	13:	Gun
<8>	14:	Motor	15:	Screw electric motor axis
<9>	16:	Rod	17:	Slider
<10>	18:	Driving gear	19:	Driven gear
<11>	20:	Coupling	21:	Guide cap
<12>	22:	Switch		

Drawings

FIG. 1

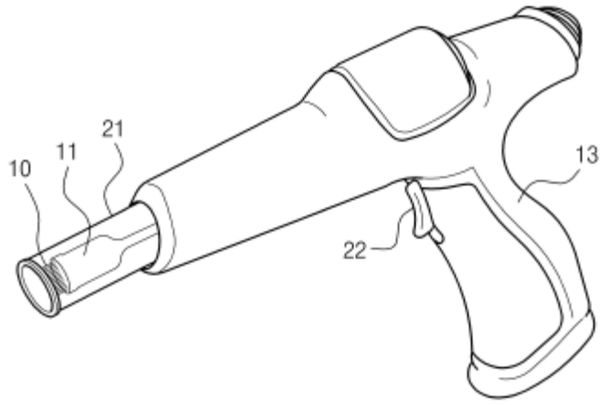

FIG. 2

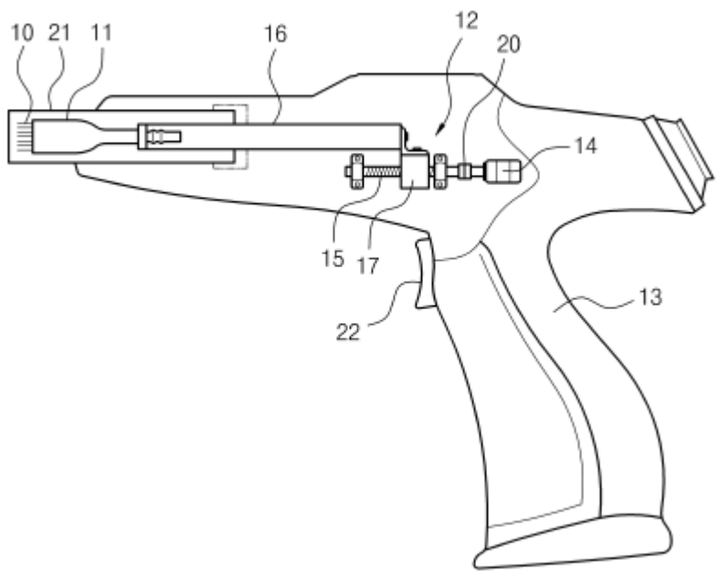

FIG. 3

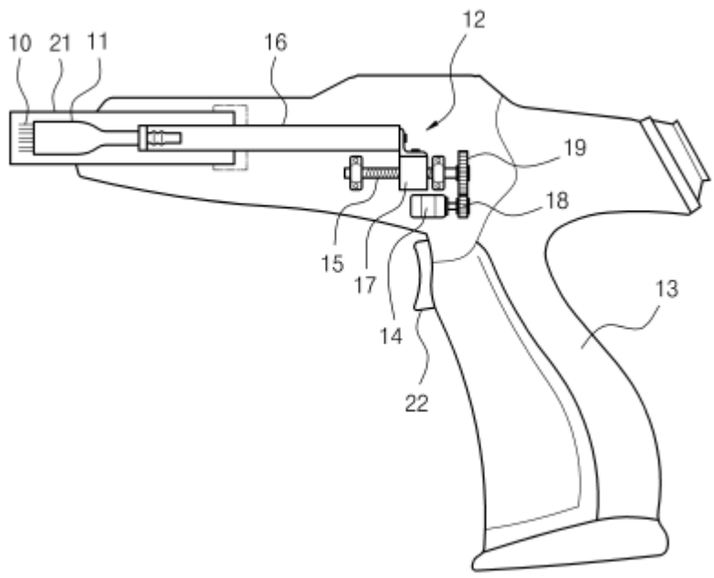

FIG. 4a

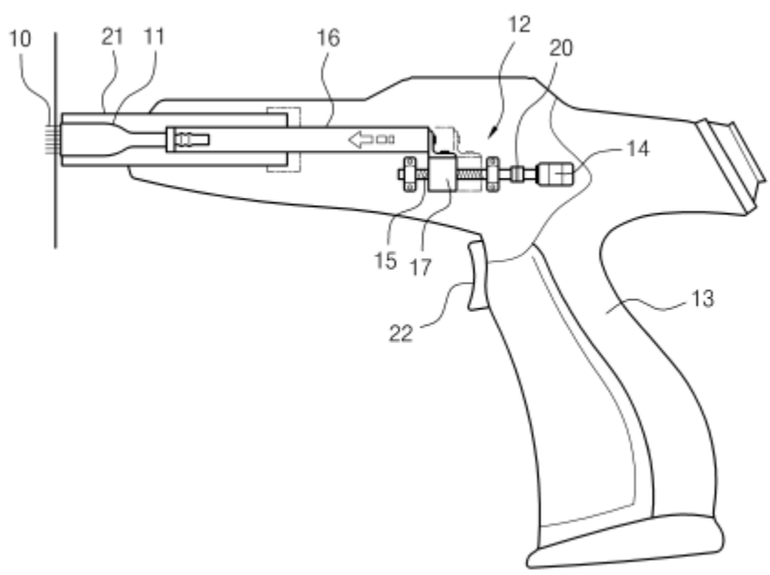
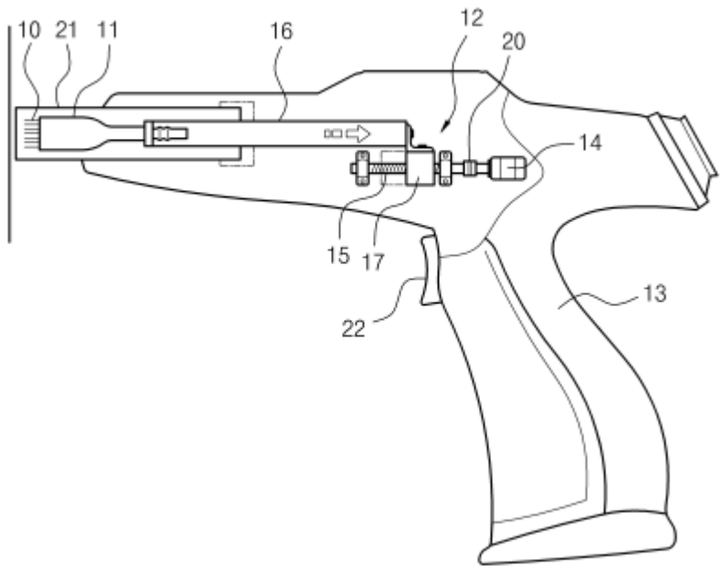
FIG. 4b