8315355

THE UNITED STATES OF AMERICA

TO ALL TO WHOM THESE PRESENTS SHALL COME:

UNITED STATES DEPARTMENT OF COMMERCE

United States Patent and Trademark Office

November 14, 2022

THIS IS TO CERTIFY THAT ANNEXED IS A TRUE COPY FROM THE RECORDS OF THIS OFFICE OF THE FILE WRAPPER AND CONTENTS OF:

APPLICATION NUMBER: ***13/825,083***
FILING DATE: ***January 20, 2014***
PATENT NUMBER: ***9320536***
ISSUE DATE: ***April 26, 2016***

Certified by

Kathi

Performing the Functions and Duties of the
Under Secretary of Commerce
for Intellectual Property
and Director of the United States
Patent and Trademark Office

Serendia, LLC
Exhibit 2114
Jeisys v. Serendia
IPR2024-00383
Ex. 2114-001

PTO/AIA/01 (06-12)
Approved for use through 01/31/2014. OMB 0651-0032
U.S. Patent and Trademark Office; U.S. DEPARTMENT OF COMMERCE
Under the Paperwork Reduction Act of 1995, no persons are required to respond to a collection of information unless it displays a valid OMB control number.

DECLARATION (37 CFR 1.63) FOR UTILITY OR DESIGN APPLICATIONS USING AN APPLICATION DATA SHEET (37 CFR 1.76)

Title of Invention	METHOD, SYSTEM, AND APPARATUS FOR DERMALOGICAL TREATMENT

As the below named inventor, I hereby declare that:

This declaration is directed to:

[ ] The attached application, or

[X] United States application or PCT international application number PCT/KR2012/001335 filed on February 22, 2012.

The above-identified application was made or authorized to be made by me.

I believe that I am the original inventor or an original joint inventor of a claimed invention in the application.

I hereby acknowledge that any willful false statement made in this declaration is punishable under 18 U.S.C. 1001 by fine or imprisonment of not more than five (5) years, or both.

WARNING:

Petitioner/applicant is cautioned to avoid submitting personal information in documents filed in a patent application that may contribute to identity theft. Personal information such as social security numbers, bank account numbers, or credit card numbers (other than a check or credit card authorization form PTO-2038 submitted for payment purposes) is never required by the USPTO to support a petition or an application. If this type of personal information is included in documents submitted to the USPTO, petitioners/applicants should consider redacting such personal information from the documents before submitting them to the USPTO. Petitioner/applicant is advised that the record of a patent application is available to the public after publication of the application (unless a non-publication request in compliance with 37 CFR 1.213(a) is made in the application) or issuance of a patent. Furthermore, the record from an abandoned application may also be available to the public if the application is referenced in a published applications or an issued patent (see 37 CFR 1.14). Checks and credit card authorization forms PTO-2038 submitted for payment purposes are not retained in the application file and therefore are not publicly available.

LEGAL NAME OF INVENTOR

Inventor: Jongju Na Date (Optional): _____

Signature: _____

Note: An application data sheet (PTO/SB/14 or equivalent), including naming the entire inventive entity, must accompany this form. Use an additional PTO/AIA/01 form for each additional inventor.

This collection of information is required by 35 U.S.C. 115 and 37 CFR 1.63. The information is required to obtain or retain a benefit by the public which is to file (and by the USPTO to process) an application. Confidentiality is governed by 35 U.S.C. 122 and 37 CFR1.11 and 1.14. This collection is estimated to take 1 minute to complete, including gathering, preparing, and submitting the completed application form to the USPTO. Time will vary depending upon the individual case. Any comment on the amount of time you required to complete this form and/or suggestions for reducing this burden, should be sent to the Chief Information Officer, U.S. Patent and Trademark Office, U.S. Department of Commerce, P.O. Box 1450, Alexandria, VA 22313-1450. DO NOT SEND FEES OR COMPLETED FORMS TO THIS ADDRESS. **SEND TO: Commissioner for Patents, P.O. Box 1450, Alexandria, VA 22313-1450.**

If you need assistance in completing the form, call 1-800-PTO-9199 and select option 2.

PTO-1390 (Rev. 12-12)
Approved for use through 4/30/2013. OMB 0651-0021
U.S. Patent and Trademark Office; U.S. DEPARTMENT OF COMMERCE
Under the Paperwork Reduction Act of 1995, no persons are required to respond to a collection of information unless it displays a valid OMB control number.

TRANSMITTAL LETTER TO THE UNITED STATES DESIGNATED/ELECTED OFFICE (DO/EO/US) CONCERNING A SUBMISSION UNDER 35 U.S.C. 371

Attorney Docket No.
NA001KR_PCTUS

U.S. Application No. (If known, see 37 CFR 1.5)

International Application No.	International Filing Date	Priority Date Claimed
PCT/KR2012/001335	3/3/2011	8/22/2008

Title of Invention
METHOD, SYSTEM, AND APPARATUS FOR DERMALOGICAL TREATMENT

First Named Inventor
Na, Jongju Na

Applicant herewith submits to the United States Designated/Elected Office (DO/EO/US) the following items and other information:

1. [X] This is an express request to begin national examination procedures (35 U.S.C. 371(f)). NOTE: The express request under 35 U.S.C. 371(f) will not be effective unless the requirements under 35 U.S.C. 371(c)(1), (2), and (4) for payment of the basic national fee, copy of the International Application and English translation thereof (if required), and the oath or declaration of the inventor(s) have been received.
2. [ ] A copy of the International Application (35 U.S.C. 371(c)(2)) is attached hereto (not required if the International Application was previously communicated by the International Bureau of was filed in the United States Receiving Office (RO/US)).
3. An English language translation of the International Application (35 U.S.C. 371(c)(2))
   a. [X] is attached hereto.
   b. [ ] has been previously submitted under 35 U.S.C. 154(d)(4).
4. An oath or declaration of the inventor(s) (35 U.S.C. 371(c)(4))
   a. [X] is attached.
   a. [ ] was previously filed in the international phase under PCT Rule 4.17(iv).

Items 5 to 8 below concern amendments made in the international phase.

PCT Article 19 and 34 amendments

5. [ ] Amendments to the claims under PCT Article 19 are attached (not required if communicated by the International Bureau) (35 U.S.C. 371(c)(3)).
6. [ ] English translation of the PCT Article 19 amendment is attached (35 U.S.C. 371(c)(3)).
7. [ ] English translation of annexes (Article 19 and/or 34 amendments only) of the International Preliminary Examination Report is attached (35 U.S.C. 371(c)(5)).

Cancellation of amendments made in the international phase

8a. [ ] Do not enter the amendment made in the international phase under PCT Article 19.

8b. [ ] Do not enter the amendment made in the international phase under PCT Article 34.

NOTE: A proper amendment made in English under Article 19 or 34 will be entered in the U.S. national phase application absent a clear instruction from applicant not to enter the amendment(s).

The following items 9 to 17 concern a document(s) or information included.

9. [ ] An Information Disclosure Statement under 37 CFR 1.97 and 1.98.
10. [X] A preliminary amendment.
11. [X] An application Data Sheet under 37 CFR 1.76.
12. [ ] A substitute specification. NOTE: A substitute specification cannot include claims. See 37 CFR 1.125(b).
13. [ ] A power of attorney and/or change of address letter.
14. [ ] A computer-readable form of the sequence listing in accordance with PCT Rule 13*ter*.3 and 37 CFR 1.821-1.825.
15. [ ] Assignment papers *(cover sheet and document(s))*. Name of Assignee: _____
16. [ ] 37 CFR 3.73 Statement *(when there is an Assignee)*.

This collection of information is required by 37 CFR 1.414 and 1.491–1.492. The information is required to obtain or retain a benefit by the public, which is to file (and by the USPTO to process) an application. Confidentiality is governed by 35 U.S.C. 122 and 37 CFR 1.11 and 1.14. This collection is estimated to take 15 minutes to complete, including gathering, preparing, and submitting the completed application form to the USPTO. Time will vary depending upon the individual case. Any comments on the amount of time you require to complete this form and/or suggestions for reducing this burden should be sent to the Chief Information Officer, U.S. Patent and Trademark Office, U.S. Department of Commerce, P.O. Box 1450, Alexandria, VA 22313-1450. DO NOT SEND FEES OR COMPLETED FORMS TO THIS ADDRESS. SEND TO: Mail Stop PCT, Commissioner for Patents, P.O. Box 1450, Alexandria, VA 22313-1450.

Under the Paperwork Reduction Act of 1995, no persons are required to respond to a collection of information unless it displays a valid OMB control number.

U.S. APPLN. No. (if known - see 37 CFR 1.5)	INTERNATIONAL APPLICATION No. PCT/KR2012/001335	ATTORNEY DOCKET No. NA001KR_PCTUS

17. [ ] Other items or information:

The following fees have been submitted.	CALCULATIONS	PTO USE ONLY
18. [X] Basic national fee (37 CRF 1.492(a)) **$390**	$ 390	
19. [X] Examination fee (37 CFR 1.492(c)) If the written opinion prepared by ISA/US or the international preliminary examination report prepared by IPEA/US indicates all claims satisfy provisions of PCT Article 33(1)-(4) . . . . . **$0** All other situations **$250**	$ 250	
20. [X] Search fee (37 CFR 1.492(b)) If the written opinion prepared by ISA/US or the international preliminary examination report prepared by IPEA/US indicates all claims satisfy provisions of PCT Article 33(1)-(4) . . . . . **$0** Search fee (37 CFR 1.445(a)(2)) has been paid on the international application to the USPTO as an International Searching Authority . . . . . **$120** International Search Report prepared by an ISA other than the US and provided to the Office or previously communicated to the US by the IB . . . . . **$500** All other situations **$630**	$ 500	
TOTAL OF 18, 19, and 20 =	$1,140	

[ ] Additional fee for specification and drawing filed in paper over 100 sheets (excluding sequence listing in compliance with 37 CFR 1.821(c) or (e) in an electronic medium or computer program listing in an electronic medium) (37 CFR 1.492(j)).
Fee for each additional 50 sheets of paper or fraction thereof **$320**

Total Sheets	Extra Sheets	Number of each addition 50 or fraction thereof (round **up** to a whole number)	RATE
45 - 100 =	0 / 50 =	0	x **$320**

$ 0

Surcharge of **$130.00** for furnishing any of the search fee, examination fee, or the oath or declaration after the date of commencement of the national stage (37 CFR 1.492(h)).	$ 0

CLAIMS	NUMBER FILED	NUMBER EXTRA	RATE		
Total claims	20 - 20 =	0	x **$62**	$ 0	
Independent claims	2 - 3 =	0	x **$250**	$ 0	
MULTIPLE DEPENDENT CLAIM(S) (if applicable)			+ **$460**	$ 0	
			TOTAL OF ABOVE CALCULATIONS =	$1,140	
[X] Applicant claims small entity status. See 37 CFR 1.27. Fees above are reduced by ½.				$ 570	
			SUBTOTAL =	$ 570	
Processing fee of **$130.00** for furnishing the English translation later than 30 months from the earliest claimed priority date (37 CFR 1.492(i)). +				$ 0	
			TOTAL NATIONAL FEE =	$ 570	
Fee for recording the enclosed assignment (37 CFR 1.21(h)). The assignment must be by an appropriate cover sheet (37 CFR 3.28, 3.31). **$40.00** per property. +				$ 0	
			TOTAL FEES ENCLOSED =	$ 570	
				Amount to be refunded:	$
				Amount to be charged:	$

Under the Paperwork Reduction Act of 1995, no persons are required to respond to a collection of information unless it displays a valid OMB control number.

a. [ ] A check in the amount of $ _____ to cover the above fees is enclosed.

b. [X] Please charge my Deposit Account No. 50-1119 in the amount of $_____ to cover the above fees.

c. [X] The Director is hereby authorized to charge any additional fees which may be required, or credit any overpayment to Deposit Account No. 50-1119 as follows:

i. [ ] any required fee.

ii. [ ] any required fee except for excess claims fees required under 37 CFR 1.492(d) and (e) and multiple dependent claim fee required under 37 CFR 1.492(f).

d. [ ] Fees are to be charged to a credit card. **WARNING:** Information on this form may become public. Credit card information should not be included on this form. Provide credit card information and authorization on PTO-2038. The PTO-2038 should only be mailed or faxed to the USPTO. However, when paying the basic national fee, the PTO-2038 may NOT be faxed to the USPTO.

ADVISORY: If filing by EFS-Web, do **NOT** attach the PTO-2038 form as a PDF along with your EFS-Web submission. Please be advised that this is **not** recommended and by doing so your **credit card information may be displayed via PAIR**. To protect your information, it is recommended to pay fees online by using the electronic payment method.

NOTE: Where an appropriate time limit under 37 CFR 1.495 has not been met, a petition to revive (37 CFR 1.137(a) or (b)) must be filed and granted to restore the International Application to pending status.

Correspondence Address

[ ] The address associated with Customer Number: 26338 **OR** [ ] Correspondence address below

Name					
Address					
City		State		Zip Code	
Country		Telephone			
Email					

Signature	/mwresq/	Date	3/18/2013
Name (Print/Type)	Merle W Richman	Registration No. (Attorney/Agent)	38,282

Electronic Patent Application Fee Transmittal

Application Number:	
Filing Date:	
Title of Invention:	METHOD, SYSTEM, AND APPARATUS FOR DERMALOGICAL TREATMENT
First Named Inventor/Applicant Name:	Jongju Na
Filer:	Merle W. Richman
Attorney Docket Number:	NA001KR_PCTUS

Filed as Small Entity

U.S. National Stage under 35 USC 371 Filing Fees

Description	Fee Code	Quantity	Amount	Sub-Total in USD($)
Basic Filing:				
Basic National Stage Fee	2631	1	140	140
Natl Stage Search Fee - all other cases	2632	1	300	300
Natl Stage Exam Fee - all other cases	2633	1	360	360
Pages:				
Claims:				
Miscellaneous-Filing:				
Petition:				
Patent-Appeals-and-Interference:				

Description	Fee Code	Quantity	Amount	Sub-Total in USD($)
Post-Allowance-and-Post-Issuance:				
Extension-of-Time:				
Miscellaneous:				
			Total in USD ($)	**800**

Electronic Acknowledgement Receipt

EFS ID:	15300053
Application Number:	13825083
International Application Number:	PCT/KR12/01335
Confirmation Number:	9850
Title of Invention:	METHOD, SYSTEM, AND APPARATUS FOR DERMALOGICAL TREATMENT
First Named Inventor/Applicant Name:	Jongju Na
Customer Number:	26338
Filer:	Merle W. Richman
Filer Authorized By:	
Attorney Docket Number:	NA001KR_PCTUS
Receipt Date:	19-MAR-2013
Filing Date:	
Time Stamp:	16:14:19
Application Type:	U.S. National Stage under 35 USC 371

Payment information:

Submitted with Payment	no

File Listing:

Document Number	Document Description	File Name	File Size(Bytes)/ Message Digest	Multi Part /.zip	Pages (if appl.)
1	Preliminary Amendment	na001krpct_us-preliminary-amendment.pdf	83489 40715bbb84fa7827db2e95638bb3885445ad9ae8	no	13

Warnings:

Information:

2	Drawings-only black and white line drawings	na001krpct_us-replacement-drawings-bw.pdf	334101 836fa93f67f400f5e521a9d7d1e9398ff911237e	no	2
Warnings:					
Information:					
3	Specification	na001KRPCT_US-application.pdf	138531 9510315c9332e97b70c2acef669a3c0cff5a8dc5	no	25
Warnings:					
Information:					
4	Drawings-only black and white line drawings	na001KRPCT_US-drawings.pdf	19791438 2133a75f2f269a3406659b76cbd7e60693509f32a	no	21
Warnings:					
Information:					
5	Oath or Declaration filed	na001KRPCT_US-declaration.pdf	83899 053c7e4b2441001920c96506ddf9040e56229351	no	1
Warnings:					
Information:					
6	Transmittal of New Application	na001KRPCT_US-transmittal.pdf	139947 6e1ba1a7af257c6f8c33445a8baf4e7964a84aab	no	3
Warnings:					
Information:					
7	Fee Worksheet (SB06)	fee-info.pdf	33088 419232fba2a9a19f2cb5f3ed00df3d81d4ca5d93	no	2
Warnings:					
Information:					
			Total Files Size (in bytes):	20604493	

This Acknowledgement Receipt evidences receipt on the noted date by the USPTO of the indicated documents, characterized by the applicant, and including page counts, where applicable. It serves as evidence of receipt similar to a Post Card, as described in MPEP 503.

New Applications Under 35 U.S.C. 111
If a new application is being filed and the application includes the necessary components for a filing date (see 37 CFR 1.53(b)-(d) and MPEP 506), a Filing Receipt (37 CFR 1.54) will be issued in due course and the date shown on this Acknowledgement Receipt will establish the filing date of the application.

National Stage of an International Application under 35 U.S.C. 371
If a timely submission to enter the national stage of an international application is compliant with the conditions of 35 U.S.C. 371 and other applicable requirements a Form PCT/DO/EO/903 indicating acceptance of the application as a national stage submission under 35 U.S.C. 371 will be issued in addition to the Filing Receipt, in due course.

New International Application Filed with the USPTO as a Receiving Office
If a new international application is being filed and the international application includes the necessary components for an international filing date (see PCT Article 11 and MPEP 1810), a Notification of the International Application Number and of the International Filing Date (Form PCT/RO/105) will be issued in due course, subject to prescriptions concerning national security, and the date shown on this Acknowledgement Receipt will establish the international filing date of the application.

IN THE UNITED STATES PATENT AND TRADEMARK OFFICE

Applicant(s): Na	
Application No.: Not Yet Assigned	Art Unit: Unknown
Filed: Herewith	Examiner: Unknown
Title: METHOD, SYSTEM, AND APPARATUS FOR DERMALOGICAL TREATMENT	
Attorney Docket No.: NA001KRPCT_US	

PRELIMINARY AMENDMENT UNDER 37 CFR 1.115

Commissioner for Patents
P.O. Box 1450
Alexandria, VA 22313-1450

Dear Sir:

Please amend this application as follows:

In the specification:

In paragraph 0035:

In an embodiment the plate may include about 140 pins or needles 230 uniformly separated. Each needle may be about 0.1 to 0.4 mm in diameter and 0.2 mm to 1.4 mm in length including 0.3 mm diameter and 0.8 mm in length in an embodiment. The elastic section or layer 270 may be comprised of a combination of elastomeric materials and non-elastomeric materials. The elastomeric materials may include plastics, rubber (synthetic or natural), and spring(s). The pin section ~~230~~ 250 may be coupled directly or indirectly to the upper section 290 via the elastic section ~~250~~ 270, including via glues, screws, welds, or other connection. In an embodiment the pin section 250 may include elastomers to enable at least partial deformation of the pin section 250 about the pins 230.

In paragraph 0043:

In an embodiment the plate may include about 140 pins or needles 351 uniformly separated. Each needle may be about 0.1 to 0.4 mm in diameter and 0.2 mm to 1.4 mm in length including 0.3 mm diameter and 0.8 mm in length in an embodiment. The elastic section or layer 355 may be comprised of a combination of elastomeric materials and non-elastomeric materials. The elastomeric materials may include plastics, rubber (synthetic or natural), and spring(s). The pin section 353 may be coupled directly or indirectly to the upper section 357 via the elastic section ~~353~~ 355, including via glues, screws, welds, or other connection. In an embodiment the pin section 353 may include elastomers to enable at least partial deformation of the pin section 353 about the pins 351.

In paragraph 0044:

FIGS. 3A and 3B are simplified isometric diagrams of acupuncture apparatus 400, 460 including at least one pin 451 that may be coupled to an electrical signal via an internal wire 458. Each apparatus 400, 460 includes curved roller 450 having a plurality of acupuncture pins 451 where the pins 451 may be similar to pins 351. In apparatus 400, the electrical lead wire ~~400A~~ 300A may be coupled to an electrical interface 410 in the apparatus handle 430 where the interface 410 is electrically coupled to the internal wire 458. In apparatus 460, the handle 430 may include a signal generator 470 similar to generator 370, switch 475, and conduction surface 490. Apparatus 460 may operate similar to apparatus 360 in operation other than the rolling capability of the apparatus 460, 400. In an embodiment the rollers 450 may have various configurations to conform to a dermal area to be treated.

In paragraph 0047:

In an embodiment the local controller 54 and battery 52 may also be embedded in the upper section 290, 357, pin section 230, 351, or the handle 220, 330, or separately between these sections. The controller 54 may be electrically coupled to the one or more ~~LEDS~~ LEDs 32A, 32B. The controller 54 may also be coupled to a battery 52. The controller 54 may generate one or more signals for LEDs 32A, 32B as a function of a user switch 75, 56. The signals may vary as a function of the first and second frequency ranges. The controller 54 may include one or more timers 58 that may limit the application of energy to the LEDs 32A, 32B to predetermined time intervals. In an embodiment the controller may also be coupled to an antenna ~~56~~ 104 to receive or transmit one or more signals related to the transmission of energy to one or more LEDs 32A, 32B. In an embodiment the system 10 may be configured to treat a particular segment of dermalogical cells such as a face. The apparatus 10 may be configured to conform to a user's anatomy so that emitted light is focused on dermalogical cells. In another embodiment 200, the system 200 may be configured to treat another anatomical region including dermalogical cells on an arm, leg, chest, hands, feet, neck, or other region.

In paragraph 0048:

In an embodiment 510 shown in FIG. 4B, a controller 54, an antenna 104, and a power source 60 may be located ~~in~~ external to the apparatus 10, 320, 360. The power source 60 may be coupled to the controller 54. The controller 54 may be coupled to one or more LEDs 32A, 32B via one or more electric wires 106. The controller 54 may generate one or more signals for LEDs 32A, 32B as a function of the user switch 56. The signals may vary as a function of the first and second frequency ranges. The controller 54 may include one or more timers 58 that may limit the application of energy to the LEDs 32A, 32B to predetermined time intervals. In an embodiment the controller may also be coupled to an antenna 104 to receive or transmit one or more signals related to the transmission of energy to one or more LEDs 32A, 32B.

In paragraph 0049:

As shown in Fig. 4C, in ~~In~~ any of the above apparatus 10, 320, 350, 360, 400, 460, the plate or roller 200, 350, 450 may include a plurality of embedded LED lens 536, a fiber optic pathway 534, and an LED 532. In this embodiment, system 530 ~~the~~ LED 532 shown in FIG. 4C may be coupled to lens 536 via the fiber optic pathway 534. The controller 540 may generate an LED signal via the LED 532 that is transmitted to dermalogical cells via the lens 536 and the fiber optic pathway 534.

In paragraph 0069:

The NDMC 911B may control the deployment of one or more needles 924A of a deployable needle module 924 (FIG. 9C) based on one or more user selected operational parameters. The parameters may determine the depth and duty cycle related to the needle(s) 924A deployment in an embodiment. The signals generated by the NDMC 911B to control needle deployment may vary as a function of motor(s) (922A, FIG. 9C) employed to drive one or more needles 924A. As described above an electrical signal may also be applied to the needle(s) 924A to cause vibration of the needles or enable cutting, blending, and coagulation of the tissue in which the needles 924A are deployed. The RFSG 911A may generate one or more electrical signals to be applied to one or more needles 924A based on the selected operational parameters. An electrical signal may be applied to a single needle 924A, group of needles 924A (mono-polar configuration) or pair(s) of needles 924A (bipolar configuration) in an embodiment. In an embodiment the RFSG 911A may apply signals 650, 630, 640, 670 shown in FIGs. 5A, 5B, and 6, a combination thereof, or other signals.

In paragraph 0073:

As shown in FIGs. 9C and 9D the deployable needle module 924 may include at least one deployable needle 924A, MLM connecting arm and drive coupling tabs 924B, and MLM connecting/locking arms 924C. The MLM connecting/locking arms 924C may be configured to engage and lock to DCM 924 interface 925 recesses 925D (FIG. 10F). The MLM connecting arm and drive coupling tabs 924B may be configured to disengage connecting/locking arms 924C from the MLM interface 925 when the tabs 924B are depressed inward in an embodiment (as shown in FIG. 10B). The tabs 924B may further displace drive shaft connecting arms 924D (FIG. 10A) inward or centrally when the tabs 924B are depressed inwardly (as also shown in FIG. 10B). When the connecting/locking arms 924C are depressed inwardly or centrally (FIG. 9C and 9D) from an outward position (FIG. 10B). The arms 924C may engage the interface 925 recesses 925D to securely hold the DNM 924 to the MLM 922. The arms 924C may also displace the tabs 924B outwardly and cause the drive shaft connecting arms 924D to return outwardly.

In paragraph 0078:

To complete the coupling of a DNM 924 to the MLM 922, the coupling arms 924C may compressed inwardly as shown in FIG. 10D. The compression of the coupling arms 924C may deflect the tabs or arms 924B outwardly. Such outward deflection of the arms 924B may enable the drive shaft coupling arms 924D to return to a non-deflected state and securely engage the MLM 922 drive shaft 922C tip 922F recess 922G (as shown in FIG. 10D). In an embodiment a single coupling arm 924C, drive shaft coupling arm 924D, and tab 924B may be employed in an DNM 924. After the secure coupling of the DNM 924 to the MLM 922, the MLM 922 via the motor(s) 922A may ~~controllable~~ controllably deploy one or more needles 924A as shown in FIG. 10E. FIG. 10F is a simplified cross-sectional diagram of a DNM interface 925 according to various embodiments.

In paragraph 0079:

As noted the interface 925 may include one or more recesses 925D to be securely engaged to DNM 924 coupling arms 924C. The interface 925 may also include several fenestrations or openings 925A, 925B, 925C (FIG. 10F). The central fenestration 925A may be sized to enable passage of the MLM 922 drive shaft 922C tip 922F. The fenestrations 925C may be sized and located above one or more photon modules 922I to enable photons generated by the photon modules 922I to pass into the DNM 924. In an embodiment the DNM 924 outer casing 924E may be translucent and act as a waveguide to communicate photons to the needle area of the DNM 924. The fenestrations 925B may be sized and configured to enable electrical coupling pins 924G (FIG. 11A) passage from the DNM 924 to electrical couplings of the MLM 922. The pins 924G may communicate electrical signals from the RFSG 911A to one or more needles 924A via the wires 914B and MLM 922.

In paragraph 0080:

FIG. 11A is a simplified, partial, cross-sectional diagram of DNM 924 coupled to a MLM 922 with needles 924A deployed according to various embodiments. As shown in FIG. 11A, the DNM 924 may further include electrical coupling pins 924G set with a spring loaded base 924H (in an embodiment). As noted the pins 924G may extend to electrical contacts in the MLM 922 via the interface 925 fenestrations 925B. ~~Along~~ Although a pair of pins 924G is shown, one or more pins 924G may be employed in a DNM 924 according to various embodiments. A drive shaft coupling arm 924D may include an offset 924I where the offset may be configured to engage a tab or arm 924B.

In paragraph 0081:

As shown in FIG. 11A when the needle array or assemble 924F is deployed depression of the tabs 924B inwardly will not engage the drive shaft coupling arms 924D (via the offsets 924I). Such a configuration may prevent unintentional decoupling of the DNM 924 to the MLM 922 when the needle assembly 924F is at least partially deployed. As shown in FIG. 11A, the electrical contact pin 924G is sized to fit within the spring loaded based 924H. In an embodiment the internal spring 924M ~~is~~ (FIG. 11C) may force extension of the pin 924G to maintain electrical conduction with the MLM 922 as the needle assembly 924F is moved (recessed and deployed to various depths). FIG. 11B is a simplified, cross-sectional diagram of a DNM 924 needle assembly 924F according to various embodiments. FIG. 11C is a simplified, cross-sectional, exploded diagram of the DNM 924 needle assembly 924F according to various embodiments. As shown in FIGs. 11B and 11C, the needle assembly 924F may include a pin cover 924J, drive arm module 924L, needles 924A, pins 924G with bases 924H, and needle printed circuit board (PCB) 924K.

In paragraph 0084:

In a blend operational mode (activity 934A), a user may select the electrical signal intensity, start delay, and duty cycle (activity 934B) and needle deployment depth and number of shots per activation (activity 934C). The duty cycle may include the delay before energy and ~~need~~ needle deployment, the time the energy and needles are deployed, and the subsequent off or rest time before the next possible duty cycle. As noted above the motor(s) 922A may enable precise needle extension (effective depth) control. In an embodiment the motor(s) 922A may include a transverse motor that converts rotational force to longitudinal force. The motor may be a Haydon model number: 21H4AB-05-049 having a motor speed of about 0.005mm/msec and motor power of about 1000 Hz approximately 40N (Newton) (described in detail at www.haydonkerk.com and whose specifications are incorporated by reference).

In the claims:

1. (Currently Amended) A method of treating dermalogical tissue, comprising:

placing a user holdable device including a proximal end and a distal end, the distal end including a plurality of extendable needles from a device distal end surface on or near dermalogical tissue to be treated;

energizing a motor coupled to the extendable needles to cause ~~at least one needle~~ a plurality of the extendable needles to extend a desired distance from the distal end surface; and

energizing the ~~at least one needle~~ plurality of the extendable needles via a signal generator electrically coupled to the ~~at least one needle~~ plurality of the extendable needles ~~to cause vibration of the at least one needle~~.

2. (Currently Amended) The method of claim 1, further comprising placing a dermalogical chemical one of on at least a portion of the dermalogical tissue, at least a portion of the ~~inner~~ end surface, and the ~~at least one needle~~ plurality of the extendable needles.

3. (Currently Amended) The method of claim 1, wherein the device further includes a proximal handle and a releasably couplable deployable needle assembly, the deployable needle assembly mechanically separatably from the proximal handle, and the extendable needles located in the needle assembly.

4. (Currently Amended) The method of claim 3, wherein the proximal handle includes the needle deploying motor, the motor including a draft shaft releasably couplable to the deployable needle assembly.

5. (Currently Amended) The method of claim 4, wherein the proximal handle further includes at least one embedded LED therein and further including energizing the LED when the signal generator is energized, the at least one embedded LED illuminating the deployable needle assembly when energized.

6. (Currently Amended) The method of claim 5, ~~comprising energizing the LED to generate one of a blue and an infra-red photonic signal~~ wherein the proximal handle includes a plurality of electrical conductors and the deployable needle assembly includes a plurality of restorably deflectable electrical contacts couplable to the proximal handle plurality of electrical conductors and communicating electrical signals from the proximal handle plurality of electrical conductors to the plurality of the extendable needles.

7. (Currently Amended) The method of claim 4 6, wherein ~~the needle deploying motor is coupled the needle assembly via a drive shaft~~ each of the plurality of restorably deflectable electrical contacts includes a depressible pin.

8. (Currently Amended) The method of claim 5, wherein the releasably couplable deployable needle assembly includes a translucent section to communicate ~~the photon signal~~ illumination from the least one embedded LED to the ~~at least one needle~~ plurality of extendable needles.

9. (Currently Amended) The method of claim ~~3~~ 6, ~~further comprising employing an RF signal generator electrically coupled to the at least one needle to generate a signal that causes vibration of the at least one needle~~ wherein a first deflectable electrical contact is coupled to a first plurality of the plurality of extendable needles and a second deflectable electrical contact is coupled to a second, different plurality of the plurality of extendable needles.

10. (Currently Amended) The method of claim 3, ~~wherein tissue penetration by the at least one needle creates a micro-wound and further comprising employing an RF signal generator electrically coupled to the at least one needle to generate a signal that causes vibration of the at least one needle sufficient to increase the tissue micro-wound~~ further comprising employing the signal generator to energize the plurality of the extendable needles with energy to one of cut, blend, or coagulate dermalogical tissue.

11. (Currently Amended) An apparatus for treating dermalogical tissue, comprising:

a user holdable device including a proximal end and a distal end, the distal end ~~and a~~ including a plurality of extendable needles, ~~at least one needle~~ a plurality of the extendable needles extendable from the device distal end surface;

a motor coupled to ~~at least one needle~~ the plurality of the extendable needles that causes the ~~at least one needle~~ plurality of the extendable needles to extend a desired distance from the distal end surface when the motor is energized with a particular signal; and

a signal generator electrically coupled to the ~~at least one needle~~ plurality of the extendable needles to ~~cause vibration of the at least one needle when the at least one needle energized with a particular signal~~ energize the plurality of the extendable needles.

12. (Currently Amended) The apparatus of claim 11, wherein the device ~~includes a~~ proximal end includes an electrical connector couplable to the signal generator.

13. (Currently Amended) The apparatus of claim 11, wherein the device further includes a proximal handle and a releasably couplable deployable needle assembly, the deployable needle assembly mechanically separatably from the proximal handle, and the extendable needles located in the needle assembly.

14. (Currently Amended) The apparatus of claim ~~12~~ 13, wherein the proximal handle includes the needle deploying motor, the motor including a draft shaft releasably couplable to the deployable needle assembly.

15. (Currently Amended) The apparatus of claim 14, wherein the proximal handle further includes at least one embedded LED therein and the apparatus further including a photonic signal generator electrically coupled to the least one embedded LED, the at least one embedded LED illuminating the deployable needle assembly when energized.

16. (Currently Amended) The apparatus of claim 15, ~~wherein the at least one embedded LED generates one of a blue and an infra-red photonic signal~~ the proximal handle further including a plurality of electrical conductors and the deployable needle assembly further including a plurality of restorably deflectable electrical contacts couplable to the proximal handle plurality of electrical conductors and communicating electrical signals from the proximal handle plurality of electrical conductors to the plurality of the extendable needles.

17. (Currently Amended) The apparatus of claim ~~14~~ 16, ~~further comprising a drive shaft coupling the motor to the at least one needle~~ wherein each of the plurality of restorably deflectable electrical contacts includes a depressible pin.

18. (Currently Amended) The apparatus of claim 15, wherein the releasably couplable deployable needle assembly includes a translucent section that communicates ~~photon signals~~ illumination from the least one embedded LED to the plurality of extendable needles.

19. (Currently Amended) The apparatus of claim ~~13~~ 16, ~~further comprising an RF signal generator electrically coupled to the at least one needle, the RF signal generator causing vibration of the at least one needle when the needle is energized with a particular signal~~ wherein a first deflectable electrical contact is coupled to a first plurality of the plurality of extendable needles and a second deflectable electrical contact is coupled to a second, different plurality of the plurality of extendable needles.

20. The apparatus of claim 13, wherein ~~tissue penetration by the at least one needle creates a micro-wound and further comprising an RF~~ the signal generator ~~electrically coupled to the at least one needle, the RF signal generator causing vibration of the at least one needle when the needle is energized with a particular signal sufficient to increase the tissue micro-wound~~ energizes the plurality of the extendable needles with energy to one of cut, blend, or coagulate dermalogical tissue.

In the drawings:

Please replace pages 8 and 20 of the drawings with attached replacement pages. In the drawings, FIG. 4A reference 56 has been changed to 104. In FIG. 11 springs (reference 924M) has been added. Support for the spring addition is present in paragraph 0081 of the specification as filed.

REMARKS

Claims 1-20 were pending. Claims 1-20 have been amended. Entry of this preliminary amendment is respectfully requested. Applicant has also amended the specification to correct minor grammatical or reference errors and replaced two drawings to correct errors. No new matter has been added. Reconsideration and further examination is respectfully requested.

Applicants have made a diligent effort to place the claims in condition for allowance. However, should there remain unresolved issues that require adverse action, it is respectfully requested that the Examiner telephone Merle Richman, Applicants' Attorney at 858 320-2030 so that such issues may be resolved as expeditiously as possible.

For these reasons, and in view of the above amendments, this application is now considered to be in condition for allowance and such action is earnestly solicited.

Respectfully Submitted,

3/16/2013_____
Date

/mwresq/_____
Merle Richman
Patent Attorney
Reg. No. 38282

Merle Richman
Patent Attorney
Customer ID - 26338
PO Box 3333
La Jolla, CA 92038-3333

Tel. 858 320-2030

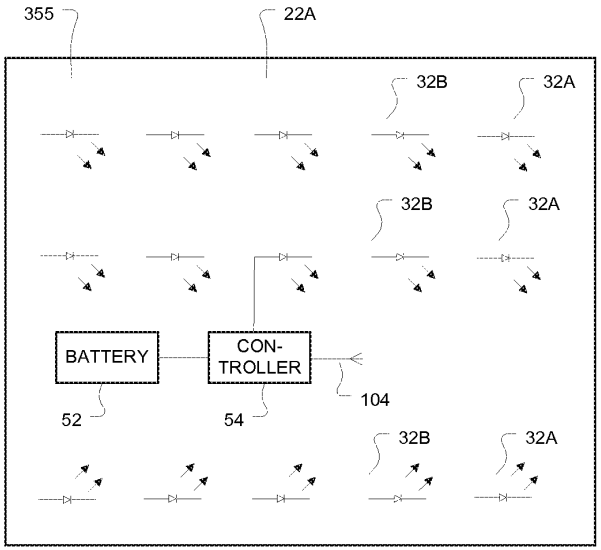

FIGURE 4A 520

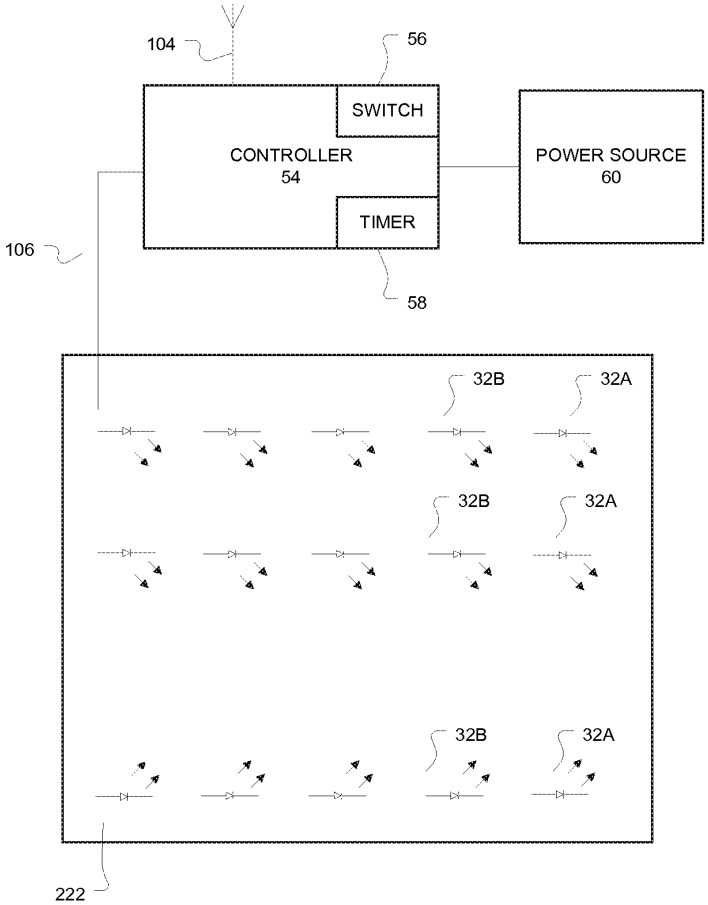

FIGURE 4B 510

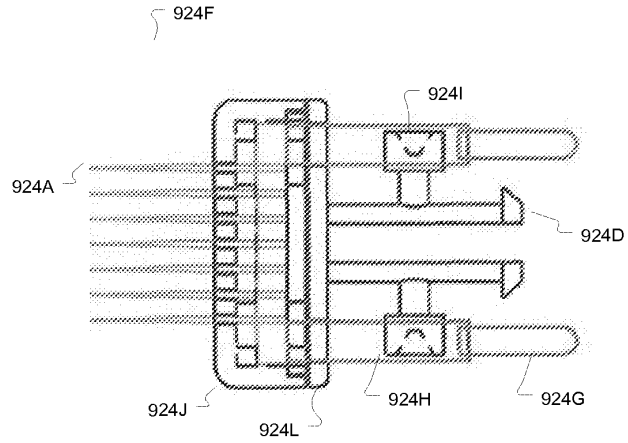

FIGURE 11B

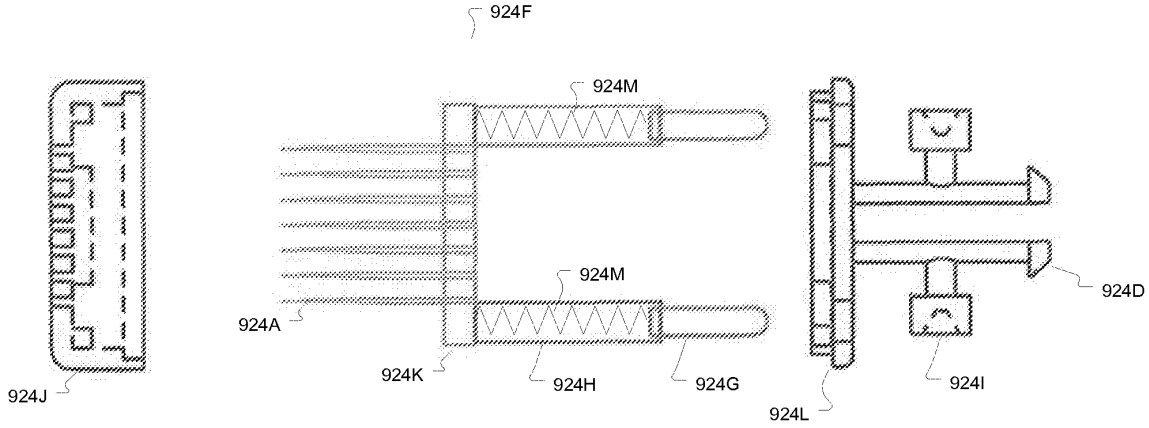

FIGURE 11C

METHOD, SYSTEM, AND APPARATUS FOR DERMALOGICAL TREATMENT

Cross Reference to Related Applications

[0001] The present application claims the benefit of priority to Republic of Korea Application Number 10-2008-0076993, entitled "Electrical system, skin, skin care and cosmetic electricity," filed on August 6, 2008, PCT Application Number PCT/US2008/074131, entitled “METHOD, SYSTEM, AND APPARATUS FOR DERMALOGICAL TREATMENT”, Attorney Docket No. NA001PCT filed on August 22, 2008, and US Application Number 13/060,274, entitled “METHOD, SYSTEM, AND APPARATUS FOR DERMALOGICAL TREATMENT”, Attorney Docket No. NA001US filed on February 22, 2011, the entirety of each is incorporated by reference.

Technical Field

[0002] Various embodiments described herein relate generally to treating dermalogical tissue, including systems, and methods used in treating dermalogical tissue.

Background Information

[0003] It may be desirable to treat dermalogical tissue; the present invention provides such treatment.

Brief Description of the Drawings

[0004] FIG. 1A is a simplified isometric diagram of a dermalogical treatment apparatus according to various embodiments.

[0005] FIG. 1B is a simplified, side diagram of the dermalogical treatment apparatus according to various embodiments.

[0006] FIG. 1C is a simplified, exploded layer view of the dermalogical treatment apparatus according to various embodiments.

[0007] FIG. 1D is a simplified view of a layer of a dermalogical treatment apparatus according to various embodiments.

[0008] FIG. 2A is a simplified isometric diagram of a dermalogical treatment architecture according to various embodiments.

[0009] FIG. 2B is a simplified cross-sectional diagram of a dermalogical treatment apparatus according to various embodiments.

[0010] FIG. 2C is a simplified cross-sectional diagram of another dermalogical treatment apparatus according to various embodiments.

[0011] FIG. 2D is a simplified cross-sectional diagram of another dermalogical treatment apparatus according to various embodiments.

[0012] FIG. 2E is a simplified view of a layer of a dermalogical treatment apparatus according to various embodiments.

[0013] FIG. 2F is a simplified, exploded view of layers of the dermalogical treatment apparatus according to various embodiments.

[0014] FIG. 3A is a simplified isometric diagram of a dermalogical treatment apparatus according to various embodiments.

[0015] FIG. 3B is a simplified isometric diagram of another dermalogical treatment apparatus according to various embodiments.

[0016] FIG. 4A is a simplified view of a layer of a dermalogical treatment apparatus according to various embodiments.

[0017] FIG. 4B is a simplified view of a layer and apparatus of a dermalogical treatment system according to various embodiments.

[0018] FIG. 4C is a simplified view of a layer and apparatus of a dermalogical treatment system according to various embodiments.

[0019] FIGs. 5A-6 are diagrams of signals that may be applied to one or more dermalogical treatment systems according to various embodiments.

[0020] FIG. 7A-7C are flow diagrams illustrating dermalogical treatment system processing algorithms according to various embodiments.

[0021] FIG. 8 is a block diagram of an article according to various embodiments.

[0022] FIG. 9A is a simplified block diagram of a dermalogical treatment architecture according to various embodiments.

[0023] FIG. 9B is a block diagram of an article according to various embodiments that may be employed in architecture of FIG. 9A.

[0024] FIG. 9C is a simplified cross-sectional diagram of a cartridge based dermalogical treatment apparatus with the needles retracted according to various embodiments.

[0025] FIG. 9D is a simplified cross-sectional diagram of a cartridge based dermalogical treatment apparatus with the needles deployed according to various embodiments.

[0026] FIG. 10A-10D are simplified, partial, cross-sectional diagrams of a cartridge in various stages of attachment to a dermalogical treatment apparatus according to various embodiments.

[0027] FIG. 10E is a simplified, partial, cross-sectional diagram of a dermalogical treatment apparatus with needles deployed according to various embodiments.

[0028] FIG. 10F is a simplified cross-sectional diagram of a cartridge based dermalogical treatment apparatus cartridge interface according to various embodiments.

[0029] FIG. 11A is a simplified, partial, cross-sectional diagram of a dermalogical treatment apparatus cartridge coupled to a handle with needles deployed according to various embodiments.

[0030] FIG. 11B is a simplified, cross-sectional diagram of a cartridge needle assembly according to various embodiments.

[0031] FIG. 11C is a simplified, cross-sectional, exploded diagram of a cartridge needle assembly according to various embodiments.

[0032] FIG. 12 is a flow diagram illustrating a dermalogical treatment system processing algorithms according to various embodiments.

Detailed Description

[0033] FIG. 1A is a simplified isometric diagram and FIG. 1B is a simplified side view of a dermalogical treatment apparatus 10 according to various embodiments. The apparatus 10 may include a user handle 220 coupled to an acupuncture plate 200. In an embodiment the plate 200 may be elastically coupled to the handle segment 222 via an elastomeric section 210. The elastomeric section may be comprised of a combination of elastomeric materials and non-elastomeric materials. The elastomeric materials may include plastics, rubber (synthetic or natural), and spring(s).

[0034] FIG. 1C includes a simplified exploded view of an embodiment of an acupuncture plate 200 according to various embodiments. The plate 200 may include an upper, substantially rigid section or layer 290, deformable or elastic section 270 or layer, and acupuncture section or layer 250. The acupuncture section 250 may include a plurality of acupuncture pins or needles 230. FIG. 1D is a simplified bottom view of the plate 200 showing the location or holes 212 for the pins or needles 230. In an embodiment the plate 200 may have a rectangular cross section having a dimensional about 1 to 4 cm in width and about 1 to 6 cm in length. The plate 200 may any shape including circular, elliptical, polygon, or other shape where the shape may be particular to a dermalogical area to be treated.

[0035] In an embodiment the plate may include about 140 pins or needles 230 uniformly separated. Each needle may be about 0.1 to 0.4 mm in diameter and 0.2 mm to 1.4 mm in length including 0.3 mm diameter and 0.8 mm in length in an embodiment. The elastic section or layer 270 may be comprised of a combination of elastomeric materials and non-elastomeric materials. The elastomeric materials may include plastics, rubber (synthetic or natural), and spring(s). The pin section 230 may be coupled directly or indirectly to the upper section 290 via the elastic section 250, including via glues, screws, welds, or other connection. In an embodiment the pin section 250 may include elastomers to enable at least partial deformation of the pin section 250 about the pins 230.

[0036] In operation a user may employ the apparatus 10 to create a plurality of micro-wounds or holes in dermalogical layers of a mammal's 20 skin or dermis. The micro-wound or hole creation may improve the absorption or application of one or more chemicals applied on or about the micro-wounds or holes.

[0037] FIG. 2A is a simplified diagram of a dermalogical treatment architecture 310 according to various embodiments. Architecture 310 includes an acupuncture apparatus 320 and an

electrical signal generation system 300. The electrical signal generation system 300 may be electrically coupled to the acupuncture apparatus 320 via one or more wires 300A and to a mammal 20 to be treated via one or more wires 300B. FIG. 2B is a simplified cross-sectional diagram of the acupuncture apparatus 320 according to various embodiments. The apparatus 320 may include a handle 330, elastic section 333, electrical interface 340, internal wire(s) 331and plate 350. The pins 351 may have a length A (0.3 mm to 2.1 mm in an embodiment) where at least one pin 351 is electrically coupled to the electrical interface 340 via the internal wire 331. The electrical interface 340 may be removably connected to the system 300 wire 300A.

[0038] The electrical signal generation system 300 may generate a variety of signals (such as shown in FIGS. 5A to 6) to vibrate one or more pins 351 electrically coupled to the system 300 via the internal wire 331 and lead 300A. A pin vibration 351 may increase the micro-wound or cut formed in dermis by the pin 351. FIG. 2C is a simplified cross-sectional diagram of an acupuncture apparatus 360 according to various embodiments. The apparatus 360 may include a handle 330, an elastic section 333, an electrical conductive interface 390, internal wire(s) 331, signal generator 370, switch 375, and plate 350. The signal generator 370 may be coupled to at least one pin 351 via internal wire 331 and coupled to the conductive interface 390.

[0039] The signal generator or module 370 may generate a variety of signals (such as shown in FIGS. 5A to 6) to vibrate one or more pins 351 electrically coupled to the system 300 via the internal wire 331 and the conductive interface 390. In operation a user 20 may touch the conductive interface 390 and place one or more electrically coupled pins 351 in contact with their dermis to form an electrical pathway from the pin 351 to the electrical conductive interface 390. The signal generator 370 may include a battery to supply energy to generate one or more electrical signals. The switch 375 coupled to the generator 370 may cause the generator to produce one or more electrical signals for a predetermined time interval or until the switch 375 is triggered again. As noted a pin vibration 351 may increase the micro-wound or cut formed in dermis by the pin 351.

[0040] FIG. 2D is a simplified cross-sectional diagram of an acupuncture apparatus 362 according to various embodiments. The apparatus 362 may include a handle 330, an elastic section 333, internal wire(s) 331, 332, signal generator 370, switch 375, and plate 350. The signal generator 370 may be coupled to at least one pin 351 via internal wire 331 and coupled to at least one other pin 352 via internal wire 332. When active the pins 351, 352 may form at least one dipole pair. The

signal generator or module 370 may generate a variety of signals (such as shown in FIGS. 5A to 6) to vibrate one or more dipole pair or bipolar pins 351, 352.

[0041] FIG. 2F includes a simplified exploded view of an embodiment of an acupuncture plate 350 including at least one electrically coupled pin 351 according to various embodiments. The plate 350 may include an upper, substantially rigid section or layer 357, deformable or elastic section 355 or layer, and acupuncture section or layer 353. The acupuncture section 353 may include a plurality of acupuncture pins or needles 351 where at least one pin 351 is electrically coupled to the wire 331. In a bipolar configuration a second wire 332 may be coupled to at least one other pin 351. FIG. 2E is a simplified bottom view of the plate 350 showing the pins or needles 359, 357 where the pins may be electrically coupled to a first wire 331 and a second wire 332 to form dipole pair (bipolar pins).

[0042] In an embodiment the plate 350 may have a rectangular cross section having a dimensional about 1 to 4 cm in width and about 1 to 6 cm in length. The plate 350 may any shape including circular, elliptical, polygon, or other shape where the shape may be particular to a dermalogical area to be treated.

[0043] In an embodiment the plate may include about 140 pins or needles 351 uniformly separated. Each needle may be about 0.1 to 0.4 mm in diameter and 0.2 mm to 1.4 mm in length including 0.3 mm diameter and 0.8 mm in length in an embodiment. The elastic section or layer 355 may be comprised of a combination of elastomeric materials and non-elastomeric materials. The elastomeric materials may include plastics, rubber (synthetic or natural), and spring(s). The pin section 353 may be coupled directly or indirectly to the upper section 357 via the elastic section 353, including via glues, screws, welds, or other connection. In an embodiment the pin section 353 may include elastomers to enable at least partial deformation of the pin section 353 about the pins 351.

[0044] FIGS. 3A and 3B are simplified isometric diagrams of acupuncture apparatus 400, 460 including at least one pin 451 that may be coupled to an electrical signal via an internal wire 458. Each apparatus 400, 460 includes curved roller 450 having a plurality of acupuncture pins 451 where the pins 451 may be similar to pins 351. In apparatus 400, the electrical lead wire 400A may be coupled to an electrical interface 410 in the apparatus handle 430 where the interface 410 is electrically coupled to the internal wire 458. In apparatus 460, the handle 430 may include a signal generator 470 similar to generator 370, switch 475, and conduction surface 490. Apparatus 460 may

operate similar to apparatus 360 in operation other than the rolling capability of the apparatus 460, 400. In an embodiment the rollers 450 may have various configurations to conform to a dermal area to be treated.

[0045] In any of the above apparatus 10, 320, 350, 360, 400, 460, the plate or roller 200, 350, 450 may include a plurality of embedded LEDs 32A, 32B, a battery 52, a controller 54, and an antenna 56 as shown in FIG. 4A. In an embodiment the LED 32A may be configured to emit energy of a first particular frequency range and the LED 32B may be configured to emit energy of a second particular frequency range. The surface 22 of a roller 450, plate 200, 350, 450 may also be embedded with a chemical 22A that may be used to treat dermalogical cells. The chemical 22A may be reactive to the first and the second frequency ranges. Further dermalogical cells may be reactive to the first and the second frequency ranges. In addition, the combination of the chemical 22A and the application of the first and the second frequency ranges to the chemical 22A and dermalogical cells may have a synergetic effect.

[0046] In an embodiment the chemical 22A may be applied directly to the dermalogical cells to be treated. In a further embodiment a chemical 22A may not be employed in addition to the apparatus 10, 320, 350, 360, 400, 460. In an embodiment the pin section 250, 353, may be translucent and comprised of polyurethane, medical silicon, or other pliable, translucent, hypoallergenic material.

[0047] In an embodiment the local controller 54 and battery 52 may also be embedded in the upper section 290, 357, pin section 230, 351, or the handle 220, 330, or separately between these sections. The controller 54 may be electrically coupled to the one or more LEDS 32A, 32B. The controller 54 may also be coupled to a battery 52. The controller 54 may generate one or more signals for LEDs 32A, 32B as a function of a user switch 75, 56. The signals may vary as a function of the first and second frequency ranges. The controller 54 may include one or more timers 58 that may limit the application of energy to the LEDs 32A, 32B to predetermined time intervals. In an embodiment the controller may also be coupled to an antenna 56 to receive or transmit one or more signals related to the transmission of energy to one or more LEDs 32A, 32B. In an embodiment the system 10 may be configured to treat a particular segment of dermalogical cells such as a face. The apparatus 10 may be configured to conform to a user's anatomy so that emitted light is focused on dermalogical cells. In another embodiment 200, the system 200 may be configured to treat another

anatomical region including dermalogical cells on an arm, leg, chest, hands, feet, neck, or other region.

[0048] In an embodiment 510 shown in FIG. 4B, a controller 54, an antenna 104, and a power source 60 may be located in external to the apparatus 10, 320, 360. The power source 60 may be coupled to the controller 54. The controller 54 may be coupled to one or more LEDs 32A, 32B via one or more electric wires 106. The controller 54 may generate one or more signals for LEDs 32A, 32B as a function of the user switch 56. The signals may vary as a function of the first and second frequency ranges. The controller 54 may include one or more timers 58 that may limit the application of energy to the LEDs 32A, 32B to predetermined time intervals. In an embodiment the controller may also be coupled to an antenna 104 to receive or transmit one or more signals related to the transmission of energy to one or more LEDs 32A, 32B.

[0049] In any of the above apparatus 10, 320, 350, 360, 400, 460, the plate or roller 200, 350, 450 may include a plurality of embedded LED lens 536, a fiber optic pathway 534, and an LED 532. In this embodiment the LED 532 may be coupled to lens 536 via the fiber optic pathway 534. The controller 540 may generate an LED signal via the LED 532 that is transmitted to dermalogical cells via the lens 536 and the fiber optic pathway 534.

[0050] FIGS.5A-5B are diagrams of electrical signal waveforms 650, 630, 640 that may be applied to one or more LEDs 32A, 32B, 532 and to the pins 230, 351, 451 according to various embodiments. The signal waveform 650 includes several square-wave pulses 652, 654, 656 that may be applied to an LED 32A, 32B, 532. Each pulse 652, 654, 656 may a have a similar magnitude and envelope. The waveform 650 may be used to energize an LED 32A, 32B, 532 and to the pins 230, 351, 451 periodically P1 for a predetermined interval T1 where each pulse 652, 654, 656 has a amplitude A1. In an embodiment, A1 may be about 0.1 milliamperes (mA) to 10 mA, the pulse width T1 may be about 100 microseconds (μs) to 500 μs and the period P1 may from 100 ms to 500 ms as a function of the energy required to create capacitance in a liquid. In another embodiment, A1 may be about 0.5 milliamperes (mA) to 5 mA, the pulse width T1 may be about 200 microsecond (μs) and the period P1 may about 250 ms as a function of the energy to drive an LED or cause one or more pins 230, 351, 451 to vibrate.

[0051] In FIG. 5B a signal waveform 630 may be applied to a first LED 32A, 32B, 532 module or group and to the pins 230, 351, 451 and a second waveform 640 may be applied or used to energize a second LED 32A, 32B, 532 module and the pins 230, 351, 451, 352. The signal

waveform 630 includes several square-wave pulses 632, 634, and 636 and the signal waveform 640 includes several square-wave pulses 642, 644, and 646. Each pulse 632, 634, 636, 642, 644, 646 may a have a similar magnitude and envelope. The waveform 630 may be used to energize a first LED 32A, 32B, 332 module and the pins 230, 351, 451 periodically P1 for a predetermined interval T1 where each pulse 632, 634, 636 has an amplitude A1. The waveform 640 may be used to energize a second LED 32A, 32B, 332 module and the pins 230, 351, 451 periodically P2 for a predetermined interval T2 where each pulse 642, 644, 646 has an amplitude B1. The pulse width T1, T2 may be about 100 microseconds (μs) to 500 μs and the period P1, P2 may from 100 ms to 500 ms as a function of the energy to affect dermalogical cells or chemicals 22A. In another embodiment, A1, A2 may be about 0.5 milliamperes (mA) to 5 mA, the pulse width T1, T2 may be about 200 microsecond (μs) and the period P1, P2 may about 250 ms as a function of the energy required to affect dermalogical cells or chemicals 22A. In an embodiment the pulses 632, 634, 636 do not substantially overlap the pulses 642, 644, 646. In an embodiment T1 > T2 and P2 is an integer multiple of P1.

[0052] FIG. 6 depicts a waveform 670 that includes multiple pulses 672, 674, 676, 678, 682, and 684 that may not overlap in the time or the frequency domain. In an embodiment each pulse 672, 674, 676, 678, 682, and 684 may have a pulse width T3, and frequency spectrum width F1 and period P3. The pulse 672 is frequency offset from the pulse 674, the pulse 676 is frequency offset from the pulse 678, and the pulse 682 is frequency offset from the pulse 684. The pulses 672, 674, 676, 678, 682, and 684 may be applied to an LED module to affect dermalogical cells or chemicals 22A and the pins 230, 351, 451. Pulses 672, 674 having different frequency spectrums may enable different LED stimulation. In an embodiment the pulses 672, 676, 682 may be applied to a first LED module and the pulses 674, 678, 684 may be applied to a second LED module. The frequency separation between the respective pulses may enable simultaneous energization of a first and a second LED module and the pins 230, 351, 451 and subsequent and independent spectrum generation.

[0053] In an embodiment the invention may employ the algorithm 740 shown in FIG. 7A to apply therapy to dermalogical cells. A user, clinician, or equipment may place an apparatus 10, 320, 360, 360, 400, 460 on dermalogical cells to be treated (activity 741) including pressing the apparatus against the cells firmly enough to embed one or more pins 251, 351, 451 in the cells. A first signal such as shown in FIGS. 5A, 5B, and 6 may be applied to a first LED module or group

(32A) and the pins 230, 351, 451 of a dermalogical apparatus 10, 320, 360, 360, 400, 460 (activity 742) for a predetermined time period (activity 744). A second signal such as shown in FIGS. 5A, 5B, and 6 may be applied to a second LED module or group (32B) and the pins 230, 351, 451 of a dermalogical apparatus 10, 320, 360, 360, 400, 460 (activity 746) for a predetermined time period (activity 748). The signals applied to the groups may be selected to stimulate dermalogical cells or chemicals 22A or cause vibration of one or more pins 251, 351, 451.

[0054] In another embodiment the invention may employ the algorithm 750 shown in FIG. 7B to apply therapy to dermalogical cells. A user, clinician, or equipment may apply a light sensitive chemical on an apparatus 10, 320, 360, 360, 400, 460 or on dermalogical cells to be treated (activity 751). The user, clinician, or equipment may place apparatus 10, 320, 360, 360, 400, 460 on dermalogical cells to be treated (activity 752). A signal such as shown in FIGS. 5A, 5B, and 6 may be applied to a LED module or group (32A or 32B) and the pins 230, 351, 451 (activity 354) for a predetermined time period (activity 356).

[0055] In another embodiment the invention may employ the algorithm 760 shown in FIG. 7C to apply therapy to dermalogical cells. A user, clinician, or equipment may apply a light sensitive chemical on an apparatus 10, 320, 360, 360, 400, 460 or on dermalogical cells to be treated (activity 761). The user, clinician, or equipment may place an apparatus 10, 320, 360, 360, 400, 460 on dermalogical cells to be treated (activity 762). A first signal such as shown in FIGS. 5A, 5B, and 6 may be applied to a first LED module or group (32A) and one or more pins 251, 351, 451 of a dermalogical apparatus 10, 320, 360, 360, 400, 460 (activity 763) for a predetermined time period (activity 764). A second signal such as shown in FIGS. 5A, 5B, and 6 may be applied to a second LED module or group (32B) and one or more pins 251, 351, 451 of a dermalogical apparatus 10, 320, 360, 360, 400, 460 (activity 766) for a predetermined time period (activity 768).

[0056] The apparatus 10, 320, 360, 360, 400, 460 may be used to employ cosmetic or medications or other chemicals directly on dermalogical cells such as skin with the addition of light of specific frequencies for treatment and healing of epidermal cells of the skin or tissue below the skin with the object of assisting the agents used in delivery, uptake, action and function more effectively. The LEDs 32A, 32B may create the specific frequencies of light. The apparatus 10, 320, 360, 360, 400, 460, light application may enable cosmetic or medication or other active chemicals 22A on dermalogical cells for longer time periods while preventing dehydration of the

applied substances. Such light application may improve the efficacy of cosmetic or medication or other active chemical as a function of the selected wavelengths or frequencies.

[0057] Further the dermalogical system application may increase cellular activity and help heal tissue faster and facilitate the delivery, uptake and use in the cell of the cosmetics, medications, or chemicals 22A used. The LED light of specific frequencies may increase fibroblast production and collagen as well as other activities of the cell including stimulating the organelles and mitochondria to produce ATP for cell energy for functioning, decreasing treatment time and facilitate healing. The apparatus 10, 320, 360, 360, 400, 460 make the agents used on the body more efficacious and useful to the body on a cellular level.

[0058] The apparatus 10, 320, 360, 360, 400, 460 may stimulate the basic energy processes in the mitochondria (energy compartments) of each cell, particularly when near-infrared light is used to activate the color sensitive chemicals (chromophores, cytochrome systems) inside but not limited to these spectrum alone as the UV, other visible and IR spectrums may also be usable. In an embodiment optimal LED wavelengths for skin repair may include 640, 680, 730 nanometers (nm) wavelengths to IR 880 nm. Further application of blue light 400 nm to 490 via the apparatus 10, 320, 360, 360, 400, 460 may inhibit the growth and kill bacteria, fungus in and on dermalogical cells. The apparatus 10, 320, 360, 360, 400, 460 may be employed to apply cosmetics, medications and/or other actives directly to the skin and maintain their presence long-term while using LED or other actinic light to increase their effect on the cells and tissue in the body. The apparatus 10, 320, 360, 360, 400, 460 are also highly portability and enable user mobility during treatment.

[0059] Chemicals 22A may include cosmetics, medications and other actives appropriate for dermalogical cells including AHA's (alpha hydroxy acid), natural oils, aloe vera compounds, collagen boosters, bt, chitosan, daeses, endorphins, photodynamic drugs (PDT) like (Photofrin or ALA), vitamins A, C E or others, kojic acid, retinols or other exfoliant, salicylic acid, anti oxidants or other youth boosters and anti aging cosmetic or medications, antiseptic, antibiotics, anti-cancer agents, aroma therapy agents, fruit and vegetable extracts, anti-inflammatory agents, pain relievers, hormones, depilatories, and others, but the scope of this invention is not limited to these alone but can include any helpful medication, herbal formula or active compound for the skin and/or other tissues.

[0060] FIG. 8 is a block diagram of an article 780 according to various embodiments. The article 780 shown in FIG. 8 may be used in various embodiments as a part of apparatus 10, 320,

360, 360, 400, 460 where the article 780 may be any computing device including a personal data assistant, cellular telephone, laptop computer, or desktop computer. The article 780 may include a central processing unit (CPU) 782, a random access memory (RAM) 784, a read only memory (ROM") 806, a display 788, a user input device 812, a transceiver application specific integrated circuit (ASIC) 816, a digital to analog (D/A) and analog to digital (A/D) convertor 815, a microphone 808, a speaker 802, and an antenna 804. The CPU 782 may include an OS module 814 and an application module 813. The RAM 784 may include switches 56 and timers 58.

[0061] The ROM 806 is coupled to the CPU 782 and may store the program instructions to be executed by the CPU 782. The RAM 784 is coupled to the CPU 782 and may store temporary program data, overhead information, and the queues 798. The user input device 812 may comprise an input device such as a keypad, touch pad screen, track ball or other similar input device that allows the user to navigate through menus in order to operate the article 780. The display 788 may be an output device such as a CRT, LCD, LED or other lighting apparatus that enables the user to read, view, or hear user detectable signals.

[0062] The microphone 808 and speaker 802 may be incorporated into the device 780. The microphone 808 and speaker 802 may also be separated from the device 780. Received data may be transmitted to the CPU 782 via a bus 796 where the data may include signals for an LED 32A, 32B, 332 or optical module or wires 331, 458. The transceiver ASIC 816 may include an instruction set necessary to communicate data, screens, or signals. The ASIC 816 may be coupled to the antenna 804 to communicate wireless messages, pages, and signal information within the signal. When a message is received by the transceiver ASIC 816, its corresponding data may be transferred to the CPU 782 via the serial bus 796. The data can include wireless protocol, overhead information, and data to be processed by the device 780 in accordance with the methods described herein.

[0063] The D/A and A/D convertor 815 may be coupled to one or more optical modules to generate a signal to be used to energize one of the optical modules. The D/A and A/D convertor 815 may also be coupled to one devices such as LEDs 32A, 32B and the pins 251, 351, 451. Any of the components previously described can be implemented in a number of ways, including embodiments in software. Any of the components previously described can be implemented in a number of ways, including embodiments in software. Thus, the LEDs 32A, 32B, pins 251, 351, 451, controllers 54, switch 56, timers 58, controller 320 may all be characterized as "modules" herein. The modules may include hardware circuitry, single or multi-processor circuits, memory circuits, software

program modules and objects, firmware, and combinations thereof, as desired by the architect of the system 10, 30, 50, 60 and as appropriate for particular implementations of various embodiments.

[0064] FIG. 9A is a simplified block diagram of a dermalogical treatment architecture (DTA) 900 according to various embodiments. As shown in FIG. 9A, architecture 900 includes a signal generation and control module (SGC) 910, a handle module 920, and an actuator module 930. In an embodiment the handle module 920 may include a deployable needle module 924 and a motor and LED module 922. In an embodiment the deployable needle module 924 may be releasably coupled to the motor and LED module 922. In a further embodiment the deployable needle module 924 may be a disposable cartridge module 924 to be removed and disposed after one or more treatments or for each patient, client, or user.

[0065] The SGC 910 may include one or more displays 912A, user input device 912B, handle module interface 914A, and actuator module interface 914C, electrical energy storage module 913, and one or more wheels 916A, 916B. In an embodiment the SGC 910 may be moveable and the wheels 916A, 916B may be lockable to prevent unintentional movement of the SGC 910 once positioned where desired by a user. In another embodiment the SGC 910 may also be coupled to the external power source including an alternating current (AC) grid source.

[0066] In an embodiment the displays 912A may indicate operational parameters for a hand module 920 to be coupled or coupled to the SGC 910. The displays 920 may be touch sensitive so a user may configure one or more operational parameters. In an embodiment the operational parameters may include electrical energy signal intensity to be applied the hand module 920, timing of such energy application, needle deployment timing and depth(s), LED intensity and timing, and number of cycles or shots to be conducted for each actuation via the actuator 930. In an embodiment the actuator 930 may be integral to the SGC 910 or a separate device wireless coupled or wired to the SGC 910 via a cable 914D and the SGC 910 actuator module interface 914C.

[0067] In an embodiment the actuator 930 may a mechanical device including a foot actuator or hand based actuator. The actuator 930 may also be an electronic device having an ASIC or running an application on a device (such as a computer, laptop, PDA, cellphone, or other electronic device) such as the module 780 shown in FIG. 8. In an embodiment the application may enable a user to set or control any of the possible operational parameters of the SGC 910 and initiate actuation a device 920 coupled to the SGC 910. FIG. 9B is a block diagram of a CPU module 911 that may be employed in the SGC 910 according to various embodiments.

[0068] The CPU module 911 may include a radio frequency (RF) signal generator (RFSG) module 911A, a needle deployment motor controller (NDMC) module 911B, and a photonic signal generator module (PSG) 911C. In an embodiment the photonic signal generator module 911C may be an LED signal generator or controller module 911C. In an embodiment a hand module 920 may include one or more photonic generation devices or modules (922I in FIG. 10A, 10B) where the PSG 911C may generate control or energy signals that cause the photonic modules 922I to generate photons of one or more frequencies with a desired intensity.

[0069] The NDMC 911B may control the deployment of one or more needles 924A of a deployable needle module 924 (FIG. 9C) based on one or more user selected operational parameters. The parameters may determine the depth and duty cycle related to the needle(s) 924A deployment in an embodiment. The signals generated by the NDMC 911B to control needle deployment may vary as a function of motor(s) (922A, FIG. 9C) employed to drive one or more needles 924A. As described above an electrical signal may also be applied to the needle(s) 924A to cause vibration of the needles or enable cutting and coagulation of the tissue in which the needles 924A are deployed. The RFSG 911A may generate one or more electrical signals to be applied to one or more needles 924A based on the selected operational parameters. An electrical signal may be applied to a single needle 924A, group of needles 924A (mono-polar configuration) or pair(s) of needles 924A (bipolar configuration) in an embodiment. In an embodiment the RFSG 911A may apply signals 650, 630, 640, 670 shown in FIGs. 5A, 5B, and 6, a combination thereof, or other signals.

[0070] In an embodiment the CPU module 911 via the RFSG 911A, NDMC 911B, and PSG 911C may create various therapy solutions including various combinations of photonic, electrical, and mechanical (needle deployment) therapy. In a further embodiment the CPU module 911 may control the generation of photonic energy to particular modules 922I, individual or group of needle(s) 924A deployment via one or more motors 922A, and control electrical signal(s) applied to individual or group of needles 924A. Accordingly the DTA 900 may apply various therapies based on user selections via the displays 912A, user selection device 912B, and actuator 930. The CPU 911 may employ the algorithm 930 (FIG. 12) or variations thereof to control the operation of the DTA 900.

[0071] FIG. 9C is a simplified cross-sectional diagram of a cartridge based dermalogical treatment apparatus or hand module 920 with one or more needles 924A retracted according to

various embodiments. FIG. 9D is a simplified cross-sectional diagram of a cartridge based dermalogical treatment apparatus or hand module 920 with one or more needles 924A deployed according to various embodiments. The handle module 920 may include a deployable needle module (DNM) 924 and a motor and LED module (MLM) 922. In an embodiment the DLM 924 may be a releasably couplable cartridge module. In a further embodiment the DLM 924 may be a detachable cartridge module (DCM) 924 where the DCM may be changed between therapy application(s) or client(s). In a further embodiment, the DCM 924 may be disposed after usage or cleaned via an autoclave or chemical process.

[0072] As shown in FIGs. 9C and 9D, the MLM 922 may include one or more motors 922A, longitudinally extendable drive arms 922B, drive shaft 922C, outer casing 922D, signal interface 922E, photonic generator module 922H, and DCM 924 interface 925 (shown in FIGs. 10A to 10F). The motor(s) 922A and photonic generator module 922H may be electrically coupled to the signal interface 922E to received control signals and energy to operate one or more motors 922A and photonic devices or modules 922I of the photonic generator module 922H. The drive arm(s) 922B may be coupled to one or more drive shafts 922C so the drive shafts may be moved longitudinally to deploy and retract one or more needles 924A when the MLM 922 is operatively coupled to the DNM 924.

[0073] As shown in FIGs. 9C and 9D the deployable needle module 924 may include at least one deployable needle 924A, MLM connecting arm and drive coupling tabs 924B, and MLM connecting/locking arms 924C. The MLM connecting/locking arms 924C may be configured to engage and lock to DCM 924 interface 925 recesses 925D (FIG. 10F). The MLM connecting arm and drive coupling tabs 924B may be configured to disengage connecting/locking arms 924C from the MLM interface 925 when the tabs 924B are depressed inward in an embodiment (as shown in FIG. 10B). The tabs 924B may further displace drive shaft connecting arms 924D inward or centrally when the tabs 924B are depressed inwardly (as also shown in FIG. 10B). When the connecting/locking arms 924C are depressed inwardly or centrally (FIG. 9C and 9D) from an outward position (FIG. 10B). The arms 924C may engage the interface 925 recesses 925D to securely hold the DNM 924 to the MLM 922. The arms 924C may also displace the tabs 924B outwardly and cause the drive shaft connecting arms 924D to return outwardly.

[0074] The drive shaft connecting arms 924D may securely engage the drive shaft 922C tip 922F (FIG. 10E) recess 922G (FIG. 10E) when they return to an outward position as shown in FIG.

10D and 10E. In this configuration the DNM 924 is securely coupled to the MLM 922 via the arms 924C and 924D. In this configuration the motor(s) 922A via drive shaft(s) 922C coupled to the motor 922A shaft 922B may reliably drive one or more needles 924A of the DNM 924 (from a retracted or deployed position such as shown in FIGs. 9C and 9D, respectively). Further the motor(s) 922A may include steps or infinite drive extension 922B control to enable precise needle deployment depth or extension beyond the DNM 924 shell (924E, Fig. 10A).

[0075] FIG. 10A-10D are simplified, partial, cross-sectional diagrams of the DNM 924 in various stages of attachment to the MLM 922 via the arms 924C and 924D according to various embodiments. As shown in FIG. 10A the DNM or DCM 924 is decoupled from the MLM 922. The MLM 922 includes the photonic generator module (PGM) 922H, interface 925, and drive shaft tip 922F in a distal portion. As shown in FIG. 10A the PGM 922H may include one or more photon modules 922I. The photon modules 922I may be LED modules and emit photon with various frequencies and intensities based on the PSG 911C control signal.

[0076] As shown in FIG. 10A the DNM or DCM 924 may include the connecting arms 924C, deflecting tabs 924B, drive shaft coupling arms 924D, outer shell 924E, and one or more needles 924A. In an embodiment the drive shaft coupling arms 924D may include tabs that may securely engage the drive shaft tip 922F recess 922G. The drive shaft coupling arms 924D may be returnably deflectable inwardly (as shown in FIG. 10B) via inward depression of the tabs 924B. Such inward depression of the tabs 924B may deflect the coupling arms 924C outward. Similarly, inward depression of the coupling arms 924C to engage the interface 925 recesses 925D securely may deflect the tab arms 924B outwardly (relative the central axis of the DNM 920). Such outward movement may enable the drive shaft coupling arms 924D to return to a non-deflected state as shown in FIG. 10A.

[0077] In an embodiment a DNM or DCM 924 may be securely coupled to a MLM 922 by first completely compressing the arms or tabs 924B as shown in FIG. 10B. As noted above such inward compression may cause the coupling arms 924C to deflect outwardly and the drive shaft coupling arms 924D to be deflected inwardly towards each other. The drive shaft coupling arms 924D may be compressed so they may fit within the drive shaft 922C tip 922F recess 922G as the DNM or DCM 924 is advanced toward the MLM 922 distal end to securely couple the DNM 924 to the MLM 922 (as shown in FIG. 10D). After the DNM or DCM 924 is placed over the MLM 922 distal end so the drive shaft coupling arms 924D are located within the drive shaft 922C tip 922F

recess 922G and the coupling arms 924C are adjacent the MLM 922 interface 925 recesses 925D as shown in FIG. 10C.

[0078] To complete the coupling of a DNM 924 to the MLM 922, the coupling arms 924C may compressed inwardly as shown in FIG. 10D. The compression of the coupling arms 924C may deflect the tabs or arms 924B outwardly. Such outward deflection of the arms 924B may enable the drive shaft coupling arms 924D to return to a non-deflected state and securely engage the MLM 922 drive shaft 922C tip 922F recess 922G (as shown in FIG. 10D). In an embodiment a single coupling arm 924C, drive shaft coupling arm 924D, and tab 924B may be employed in an DNM 924. After the secure coupling of the DNM 924 to the MLM 922, the MLM 922 via the motor(s) 922A may controllable deploy one or more needles 924A as shown in FIG. 10E. FIG. 10F is a simplified cross-sectional diagram of a DNM interface 925 according to various embodiments.

[0079] As noted the interface 925 may include one or more recesses 925D to be securely engaged to DNM 924 coupling arms 924C. The interface 925 may also include several fenestrations or openings 925A, 925B, 925C. The central fenestration 925A may be sized to enable passage of the MLM 922 drive shaft 922C tip 922F. The fenestrations 925C may be sized and located above one or more photon modules 922I to enable photons generated by the photon modules 922I to pass into the DNM 924. In an embodiment the DNM 924 outer casing 924E may be translucent and act as a waveguide to communicate photons to the needle area of the DNM 924. The fenestrations 925B may be sized and configured to enable electrical coupling pins 924G (FIG. 11A) passage from the DNM 924 to electrical couplings of the MLM 922. The pins 924G may communicate electrical signals from the RFSG 911A to one or more needles 924A via the wires 914B and MLM 922.

[0080] FIG. 11A is a simplified, partial, cross-sectional diagram of DNM 924 coupled to a MLM 922 with needles 924A deployed according to various embodiments. As shown in FIG. 11A, the DNM 924 may further include electrical coupling pins 924G set with a spring loaded base 924H (in an embodiment). As noted the pins 924G may extend to electrical contacts in the MLM 922 via the interface 925 fenestrations 925B. Along a pair of pins 924G is shown, one or more pins 924G may be employed in a DNM 924 according to various embodiments. A drive shaft coupling arm 924D may include an offset 924I where the offset may be configured to engage a tab or arm 924B.

[0081] As shown in FIG. 11A when the needle array or assemble 924F is deployed depression of the tabs 924B inwardly will not engage the drive shaft coupling arms 924D (via the offsets 924I). Such a configuration may prevent unintentional decoupling of the DNM 924 to the

MLM 922 when the needle assembly 924F is at least partially deployed. As shown in FIG. 11A, the electrical contact pin 924G is sized to fit within the spring loaded based 924H. In an embodiment the internal spring 924M is may force extension of the pin 924G to maintain electrical conduction with the MLM 922 as the needle assembly 924F is moved (recessed and deployed to various depths). FIG. 11B is a simplified, cross-sectional diagram of a DNM 924 needle assembly 924F according to various embodiments. FIG. 11C is a simplified, cross-sectional, exploded diagram of the DNM 924 needle assembly 924F according to various embodiments. As shown in FIGs. 11B and 11C, the needle assembly 924F may include a pin cover 924J, drive arm module 924L, needles 924A, pins 924G with bases 924H, and needle printed circuit board (PCB) 924K.

[0082] In an embodiment the PCB 924K may couple one or more needles 924A to a first pin 924G base 924H and another one or more needles 924A to another pin 924G based 924H. The first pin 924G and second pin 924H may couple alternating rows or columns of needles 924A to form one or more dipoles between such needles 924A. The drive shaft coupling arms 924D may have a base 924L where the cover 924J includes fenestrations for the needles 924A, a recess for the PCB 924K, and an outer recess for the coupling arm base 924L (as shown assembled in FIG. 11B).

[0083] FIG. 12 is a flow diagram illustrating a DTA 900 processing algorithms 930 according to various embodiments. As noted the DTA 900 SGC 911 RFSG 911A, NDMC 911B, and PSG 911C may enable a user or clinician to select a variety of operational parameters to deliver a desired combination of electrical, light (photonic), and mechanical (needle) therapy to dermalogical tissue. In the algorithm 930, a user may select different operational modes including cut (activities 932A to 932F), blend (activities 934A to 934F), and coagulation (activities 936A to 936F) in an embodiment. In a cut operational mode, a user may select the electrical signal intensity (activity 932B) and application time (activity 932C). The CPU 911 may determine the total energy that will be applied for each activation based on the selected intensity and time (total fluence – activity 932D). Then, upon activation (activity 932E, 932F) the DTA 900 may energize the MLM 922 based on the operational parameters.

[0084] In a blend operational mode (activity 934A), a user may select the electrical signal intensity, start delay, and duty cycle (activity 934B) and needle deployment depth and number of shots per activation (activity 934C). The duty cycle may include the delay before energy and need deployment, the time the energy and needles are deployed, and the subsequent off or rest time before the next possible duty cycle. As noted above the motor(s) 922A may enable precise needle

extension (effective depth) control. In an embodiment the motor(s) 922A may include a transverse motor that converts rotational force to longitudinal force. The motor may be a Haydon model number: 21H4AB-05-049 having a motor speed of about 0.005mm/msec and motor power of about 1000 Hz approximately 40N (Newton) (described in detail at www.haydonkerk.com and whose specifications are incorporated by reference).

[0085] The CPU 911 may determine the total energy that will be applied for each activation based on the selected intensity and duty cycle (total fluence – activity 934D). Then, upon activation (activity 934E, 934F) the DTA 900 may energize the MLM 922 based on the operational parameters and deploy the needle assembly 924F to a desired extension beyond the DNM 924 shell 924E to enable a desired depth of needle 924A penetration within tissue when the shell 924E is placed adjacent the tissue.

[0086] In a coagulation operational mode (activity 936A), a user may select the electrical signal intensity and start delay (activity 936B) and needle deployment depth and number of shots per activation (activity 936C). As noted above the motor(s) 922A may enable precise needle extension (effective depth) control. The CPU 911 may determine the total energy that will be applied for each activation based on the selected intensity (total fluence – activity 936D). Then, upon activation (activity 936E, 936F) the DTA 900 may energize the MLM 922 based on the operational parameters and deploy the needle assembly 924F to a desired extension beyond the DNM 924 shell 924E to enable a desired depth of needle 924A penetration within tissue when the shell 924E is placed adjacent the tissue.

[0087] Applications that may include the novel apparatus and systems of various embodiments include electronic circuitry used in high-speed computers, communication and signal processing circuitry, modems, single or multi-processor modules, single or multiple embedded processors, data switches, and application-specific modules, including multilayer, multi-chip modules. Such apparatus and systems may further be included as sub-components within a variety of electronic systems, such as televisions, cellular telephones, personal computers (e.g., laptop computers, desktop computers, handheld computers, tablet computers, etc.), workstations, radios, video players, audio players (e.g., mp3 players), vehicles, medical devices (e.g., heart monitor, blood pressure monitor, etc.) and others. Some embodiments may include a number of methods.

[0088] It may be possible to execute the activities described herein in an order other than the order described. Various activities described with respect to the methods identified herein can be executed in repetitive, serial, or parallel fashion.

[0089] A software program may be launched from a computer-readable medium in a computer-based system to execute functions defined in the software program. Various programming languages may be employed to create software programs designed to implement and perform the methods disclosed herein. The programs may be structured in an object-orientated format using an object-oriented language such as Java or C++. Alternatively, the programs may be structured in a procedure-orientated format using a procedural language, such as assembly or C. The software components may communicate using a number of mechanisms well known to those skilled in the art, such as application program interfaces or inter-process communication techniques, including remote procedure calls. The teachings of various embodiments are not limited to any particular programming language or environment.

[0090] The accompanying drawings that form a part hereof show, by way of illustration and not of limitation, specific embodiments in which the subject matter may be practiced. The embodiments illustrated are described in sufficient detail to enable those skilled in the art to practice the teachings disclosed herein. Other embodiments may be utilized and derived therefrom, such that structural and logical substitutions and changes may be made without departing from the scope of this disclosure. This Detailed Description, therefore, is not to be taken in a limiting sense, and the scope of various embodiments is defined only by the appended claims, along with the full range of equivalents to which such claims are entitled.

[0091] Such embodiments of the inventive subject matter may be referred to herein individually or collectively by the term "invention" merely for convenience and without intending to voluntarily limit the scope of this application to any single invention or inventive concept, if more than one is in fact disclosed. Thus, although specific embodiments have been illustrated and described herein, any arrangement calculated to achieve the same purpose may be substituted for the specific embodiments shown. This disclosure is intended to cover any and all adaptations or variations of various embodiments. Combinations of the above embodiments, and other embodiments not specifically described herein, will be apparent to those of skill in the art upon reviewing the above description.

[0092] The Abstract of the Disclosure is provided to comply with 37 C.F.R. §1.72(b), requiring an abstract that will allow the reader to quickly ascertain the nature of the technical disclosure. It is submitted with the understanding that it will not be used to interpret or limit the scope or meaning of the claims. In the foregoing Detailed Description, various features are grouped together in a single embodiment for the purpose of streamlining the disclosure. This method of disclosure is not to be interpreted to require more features than are expressly recited in each claim. Rather, inventive subject matter may be found in less than all features of a single disclosed embodiment. Thus the following claims are hereby incorporated into the Detailed Description, with each claim standing on its own as a separate embodiment.

Claims

What is claimed is:

1. A method of treating dermalogical tissue, comprising:

placing a device including a distal end including a plurality of extendable needles from a device distal end surface on or near dermalogical tissue to be treated;

energizing a motor coupled to the extendable needles to cause at least one needle to extend a desired distance from the distal end surface; and

energizing the at least one needle via a signal generator electrically coupled to the at least one needle to cause vibration of the at least one needle.

2. The method of claim 1, further comprising placing a dermalogical chemical one of on at least a portion of the dermalogical tissue, at least a portion of the inner surface, and the at least one needle.

3. The method of claim 1, wherein the device further includes a proximal handle and a releasably couplable deployable needle assembly, the extendable needles located in the needle assembly.

4. The method of claim 3, wherein the proximal handle includes the needle deploying motor.

5. The method of claim 4, wherein the proximal handle further includes at least one embedded LED therein and further including energizing the LED when the signal generator is energized.

6. The method of claim 5, comprising energizing the LED to generate one of a blue and an infra-red photonic signal.

7. The method of claim 4, wherein the needle deploying motor is coupled the needle assembly via a drive shaft.

8. The method of claim 5, wherein the releasably couplable deployable needle assembly includes a translucent section to communicate the photon signal to the at least one needle.

9. The method of claim 3, further comprising employing an RF signal generator electrically coupled to the at least one needle to generate a signal that causes vibration of the at least one needle.

10. The method of claim 3, wherein tissue penetration by the at least one needle creates a micro-wound and further comprising employing an RF signal generator electrically coupled to the at least one needle to generate a signal that causes vibration of the at least one needle sufficient to increase the tissue micro-wound.

11. An apparatus for treating dermalogical tissue, comprising:

a device including a distal end and a plurality of extendable needles, at least one needle extendable from the device distal end surface;

a motor coupled to at least one needle that causes the at least one needle to extend a desired distance from the distal end surface when energized with a particular signal; and

a signal generator electrically coupled to the at least one needle to cause vibration of the at least one needle when the at least one needle energized with a particular signal.

12. The apparatus of claim 11, wherein the device includes a proximal end couplable to the signal generator.

13. The apparatus of claim 11, wherein the device further includes a proximal handle and a releasably couplable deployable needle assembly, the extendable needles located in the needle assembly.

14. The apparatus of claim 12, wherein the proximal handle includes the motor.

15. The apparatus of claim 14, wherein the proximal handle further includes at least one embedded LED therein and further including a photonic signal generator electrically coupled to the least one embedded LED.

16. The apparatus of claim 15, wherein the at least one embedded LED generates one of a blue and an infra-red photonic signal.

17. The apparatus of claim 14, further comprising a drive shaft coupling the motor to the at least one needle.

18. The apparatus of claim 15, wherein the releasably couplable deployable needle assembly includes a translucent section that communicates photon signals.

19. The apparatus of claim 13, further comprising an RF signal generator electrically coupled to the at least one needle, the RF signal generator causing vibration of the at least one needle when the needle is energized with a particular signal.

20. The apparatus of claim 13, wherein tissue penetration by the at least one needle creates a micro-wound and further comprising an RF signal generator electrically coupled to the at least one needle, the RF signal generator causing vibration of the at least one needle when the needle is energized with a particular signal sufficient to increase the tissue micro-wound.

METHOD, SYSTEM, AND APPARATUS FOR DERMALOGICAL TREATMENT

Abstract of the Disclosure

Embodiments of dermalogical cell treatment are described generally herein. Other embodiments may be described and claimed.

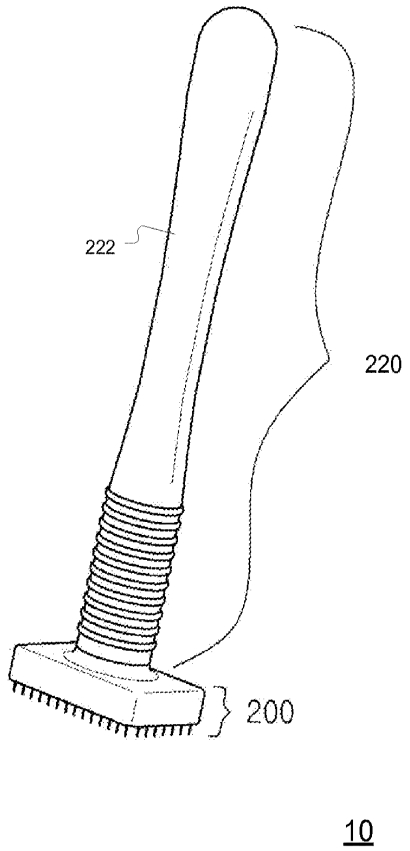

FIGURE 1A

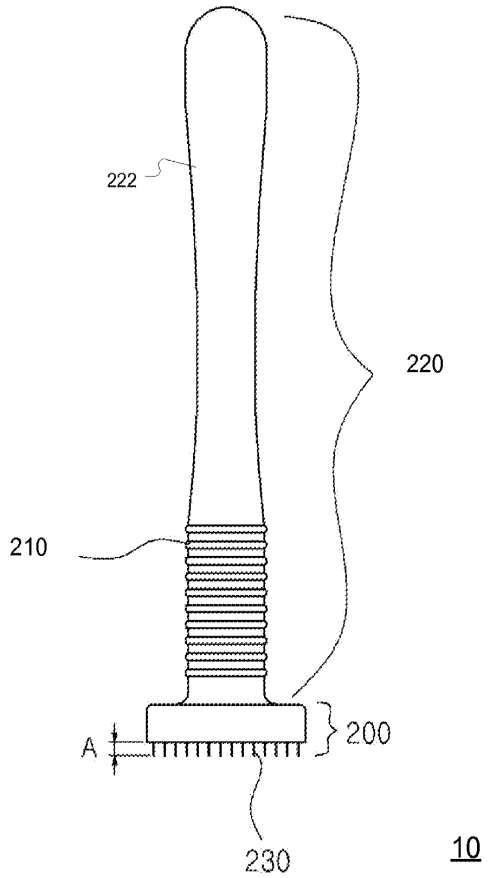

FIGURE 1B

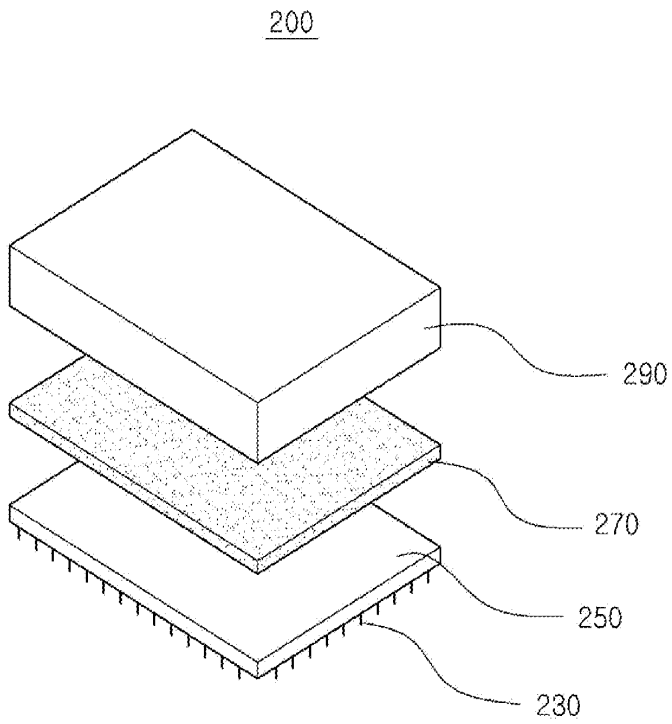

FIGURE 1C

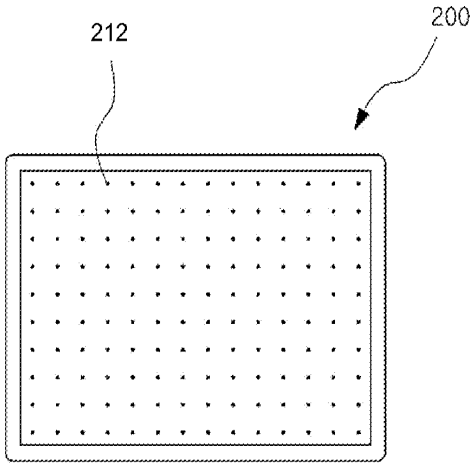

FIGURE 1D

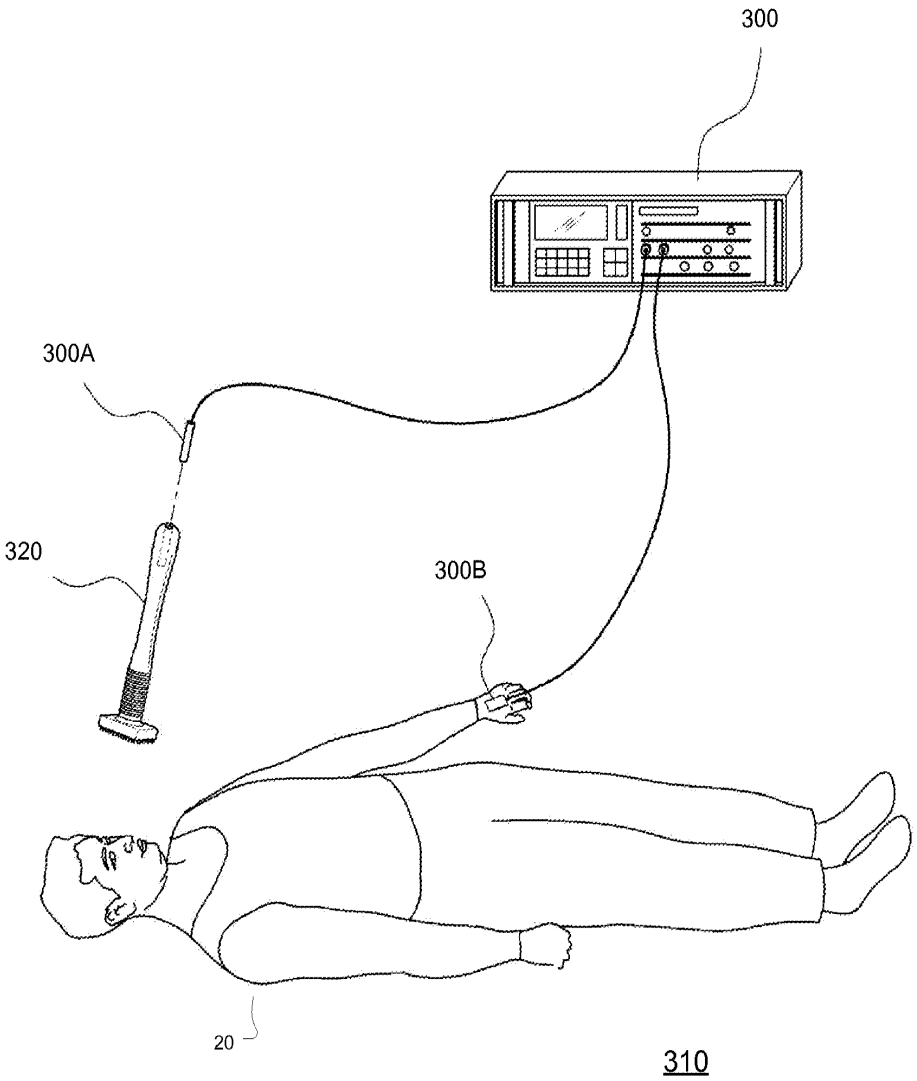

FIGURE 2A

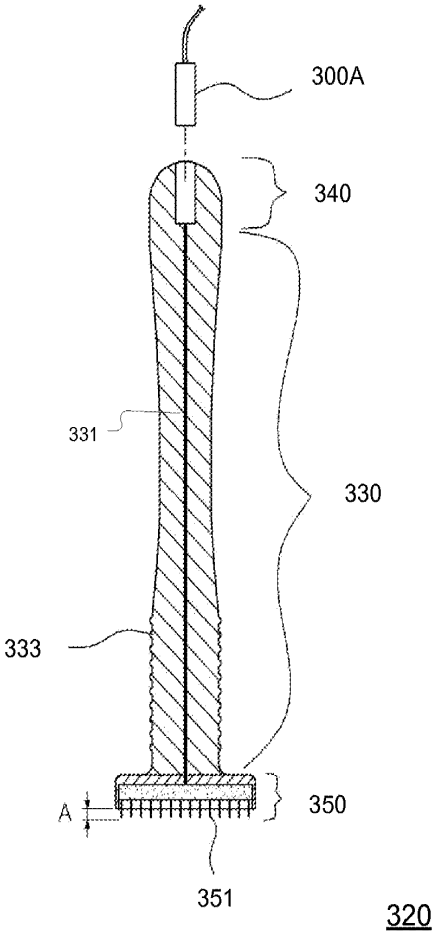

FIGURE 2B

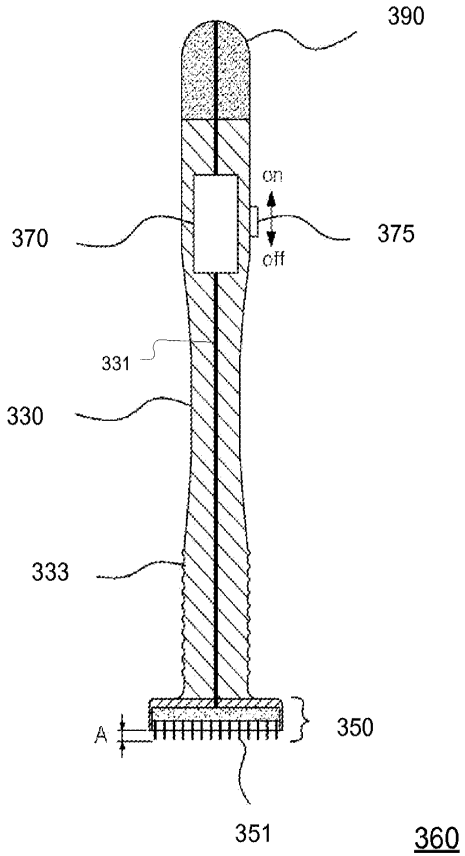

FIGURE 2C

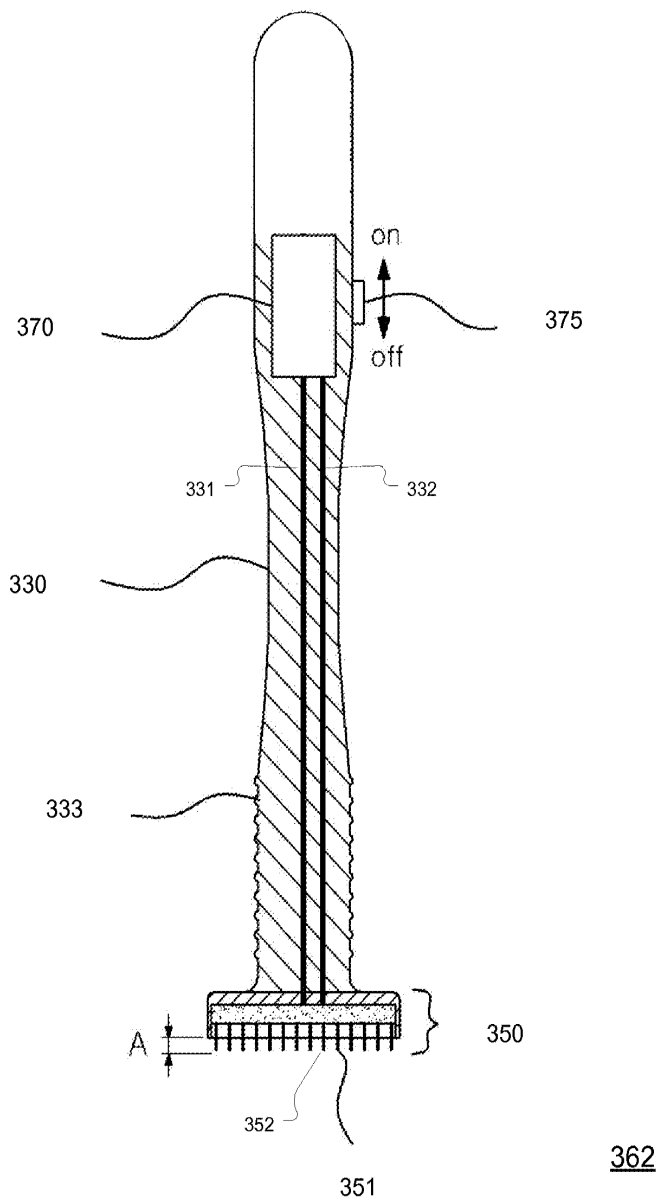

FIGURE 2D

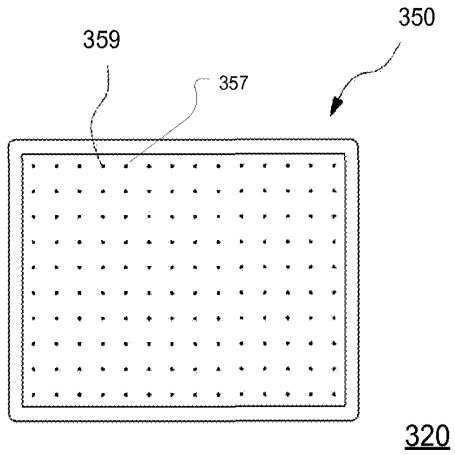

FIGURE 2E

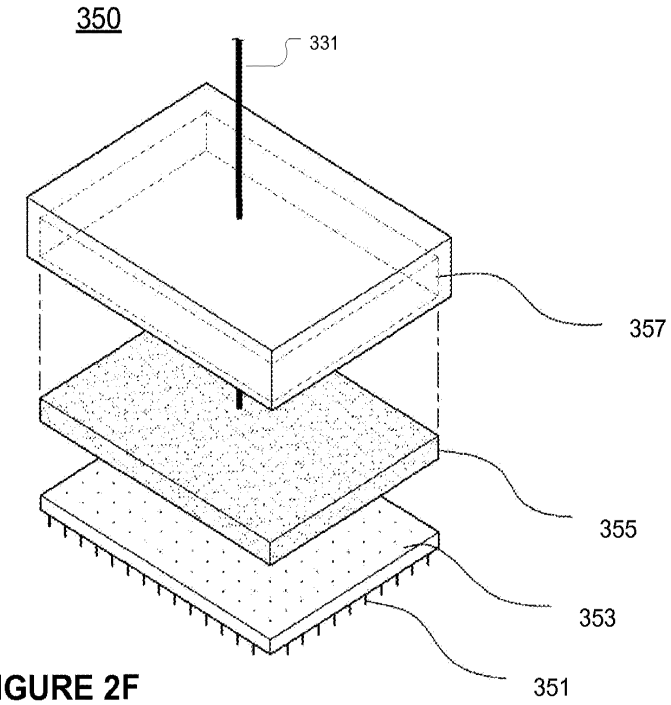

FIGURE 2F

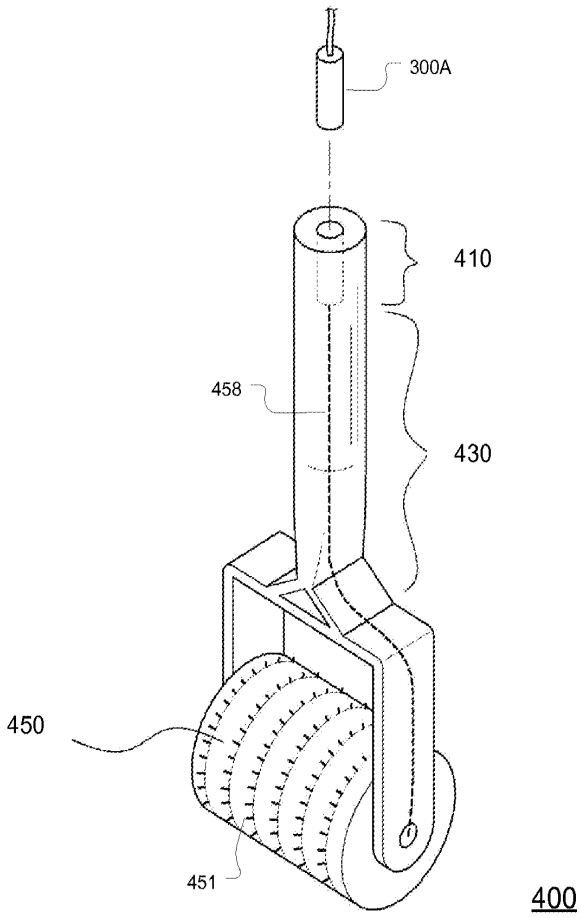

FIGURE 3A

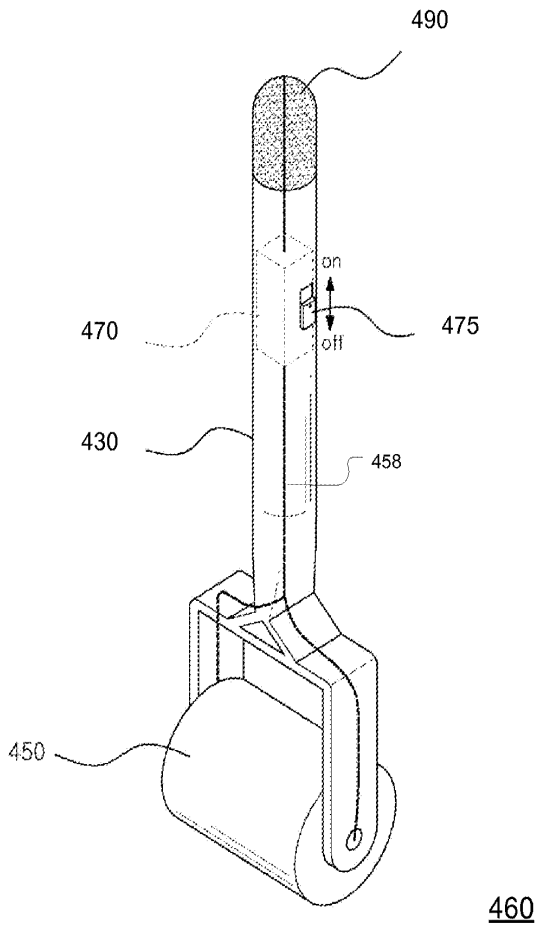

FIGURE 3B

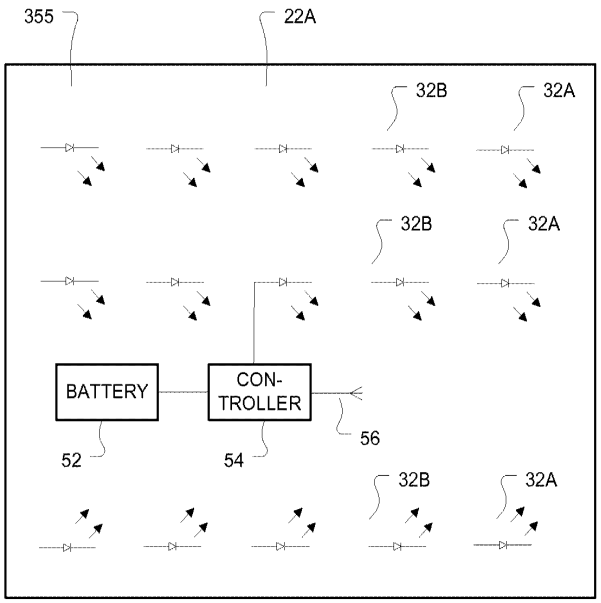

FIGURE 4A 520

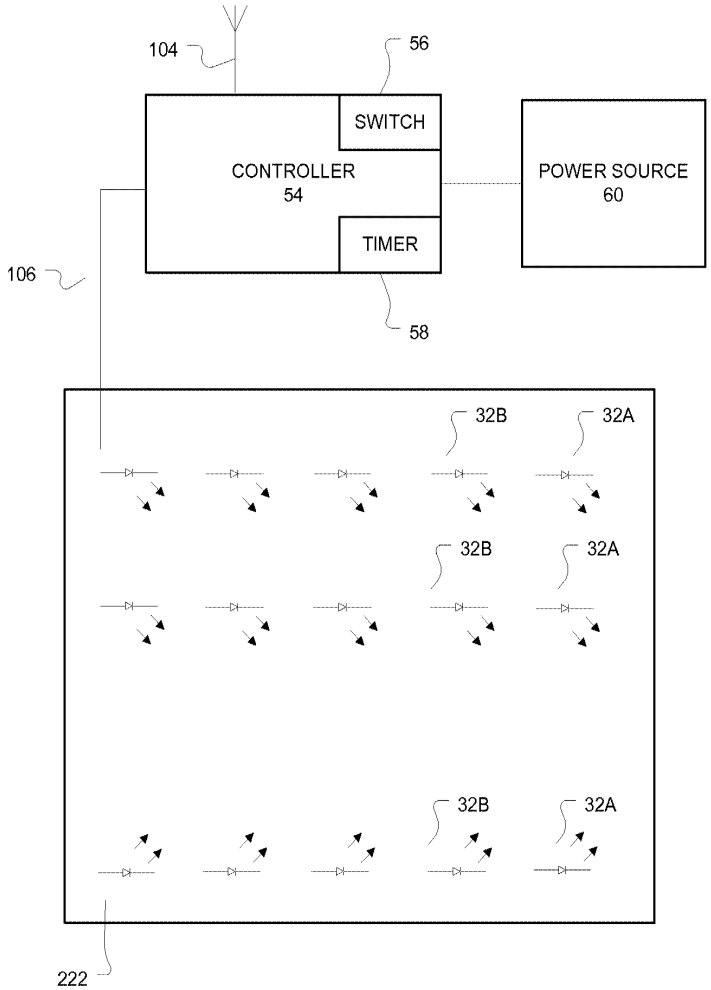

FIGURE 4B 510

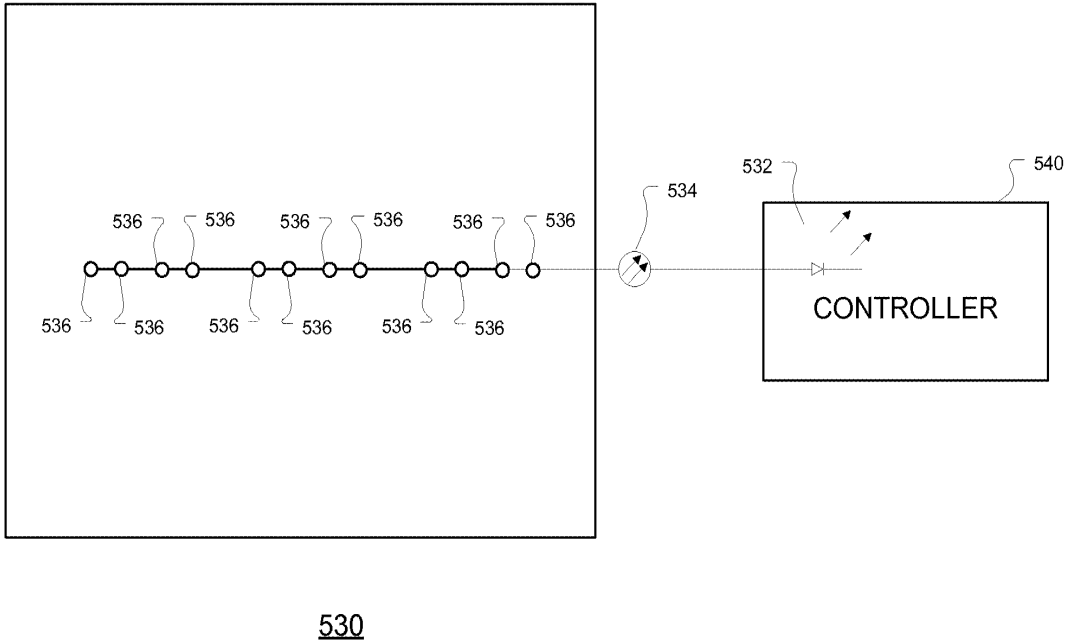
536
536
536
536
536
536
536
536
536
536
536
536
534
532
540
CONTROLLER
530

FIGURE 4C

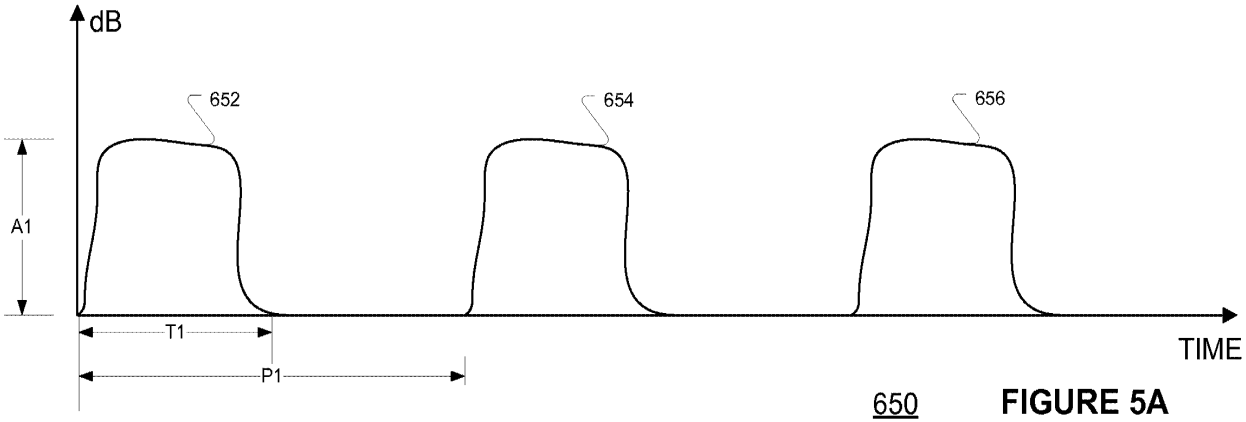

FIGURE 5A

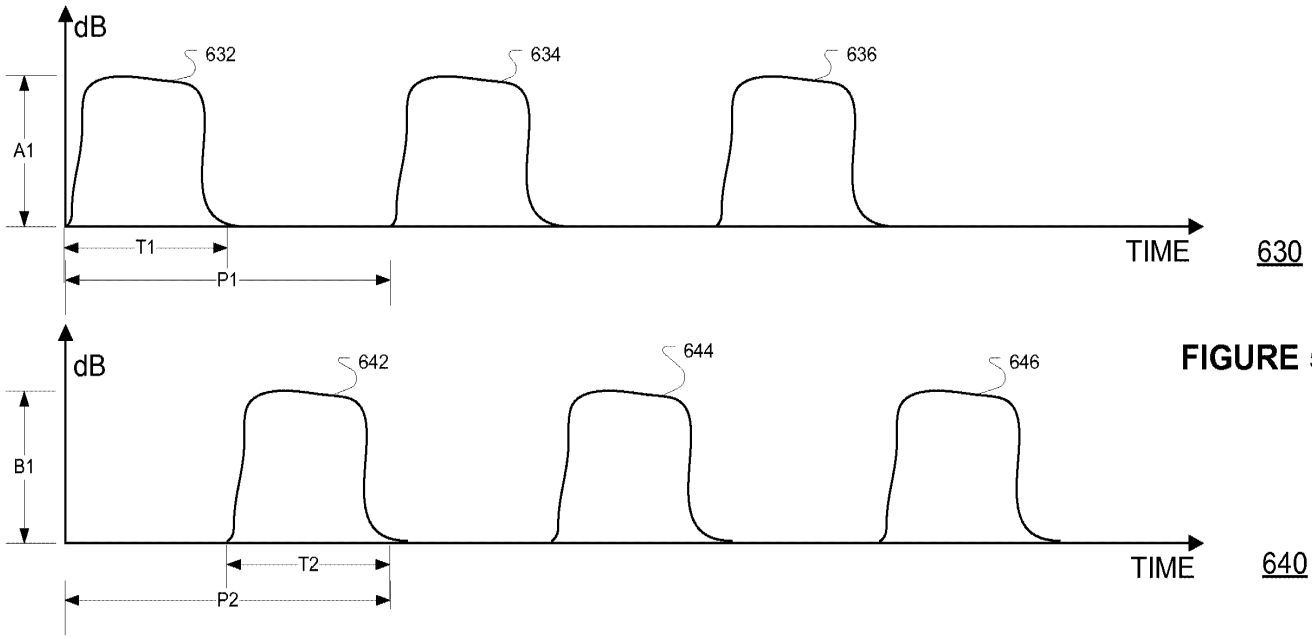

FIGURE 5B

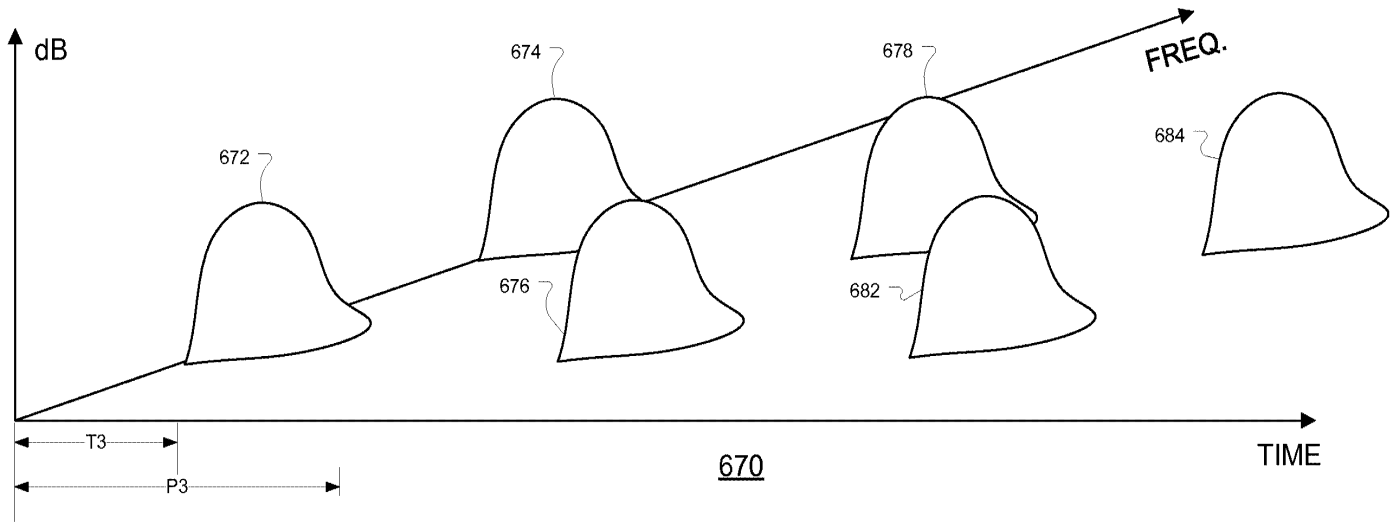

FIGURE 6

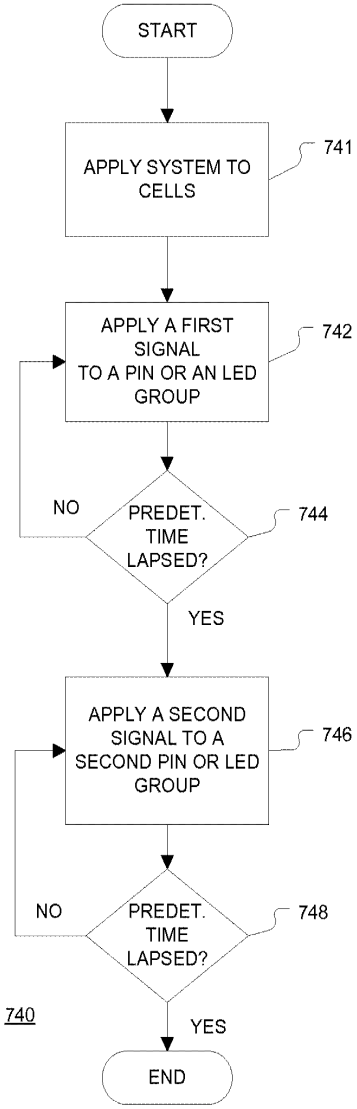

FIGURE 7A

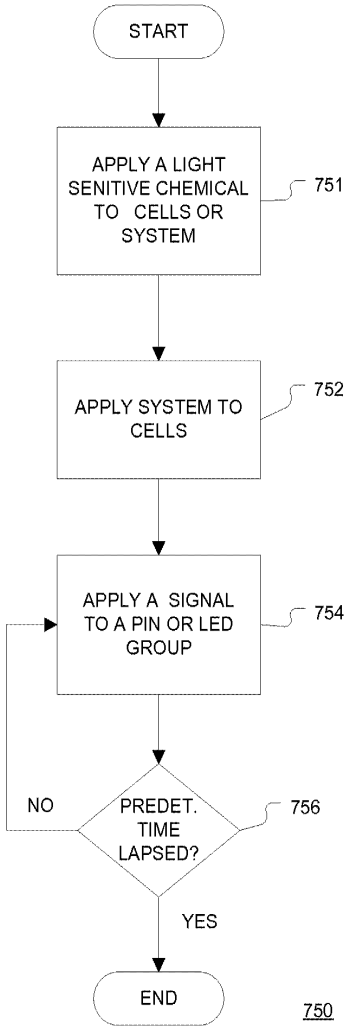

FIGURE 7B

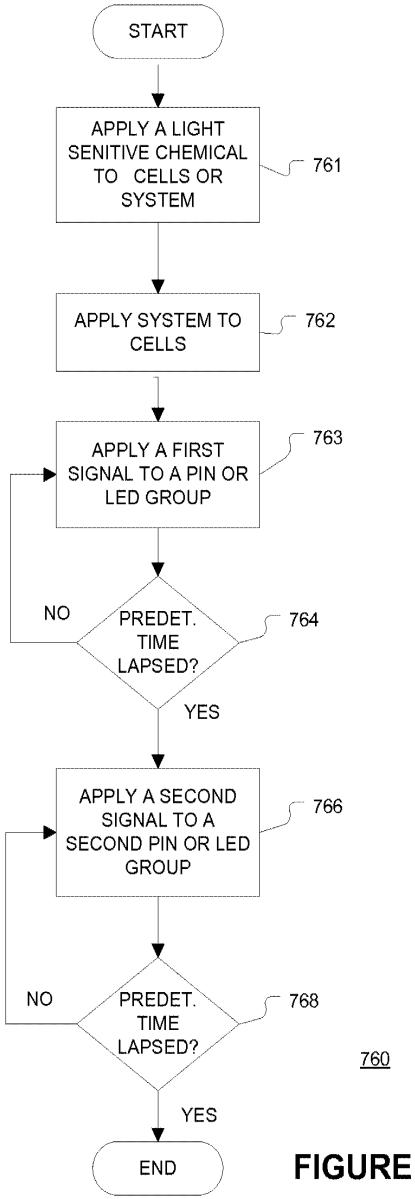

FIGURE 7C

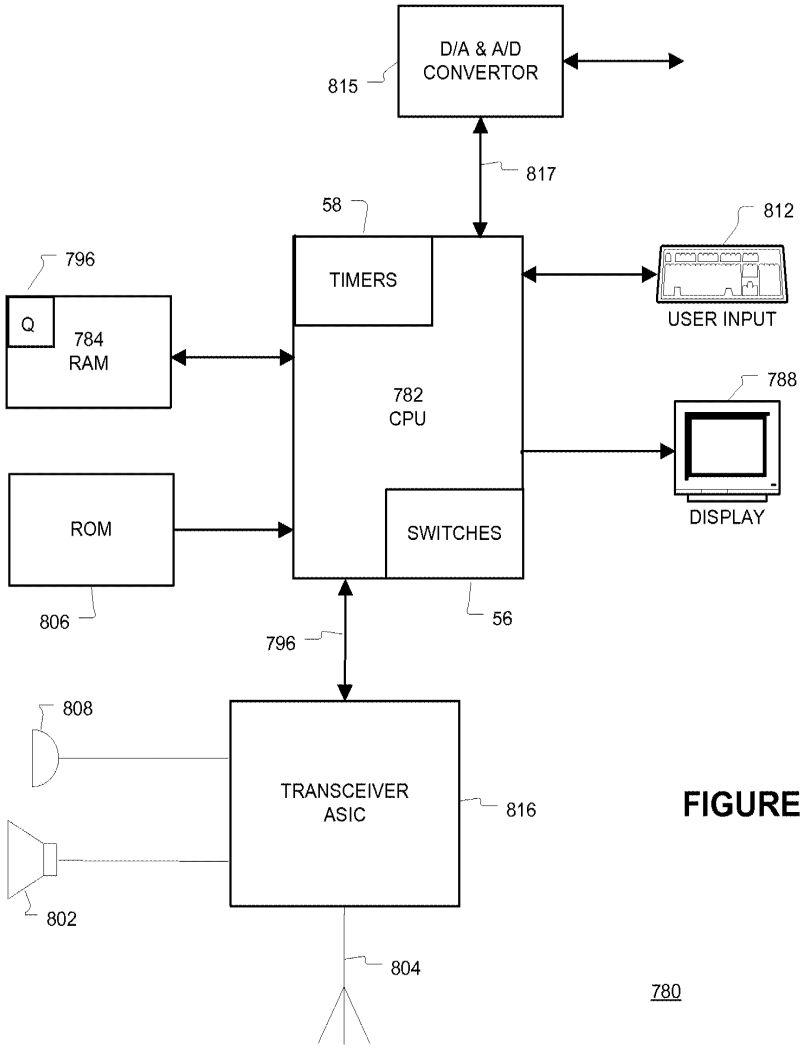
D/A & A/D
CONVERTOR
815
817
58
812
796
TIMERS
USER INPUT
Q
784
RAM
782
CPU
788
DISPLAY
ROM
SWITCHES
806
56
796
808
TRANSCEIVER
ASIC
816
802
804
780

FIGURE 8

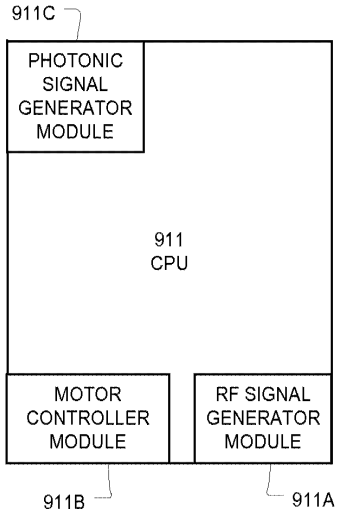

FIGURE 9B

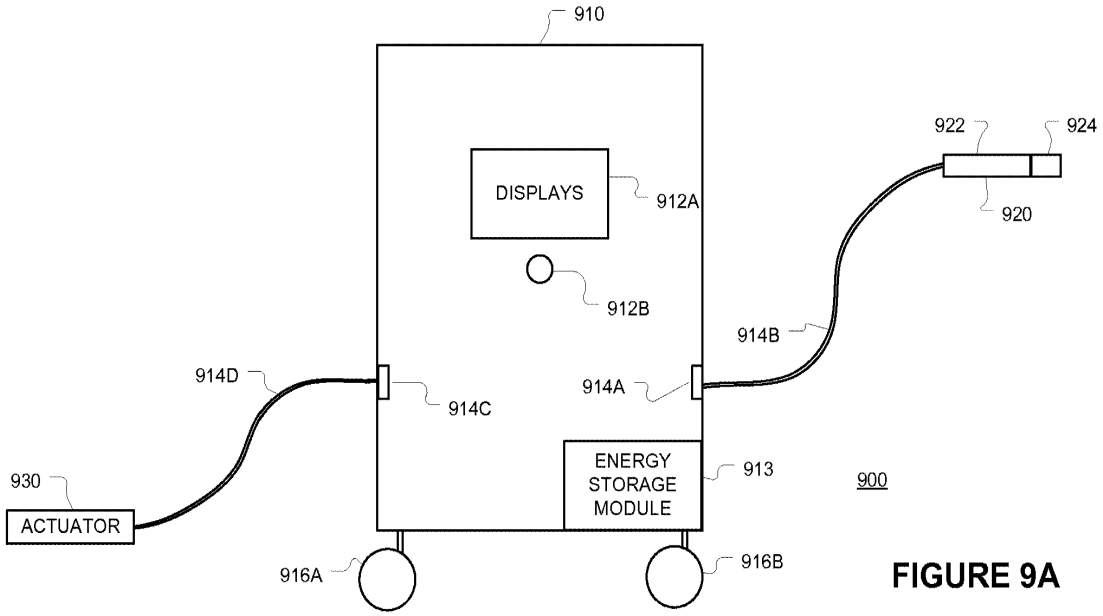

FIGURE 9A

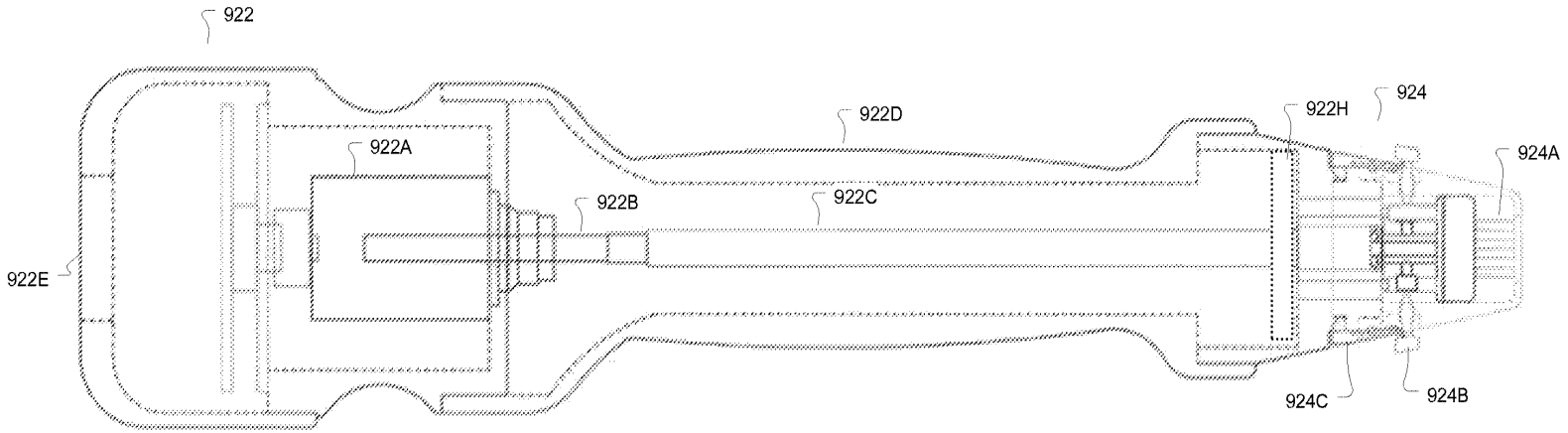

920

FIGURE 9C

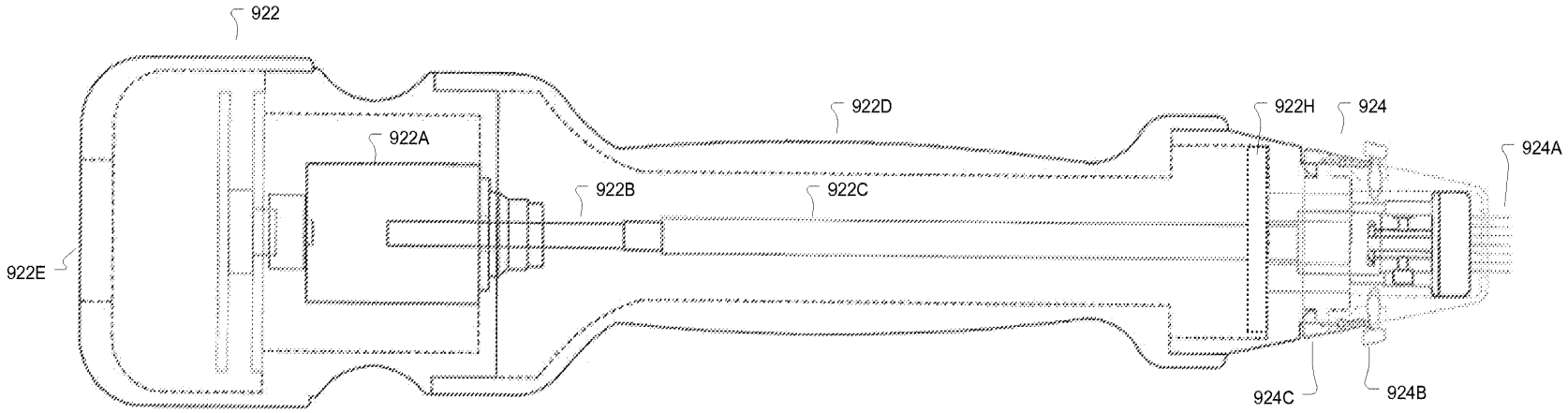

920

FIGURE 9D

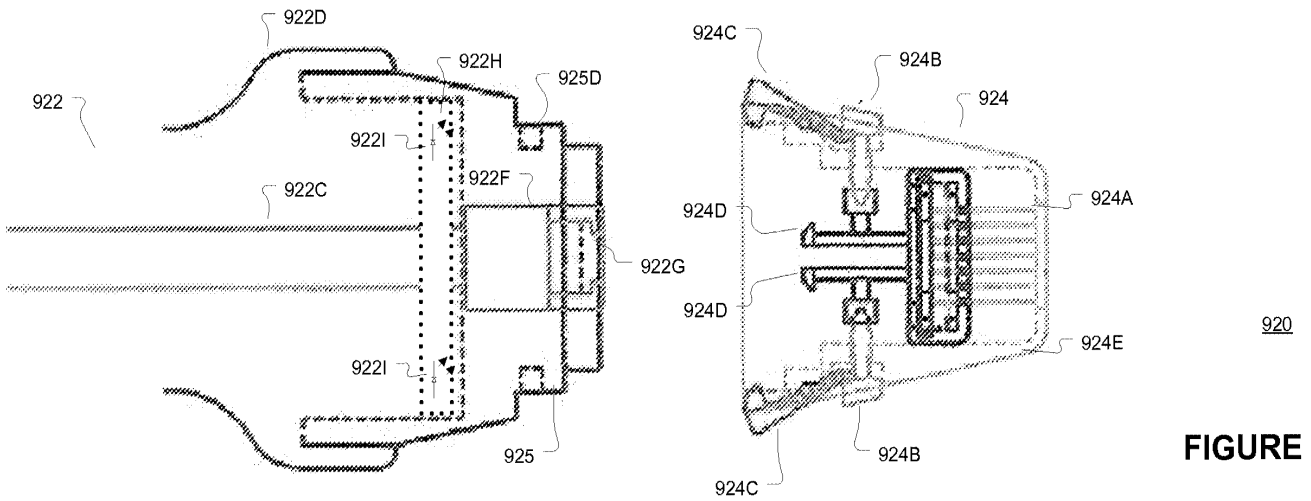

FIGURE 10A

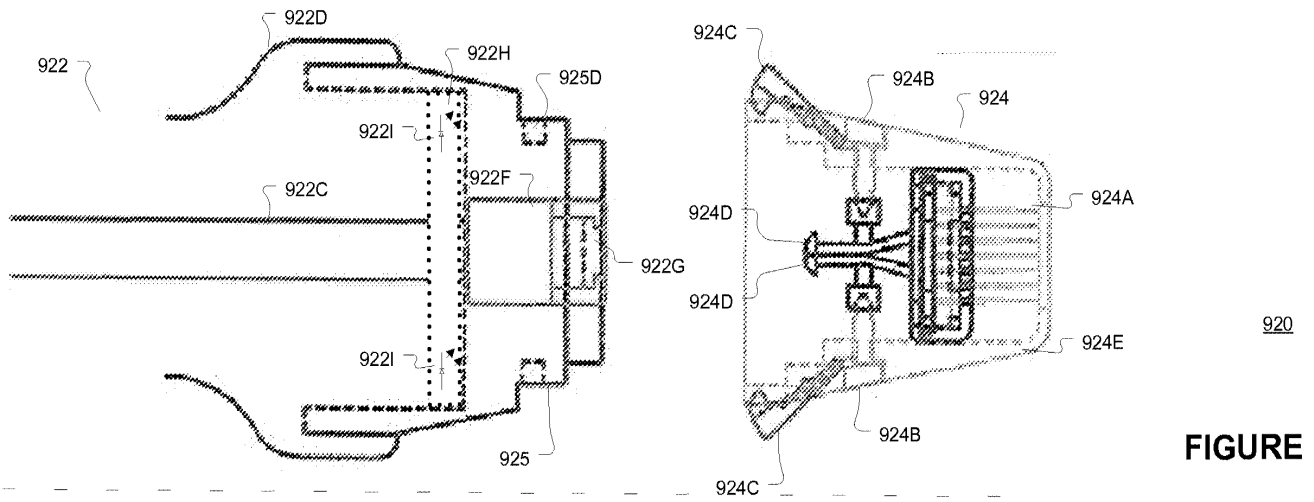

FIGURE 10B

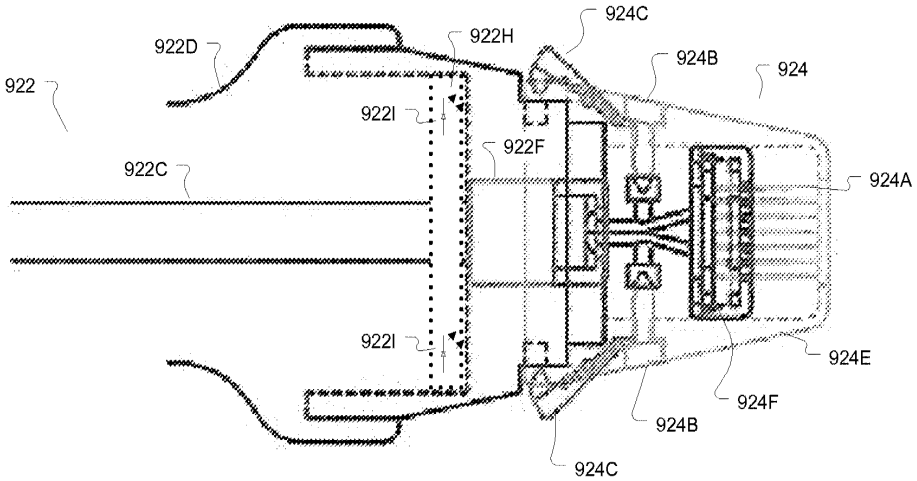

FIGURE 10C

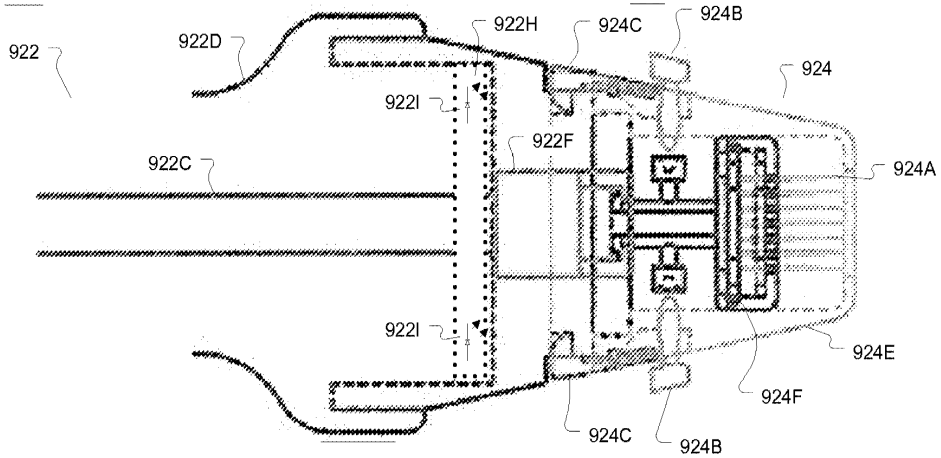

FIGURE 10D

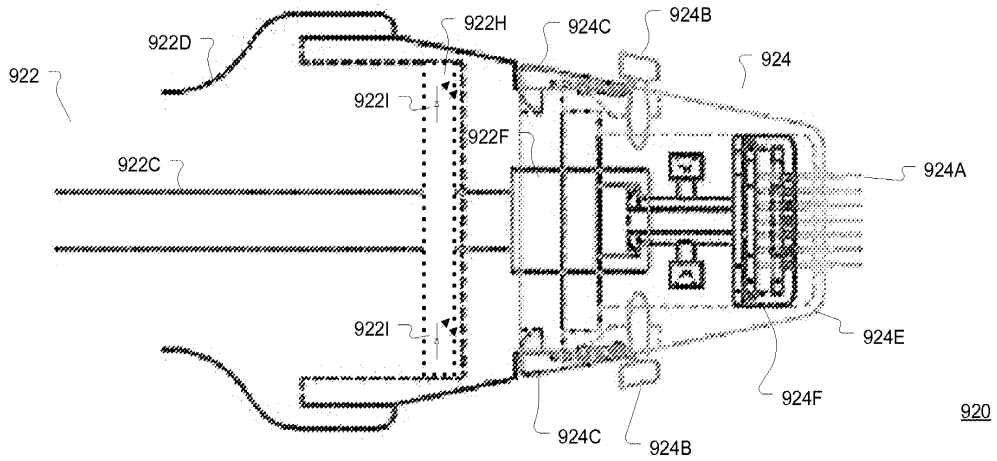

FIGURE 10E

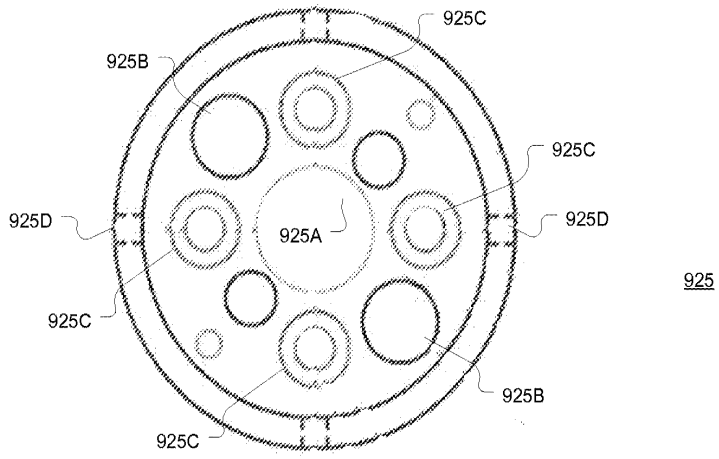

FIGURE 10F

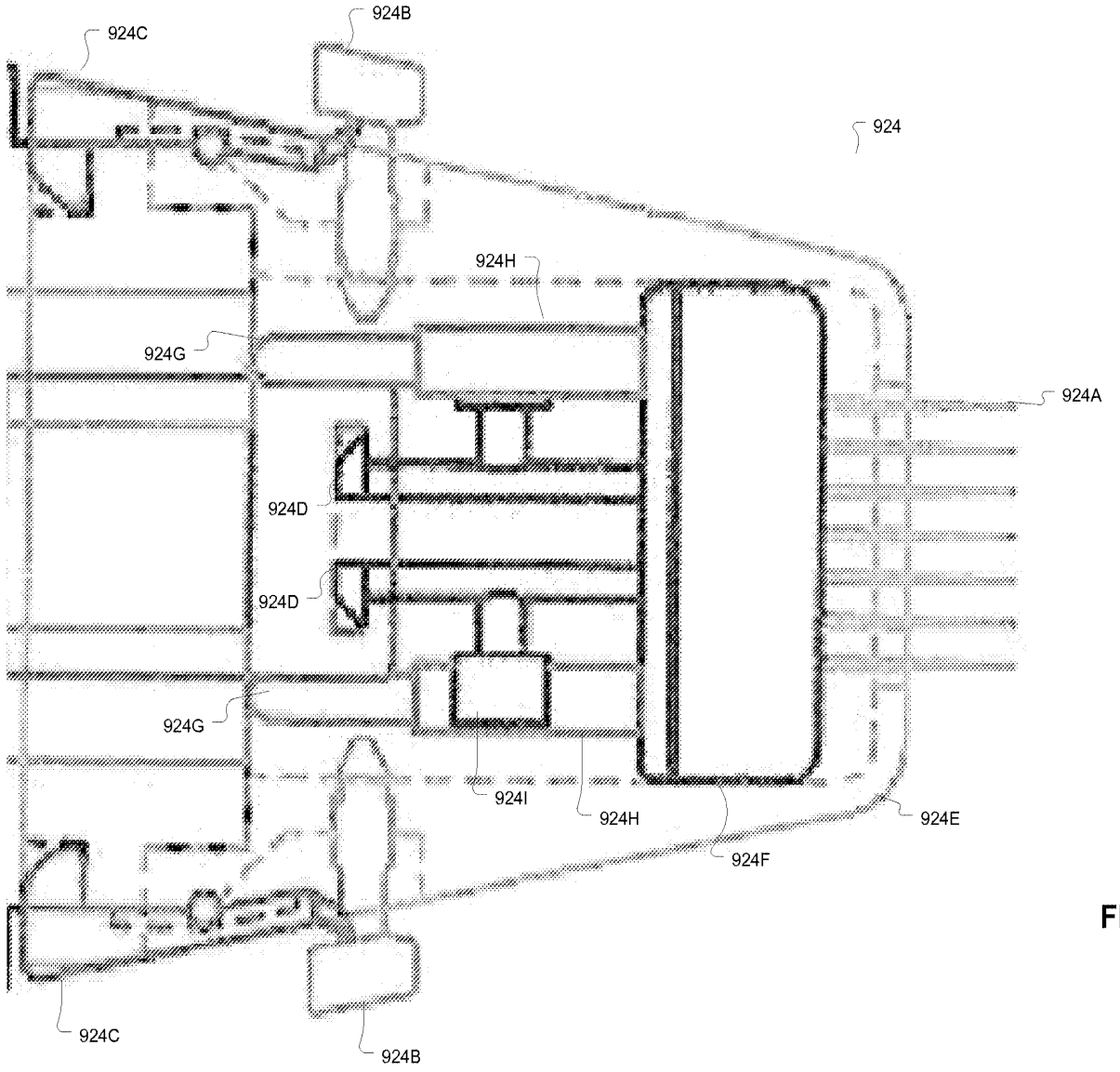
924C
924B
924
924H
924G
924A
924D
924D
924G
924I
924H
924E
924F
924C
924B

FIGURE 11A

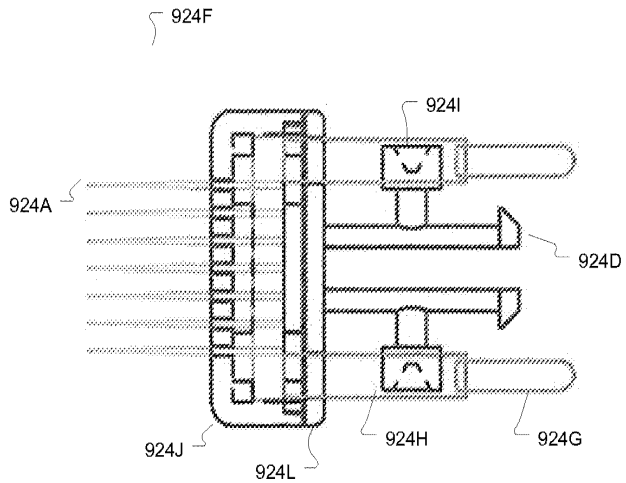

FIGURE 11B

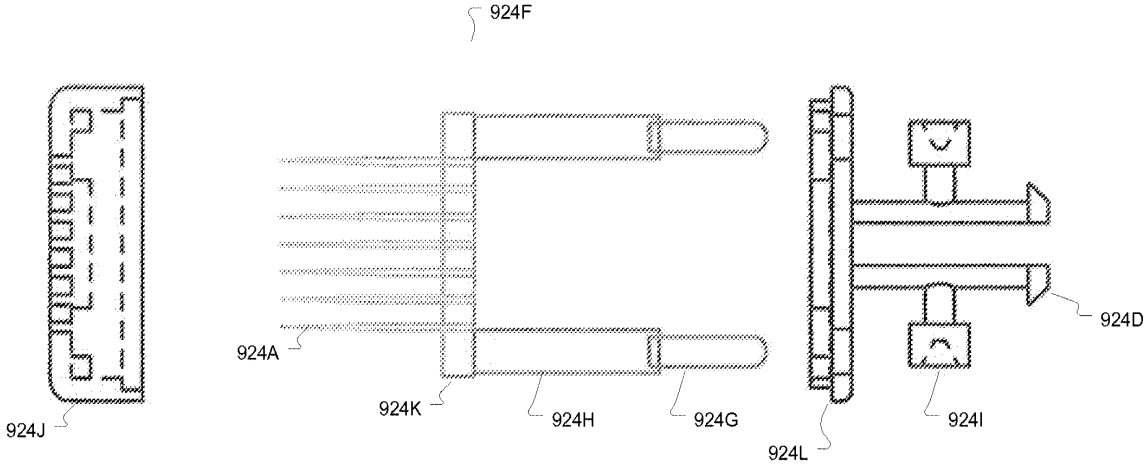

FIGURE 11C

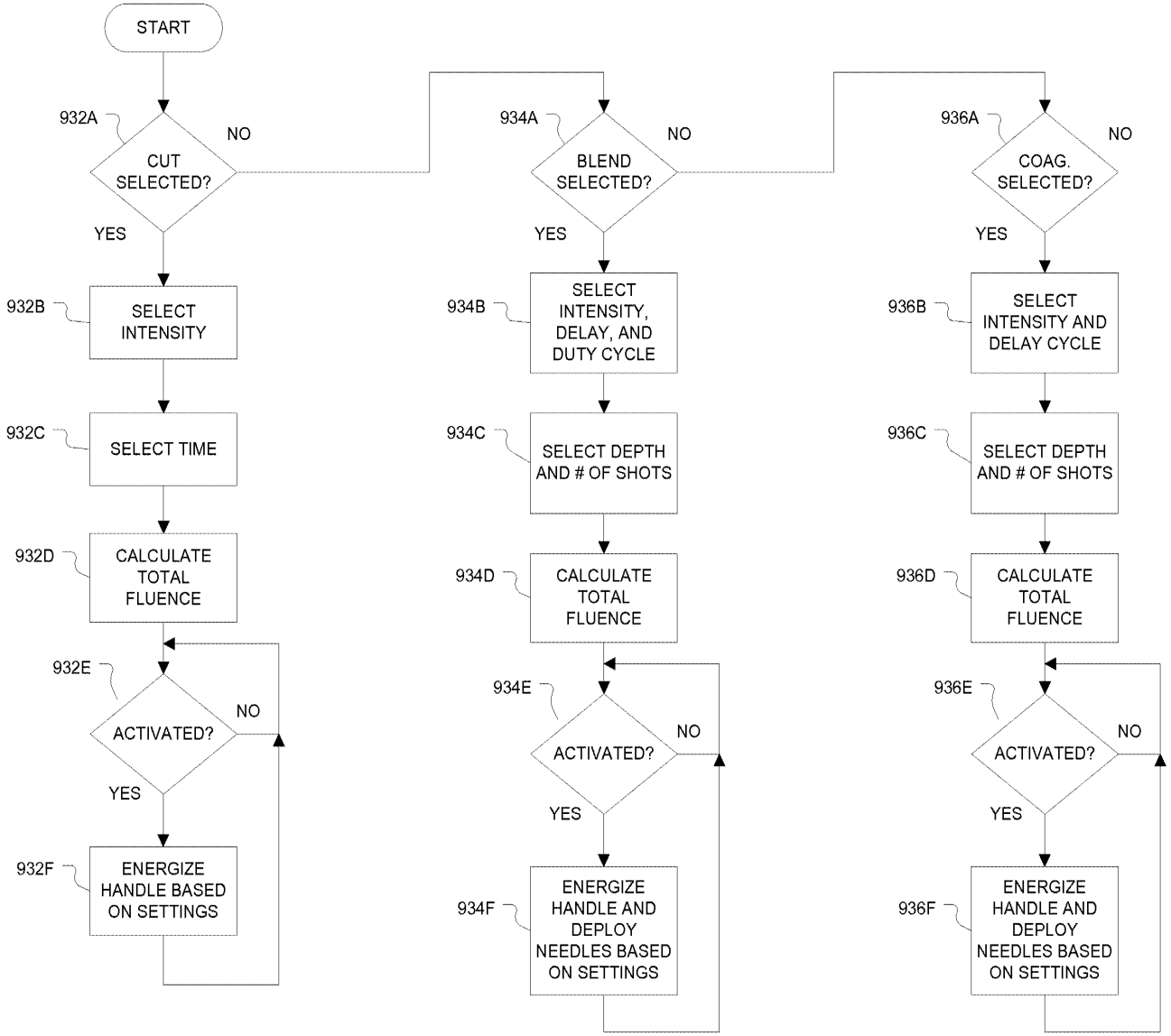
START
932A
CUT SELECTED?
NO
YES
932B
SELECT INTENSITY
932C
SELECT TIME
932D
CALCULATE TOTAL FLUENCE
932E
ACTIVATED?
NO
YES
932F
ENERGIZE HANDLE BASED ON SETTINGS
934A
BLEND SELECTED?
NO
YES
934B
SELECT INTENSITY, DELAY, AND DUTY CYCLE
934C
SELECT DEPTH AND # OF SHOTS
934D
CALCULATE TOTAL FLUENCE
934E
ACTIVATED?
NO
YES
934F
ENERGIZE HANDLE AND DEPLOY NEEDLES BASED ON SETTINGS
936A
COAG. SELECTED?
NO
YES
936B
SELECT INTENSITY AND DELAY CYCLE
936C
SELECT DEPTH AND # OF SHOTS
936D
CALCULATE TOTAL FLUENCE
936E
ACTIVATED?
NO
YES
936F
ENERGIZE HANDLE AND DEPLOY NEEDLES BASED ON SETTINGS
930

FIGURE 12

PA 7355499

THE UNITED STATES OF AMERICA

TO ALL TO WHOM THESE PRESENTS SHALL COME:

UNITED STATES DEPARTMENT OF COMMERCE
United States Patent and Trademark Office

May 11, 2012

THIS IS TO CERTIFY THAT ANNEXED HERETO IS A TRUE COPY FROM THE RECORDS OF THE UNITED STATES PATENT AND TRADEMARK OFFICE OF THOSE PAPERS OF THE BELOW IDENTIFIED PATENT APPLICATION THAT MET THE REQUIREMENTS TO BE GRANTED A FILING DATE UNDER 35 USC 111.

APPLICATION NUMBER: *61/449,080*
FILING DATE: *March 03, 2011*

THE COUNTRY CODE AND NUMBER OF YOUR PRIORITY APPLICATION, TO BE USED FOR FILING ABROAD UNDER THE PARIS CONVENTION, IS *US61/449,080*

By Authority of the
Under Secretary of Commerce for Intellectual Property
and Director of the United States Patent and Trademark Office

P. SWAIN
Certifying Officer

Electronic Acknowledgement Receipt

EFS ID:	9584356
Application Number:	61449080
International Application Number:	
Confirmation Number:	2560
Title of Invention:	METHOD, SYSTEM, AND APPARATUS FOR DERMALOGICAL TREATMENT
First Named Inventor/Applicant Name:	Jongju Na
Customer Number:	26338
Filer:	Merle W. Richman
Filer Authorized By:	
Attorney Docket Number:	NA001US1
Receipt Date:	03-MAR-2011
Filing Date:	
Time Stamp:	23:08:14
Application Type:	Provisional

Payment information:

Submitted with Payment	yes
Payment Type	Credit Card
Payment was successfully received in RAM	$110
RAM confirmation Number	6643
Deposit Account	
Authorized User	

File Listing:

Document Number	Document Description	File Name	File Size(Bytes)/ Message Digest	Multi Part /.zip	Pages (if appl.)

Copy provided by USPTO from the IFW Image Database on 05/04/2012

1	Drawings-only black and white line drawings	na001us1-drawings.pdf	913936 3745d1afded0041467dc0d4da4ab01e95ccebf1f3	no	21
Warnings:					
Information:					
2	Specification	na001us1-application.pdf	147677 b50b5dfdf2b21723ce0116c435Bed39b835b4e78	no	26
Warnings:					
Information:					
3	Provisional Cover Sheet (SB16)	na001us1-transmittal.pdf	83132 2578409dc5a32a1d8704c9b9712d94432d23c93b	no	1
Warnings:					
This is not a USPTO supplied Provisional Cover Sheet SB16 form.					
Information:					
4	Fee Worksheet (PTO-875)	fee-info.pdf	29452 1cc503b202cfc01e217e0fc56f0970740518 6c04	no	2
Warnings:					
Information:					
			Total Files Size (in bytes):	1174197	

This Acknowledgement Receipt evidences receipt on the noted date by the USPTO of the indicated documents, characterized by the applicant, and including page counts, where applicable. It serves as evidence of receipt similar to a Post Card, as described in MPEP 503.

<u>New Applications Under 35 U.S.C. 111</u>
If a new application is being filed and the application includes the necessary components for a filing date (see 37 CFR 1.53(b)-(d) and MPEP 506), a Filing Receipt (37 CFR 1.54) will be issued in due course and the date shown on this Acknowledgement Receipt will establish the filing date of the application.

<u>National Stage of an International Application under 35 U.S.C. 371</u>
If a timely submission to enter the national stage of an international application is compliant with the conditions of 35 U.S.C. 371 and other applicable requirements a Form PCT/DO/EO/903 indicating acceptance of the application as a national stage submission under 35 U.S.C. 371 will be issued in addition to the Filing Receipt, in due course.

<u>New International Application Filed with the USPTO as a Receiving Office</u>
If a new international application is being filed and the international application includes the necessary components for an international filing date (see PCT Article 11 and MPEP 1810), a Notification of the International Application Number and of the International Filing Date (Form PCT/RO/105) will be issued in due course, subject to prescriptions concerning national security, and the date shown on this Acknowledgement Receipt will establish the international filing date of the application.

Copy provided by USPTO from the IFW Image Database on 05/04/2012

ATTORNEY DOCKET NO. NA001US1

IN THE U.S. PATENT AND TRADEMARK OFFICE
Provisional Application Cover Sheet

COMMISSIONER FOR PATENTS
P.O. Box 1450
Alexandria, VA 22313-1450

Sir:

This is a request for filing a PROVISIONAL APPLICATION under 37 CFR 1.53(c).

INVENTOR(s)/APPLICANT(s)

Last Name	First Name, MI	Residence (City and Either State or Foreign Country)
Na	Jongju	Songpa-Gu, Republic of Korea

TITLE OF THE INVENTION

METHOD, SYSTEM, AND APPARATUS FOR DERMALOGICAL TREATMENT

CORRESPONDENCE ADDRESS

Merle Richman
Merle W. Richman, Cust ID - 26338
Customer ID - 26338
PO Box 3333
La Jolla, CA 92038-3333

ENCLOSED APPLICATION PARTS (check all that apply)

(X) Specification *Number of Pages* 26
(X) Drawing(s) *Number of Pages* 21
( ) Power of Attorney
( ) Additional inventors are being named on separately numbered sheets attached hereto.

METHOD OF PAYMENT

A check in the amount of $_____ to cover the filing fee is enclosed.

Electronic Payment of $110.00 _____.

Respectfully submitted,

/mwresq/
Merle Richman
Attorney/Agent for Applicant(s)
Reg. No. 38282

Date: March 3, 2011

Telephone No.: 858 320-2030

"Express Mail" label no. electronic

Date of Deposit: March 3, 2011

I hereby certify this correspondence is being deposited with the United States Postal Service 'Express Mail Post Office to Addressee' service under 37 CFR 1.10 in an envelope addressed to the Commissioner for Patents, P.O. Box 1450, Alexandria, VA 22313-1450, or the correspondence is being electronically transmitted to the USPTO, on the date indicated above.

By /mwresq/
Typed Name: Merle Richman

Copy provided by USPTO from the IFW Image Database on 05/04/2012

UNITED STATES PATENT APPLICATION

METHOD, SYSTEM, AND APPARATUS FOR DERMALOGICAL TREATMENT

INVENTOR

Jongju Na of Republic of Korea

Prepared by:

Merle W. Richman, Esq.
P.O. Box 3333
La Jolla, CA 92038-3333
ATTORNEY DOCKET NA001US1

Copy provided by USPTO from the IFW Image Database on 05/04/2012

METHOD, SYSTEM, AND APPARATUS FOR DERMALOGICAL TREATMENT

Cross Reference to Related Applications

[0001] The present application claims the benefit of priority to Republic of Korea Application Number 10-2008-0076993, entitled "Electrical system, skin, skin care and cosmetic electricity," filed on August 6, 2008, PCT Application Number PCT/US2008/074131, entitled "METHOD, SYSTEM, AND APPARATUS FOR DERMALOGICAL TREATMENT", Attorney Docket No. NA001PCT filed on August 22, 2008, and US Application Number 13/060,274, entitled "METHOD, SYSTEM, AND APPARATUS FOR DERMALOGICAL TREATMENT", Attorney Docket No. NA001US filed on February 22, 2011, the entirety of each is incorporated by reference.

Technical Field

[0002] Various embodiments described herein relate generally to treating dermalogical tissue, including systems, and methods used in treating dermalogical tissue.

Background Information

[0003] It may be desirable to treat dermalogical tissue; the present invention provides such treatment.

Brief Description of the Drawings

[0004] FIG. 1A is a simplified isometric diagram of a dermalogical treatment apparatus according to various embodiments.

[0005] FIG. 1B is a simplified, side diagram of the dermalogical treatment apparatus according to various embodiments.

[0006] FIG. 1C is a simplified, exploded layer view of the dermalogical treatment apparatus according to various embodiments.

Copy provided by USPTO from the IFW Image Database on 05/04/2012

[0007] FIG. 1D is a simplified view of a layer of a dermalogical treatment apparatus according to various embodiments.

[0008] FIG. 2A is a simplified isometric diagram of a dermalogical treatment architecture according to various embodiments.

[0009] FIG. 2B is a simplified cross-sectional diagram of a dermalogical treatment apparatus according to various embodiments.

[0010] FIG. 2C is a simplified cross-sectional diagram of another dermalogical treatment apparatus according to various embodiments.

[0011] FIG. 2D is a simplified cross-sectional diagram of another dermalogical treatment apparatus according to various embodiments.

[0012] FIG. 2E is a simplified view of a layer of a dermalogical treatment apparatus according to various embodiments.

[0013] FIG. 2F is a simplified, exploded view of layers of the dermalogical treatment apparatus according to various embodiments.

[0014] FIG. 3A is a simplified isometric diagram of a dermalogical treatment apparatus according to various embodiments.

[0015] FIG. 3B is a simplified isometric diagram of another dermalogical treatment apparatus according to various embodiments.

[0016] FIG. 4A is a simplified view of a layer of a dermalogical treatment apparatus according to various embodiments.

[0017] FIG. 4B is a simplified view of a layer and apparatus of a dermalogical treatment system according to various embodiments.

[0018] FIG. 4C is a simplified view of a layer and apparatus of a dermalogical treatment system according to various embodiments.

[0019] FIGs. 5A-6 are diagrams of signals that may be applied to one or more dermalogical treatment systems according to various embodiments.

[0020] FIG. 7A-7C are flow diagrams illustrating dermalogical treatment system processing algorithms according to various embodiments.

[0021] FIG. 8 is a block diagram of an article according to various embodiments.

[0022] FIG. 9A is a simplified block diagram of a dermalogical treatment architecture according to various embodiments.

Copy provided by USPTO from the IFW Image Database on 05/04/2012

[0023] FIG. 9B is a block diagram of an article according to various embodiments that may be employed in architecture of FIG. 9A.

[0024] FIG. 9C is a simplified cross-sectional diagram of a cartridge based dermalogical treatment apparatus with the needles retracted according to various embodiments.

[0025] FIG. 9D is a simplified cross-sectional diagram of a cartridge based dermalogical treatment apparatus with the needles deployed according to various embodiments.

[0026] FIG. 10A-10D are simplified, partial, cross-sectional diagrams of a cartridge in various stages of attachment to a dermalogical treatment apparatus according to various embodiments.

[0027] FIG. 10E is a simplified, partial, cross-sectional diagram of a dermalogical treatment apparatus with needles deployed according to various embodiments.

[0028] FIG. 10F is a simplified cross-sectional diagram of a cartridge based dermalogical treatment apparatus cartridge interface according to various embodiments.

[0029] FIG. 11A is a simplified, partial, cross-sectional diagram of a dermalogical treatment apparatus cartridge coupled to a handle with needles deployed according to various embodiments.

[0030] FIG. 11B is a simplified, cross-sectional diagram of a cartridge needle assembly according to various embodiments.

[0031] FIG. 11C is a simplified, cross-sectional, exploded diagram of a cartridge needle assembly according to various embodiments.

[0032] FIG. 12 is a flow diagram illustrating a dermalogical treatment system processing algorithms according to various embodiments.

Copy provided by USPTO from the IFW Image Database on 05/04/2012

Detailed Description

[0033] FIG. 1A is a simplified isometric diagram and FIG. 1B is a simplified side view of a dermalogical treatment apparatus 10 according to various embodiments. The apparatus 10 may include a user handle 220 coupled to an acupuncture plate 200. In an embodiment the plate 200 may be elastically coupled to the handle segment 222 via an elastomeric section 210. The elastomeric section may be comprised of a combination of elastomeric materials and non-elastomeric materials. The elastomeric materials may include plastics, rubber (synthetic or natural), and spring(s).

[0034] FIG. 1C includes a simplified exploded view of an embodiment of an acupuncture plate 200 according to various embodiments. The plate 200 may include an upper, substantially rigid section or layer 290, deformable or elastic section 270 or layer, and acupuncture section or layer 250. The acupuncture section 250 may include a plurality of acupuncture pins or needles 230. FIG. 1D is a simplified bottom view of the plate 200 showing the location or holes 212 for the pins or needles 230. In an embodiment the plate 200 may have a rectangular cross section having a dimensional about 1 to 4 cm in width and about 1 to 6 cm in length. The plate 200 may any shape including circular, elliptical, polygon, or other shape where the shape may be particular to a dermalogical area to be treated.

[0035] In an embodiment the plate may include about 140 pins or needles 230 uniformly separated. Each needle may be about 0.1 to 0.4 mm in diameter and 0.2 mm to 1.4 mm in length including 0.3 mm diameter and 0.8 mm in length in an embodiment. The elastic section or layer 270 may be comprised of a combination of elastomeric materials and non-elastomeric materials. The elastomeric materials may include plastics, rubber (synthetic or natural), and spring(s). The pin section 230 may be coupled directly or indirectly to the upper section 290 via the elastic section 250, including via glues, screws, welds, or other connection. In an embodiment the pin section 250 may include elastomers to enable at least partial deformation of the pin section 250 about the pins 230.

[0036] In operation a user may employ the apparatus 10 to create a plurality of micro-wounds or holes in dermalogical layers of a mammal's 20 skin or dermis. The micro-wound or hole creation may improve the absorption or application of one or more chemicals applied on or about the micro-wounds or holes.

[0037] FIG. 2A is a simplified diagram of a dermalogical treatment architecture 310 according to various embodiments. Architecture 310 includes an acupuncture apparatus 320 and an

Copy provided by USPTO from the IFW Image Database on 05/04/2012

electrical signal generation system 300. The electrical signal generation system 300 may be electrically coupled to the acupuncture apparatus 320 via one or more wires 300A and to a mammal 20 to be treated via one or more wires 300B. FIG. 2B is a simplified cross-sectional diagram of the acupuncture apparatus 320 according to various embodiments. The apparatus 320 may include a handle 330, elastic section 333, electrical interface 340, internal wire(s) 331and plate 350. The pins 351 may have a length A (0.3 mm to 2.1 mm in an embodiment) where at least one pin 351 is electrically coupled to the electrical interface 340 via the internal wire 331. The electrical interface 340 may be removably connected to the system 300 wire 300A.

[0038] The electrical signal generation system 300 may generate a variety of signals (such as shown in FIGS. 5A to 6) to vibrate one or more pins 351 electrically coupled to the system 300 via the internal wire 331 and lead 300A. A pin vibration 351 may increase the micro-wound or cut formed in dermis by the pin 351. FIG. 2C is a simplified cross-sectional diagram of an acupuncture apparatus 360 according to various embodiments. The apparatus 360 may include a handle 330, an elastic section 333, an electrical conductive interface 390, internal wire(s) 331, signal generator 370, switch 375, and plate 350. The signal generator 370 may be coupled to at least one pin 351 via internal wire 331 and coupled to the conductive interface 390.

[0039] The signal generator or module 370 may generate a variety of signals (such as shown in FIGS. 5A to 6) to vibrate one or more pins 351 electrically coupled to the system 300 via the internal wire 331 and the conductive interface 390. In operation a user 20 may touch the conductive interface 390 and place one or more electrically coupled pins 351 in contact with their dermis to form an electrical pathway from the pin 351 to the electrical conductive interface 390. The signal generator 370 may include a battery to supply energy to generate one or more electrical signals. The switch 375 coupled to the generator 370 may cause the generator to produce one or more electrical signals for a predetermined time interval or until the switch 375 is triggered again. As noted a pin vibration 351 may increase the micro-wound or cut formed in dermis by the pin 351.

[0040] FIG. 2D is a simplified cross-sectional diagram of an acupuncture apparatus 362 according to various embodiments. The apparatus 362 may include a handle 330, an elastic section 333, internal wire(s) 331, 332, signal generator 370, switch 375, and plate 350. The signal generator 370 may be coupled to at least one pin 351 via internal wire 331 and coupled to at least one other pin 352 via internal wire 332. When active the pins 351, 352 may form at least one dipole pair. The

Copy provided by USPTO from the IFW Image Database on 05/04/2012

signal generator or module 370 may generate a variety of signals (such as shown in FIGS. 5A to 6) to vibrate one or more dipole pair or bipolar pins 351, 352.

[0041] FIG. 2F includes a simplified exploded view of an embodiment of an acupuncture plate 350 including at least one electrically coupled pin 351 according to various embodiments. The plate 350 may include an upper, substantially rigid section or layer 357, deformable or elastic section 355 or layer, and acupuncture section or layer 353. The acupuncture section 353 may include a plurality of acupuncture pins or needles 351 where at least one pin 351 is electrically coupled to the wire 331. In a bipolar configuration a second wire 332 may be coupled to at least one other pin 351. FIG. 2E is a simplified bottom view of the plate 350 showing the pins or needles 359, 357 where the pins may be electrically coupled to a first wire 331 and a second wire 332 to form dipole pair (bipolar pins).

[0042] In an embodiment the plate 350 may have a rectangular cross section having a dimensional about 1 to 4 cm in width and about 1 to 6 cm in length. The plate 350 may any shape including circular, elliptical, polygon, or other shape where the shape may be particular to a dermalogical area to be treated.

[0043] In an embodiment the plate may include about 140 pins or needles 351 uniformly separated. Each needle may be about 0.1 to 0.4 mm in diameter and 0.2 mm to 1.4 mm in length including 0.3 mm diameter and 0.8 mm in length in an embodiment. The elastic section or layer 355 may be comprised of a combination of elastomeric materials and non-elastomeric materials. The elastomeric materials may include plastics, rubber (synthetic or natural), and spring(s). The pin section 353 may be coupled directly or indirectly to the upper section 357 via the elastic section 353, including via glues, screws, welds, or other connection. In an embodiment the pin section 353 may include elastomers to enable at least partial deformation of the pin section 353 about the pins 351.

[0044] FIGS. 3A and 3B are simplified isometric diagrams of acupuncture apparatus 400, 460 including at least one pin 451 that may be coupled to an electrical signal via an internal wire 458. Each apparatus 400, 460 includes curved roller 450 having a plurality of acupuncture pins 451 where the pins 451 may be similar to pins 351. In apparatus 400, the electrical lead wire 400A may be coupled to an electrical interface 410 in the apparatus handle 430 where the interface 410 is electrically coupled to the internal wire 458. In apparatus 460, the handle 430 may include a signal generator 470 similar to generator 370, switch 475, and conduction surface 490. Apparatus 460 may

Copy provided by USPTO from the IFW Image Database on 05/04/2012

operate similar to apparatus 360 in operation other than the rolling capability of the apparatus 460, 400. In an embodiment the rollers 450 may have various configurations to conform to a dermal area to be treated.

[0045] In any of the above apparatus 10, 320, 350, 360, 400, 460, the plate or roller 200, 350, 450 may include a plurality of embedded LEDs 32A, 32B, a battery 52, a controller 54, and an antenna 56 as shown in FIG. 4A. In an embodiment the LED 32A may be configured to emit energy of a first particular frequency range and the LED 32B may be configured to emit energy of a second particular frequency range. The surface 22 of a roller 450, plate 200, 350, 450 may also be embedded with a chemical 22A that may be used to treat dermalogical cells. The chemical 22A may be reactive to the first and the second frequency ranges. Further dermalogical cells may be reactive to the first and the second frequency ranges. In addition, the combination of the chemical 22A and the application of the first and the second frequency ranges to the chemical 22A and dermalogical cells may have a synergetic effect.

[0046] In an embodiment the chemical 22A may be applied directly to the dermalogical cells to be treated. In a further embodiment a chemical 22A may not be employed in addition to the apparatus 10, 320, 350, 360, 400, 460. In an embodiment the pin section 250, 353, may be translucent and comprised of polyurethane, medical silicon, or other pliable, translucent, hypoallergenic material.

[0047] In an embodiment the local controller 54 and battery 52 may also be embedded in the upper section 290, 357, pin section 230, 351, or the handle 220, 330, or separately between these sections. The controller 54 may be electrically coupled to the one or more LEDS 32A, 32B. The controller 54 may also be coupled to a battery 52. The controller 54 may generate one or more signals for LEDs 32A, 32B as a function of a user switch 75, 56. The signals may vary as a function of the first and second frequency ranges. The controller 54 may include one or more timers 58 that may limit the application of energy to the LEDs 32A, 32B to predetermined time intervals. In an embodiment the controller may also be coupled to an antenna 56 to receive or transmit one or more signals related to the transmission of energy to one or more LEDs 32A, 32B. In an embodiment the system 10 may be configured to treat a particular segment of dermalogical cells such as a face. The apparatus 10 may be configured to conform to a user's anatomy so that emitted light is focused on dermalogical cells. In another embodiment 200, the system 200 may be configured to treat another

Copy provided by USPTO from the IFW Image Database on 05/04/2012

anatomical region including dermalogical cells on an arm, leg, chest, hands, feet, neck, or other region.

[0048] In an embodiment 510 shown in FIG. 4B, a controller 54, an antenna 104, and a power source 60 may be located in external to the apparatus 10, 320, 360. The power source 60 may be coupled to the controller 54. The controller 54 may be coupled to one or more LEDs 32A, 32B via one or more electric wires 106. The controller 54 may generate one or more signals for LEDs 32A, 32B as a function of the user switch 56. The signals may vary as a function of the first and second frequency ranges. The controller 54 may include one or more timers 58 that may limit the application of energy to the LEDs 32A, 32B to predetermined time intervals. In an embodiment the controller may also be coupled to an antenna 104 to receive or transmit one or more signals related to the transmission of energy to one or more LEDs 32A, 32B.

[0049] In any of the above apparatus 10, 320, 350, 360, 400, 460, the plate or roller 200, 350, 450 may include a plurality of embedded LED lens 536, a fiber optic pathway 534, and an LED 532. In this embodiment the LED 532 may be coupled to lens 536 via the fiber optic pathway 534. The controller 540 may generate an LED signal via the LED 532 that is transmitted to dermalogical cells via the lens 536 and the fiber optic pathway 534.

[0050] FIGS.5A-5B are diagrams of electrical signal waveforms 650, 630, 640 that may be applied to one or more LEDs 32A, 32B, 532 and to the pins 230, 351, 451 according to various embodiments. The signal waveform 650 includes several square-wave pulses 652, 654, 656 that may be applied to an LED 32A, 32B, 532. Each pulse 652, 654, 656 may a have a similar magnitude and envelope. The waveform 650 may be used to energize an LED 32A, 32B, 532 and to the pins 230, 351, 451 periodically P1 for a predetermined interval T1 where each pulse 652, 654, 656 has a amplitude A1. In an embodiment, A1 may be about 0.1 milliamperes (mA) to 10 mA, the pulse width T1 may be about 100 microseconds (μs) to 500 μs and the period P1 may from 100 ms to 500 ms as a function of the energy required to create capacitance in a liquid. In another embodiment, A1 may be about 0.5 milliamperes (mA) to 5 mA, the pulse width T1 may be about 200 microsecond (μs) and the period P1 may about 250 ms as a function of the energy to drive an LED or cause one or more pins 230, 351, 451 to vibrate.

[0051] In FIG. 5B a signal waveform 630 may be applied to a first LED 32A, 32B, 532 module or group and to the pins 230, 351, 451 and a second waveform 640 may be applied or used to energize a second LED 32A, 32B, 532 module and the pins 230, 351, 451, 352. The signal

Copy provided by USPTO from the IFW Image Database on 05/04/2012

waveform 630 includes several square-wave pulses 632, 634, and 636 and the signal waveform 640 includes several square-wave pulses 642, 644, and 646. Each pulse 632, 634, 636, 642, 644, 646 may a have a similar magnitude and envelope. The waveform 630 may be used to energize a first LED 32A, 32B, 332 module and the pins 230, 351, 451 periodically P1 for a predetermined interval T1 where each pulse 632, 634, 636 has an amplitude A1. The waveform 640 may be used to energize a second LED 32A, 32B, 332 module and the pins 230, 351, 451 periodically P2 for a predetermined interval T2 where each pulse 642, 644, 646 has an amplitude B1. The pulse width T1, T2 may be about 100 microseconds (μs) to 500 μs and the period P1, P2 may from 100 ms to 500 ms as a function of the energy to affect dermalogical cells or chemicals 22A. In another embodiment, A1, A2 may be about 0.5 milliamperes (mA) to 5 mA, the pulse width T1, T2 may be about 200 microsecond (μs) and the period P1, P2 may about 250 ms as a function of the energy required to affect dermalogical cells or chemicals 22A. In an embodiment the pulses 632, 634, 636 do not substantially overlap the pulses 642, 644, 646. In an embodiment T1 > T2 and P2 is an integer multiple of P1.

[0052] FIG. 6 depicts a waveform 670 that includes multiple pulses 672, 674, 676, 678, 682, and 684 that may not overlap in the time or the frequency domain. In an embodiment each pulse 672, 674, 676, 678, 682, and 684 may have a pulse width T3, and frequency spectrum width F1 and period P3. The pulse 672 is frequency offset from the pulse 674, the pulse 676 is frequency offset from the pulse 678, and the pulse 682 is frequency offset from the pulse 684. The pulses 672, 674, 676, 678, 682, and 684 may be applied to an LED module to affect dermalogical cells or chemicals 22A and the pins 230, 351, 451. Pulses 672, 674 having different frequency spectrums may enable different LED stimulation. In an embodiment the pulses 672, 676, 682 may be applied to a first LED module and the pulses 674, 678, 684 may be applied to a second LED module. The frequency separation between the respective pulses may enable simultaneous energization of a first and a second LED module and the pins 230, 351, 451 and subsequent and independent spectrum generation.

[0053] In an embodiment the invention may employ the algorithm 740 shown in FIG. 7A to apply therapy to dermalogical cells. A user, clinician, or equipment may place an apparatus 10, 320, 360, 360, 400, 460 on dermalogical cells to be treated (activity 741) including pressing the apparatus against the cells firmly enough to embed one or more pins 251, 351, 451 in the cells. A first signal such as shown in FIGS. 5A, 5B, and 6 may be applied to a first LED module or group

Copy provided by USPTO from the IFW Image Database on 05/04/2012

(32A) and the pins 230, 351, 451 of a dermalogical apparatus 10, 320, 360, 360, 400, 460 (activity 742) for a predetermined time period (activity 744). A second signal such as shown in FIGS. 5A, 5B, and 6 may be applied to a second LED module or group (32B) and the pins 230, 351, 451 of a dermalogical apparatus 10, 320, 360, 360, 400, 460 (activity 746) for a predetermined time period (activity 748). The signals applied to the groups may be selected to stimulate dermalogical cells or chemicals 22A or cause vibration of one or more pins 251, 351, 451.

[0054] In another embodiment the invention may employ the algorithm 750 shown in FIG. 7B to apply therapy to dermalogical cells. A user, clinician, or equipment may apply a light sensitive chemical on an apparatus 10, 320, 360, 360, 400, 460 or on dermalogical cells to be treated (activity 751). The user, clinician, or equipment may place apparatus 10, 320, 360, 360, 400, 460 on dermalogical cells to be treated (activity 752). A signal such as shown in FIGS. 5A, 5B, and 6 may be applied to a LED module or group (32A or 32B) and the pins 230, 351, 451 (activity 354) for a predetermined time period (activity 356).

[0055] In another embodiment the invention may employ the algorithm 760 shown in FIG. 7C to apply therapy to dermalogical cells. A user, clinician, or equipment may apply a light sensitive chemical on an apparatus 10, 320, 360, 360, 400, 460 or on dermalogical cells to be treated (activity 761). The user, clinician, or equipment may place an apparatus 10, 320, 360, 360, 400, 460 on dermalogical cells to be treated (activity 762). A first signal such as shown in FIGS. 5A, 5B, and 6 may be applied to a first LED module or group (32A) and one or more pins 251, 351, 451 of a dermalogical apparatus 10, 320, 360, 360, 400, 460 (activity 763) for a predetermined time period (activity 764). A second signal such as shown in FIGS. 5A, 5B, and 6 may be applied to a second LED module or group (32B) and one or more pins 251, 351, 451 of a dermalogical apparatus 10, 320, 360, 360, 400, 460 (activity 766) for a predetermined time period (activity 768).

[0056] The apparatus 10, 320, 360, 360, 400, 460 may be used to employ cosmetic or medications or other chemicals directly on dermalogical cells such as skin with the addition of light of specific frequencies for treatment and healing of epidermal cells of the skin or tissue below the skin with the object of assisting the agents used in delivery, uptake, action and function more effectively. The LEDs 32A, 32B may create the specific frequencies of light. The apparatus 10, 320, 360, 360, 400, 460, light application may enable cosmetic or medication or other active chemicals 22A on dermalogical cells for longer time periods while preventing dehydration of the

Copy provided by USPTO from the IFW Image Database on 05/04/2012

applied substances. Such light application may improve the efficacy of cosmetic or medication or other active chemical as a function of the selected wavelengths or frequencies.

[0057] Further the dermalogical system application may increase cellular activity and help heal tissue faster and facilitate the delivery, uptake and use in the cell of the cosmetics, medications, or chemicals 22A used. The LED light of specific frequencies may increase fibroblast production and collagen as well as other activities of the cell including stimulating the organelles and mitochondria to produce ATP for cell energy for functioning, decreasing treatment time and facilitate healing. The apparatus 10, 320, 360, 360, 400, 460 make the agents used on the body more efficacious and useful to the body on a cellular level.

[0058] The apparatus 10, 320, 360, 360, 400, 460 may stimulate the basic energy processes in the mitochondria (energy compartments) of each cell, particularly when near-infrared light is used to activate the color sensitive chemicals (chromophores, cytochrome systems) inside but not limited to these spectrum alone as the UV, other visible and IR spectrums may also be usable. In an embodiment optimal LED wavelengths for skin repair may include 640, 680, 730 nanometers (nm) wavelengths to IR 880 nm. Further application of blue light 400 nm to 490 via the apparatus 10, 320, 360, 360, 400, 460 may inhibit the growth and kill bacteria, fungus in and on dermalogical cells. The apparatus 10, 320, 360, 360, 400, 460 may be employed to apply cosmetics, medications and/or other actives directly to the skin and maintain their presence long-term while using LED or other actinic light to increase their effect on the cells and tissue in the body. The apparatus 10, 320, 360, 360, 400, 460 are also highly portability and enable user mobility during treatment.

[0059] Chemicals 22A may include cosmetics, medications and other actives appropriate for dermalogical cells including AHA's (alpha hydroxy acid), natural oils, aloe vera compounds, collagen boosters, bt, chitosan, daeses, endorphins, photodynamic drugs (PDT) like (Photofrin or ALA), vitamins A, C E or others, kojic acid, retinols or other exfoliant, salicylic acid, anti oxidants or other youth boosters and anti aging cosmetic or medications, antiseptic, antibiotics, anti-cancer agents, aroma therapy agents, fruit and vegetable extracts, anti-inflammatory agents, pain relievers, hormones, depilatories, and others, but the scope of this invention is not limited to these alone but can include any helpful medication, herbal formula or active compound for the skin and/or other tissues.

[0060] FIG. 8 is a block diagram of an article 780 according to various embodiments. The article 780 shown in FIG. 8 may be used in various embodiments as a part of apparatus 10, 320,

Copy provided by USPTO from the IFW Image Database on 05/04/2012

360, 360, 400, 460 where the article 780 may be any computing device including a personal data assistant, cellular telephone, laptop computer, or desktop computer. The article 780 may include a central processing unit (CPU) 782, a random access memory (RAM) 784, a read only memory (ROM") 806, a display 788, a user input device 812, a transceiver application specific integrated circuit (ASIC) 816, a digital to analog (D/A) and analog to digital (A/D) convertor 815, a microphone 808, a speaker 802, and an antenna 804. The CPU 782 may include an OS module 814 and an application module 813. The RAM 784 may include switches 56 and timers 58.

[0061] The ROM 806 is coupled to the CPU 782 and may store the program instructions to be executed by the CPU 782. The RAM 784 is coupled to the CPU 782 and may store temporary program data, overhead information, and the queues 798. The user input device 812 may comprise an input device such as a keypad, touch pad screen, track ball or other similar input device that allows the user to navigate through menus in order to operate the article 780. The display 788 may be an output device such as a CRT, LCD, LED or other lighting apparatus that enables the user to read, view, or hear user detectable signals.

[0062] The microphone 808 and speaker 802 may be incorporated into the device 780. The microphone 808 and speaker 802 may also be separated from the device 780. Received data may be transmitted to the CPU 782 via a bus 796 where the data may include signals for an LED 32A, 32B, 332 or optical module or wires 331, 458. The transceiver ASIC 816 may include an instruction set necessary to communicate data, screens, or signals. The ASIC 816 may be coupled to the antenna 804 to communicate wireless messages, pages, and signal information within the signal. When a message is received by the transceiver ASIC 816, its corresponding data may be transferred to the CPU 782 via the serial bus 796. The data can include wireless protocol, overhead information, and data to be processed by the device 780 in accordance with the methods described herein.

[0063] The D/A and A/D convertor 815 may be coupled to one or more optical modules to generate a signal to be used to energize one of the optical modules. The D/A and A/D convertor 815 may also be coupled to one devices such as LEDs 32A, 32B and the pins 251, 351, 451. Any of the components previously described can be implemented in a number of ways, including embodiments in software. Any of the components previously described can be implemented in a number of ways, including embodiments in software. Thus, the LEDs 32A, 32B, pins 251, 351, 451, controllers 54, switch 56, timers 58, controller 320 may all be characterized as "modules" herein. The modules may include hardware circuitry, single or multi-processor circuits, memory circuits, software

Copy provided by USPTO from the IFW Image Database on 05/04/2012

program modules and objects, firmware, and combinations thereof, as desired by the architect of the system 10, 30, 50, 60 and as appropriate for particular implementations of various embodiments.

[0064] FIG. 9A is a simplified block diagram of a dermalogical treatment architecture (DTA) 900 according to various embodiments. As shown in FIG. 9A, architecture 900 includes a signal generation and control module (SGC) 910, a handle module 920, and an actuator module 930. In an embodiment the handle module 920 may include a deployable needle module 924 and a motor and LED module 922. In an embodiment the deployable needle module 924 may be releasably coupled to the motor and LED module 922. In a further embodiment the deployable needle module 924 may be a disposable cartridge module 924 to be removed and disposed after one or more treatments or for each patient, client, or user.

[0065] The SGC 910 may include one or more displays 912A, user input device 912B, handle module interface 914A, and actuator module interface 914C, electrical energy storage module 913, and one or more wheels 916A, 916B. In an embodiment the SGC 910 may be moveable and the wheels 916A, 916B may be lockable to prevent unintentional movement of the SGC 910 once positioned where desired by a user. In another embodiment the SGC 910 may also be coupled to the external power source including an alternating current (AC) grid source.

[0066] In an embodiment the displays 912A may indicate operational parameters for a hand module 920 to be coupled or coupled to the SGC 910. The displays 920 may be touch sensitive so a user may configure one or more operational parameters. In an embodiment the operational parameters may include electrical energy signal intensity to be applied the hand module 920, timing of such energy application, needle deployment timing and depth(s), LED intensity and timing, and number of cycles or shots to be conducted for each actuation via the actuator 930. In an embodiment the actuator 930 may be integral to the SGC 910 or a separate device wireless coupled or wired to the SGC 910 via a cable 914D and the SGC 910 actuator module interface 914C.

[0067] In an embodiment the actuator 930 may a mechanical device including a foot actuator or hand based actuator. The actuator 930 may also be an electronic device having an ASIC or running an application on a device (such as a computer, laptop, PDA, cellphone, or other electronic device) such as the module 780 shown in FIG. 8. In an embodiment the application may enable a user to set or control any of the possible operational parameters of the SGC 910 and initiate actuation a device 920 coupled to the SGC 910. FIG. 9B is a block diagram of a CPU module 911 that may be employed in the SGC 910 according to various embodiments.

Copy provided by USPTO from the IFW Image Database on 05/04/2012

[0068] The CPU module 911 may include a radio frequency (RF) signal generator (RFSG) module 911A, a needle deployment motor controller (NDMC) module 911B, and a photonic signal generator module (PSG) 911C. In an embodiment the photonic signal generator module 911C may be an LED signal generator or controller module 911C. In an embodiment a hand module 920 may include one or more photonic generation devices or modules (922I in FIG. 10A, 10B) where the PSG 911C may generate control or energy signals that cause the photonic modules 922I to generate photons of one or more frequencies with a desired intensity.

[0069] The NDMC 911B may control the deployment of one or more needles 924A of a deployable needle module 924 (FIG. 9C) based on one or more user selected operational parameters. The parameters may determine the depth and duty cycle related to the needle(s) 924A deployment in an embodiment. The signals generated by the NDMC 911B to control needle deployment may vary as a function of motor(s) (922A, FIG. 9C) employed to drive one or more needles 924A. As described above an electrical signal may also be applied to the needle(s) 924A to cause vibration of the needles or enable cutting and coagulation of the tissue in which the needles 924A are deployed. The RFSG 911A may generate one or more electrical signals to be applied to one or more needles 924A based on the selected operational parameters. An electrical signal may be applied to a single needle 924A, group of needles 924A (mono-polar configuration) or pair(s) of needles 924A (bipolar configuration) in an embodiment. In an embodiment the RFSG 911A may apply signals 650, 630, 640, 670 shown in FIGs. 5A, 5B, and 6, a combination thereof, or other signals.

[0070] In an embodiment the CPU module 911 via the RFSG 911A, NDMC 911B, and PSG 911C may create various therapy solutions including various combinations of photonic, electrical, and mechanical (needle deployment) therapy. In a further embodiment the CPU module 911 may control the generation of photonic energy to particular modules 922I, individual or group of needle(s) 924A deployment via one or more motors 922A, and control electrical signal(s) applied to individual or group of needles 924A. Accordingly the DTA 900 may apply various therapies based on user selections via the displays 912A, user selection device 912B, and actuator 930. The CPU 911 may employ the algorithm 930 (FIG. 12) or variations thereof to control the operation of the DTA 900.

[0071] FIG. 9C is a simplified cross-sectional diagram of a cartridge based dermalogical treatment apparatus or hand module 920 with one or more needles 924A retracted according to

Copy provided by USPTO from the IFW Image Database on 05/04/2012

various embodiments. FIG. 9D is a simplified cross-sectional diagram of a cartridge based dermalogical treatment apparatus or hand module 920 with one or more needles 924A deployed according to various embodiments. The handle module 920 may include a deployable needle module (DNM) 924 and a motor and LED module (MLM) 922. In an embodiment the DLM 924 may be a releasably couplable cartridge module. In a further embodiment the DLM 924 may be a detachable cartridge module (DCM) 924 where the DCM may be changed between therapy application(s) or client(s). In a further embodiment, the DCM 924 may be disposed after usage or cleaned via an autoclave or chemical process.

[0072] As shown in FIGs. 9C and 9D, the MLM 922 may include one or more motors 922A, longitudinally extendable drive arms 922B, drive shaft 922C, outer casing 922D, signal interface 922E, photonic generator module 922H, and DCM 924 interface 925 (shown in FIGs. 10A to 10F). The motor(s) 922A and photonic generator module 922H may be electrically coupled to the signal interface 922E to received control signals and energy to operate one or more motors 922A and photonic devices or modules 922I of the photonic generator module 922H. The drive arm(s) 922B may be coupled to one or more drive shafts 922C so the drive shafts may be moved longitudinally to deploy and retract one or more needles 924A when the MLM 922 is operatively coupled to the DNM 924.

[0073] As shown in FIGs. 9C and 9D the deployable needle module 924 may include at least one deployable needle 924A, MLM connecting arm and drive coupling tabs 924B, and MLM connecting/locking arms 924C. The MLM connecting/locking arms 924C may be configured to engage and lock to DCM 924 interface 925 recesses 925D (FIG. 10F). The MLM connecting arm and drive coupling tabs 924B may be configured to disengage connecting/locking arms 924C from the MLM interface 925 when the tabs 924B are depressed inward in an embodiment (as shown in FIG. 10B). The tabs 924B may further displace drive shaft connecting arms 924D inward or centrally when the tabs 924B are depressed inwardly (as also shown in FIG. 10B). When the connecting/locking arms 924C are depressed inwardly or centrally (FIG. 9C and 9D) from an outward position (FIG. 10B). The arms 924C may engage the interface 925 recesses 925D to securely hold the DNM 924 to the MLM 922. The arms 924C may also displace the tabs 924B outwardly and cause the drive shaft connecting arms 924D to return outwardly.

[0074] The drive shaft connecting arms 924D may securely engage the drive shaft 922C tip 922F (FIG. 10E) recess 922G (FIG. 10E) when they return to an outward position as shown in FIG.

Copy provided by USPTO from the IFW Image Database on 05/04/2012

10D and 10E. In this configuration the DNM 924 is securely coupled to the MLM 922 via the arms 924C and 924D. In this configuration the motor(s) 922A via drive shaft(s) 922C coupled to the motor 922A shaft 922B may reliably drive one or more needles 924A of the DNM 924 (from a retracted or deployed position such as shown in FIGs. 9C and 9D, respectively). Further the motor(s) 922A may include steps or infinite drive extension 922B control to enable precise needle deployment depth or extension beyond the DNM 924 shell (924E, Fig. 10A).

[0075] FIG. 10A-10D are simplified, partial, cross-sectional diagrams of the DNM 924 in various stages of attachment to the MLM 922 via the arms 924C and 924D according to various embodiments. As shown in FIG. 10A the DNM or DCM 924 is decoupled from the MLM 922. The MLM 922 includes the photonic generator module (PGM) 922H, interface 925, and drive shaft tip 922F in a distal portion. As shown in FIG. 10A the PGM 922H may include one or more photon modules 922I. The photon modules 922I may be LED modules and emit photon with various frequencies and intensities based on the PSG 911C control signal.

[0076] As shown in FIG. 10A the DNM or DCM 924 may include the connecting arms 924C, deflecting tabs 924B, drive shaft coupling arms 924D, outer shell 924E, and one or more needles 924A. In an embodiment the drive shaft coupling arms 924D may include tabs that may securely engage the drive shaft tip 922F recess 922G. The drive shaft coupling arms 924D may be returnably deflectable inwardly (as shown in FIG. 10B) via inward depression of the tabs 924B. Such inward depression of the tabs 924B may deflect the coupling arms 924C outward. Similarly, inward depression of the coupling arms 924C to engage the interface 925 recesses 925D securely may deflect the tab arms 924B outwardly (relative the central axis of the DNM 920). Such outward movement may enable the drive shaft coupling arms 924D to return to a non-deflected state as shown in FIG. 10A.

[0077] In an embodiment a DNM or DCM 924 may be securely coupled to a MLM 922 by first completely compressing the arms or tabs 924B as shown in FIG. 10B. As noted above such inward compression may cause the coupling arms 924C to deflect outwardly and the drive shaft coupling arms 924D to be deflected inwardly towards each other. The drive shaft coupling arms 924D may be compressed so they may fit within the drive shaft 922C tip 922F recess 922G as the DNM or DCM 924 is advanced toward the MLM 922 distal end to securely couple the DNM 924 to the MLM 922 (as shown in FIG. 10D). After the DNM or DCM 924 is placed over the MLM 922 distal end so the drive shaft coupling arms 924D are located within the drive shaft 922C tip 922F

Copy provided by USPTO from the IFW Image Database on 05/04/2012

recess 922G and the coupling arms 924C are adjacent the MLM 922 interface 925 recesses 925D as shown in FIG. 10C.

[0078] To complete the coupling of a DNM 924 to the MLM 922, the coupling arms 924C may compressed inwardly as shown in FIG. 10D. The compression of the coupling arms 924C may deflect the tabs or arms 924B outwardly. Such outward deflection of the arms 924B may enable the drive shaft coupling arms 924D to return to a non-deflected state and securely engage the MLM 922 drive shaft 922C tip 922F recess 922G (as shown in FIG. 10D). In an embodiment a single coupling arm 924C, drive shaft coupling arm 924D, and tab 924B may be employed in an DNM 924. After the secure coupling of the DNM 924 to the MLM 922, the MLM 922 via the motor(s) 922A may controllable deploy one or more needles 924A as shown in FIG. 10E. FIG. 10F is a simplified cross-sectional diagram of a DNM interface 925 according to various embodiments.

[0079] As noted the interface 925 may include one or more recesses 925D to be securely engaged to DNM 924 coupling arms 924C. The interface 925 may also include several fenestrations or openings 925A, 925B, 925C. The central fenestration 925A may be sized to enable passage of the MLM 922 drive shaft 922C tip 922F. The fenestrations 925C may be sized and located above one or more photon modules 922I to enable photons generated by the photon modules 922I to pass into the DNM 924. In an embodiment the DNM 924 outer casing 924E may be translucent and act as a waveguide to communicate photons to the needle area of the DNM 924. The fenestrations 925B may be sized and configured to enable electrical coupling pins 924G (FIG. 11A) passage from the DNM 924 to electrical couplings of the MLM 922. The pins 924G may communicate electrical signals from the RFSG 911A to one or more needles 924A via the wires 914B and MLM 922.

[0080] FIG. 11A is a simplified, partial, cross-sectional diagram of DNM 924 coupled to a MLM 922 with needles 924A deployed according to various embodiments. As shown in FIG. 11A, the DNM 924 may further include electrical coupling pins 924G set with a spring loaded base 924H (in an embodiment). As noted the pins 924G may extend to electrical contacts in the MLM 922 via the interface 925 fenestrations 925B. Along a pair of pins 924G is shown, one or more pins 924G may be employed in a DNM 924 according to various embodiments. A drive shaft coupling arm 924D may include an offset 924I where the offset may be configured to engage a tab or arm 924B.

[0081] As shown in FIG. 11A when the needle array or assemble 924F is deployed depression of the tabs 924B inwardly will not engage the drive shaft coupling arms 924D (via the offsets 924I). Such a configuration may prevent unintentional decoupling of the DNM 924 to the

Copy provided by USPTO from the IFW Image Database on 05/04/2012

MLM 922 when the needle assembly 924F is at least partially deployed. As shown in FIG. 11A, the electrical contact pin 924G is sized to fit within the spring loaded based 924H. In an embodiment the internal spring 924M is may force extension of the pin 924G to maintain electrical conduction with the MLM 922 as the needle assembly 924F is moved (recessed and deployed to various depths). FIG. 11B is a simplified, cross-sectional diagram of a DNM 924 needle assembly 924F according to various embodiments. FIG. 11C is a simplified, cross-sectional, exploded diagram of the DNM 924 needle assembly 924F according to various embodiments. As shown in FIGs. 11B and 11C, the needle assembly 924F may include a pin cover 924J, drive arm module 924L, needles 924A, pins 924G with bases 924H, and needle printed circuit board (PCB) 924K.

[0082] In an embodiment the PCB 924K may couple one or more needles 924A to a first pin 924G base 924H and another one or more needles 924A to another pin 924G based 924H. The first pin 924G and second pin 924H may couple alternating rows or columns of needles 924A to form one or more dipoles between such needles 924A. The drive shaft coupling arms 924D may have a base 924L where the cover 924J includes fenestrations for the needles 924A, a recess for the PCB 924K, and an outer recess for the coupling arm base 924L (as shown assembled in FIG. 11B).

[0083] FIG. 12 is a flow diagram illustrating a DTA 900 processing algorithms 930 according to various embodiments. As noted the DTA 900 SGC 911 RFSG 911A, NDMC 911B, and PSG 911C may enable a user or clinician to select a variety of operational parameters to deliver a desired combination of electrical, light (photonic), and mechanical (needle) therapy to dermalogical tissue. In the algorithm 930, a user may select different operational modes including cut (activities 932A to 932F), blend (activities 934A to 934F), and coagulation (activities 936A to 936F) in an embodiment. In a cut operational mode, a user may select the electrical signal intensity (activity 932B) and application time (activity 932C). The CPU 911 may determine the total energy that will be applied for each activation based on the selected intensity and time (total fluence – activity 932D). Then, upon activation (activity 932E, 932F) the DTA 900 may energize the MLM 922 based on the operational parameters.

[0084] In a blend operational mode (activity 934A), a user may select the electrical signal intensity, start delay, and duty cycle (activity 934B) and needle deployment depth and number of shots per activation (activity 934C). The duty cycle may include the delay before energy and need deployment, the time the energy and needles are deployed, and the subsequent off or rest time before the next possible duty cycle. As noted above the motor(s) 922A may enable precise needle

Copy provided by USPTO from the IFW Image Database on 05/04/2012

extension (effective depth) control. In an embodiment the motor(s) 922A may include a transverse motor that converts rotational force to longitudinal force. The motor may be a Haydon model number: 21H4AB-05-049 having a motor speed of about 0.005mm/msec and motor power of about 1000 Hz approximately 40N (Newton) (described in detail at www.haydonkerk.com and whose specifications are incorporated by reference).

[0085] The CPU 911 may determine the total energy that will be applied for each activation based on the selected intensity and duty cycle (total fluence – activity 934D). Then, upon activation (activity 934E, 934F) the DTA 900 may energize the MLM 922 based on the operational parameters and deploy the needle assembly 924F to a desired extension beyond the DNM 924 shell 924E to enable a desired depth of needle 924A penetration within tissue when the shell 924E is placed adjacent the tissue.

[0086] In a coagulation operational mode (activity 936A), a user may select the electrical signal intensity and start delay (activity 936B) and needle deployment depth and number of shots per activation (activity 936C). As noted above the motor(s) 922A may enable precise needle extension (effective depth) control. The CPU 911 may determine the total energy that will be applied for each activation based on the selected intensity (total fluence – activity 936D). Then, upon activation (activity 936E, 936F) the DTA 900 may energize the MLM 922 based on the operational parameters and deploy the needle assembly 924F to a desired extension beyond the DNM 924 shell 924E to enable a desired depth of needle 924A penetration within tissue when the shell 924E is placed adjacent the tissue.

[0087] Applications that may include the novel apparatus and systems of various embodiments include electronic circuitry used in high-speed computers, communication and signal processing circuitry, modems, single or multi-processor modules, single or multiple embedded processors, data switches, and application-specific modules, including multilayer, multi-chip modules. Such apparatus and systems may further be included as sub-components within a variety of electronic systems, such as televisions, cellular telephones, personal computers (e.g., laptop computers, desktop computers, handheld computers, tablet computers, etc.), workstations, radios, video players, audio players (e.g., mp3 players), vehicles, medical devices (e.g., heart monitor, blood pressure monitor, etc.) and others. Some embodiments may include a number of methods.

Copy provided by USPTO from the IFW Image Database on 05/04/2012

[0088] It may be possible to execute the activities described herein in an order other than the order described. Various activities described with respect to the methods identified herein can be executed in repetitive, serial, or parallel fashion.

[0089] A software program may be launched from a computer-readable medium in a computer-based system to execute functions defined in the software program. Various programming languages may be employed to create software programs designed to implement and perform the methods disclosed herein. The programs may be structured in an object-orientated format using an object-oriented language such as Java or C++. Alternatively, the programs may be structured in a procedure-orientated format using a procedural language, such as assembly or C. The software components may communicate using a number of mechanisms well known to those skilled in the art, such as application program interfaces or inter-process communication techniques, including remote procedure calls. The teachings of various embodiments are not limited to any particular programming language or environment.

[0090] The accompanying drawings that form a part hereof show, by way of illustration and not of limitation, specific embodiments in which the subject matter may be practiced. The embodiments illustrated are described in sufficient detail to enable those skilled in the art to practice the teachings disclosed herein. Other embodiments may be utilized and derived therefrom, such that structural and logical substitutions and changes may be made without departing from the scope of this disclosure. This Detailed Description, therefore, is not to be taken in a limiting sense, and the scope of various embodiments is defined only by the appended claims, along with the full range of equivalents to which such claims are entitled.

[0091] Such embodiments of the inventive subject matter may be referred to herein individually or collectively by the term "invention" merely for convenience and without intending to voluntarily limit the scope of this application to any single invention or inventive concept, if more than one is in fact disclosed. Thus, although specific embodiments have been illustrated and described herein, any arrangement calculated to achieve the same purpose may be substituted for the specific embodiments shown. This disclosure is intended to cover any and all adaptations or variations of various embodiments. Combinations of the above embodiments, and other embodiments not specifically described herein, will be apparent to those of skill in the art upon reviewing the above description.

Copy provided by USPTO from the IFW Image Database on 05/04/2012

[0092] The Abstract of the Disclosure is provided to comply with 37 C.F.R. §1.72(b), requiring an abstract that will allow the reader to quickly ascertain the nature of the technical disclosure. It is submitted with the understanding that it will not be used to interpret or limit the scope or meaning of the claims. In the foregoing Detailed Description, various features are grouped together in a single embodiment for the purpose of streamlining the disclosure. This method of disclosure is not to be interpreted to require more features than are expressly recited in each claim. Rather, inventive subject matter may be found in less than all features of a single disclosed embodiment. Thus the following claims are hereby incorporated into the Detailed Description, with each claim standing on its own as a separate embodiment.

Copy provided by USPTO from the IFW Image Database on 05/04/2012

Claims

What is claimed is:

1. A method of treating dermalogical tissue, comprising:

placing a device including a distal end including a plurality of extendable needles from a device distal end surface on or near dermalogical tissue to be treated;

energizing a motor coupled to the extendable needles to cause at least one needle to extend a desired distance from the distal end surface; and

energizing the at least one needle via a signal generator electrically coupled to the at least one needle to cause vibration of the at least one needle.

2. The method of claim 1, further comprising placing a dermalogical chemical one of on at least a portion of the dermalogical tissue, at least a portion of the inner surface, and the at least one needle.

3. The method of claim 1, wherein the device further includes a proximal handle and a releasably couplable deployable needle assembly, the extendable needles located in the needle assembly.

4. The method of claim 3, wherein the proximal handle includes the needle deploying motor.

5. The method of claim 4, wherein the proximal handle further includes at least one embedded LED therein and further including energizing the LED when the signal generator is energized.

6. The method of claim 5, comprising energizing the LED to generate one of a blue and an infra-red photonic signal.

7. The method of claim 4, wherein the needle deploying motor is coupled the needle assembly via a drive shaft.

Copy provided by USPTO from the IFW Image Database on 05/04/2012

8. The method of claim 5, wherein the releasably couplable deployable needle assembly includes a translucent section to communicate the photon signal to the at least one needle.

9. The method of claim 3, further comprising employing an RF signal generator electrically coupled to the at least one needle to generate a signal that causes vibration of the at least one needle.

10. The method of claim 3, wherein tissue penetration by the at least one needle creates a micro-wound and further comprising employing an RF signal generator electrically coupled to the at least one needle to generate a signal that causes vibration of the at least one needle sufficient to increase the tissue micro-wound.

11. An apparatus for treating dermalogical tissue, comprising:

a device including a distal end and a plurality of extendable needles, at least one needle extendable from the device distal end surface;

a motor coupled to at least one needle that causes the at least one needle to extend a desired distance from the distal end surface when energized with a particular signal; and

a signal generator electrically coupled to the at least one needle to cause vibration of the at least one needle when the at least one needle energized with a particular signal.

12. The apparatus of claim 11, wherein the device includes a proximal end couplable to the signal generator.

13. The apparatus of claim 11, wherein the device further includes a proximal handle and a releasably couplable deployable needle assembly, the extendable needles located in the needle assembly.

14. The apparatus of claim 12, wherein the proximal handle includes the motor.

15. The apparatus of claim 14, wherein the proximal handle further includes at least one embedded LED therein and further including a photonic signal generator electrically coupled to the least one embedded LED.

Copy provided by USPTO from the IFW Image Database on 05/04/2012

16. The apparatus of claim 15, wherein the at least one embedded LED generates one of a blue and an infra-red photonic signal.

17. The apparatus of claim 14, further comprising a drive shaft coupling the motor to the at least one needle.

18. The apparatus of claim 15, wherein the releasably couplable deployable needle assembly includes a translucent section that communicates photon signals.

19. The apparatus of claim 13, further comprising an RF signal generator electrically coupled to the at least one needle, the RF signal generator causing vibration of the at least one needle when the needle is energized with a particular signal.

20. The apparatus of claim 13, wherein tissue penetration by the at least one needle creates a micro-wound and further comprising an RF signal generator electrically coupled to the at least one needle, the RF signal generator causing vibration of the at least one needle when the needle is energized with a particular signal sufficient to increase the tissue micro-wound.

Copy provided by USPTO from the IFW Image Database on 05/04/2012

METHOD, SYSTEM, AND APPARATUS FOR DERMALOGICAL TREATMENT

Abstract of the Disclosure

Embodiments of dermalogical cell treatment are described generally herein. Other embodiments may be described and claimed.

Copy provided by USPTO from the IFW Image Database on 05/04/2012

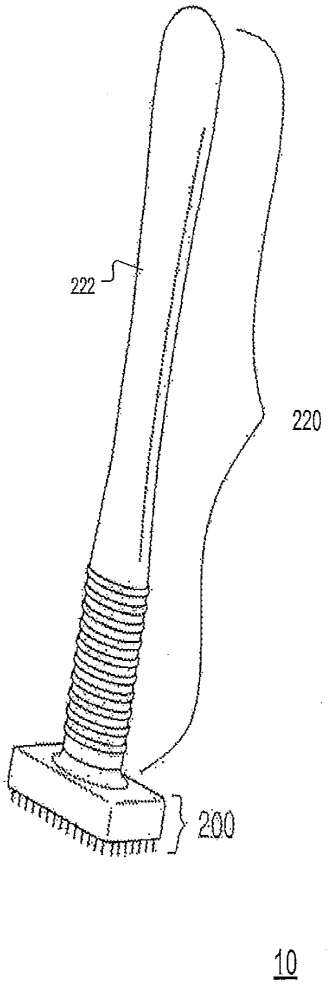

FIGURE 1A

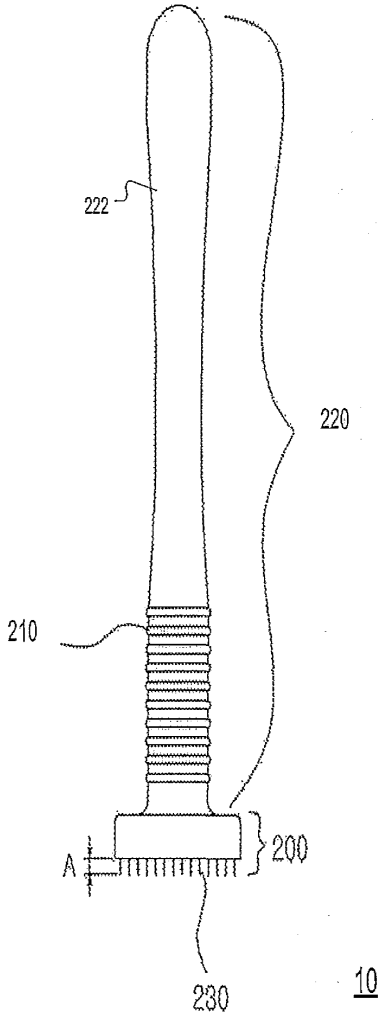

FIGURE 1B

Copy provided by USPTO from the IFW Image Database on 05/04/2012

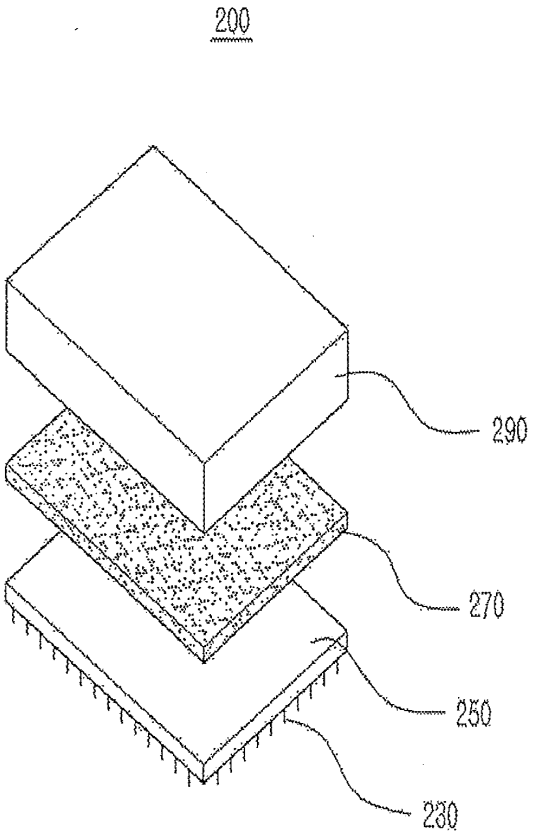

FIGURE 1C

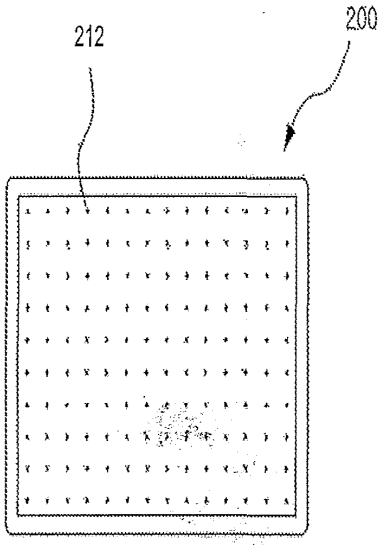

FIGURE 1D

Copy provided by USPTO from the IFW Image Database on 05/04/2012

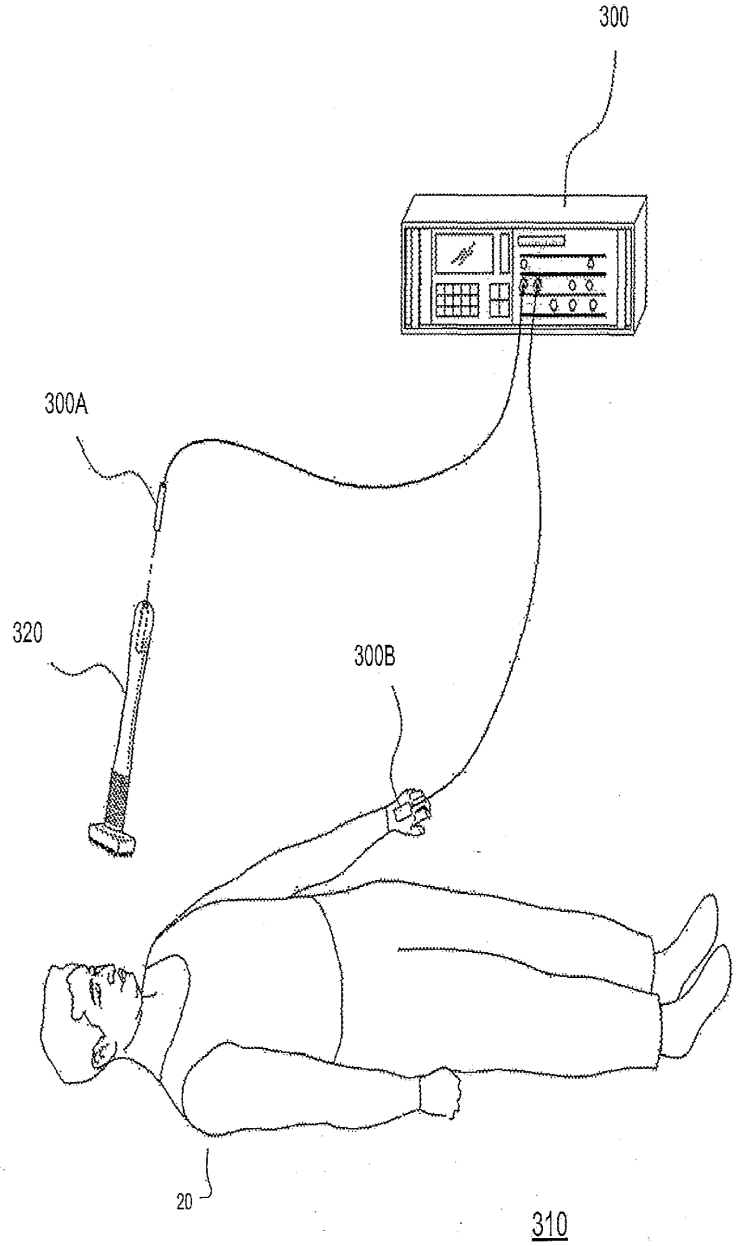

FIGURE 2A

Copy provided by USPTO from the IFW Image Database on 05/04/2012

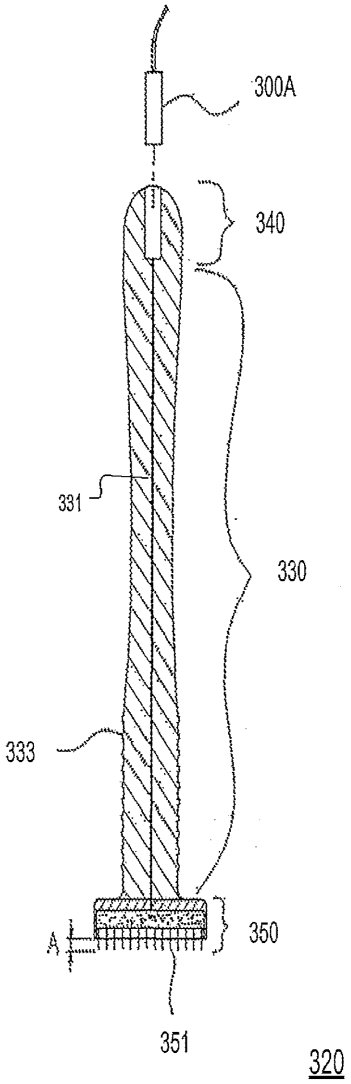

FIGURE 2B

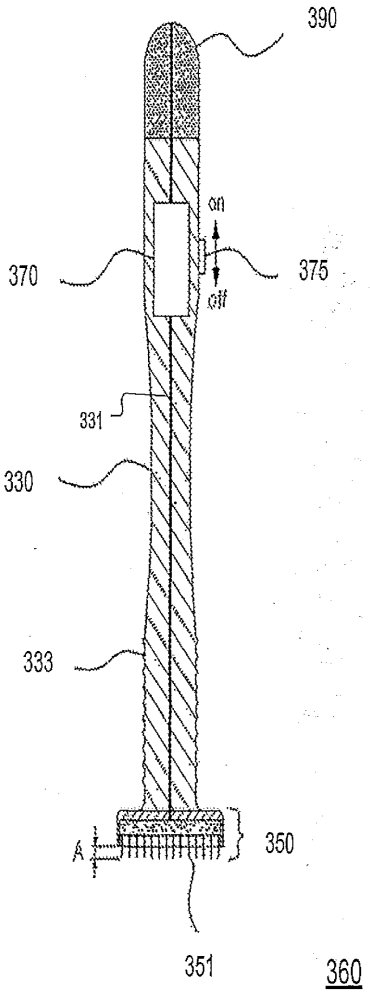

FIGURE 2C

Copy provided by USPTO from the IFW Image Database on 05/04/2012

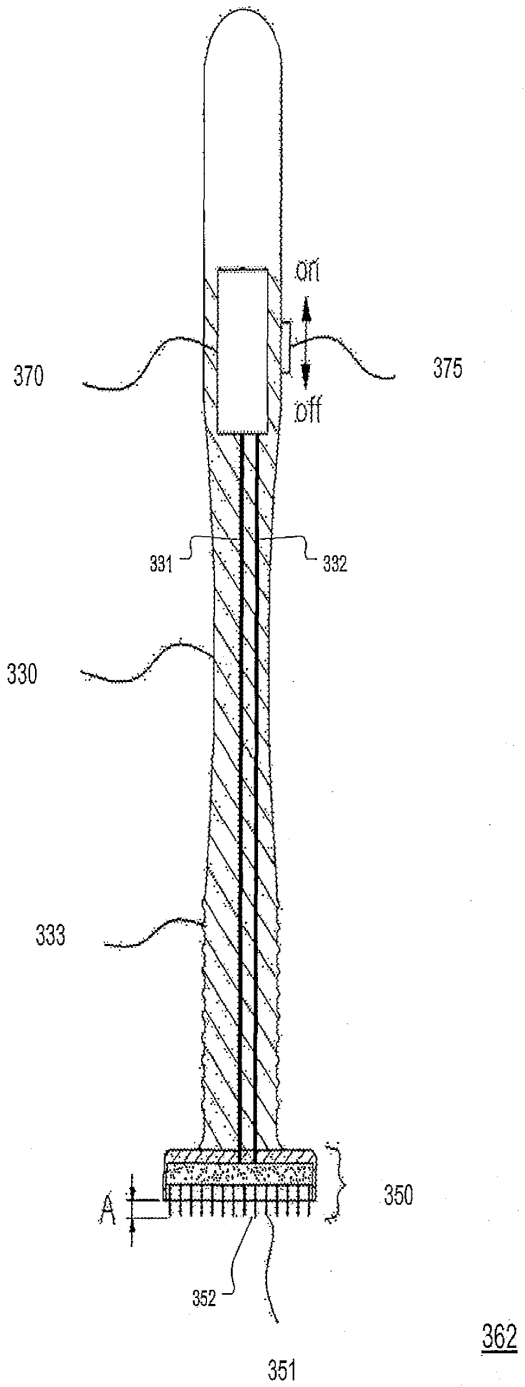

FIGURE 2D

Copy provided by USPTO from the IFW Image Database on 05/04/2012

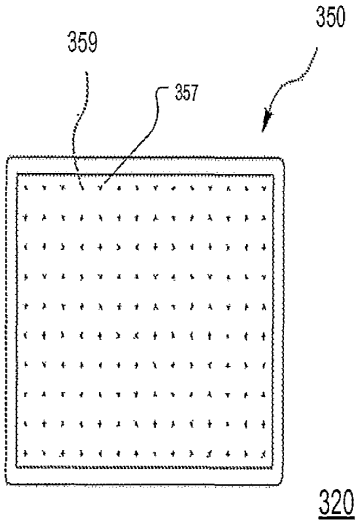

FIGURE 2E

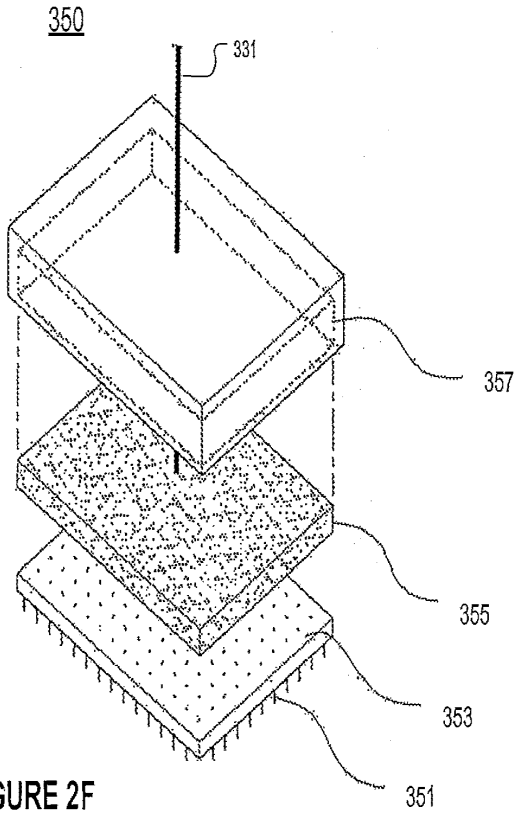

FIGURE 2F

Copy provided by USPTO from the IFW Image Database on 05/04/2012

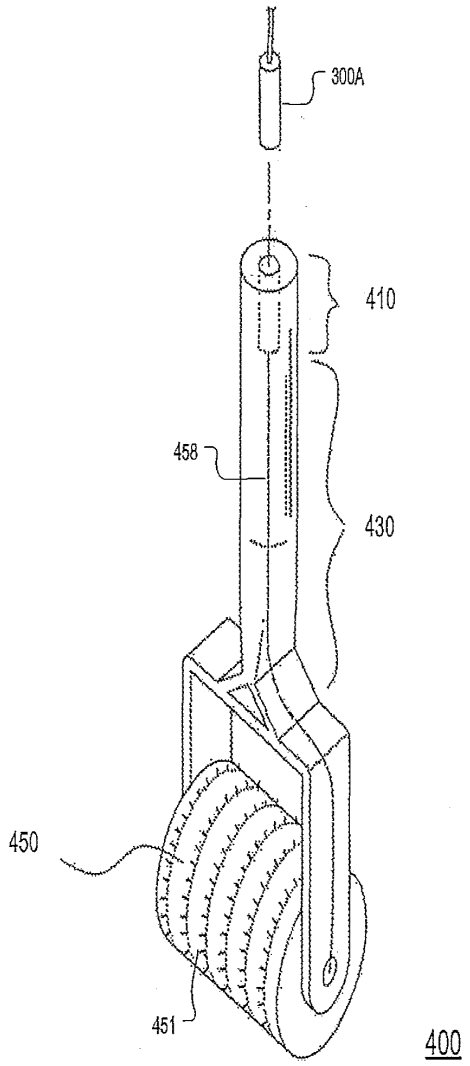

FIGURE 3A

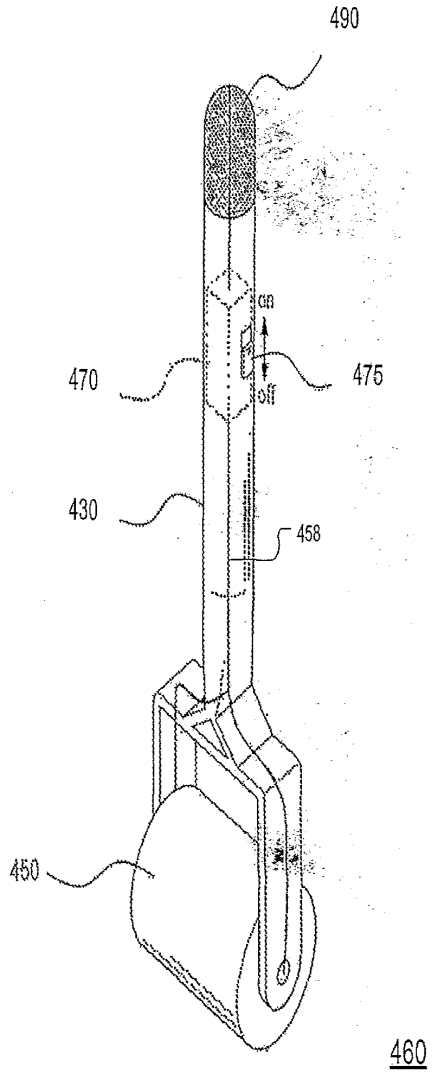

FIGURE 3B

Copy provided by USPTO from the IFW Image Database on 05/04/2012

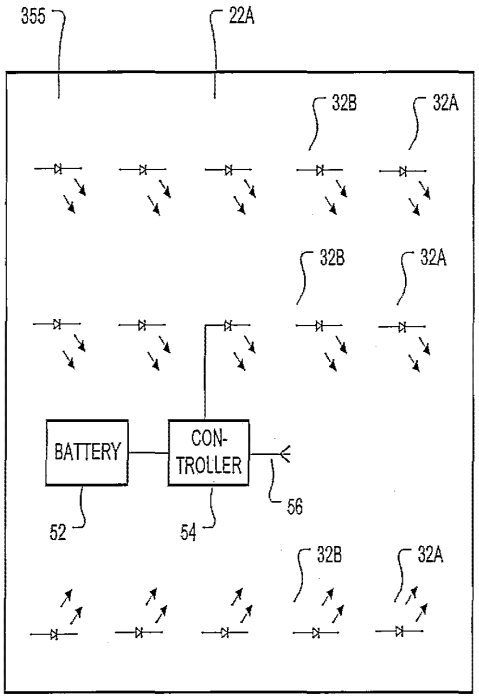

FIGURE 4A 520

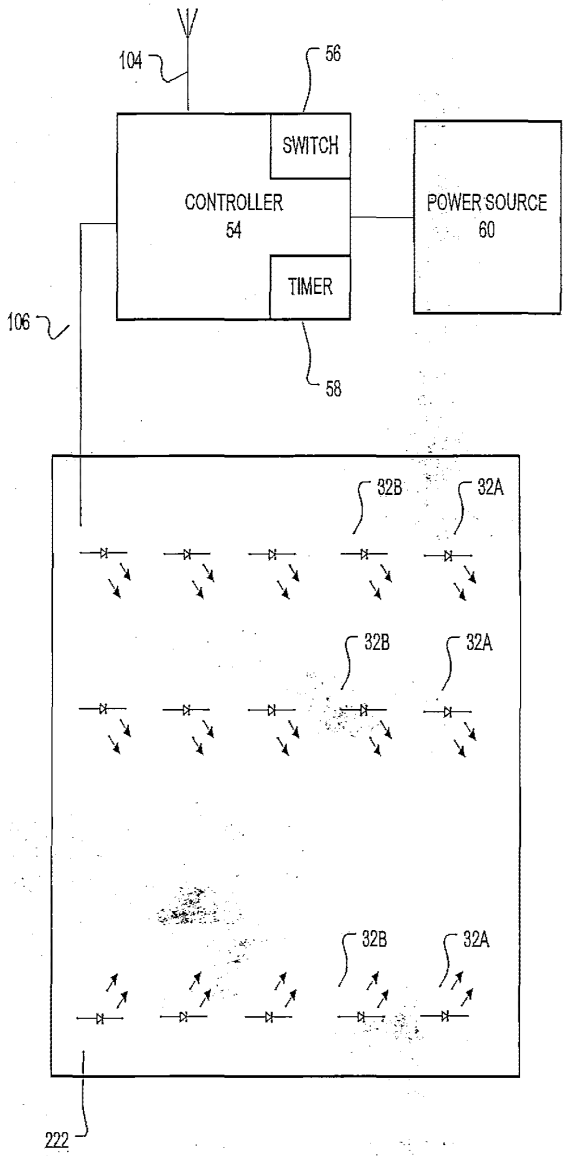

FIGURE 4B 510

Copy provided by USPTO from the IFW Image Database on 05/04/2012

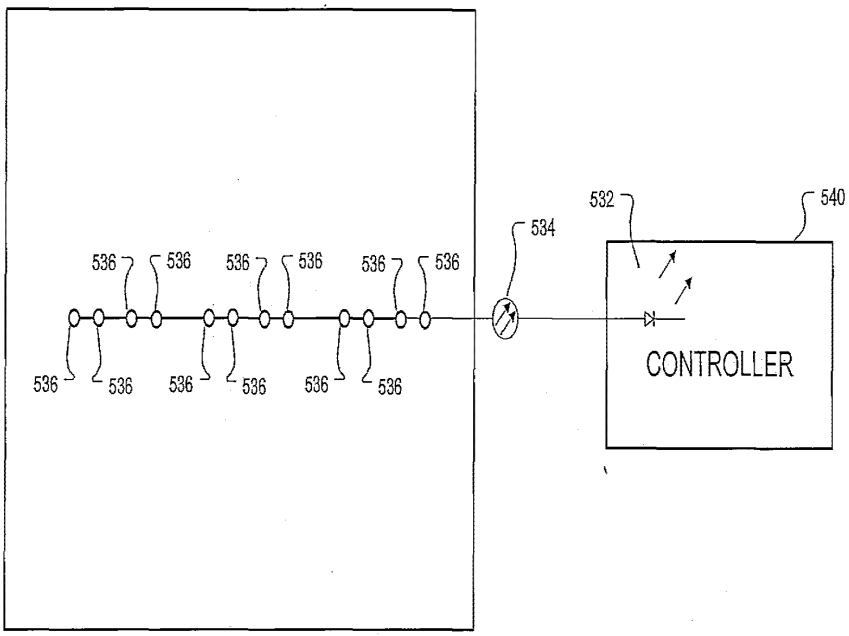

530

FIGURE 4C

Copy provided by USPTO from the IFW Image Database on 05/04/2012

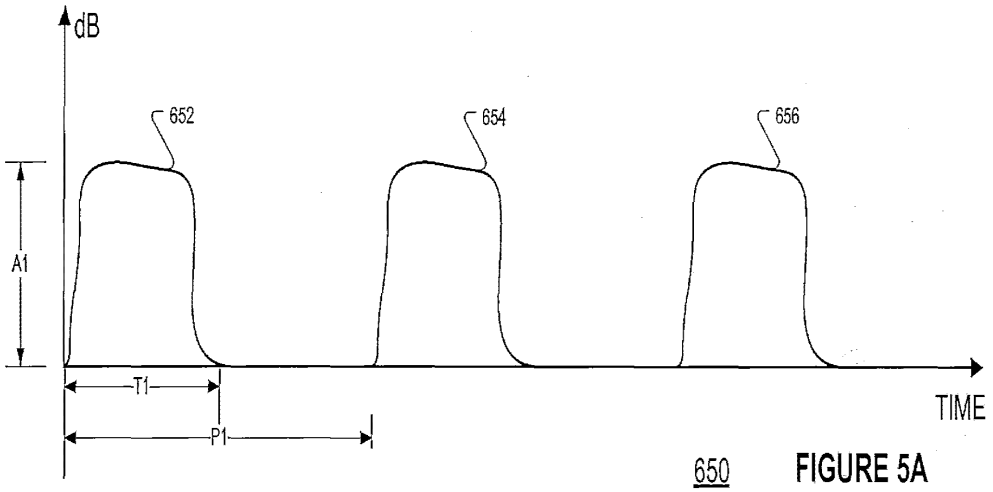

FIGURE 5A

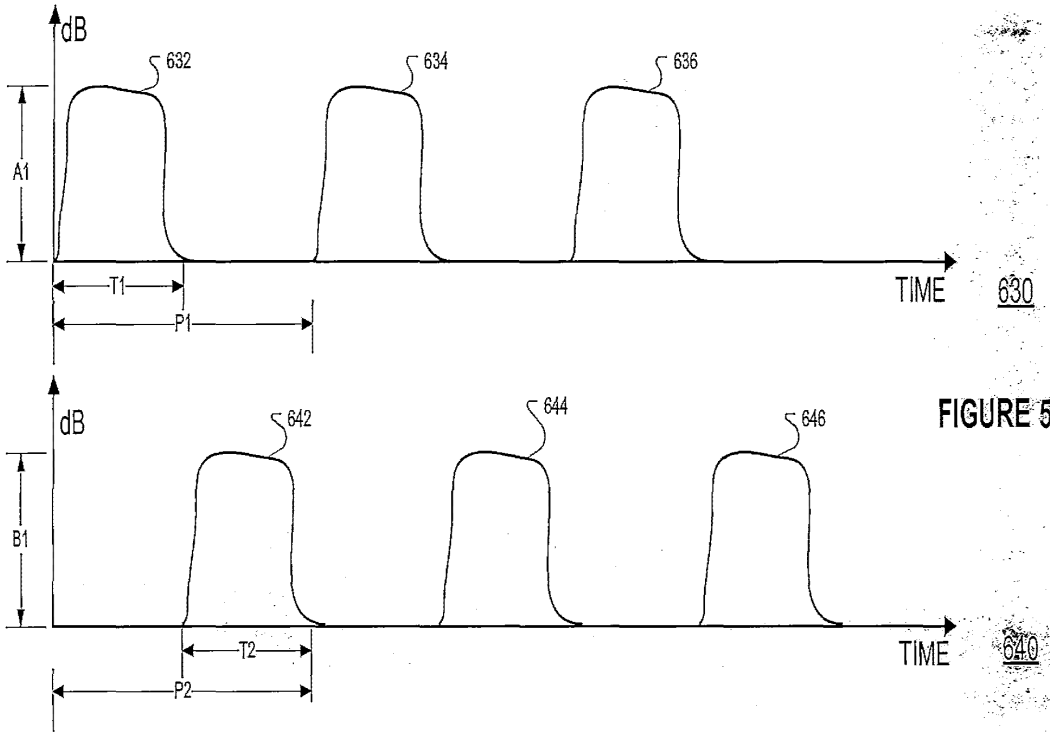

FIGURE 5B

Copy provided by USPTO from the IFW Image Database on 05/04/2012

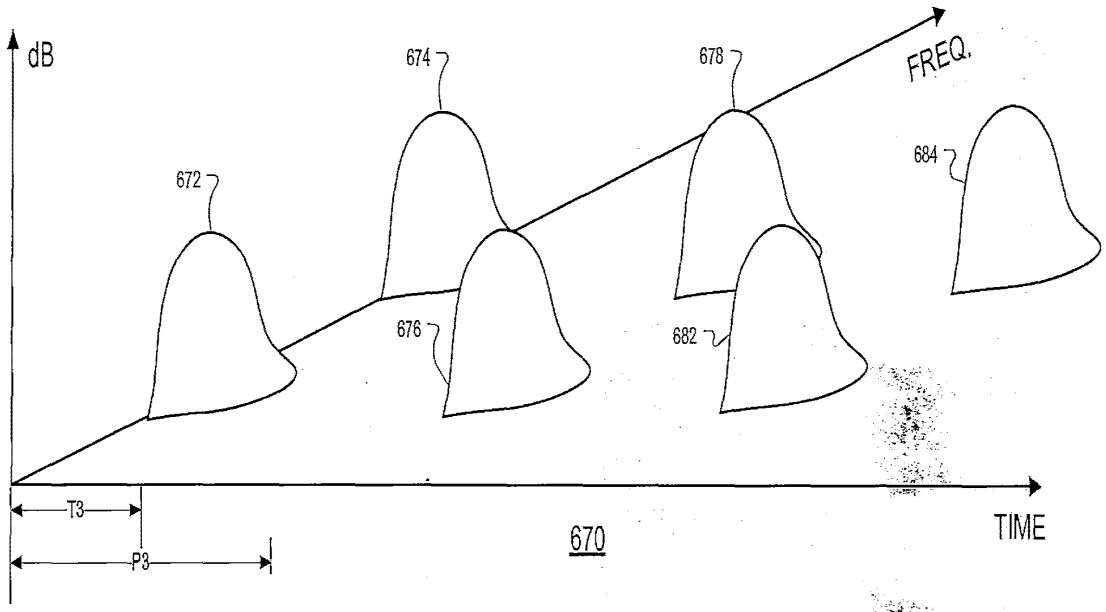

FIGURE 6

Copy provided by USPTO from the IFW Image Database on 05/04/2012

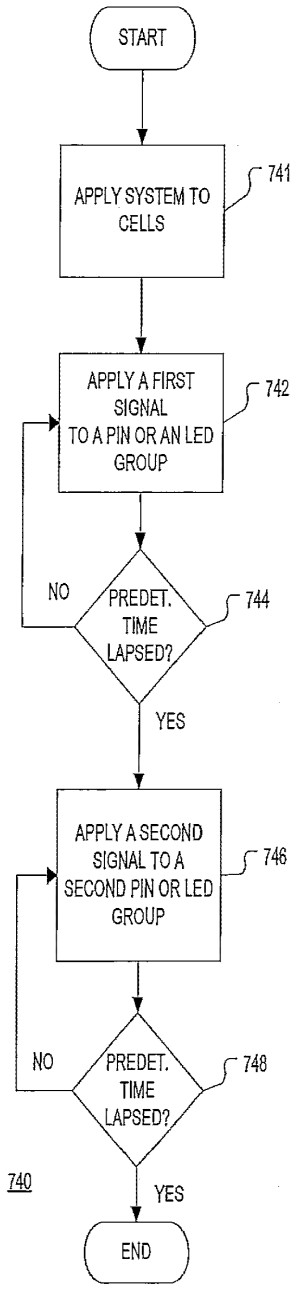

FIGURE 7A

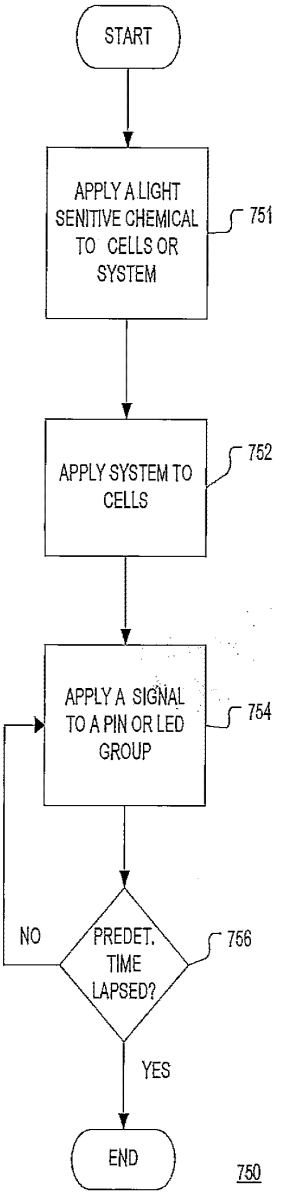

FIGURE 7B

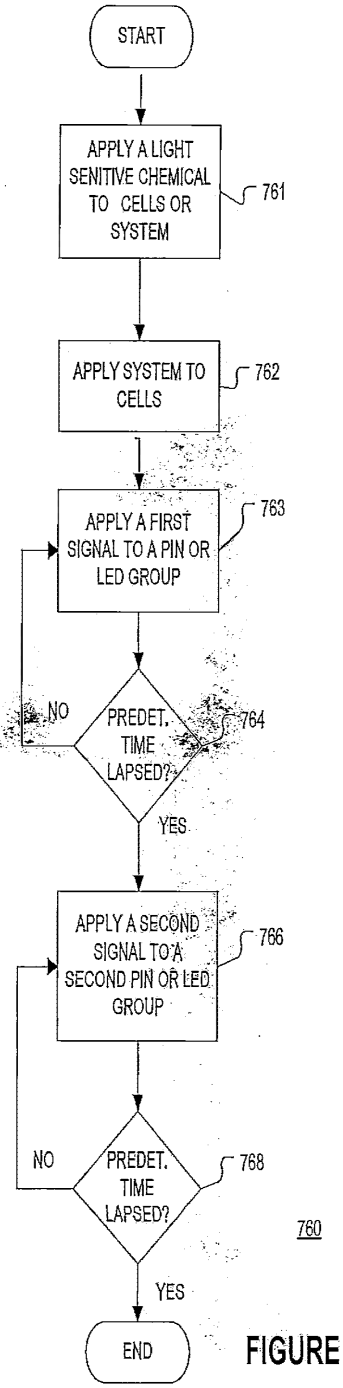

FIGURE 7C

Copy provided by USPTO from the IFW Image Database on 05/04/2012

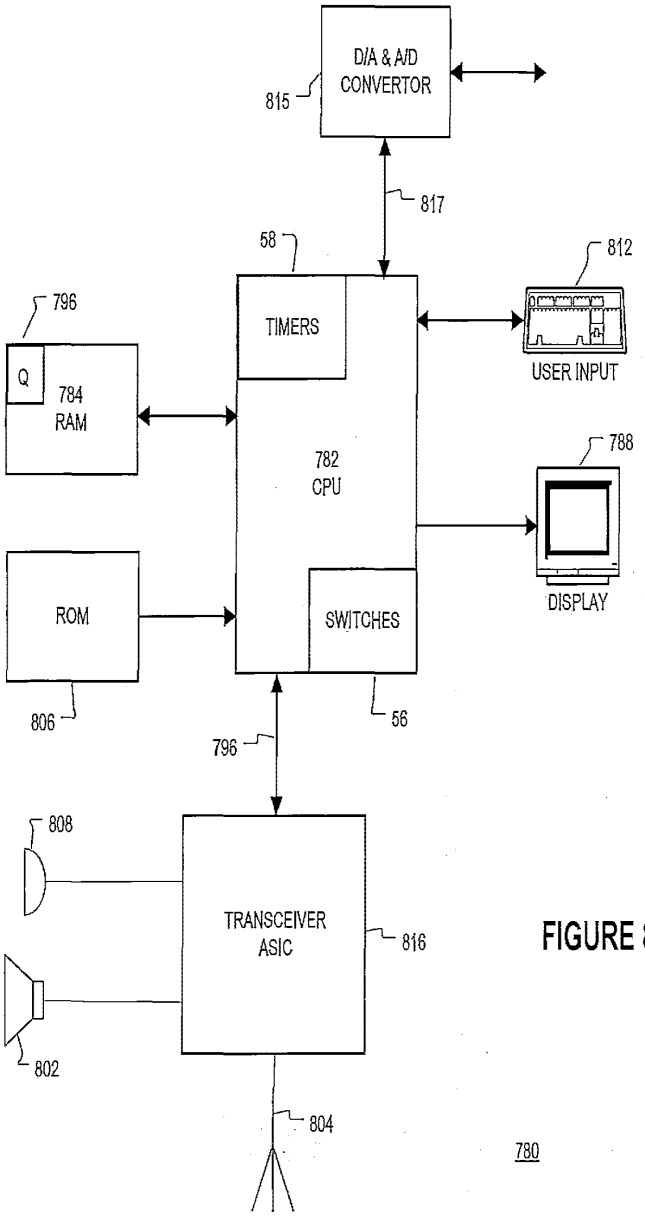

FIGURE 8

Copy provided by USPTO from the IFW Image Database on 05/04/2012

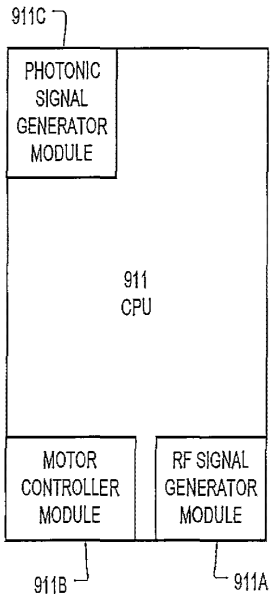

FIGURE 9B

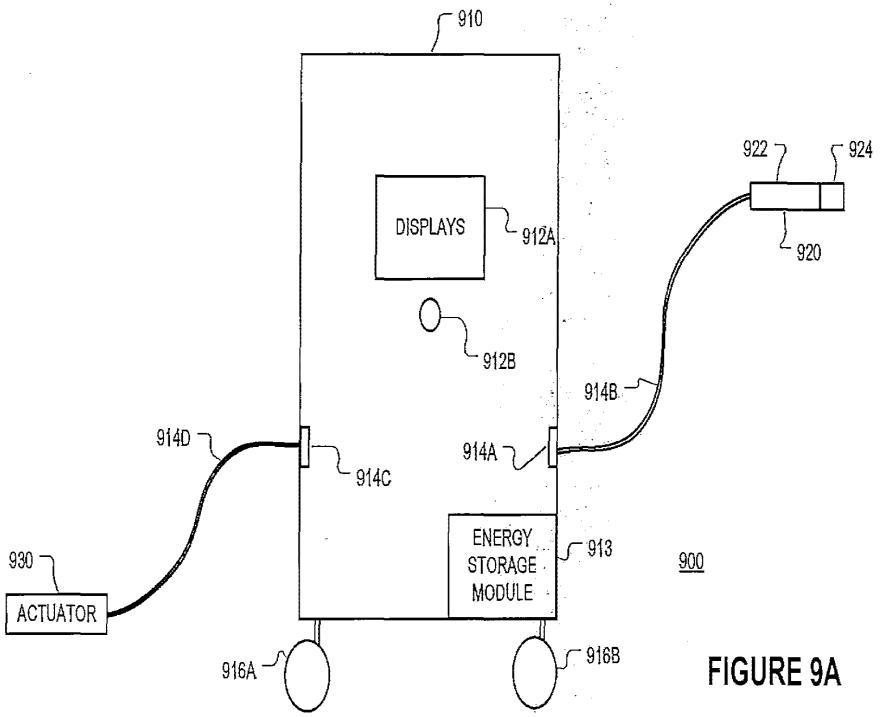

FIGURE 9A

Copy provided by USPTO from the IFW Image Database on 05/04/2012

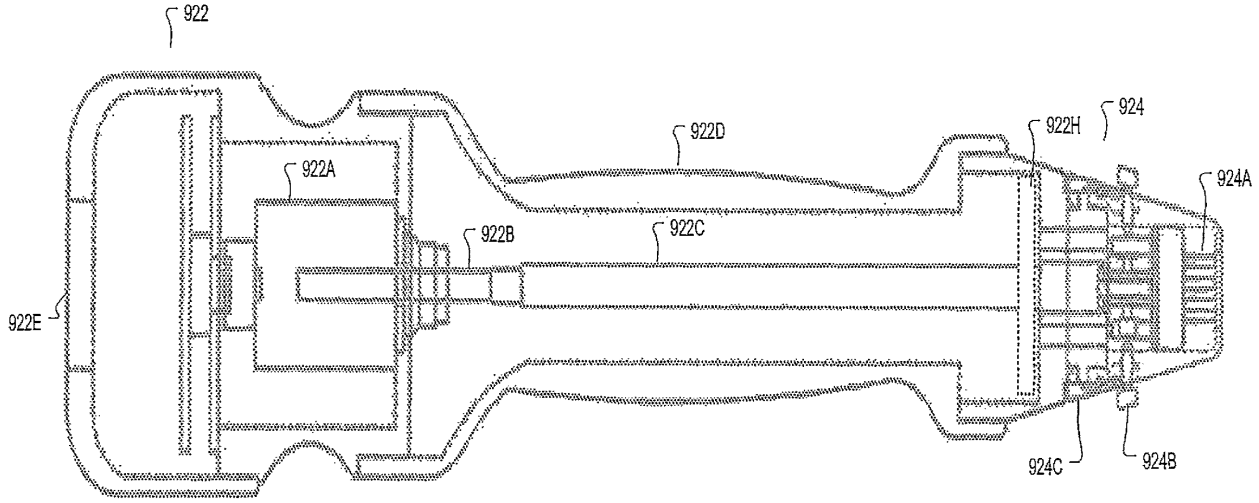

920

FIGURE 9C

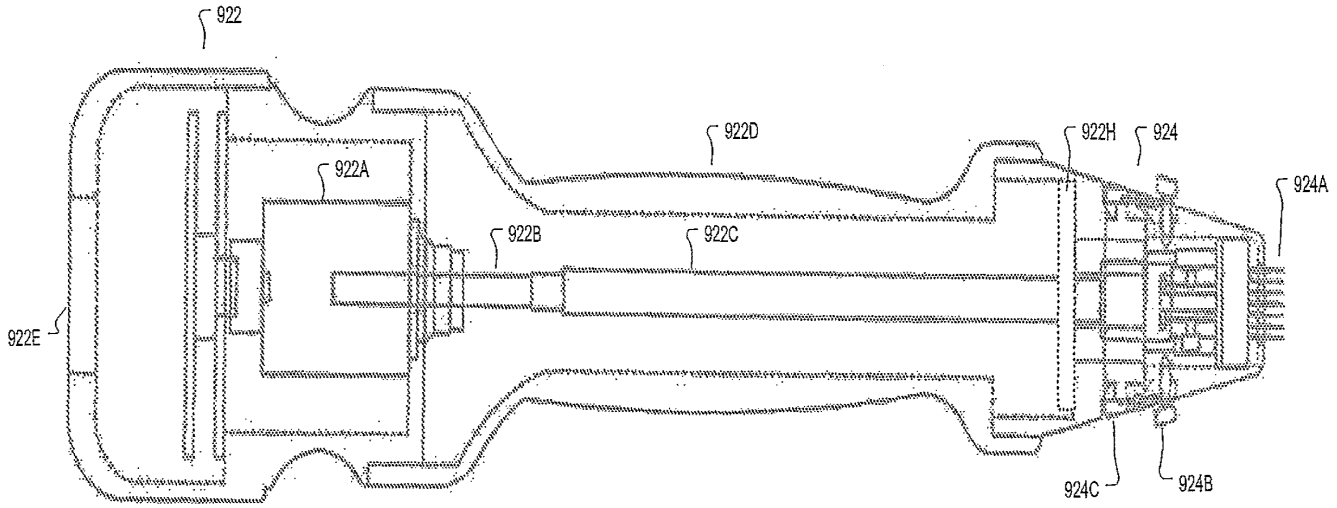

920

FIGURE 9D

Copy provided by USPTO from the IFW Image Database on 05/04/2012

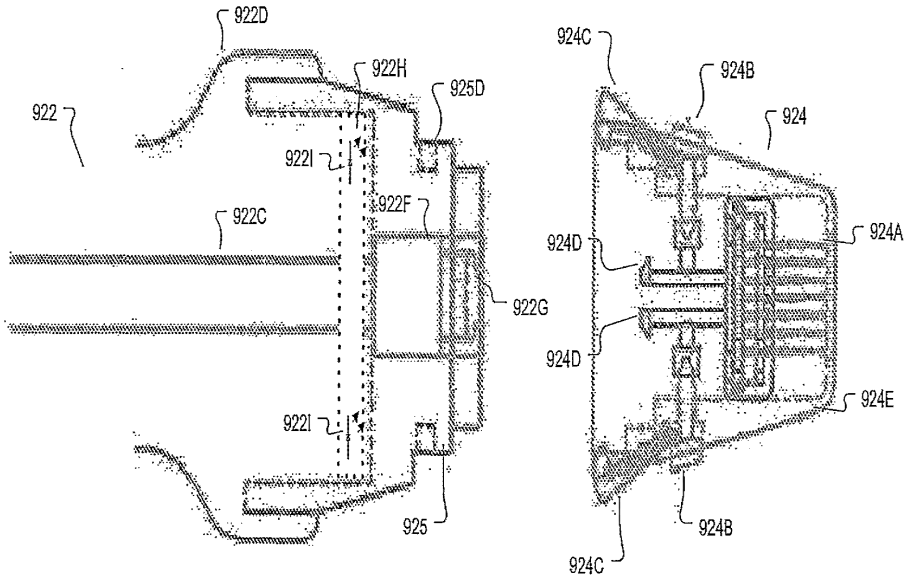

FIGURE 10A

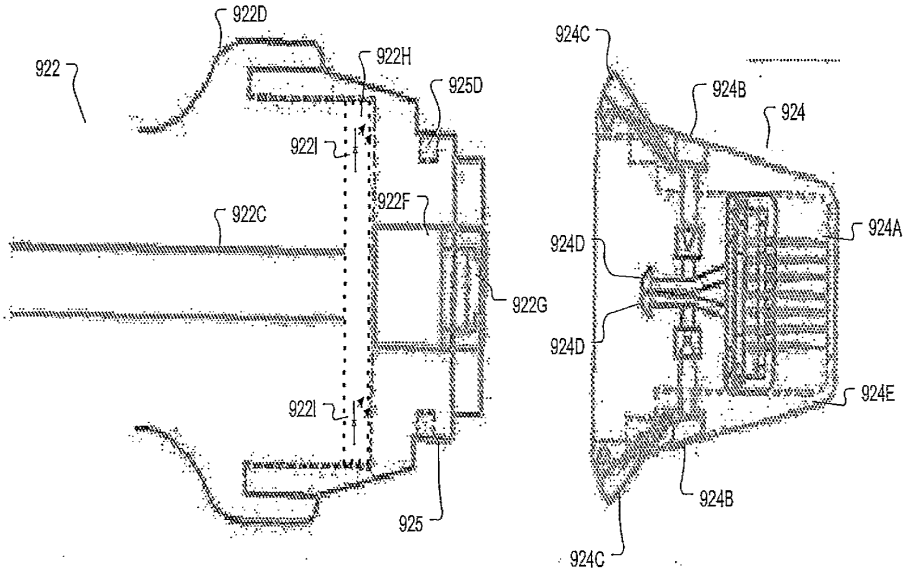

FIGURE 10B

Copy provided by USPTO from the IFW Image Database on 05/04/2012

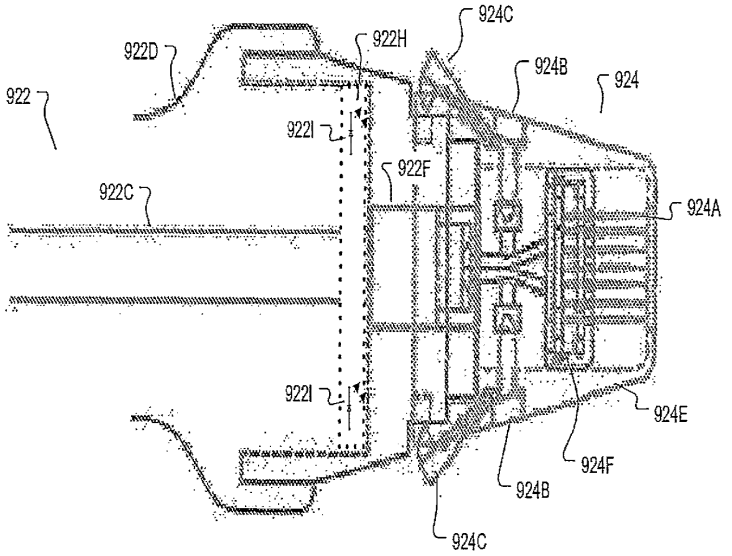

FIGURE 10C

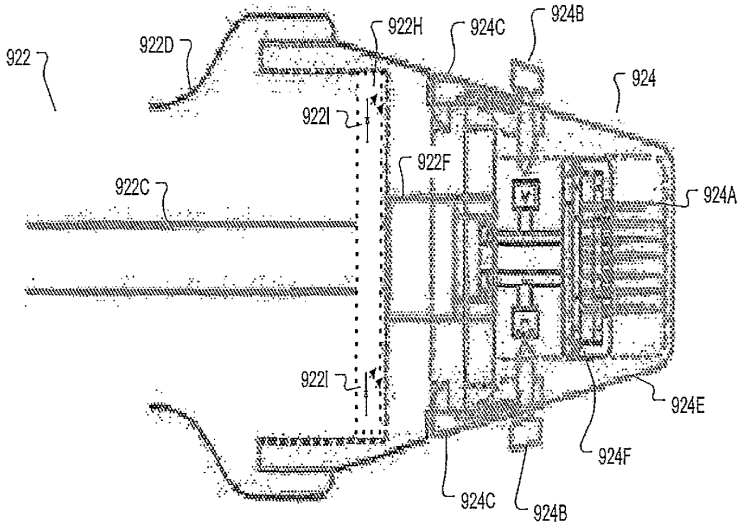

FIGURE 10D

Copy provided by USPTO from the IFW Image Database on 05/04/2012

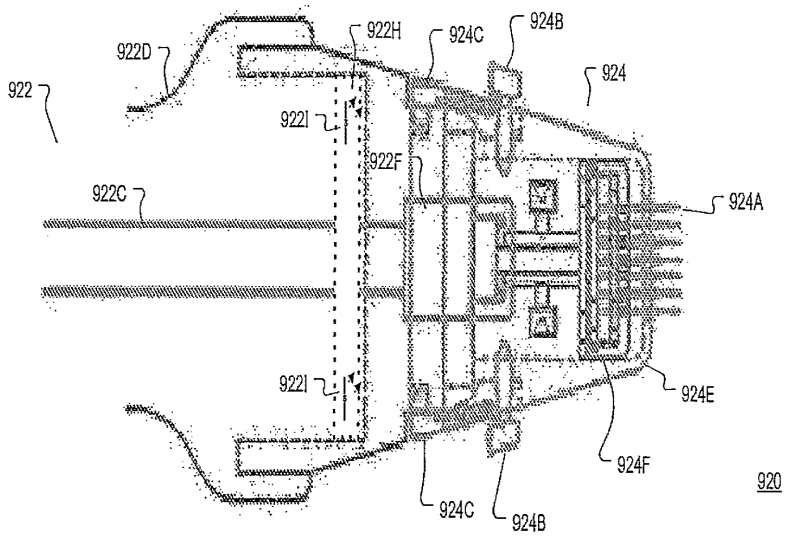

FIGURE 10E

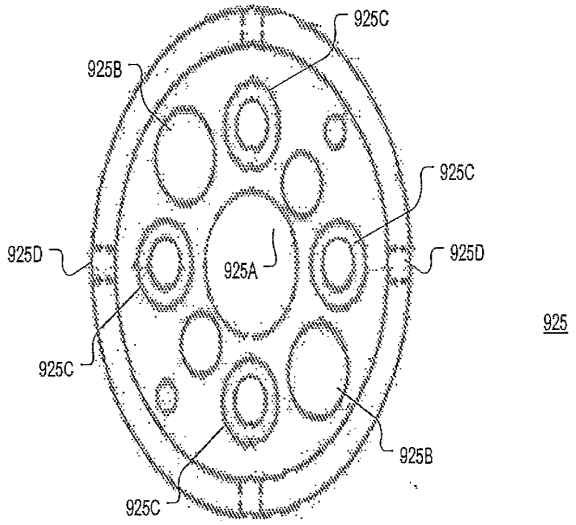

FIGURE 10F

Copy provided by USPTO from the IFW Image Database on 05/04/2012

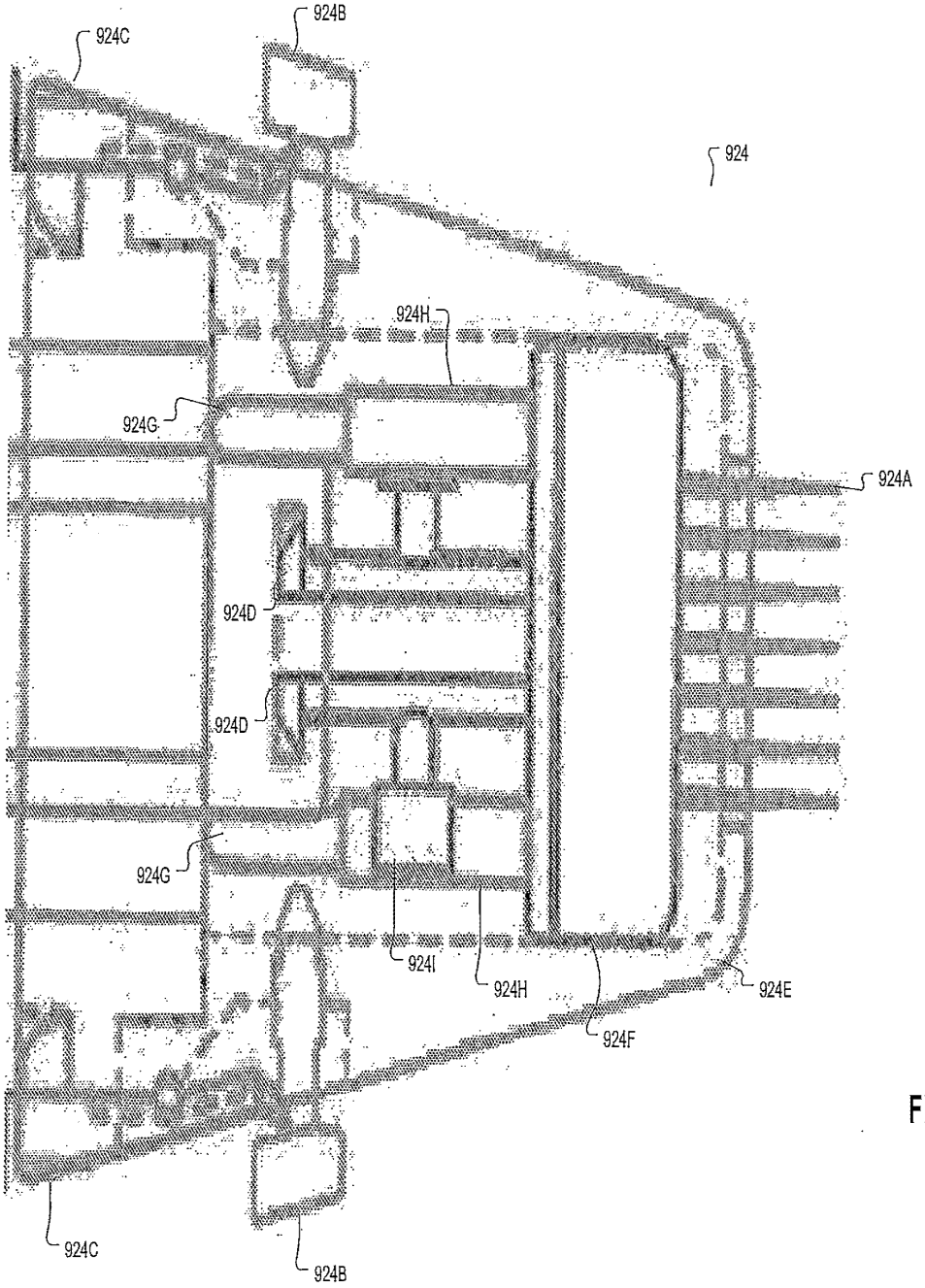

FIGURE 11A

Copy provided by USPTO from the IFW Image Database on 05/04/2012

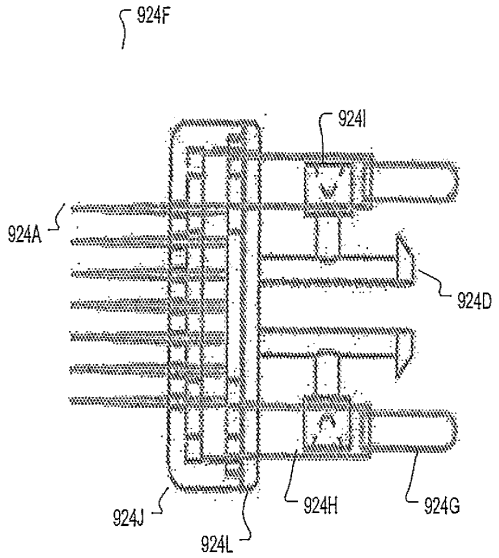

FIGURE 11B

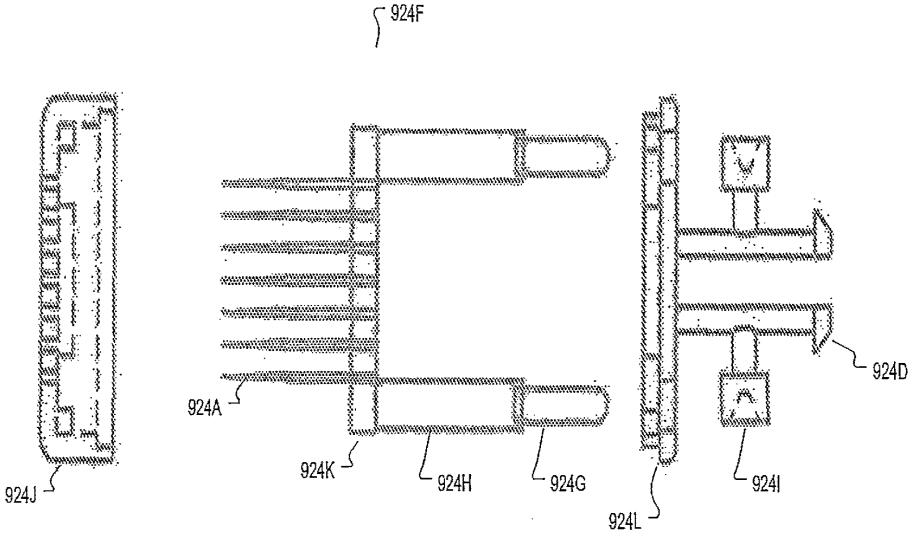

FIGURE 11C

Copy provided by USPTO from the IFW Image Database on 05/04/2012

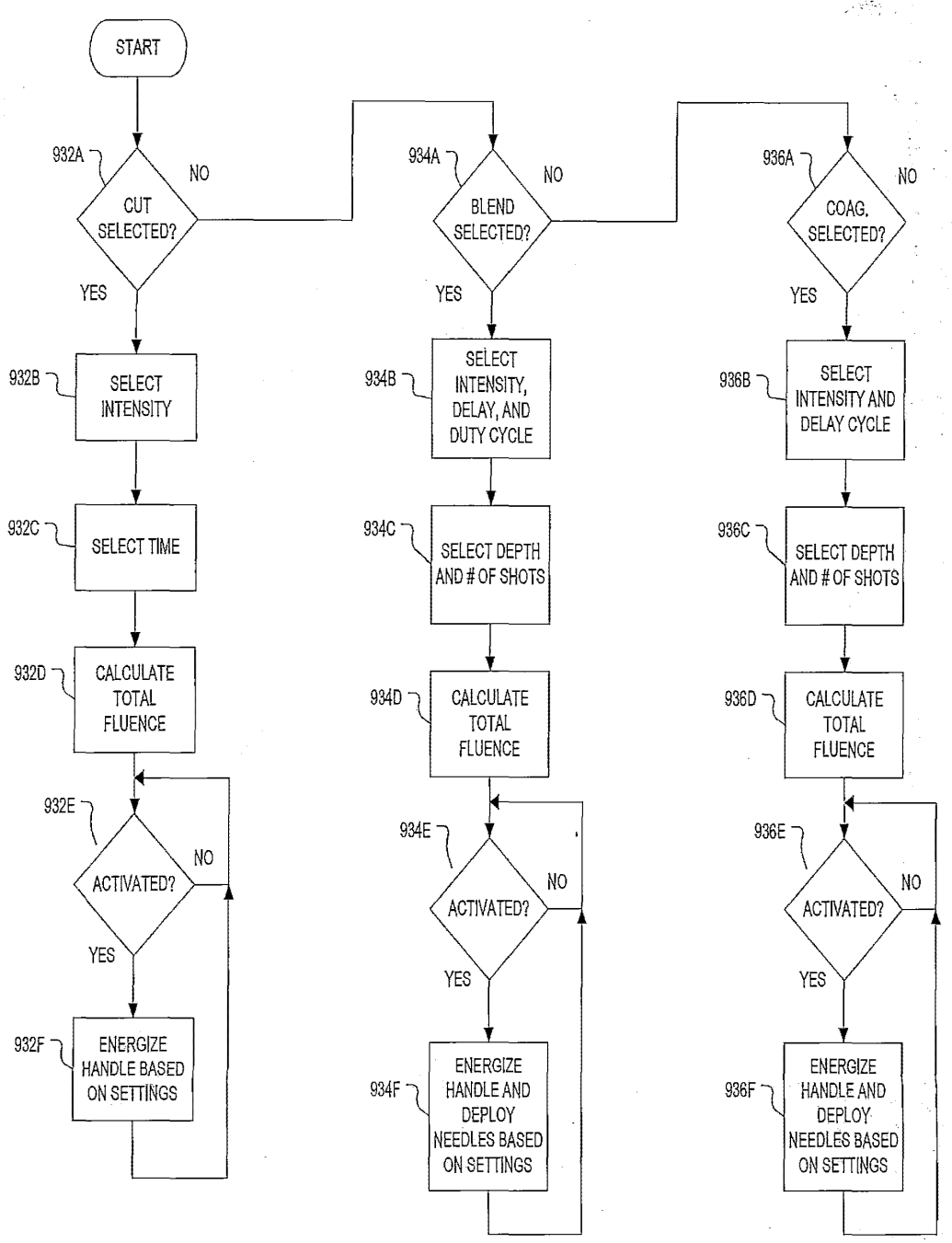

FIGURE 12

Copy provided by USPTO from the IFW Image Database on 05/04/2012

WIPO
WORLD
INTELLECTUAL PROPERTY
ORGANIZATION

DOCUMENT MADE AVAILABLE UNDER THE PATENT COOPERATION TREATY (PCT)

International application number:		**PCT/KR2012/001335**
International filing date:		**22 February 2012 (22.02.2012)**
Document type:		**Certified copy of priority document**
Document details:	Country/Office:	**US**
	Number:	**61/449,080**
	Filing date:	**03 March 2011 (03.03.2011)**
Date of receipt at the International Bureau:		**20 June 2012 (20.06.2012)**

Remark: Priority document submitted or transmitted to the International Bureau in compliance with Rule 17.1(a),(b) or (b-*bis*)

34, chemin des Colombettes
1211 Geneva 20, Switzerland
www.wipo.int

PCT 출원서

출력(전자적 형태가 원본)

0	**수리관청 전용**	
0-1	국제출원번호	**PCT/KR2012/001335**
0-2	국제출원일자	**2012년 02월 22일 (22.02.2012)**
0-3	수리관청 명칭 및 "PCT 국제출원"	**RO/KR**

0-4	서식 **PCT/RO/101 - PCT 출원서**	
0-4-1	우측에 기재된 바와 같이 작성되었다.	**PCT-SAFE** **버전 3.51.051.227 MT/FOP 20111001/0.20.5.19**
0-5	**신청** 아래 서명인은 본 국제 출원서가 특허협력조약에 의해 처리될 것을 청구합니다.	
0-6	**출원인이 지정한 수리관청**	대한민국 특허청 **(RO/KR)**
0-7	**출원인 또는 대리인의 서류참조기호**	**IP117107-PCT**
I	**발명의 명칭**	피부 미용방법, 미용기 및 미용시스템
II	**출원인**	
II-1	이 사람은	출원인 겸 발명자
II-2	우측 지정국에 관한 출원인	모든 지정국
II-4ko	성명	라종주
II-4en	Name (LAST, First):	**NA, Jongju**
II-5ko	주소	대한민국 **138-050** 서울특별시 송파구 방이동 **225**번지 한양**3**차아파트 **1-901**
II-5en	Address:	**Hanyang 3-cha APT. #1-901, 225 Bangi-dong, Songpa-gu** **Seoul 138-050** **Republic of Korea**
II-6	국적	대한민국 **KR**
II-7	거주국	대한민국 **KR**
II-11	출원인 코드	**4-2007-017445-9**

PCT 출원서

출력(전자적 형태가 원본)

IV-1	**대리인 또는 대표자** 아래에 기재된 자는 관할 국제기관에 대하여 우측에 표시된 자격으로 출원인을 대리하는 것으로 선임되었다.	대리인 (agent)
IV-1-1ko	성명	특허법인 맥
IV-1-1en	Name:	**MAC PATENT & LAW FIRM**
IV-1-2ko	주소	대한민국 **137-130** 서울특별시 서초구 양재동 **15-3** 화승빌딩**5**층
IV-1-2en	Address:	**5th Floor, Hwaseung Bldg., 15-3 Yangjae-dong, Seocho-gu** **Seoul 137-130** **Republic of Korea**
IV-1-3	전화번호	**82-2-566-0002**
IV-1-4	팩스번호	**82-2-558-5558**
IV-1-5	이메일 주소	**major@macpat.net**
IV-1-5(a)	이메일 사용동의 수리관청, 국제조사기관, 국제사무국, 국제예비심사기관이 필요 시 이 이메일 주소를 사용하여 이 국제 출원과 관련하여 발행된 통지서를 송부할 것에 동의한다.	서면 통지서에 앞서 선람용 사본 송부
IV-1-6	대리인 코드	**9-2003-100064-5**
V	지정국	
V-1	**본 출원서의 제출로, 규칙 4.9(a)에 따라, 부여될 수 있는 모든 종류의 권리 보호를 위하여, 그리고 해당하는 경우 지역특허 및 국내특허 모두를 위하여 당해 국제출원일에 PCT에 기속되는 모든 체약국이 지정된다.**	
V-2	**V-2란은 출원서 제출시 또는 규칙 26의2.1에 의해 그 이후 출원서 제6기재란에 위 특정 관련 체약국의 국내 선출원에 대한 우선권주장이 포함되어 있을 경우 당해 체약국의 국내법에 의해 해당 국내 선출원의 효력이 상실되는 것을 방지하기 위한 목적으로 당해 체약국의 지정을 제외하는 데에만 사용될 수 있다 (지정 제외시 이의 취소 불가능).**	**KR**
VI-1	선국내출원에 대한 우선권 주장	
VI-1-1	출원일	**2011년 02월 22일 (22.02.2011)**
VI-1-2	출원번호	**13/060,274**
VI-1-3	국가	**US**
VI-2	선국내출원에 대한 우선권 주장	
VI-2-1	출원일	**2011년 03월 03일 (03.03.2011)**
VI-2-2	출원번호	**61/449,080**
VI-2-3	국가	**US**

PCT 출원서

출력(전자적 형태가 원본)

VI-3	**인용에 의한 보완** 조약 제11조(1)(iii)(d) 또는 (e)에서 규정하는 국제출원의 요소, 또는 규칙 20.5(a)에서 규정하는 명세서, 청구 범위 또는 도면의 일부가 본 국제출원에는 포함되어 있지 않지만 조약 제11조(1)(iii) 규정의 요소 중 하나 이상이 수리관청에 최초로 접수된 날에 우선권주장의 기초가 된 선출원에 완전히 포함되어 있는 경우, 그 요소 또는 부분은 규칙 20.6 규정에 의한 확인을 조건으로, 규칙 20.6의 규정과 관련하여 본 국제출원에 있어서 인용에 의해 보완된다.		
VII-1	**국제조사기관(ISA) 선택**	**대한민국 특허청 (ISA/KR)**	
VIII	**선언서**	선언서 개수	
VIII-1	발명자의 동일성에 관한 선언	-	
VIII-2	국제출원일에 특허출원 및 특허를 받을 수 있는 출원인의 자격에 관한 선언	-	
VIII-3	국제출원일에 선출원의 우선권을 주장할 수 있는 출원인의 자격에 관한 선언	-	
VIII-4	발명자 선언(미국에 대한 지정의 경우에 한함)	-	
VIII-5	신규성을 해치지 아니하는 개시 또는 신규성 상실의 예외에 관한 선언	-	
IX	**체크 리스트**	용지 수	전자적 파일 첨부
IX-1	출원서(선언서 포함)	**4**	✓
IX-2	명세서	**18**	✓
IX-3	청구범위	**2**	✓
IX-4	요약서	**1**	✓
IX-5	도면	**27**	✓
IX-7	용지매수 소계	**52**	
	첨부 항목	서면 첨부	전자적 파일 첨부
IX-8	수수료 계산 용지	-	✓
IX-9	개별위임장 원본	-	✓
IX-18	PCT-SAFE 전자출원 매체	-	-
IX-20	**요약서에 수반되어야 할 도면 번호**	**1a**	
IX-21	**국제출원의 출원 언어**	한국어	
X-1	**출원인, 대리인 또는 대표자의 서명 또는 날인**	**(PKCS7 전자서명)**	
X-1-1	성명	특허법인 맥	
X-1-2	서명인의 성명	특허법인 맥	
X-1-3	권한 (출원서를 통해 서명자의 자격이 명백하지 않은 경우에는 그 자격도 표시)	특허법인 맥	

PCT 출원서

출력(전자적 형태가 원본)

수리관청 전용

10-1	국제출원으로 제출된 서류의 실제 접수일	**2012년 02월 22일 (22.02.2012)**
10-2 10-2-1 10-2-2	도면 접수 미접수	
10-3	국제출원으로 제출된 서류를 완성하는 서류 또는 도면의 추후 기간내 제출에 따른 정정된 실제 접수일	
10-4	**PCT 제11조(2)**에 따라 제출이 요구된 보완서로서 기간내 제출된 보완서의 접수일	
10-5	국제조사기관**(ISA)**	**ISA/KR**
10-6	조사료 납부시까지 지연된 조사용 사본의 송부	

국제 사무국 전용

11-1	국제 사무국의 기록원본 접수일	

PA 7355499

THE UNITED STATES OF AMERICA

TO ALL TO WHOM THESE PRESENTS SHALL COME:

UNITED STATES DEPARTMENT OF COMMERCE
United States Patent and Trademark Office

May 11, 2012

THIS IS TO CERTIFY THAT ANNEXED HERETO IS A TRUE COPY FROM THE RECORDS OF THE UNITED STATES PATENT AND TRADEMARK OFFICE OF THOSE PAPERS OF THE BELOW IDENTIFIED PATENT APPLICATION THAT MET THE REQUIREMENTS TO BE GRANTED A FILING DATE UNDER 35 USC 111.

APPLICATION NUMBER: *13/060,274*
FILING DATE: *March 30, 2011*

THE COUNTRY CODE AND NUMBER OF YOUR PRIORITY APPLICATION, TO BE USED FOR FILING ABROAD UNDER THE PARIS CONVENTION, IS *US13/060,274*

By Authority of the
Under Secretary of Commerce for Intellectual Property
and Director of the United States Patent and Trademark Office

P. SWAIN
Certifying Officer

UNITED STATES PATENT AND TRADEMARK OFFICE
DEPARTMENT OF COMMERCE

Electronic Acknowledgement Receipt

EFS ID:	9498665
Application Number:	13060274
International Application Number:	PCT/US08/74131
Confirmation Number:	7277
Title of Invention:	METHOD, SYSTEM, AND APPARATUS FOR DERMALOGICAL TREATMENT
First Named Inventor/Applicant Name:	Jungju Na
Customer Number:	26338
Filer:	Merle W. Richman
Filer Authorized By:	
Attorney Docket Number:	NA001US
Receipt Date:	22-FEB-2011
Filing Date:	
Time Stamp:	23:15:38
Application Type:	U.S. National Stage under 35 USC 371

Payment information:

Submitted with Payment	yes
Payment Type	Credit Card
Payment was successfully received in RAM	$325
RAM confirmation Number	12381
Deposit Account	501119
Authorized User	RICHMAN,MERLE W

The Director of the USPTO is hereby authorized to charge indicated fees and credit any overpayment as follows:

Charge any Additional Fees required under 37 C.F.R. 1.492 (National application filing, search, and examination fees)

Charge any Additional Fees required under 37 C.F.R. Section 1.17 (Patent application and reexamination processing fees)

Copy provided by USPTO from the IFW Image Database on 05/04/2012

Charge any Additional Fees required under 37 C.F.R. Section 1.21 (Miscellaneous fees and charges)

File Listing:

Document Number	Document Description	File Name	File Size(Bytes)/ Message Digest	Multi Part /.zip	Pages (if appl.)
1	Oath or Declaration filed	na001us-declaration.pdf	86559 0921c0f93a7eb408d531fe2cfd99859ae901e3d4	no	2
Warnings:					
Information:					
2	Preliminary Amendment	na001us-preliminary-amendment.pdf	71413 0c1e01407ff6752b289720ce9c5ffa0181c9792e	no	6
Warnings:					
Information:					
3	Transmittal of New Application	na001us-transmittal.pdf	163412 8a8bd7430d89c6976ef6615c9292f4b8c9a60b4c	no	3
Warnings:					
Information:					
4	Fee Worksheet (PTO-875)	fee-info.pdf	33072 c3d6914d204ae0c019c6fb0950adaeca47919736	no	2
Warnings:					
Information:					
		Total Files Size (in bytes):	354456		

This Acknowledgement Receipt evidences receipt on the noted date by the USPTO of the indicated documents, characterized by the applicant, and including page counts, where applicable. It serves as evidence of receipt similar to a Post Card, as described in MPEP 503.

New Applications Under 35 U.S.C. 111
If a new application is being filed and the application includes the necessary components for a filing date (see 37 CFR 1.53(b)-(d) and MPEP 506), a Filing Receipt (37 CFR 1.54) will be issued in due course and the date shown on this Acknowledgement Receipt will establish the filing date of the application.

National Stage of an International Application under 35 U.S.C. 371
If a timely submission to enter the national stage of an international application is compliant with the conditions of 35 U.S.C. 371 and other applicable requirements a Form PCT/DO/EO/903 indicating acceptance of the application as a national stage submission under 35 U.S.C. 371 will be issued in addition to the Filing Receipt, in due course.

New International Application Filed with the USPTO as a Receiving Office
If a new international application is being filed and the international application includes the necessary components for an international filing date (see PCT Article 11 and MPEP 1810), a Notification of the International Application Number and of the International Filing Date (Form PCT/RO/105) will be issued in due course, subject to prescriptions concerning national security, and the date shown on this Acknowledgement Receipt will establish the international filing date of the application.

Copy provided by USPTO from the IFW Image Database on 05/04/2012

PTO-1390 (Rev. 07-2005)
Approved for use through 3/31/2007. OMB 0651-0021
U.S. Patent and Trademark Office; U.S. DEPARTMNT OF COMMERCE
Under the Paperwork Reduction Act of 1995, no persons are required to respond to a collection of information unless it displays a valid OMB control number.

TRANSMITTAL LETTER TO THE UNITED STATES DESIGNATED/ELECTED OFFICE (DO/EO/US) CONCERNING A SUBMISSION UNDER 35 U.S.C. 371

ATTORNEY'S DOCKET NUMBER
NA001PCT

U.S. APPLICATION NO. (If known, see 37 CFR 1.5)

INTERNATIONAL APPLICATION NO.	INTERNATIONAL FILING DATE	PRIORITY DATE CLAIMED
PCT/US2008/074131	8/22/2008	

TITLE OF INVENTION METHOD, SYSTEM, AND APPARATUS FOR DERMALOGICAL TREATMENT

APPLICANT(S) FOR DO/EO/US Na, Jongju Na, Merle Richman

Applicant herewith submits to the United States Designated/Elected Office (DO/EO/US) the following items and other information:

1. [x] This is a **FIRST** submission of items concerning a submission under 35 U.S.C. 371.
2. [ ] This is a **SECOND** or **SUBSEQUENT** submission of items concerning a submission under 35 U.S.C. 371.
3. [x] This is an express request to begin national examination procedures (35 U.S.C. 371 (f)). The submission must include items (5), (6), (9) and (21) indicated below.
4. [ ] The US has been elected (Article 31).
5. [x] A copy of the International Application as filed (35 U.S.C. 371 (c)(2))
   a. [ ] is attached hereto (required only if not communicated by the International Bureau).
   b. [ ] has been communicated by the International Bureau.
   c. [x] is not required, as the application was filed in the United States Receiving Office (RO/US).
6. [x] An English language translation of the International Application as filed (35 U.S.C. 371 (c)(2)).
   a. [ ] is attached hereto.
   b. [x] has been previously submitted under 35 U.S.C. 154(d)(4).
7. [x] Amendments to the claims of the International Application under PCT Article 19 (35 U.S.C. 371(c)(3))
   a. [ ] are attached hereto (required only if not communicated by the International Bureau).
   b. [ ] have been communicated by the International Bureau.
   c. [ ] have not been made; however, the time limit for making such amendments has NOT expired.
   d. [x] have not been made and will not be made.
8. [ ] An English language translation of the amendments to the claims under PCT Article 19 (35 U.S.C. 371(c)(3)).
9. [x] An oath or declaration of the inventor(s) (35 U.S.C. 371(c)(4)).
10. [ ] An English language translation of the annexes of the International Preliminary Examination Report under PCT Article 36 (35 U.S.C. 371(c)(5)).

Items 11 to 20 below concern document(s) or information included:

11. [ ] An Information Disclosure Statement under 37 CFR 1.97 and 1.98.
12. [ ] An assignment document for recording. A separate cover sheet in compliance with 37 CFR 3.28 and 3.31 is included.
13. [x] A preliminary amendment.
14. [ ] An Application Data Sheet under 37 CFR 1.76.
15. [ ] A substitute specification.
16. [ ] A power of attorney and/or change of address letter.
17. [ ] A computer-readable form of the sequence listing in accordance with PCT Rule 13*ter*.2 and 37 CFR 1.821 – 1.825.
18. [ ] A second copy of the published International Application under 35 U.S.C. 154(d)(4).
19. [ ] A second copy of the English language translation of the international application under 35 U.S.C. 154(d)(4).

This collection of information is required by 37 CFR 1.414 and 1.491–1.492. The information is required to obtain or retain a benefit by the public, which is to file (and by the USPTO to process) an application. Confidentiality is governed by 35 U.S.C. 122 and 37 CFR 1.11 and 1.14. This collection is estimated to take 15 minutes to complete, including gathering information, preparing, and submitting the completed form to the USPTO. Time will vary depending upon the individual case. Any comments on the amount of time you require to complete this form and/or suggestions for reducing this burden, should be sent to the Chief Information Officer, U.S. Patent and Trademark Office, U.S. Department of Commerce, P.O. Box 1450, Alexandria, VA 22313-1450. DO NOT SEND FEES OR COMPLETED FORMS TO THIS ADDRESS. **SEND TO: Mail Stop PCT, Commissioner for Patents, P.O. Box 1450, Alexandria, VA 22313-1450.**

Copy provided by USPTO from the IFW Image Database on 05/04/2012

Under the Paperwork Reduction Act of 1995, no persons are required to respond to a collection of information unless it displays a valid OMB control number.

U.S. APPLICATION NO. (if known, see 37 CFR 1.5)	INTERNATIONAL APPLICATION NO. PCT/US2008/074131	ATTORNEY'S DOCKET NUMBER NA001PCT

20. Other items or information:

The following fees have been submitted	CALCULATIONS	PTO USE ONLY
21. [X] Basic national fee (37 CRF 1.492(a)) $330	$ 330	
22. [X] Examination fee (37 CFR 1.492(c)) If the written opinion prepared by ISA/US or the international preliminary examination report prepared by IPEA/US indicates all claims satisfy provisions of the PCT PCT Article 33(1)-(4) $0		
All other situations $220	$ 220	
23. [X] Search fee (37 CFR 1.492(b)) If the written opinion of the ISA/US or the international preliminary examination report prepared by IPEA/US indicates all claims satisfy provisions of the PCT Article 33(1)-(4). $0		
Search fee (37 CFR 1.445(a)(2)) has been paid on the international application to the USPTO as an International Searching Authority $100		
International Search Report prepared by an ISA other than the US and provided to the Office or previously communicated to the US by the IB. $400		
All other situations $500	$ 100	
TOTAL OF 21, 22 and 23 =	$ 650	
[ ] Additional fee for specification and drawings filed in paper over 100 sheets (excluding sequence listing IN COMPLIANCE WITH 37 cfr 1.821(c) or (e) or computer program listing in an electronic medium) (37 CFR 1.492(j)). The fee is **$250** for each additional 50 sheets of paper or fraction thereof.		

Total Sheets	Extra sheets	Number of each additional 50 or fraction thereof (round up to a whole number)	RATE	
29 -100 =	0 /50 =	0	x **$250**	$ 0

Surcharge of **$130.00** for furnishing any of the search fee, examination fee, or the oath or declaration after the date of the commencement of the national stage (37 CFR 1.492(h)).	$ 0

CLAIMS	NUMBER FILED	NUMBER EXTRA	RATE	$	
Total claims	20 - 20 =	0	X **$52**	$ 0	
Independent claims	3 - 3 =	0	X **$220**	$ 0	
MULTIPLE DEPENDENT CLAIM(S) (if applicable)			+ **$390**	$ 0	
			TOTAL OF ABOVE CALCULATIONS =	$ 650	
[X] Applicant claims small entity status. See 37 CFR 1.27. Fees above are reduced by ½.				$ 325	
			SUBTOTAL =	$ 325	
Processing fee of **$130.00** for furnishing the English translation later than 30 months from the earliest claimed priority date (37 CFR 1.492(i)). +				$ 0	
			TOTAL NATIONAL FEE =	$ 325	
Fee for recording the enclosed assignment (37 CFR 1.21(h)). The assignment must be accompanied by an appropriate cover sheet (37 CFR 3.28, 3.31). **$40.00** per property +				$ 0	
			TOTAL FEES ENCLOSED =	$ 325	
				Amount to be refunded:	$
				Amount to be charged:	$325

Copy provided by USPTO from the IFW Image Database on 05/04/2012

Under the Paperwork Reduction Act of 1995, no persons are required to respond to a collection of information unless it displays a valid OMB control number.

a. [x] Electronic payment via www.uspto.gov.

b. [ ] Please charge my Deposit Account No. 50-1119 in the amount of $_____ to cover the above fees. A duplicate copy of this sheet is enclosed.

c. [X] The Commissioner is hereby authorized to charge any additional fees which may be required, or credit any overpayment to Deposit Account No. 50-1119. A duplicate copy of this sheet is enclosed.

d. [ ] Fees are to be charged to a credit card. **WARNING:** Information on this form may become public. **Credit card information should not be included on this form.** Provide credit card information and authorization on PTO-2038.

NOTE: Where an appropriate time limit under 37 CFR 1.495 has not been met, a petition to revive (37 CFR 1.137(a) or (b)) must be filed and granted to restore the International Application to pending status.

SEND ALL CORRESPONDENCE TO:

Merle W. Richman, Cust ID - 26338
Merle Richman
Customer ID - 26338
PO Box 3333
La Jolla, CA 92038-3333

USA

/mwresq/ February 22, 2011
SIGNATURE:

Merle Richman
NAME

38282
REGISTRATION NUMBER

Copy provided by USPTO from the IFW Image Database on 05/04/2012

METHOD, SYSTEM, AND APPARATUS FOR DERMALOGICAL TREATMENT

Cross Reference to Related Applications

[0001] The present application claims the benefit of priority to Republic of Korea Application Number 10-2008-0076993, entitled " Electrical system, skin, skin care and cosmetic electricity," filed on August 8, 2008, the entirety of which is incorporated by reference.

Technical Field

[0002] Various embodiments described herein relate generally to treating dermalogical tissue, including systems, and methods used in treating dermalogical tissue.

Background Information

[0003] It may be desirable to treat dermalogical tissue, the present invention provides such treatment.

Brief Description of the Drawings

[0004] FIG. 1A is a simplified isometric diagram of a dermalogical treatment apparatus according to various embodiments.

[0005] FIG. 1B is a simplified, side diagram of the dermalogical treatment apparatus according to various embodiments.

[0006] FIG. 1C is a simplified, exploded view of layers of the dermalogical treatment apparatus according to various embodiments.

[0007] FIG. 1D is a simplified view of a layer of a dermalogical treatment apparatus according to various embodiments.

[0008] FIG. 2A is a simplified isometric diagram of a dermalogical treatment architecture according to various embodiments.

[0009] FIG. 2B is a simplified cross-sectional diagram of a dermalogical treatment apparatus according to various embodiments.

[0010] FIG. 2C is a simplified cross-sectional diagram of another dermalogical treatment apparatus according to various embodiments.

Copy provided by USPTO from the IFW Image Database on 05/04/2012

[0011] FIG. 2D is a simplified cross-sectional diagram of another dermalogical treatment apparatus according to various embodiments.

[0012] FIG. 2E is a simplified view of a layer of a dermalogical treatment apparatus according to various embodiments.

[0013] FIG. 2F is a simplified, exploded view of layers of the dermalogical treatment apparatus according to various embodiments.

[0014] FIG. 3A is a simplified isometric diagram of a dermalogical treatment apparatus according to various embodiments.

[0015] FIG. 3B is a simplified isometric diagram of another dermalogical treatment apparatus according to various embodiments.

[0016] FIG. 4A is a simplified view of a layer of a dermalogical treatment apparatus according to various embodiments.

[0017] FIG. 4B is a simplified view of a layer and apparatus of a dermalogical treatment system according to various embodiments.

[0018] FIG. 4C is a simplified view of a layer and apparatus of a dermalogical treatment system according to various embodiments.

[0019] FIG. 5A-6 are diagrams of signals that may be applied to one or more dermalogical treatment systems according to various embodiments.

[0020] FIG. 7A-7C are flow diagrams illustrating dermalogical treatment system processing algorithms according to various embodiments.

[0021] FIG. 8 is a block diagram of an article according to various embodiments.

Copy provided by USPTO from the IFW Image Database on 05/04/2012

Detailed Description

[0022] FIG. 1A is a simplified isometric diagram and FIG. 1B is a simplified side view of a dermalogical treatment apparatus 10 according to various embodiments. The apparatus 10 may include a user handle 220 coupled to an acupuncture plate 200. In an embodiment the plate 200 may be elastically coupled to the handle segment 222 via an elastomeric section 210. The elastomeric section may be comprised of a combination of elastomeric materials and non-elastomeric materials. The elastomeric materials may include plastics, rubber (synthetic or natural), and spring(s).

[0023] FIG. 1C includes a simplified exploded view of an embodiment of an acupuncture plate 200 according to various embodiments. The plate 200 may include an upper, substantially rigid section or layer 290, deformable or elastic section 270 or layer, and acupuncture section or layer 250. The acupuncture section 250 may include a plurality of acupuncture pins or needles 230. FIG. 1D is a simplified bottom view of the plate 200 showing the location or holes 212 for the pins or needles 230. In an embodiment the plate 200 may have a rectangular cross section having a dimensional about 1 to 4 cm in width and about 1 to 6 cm in length. The plate 200 may any shape including circular, elliptical, polygon, or other shape where the shape may be particular to a dermalogical area to be treated.

[0024] In an embodiment the plate may include about 140 pins or needles 230 uniformly separated. Each needle may be about 0.1 to 0.4 mm in diameter and 0.2 mm to 1.4 mm in length including 0.3 mm in diameter and 0.8 mm in length in an embodiment. The elastic section or layer 270 may be comprised of a combination of elastomeric materials and non-elastomeric materials. The elastomeric materials may include plastics, rubber (synthetic or natural), and spring(s). The pin section 230 may be coupled directly or indirectly to the upper section 290 via the elastic section 250, including via glues, screws, welds, or other connection. In an embodiment the pin section 250 may include elastomers to enable at least partial deformation of the pin section 250 about the pins 230.

[0025] In operation a user may employ the apparatus 10 to create a plurality of micro-wounds or holes in dermalogical layers of a mammal's 20 skin or dermis. The micro-wound or hole creation may improve the absorption or application of one or more chemicals applied on or about the micro-wounds or holes.

[0026] FIG. 2A is a simplified diagram of a dermalogical treatment architecture 310 according to various embodiments. Architecture 310 includes an acupuncture apparatus 320 and an electrical signal generation system 300. The the electrical signal generation system 300 may be electrically coupled to the acupuncture apparatus 320 via one or more wires 300A and to a mammal 20 to be treated via one or more wires 300B. FIG. 2B is a simplified cross-sectional

Copy provided by USPTO from the IFW Image Database on 05/04/2012

diagram of the acupuncture apparatus 320 according to various embodiments. The apparatus 320 may include a handle 330, elastic section 333, electrical interface 340, internal wire(s) 331and plate 350. The pins 351 may have a length A (0.3 mm to 2.1 mm in an embodiment) where at least one pin 351 is electrically coupled to the electrical interface 340 via the internal wire 331. The electrical interface 340 may be removably connected to the system 300 wire 300A.

[0027] The electrical signal generation system 300 may generate a vary of signals (such as shown in FIGS. 5A to 6) to vibrate one or more pins 351 electrically coupled to the system 300 via the internal wire 331 and lead 300A. A pin vibration 351 may increase the micro-wound or cut formed in dermis by the pin 351. FIG. 2C is a simplified cross-sectional diagram of an acupuncture apparatus 360 according to various embodiments. The apparatus 360 may include a handle 330, an elastic section 333, an electrical conductive interface 390, internal wire(s) 331, signal generator 370, switch 375, and plate 350. The signal generator 370 may be coupled to at least one pin 351 via internal wire 331 and coupled to the conductive interface 390.

[0028] The signal generator or module 370 may generate a vary of signals (such as shown in FIGS. 5A to 6) to vibrate one or more pins 351 electrically coupled to the system 300 via the internal wire 331 and the conductive interface 390. In operation a user 20 may touch the conductive interface 390 and place one or more electrically coupled pins 351 in contact with their dermis to form an electrical pathway from the pin 351 to the electrical conductive interface 390. The signal generator 370 may include a battery to supply energy to generate one or more electrical signals. The switch 375 coupled to the generator 370 may cause the generator to produce one or more electrical signals for a predetermined time interval or until the switch 375 is triggered again. As noted a pin vibration 351 may increase the micro-wound or cut formed in dermis by the pin 351.

[0029] FIG. 2D is a simplified cross-sectional diagram of an acupuncture apparatus 362 according to various embodiments. The apparatus 362 may include a handle 330, an elastic section 333, internal wire(s) 331, 332, signal generator 370, switch 375, and plate 350. The signal generator 370 may be coupled to at least one pin 351 via internal wire 331 and coupled to at least one other pin 352 via internal wire 332. When active the pins 351, 352 may form at least one dipole pair. The signal generator or module 370 may generate a vary of signals (such as shown in FIGS. 5A to 6) to vibrate one or more dipole pair or bipolar pins 351, 352.

[0030] FIG. 2F includes a simplified exploded view of an embodiment of an acupuncture plate 350 including at least one electrically coupled pin 351 according to various embodiments. The plate 350 may include an upper, substantially rigid section or layer 357, deformable or elastic section 355 or layer, and acupuncture section or layer 353. The acupuncture section 353 may include a plurality of acupuncture pins or needles 351 where at least one pin 351 is

Copy provided by USPTO from the IFW Image Database on 05/04/2012

electrically coupled to the wire 331. In a bipolar configuration a second wire 332 may be coupled to at least one other pin 351. FIG. 2E is a simplified bottom view of the plate 350 showing the pins or needles 359, 357 where the pins may be electrically coupled to a first wire 331 and a second wire 332 to form dipole pair (bipolar pins).

[0031] In an embodiment the plate 350 may have a rectangular cross section having a dimensional about 1 to 4 cm in width and about 1 to 6 cm in length. The plate 350 may any shape including circular, elliptical, polygon, or other shape where the shape may be particular to a dermalogical area to be treated.

[0032] In an embodiment the plate may include about 140 pins or needles 351 uniformly separated. Each needle may be about 0.1 to 0.4 mm in diameter and 0.2 mm to 1.4 mm in length including 0.3 mm in diameter and 0.8 mm in length in an embodiment. The elastic section or layer 355 may be comprised of a combination of elastomeric materials and non-elastomeric materials. The elastomeric materials may include plastics, rubber (synthetic or natural), and spring(s). The pin section 353 may be coupled directly or indirectly to the upper section 357 via the elastic section 353, including via glues, screws, welds, or other connection. In an embodiment the pin section 353 may include elastomers to enable at least partial deformation of the pin section 353 about the pins 351.

[0033] FIGS. 3A and 3B are simplified isometric diagrams of acupuncture apparatus 400, 460 including at least one pin 451 that may be coupled to an electrical signal via an internal wire 458. Each apparatus 400, 460 includes curved roller 450 having a plurality of acupuncture pins 451 where the pins 451 may be similar to pins 351. In apparatus 400, the electrical lead wire 400A may be coupled to an electrical interface 410 in the apparatus handle 430 where the interface 410 is electrically coupled to the internal wire 458. In apparatus 460, the handle 430 may include a signal generator 470 similar to generator 370, switch 475, and conduction surface 490. Apparatus 460 may operate similar to apparatus 360 in operation other than the rolling capability of the apparatus 460, 400. In an embodiment the rollers 450 may have various configurations to conform to a dermal area to be treated.

[0034] In any of the above apparatus 10, 320, 350, 360, 400, 460, the plate or roller 200, 350, 450 may include a plurality of embedded LEDs 32A, 32B, a battery 52, a controller 54, and an antenna 56 as shown in FIG. 4A. In an embodiment the LED 32A may be configured to emit energy of a first particular frequency range and the LED 32B may be configured to emit energy of a second particular frequency range. The surface 22 of a roller 450, plate 200, 350, 450 may also be embedded with a chemical 22A that may be used to treat dermalogical cells. The chemical 22A may be reactive to the first and the second frequency ranges. Further dermalogical cells may be reactive to the first and the second frequency ranges. In addition, the combination

Copy provided by USPTO from the IFW Image Database on 05/04/2012

of the chemical 22A and the application of the first and the second frequency ranges to the chemical 22A and dermalogical cells may have a synergetic effect.

[0035] In an embodiment the chemical 22A may be applied directly to the dermalogical cells to be treated. In a further embodiment a chemical 22A may not be employed in addition to the apparatus 10, 320, 350, 360, 400, 460. In an embodiment the pin section 250, 353, may be translucent and comprised of a polyurethane, medical silicon, or other pliable, translucent, hypoallergenic material.

[0036] In an embodiment the local controller 54 and battery 52 may also be embedded in the upper section 290, 357, pin section 230, 351, or the handle 220, 330, or separately between these sections. The controller 54 may be electrically coupled to the one or more LEDS 32A, 32B. The controller 54 may also be coupled to a battery 52. The controller 54 may generate one or more signals for LEDs 32A, 32B as a function of a user switch 75, 56. The signals may vary as a function of the first and second frequency ranges. The controller 54 may include one or more timers 58 that may limit the application of energy to the LEDs 32A, 32B to predetermined time intervals. In an embodiment the controller may also be coupled to an antenna 56 to receive or transmit one or more signals related to the transmission of energy to one or more LEDs 32A, 32B. In an embodiment the system 10 may be configured to treat a particular segment of dermalogical cells such as a face. The apparatus 10 may be configured to conform to a user's anatomy so that emitted light is focused on dermalogical cells. In another embodiment 200, the system 200 may be configured to treat another anatomical region including dermalogical cells on an arm, leg, chest, hands, feet, neck, or other region.

[0037] In an embodiment 510 shown in FIG. 4B, a controller 54, an antenna 104, and a power source 60 may be located in external to the apparatus 10, 320, 360. The power source 60 may be coupled to the controller 54. The controller 54 may be coupled to one or more LEDs 32A, 32B via one or more electric wires 106. The controller 54 may generate one or more signals for LEDs 32A, 32B as a function of the user switch 56. The signals may vary as a function of the first and second frequency ranges. The controller 54 may include one or more timers 58 that may limit the application of energy to the LEDs 32A, 32B to predetermined time intervals. In an embodiment the controller may also be coupled to an antenna 104 to receive or transmit one or more signals related to the transmission of energy to one or more LEDs 32A, 32B.

[0038] In any of the above apparatus 10, 320, 350, 360, 400, 460, the plate or roller 200, 350, 450 may include a plurality of embedded LED lens 536, a fiber optic pathway 534, and an LED 532. In this embodiment the LED 532 may be coupled to lens 536 via the fiber optic

Copy provided by USPTO from the IFW Image Database on 05/04/2012

pathway 534. The controller 540 may generate an LED signal via the LED 532 that is transmitted to dermalogical cells via the lens 536 and the fiber optic pathway 534.

[0039] FIGS.5A-5B are diagrams of electrical signal waveforms 650, 630, 640 that may be applied to one or more LEDs 32A, 32B, 532 and to the pins 230, 351, 451 according to various embodiments. The signal waveform 650 includes several square-wave pulses 652, 654, 656 that may be applied to an LED 32A, 32B, 532. Each pulse 652, 654, 656 may a have a similar magnitude and envelope. The waveform 650 may be used to energize an LED 32A, 32B, 532 and to the pins 230, 351, 451 periodically P1 for a predetermined interval T1 where each pulse 652, 654, 656 has a amplitude A1. In an embodiment, A1 may be about 0.1 milliamperes (mA) to 10 mA, the pulse width T1 may be about 100 microsecond (μs) to 500 μs and the period P1 may from 100 ms to 500 ms as a function of the energy required to create capacitance in a liquid. In another embodiment, A1 may be about 0.5 milliamperes (mA) to 5 mA, the pulse width T1 may be about 200 microsecond (μs) and the period P1 may about 250 ms as a function of the energy to drive an LED or cause one or more pins 230, 351, 451 to vibrate.

[0040] In FIG. 5B a signal waveform 630 may be applied to a first LED 32A, 32B, 532 module or group and to the pins 230, 351, 451 and a second waveform 640 may be applied or used to energize a second LED 32A, 32B, 532 module and the pins 230, 351, 451, 352. The signal waveform 630 includes several square-wave pulses 632, 634, and 636 and the signal waveform 640 includes several square-wave pulses 642, 644, and 646. Each pulse 632, 634, 636, 642, 644, 646 may a have a similar magnitude and envelope. The waveform 630 may be used to energize a first LED 32A, 32B, 332 module and the pins 230, 351, 451 periodically P1 for a predetermined interval T1 where each pulse 632, 634, 636 has an amplitude A1. The waveform 640 may be used to energize a second LED 32A, 32B, 332 module and the pins 230, 351, 451 periodically P2 for a predetermined interval T2 where each pulse 642, 644, 646 has an amplitude B1. The pulse width T1, T2 may be about 100 microsecond (μs) to 500 μs and the period P1, P2 may from 100 ms to 500 ms as a function of the energy to affect dermalogical cells or chemicals 22A. In another embodiment, A1, A2 may be about 0.5 milliamperes (mA) to 5 mA, the pulse width T1, T2 may be about 200 microsecond (μs) and the period P1, P2 may about 250 ms as a function of the energy required to affect dermalogical cells or chemicals 22A. In an embodiment the pulses 632, 634, 636 do not substantially overlap the pulses 642, 644, 646. In an embodiment T1 > T2 and P2 is an integer multiple of P1.

[0041] FIG. 6 depicts a waveform 670 that includes multiple pulses 672, 674, 676, 678, 682, and 684 that may not overlap in the time or the frequency domain. In an embodiment each pulse 672, 674, 676, 678, 682, and 684 may have a pulse width T3, and frequency spectrum width F1 and period P3. The pulse 672 is frequency offset from the pulse 674, the pulse 676 is

Copy provided by USPTO from the IFW Image Database on 05/04/2012

frequency offset from the pulse 678, and the pulse 682 is frequency offset from the pulse 684. The pulses 672, 674, 676, 678, 682, and 684 may be applied to an LED module to affect dermalogical cells or chemicals 22A and the pins 230, 351, 451. Pulses 672, 674 having different frequency spectrums may enable different LED stimulation. In an embodiment the pulses 672, 676, 682 may be applied to a first LED module and the pulses 674, 678, 684 may be applied to a second LED module. The frequency separation between the respective pulses may enable simultaneous energization of a first and a second LED module and the pins 230, 351, 451 and subsequent and independent spectrum generation.

[0042] In an embodiment the invention may employ the algorithm 740 shown in FIG. 7A to apply therapy to dermalogical cells. A user, clinician, or equipment may place an apparatus 10, 320, 360, 360, 400, 460 on dermalogical cells to be treated (activity 741) including pressing the apparatus against the cells firmly enough to embed one or more pins 251, 351, 451 in the cells. A first signal such as shown in FIGS. 5A, 5B, and 6 may be applied to a first LED module or group (32A) and the pins 230, 351, 451 of a dermalogical apparatus 10, 320, 360, 360, 400, 460 (activity 742) for a predetermined time period (activity 744). A second signal such as shown in FIGS. 5A, 5B, and 6 may be applied to a second LED module or group (32B) and the pins 230, 351, 451 of a dermalogical apparatus 10, 320, 360, 360, 400, 460 (activity 746) for a predetermined time period (activity 748). The signals applied to the groups may be selected to stimulate dermalogical cells or chemicals 22A or cause vibration of one or more pins 251, 351, 451.

[0043] In another embodiment the invention may employ the algorithm 750 shown in FIG. 7B to apply therapy to dermalogical cells. A user, clinician, or equipment may apply a light sensitive chemical on an apparatus 10, 320, 360, 360, 400, 460 or on dermalogical cells to be treated (activity 751). The user, clinician, or equipment may place apparatus 10, 320, 360, 360, 400, 460 on dermalogical cells to be treated (activity 752). A signal such as shown in FIGS. 5A, 5B, and 6 may be applied to a LED module or group (32A or 32B) and the pins 230, 351, 451 (activity 354) for a predetermined time period (activity 356).

[0044] In another embodiment the invention may employ the algorithm 760 shown in FIG. 7C to apply therapy to dermalogical cells. A user, clinician, or equipment may apply a light sensitive chemical on an apparatus 10, 320, 360, 360, 400, 460 or on dermalogical cells to be treated (activity 761). The user, clinician, or equipment may place an apparatus 10, 320, 360, 360, 400, 460 on dermalogical cells to be treated (activity 762). A first signal such as shown in FIGS. 5A, 5B, and 6 may be applied to a first LED module or group (32A) and one or more pins 251, 351, 451 of a dermalogical apparatus 10, 320, 360, 360, 400, 460 (activity 763) for a predetermined time period (activity 764). A second signal such as shown in FIGS. 5A, 5B, and 6

Copy provided by USPTO from the IFW Image Database on 05/04/2012

may be applied to a second LED module or group (32B) and one or more pins 251, 351, 451 of a dermalogical apparatus 10, 320, 360, 360, 400, 460 (activity 766) for a predetermined time period (activity 768).

[0045] The apparatus 10, 320, 360, 360, 400, 460 may be used to employ cosmetic or medications or other chemicals directly on dermalogical cells such as skin with the addition of light of specific frequencies for treatment and healing of epidermal cells of the skin or tissue below the skin with the object of assisting the agents used in delivery, uptake, action and function more effectively. The LEDs 32A, 32B may create the specific frequencies of light. The apparatus 10, 320, 360, 360, 400, 460, light application may enable cosmetic or medication or other active chemicals 22A on dermalogical cells for longer time periods while preventing dehydration of the applied substances. Such light application may improve the efficacy of cosmetic or medication or other active chemical as a function of the selected wavelengths or frequencies.

[0046] Further the dermalogical system application may increase cellular activity and help heal tissue faster and facilitate the delivery, uptake and use in the cell of the cosmetics, medications, or chemicals 22A used. The LED light of specific frequencies may increase fibroblast production and collagen as well as other activities of the cell including stimulating the organells and mitochondria to produce ATP for cell energy for functioning, decreasing treatment time and facilitate healing. The apparatus 10, 320, 360, 360, 400, 460 make the agents used on the body more efficacious and useful to the body on a cellular level.

[0047] The apparatus 10, 320, 360, 360, 400, 460 may stimulate the basic energy processes in the mitochondria (energy compartments) of each cell, particularly when near-infrared light is used to activate the color sensitive chemicals (chromophores, cytochrome systems) inside but not limited to these spectrum alone as the UV, other visible and IR spectrums may also be usable. In an embodiment optimal LED wavelengths for skin repair may include 640, 680, 730 nanometers (nm) wavelengths to IR 880 nm. Further application of blue light 400 nm to 490 via the apparatus 10, 320, 360, 360, 400, 460 may inhibit the growth and kill bacteria, fungus in and on dermalogical cells. The apparatus 10, 320, 360, 360, 400, 460 may be employed to apply cosmetics, medications and/or other actives directly to the skin and maintain their presence long-term while using LED or other actinic light to increase their effect on the cells and tissue in the body. The apparatus 10, 320, 360, 360, 400, 460 are also highly portability and enable user mobility during treatment.

[0048] Chemicals 22A may include cosmetics, medications and other actives appropriate for dermalogical cells including AHA's (alpha hydroxy acid), natural oils, aloe vera compounds, collagen boosters, bt, chitosan, daeses, endorphins, photodynamic drugs (PDT) like (Photofrin

Copy provided by USPTO from the IFW Image Database on 05/04/2012

or ALA), vitamins A, C E or others, kojic acid, retinols or other exfoliant, salicylic acid, anti oxidants or other youth boosters and anti aging cosmetic or medications, antiseptic, antibiotics, anti-cancer agents, aroma therapy agents, fruit and vegetable extracts, anti-inflammatory agents, pain relievers, hormones, depilatories, and others, but the scope of this invention is not limited to these alone but can include any helpful medication, herbal formula or active compound for the skin and/or other tissues.

[0049] FIG. 8 is a block diagram of an article 780 according to various embodiments. The article 780 shown in FIG. 8 may be used in various embodiments as a part of apparatus 10, 320, 360, 360, 400, 460 where the article 780 may be any computing device including a personal data assistant, cellular telephone, laptop computer, or desktop computer. The article 780 may include a central processing unit (CPU) 782, a random access memory (RAM) 784, a read only memory (ROM") 806, a display 788, a user input device 812, a transceiver application specific integrated circuit (ASIC) 816, a digital to analog (D/A) and analog to digital (A/D) convertor 815, a microphone 808, a speaker 802, and an antenna 804. The CPU 782 may include an OS module 814 and an application module 813. The RAM 784 may include switches 56 and timers 58.

[0050] The ROM 806 is coupled to the CPU 782 and may store the program instructions to be executed by the CPU 782. The RAM 784 is coupled to the CPU 782 and may store temporary program data, overhead information, and the queues 798. The user input device 812 may comprise an input device such as a keypad, touch pad screen, track ball or other similar input device that allows the user to navigate through menus in order to operate the article 780. The display 788 may be an output device such as a CRT, LCD, LED or other lighting apparatus that enables the user to read, view, or hear user detectable signals.

[0051] The microphone 808 and speaker 802 may be incorporated into the device 780. The microphone 808 and speaker 802 may also be separated from the device 780. Received data may be transmitted to the CPU 782 via a bus 796 where the data may include signals for an LED 32A, 32B, 332 or optical module or wires 331, 458. The transceiver ASIC 816 may include an instruction set necessary to communicate data, screens, or signals. The ASIC 816 may be coupled to the antenna 804 to communicate wireless messages, pages, and signal information within the signal. When a message is received by the transceiver ASIC 816, its corresponding data may be transferred to the CPU 782 via the serial bus 796. The data can include wireless protocol, overhead information, and data to be processed by the device 780 in accordance with the methods described herein.

[0052] The D/A and A/D convertor 815 may be coupled to one or more optical modules to generate a signal to be used to energize one of the optical modules. The D/A and A/D

Copy provided by USPTO from the IFW Image Database on 05/04/2012

convertor 815 may also be coupled to one devices such as LEDs 32A, 32B and the pins 251, 351, 451. Any of the components previously described can be implemented in a number of ways, including embodiments in software. Any of the components previously described can be implemented in a number of ways, including embodiments in software. Thus, the LEDs 32A, 32B, pins 251, 351, 451, controllers 54, switch 56, timers 58, controller 320 may all be characterized as "modules" herein. The modules may include hardware circuitry, single or multi-processor circuits, memory circuits, software program modules and objects, firmware, and combinations thereof, as desired by the architect of the system 10, 30, 50, 60 and as appropriate for particular implementations of various embodiments.

[0053] The apparatus and systems of various embodiments may be useful in applications other than a sales architecture configuration. They are not intended to serve as a complete description of all the elements and features of apparatus and systems that might make use of the structures described herein.

[0054] Applications that may include the novel apparatus and systems of various embodiments include electronic circuitry used in high-speed computers, communication and signal processing circuitry, modems, single or multi-processor modules, single or multiple embedded processors, data switches, and application-specific modules, including multilayer, multi-chip modules. Such apparatus and systems may further be included as sub-components within a variety of electronic systems, such as televisions, cellular telephones, personal computers (e.g., laptop computers, desktop computers, handheld computers, tablet computers, etc.), workstations, radios, video players, audio players (e.g., mp3 players), vehicles, medical devices (e.g., heart monitor, blood pressure monitor, etc.) and others. Some embodiments may include a number of methods.

[0055] It may be possible to execute the activities described herein in an order other than the order described. Various activities described with respect to the methods identified herein can be executed in repetitive, serial, or parallel fashion.

[0056] A software program may be launched from a computer-readable medium in a computer-based system to execute functions defined in the software program. Various programming languages may be employed to create software programs designed to implement and perform the methods disclosed herein. The programs may be structured in an object-orientated format using an object-oriented language such as Java or C++. Alternatively, the programs may be structured in a procedure-orientated format using a procedural language, such as assembly or C. The software components may communicate using a number of mechanisms well known to those skilled in the art, such as application program interfaces or inter-process

Copy provided by USPTO from the IFW Image Database on 05/04/2012

communication techniques, including remote procedure calls. The teachings of various embodiments are not limited to any particular programming language or environment.

[0057] The accompanying drawings that form a part hereof show, by way of illustration and not of limitation, specific embodiments in which the subject matter may be practiced. The embodiments illustrated are described in sufficient detail to enable those skilled in the art to practice the teachings disclosed herein. Other embodiments may be utilized and derived therefrom, such that structural and logical substitutions and changes may be made without departing from the scope of this disclosure. This Detailed Description, therefore, is not to be taken in a limiting sense, and the scope of various embodiments is defined only by the appended claims, along with the full range of equivalents to which such claims are entitled.

[0058] Such embodiments of the inventive subject matter may be referred to herein individually or collectively by the term "invention" merely for convenience and without intending to voluntarily limit the scope of this application to any single invention or inventive concept, if more than one is in fact disclosed. Thus, although specific embodiments have been illustrated and described herein, any arrangement calculated to achieve the same purpose may be substituted for the specific embodiments shown. This disclosure is intended to cover any and all adaptations or variations of various embodiments. Combinations of the above embodiments, and other embodiments not specifically described herein, will be apparent to those of skill in the art upon reviewing the above description.

[0059] The Abstract of the Disclosure is provided to comply with 37 C.F.R. §1.72(b), requiring an abstract that will allow the reader to quickly ascertain the nature of the technical disclosure. It is submitted with the understanding that it will not be used to interpret or limit the scope or meaning of the claims. In the foregoing Detailed Description, various features are grouped together in a single embodiment for the purpose of streamlining the disclosure. This method of disclosure is not to be interpreted to require more features than are expressly recited in each claim. Rather, inventive subject matter may be found in less than all features of a single disclosed embodiment. Thus the following claims are hereby incorporated into the Detailed Description, with each claim standing on its own as a separate embodiment.

Copy provided by USPTO from the IFW Image Database on 05/04/2012

Claims

What is claimed is:

1. A method of treating dermalogical tissue, comprising:

placing a material including a plurality of pins extending from the material inner surface on or near dermalogical tissue to be treated with sufficient force to cause at least one pin to penetrate the tissue; and

energizing a signal generator electrically coupled to the at least one pin to cause vibration of the at least one pin.

2. The method of claim 1, further comprising placing a chemical one of on at least a portion of the dermalogical tissue and at least a portion of material inner surface.

3. The method of claim 1, further comprising placing a chemical on a portion of the material inner surface.

4. The method of claim 2, wherein the chemical is a photoactive chemical.

5. The method of claim 1, comprising placing a material including a plurality of pins extending from the material inner surface and including at least one embedded LED therein on or near dermalogical tissue to be treated with sufficient force to cause at least one pin to penetrate the tissue; and energizing the LED.

6. The method of claim 5, comprising energizing the LED to generate an infra-red signal toward dermalogical tissue to be treated.

7. The method of claim 1, comprising energizing a signal generator electrically coupled to the at least one pin to cause vibration of the at least one pin for a predetermined time interval.

8. The method of claim 1, comprising placing the material including at least one embedded LED, a power source, and a controller coupling the LED to the battery therein on or near dermalogical tissue to be treated; and energizing the LED to generate an infra-red signal toward dermalogical tissue to be treated for a predetermined time interval.

Copy provided by USPTO from the IFW Image Database on 05/04/2012

9. The method of claim 1, comprising placing a material including a plurality of pins extending from the material inner surface on or near dermalogical tissue to be treated with sufficient force to cause at least one pin to penetrate the tissue, the material including the signal generator and a power source.

10. The method of claim 1, energizing a signal generator electrically coupled to the at least one pin with a first signal to cause vibration of the at least one pin.

11. An apparatus for treating dermalogical tissue, comprising:

a material including a plurality of pins extending from the material inner surface, at least one pin capable of penetrating the tissue on or near dermalogical tissue to be treated; and

a signal generator electrically coupled to the at least one pin and causing vibration of the at least one pin when the signal generator is activated.

12. The apparatus for claim 11, a chemical placed on one of at least a portion of the dermalogical tissue and at least a portion of material inner surface.

13. The apparatus for claim 11, further comprising a chemical placed on a portion of the material inner surface.

14. The apparatus for claim 12, wherein the chemical is a photoactive chemical.

15. The apparatus for claim 11, comprising a material including a plurality of pins extending from the material inner surface and at least one embedded LED therein, at least one pin capable of penetrating the tissue on or near dermalogical tissue to be treated.

16. The apparatus for claim 15, comprising an LED energizing module, the module causing the LED to generate an infra-red signal toward dermalogical tissue to be treated when activated.

17. The apparatus for claim 11, the signal generator electrically coupled to the at least one pin and causing vibration of the at least one pin for a predetermined time interval when the signal generator is activated.

18. The apparatus for claim 11, further comprising a power source and a controller.

Copy provided by USPTO from the IFW Image Database on 05/04/2012

19. The apparatus for claim 11, the material including the signal generator and a power source.

20. The apparatus for claim 11, the signal generator electrically coupled to the at least one pin and to at least one another pin, the signal generator causing the vibration of the at least one pin with a first signal and causing the vibration of the at least one another pin with a second signal when activated.

Copy provided by USPTO from the IFW Image Database on 05/04/2012

PATENT APPLICATION

DECLARATION AND POWER OF ATTORNEY FOR PATENT APPLICATION	ATTORNEY DOCKET NO. NA001US

As a below named inventor, I hereby declare that:
My residence/post office address and citizenship are as stated below next to my name;
I believe I am the original, first and sole inventor (if only one name is listed below) or an original, first and joint inventor (if plural names are listed below) of the subject matter which is claimed and for which a patent is sought on the invention entitled:
METHOD, SYSTEM, AND APPARATUS FOR DERMALOGICAL TREATMENT
the specification of which is attached hereto unless the following box is checked:

( ) was filed on _____ as US Application Serial No. or PCT International Application Number _____ and was amended on _____ (if applicable).

I hereby state that I have reviewed and understood the contents of the above-identified specification, including the claims, as amended by any amendment(s) referred to above. I acknowledge the duty to disclose all information which is material to patentability as defined in 37 CFR 1.56.

Foreign Application(s) and/or Claim of Foreign Priority

I hereby claim foreign priority benefits under Title 35, United States Code Section 119 of any foreign application(s) for patent or inventor(s) certificate listed below and have also identified below any foreign application for patent or inventor(s) certificate having a filing date before that of the application on which priority is claimed:

COUNTRY	APPLICATION NUMBER	DATE FILED	PRIORITY CLAIMED UNDER 35 U.S.C. 119
PCT	PCT/US2008/074131	8/22/2008	YES:_____ NO:_____
			YES:_____ NO:_____

Provisional Application

I hereby claim the benefit under Title 35, United States Code Section 119(e) of any United States provisional application(s) listed below:

APPLICATION SERIAL NUMBER	FILING DATE

U.S. Priority Claim

I hereby claim the benefit under Title 35, United States Code, Section 120 of any United States application(s) listed below and, insofar as the subject matter of each of the claims of this application is not disclosed in the prior United States application in the manner provided by the first paragraph of Title 35, United States Code Section 112, I acknowledge the duty to disclose material information as defined in Title 37, Code of Federal Regulations, Section 1.56(a) which occurred between the filing date of the prior application and the national or PCT international filing date of this application:

APPLICATION SERIAL NUMBER	FILING DATE	STATUS(patented/pending/abandoned)

POWER OF ATTORNEY:

As a named inventor, I hereby appoint the following attorney(s) and/or agent(s) listed below to prosecute this application and transact all business in the Patent and Trademark Office connected therewith.

Merle Richman, Reg. No. 38282

Send Correspondence to:	Direct Telephone Calls To:
Merle Richman Merle W. Richman, Cust ID - 26338 Customer ID - 26338 PO Box 3333 La Jolla, CA 92038-3333	Merle Richman 858 320-2030

I hereby declare that all statements made herein of my own knowledge are true and that all statements made on information and belief are believed to be true; and further that these statements were made with the knowledge that willful false statements and the like so made are punishable by fine or imprisonment, or both, under Section 1001 of Title 18 of the United States Code and that such willful false statements may jeopardize the validity of the application or any patent issued thereon.

Full Name of Inventor: Jongju Na **Citizenship:** KR

Residence: 210-801 ParkRio Apt, Shinchun dong, Songpa-Gu, Seoul Korea 138-240

Post Office Address: Same

Inventor's Signature **Date**

Copy provided by USPTO from the IFW Image Database on 05/04/2012

Full Name of Inventor: Merle Richman Citizenship: US

Residence: 8376 La Jolla Shores Dr, La Jolla, CA 92037 USA

Post Office Address: Same

Inventor's Signature Date

Full Name of Inventor: Citizenship:

Residence:

Post Office Address:

Inventor's Signature Date

Full Name of Inventor: Citizenship:

Residence:

Post Office Address:

Inventor's Signature Date

Full Name of Inventor: Citizenship:

Residence:

Post Office Address:

Inventor's Signature Date

Full Name of Inventor: Citizenship:

Residence:

Post Office Address:

Inventor's Signature Date

Full Name of Inventor: Citizenship:

Residence:

Post Office Address:

Inventor's Signature Date

Copy provided by USPTO from the IFW Image Database on 05/04/2012

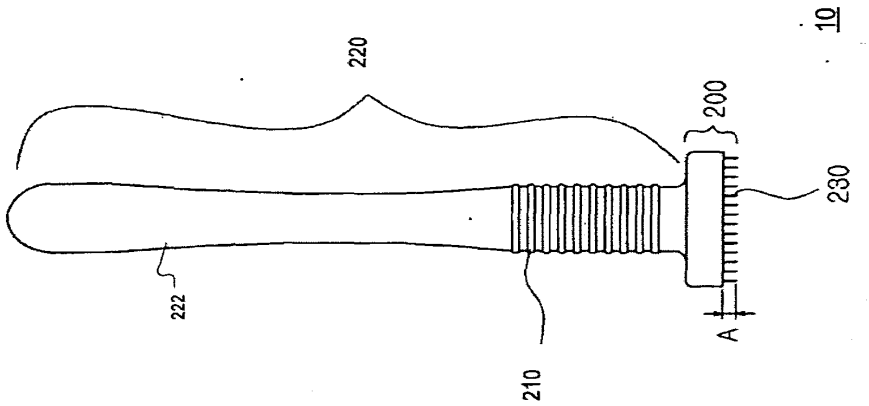

FIGURE 1B

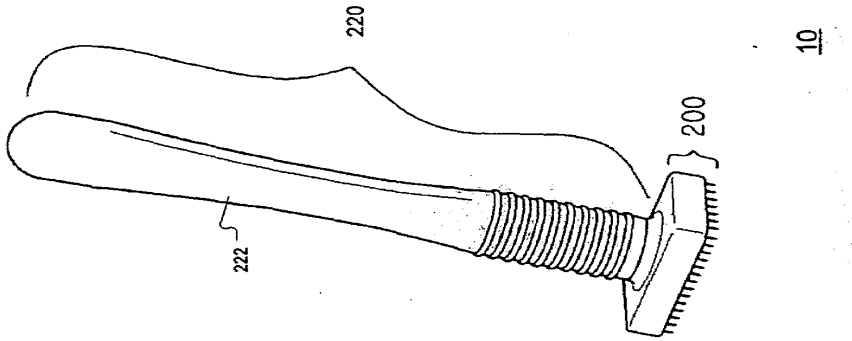

FIGURE 1A

Copy provided by USPTO from the IFW Image Database on 05/04/2012

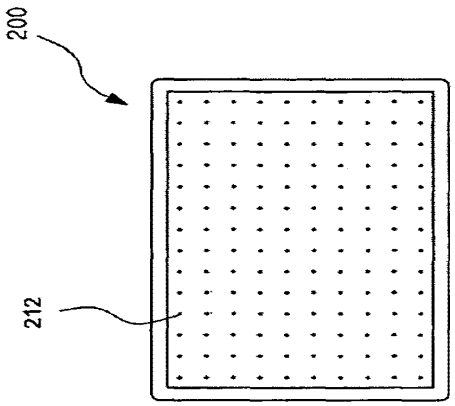

FIGURE 1D

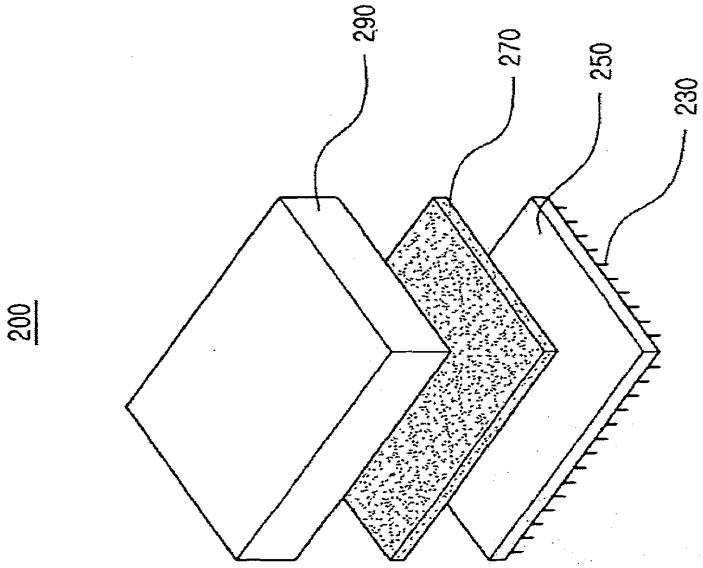

FIGURE 1C

Copy provided by USPTO from the IFW Image Database on 05/04/2012

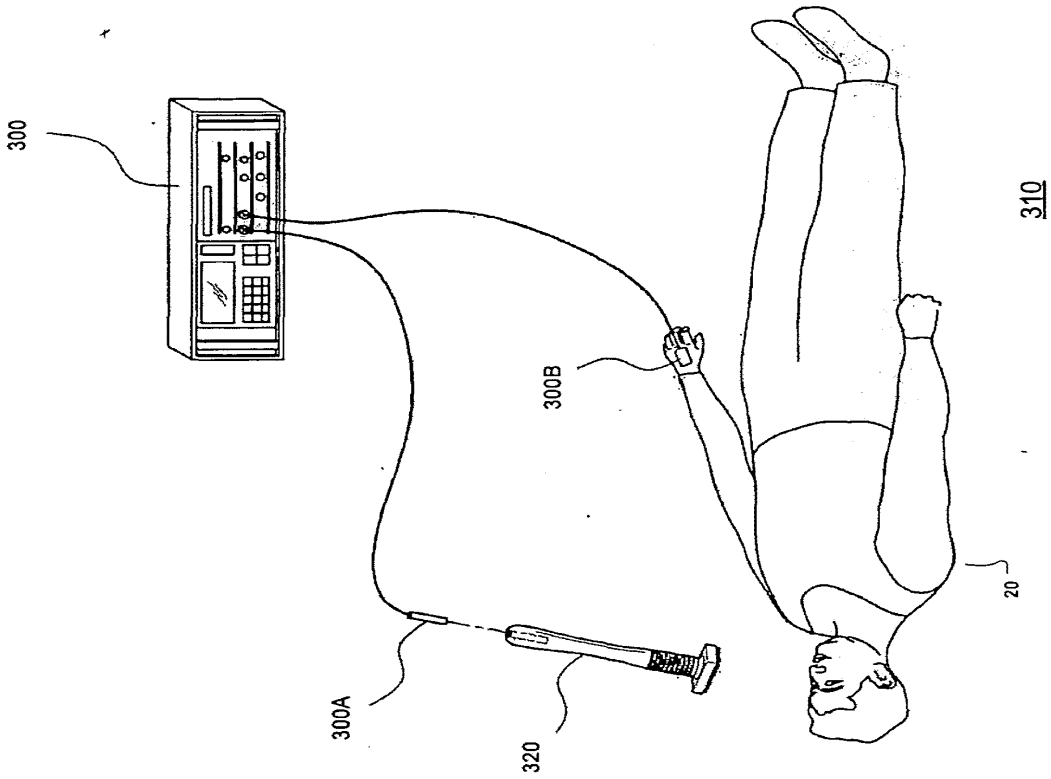

FIGURE 2A

Copy provided by USPTO from the IFW Image Database on 05/04/2012

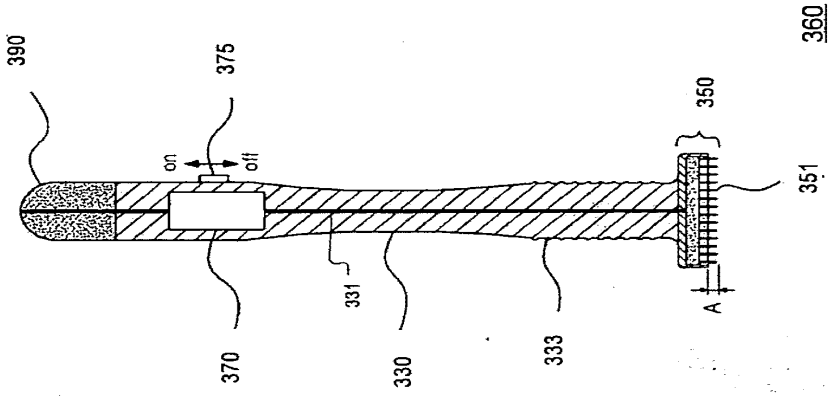

FIGURE 2C

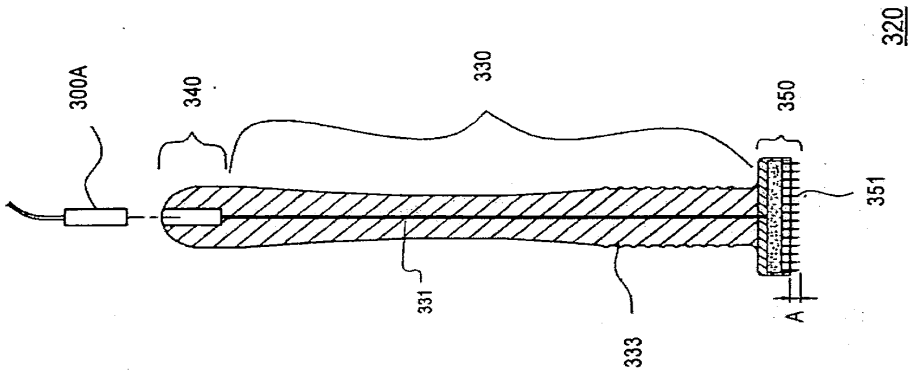

FIGURE 2B

Copy provided by USPTO from the IFW Image Database on 05/04/2012

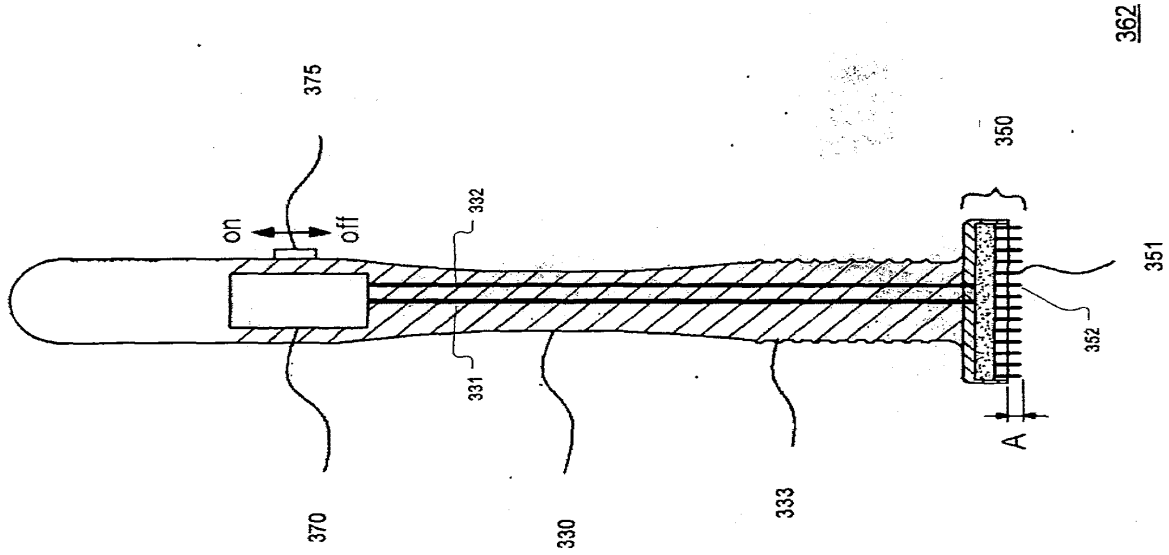

FIGURE 2D

Copy provided by USPTO from the IFW Image Database on 05/04/2012

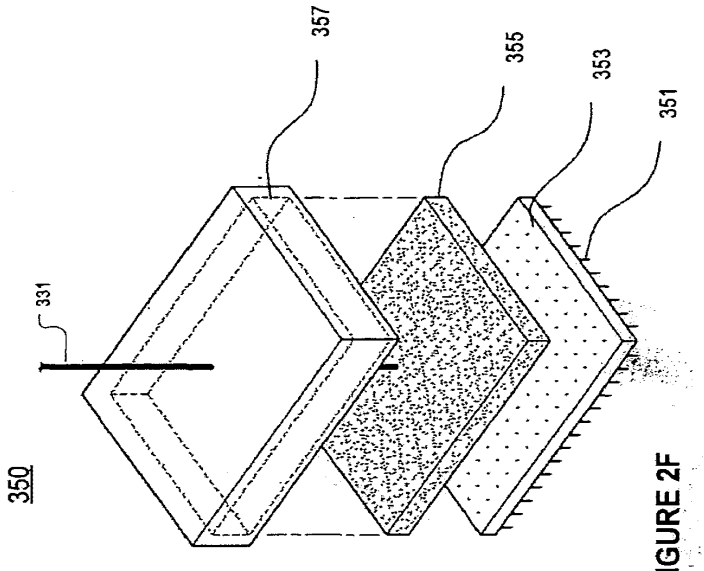

FIGURE 2F

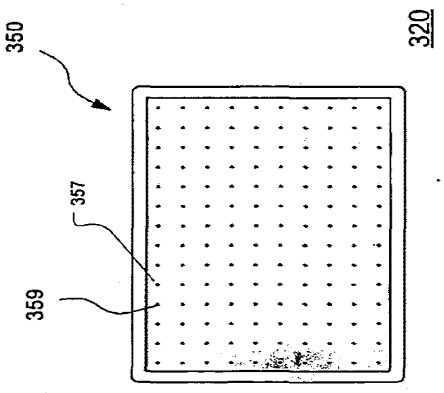

FIGURE 2E

Copy provided by USPTO from the IFW Image Database on 05/04/2012

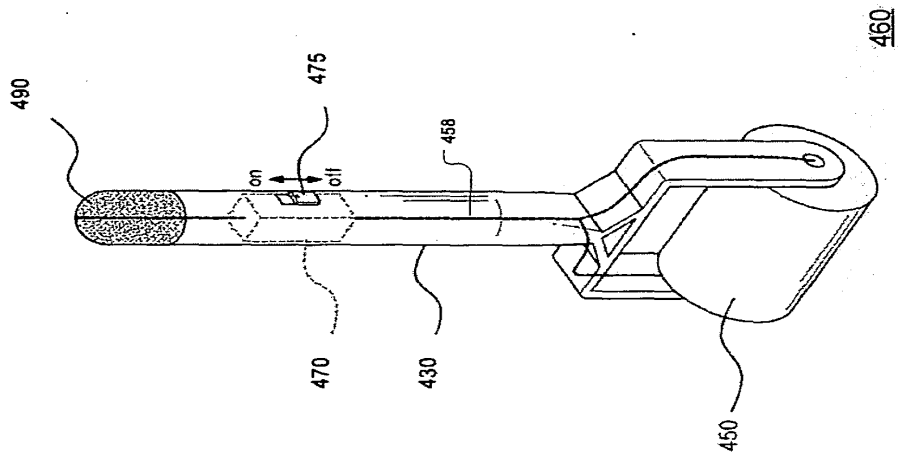

FIGURE 3B

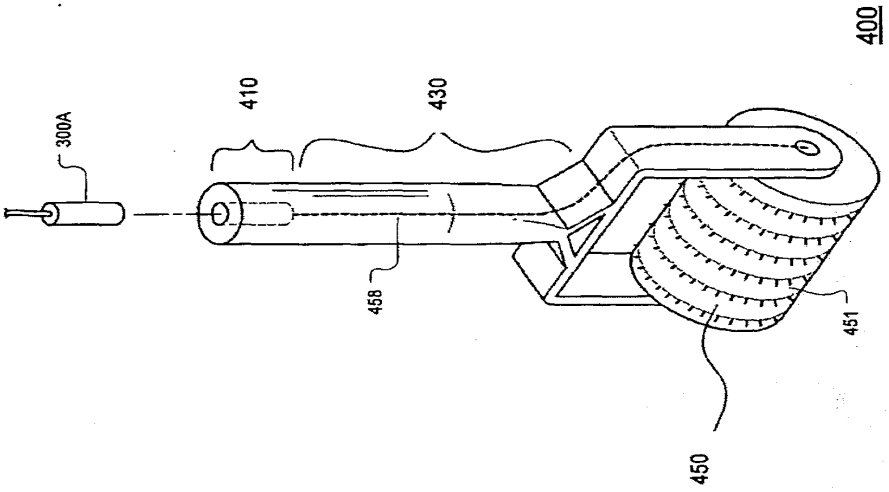

FIGURE 3A

Copy provided by USPTO from the IFW Image Database on 05/04/2012

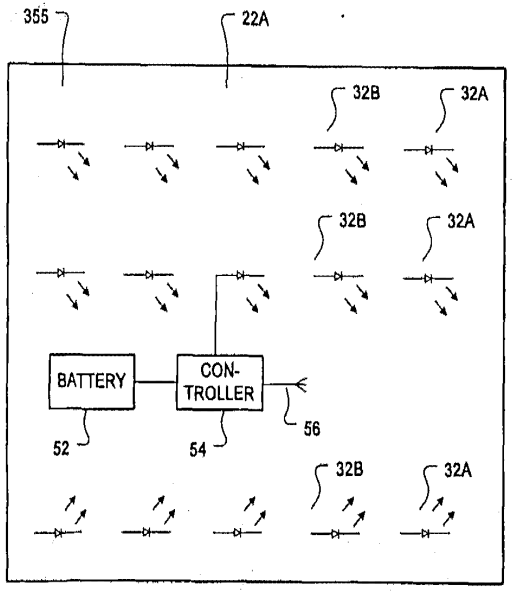

FIGURE 4A 520

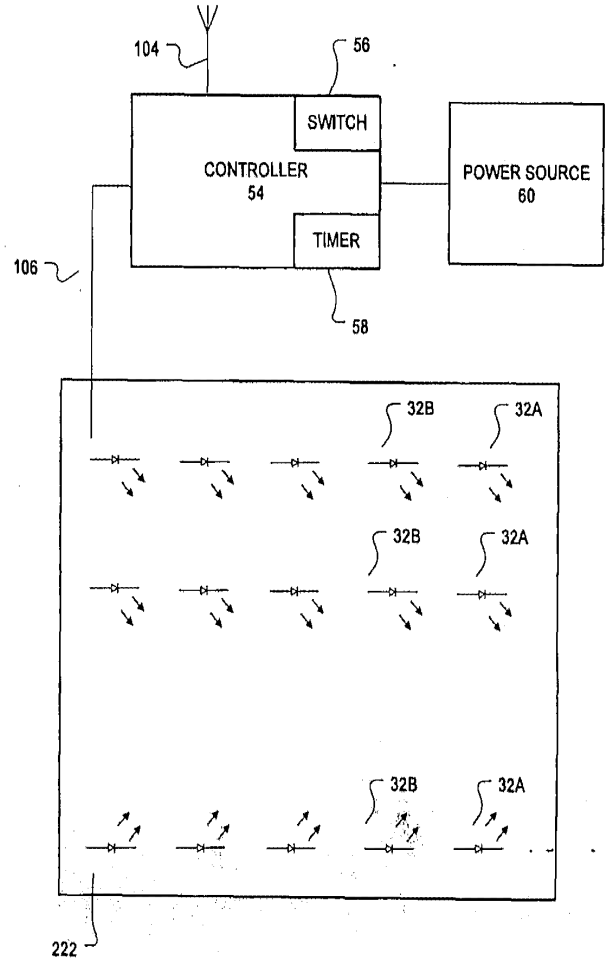

FIGURE 4B 510

Copy provided by USPTO from the IFW Image Database on 05/04/2012

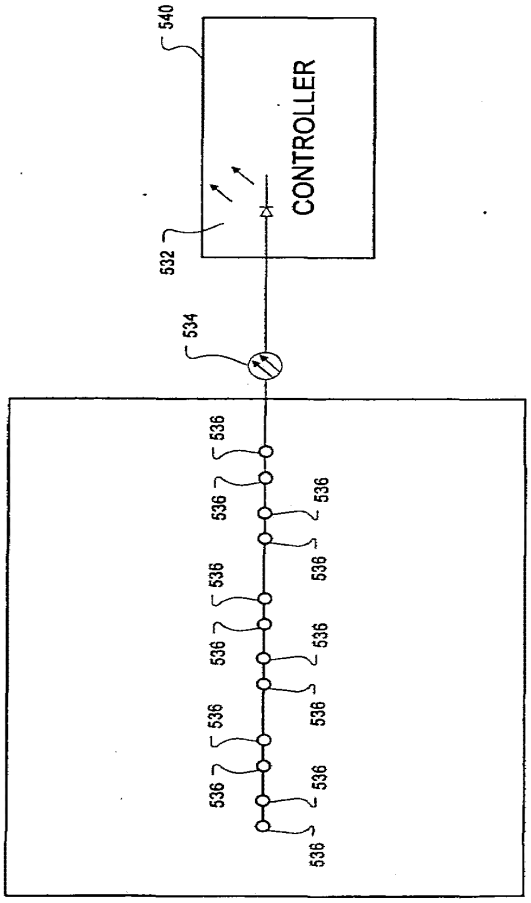

FIGURE 4C

Copy provided by USPTO from the IFW Image Database on 05/04/2012

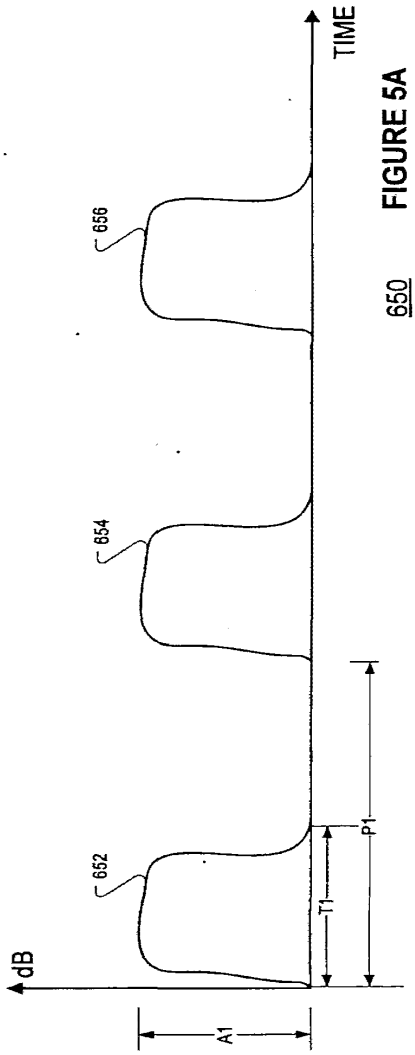

FIGURE 5A

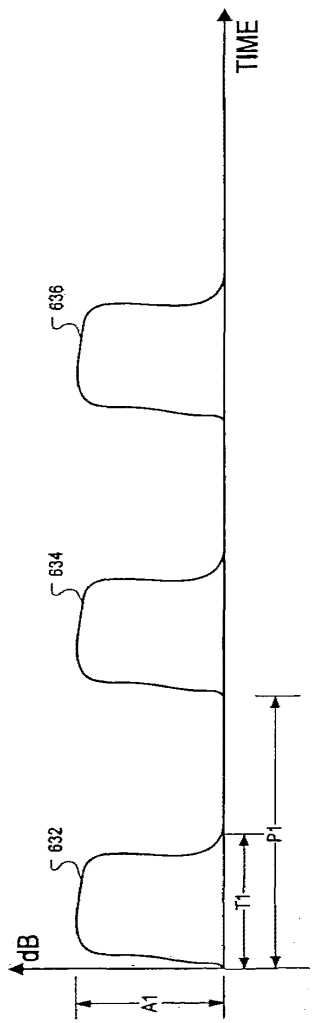

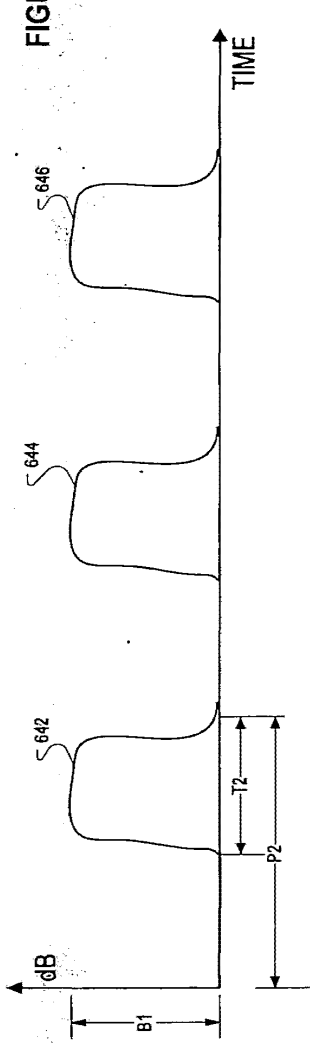

FIGURE 5B

Copy provided by USPTO from the IFW Image Database on 05/04/2012

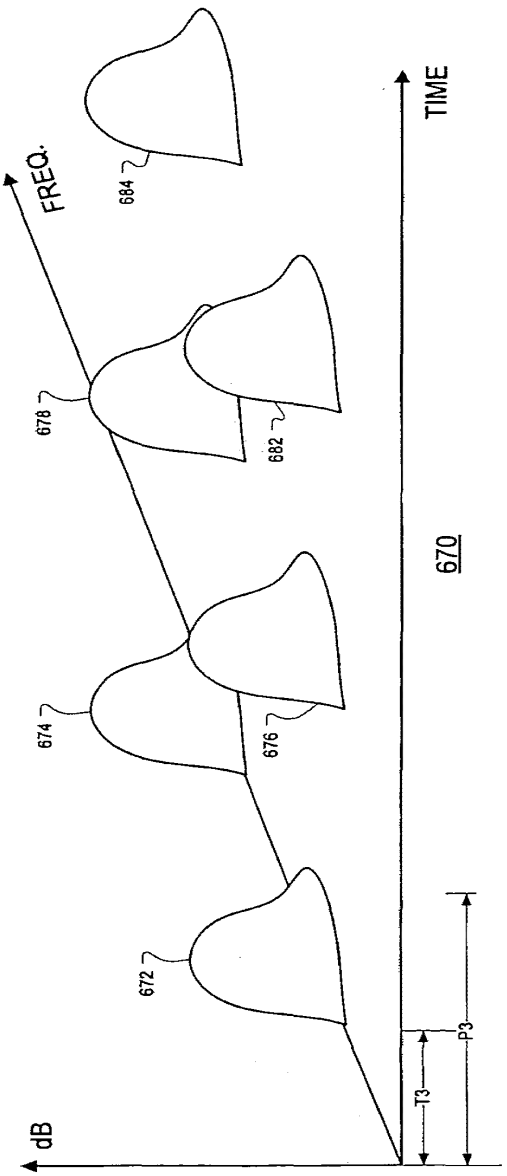

FIGURE 6

Copy provided by USPTO from the IFW Image Database on 05/04/2012

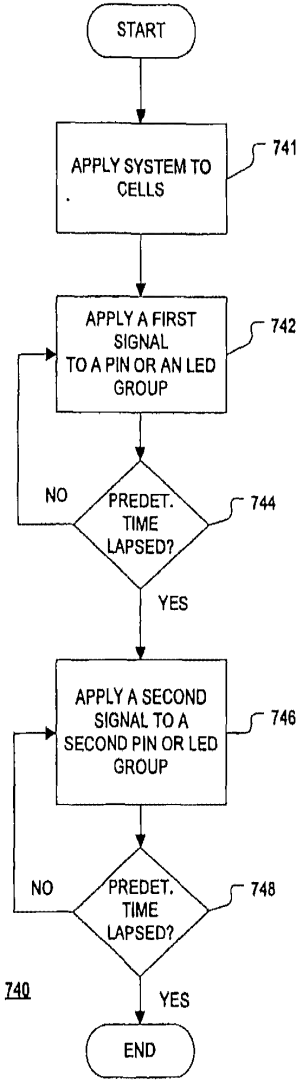

FIGURE 7A

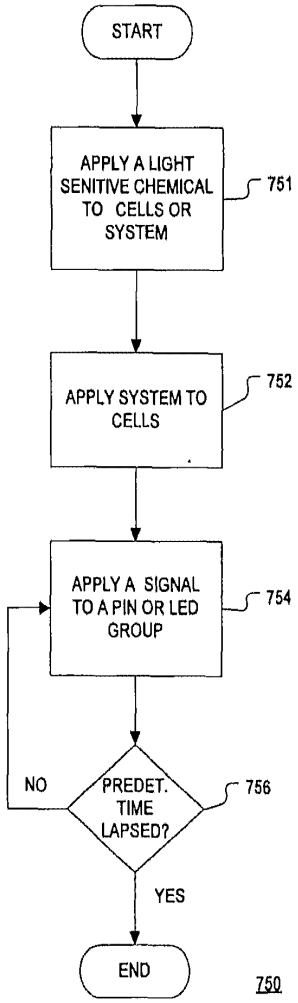

FIGURE 7B

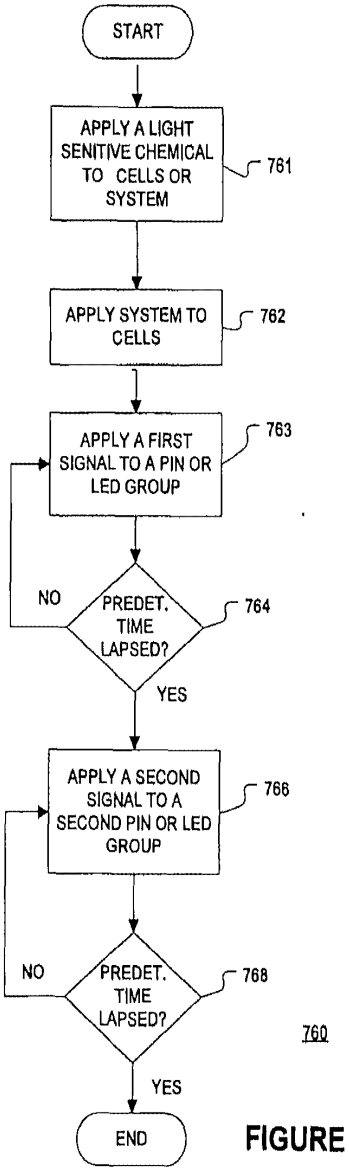

FIGURE 7C

Copy provided by USPTO from the IFW Image Database on 05/04/2012

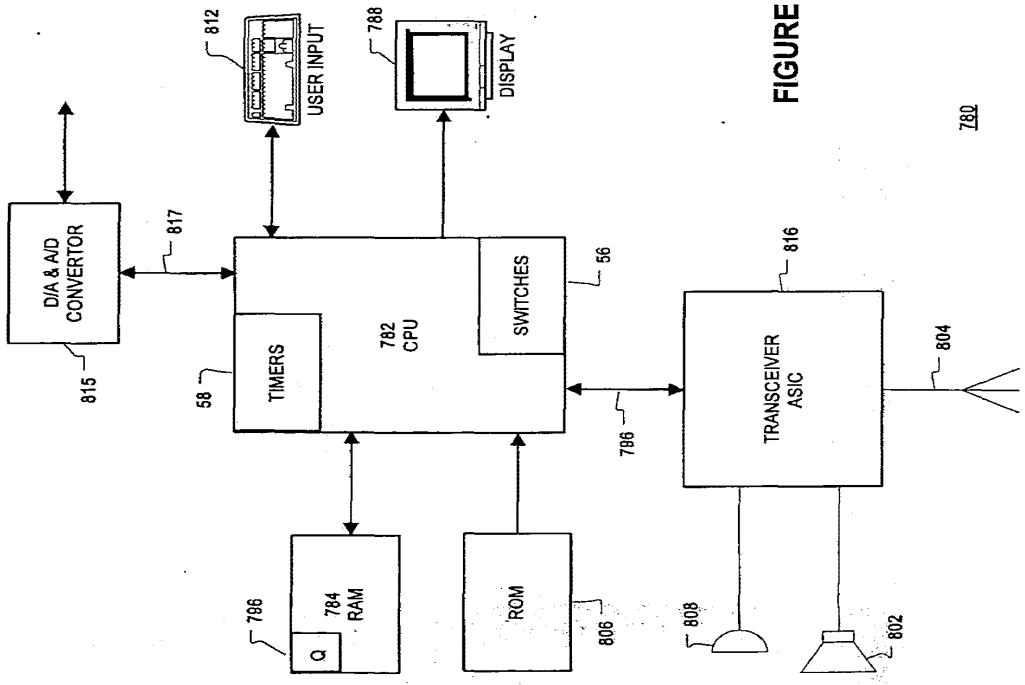

FIGURE 8

Copy provided by USPTO from the IFW Image Database on 05/04/2012

IN THE UNITED STATES PATENT AND TRADEMARK OFFICE

Applicant(s): Na	
Application No.: Not Yet Assigned	Art Unit: Unknown
Filed: Herewith	Examiner: Unknown
Title: METHOD, SYSTEM, AND APPARATUS FOR DERMALOGICAL TREATMENT	
Attorney Docket No.: NA001US	

PRELIMINARY AMENDMENT UNDER 37 CFR 1.115

Commissioner for Patents
P.O. Box 1450
Alexandria, VA 22313-1450

Dear Sir:

Please amend this application as follows:

Copy provided by USPTO from the IFW Image Database on 05/04/2012

In the claims:

1. (Currently Amended) A method of treating dermalogical tissue, comprising:

placing a ~~material~~ device including a distal end including a plurality of pins extending from ~~the~~ a ~~material~~ device distal end inner surface on or near dermalogical tissue to be treated with sufficient force to cause at least one pin to penetrate ~~the~~ tissue and create a micro-wound in the tissue; and

energizing a signal generator electrically coupled to the at least one pin to cause vibration of the at least one pin sufficient to increase the tissue micro-wound.

2. (Currently Amended) The method of claim 1, further comprising placing a dermalogical chemical one of on at least a portion of the dermalogical tissue, ~~and~~ at least a portion of ~~material~~ the inner surface, and the at least one pin.

3. (Currently Amended) The method of claim 1, ~~further comprising placing a chemical on a portion of the material inner surface~~ wherein the device further includes a proximal handle and elastomer between the proximal handle and distal end.

4. (Currently Amended) The method of claim 2, wherein the ~~chemical is a photoactive chemical~~ signal generator is located at least partially within the proximal handle.

5. (Currently Amended) The method of claim 1, ~~comprising placing a material including a plurality of pins extending from the material~~ wherein the inner surface ~~and~~ further includes ~~including~~ at least one embedded LED therein ~~on or near dermalogical tissue to be treated with sufficient force to cause at least one pin to penetrate the tissue~~; and further including energizing the LED.

6. (Currently Amended) The method of claim 5, comprising energizing the LED to generate an infra-red signal ~~toward dermalogical tissue to be treated~~.

Copy provided by USPTO from the IFW Image Database on 05/04/2012

7. (Currently Amended) The method of claim 1, further comprising energizing ~~a~~ the signal generator electrically coupled to the at least one pin for a predetermined time interval to cause vibration of the at least one pin sufficient to increase the tissue micro-wound.

8. (Currently Amended) The method of claim [1]3, ~~comprising placing the material~~ wherein the inner surface includes ~~including~~ at least one embedded LED, the proximal handle at least partially includes a power source, the signal generator, and a signal generator controller ~~coupling the LED to the battery therein on or near dermalogical tissue to be treated;~~ and further including energizing the LED to generate an infra-red signal ~~toward dermalogical tissue to be treated~~ for a predetermined time interval.

9. (Currently Amended) The method of claim [1]3, ~~comprising placing a material including a plurality of pins extending from the material inner surface on or near dermalogical tissue to be treated with sufficient force to cause at least one pin to penetrate the tissue, the material including~~ wherein the proximal handle includes the signal generator, ~~and~~ a power source, and a signal generator controller.

10. (Currently Amended) The method of claim 1, energizing a signal generator electrically coupled to the at least one pin with a ~~first~~ signal having a predetermined one of frequency and set of frequencies to cause vibration of the at least one pin sufficient to increase the tissue micro-wound.

11. (Currently Amended) An apparatus for treating dermalogical tissue, comprising:

a ~~material~~ device including a distal end including a plurality of pins extending from ~~the~~ a ~~material~~ device distal end inner surface, at least one pin capable of penetrating the tissue and creating a micro-wound ~~on or near dermalogical~~ in tissue to be treated; and

a signal generator electrically coupled to the at least one pin and causing vibration of the at least one pin when the signal generator is activated sufficient to increase the tissue micro-wound.

Copy provided by USPTO from the IFW Image Database on 05/04/2012

12. (Currently Amended) The apparatus for claim 11, a dermalogical chemical placed one of on at least a portion of the dermalogical tissue, ~~and~~ at least a portion of ~~material~~ the inner surface, and the at least one pin.

13. (Currently Amended) The apparatus for claim 11, ~~further comprising a chemical placed on a portion of the material inner surface~~ wherein the device further includes a proximal handle and elastomer between the proximal handle and distal end.

14. (Currently Amended) The apparatus for claim 12, wherein the ~~chemical is a photoactive chemical~~ signal generator is located at least partially within the proximal handle.

15. (Currently Amended) The apparatus for claim 11, ~~comprising a material including a plurality of pins extending from the material~~ inner surface wherein the inner surface ~~and~~ further includes ~~including~~ at least one embedded LED therein ~~on or near dermalogical tissue to be treated with sufficient force to cause at least one pin to penetrate the tissue~~; and the signal generator capable of energizing the LED.

16. (Currently Amended) The apparatus for claim 15, wherein the signal generator includes ~~comprising~~ an LED energizing module, the module causing the LED to generate an infra-red signal ~~toward dermalogical tissue to be treated~~ when activated.

17. (Currently Amended) The apparatus for claim 11, the signal generator ~~electrically coupled to the at least one pin and~~ causing vibration of the at least one pin for a predetermined time interval when the signal generator is activated, sufficient to increase the tissue micro-wound.

18. (Currently Amended) The apparatus for claim [11]13, ~~further~~ wherein the inner surface includes at least one embedded LED and the proximal handle at least partially includes a power source, the signal generator, and a signal generator controller.

Copy provided by USPTO from the IFW Image Database on 05/04/2012

19. (Currently Amended) The apparatus for claim [11]13 ~~the material~~ ~~including~~ wherein the proximal handle includes the signal generator, ~~and~~ a power source, and a signal generator controller.

20. (Currently Amended) The apparatus for claim 11, the signal generator ~~electrically coupled to the at least one pin and to at least one another pin, the signal generator~~ causing the vibration of the at least one pin with a ~~first~~ signal having a predetermined one of frequency and set of frequencies sufficient to increase the tissue micro-wound ~~and causing the vibration of the at least one another pin with a second signal when activated~~.

Copy provided by USPTO from the IFW Image Database on 05/04/2012

REMARKS

Claims 1-20 were pending. Claims 1-20 are amended. Entry of this preliminary amendment is respectfully requested. Reconsideration and further examination is respectfully requested.

Applicants have made a diligent effort to place the claims in condition for allowance. However, should there remain unresolved issues that require adverse action, it is respectfully requested that the Examiner telephone Merle Richman, Applicants' Attorney at 858 320-2030 so that such issues may be resolved as expeditiously as possible.

For these reasons, and in view of the above amendments, this application is now considered to be in condition for allowance and such action is earnestly solicited.

Respectfully Submitted,

2/22/2011_____
Date

/mwresq/_____
Merle Richman
Patent Attorney
Reg. No. 38282

Merle Richman
Patent Attorney
Customer ID - 26338
PO Box 3333
La Jolla, CA 92038-3333

Tel. 858 320-2030

Copy provided by USPTO from the IFW Image Database on 05/04/2012

WIPO
WORLD
INTELLECTUAL PROPERTY
ORGANIZATION

DOCUMENT MADE AVAILABLE UNDER THE PATENT COOPERATION TREATY (PCT)

International application number:		**PCT/KR2012/001335**
International filing date:		**22 February 2012 (22.02.2012)**
Document type:		**Certified copy of priority document**
Document details:	Country/Office:	**US**
	Number:	**13/060,274**
	Filing date:	**30 March 2011 (30.03.2011)**
Date of receipt at the International Bureau:		**20 June 2012 (20.06.2012)**

Remark: Priority document submitted or transmitted to the International Bureau in compliance with Rule 17.1(a),(b) or (b-*bis*)

34, chemin des Colombettes
1211 Geneva 20, Switzerland
www.wipo.int

(12) 특허협력조약에 의하여 공개된 국제출원

(19) 세계지식재산권기구
국제사무국

(43) 국제공개일
2012 년 9 월 7 일 (07.09.2012)

WIPO | PCT

(10) 국제공개번호
WO 2012/118293 A2

(51) 국제특허분류:
A61N 1/30 (2006.01) *A61M 37/00* (2006.01)
A61H 23/02 (2006.01) *A61N 5/06* (2006.01)

(21) 국제출원번호: PCT/KR2012/001335

(22) 국제출원일: 2012 년 2 월 22 일 (22.02.2012)

(25) 출원언어: 한국어

(26) 공개언어: 한국어

(30) 우선권정보:
61/449,080 2011 년 3 월 3 일 (03.03.2011) US
13/060,274 2011 년 3 월 30 일 (30.03.2011) US

(72) 발명자; 겸
(71) 출원인 : 라종주 (NA, Jongju) [KR/KR]; 서울특별시 송파구 방이동 225 번지 한양 3 차아파트 1-901, 138-050 Seoul (KR).

(74) 대리인: 특허법인 맥 (MAC PATENT & LAW FIRM); 서울특별시 서초구 양재동 15-3 화승빌딩 5 층, 137-130 Seoul (KR).

(81) 지정국 (별도의 표시가 없는 한, 가능한 모든 종류의 국내 권리의 보호를 위하여): AE, AG, AL, AM, AO, AT, AU, AZ, BA, BB, BG, BH, BR, BW, BY, BZ, CA, CH, CL, CN, CO, CR, CU, CZ, DE, DK, DM, DO, DZ, EC, EE, EG, ES, FI, GB, GD, GE, GH, GM, GT, HN, HR, HU, ID, IL, IN, IS, JP, KE, KG, KM, KN, KP, KR, KZ, LA, LC, LK, LR, LS, LT, LU, LY, MA, MD, ME, MG, MK, MN, MW, MX, MY, MZ, NA, NG, NI, NO, NZ, OM, PE, PG, PH, PL, PT, QA, RO, RS, RU, RW, SC, SD, SE, SG, SK, SL, SM, ST, SV, SY, TH, TJ, TM, TN, TR, TT, TZ, UA, UG, US, UZ, VC, VN, ZA, ZM, ZW.

(84) 지정국 (별도의 표시가 없는 한, 가능한 모든 종류의 역내 권리의 보호를 위하여): ARIPO (BW, GH, GM, KE, LR, LS, MW, MZ, NA, RW, SD, SL, SZ, TZ, UG, ZM, ZW), 유라시아 (AM, AZ, BY, KG, KZ, MD, RU, TJ, TM), 유럽 (AL, AT, BE, BG, CH, CY, CZ, DE, DK, EE, ES, FI, FR, GB, GR, HR, HU, IE, IS, IT, LT, LU, LV, MC, MK, MT, NL, NO, PL, PT, RO, RS, SE, SI, SK, SM, TR), OAPI (BF, BJ, CF, CG, CI, CM, GA, GN, GQ, GW, ML, MR, NE, SN, TD, TG).

[다음 쪽 계속]

(54) **Title**: SKIN CARE METHOD, APPARATUS AND SYSTEM

(54) **발명의 명칭** : 피부 미용방법, 미용기 및 미용시스템

[Fig. 1a]

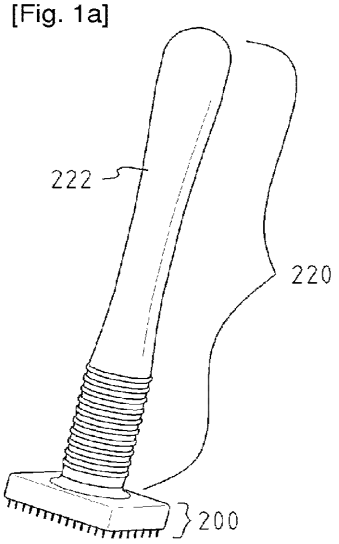

10

(57) **Abstract**: Disclosed are a skin care method, an apparatus thereof and a system thereof. The present invention comprises a flat plate portion in which a plurality of metallic needle bodies are inserted onto a surface thereof; a handle portion is coupled to the flat plate portion on the central axis of the flat plate portion; and an electricity input portion which is coupled to the handle portion and is connected to a connection terminal from an electricity generation device so as to allow an electric current to flow through the plurality of metallic needle bodies. The absorption of a solution, a cream, a gel, an ointment and the like on a skin layer according to the present invention is remarkably increased by applying an ion stimulus or an electrical stimulus of predetermined frequency to the skin layer, thereby enabling effective regeneration of skin tissue.

(57) **요약서**: 피부 미용방법, 미용기 및 미용시스템이 개시된다. 본 발명은, 일면에 복수개의 금속성 침체가 삽입된 평판부, 평판부의 중심축 상에서 평판부에 결합되는 손잡이부, 및 손잡이부에 결합되며, 복수개의 금속성 침체에 전기가 도통되도록 전기발생 장치로부터의 연결단자와 접속되는 전기 입력부를 구비한다. 본 발명에 의하면, 피부층에서의 이온 자극 및 소정 주파수의 전기적인 진동 자극을 가함으로써, 피부층에서의 용액, 크림, 젤, 연고제 등의 흡수율을 획기적으로 높여 피부조직의 효과적인 재생이 가능하다.

WO 2012/118293 A2

공개:

— 국제조사보고서 없이 공개하며 보고서 접수 후 이를 별도 공개함 (규칙 48.2(g))

Ex. 2114-173

명세서

발명의 명칭: 피부 미용방법, 미용기 및 미용시스템

기술분야

[1] 관련출원의 상호참조

[2] 본 출원은 "전기 시스템, 피부, 피부 보호 및 미용기"란 명칭으로 2008년 8월 8일에 출원한 한국특허출원 제 10-2008-0076993호, "피부 미용방법, 미용기 및 미용시스템"이란 명칭으로 2008년 8월 22일 출원한 대리인 정리번호 NA001PCT의 PCT출원 제 PCT/US2008/074131호, 및 "피부 미용방법, 미용기 및 미용시스템"이란 명칭으로 2011년 2월 22일 출원한 대리인 정리번호 NA001US의 미국출원 제 13/060,274호에 대한 우선권의 이익을 청구하며, 이들은 각각 참조로서 그 전체를 본원에 인용한다.

[3] 본원에 기술한 다양한 실시예는 피부 조직의 미용에 사용하는 시스템 및 방법을 포함하여, 피부 조직의 미용에 관한 것이다.

배경기술

[4] 본 발명은 피부 조직의 미용에 바람직할 수 있는 그러한 시술법을 제공한다.

발명의 상세한 설명

기술적 과제

[5] 본 발명의 목적은 피부 미용기, 미용시스템, 및 미용방법을 제공하는데 있다.

과제 해결 수단

[6] 상술한 목적을 달성하기 위한, 본 발명의 피부 미용방법은 기구의 말단면으로부터 돌출가능한 다수의 바늘을 갖는 말단을 구비하는 기구를, 시술할 피부 조직 위나 근처에 배치하는 단계와; 돌출가능한 바늘에 전기적으로 연결된 모터에 전원을 인가해서 상기 말단면으로부터 원하는 거리만큼 하나 이상의 바늘을 돌출시키는 단계와; 상기 하나 이상의 바늘에 전기적으로 연결된 신호 발생기를 통해 하나 이상의 바늘에 전원을 인가해서 하나 이상의 바늘을 진동시키는 단계를 포함한다.

[7] 또한, 본 발명은 말단면 및 다수의 돌출가능한 바늘을 구비하고, 그의 말단면으로부터 하나 이상의 바늘이 돌출가능한 기구와; 상기 하나 이상의 바늘에 전기적으로 연결되고, 특정 신호에 의해 전원이 인가되면 상기 말단면으로부터 원하는 거리만큼 상기 하나 이상의 바늘이 돌출되도록 하는 모터와; 상기 하나 이상의 바늘에 전기적으로 연결되어, 특정 신호에 의해 하나 이상의 바늘에 의해 전원이 인가되면 하나 이상의 바늘의 진동을 일으키는 신호 발생기를 포함하는 피부 조직의 미용기를 제공한다.

발명의 효과

[8] 본 발명에 의하면, 피부층에서의 이온 자극 및 소정 주파수의 전기적인 진동 자극을 가함으로써, 피부층에서의 용액, 크림, 젤, 연고제 등의 흡수율을

획기적으로 높여 피부조직의 효과적인 재생이 가능하다.

도면의 간단한 설명

[9] 도 1a는 다양한 실시예에 따르는 피부 미용기의 간단한 사시도이다.

[10] 도 1b는 다양한 실시예에 따르는 피부 미용기의 간단한 측면도이다.

[11] 도 1c는 다양한 실시예에 따르는 피부 미용기 층의 간단한 분해 사시도이다.

[12] 도 1d는 다양한 실시예에 따르는 피부 미용기의 간단한 저면도이다.

[13] 도 2a는 다양한 실시예에 따르는 피부 미용시스템의 간단한 사시도이다.

[14] 도 2b는 다양한 실시예에 따르는 피부 미용기의 간단한 단면도이다.

[15] 도 2c는 다양한 실시예에 따르는 다른 피부 미용기의 간단한 단면도이다.

[16] 도 2d는 다양한 실시예에 따르는 다른 피부 미용기의 간단한 단면도이다.

[17] 도 2e는 다양한 실시예에 따르는 피부 미용기의 간단한 저면도이다.

[18] 도 2f는 다양한 실시예에 따르는 피부 미용기 층의 간단한 분해 사시도이다.

[19] 도 3a는 다양한 실시예에 따르는 다른 피부 미용기의 간단한 사시도이다.

[20] 도 3b는 다양한 실시예에 따르는 다른 피부 미용기의 간단한 사시도이다.

[21] 도 4a는 다양한 실시예에 따르는 다른 피부 미용기 층의 간단한 블록도이다.

[22] 도 4b는 다양한 실시예에 따르는 다른 피부 미용시스템의 미용기 및 층의 간단한 블록도이다.

[23] 도 4c는 다양한 실시예에 따르는 다른 피부 미용시스템의 미용기 및 층의 간단한 블록도이다.

[24] 도 5a 내지 도 6은 다양한 실시예에 따르는 하나 이상의 피부 미용시스템에 적용할 수 있는 신호 그래프이다.

[25] 도 7a 내지 7c는 다양한 실시예에 따르는 피부 미용시스템의 시술 알고리즘을 보이는 흐름도이다.

[26] 도 8은 다양한 실시예에 따르는 구성품의 블록도이다.

[27] 도 9a는 다양한 실시예에 따르는 피부 미용 아키텍처의 간단한 블록도이다.

[28] 도 9b는 도 9a의 아키텍처에서 이용할 수 있는 다양한 실시예에 따르는 물품의 블록도이다.

[29] 도 9c는 다양한 실시예에 따르는 카트리지 기반 피부 미용기의 간단한 단면도로, 바늘은 집어넣어져 있다.

[30] 도 9d는 다양한 실시예에 따르는 카트리지 기반 피부 미용기의 간단한 단면도로, 바늘은 전개되어 있다.

[31] 도 10a 내지 10d는 다양한 실시예에 따르는 피부 미용기에 대한 여러 부착 단계를 보이는 카트리지의 간단한 부분 단면도이다.

[32] 도 10e는 다양한 실시예에 따르는 피부 미용기의 간단한 부분 단면도로, 바늘은 전개되어 있다.

[33] 도 10f는 다양한 실시예에 따르는 카트리지 기반 피부 미용기의 카트리지 인터페이스의 간단한 단면도이다.

[34] 도 11a는 다양한 실시예에 따르는 전개된 바늘을 갖는 핸들에 결합된 피부 미용기 카트리지의 간단한 부분 단면도이다.

[35] 도 11b는 다양한 실시예에 따르는 카트리지 바늘 조립체의 간단한 단면도이다.

[36] 도 11c는 다양한 실시예에 따르는 카트리지 바늘 조립체의 간단한 분해 단면도이다.

[37] 도 12는 다양한 실시예에 따르는 피부 미용시스템의 시술 알고리즘을 보이는 흐름도이다.

발명의 실시를 위한 최선의 형태

[38] 도 1a는 다양한 실시예에 따르는 피부 미용기(10)의 간단한 사시도이고, 도 1b는 간단한 측면도이다. 미용기(10)는 침술판(acupuncture plate)(200)에 결합된 사용자 손잡이(220)를 구비할 수 있다. 일실시예에서, 침술판(200)은 탄성부(210)를 통해서 손잡이부(222)에 탄성적으로 결합할 수 있다. 탄성부는 탄성재와 비탄성재의 조합으로 구성할 수 있다. 탄성재는 플라스틱, (합성 또는 천연)고무, 및 스프링을 포함할 수 있다.

[39] 도 1c는 다양한 실시예에 따르는 침술판(200)의 실시예를 보이는 간단한 분해 사시도이다. 침술판(200)은 실질적으로 단단한 상면부 또는 층(290)과, 변형가능하거나 탄성적인 탄성부 또는 층(270)과, 침술부 또는 층(250)을 구비할 수 있다. 침술부(250)는 다수의 침술핀 또는 바늘(230)을 구비할 수 있다. 도 1d는 핀 또는 바늘(230)용 홀(212)이나 배치를 보이는 침술판(200)의 침술판(200)의 간단한 저면도이다. 일실시예에서, 침술판(200)은 약 1 내지 4㎝의 폭과 약 1 내지 6㎝ 길이의 치수를 갖는 사각형 단면을 가질 수 있다. 침술판(200)은 원형, 타원형, 다각형을 포함하여, 임의의 형상을 가질 수 있으며, 또는 시술할 피부 영역에 맞게 형상을 특정화할 수 있다.

[40] 일실시예에서, 침술판은 균일하게 이격된 약 140개의 핀 또는 바늘(230)을 구비할 수 있다. 각 바늘은 약 0.1 내지 0.4㎜의 직경과 0.2 내지 1.4㎜의 길이를 가질 수 있으며, 일실시예에서는 0.3㎜의 직경과 0.8㎜의 길이를 갖는다. 탄성부 또는 층(270)은 탄성재 또는 비탄성재의 조합으로 구성할 수 있다. 탄성재는 플라스틱, (합성 또는 천연)고무, 및 스프링을 포함할 수 있다. 침술부(250)는 접착제, 나사, 용접 또는 기타 연결수단을 통해서 탄성부(270)를 개재하여 상면부(290)에 직접 또는 간접으로 결합할 수 있다. 일실시예에서, 침술부(250)는 엘라스토머를 구비하여 침술핀(230)에 대한 침술부(250)의 적어도 부분적인 변형을 가능케할 수 있다.

[41] 시술시에, 사용자는 미용기(10)를 이용하여 환자(20)의 피부나 상피의 피부층에 다수의 미세상처나 홀을 만들 수 있다. 미세상처나 홀을 통해서 미세상처 또는 홀 위나 주변에 도포된 한가지 이상의 약품에 대한 흡수나 도포를 향상시킬 수 있다.

[42] 도 2a는 다양한 실시예에 따르는 피부 미용시스템(310)의 간단한 도면이다. 이

시스템(310)은 피부 미용기(320)와 전기신호 발생 시스템(300)을 구비한다. 전기신호 발생 시스템(300)은 하나 이상의 전선(300A)을 통해서 피부 미용기(320)에, 그리고 하나 이상의 전선(300B)을 통해서 시술할 환자(20)에 전기적으로 연결될 수 있다. 도 2b는 다양한 실시예에 따르는 피부 미용기(320)의 간단한 단면도이다. 피부 미용기(320)는 손잡이(330), 탄성부(333), 전기 입력부(340), 내부전선(331) 및 침술판(350)을 구비할 수 있다. 침술핀(351)은 임의의 길이(A)(일실시예에서 0.3㎜ 내지 2.1㎜)를 가질 수 있는데, 하나 이상의 침술핀(351)은 내부전선(331)을 통해서 전기 입력부(340)에 전기적으로 연결된다. 전기 입력부(340)는 전선(300A)를 통해서 신호 발생 시스템(300)에 분리 가능하게 연결될 수 있다.

[43] 전기신호 발생 시스템(300)은 (도 5a 내지 6에 도시한 바와 같은) 다양한 신호를 발생하여 내부전선(331) 및 전선(300A)을 통해서 시스템(300)에 전기적으로 연결된 하나 이상의 침술핀(351)을 진동시킬 수 있다. 핀(351)의 진동으로 핀(351)에 의해서 피부에 형성된 미세상처나 절개부를 증가시킬 수 있다. 도 2c는 다양한 실시예에 따르는 피부 미용기(360)의 간단한 단면도이다. 이 미용기(360)는 손잡이(330), 탄성부(333), 전도성 접지부(390), 내부 전선(331), 신호 발생기(370), 스위치(375), 및 침술판(350)을 구비할 수 있다. 신호 발생기(370)는 내부전선(331)을 통해서 하나 이상의 핀(351)에 연결될 수 있고 전도성 접지부(390)에도 연결될 수 있다.

[44] 신호 발생기 또는 모듈(370)은 (도 5a 내지 6에 도시한 바와 같은) 다양한 신호를 발생하여 내부전선(331) 및 전도성 접지부(390)를 통해서 전기신호 발생 시스템(300)에 전기적으로 연결된 하나 이상의 핀(351)을 진동시킬 수 있다. 시술시에, 사용자(20)는 전도성 접지부(390)를 잡고서 전기적으로 연결된 하나 이상의 핀(351)을 의 피부와 접촉하도록 배치하여, 핀(351)으로부터 전도성 접지부(390)까지의 전기적인 경로를 형성할 수 있다. 신호 발생기(370)는 전원을 공급하여 하나 이상의 전기신호를 발생시키는 밧데리를 구비할 수 있다. 신호 발생기(370)에 연결된 스위치(375)에 의해 신호 발생기(370)는 소정 시간 주기 동안 또는 스위치(375)가 다시 꺼질 때까지 하나 이상의 전기 신호를 발생할 수 있다. 상술한 바와 같이, 핀(351)의 진동으로 핀(351)에 의해 피부에 형성된 미세상처나 절개부를 증가시킬 수 있다.

[45] 도 2d는 다양한 실시예에 따르는 피부 미용기(362)의 간단한 단면도이다. 이 미용기(362)는 손잡이(330), 탄성부(333), 내부 전선(331, 332), 신호 발생기(370), 스위치(375), 및 침술판(350)을 구비할 수 있다. 신호 발생기(370)는 내부전선(331)을 통해서 하나 이상의 핀(351)에 연결될 수 있고 내부전선(332)을 통해서 하나 이상의 다른 핀(352)에도 연결될 수 있다. 작동시에 핀(351, 352)은 하나 이상의 다이폴 쌍(bipole pair)을 형성할 수 있다. 신호 발생기 또는 모듈(370)은 (도 5a 내지 6에 도시한 바와 같은) 다양한 신호를 발생하여 하나 이상의 다이폴 쌍이나 바이폴라(bipolar) 핀(351, 352)을 진동시킬 수 있다.

[46] 도 2f는 다양한 실시예에 따라 전기적으로 연결된 하나 이상의 핀(351)을 구비하는 침술판(350)의 간단한 분해 사시도이다. 침술판(350)은 실질적으로 단단한 상면부 또는 층(357)과, 변형가능하거나 탄성적인 탄성부 또는 층(355)과, 침술부 또는 층(353)을 구비할 수 있다. 침술부(353)는 다수의 침술핀 또는 바늘(351)을 구비할 수 있고, 이중 하나 이상의 핀(351)은 전선(331)에 전기적으로 연결된다. 바이폴라 구성에서, 제 2전선(332)은 하나 이상의 다른 핀(351)에 연결될 수 있다. 도 2e는 침술핀 또는 바늘(359, 357)을 보이는 침술판(350)의 간단한 저면도로, 핀은 제 1전선(331)과 제 2전선(332)에 전기적으로 연결되어 다이폴 쌍(바이폴라 핀)을 형성할 수 있다.

[47] 일실시예에서, 침술판(350)은 약 1 내지 4㎝의 폭과 약 1 내지 6㎝ 길이의 치수를 갖는 사각형 단면을 가질 수 있다. 침술판(350)은 원형, 타원형, 다각형을 포함하여, 임의의 형상을 가질 수 있으며, 시술할 피부 영역에 맞게 형상을 특정화할 수 있다.

[48] 일실시예에서, 침술판은 균일하게 이격된 약 140개의 핀 또는 바늘(351)을 구비할 수 있다. 각 바늘은 약 0.1 내지 0.4㎜의 직경과 0.2 내지 1.4㎜의 길이를 가질 수 있으며, 일실시예에서는 0.3㎜의 직경과 0.8㎜의 길이를 갖는다. 탄성부 또는 층(355)은 탄성재 또는 비탄성재의 조합으로 구성할 수 있다. 탄성재는 플라스틱, (합성 또는 천연)고무, 및 스프링을 포함할 수 있다. 침술부(353)는 접착제, 나사, 용접 또는 기타 연결을 통해서 탄성부(355)를 개재하여 상면부(357)에 직접 또는 간접으로 결합할 수 있다. 일실시예에서, 침술부(353)는 엘라스토머를 구비하여 침술핀(351)에 대한 침술부(353)의 적어도 부분적인 변형을 가능케할 수 있다.

[49] 도 3a 및 도 3b는 내부전선(458)을 통해서 전기신호 발생기에 연결될 수 있는 하나 이상의 핀(451)을 구비하는 피부 미용기(400, 460)의 간단한 사시도이다. 각 미용기(400, 460)는 침술핀(351)과 유사할 수 있는 다수의 침술핀(451)을 갖는 둥근 롤러(450)를 구비한다. 미용기(400)에서, 전기 리드선(300A)은 미용기 손잡이(430) 내의 전기 입력부(410)에 연결될 수 있으며, 이 입력부(410)는 내부전선(458)에 전기적으로 연결된다. 미용기(460)에서, 손잡이(430)는 신호 발생기(370)와 유사한 신호 발생기(470), 스위치(475), 및 전도면(490)을 구비할 수 있다. 미용기(460, 400)의 회전 능력을 제외하면, 시술시에 미용기(460)는 미용기(360)와 유사하게 작동할 수 있다. 일실시예에서, 롤러(450)는 시술할 피부 영역에 맞게 다양한 형상을 가질 수 있다.

[50] 상술한 미용기(10, 320, 360, 362, 400, 460)중 어느 하나에서, 침술판 또는 롤러(200, 350, 450)는 도 4a에 도시한 바와 같이, 다수의 내장형 LED(32A, 32B), 밧데리(52), 컨트롤러(54), 및 안테나(56)를 구비할 수 있다. 일실시예에서, LED(32A)는 제 1특정 주파수 범위의 에너지를 방출하도록 구성할 수 있고, LED(32B)는 제 2특정 주파수 범위의 에너지를 방출하도록 구성할 수 있다. 롤러(450), 침술판(200, 350)의 표면(22)은 피부 세포의 시술에 사용할 수 있는

약품(22A)을 내포할 수 있다. 약품(22A)은 제 1 및 제 2주파수 범위에서 반응할 수 있다. 또한 피부 세포는 제 1 및 제 2주파수 범위에서 반응할 수 있다. 그리고, 약품(22A)의 조합과, 약품(22A) 및 피부 세포에 제 1 및 제 2주파수 범위를 적용하는 것은 상승효과를 가질 수 있다.

[51] 일실시예에서, 약품(22A)은 시술할 피부에 직접 도포할 수 있다. 다른 실시예에서, 약품(22A)은 미용기(10, 320, 360, 362, 400, 460)에서 추가로 이용하지 않을 수도 있다. 일실시예에서, 침술부(250, 353)는 반투명일 수 있고, 폴리우레탄, 의료용 실리콘, 또는 기타 유연한 반투명 저자극성 물질일 수 있다.

[52] 일실시예에서, 국소(local) 컨트롤러(54) 및 밧데리(52)를 상면부(290, 357), 침술부(250, 353), 또는 손잡이(220, 330)에 또는 이들 부재 사이에 별도로 내장할 수 있다. 컨트롤러(54)는 하나 이상의 LED(32A)에 전기적으로 연결할 수 있다. 컨트롤러(54)는 밧데리(52)에 연결할 수도 있다. 컨트롤러(54)는 사용자 스위치(75, 56)에 따라서 LED(32A, 32B)에 대해 하나 이상의 신호를 발생할 수 있다. 이 신호는 제 1 및 제 2주파수 범위에 따라서 변할 수 있다. 컨트롤러(54)는 LED(32A, 32B)에 대한 에너지 공급을 소정 시간 간격으로 제한할 수 있는 하나 이상의 타이머(58)를 구비할 수 있다. 일실시예에서, 컨트롤러는 안테나(56)에 연결되어 하나 이상의 LED(32A, 32B)에 대한 에너지 전송과 관련된 하나 이상의 신호를 수신 및 송신할 수 있다. 일실시예에 있어서, 미용기(10)는 안면과 같이, 피부 세포의 특정 부위를 시술하도록 구성할 수 있다. 미용기(10)는 방사광이 피부 세포 위에 초점을 맺을 수 있게 사용자의 신체구조에 맞도록 구성할 수 있다. 다른 실시예에서, 미용기(200)는 팔, 다리, 가슴, 손, 발, 목, 또는 기타 부위 상의 피부 세포를 포함하여 다른 신체 부위를 시술하도록 구성할 수 있다.

[53] 도 4b에 도시한 실시예(510)에 있어서, 컨트롤러(54), 안테나(104), 및 전원(60)은 미용기(10, 320, 360)의 외부에 배치할 수 있다. 전원(60)은 컨트롤러(54)에 연결할 수 있다. 컨트롤러(54)는 하나 이상의 전선(106)을 통해서 하나 이상의 LED(32A, 32B)에 연결할 수도 있다. 컨트롤러(54)는 사용자 스위치(56)에 따라서 LED(32A, 32B)에 대해 하나 이상의 신호를 발생할 수 있다. 이 신호는 제 1 및 제 2주파수 범위에 따라서 변할 수 있다. 컨트롤러(54)는 LED(32A, 32B)에 대한 에너지 공급을 소정 시간 간격으로 제한할 수 있는 하나 이상의 타이머(58)를 구비할 수 있다. 일실시예에서, 컨트롤러는 안테나(104)에 연결되어 하나 이상의 LED(32A, 32B)에 대한 에너지 전송과 관련된 하나 이상의 신호를 수신 및 송신할 수 있다.

[54] 상술한 미용기(10, 320, 360, 362, 400, 460) 중 어느 하나에서, 침술판(200, 350) 또는 롤러(450)는 다수의 내장형 LED 렌즈(536), 광섬유 경로(534), 및 LED(32)를 구비할 수 있다. 이 실시예에서, LED(532)는 광섬유 경로(534)를 통해서 렌즈(536)에 연결할 수 있다. 컨트롤러(540)는 렌즈(536)와 광섬유 경로(534)를 통해서 피부세포에 전달되는 LED신호를 LED(532)를 통해서 발생할 수 있다.

[55] 도 5a와 5b는 전기 신호 파형(650, 630, 640)을 보이는 도면으로, 다양한

실시예에 따라서 이들 파형을 하나 이상의 LED(32A, 32B, 532) 및 핀(230, 351, 451)에 가할 수 있다. 신호 파형(650)은 다수의 구형파(square-wave) 펄스(652, 654, 656)를 구비할 수 있으며, 이들 펄스를 LED(32A, 32B, 532)에 가할 수 있다. 각 펄스(652, 654, 656)는 유사한 크기 및 포락선(envelope)을 갖는다. 파형(650)은 소정 간격(T1) 동안 주기적으로(P1) LED(32A, 32B, 532) 및 핀(230, 351, 451)에 전원을 인가하는데 사용할 수 있으며, 각 펄스(652, 654, 656)는 진폭(A1)을 갖는다. 일실시예에서, 액체 내에 정전용량(capacitance)을 생성하는데 필요한 에너지에 따라서, 진폭(A1)은 약 0.1밀리암페어(㎃) 내지 10㎃이고, 펄스폭(T1)은 약 100마이크로초(㎲) 내지 500㎲이며, 주기(P1)는 100㎳ 내지 500㎳일 수 있다. 다른 실시예에서, LED를 구동하거나 하나 이상의 핀(230, 351, 451)을 진동시키기 위한 에너지에 따라서, 진폭(A1)은 약 0.5밀리암페어(㎃) 내지 5㎃이고, 펄스폭(T1)은 약 200마이크로초(㎲)이며, 주기(P1)는 250㎳일 수 있다.

[56] 도 5b에서, 신호 파형(630)을 제 1 LED(32A, 32B, 532) 모듈이나 그룹 및 핀(230, 351, 451)에 가할 수 있고, 제 2 LED(32A, 32B, 532) 모듈 및 핀(230, 351, 451, 352)에 전원을 인가하기 위해 제 2파형(640)을 가하거나 사용할 수 있다. 신호 파형(630)은 다수의 구형파 펄스(632, 634, 636)를 포함하고, 신호 파형(640)은 다수의 구형파 펄스(642, 644, 646)를 포함한다. 각 펄스(632, 634, 636, 642, 644, 646)는 유사한 크기 및 포락선을 갖는다. 파형(630)은 소정 간격(T1) 동안 주기적으로(P1) 제 1 LED(32A, 32B, 532) 및 핀(230, 351, 451)에 전원을 인가하는데 사용할 수 있으며, 각 펄스(632, 634, 636)는 진폭(A1)을 갖는다. 파형(640)은 소정 간격(T2) 동안 주기적으로(P2) 제 2 LED(32A, 32B, 332) 모듈 및 핀(230, 351, 451)에 전원을 인가하는데 사용할 수 있으며, 각 펄스(642, 644, 646)는 진폭(B1)을 갖는다. 피부 세포 또는 약품(22A)에 영향을 주는 에너지에 따라서, 펄스폭(T1, T2)은 약 100마이크로초(㎲) 내지 500㎲이며, 주기(P1, P2)는 100㎳ 내지 500㎳일 수 있다. 다른 실시예에서, 피부 세포 또는 약품(22A)에 영향을 주는 에너지에 따라서, 진폭(A1, A2)은 약 0.5밀리암페어(㎃) 내지 5㎃이고, 펄스폭(T1, T2)은 약 200마이크로초(㎲)이며, 주기(P1, P2)는 약 250㎳일 수 있다. 다른 실시예에서, 펄스(632, 634, 636)는 펄스(642, 644, 646)과 실질적으로 중첩되지 않는다. 다른 실시예에서, T1>T2이고, P2는 P1의 정수배(integer multiple)이다.

[57] 도 6은 다중 펄스(672, 674, 676, 678, 682, 684)를 포함하는 파형(670)을 나타내는 것으로, 이들 펄스는 시간 또는 주파수 영역에서 중첩되지 않을 수 있다. 일실시예에서, 각 펄스(672, 674, 676, 678, 682, 684)는 펄스폭(T3), 주파수 스펙트럼 폭(F1) 및 주기(P3)를 가질 수 있다. 펄스(672)는 펄스(674)로부터의 주파수 옵셋(frequency offset)이고, 펄스(676)는 펄스(678)로부터의 주파수 옵셋이며, 펄스(682)는 펄스(684)로부터의 주파수 옵셋이다. 펄스(672, 674, 676, 678, 682, 684)를 LED 모듈에 가해서 피부 세포나 약품(22A) 및 핀(230, 351, 451)에 영향을 줄 수 있다. 상이한 주파수 스펙트럼을 갖는 펄스(672, 674)를

상이한 LED에 가해 자극할 수 있다. 일실시예에서, 펄스(672, 676, 682)를 제 1 LED 모듈에 가할 수 있고, 펄스(674, 678, 684)를 제 2 LED 모듈에 가할 수 있다. 각 펄스 간의 주파수 분리는 제 1 및 제 2 LED 모듈과 핀(230, 351, 451)에 대한 동시 에너지 공급 및 이어지는 독립 스펙트럼을 발생할 수 있다.

[58] 일실시예에서, 본 발명은 피부 세포에 대고 시술하기 위해 도 7a에 도시한 알고리즘(740)을 이용할 수 있다. 사용자, 임상의, 또는 장비요원은 하나 이상의 핀(230, 351, 451)이 세포 내에 충분히 삽입되도록 확고히 세포에 대고 미용기를 가압하면서, 시술할 피부 세포 위에 미용기(10, 320, 360, 362, 400, 460)를 배치한다(활동단계 741). 도 5a, 5b, 6에 도시한 바와 같은 제 1신호를 소정 시간 주기 동안(활동단계 744) 제 1 LED 모듈 또는 그룹(32A) 및 피부 미용기(10, 320, 360, 362, 400, 460)의 핀(230, 351, 451)에 가할 수 있다(활동단계 742). 도 5a, 5b, 6에 도시한 바와 같은 제 2신호를 소정 시간 주기 동안(활동단계 748) 제 2 LED 모듈 또는 그룹(32B) 및 피부 미용기(10, 320, 360, 362, 400, 460)의 핀(230, 351, 451)에 가할 수 있다(활동단계 746). 그룹에 가한 이들 신호는 피부 세포 또는 약품(22A)을 자극하거나 하나 이상의 핀(230, 351, 451)에 진동을 유발하도록 선택할 수 있다.

[59] 다른 실시예에서, 본 발명은 피부 세포에 대고 시술하기 위해 도 7b에 도시한 알고리즘(750)을 이용할 수 있다. 사용자, 임상의, 또는 장비요원은 미용기(10, 320, 360, 362, 400, 460) 위나 시술할 피부 세포 위에 감광성 약품(light sensitive chemical)을 도포한다(활동단계 751). 사용자, 임상의, 또는 장비요원은 치료할 피부 세포 위에 피부 미용기(10, 320, 360, 362, 400, 460)를 배치한다. (활동단계 752). 도 5a, 5b, 6에 도시한 바와 같은 신호를 소정 시간 주기 동안(활동단계 756) LED 모듈 또는 그룹(32A 또는 32B) 및 핀(230, 351, 451)에 가할 수 있다(활동단계 754).

[60] 다른 실시예에서, 본 발명은 피부 세포에 대고 시술하기 위해 도 7c에 도시한 알고리즘(760)을 이용할 수 있다. 사용자, 임상의, 또는 장비요원은 미용기(10, 320, 360, 362, 400, 460) 위나 시술할 피부 세포 위에 감광성 약품을 도포한다(활동단계 761). 사용자, 임상의, 또는 장비요원은 치료할 피부 세포 위에 피부 미용기(10, 320, 360, 362, 400, 460)를 배치한다(활동단계 762). 도 5a, 5b, 6에 도시한 바와 같은 제 1신호를 소정 시간 주기 동안(활동단계 764) 제 1 LED 모듈 또는 그룹(32A) 및 피부 미용기(10, 320, 360, 362, 400, 460)의 핀(230, 351, 451)에 가할 수 있다(활동단계 763). 도 5a, 5b, 6에 도시한 바와 같은 제 2신호를 소정 시간 주기 동안(활동단계 768) 제 2 LED 모듈 또는 그룹(32B) 및 피부 미용기(10, 320, 360, 362, 400, 460)의 핀(230, 351, 451)에 가할 수 있다(활동단계 766).

[61] 피부 미용기(10, 320, 360, 362, 400, 460)는 사용한 물질이 보다 효과적으로 전달, 흡수 및 기능하도록 돕기 위해, 피부 또는 피부 아래 조직의 상피 세포의 치료 및 치유를 위한 특정 주파수 광의 추가와 함께, 피부 등의 피부 세포 위에서

직접 화장품, 약물 또는 기타 약품을 활용하는데 사용할 수 있다. LED(32A, 32B)는 특정 주파수의 광을 생성한다. 광의 적용으로 피부 미용기(10, 320, 360, 362, 400, 460)는 도포한 물질의 탈수를 방지하면서 보다 장기간 동안 화장품, 약물 또는 기타 약품이 피부 세포 상에 유지될 수 있게 한다. 그러한 광의 적용으로 선택한 파장 또는 주파수에 따라서 화장품, 약물 또는 기타 약품의 효능을 향상시킬 수 있다.

[62] 또한, 피부 미용시스템의 적용으로 세포 활성을 증가시키고 조직이 보다 빨리 치유되도록 도와주며 세포 내에서 사용한 화장품, 약물 또는 약품(23A)의 전달, 흡수 및 소비를 촉진시킬 수 있다. 특정 주파수의 LED 광은 섬유아세포 생산 및 콜라겐뿐만 아니라, 기능, 시술 시간의 감소, 및 치유 촉진을 위해서, 세포 에너지에 대한 ATP의 생성을 촉진하도록 세포기관 및 미토콘트리아를 자극하는 것을 포함하여, 세포의 기타 활동을 증가시킬 수 있다. 피부 미용기(10, 320, 360, 362, 400, 460)에 의해서 신체에 사용한 물질은 보다 효능이 있고 세포 수준에서 신체에 유용하게 된다.

[63] 피부 미용기(10, 320, 360, 362, 400, 460)는 특히 내부의 감색성 약품(발색단, 시토크롬계)을 활성화시키기 위해 근적외광을 사용할 경우, 각 세포의 미토콘트리아(에너지 구획) 내에서 기본적인 에너지 프로세스를 촉진할 수 있다. 그러나, 이들 스펙트럼은 UV로만 한정되지 않으며, 기타 가시 스펙트럼 및 IR 스펙트럼도 이용할 수 있다. 일실시예에서, 피부 손질을 위한 최적의 광 LED 파장은 IR 880㎚에 대해 640, 680, 730 나노미터(㎚) 파장을 포함할 수 있다. 또한, 피부 미용기(10, 320, 360, 362, 400, 460)를 통한 400㎚ 내지 490㎚의 청색광의 적용으로 피부 세포 내부 및 외부에서 박테리아나 균류의 성장을 억제하고 이를 사멸시킬 수 있다. 신체의 세포 및 조직 상에서 그들의 효과를 증가시키기 위해 LED나 기타 활성 광선의 사용과 함께, 화장품, 약물 또는 기타 활성제를 피부 위에 직접 도포하고 장기간 그들을 유지하는데 피부 미용기(10, 320, 360, 362, 400, 460)를 이용할 수 있다. 피부 미용기(10, 320, 360, 362, 400, 460)는 휴대성이 높으며 시술 동안에 사용자가 휴대하는 것이 가능하다.

[64] 약품(22A)은 AHA's(알파 히드록시산), 천연 오일, 알로에 베라 혼합물, 콜라겐 촉진제, bt, 키토산, 대세(daeses), 엔돌핀, (광민감제(photofrin) 또는 ALA) 같은 광역학 약품(photodynamic drugs(PDT)), 비타민 A, C, E 또는 기타, 코지산, 레티놀 또는 기타 엑스톨리언트(exfoliant), 살리신산, 항산화제 또는 기타 혈류 촉진제(youth boosters) 및 노화방지 화장품 또는 약물, 소독약, 항생제, 항암제, 방향 치료제, 과일 및 야채 추출물, 항염증제, 진통제, 호르몬, 제모제 등을 구비하는 화장품, 약물 또는 기타 활성제를 포함할 수 있다. 그러나, 본 발명은 이들로만 제한되는 것은 아니며, 피부 또는 기타 조직에 대해 유용한 어떤 약물, 허브 배합제 또는 활성 혼합물을 포함할 수 있다.

[65] 도 8은 다양한 실시예에 따르는 미용시스템(780)의 블록도이다. 도 8에 도시한 시스템(780)은 다양한 실시예에서 피부 미용기(10, 320, 360, 362, 400, 460)로서

사용할 수 있다. 이 시스템(780)은 개인 데이터 단말(personal data assistant), 휴대전화, 랩톱 컴퓨터, 또는 데스크탑 컴퓨터를 포함하는 컴퓨터 디바이스일 수 있다. 시스템(780)은 중앙 처리장치(CPU)(782), 랜덤 억세스 메모리(RAM)(784), 읽기전용 메모리(ROM)(806), 디스플레이(788), 사용자 입력장치(812), 트랜시버 특수용도용 집적회로(application specific integrated circuit, ASIC)(816), 디지털 아날로그(D/A) 및 아날로그 디지털(A/D) 변환기(815), 마이크로폰(808), 스피커(802), 및 안테나(804)를 구비할 수 있다. CPU(782)는 OS 모듈(814) 및 어플리케이션 모듈(813)을 구비할 수 있다. RAM(784)은 스위치 및 타이머(58)를 구비할 수 있다.

[66] ROM(806)은 CPU(782)에 연결되어 있으며, CPU(782)에 의해 실행될 프로그램 명령을 저장할 수 있다. RAM(784)은 CPU(782)에 연결되어 있으며, 임시 프로그램 데이터, 오버헤드 정보, 및 큐(queues)(798)를 저장할 수 있다. 사용자 입력장치(812)는 키보드, 터치 패드 스크린, 트랙 볼 또는, 사용자가 시스템(780) 작동을 위해서 메뉴를 통해 처리할 수 있는 기타 유사한 입력장치 등을 포함할 수 있다. 디스플레이(788)는 CRT, LCD, LED 또는, 사용자 감지가능한 신호를 사용자가 읽거나, 보거나, 들을 수 있는 발광 장치일 수 있다.

[67] 마이크로폰(808) 및 스피커(802)는 시스템(780) 내에 포함시킬 수 있다. 또한, 마이크로폰(808) 및 스피커(802)는 시스템(780)과 분리시킬 수도 있다. 수신 데이터는 버스(796)를 통해 CPU(782)로 전달될 수 있으며, 이때 데이터는 LED(32A, 32B, 332) 또는 광 모듈이나 와이어(331, 458)에 대한 신호를 포함할 수 있다. 트랜시버 ASIC(816)는 데이터, 스크린 또는 신호를 통신하는데 필요한 명령 세트를 포함할 수 있다. 트랜시버 ASIC(816)는 안테나(804)에 연결되어 무선 메시지, 페이지, 및 신호 내의 신호 정보와 통신할 수 있다. 트랜시버 ASIC(816)가 메시지를 수신하면, 직렬 버스(796)를 통해서 이것의 상응하는 데이터가 CPU(782)로 전달될 수 있다. 데이터는 본원에 기술한 방법에 따라서 시스템(780)에 의해 처리될 무선 프로토콜, 오버헤드 정보, 및 데이터를 포함할 수 있다.

[68] D/A 및 A/D 변환기(815)는 하나 이상의 광 모듈에 연결되어 하나 이상의 광 모듈에 전원을 인가하는데 사용될 신호를 발생할 수 있다. D/A 및 A/D 변환기(815)는 LED(32A, 32B) 및 핀(230, 351, 451) 같은 하나 이상의 디바이스에 연결할 수 있다. 상술한 콤포넌트 중 어떤 것은 소프트웨어의 실시예를 포함하여, 다수의 방법으로 실현할 수 있다. 상술한 콤포넌트 중 어떤 것은 소프트웨어의 실시예를 포함하여, 다수의 방법으로 실현할 수 있다. 따라서, LED(32A, 32B), 핀(230, 351, 451), 컨트롤러(54), 스위치(56), 타이머(58), 컨트롤러(320)는 모두 본원에서 "모듈"로서 특징화할 수 있다. 미용기(10, 320, 360, 400)의 구성에서 필요로 하는 바와 같이, 그리고 다양한 실시예의 특정 실현을 위해 적절한 바와 같이, 모듈은 하드웨어 회로, 단일 또는 다중 프로세서 회로, 메모리 회로, 소프트웨어 프로그램 모듈 및 오브젝트, 펌웨어, 및 그들의

조합을 구비할 수 있다.

[69] 도 9a는 다양한 실시예에 따르는 피부 미용 아키텍처(dermalogical treatment architecture, DTA)(900)의 간단한 블록도이다. 도 9a에 도시한 바와 같이, 아키텍처(900)는 신호 발생 및 제어 모듈(signal generation and control(SGC) module), 손잡이 모듈(920), 및 액추에이터 모듈(930)을 구비한다. 일실시예에서, 손잡이 모듈(920)은 전개형 바늘 모듈(924)과 모터 및 LED 모듈(922)을 구비할 수 있다. 일실시예에서, 전개형 바늘 모듈(924)은 모터 및 LED 모듈(922)에 분리가능하게 결합될 수 있다. 다른 실시예에서, 전개형 바늘 모듈(924)은 각각 환자, 피시술자, 또는 사용자용으로 1회 이상의 시술 후에 제거하여 폐기하는 1회용 카트리지 모듈(924)일 수 있다.

[70] SGC(910)는 하나 이상의 디스플레이(912A), 사용자 입력장치(912B), 손잡이 모듈 접속부(914A), 및 액추에이터 모듈 접속부(914C), 전기 에너지 저장 모듈(913), 및 하나 이상의 휠(916A, 916B)을 구비할 수 있다. 일실시예에서, SGC(910)는 이동가능하며, 휠(916A, 916B)은 사용자가 원하는 곳에 일단 위치시키면, SGC(910)의 의도하지 않은 이동을 막기 위해 록킹시킬 수 있다. 다른 실시예에서, SGC(910)는 교류(AC) 그리드 전원을 포함하는 외부 전원에 연결할 수도 있다.

[71] 일실시예에서, 디스플레이(912A)는 SGC(910)에 결합될 또는 결합된 손잡이 모듈(920)에 대한 조작 파라미터를 표시할 수 있다. 디스플레이(912A)는 터치 센서방식일 수 있으며, 사용자는 하나 이상의 조작 파라미터를 설정할 수 있다. 일실시예에서, 조작 파라미터는 손잡이 모듈(920)에 인가되는 전기 에너지의 신호 강도, 그러한 에너지의 인가 시간, 바늘 전개 시간과 깊이, LED의 강도와 시간, 및 액추에이터(930)를 통해 각 작동을 위해 실행될 주기(cycles) 또는 발사(shots) 수를 포함할 수 있다. 일실시예에서, 액추에이터(930)는 SGC(910)에 내장되거나 케이블(914D) 및 SGC(910) 액추에이터 모듈 접속부(914C)를 통해 SGC(910)에 유선으로 접속되거나 무선으로 통신하는 별도의 디바이스일 수 있다.

[72] 일실시예에서, 액추에이터(930)는 족동식 액추에이터 또는 수동식 액추에이터를 포함하는 기계식 장치일 수 있다. 또한, 액추에이터(930)는 ASIC를 갖거나 도 8에 도시한 모듈(780) 등의 장치(가령 컴퓨터, 랩톱, PDA, 휴대전화, 또는 기타 전자 장치) 상에서 어플리케이션을 구동하는 전자 장치일 수 있다. 일실시예에서, 어플리케이션은 사용자로 하여금 SGC(910)의 임의의 가능한 조작 파라미터를 설정하거나 제어할 수 있도록 할 수 있으며, SGC(910)에 연결된 기구(920)의 작동을 개시할 수 있다. 도 9b는 다양한 실시예에 따라 SGC(910)에서 이용할 수 있는 CPU 모듈(911)의 블록도이다.

[73] CPU 모듈(911)은 무선주파수 신호발생기(radio frequency signal generator, RFSG) 모듈(911A), 바늘 전개 모터 컨트롤러(needle deployment motor controler, NDMC) 모듈(911B), 광신호 발생기(photonic signal generator, PSG) 모듈(911C)을

구비할 수 있다. 일실시예에서, 광신호 발생기 모듈(911C)은 LED 신호 발생기 또는 컨트롤러 모듈(911C)일 수 있다. 일실시예에서, 손잡이 모듈(920)은 PSG(911C)가 광 모듈(922I)로 하여금 원하는 강도를 갖는 하나 이상의 주파수를 생성하도록 하는 제어 신호 또는 에너지 신호를 발생할 수 있는 하나 이상의 광 발생기 또는 모듈(도 10a, 10b에서 922I)을 포함할 수 있다.

[74] NDMC(911B)는 사용자가 선택한 하나 이상의 조작 파리미터에 기반한 전개형 바늘 모듈(도 9c의 924)의 하나 이상의 바늘(924A)에 대한 전개를 제어할 수 있다. 파라미터는 일실시예에서 바늘(924A)의 전개와 관련된 깊이와 듀티 주기를 결정할 수 있다. 바늘의 전개를 제어하기 위해 NDMC(911B)에 의해 발생된 신호는 하나 이상의 바늘(924A)을 구동하기 위해 사용한 모터(도 9c의 922A)에 따라서 가변될 수 있다. 상술한 바와 같이, 바늘(924A)에 전기 신호를 인가하여 바늘의 진동을 일으키거나 바늘(924A)이 전개되는 조직의 절개 및 응고를 가능케 할 수 있다. RFSC(911A)는 선택한 조작 파라미터에 기반하여 하나 이상의 바늘(924A)에 인가될 하나 이상의 전기 신호를 발생할 수 있다. 전기 신호는 일실시예에서, 하나의 바늘(924A), 그룹 바늘(924A)(단극 구성) 또는 한쌍의 바늘(924A)(쌍극 구성)에 인가될 수 있다. 일실시예에서, RFSG(911A)는 도 5a, 5b, 및 6에 도시한 신호(650, 630, 640, 970)나 그의 조합, 또는 기타 신호를 인가할 수 있다.

[75] 일실시예에서, CPU 모듈(911)은 RFSG(911A), NDMC(911B), 및 PSG(911C)를 통해서 광학, 전기, 및 기계(바늘 전개) 치료의 다양한 조합을 포함하여 다양한 치료 해법을 생성할 수 있다. 추가의 실시예에서, CPU 모듈(911)은 하나 이상의 모터(922A)를 통해 특정 모듈(922I), 개별 또는 그룹 바늘(924A)의 전개를 위한 광 에너지의 발생을 제어할 수 있고, 개별 또는 그룹 바늘(924A)에 인가되는 전기 신호를 제어할 수 있다. 따라서, DTA(900)는 사용자의 선택에 기반한 다양한 치료법을 디스플레이(912A), 사용자 입력장치(912B), 및 액추에이터(930)를 통해 제공할 수 있다. CPU(911)는 DTA(900)의 동작을 제어하기 위해 알고리즘(도 12의 930) 또는 그의 변형들(variations)을 이용할 수 있다.

[76] 도 9c는 다양한 실시예에 따르는 카트리지 기반 피부 미용기 또는 손잡이 모듈(920)의 간단한 단면도로, 하나 이상의 바늘(924A)이 집어넣어져 있다. 도 9d는 다양한 실시예에 따르는 카트리지 기반 피부 미용기 또는 손잡이 모듈(920)의 간단한 단면도로, 하나 이상의 바늘(924A)이 전개되어 있다. 손잡이 모듈(920)은 전개형 바늘 모듈(deployable needle module, DNM)(924)과, 모터 및 LED 모듈(motor and LED module, MLM)(922)을 구비할 수 있다. 일실시예에서, DNM(924)은 분리가능하게 결합할 수 있는 카트리지 모듈일 수 있다. 추가의 실시예에서, DNM(924)은 1회용 카트리지 모듈(detachable cartridge module, DCM)(924)일 수 있으며, 이 DCM은 치료 용도 또는 피시술자용으로 변경이 가능하다. 추가의 실시예에서, DCM(924)은 사용후에 폐기하거나 오토클레이브 또는 화학 공정을 통해서 세척할 수 있다.

[77] 도 9c 및 9d에 도시한 바와 같이, MLM(922)은 하나 이상의 모터(922A), 길이방향으로 연장가능한 구동암(922B), 구동축(922C), 외부 케이싱(922D), 신호 입력부(922E), 광 발생기 모듈(922H), 및 (도 10a 내지 10f에 도시한) DCM(624) 접속부(925)를 구비할 수 있다. 모터(922A)와 광 발생기 모듈(922H)은 하나 이상의 모터(922A)를 동작하기 위한 제어 신호 및 에너지를 수신하는 신호 입력부(922E)와, 광 발생기 모듈(922H)의 광학 기기 또는 모듈(922I)에 전기적으로 연결될 수 있다. 구동암(922B)은 하나 이상의 구동축(922C)에 결합되어, MLM(922)이 DNM(924)에 작동가능하게 결합되면, 구동축은 하나 이상의 바늘(924A)을 길이방향으로 이동시켜 전개 및 후퇴시킬 수 있다.

[78] 도 9c와 9d에 도시한 바와 같이, 전개형 바늘 모듈(924)은 하나 이상의 전개형 바늘(924A), MLM 연결암 및 구동축 결합암용 결합탭(924B), 및 MLM 연결/록킹암(924C)를 구비할 수 있다. MLM 연결/록킹암(924C)은 DCM(924) 접속부(925)의 홈(도 10f의 925D)에 결합되어 록킹되도록 구성할 수 있다. MLM 연결암 및 구동축 결합암용 결합탭(924B)은 (도 10b에 도시한 바와 같은)실시예에서 탭(924B)이 내측으로 가압되면, 연결/록킹암(924C)은 MLM 접속부(925)로부터 분리되도록 구성할 수 있다. 탭(924B)은, (역시 도 10b에 도시한 바와 같이) 탭(924B)이 내측으로 가압될 경우, 구동축 결합암(924D)을 내측 또는 중앙으로 변위시킬 수 있다. 연결/록킹암(924C)이 외부 위치(도 10b)로부터 내측 또는 중심으로(도 9c 및 9d) 가압되면, 암(924C)은 접속부(925)의 홈(925D)에 결합되어 DNM(924)을 MLM(922)에 대해 견고하게 유지할 수 있다. 또한 암(924C)은 탭(924B)을 외측으로 변위 변위시켜 구동축 결합암(924D)이 외측으로 복귀하도록 할 수 있다.

[79] 구동축 결합암(924D)은 이들이 도 10d와 10e에 도시한 바와 같은 외부 위치로 복귀되면, 구동축(922C)의 선단(도 10e의 922F)에 형성된 홈(도 10e의 922G)에 견고하게 결합될 수 있다. 이 구성에서, 모터(922A)는 모터(922A)의 축(922B)에 결합된 구동축(922C)을 통해 (각각, 도 9c와 9d에 도시한 바와 같은 후퇴 또는 전개 위치로부터) DNM(924)의 하나 이상의 바늘(924A)을 확실하게 구동할 수 있다. 또한, 모터(922A)는 정밀한 바늘 전개 깊이 또는 DNM(924)의 외부 케이스(도 10a의 924E)를 지나 돌출될 수 있도록 하기 위해 단계식 또는 무한 구동 돌출(922B) 제어방식을 가질 수 있다.

[80] 도 10a 내지 10d는 다양한 실시예에 따라 암(924C 및 924D)을 통한 MLM(922)에 대한 다양한 부착단계를 보이는 간단한 부분 단면도이다. 도 10a에 도시한 바와 같이, DNM 또는 DCM(924)은 MLM(922)에서 분리된다. MLM(922)은 광 발생기 모듈(photonic generator module, PGM)(922H), 접속부(925), 구동축 선단(922F)을 끝단부에 구비한다. 도 10a에 도시한 바와 같이, PGM(922H)은 하나 이상의 광 모듈(922I)을 구비할 수 있다. 광 모듈(922I)은 LED 모듈일 수 있으며, PSG(911C) 제어 신호에 기반한 다양한 주파수 및 강도를 갖는 광자를 방출할 수 있다.

[81] 도 10a에 도시한 바와 같이, DNM 또는 DCM(924)은 연결암(924C), 결합탭(924B), 구동축 결합암(924D), 외부 케이스(924E), 및 하나 이상의 바늘(924A)을 구비할 수 있다. 일실시예에서, 구동축 결합암(924D)은 구동축 선단(922F)의 홈(922G)에 견고하게 결합될 수 있는 탭을 구비할 수 있다. 구동축 결합암(924D)은 탭(924B)의 내측 가압을 통해서 (도 10b에 도시한 바와 같이) 복귀가능하게 내측으로 변형될 수 있다. 탭(924B)의 그러한 내측방향 가압은 결합암(924C)을 외측으로 회동시킬 수 있다. 마찬가지로, 접속부(925)의 홈(925D)에 견고하게 결합되어 있는 상태에서 결합암(924C)을 내측으로 가압하면, (DNM(920)의 중심축에 대해) 암 또는 탭(924B)을 외측으로 이동시킬 수 있다. 그러한 외측방향 이동에 의해 구동축 결합암(924D)은 도 10a에 도시한 바와 같은 비변형 상태로의 복귀가 가능할 수 있다.

[82] 일실시예에서, DNM 또는 DCM(924)은 도 10b에 도시한 바와 같이 암 또는 탭(924B)의 제 1완전 압축에 의해서 MLM(922)에 견고하게 결합될 수 있다. 상술한 바와 같이, 그러한 내측방향 압축은 결합암(924C)의 외측 회동을 일으킬 수 있으며, 구동축 결합암들(924D)은 서로를 향해 내측으로 변형될 수 있다. (도 10D에 도시한 바와 같이) MLM(922)에 대한 DNM(924)의 견고한 결합을 위해 DNM 또는 DCM(924)이 MLM(922)의 말단쪽으로 전진함에 따라, 구동축 결합암(924D)은 그들이 구동축(922C) 선단(922F)의 홈(922G) 내에 결합되도록 압축될 수 있다. DNM 또는 DCM(924)이 MLM(922)의 말단 위에 배치된 후에, 구동축 결합암(924D)은 구동축(922C) 선단(922F)의 홈(922G) 내에 배치되고, 결합암(924C)은 도 10c에 도시한 바와 같이, MLM(922)의 접속부(925)의 홈(925D)에 인접하게 된다.

[83] MLM(922)에 대한 DNM(924)의 결합을 완성하기 위해, 도 10d에 도시한 바와 같이 결합암(924C)을 내측으로 가압할 수 있다. 결합암(924C)의 가압으로 암 또는 탭(924B)은 외측으로 이동될 수 있다. 그러한 탭(924B)의 외측 이동으로 구동축 결합암(924D)은 비변형 상태로 복귀되며 (도 10d에 도시한 바와 같이) MLM(922)의 구동축 선단(922F)의 홈(922G)에 견고하게 결합된다. 일실시예에서, 하나의 결합암(924C), 구동축 결합암(924D), 및 탭(924B)을 DNM(924)에서 이용할 수 있다. DNM(924)을 MLM(922)에 견고하게 결합한 후에, 모터(922A)를 통해 MLM(922)은 도 10e에 도시한 바와 같이, 하나 이상의 바늘(924A)을 제어가능하게 전개시킬 수 있다. 도 10f는 다양한 실시예에 따르는 DNM 접속부(925)의 간단한 단면도이다.

[84] 상술한 바와 같이, 접속부(925)는 하나 이상의 홈(925D)을 구비하여 DNM(924)의 결합암(924C)에 견고하게 결합될 할 수 있다. 또한 접속부(925)는 다수의 구멍 또는 개구(925A, 925B, 925C)를 구비할 수 있다. 중앙 구멍(925A)은 MLM(922)의 구동축(922C) 선단(922F)이 통과할 수 있는 크기로 될 수 있다. 구멍(925C)은 광 모듈(922I)이 DNM(924) 내로 통과함으로써 광자가 생성될 수 있는 크기로 될 수 있으며, 하나 이상의 광 모듈(922I) 상에 배치될 수 있다.

일실시예에서, DNM(924)의 외부 케이스(924E)는 반투명일 수 있으며, 광자를 DNM(924)의 바늘 영역까지 전달하는 도파관으로서 작용할 수 있다. 구멍(925B)은 전기 결합핀(도 11a의 924G)이 DNM(924)으로부터 MLM(922)의 전기 커플링까지 통과할 수 있는 크기로 형성될 수 있다. 핀(924G)은 전선(914B) 및 MLM(922)을 통해 RFSG(911A)로부터 하나 이상의 바늘(924A)까지 전기 신호를 전달할 수 있다.

[85] 도 11a는 다양한 실시예에 따르는 MLM(922)에 결합된 DNM(924)의 간단한 부분 단면도로, 바늘(924A)이 전개되어 있다. 도 11a에 도시한 바와 같이, DNM(924)은 (일실시예에서) 스프링 장전 베이스(924H)를 갖는 전기 결합핀(924G) 세트를 더 포함할 수 있다. 상술한 바와 같이, 핀(924G)은 접속부(925)의 구멍(925B)을 통해 MLM(922) 내의 전기 콘택까지 연장될 수 있다. 도시된 한쌍의 핀(924G)을 따라서, 하나 이상의 핀(924G)을 다양한 실시예에 따르는 DNM(924)에서 이용할 수 있다. 구동축 결합암(924D)은 옵셋(924I)을 구비할 수 있으며, 이 옵셋은 암 또는 탭(924B)에 결합되도록 구성할 수 있다.

[86] 도 11a에 도시한 바와 같이, 바늘 어레이 또는 조립체(924F)가 전개되면, 내내측으로 가압된 탭(924B)은 (옵셋(924I)을 통해) 구동축 결합암(924D)과 결합하지 않게 된다. 그러한 구성은 바늘 조립체(924F)가 적어도 부분적으로 전개될 경우, MLM(922)에 대한 DNM(924)의 의도하지 않은 분리를 방지할 수 있다. 도 11a에 도시한 바와 같이, 전기 결합핀(924G)은 스프링 장전 베이스(924H) 내에 조립될 수 있는 크기로 되어 있다. 일실시예에서, 바늘 조립체(924F)가 이동(다양한 깊이로 수용 및 전개)됨에 따라, 내부 스프링(924M)은 핀(924G)을 강제로 돌출시켜, MLM(922)과의 전기 도전을 유지할 수 있다. 도 11b는 다양한 실시예에 따르는 DNM(924)의 바늘 조립체(924F)의 간단한 단면도이다. 도 11c는 다양한 실시예에 따르는 DNM(924)의 바늘 조립체(924F)의 간단한 분해 단면도이다. 도 11b와 11c에 도시한 바와 같이, 바늘 조립체(924F)는 핀 커버(924J), 구동암 모듈(924L), 바늘(914A), 베이스(924H)를 갖는 핀(924G), 및 바늘 인쇄 회로 기판(printed circuit board, PCB)(924K)을 구비할 수 있다.

[87] 일실시예에서, PCB(924K)는 하나 이상의 바늘(924A)을 제 1핀(924G)의 베이스(924H)에, 그리고 다른 하나 이상의 바늘(924A)을 다른 핀(924G)의 베이스(924H)에 결합할 수 있다. 제 1핀(924G)과 제 2핀(924G)은 바늘(924A)의 줄과 행을 교대로 결합하여 그러한 바늘들(924A) 사이에 하나 이상의 쌍극을 형성할 수 있다. 구동축 결합암(924D)은 베이스(924L)를 가질 수 있으며, 이때 커버(924J)는 바늘(924A)용 구멍, PCB(924K)용 홈, 및 (도 11b에 도시한 바와 같은) 결합암 베이스(924L)용 외부홈을 구비한다.

[88] 도 12는 다양한 실시예에 따르는 DTA(900)의 처리 알고리즘(930)을 나타내는 흐름도이다. 상술한 바와 같이, DTA(900), SGC(911), RFSG(911A), NDMC(911B)

및 PSG(911)은 사용자 또는 임상의로 하여금 여러 가지 조작 파라미터를 선택하여 전기, 광(광자)의 원하는 조합을 전달하고, 피부 조직에 대한 기계적인 (바늘) 치료를 가능케 할 수 있다. 알고리즘(930)에서, 사용자는 절개(활동단계 932A 내지 932F), 혼합(활동단계 934A 내지 934F), 및 응고(활동단계 936A 내지 936F)를 포함하는 상이한 조작 모드를 선택할 수 있다. 절개 조작 모드에 있어서, 사용자는 전기 신호 강도(활동단계 932B) 및 인가시간(활동단계 932C)을 선택할 수 있다. CPU(911)는 선택한 강도와 시간(총 유속량-활동단계 932D)에 근거하여 각 활성화를 위해 공급하게 될 총 에너지를 결정할 수 있다. 다음에, 활성화(활동단계 932E, 932F)에 따라, DTA(900)는 조작 파라미터에 근거하여 MLM(922)에 전원을 인가할 수 있다.

[89] 혼합 조작 모드(활동단계 934A)에 있어서, 사용자는 전기 신호 강도, 기동 지연, 및 듀티 주기(활동단계 934B) 및 바늘 전개 깊이와 활성화당 발사 수(활동단계 934C)를 선택할 수 있다. 듀티 주기는 에너지 공급 및 필요한 전개 전의 지연, 에너지 공급 및 바늘이 전개되는 시간, 및 다음번 가능한 듀티 주기 전의 차후 오프 또는 휴식 시간을 포함할 수 있다. 상술한 바와 같이, 모터(922A)는 바늘의 돌출(유효 깊이)에 대한 정밀 제어를 가능케 할 수 있다. 일실시예에서, 모터(922A)는 회전력을 종방향 힘으로 전환하는 횡 모터(transverse motor)를 구비할 수 있다. 모터는 약 0.005mm/msec의 모터속도 및 약 1000Hz 약 40N(뉴턴)의 모터 출력을 갖는 헤이던(Haydon) 모델 번호: 21H4AB-05-049일 수 있다(www.haydonkerk.com에 상세히 기술되어 있으며 그의 사양서를 참조로서 여기에 인용한다).

[90] CPU(911)는 선택한 강도와 듀티 주기(총 유속량-활동단계 934D)에 근거하여 각 활성화를 위해 공급하게 될 총 에너지를 결정할 수 있다. 다음에, 활성화(활동단계 934E, 934F)에 따라, DTA(900)는 조작 파라미터에 근거하여 MLM(922)에 전원을 인가할 수 있으며, DNM(924)의 외부 케이스(924E)를 지나 원하는 길이로 바늘 조립체(924F)를 전개시키고, 외부 케이스(924E)이 조직에 인접하게 배치되면, 바늘(924A)이 원하는 깊이까지 조직 내로 침투할 수 있게 한다.

[91] 응고 조작 모드(활동단계 936A)에 있어서, 사용자는 전기 신호 강도 및 기동 지연(활동단계 936B)과 바늘 전개 깊이 및 활성화당 발사 수(936C)를 선택할 수 있다. 상술한 바와 같이, 모터(922A)는 바늘의 돌출(유효 깊이)에 대한 정밀 제어를 가능케 할 수 있다. CPU(911)은 선택한 강도(총 유속량-활동단계 936D)에 근거하여 각 활성화를 위해 공급하게 될 총 에너지를 결정할 수 있다. 다음에, 활성화(활동단계 936E, 936F)에 따라, DTA(900)는 조작 파라미터에 근거하여 MLM(922)에 전원을 인가할 수 있으며, DNM(924)의 외부 케이스(924E)을 지나 원하는 길이로 바늘 조립체(924F)를 전개시키고, 외부 케이스(924E)이 조직에 인접하게 배치되면, 바늘(924A)이 원하는 깊이까지 조직 내로 침투할 수 있게 한다.

[92] 다양한 실시예의 신규한 피부 미용기 및 시스템을 구비할 수 있는 응용은 다층, 멀티칩 모듈을 비롯하여, 고속 컴퓨터, 통신 및 신호처리 회로, 모뎀, 단일 또는 다중 프로세서 모듈, 단일 또는 다중 내장 프로세서, 데이터 스위치, 및 시스템에서 사용한 전기회로를 구비한다. 그러한 피부 미용기 및 시스템은 텔레비전, 휴대전화, 퍼스널 컴퓨터(가령, 랩톱 컴퓨터, 데스크탑 컴퓨터, 핸드헬드 컴퓨터, 태블릿 컴퓨터 등), 워크스테이션, 라디오, 비디오 플레이어, 오디오 플레이어(가령, mp3 플레이어), 차량, 의료기기(가령, 심장 모니터, 혈압 모니터 등) 및 기타 장치와 같은 다양한 전기 시스템에서 서브 콤포넌트로서 추가로 구비할 수 있다. 일부 실시예는 다수의 방법을 포함할 수 있다.

[93] 본원에 기술한 활동은 기술한 순서와 달리 실행할 수 있다. 본원에서 확인한 방법에 대해서 기술한 다양한 활동은 반복, 직렬 또는 병렬 방식으로 실행할 수 있다.

[94] 소프트웨어 프로그램은 컴퓨터 기반 시스템 내의 컴퓨터 판독가능한 매체로부터 불러내서(launch) 소프트웨어 프로그램에 규정된 기능을 실행할 수 있다. 본원에 기술한 방법을 실현 및 실행하도록 설계된 소프트웨어 프로그램을 만들기 위해서 다양한 프로그래밍 언어를 이용할 수 있다. 프로그램은 자바 또는 C++ 같은 오브젝트 지향(object-orientated)언어를 사용하여 오브젝트 지향 포맷으로 짤 수 있다. 또한, 프로그램은 어셈블리 또는 C 같은 수속형 언어(procedural language)를 사용하여 수속 지향 포맷으로 짤 수도 있다. 소포트웨어 콤포넌트는 원격 수속 호출(remote procedure calls)을 비롯하여, 어플리케이션 프로그램 인터페이스나 프로세스간 통신 기술(inter-process communication techniques) 같이, 당업자에게 잘 알려진 다수의 메카니즘을 사용하여 통신할 수 있다. 다양한 실시예의 교시는 어떤 특정한 프로그래밍 언어나 환경으로 제한되지 않는다.

[95] 본 발명의 일부를 구성하는 첨부 도면은 예시의 목적으로 도시한 것일 뿐, 주제를 실시할 수 있는 특정 실시예를 제한하는 것은 아니다. 도시한 실시예는 당업자가 본원에 개시한 교시를 실시할 수 있도록 충분히 상세하게 기술하였다. 그로부터 다른 실시예를 실시 및 유도할 수 있으며, 본 개시내용의 범위로부터 벗어남이 없이 구조적 및 논리적 치환 및 변경을 만들 수 있다. 따라서, 본 상세한 설명은 제한의 의미를 갖는 것은 아니며, 다양한 실시예의 범위는 그러한 특허청구범위의 제목이 붙은 동등물의 전체 범위와 마찬가지로, 첨부한 특허청구범위에 의해서만 규정된다.

[96] 한가지 이상이 실제로 개시되면, 본 발명의 주제를 갖는 그러한 실시예는 편의상 단순히 "발명"이란 용어로서 개별적 또는 집합적으로 본원에 언급할 수 있으며, 본 출원의 범위가 자발적으로 어떤 하나의 발명 또는 발명적인 개념으로 제한되는 것을 의도하는 것은 아니다. 그러므로, 특정 실시예가 본원에 도시 및 기술되었어도, 도시한 특정 실시예를 동일한 목적을 달성하기 위해 추정한 어떤 배열로 치환할 수 있다. 본 개시내용은 다양한 실시예의 임의 및 모든 적용이나

Ex. 2114-190

변형을 커버하도록 의도하였다. 상술한 실시예 및 본원에 특별히 기술하지 않은 다른 실시예의 조합은 상술한 설명을 검토함으로써 당업자에게는 자명해질 것이다.

[97] 기술내용의 요약은 독자로 하여금 기술적인 개시내용의 본질을 신속히 파악할 수 있게 허용하는 요약서를 필요로 하는 37 C.F.R§1.72(b)를 따라서 제공하였다. 이것은 특허청구범위의 범위나 의미를 해석하거나 제한하기 위해 사용하려는 것이 아님을 이해해야 한다. 상기의 상세한 설명에서, 다양한 특징은 개시내용을 간소화하기 위한 목적의 단일 실시예에 함께 기초를 둔다. 본 개시내용의 방법은 각 청구항에서 특별히 열거한 것보다 더 많은 특징을 필요로 것으로 해석하지 않아야 한다. 오히려, 본 발명의 주제는 개시한 단일 실시예의 모든 특징에서 적게 발견할 수 있다. 그러므로, 다음의 특허청구범위는 별개의 실시예로서 자체적으로 존재하는 각 청구항과 함께, 상세한 설명에 포함되어 있다.

산업상 이용가능성

[98] 본 발명은 의료 산업 분야에서의 산업상 이용가능성이 인정된다.

청구범위

[청구항 1] 기구의 말단면으로부터 돌출가능한 다수의 바늘을 갖는 말단(distal end)을 구비하는 기구를, 시술할 피부 조직 위나 근처에 배치하는 단계와;
돌출가능한 바늘에 연결된 모터에 전원을 인가해서(energizing) 상기 말단면으로부터 원하는 거리만큼 하나 이상의 바늘을 돌출시키는 단계와;
상기 하나 이상의 바늘에 전기적으로 연결된 신호 발생기를 통해 하나 이상의 바늘에 전원을 인가해서 하나 이상의 바늘을 진동시키는 단계를 포함하는 피부 조직의 미용방법.

[청구항 2] 제 1항에 있어서, 피부 조직의 적어도 일부, 기구 내부면의 적어도 일부, 및 적어도 하나의 바늘 중 한 곳에 미용 약품을 올려놓는 단계를 더 포함하는 방법.

[청구항 3] 제 1항에 있어서, 상기 기구는 상부 손잡이(proximal handle) 및, 이 손잡이와 분리가능하게 결합되는 전개형 바늘 조립체를 더 구비하고, 상기 돌출가능한 바늘은 상기 바늘 조립체에 배치되는 것인 방법.

[청구항 4] 제 3항에 있어서, 상기 상부 손잡이는 바늘 전개 모터를 구비하는 것인 방법.

[청구항 5] 제 4항에 있어서, 상기 상부 손잡이는 그 안에 하나 이상의 내장식 LED를 더 구비하고, 상기 신호 발생기에 전원이 인가되면 LED에 전원을 인가하는 단계를 더 포함하는 방법.

[청구항 6] 제 5항에 있어서, 상기 LED에 전원을 인가하여 청색 및 적외선 광신호 중 하나를 발생하는 단계를 포함하는 방법.

[청구항 7] 제 4항에 있어서, 상기 바늘 전개 모터는 구동축을 통해 바늘 조립체에 연결되는 것인 방법.

[청구항 8] 제 5항에 있어서, 상기 분리가능하게 결합되는 전개형 바늘 조립체는 상기 하나 이상의 바늘에 광신호를 전달하는 투명부를 구비하는 것인 방법.

[청구항 9] 제 3항에 있어서, 상기 기구는 상기 하나 이상의 바늘에 전기적으로 연결되어 하나 이상의 바늘이 진동하도록 하는 신호를 발생하는 무선주파수(RF) 신호 발생기를 더 포함하는 방법.

[청구항 10] 제 3항에 있어서, 상기 하나 이상의 바늘이 조직에 침투하여 미세 상처를 만들고, 상기 하나 이상의 바늘에 전기적으로 연결된 무선주파수(RF) 신호 발생기를 이용하여, 상기 조직의 미세 상처를 증가시키기에 충분하게 상기 하나 이상의 바늘이 진동하도록 하는 신호를 발생하는 단계를 더 포함하는 방법.

[청구항 11] 말단면 및 다수의 돌출가능한 바늘을 구비하고, 그의 말단면으로부터 하나 이상의 바늘이 돌출가능한 기구와;
상기 하나 이상의 바늘에 연결되고, 특정 신호에 의해 전원이 인가되면 상기 말단면으로부터 원하는 거리만큼 상기 하나 이상의 바늘이 돌출되도록 하는 모터와;
상기 하나 이상의 바늘에 전기적으로 연결되고, 특정 신호에 의해 하나 이상의 바늘에 의해 전원이 인가되면 하나 이상의 바늘이 진동하도록 하는 신호 발생기를 포함하는 피부 조직의 미용기.

[청구항 12] 제 11항에 있어서, 상기 기구는 상기 신호 발생기에 결합가능한 상부단(proximal end)을 구비하는 것인 미용기.

[청구항 13] 제 11항에 있어서, 상기 기구는 상부 손잡이 및, 이 손잡이와 분리가능하게 결합되는 전개형 바늘 조립체를 더 구비하고, 상기 돌출가능한 바늘은 상기 바늘 조립체에 배치되는 것인 미용기.

[청구항 14] 제 13항에 있어서, 상기 상부 손잡이는 모터를 구비하는 것인 미용기.

[청구항 15] 제 14항에 있어서, 상기 상부 손잡이는 그 안에 하나 이상의 내장식 LED를 더 구비하고, 상기 하나 이상의 내장식 LED에 전기적으로 연결된 광신호 발생기를 더 포함하는 미용기.

[청구항 16] 제 15항에 있어서, 상기 하나 이상의 내장식 LED는 청색 및 적외선 광신호 중 하나를 발생하는 미용기.

[청구항 17] 제 14항에 있어서, 상기 모터를 상기 하나 이상의 바늘에 연결하는 구동축을 더 포함하는 미용기.

[청구항 18] 제 15항에 있어서, 상기 분리가능하게 결합되는 전개형 바늘 조립체는 상기 하나 이상의 바늘에 광신호를 전달하는 투명부를 구비하는 미용기.

[청구항 19] 제 13항에 있어서, 상기 하나 이상의 바늘에 전기적으로 연결되는 무선주파수(RF) 신호 발생기를 더 포함하고, 상기 무선주파수(RF) 신호 발생기는 특정 신호에 의해 상기 바늘에 전원이 인가되면 상기 하나 이상의 바늘이 진동하도록 하는 미용기.

[청구항 20] 제 13항에 있어서, 상기 하나 이상의 바늘이 조직에 침투하여 미세 상처를 만들고, 상기 하나 이상의 바늘에 전기적으로 연결된 무선주파수(RF) 신호 발생기를 더 포함하고, 상기 무선주파수(RF) 신호 발생기는 특정 신호에 의해 상기 바늘에 전원이 인가되면 상기 조직의 미세 상처를 증가시키기에 충분하게 상기 하나 이상의 바늘에 진동을 일으키는 것인 미용기.

[Fig. 1a]

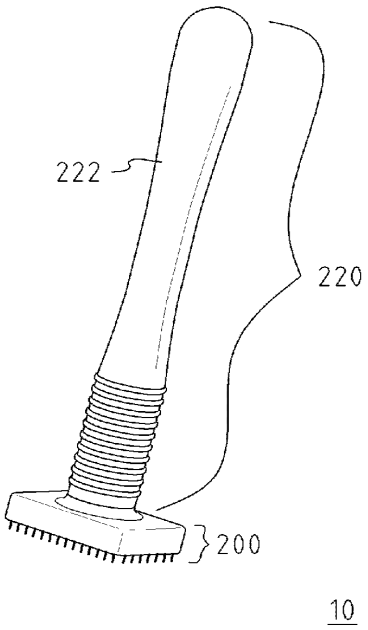

[Fig. 1b]

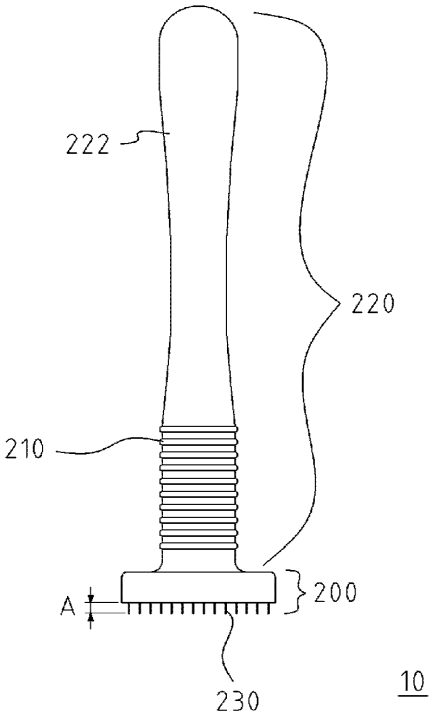

[Fig. 1c]

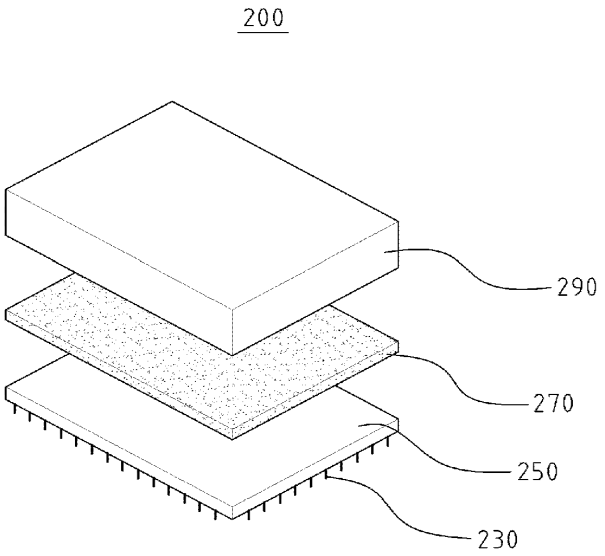

[Fig. 1d]

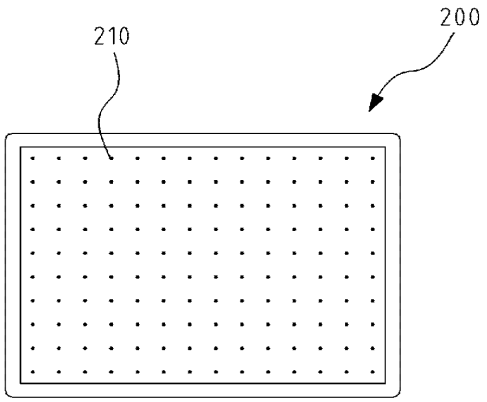

[Fig. 2a]

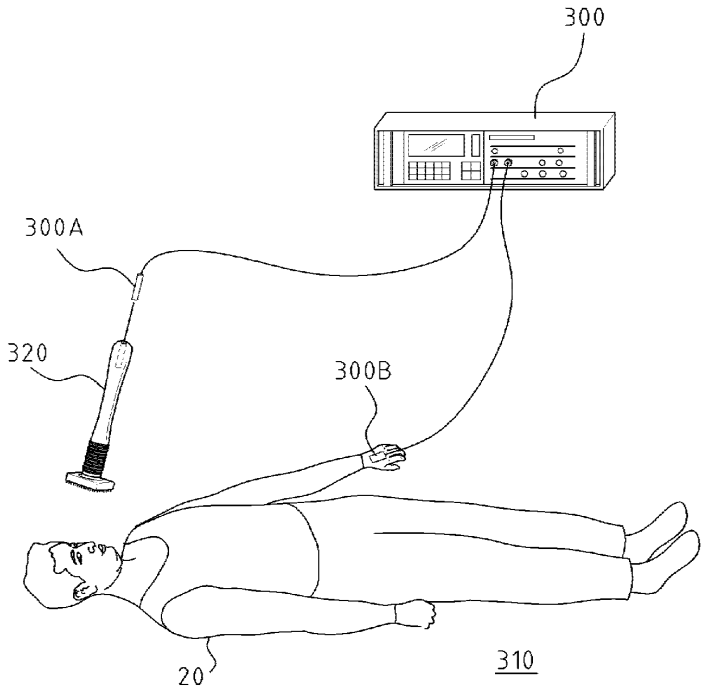

[Fig. 2b]

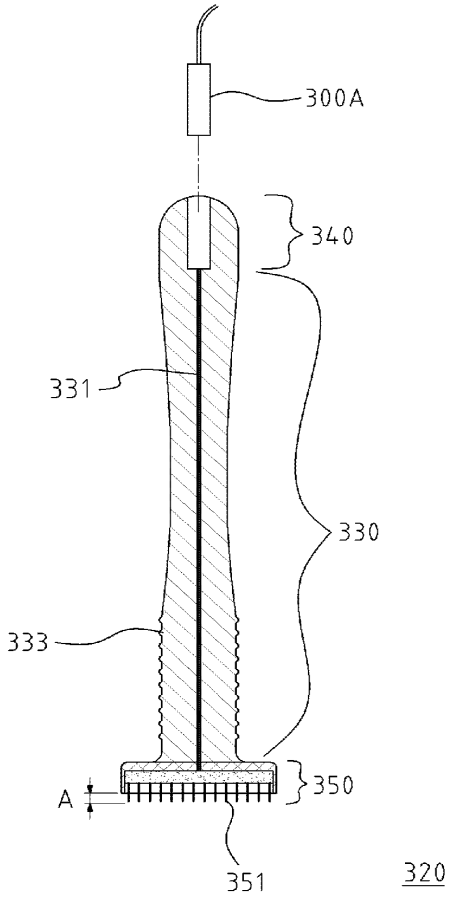

[Fig. 2c]

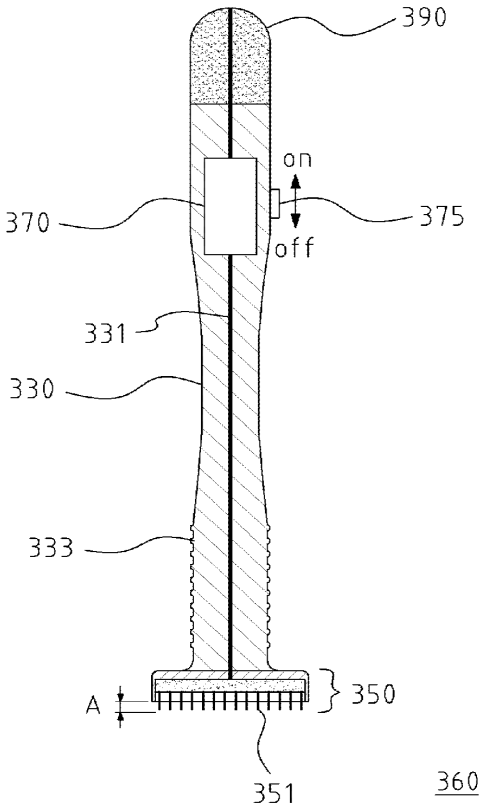

[Fig. 2d]

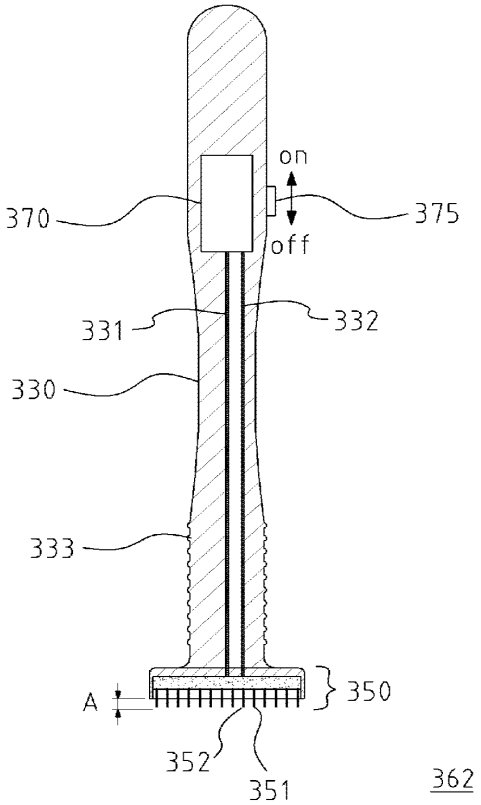

[Fig. 2e]

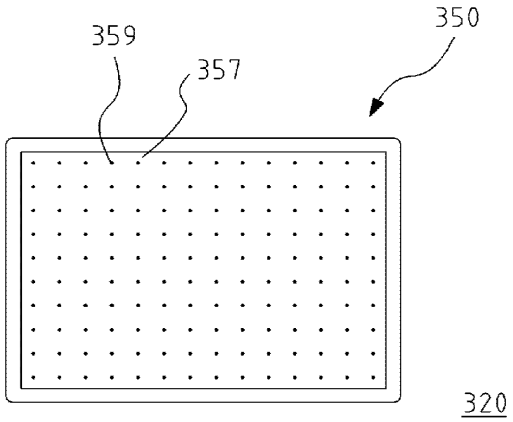

[Fig. 2f]

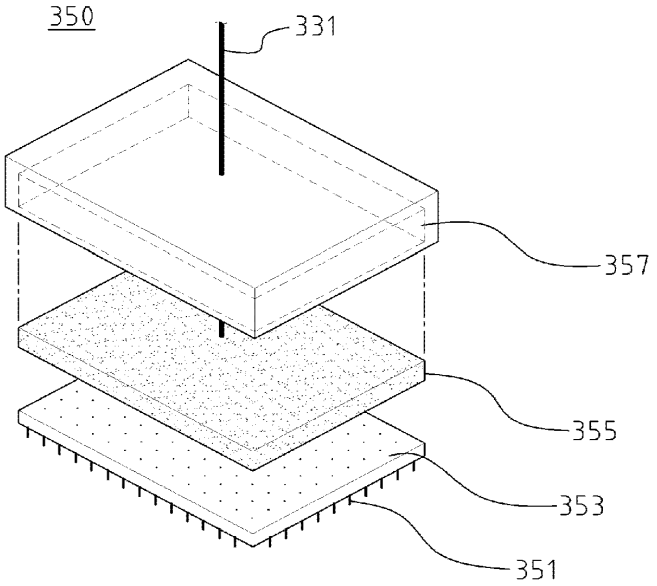

[Fig. 3a]

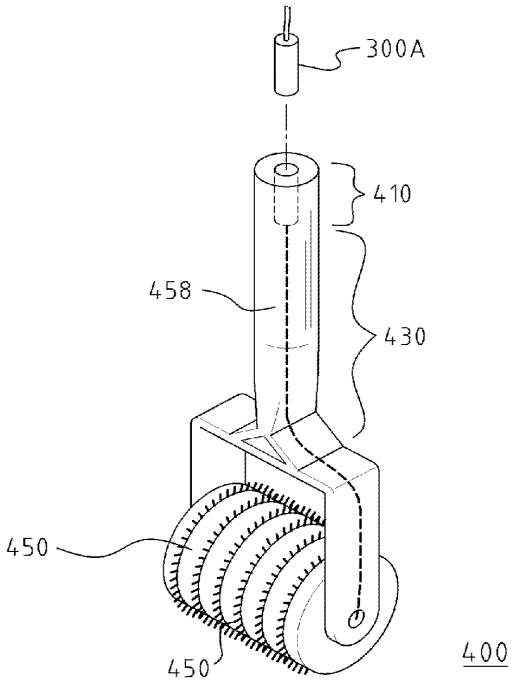

[Fig. 3b]

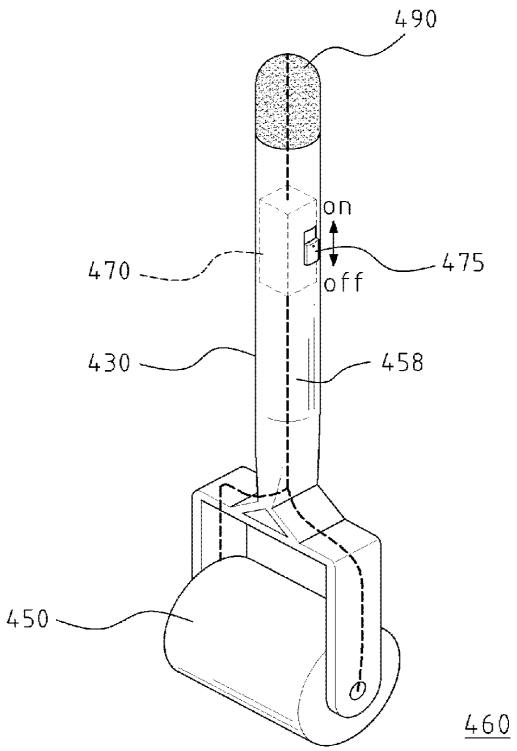
490
on
470
475
off
430
458
450
460

[Fig. 4a]

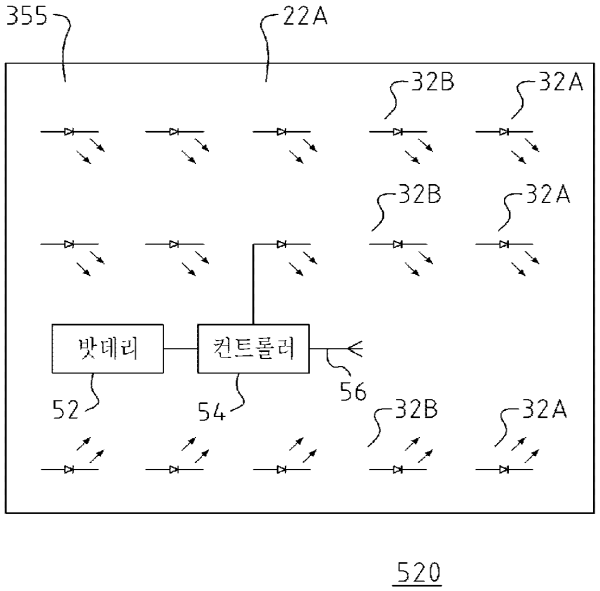
355
22A
32B
32A
32B
32A
밧데리
컨트롤러
52
54
56
32B
32A
520

[Fig. 4b]

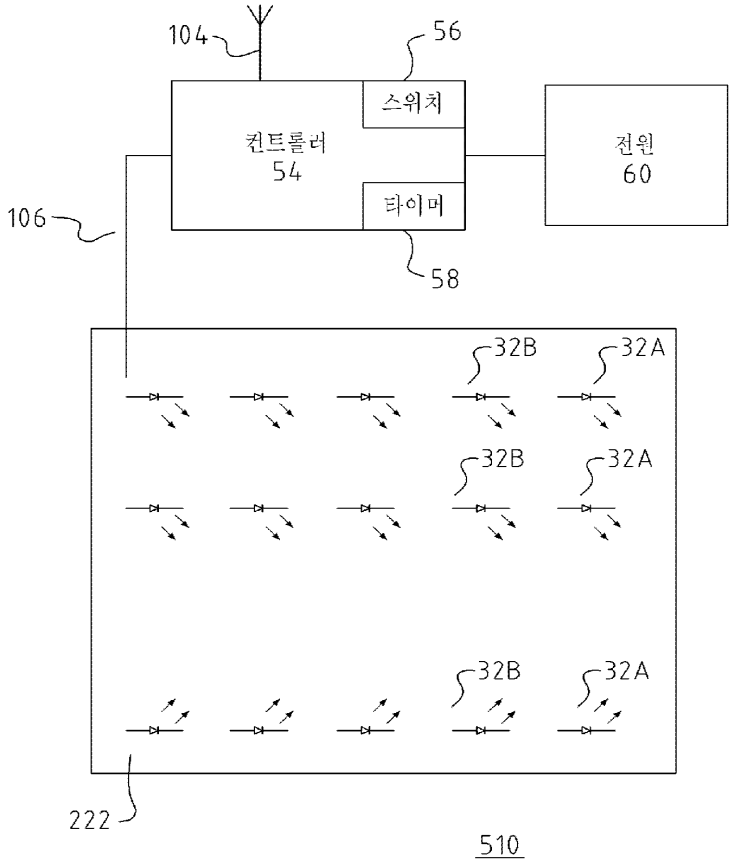
104
56
스위치
컨트롤러
54
타이머
전원
60
106
58
32B
32A
32B
32A
32B
32A
222
510

[Fig. 4c]

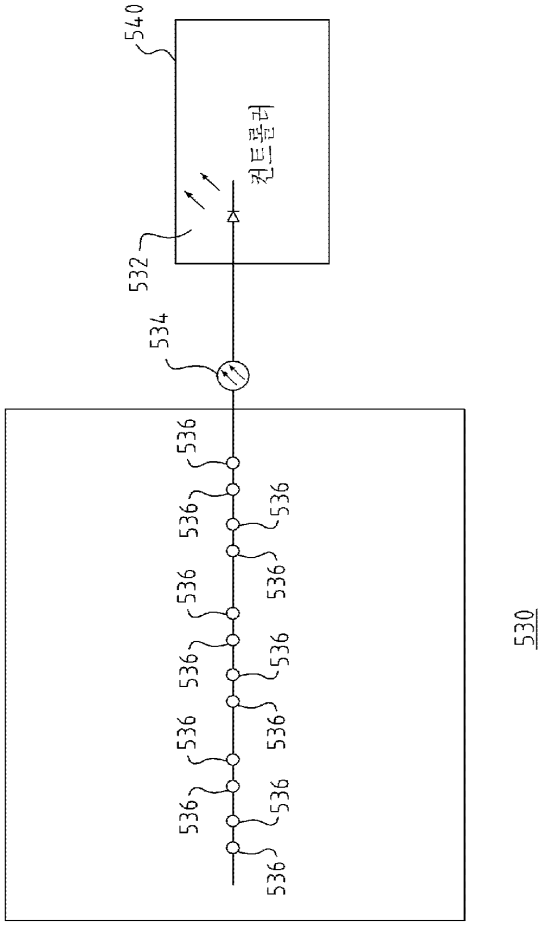

[Fig. 5a]

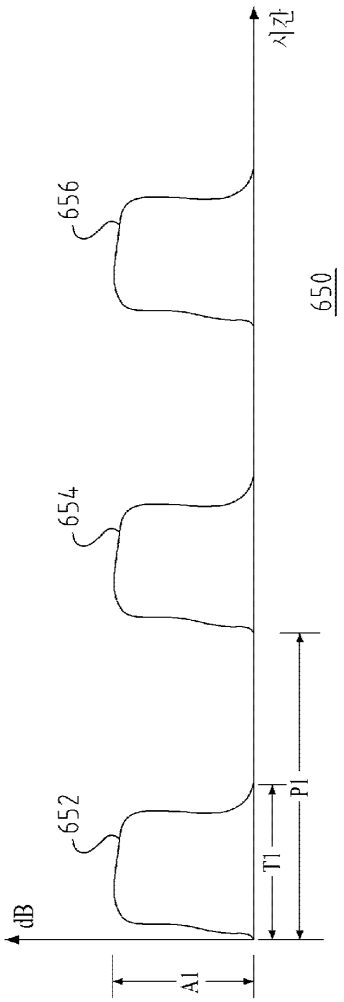

[Fig. 5b]

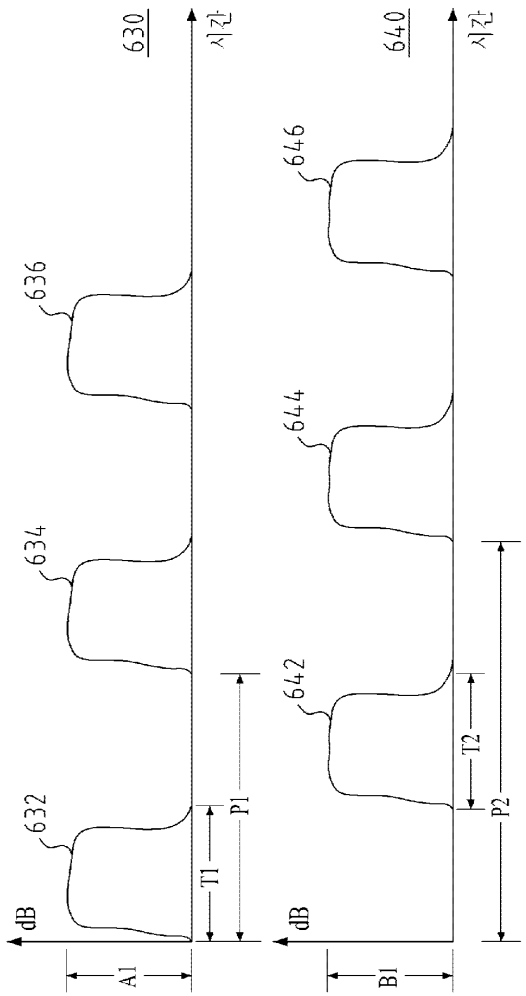

[Fig. 6]

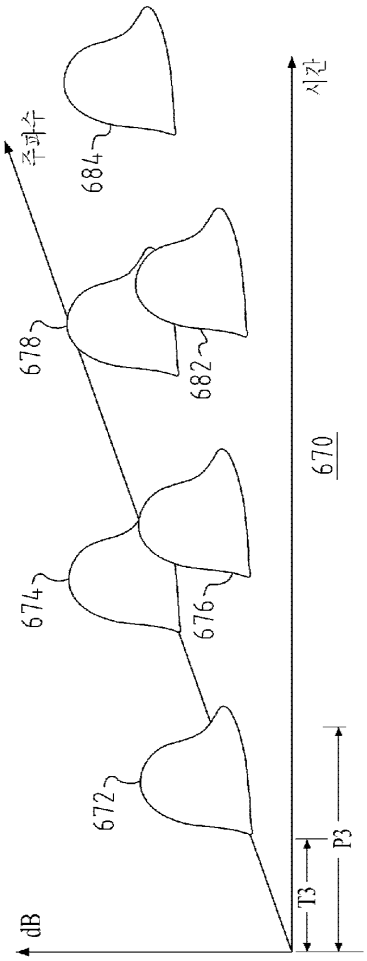

[Fig. 7a]

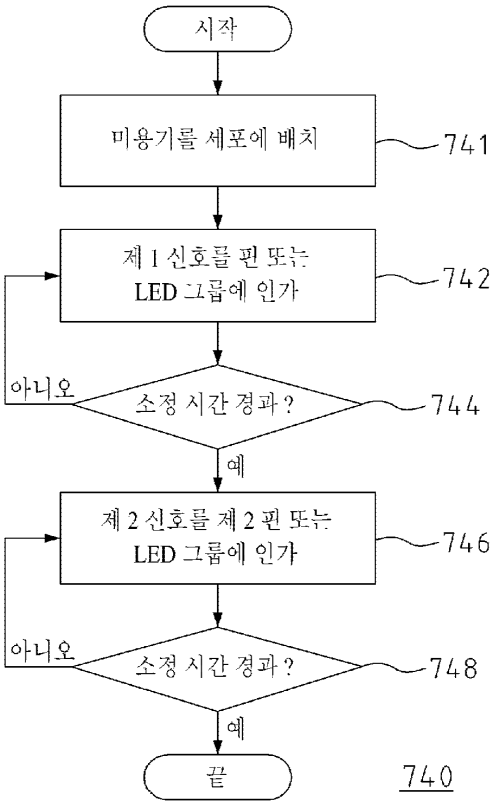
시작
미용기를 세포에 배치
741
제 1 신호를 핀 또는
LED 그룹에 인가
742
아니오
소정 시간 경과 ?
744
예
제 2 신호를 제 2 핀 또는
LED 그룹에 인가
746
아니오
소정 시간 경과 ?
748
예
끝
740

[Fig. 7b]

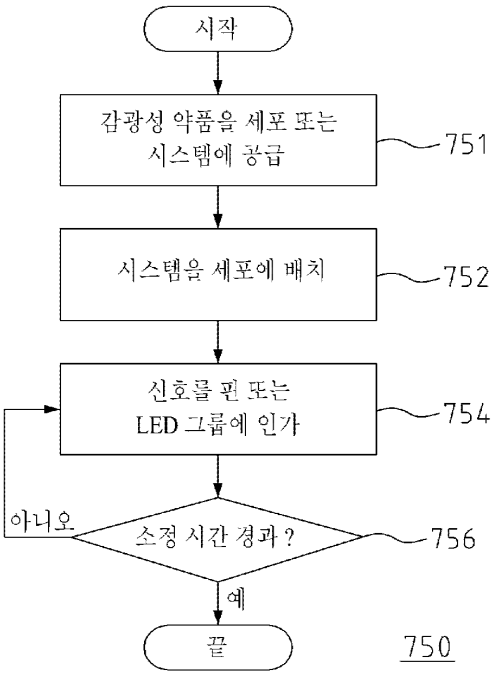
시작
감광성 약품을 세포 또는
시스템에 공급
751
시스템을 세포에 배치
752
신호를 핀 또는
LED 그룹에 인가
754
아니오
소정 시간 경과 ?
756
예
끝
750

[Fig. 7c]

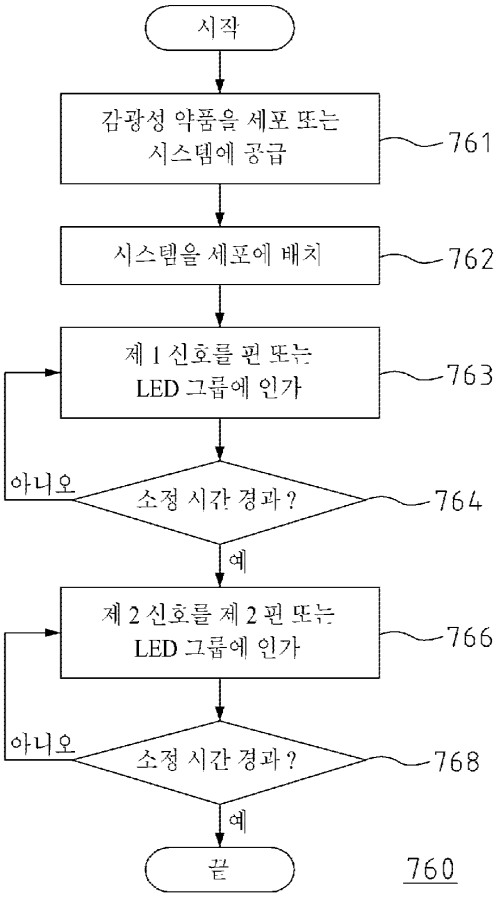
시작
감광성 약품을 세포 또는 시스템에 공급
761
시스템을 세포에 배치
762
제 1 신호를 핀 또는 LED 그룹에 인가
763
아니오
소정 시간 경과?
764
예
제 2 신호를 제 2 핀 또는 LED 그룹에 인가
766
아니오
소정 시간 경과?
768
예
끝
760

[Fig. 8]

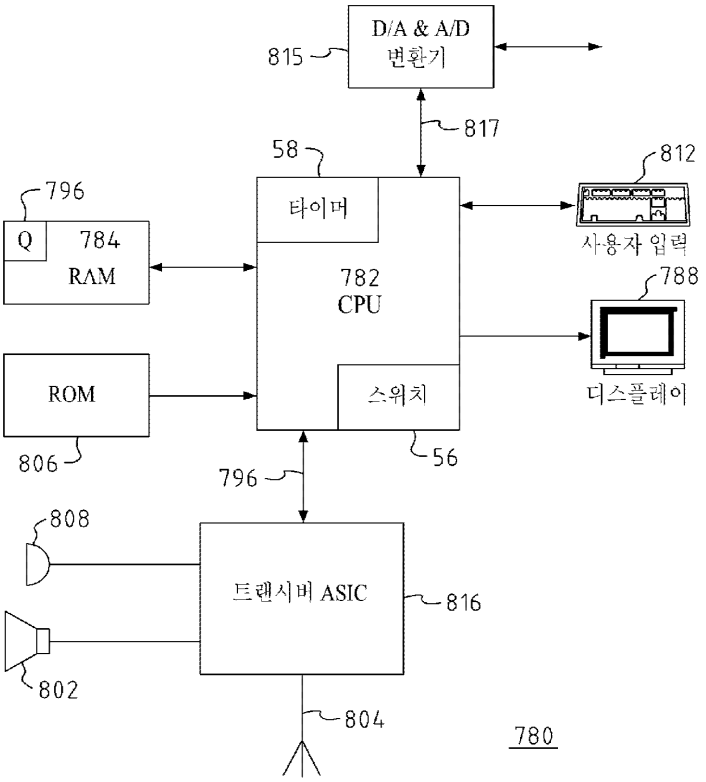
D/A & A/D
변환기
815
817
58
812
796
타이머
Q
784
RAM
782
CPU
사용자 입력
788
ROM
스위치
디스플레이
806
56
796
808
트랜시버 ASIC
816
802
804
780

[Fig. 9a]

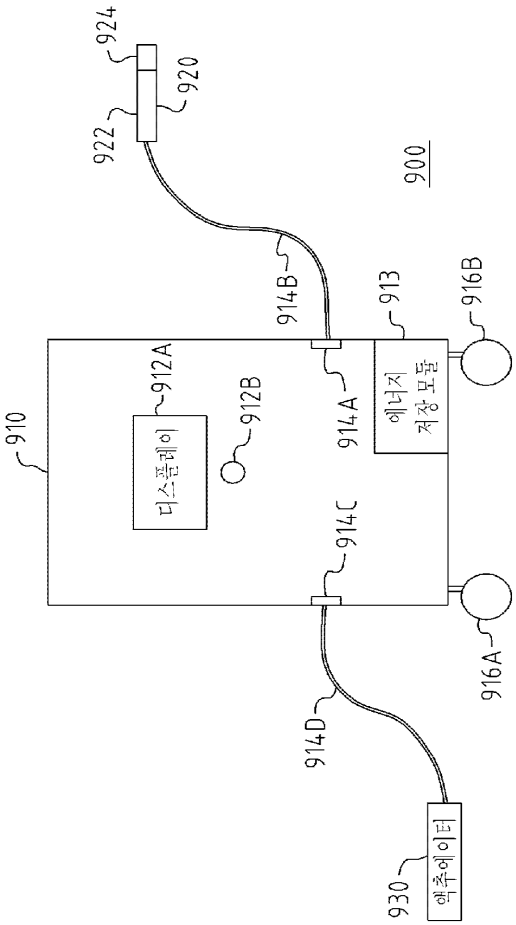
924
920
922
900
914B
913
916B
912A
912B
910
디스플레이
914A
에너지
저장 모듈
914C
916A
914D
930
액추에이터

[Fig. 9b]

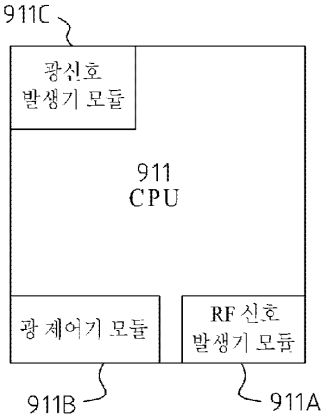
911C
광신호
발생기 모듈
911
CPU
광 제어기 모듈
RF 신호
발생기 모듈
911B
911A

[Fig. 9c]

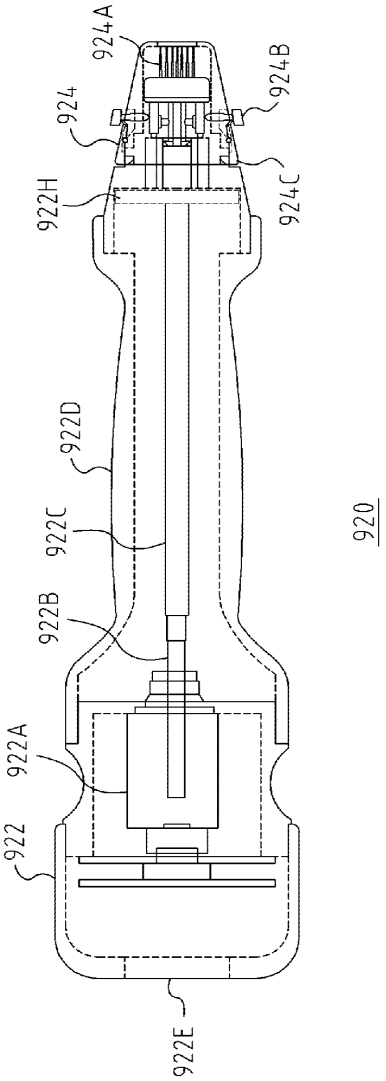

[Fig. 9d]

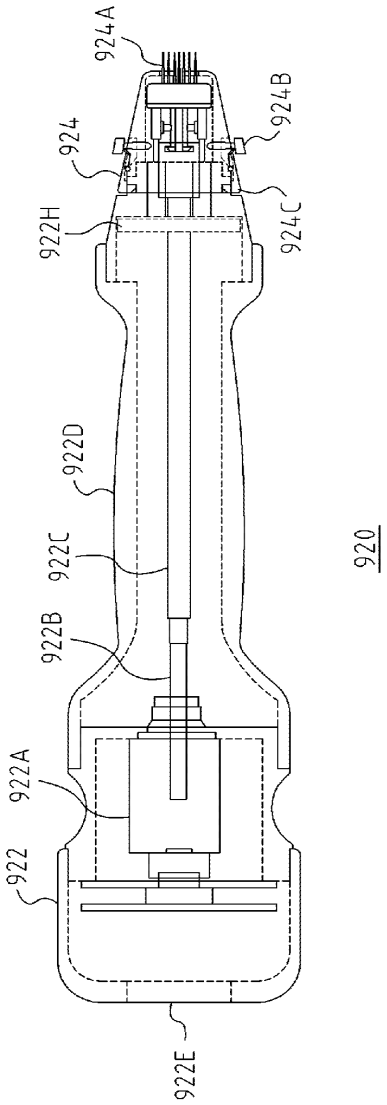

[Fig. 10a]

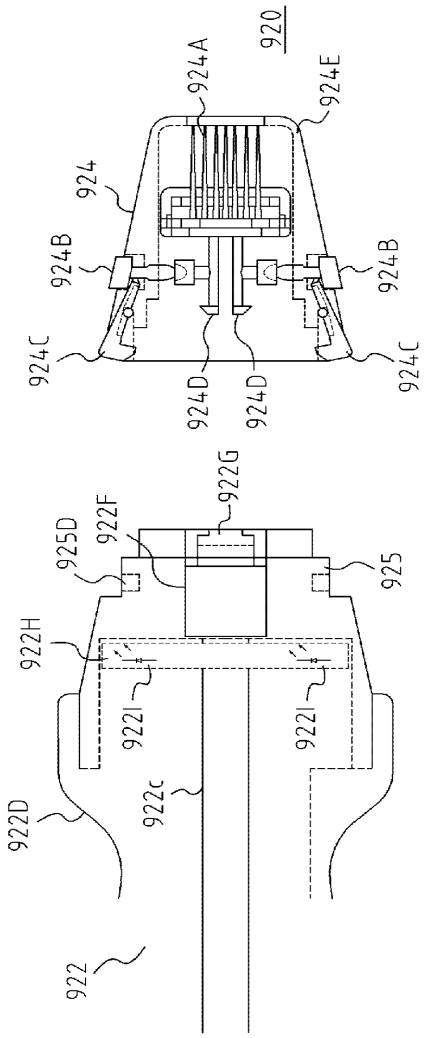
920
924A
924E
924
924B
924B
924C
924C
924D
924D
922G
922F
925D
925
922H
922I
922I
922C
922D
922

[Fig. 10b]

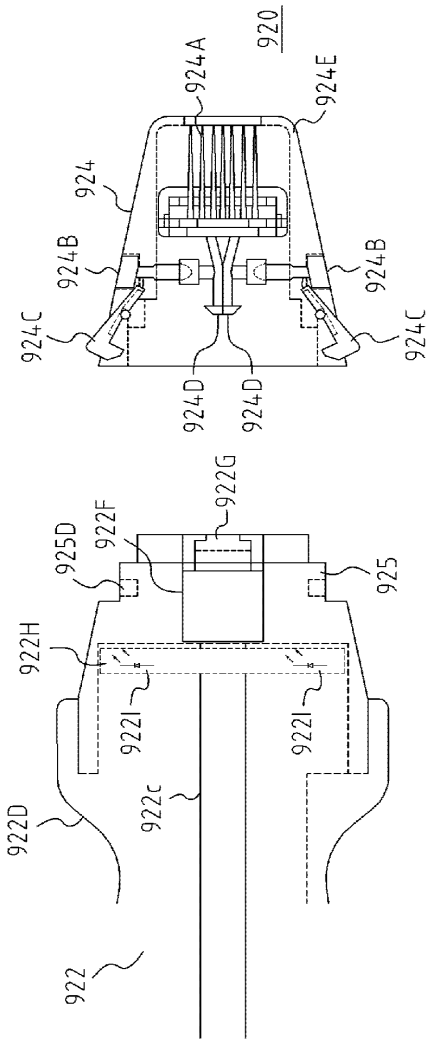
920
924A
924E
924
924B
924B
924C
924C
924D
924D
922G
922F
925D
925
922H
922I
922I
922c
922D
922

Ex. 2114-214

[Fig. 10c]

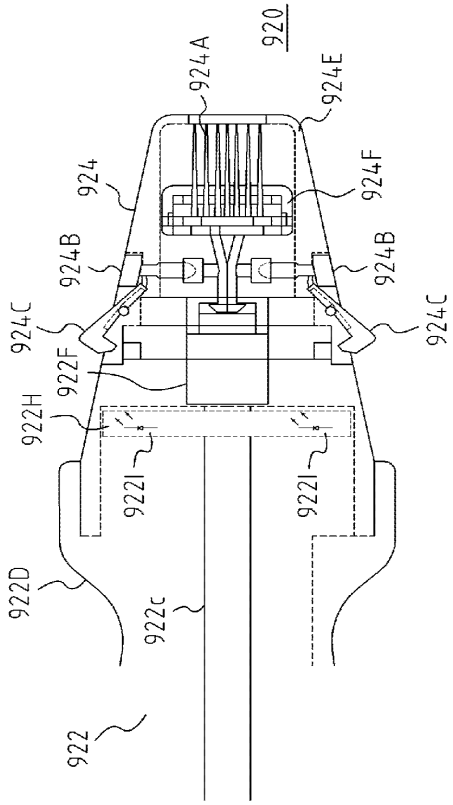

[Fig. 10d]

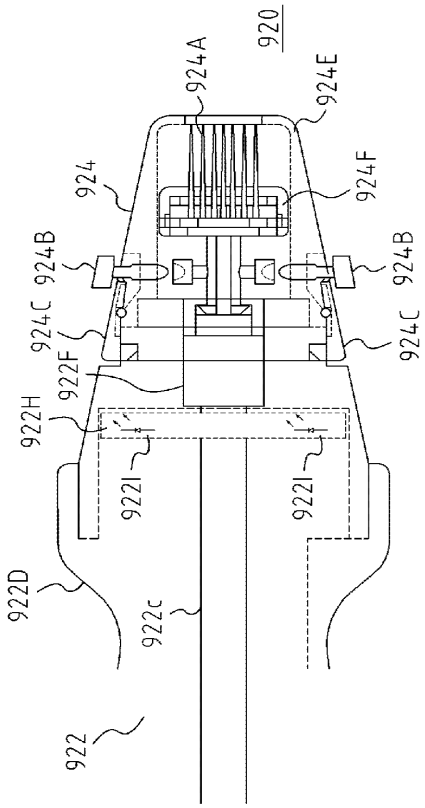
920
924A
924E
924
924F
924B
924B
924C
924C
922F
922H
922I
922I
922D
922c
922

[Fig. 10e]

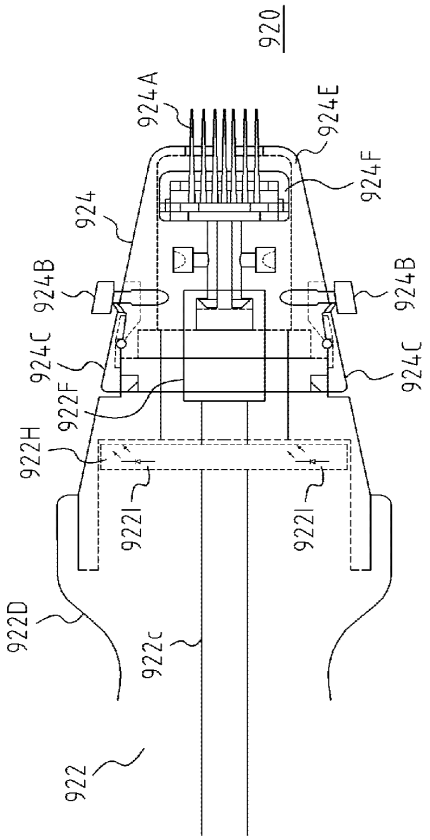

[Fig. 10f]

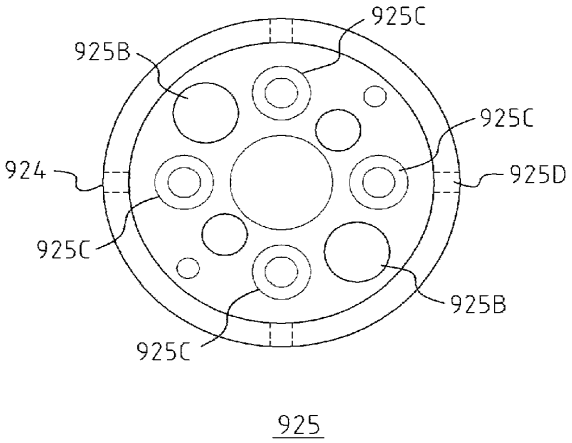

[Fig. 11a]

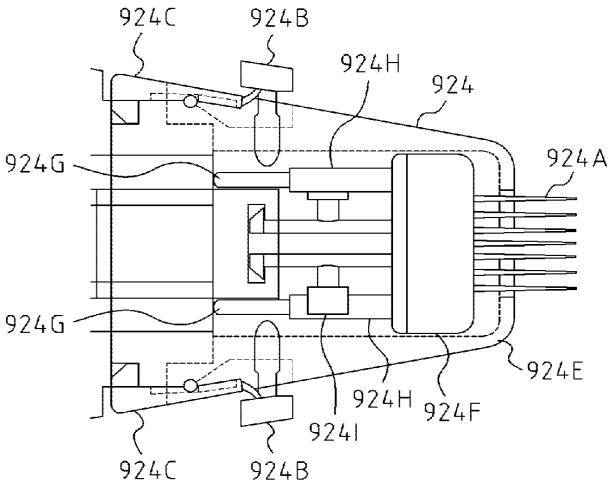

[Fig. 11b]

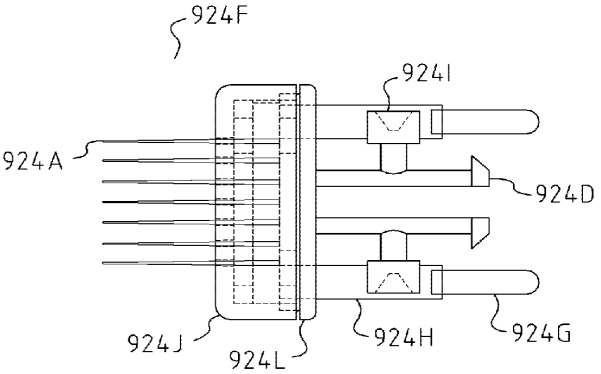

[Fig. 11c]

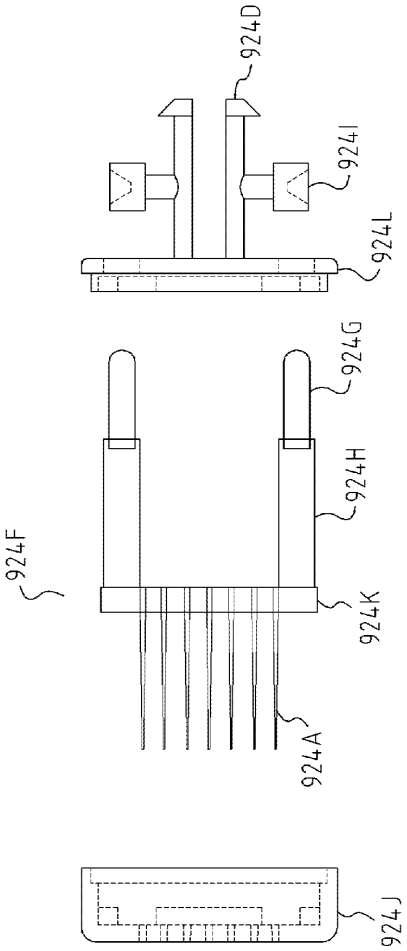

[Fig. 12]

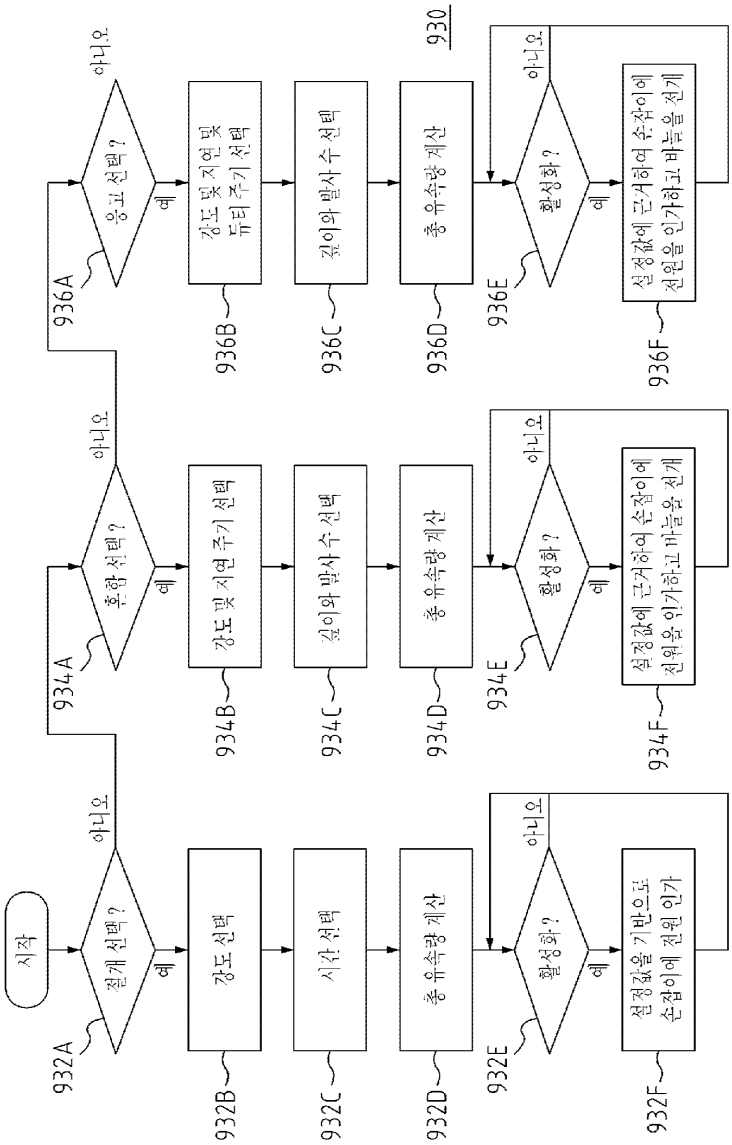
930
시작
절개 선택?
예
아니오
932A
강도 선택
932B
시간 선택
932C
총 유속량 계산
932D
활성화?
932E
설정값을 기반으로 손잡이에 전원 인가
932F
혼합 선택?
934A
강도 및 지연 주기 선택
934B
깊이와 발사수 선택
934C
총 유속량 계산
934D
활성화?
934E
설정값에 근거하여 손잡이에 전원을 인가하고 바늘을 전개
934F
응고 선택?
936A
강도 및 지연 및 듀티 주기 선택
936B
깊이와 발사수 선택
936C
총 유속량 계산
936D
활성화?
936E
설정값에 근거하여 손잡이에 전원을 인가하고 바늘을 전개
936F

(12) 특허협력조약에 의하여 공개된 국제출원

(19) 세계지식재산권기구
국제사무국

(43) 국제공개일
2012 년 9 월 7 일 (07.09.2012)

WIPO | PCT

(10) 국제공개번호
WO 2012/118293 A3

(51) 국제특허분류:
A61N 1/30 (2006.01) *A61M 37/00* (2006.01)
A61H 23/02 (2006.01) *A61N 5/06* (2006.01)

(21) 국제출원번호: PCT/KR2012/001335

(22) 국제출원일: 2012 년 2 월 22 일 (22.02.2012)

(25) 출원언어: 한국어

(26) 공개언어: 한국어

(30) 우선권정보:
61/449,080 2011 년 3 월 3 일 (03.03.2011) US
13/060,274 2011 년 3 월 30 일 (30.03.2011) US

(72) 발명자; 겸
(71) 출원인 : 라종주 (NA, Jongju) [KR/KR]; 서울특별시 송파구 방이동 225 번지 한양 3 차아파트 1-901, 138-050 Seoul (KR).

(74) 대리인: 특허법인 맥 (MAC PATENT & LAW FIRM); 서울특별시 서초구 양재동 15-3 화승빌딩 5 층, 137-130 Seoul (KR).

(81) 지정국 (별도의 표시가 없는 한, 가능한 모든 종류의 국내 권리의 보호를 위하여): AE, AG, AL, AM, AO, AT, AU, AZ, BA, BB, BG, BH, BR, BW, BY, BZ, CA, CH, CL, CN, CO, CR, CU, CZ, DE, DK, DM, DO, DZ, EC, EE, EG, ES, FI, GB, GD, GE, GH, GM, GT, HN, HR, HU, ID, IL, IN, IS, JP, KE, KG, KM, KN, KP, KR, KZ, LA, LC, LK, LR, LS, LT, LU, LY, MA, MD, ME, MG, MK, MN, MW, MX, MY, MZ, NA, NG, NI, NO, NZ, OM, PE, PG, PH, PL, PT, QA, RO, RS, RU, RW, SC, SD, SE, SG, SK, SL, SM, ST, SV, SY, TH, TJ, TM, TN, TR, TT, TZ, UA, UG, US, UZ, VC, VN, ZA, ZM, ZW.

(84) 지정국 (별도의 표시가 없는 한, 가능한 모든 종류의 역내 권리의 보호를 위하여): ARIPO (BW, GH, GM, KE, LR, LS, MW, MZ, NA, RW, SD, SL, SZ, TZ, UG, ZM, ZW), 유라시아 (AM, AZ, BY, KG, KZ, MD, RU, TJ, TM), 유럽 (AL, AT, BE, BG, CH, CY, CZ, DE, DK, EE, ES, FI, FR, GB, GR, HR, HU, IE, IS, IT, LT, LU, LV, MC, MK, MT, NL, NO, PL, PT, RO, RS, SE, SI, SK, SM, TR), OAPI (BF, BJ, CF, CG, CI, CM, GA, GN, GQ, GW, ML, MR, NE, SN, TD, TG).

[다음 쪽 계속]

(54) **Title**: SKIN CARE METHOD, APPARATUS AND SYSTEM

(54) **발명의 명칭** : 피부 미용방법, 미용기 및 미용시스템

[Fig. 1a]

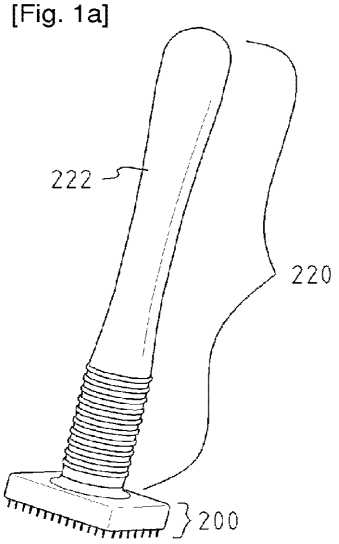

10

(57) **Abstract**: Disclosed are a skin care method, an apparatus thereof and a system thereof. The present invention comprises a flat plate portion in which a plurality of metallic needle bodies are inserted onto a surface thereof; a handle portion is coupled to the flat plate portion on the central axis of the flat plate portion; and an electricity input portion which is coupled to the handle portion and is connected to a connection terminal from an electricity generation device so as to allow an electric current to flow through the plurality of metallic needle bodies. The absorption of a solution, a cream, a gel, an ointment and the like on a skin layer according to the present invention is remarkably increased by applying an ion stimulus or an electrical stimulus of predetermined frequency to the skin layer, thereby enabling effective regeneration of skin tissue.

(57) **요약서**: 피부 미용방법, 미용기 및 미용시스템이 개시된다. 본 발명은, 일면에 복수개의 금속성 침체가 삽입된 평판부, 평판부의 중심축 상에서 평판부에 결합되는 손잡이부, 및 손잡이부에 결합되며, 복수개의 금속성 침체에 전기가 도통되도록 전기발생 장치로부터의 연결단자와 접속되는 전기 입력부를 구비한다. 본 발명에 의하면, 피부층에서의 이온 자극 및 소정 주파수의 전기적인 진동 자극을 가함으로써, 피부층에서의 용액, 크림, 젤, 연고제 등의 흡수율을 획기적으로 높여 피부조직의 효과적인 재생이 가능하다.

WO 2012/118293 A3

공개:

(88) 국제조사보고서 공개일: 2012 년 12 월 20 일

— 국제조사보고서와 함께 (조약 제 21 조(3))

INTERNATIONAL SEARCH REPORT

International application No.
PCT/KR2012/001335

A. CLASSIFICATION OF SUBJECT MATTER

A61N 1/30(2006.01)i, A61H 23/02(2006.01)i, A61M 37/00(2006.01)i, A61N 5/06(2006.01)i

According to International Patent Classification (IPC) or to both national classification and IPC

B. FIELDS SEARCHED

Minimum documentation searched (classification system followed by classification symbols)

A61N 1/30; A61B 18/00; A61H 15/00; A61B 18/20; A61H 39/08; A61N 1/00; A61N 1/06

Documentation searched other than minimum documentation to the extent that such documents are included in the fields searched
Korean Utility models and applications for Utility models: IPC as above
Japanese Utility models and applications for Utility models: IPC as above

Electronic data base consulted during the international search (name of data base and, where practicable, search terms used)

eKOMPASS (KIPO internal) & Keywords: skin, beauty appliance, protrusion, needle, motor, distance, signal, electricity, vibration.

C. DOCUMENTS CONSIDERED TO BE RELEVANT

Category*	Citation of document, with indication, where appropriate, of the relevant passages	Relevant to claim No.
Y	KR 10-2011-0002210 A (YANG, WON DONG) 07 January 2011 See paragraphs [0024], [0055], [0057], [0062], [0071], [0073]-[0075], [0078], [0095], [0099]-[0100], [0103], [0107] and [0211], claims 1-3, 11 and 14 and figure 4.	1-20
Y	US 2008-0082090 A1 (MANSTEIN, DIETER) 03 April 2008 See paragraphs [0002] and [0036], claims 1, 3-5, 16, 19 and 22-24 and figures 3-5.	1-20
A	KR 10-2010-0018288 A (NA, JONG JU) 17 February 2010 See paragraphs [0030]-[0037] and [0043], claims 3-4 and figures 4-6.	1-20
A	JP 2009-506873 A (THE FOUNDRY, INC.) 19 February 2009 See paragraphs [0053], [0085] and [0088], claims 1-4 and 14-17 and figures 8A-8C.	1-20

☐ Further documents are listed in the continuation of Box C. ☒ See patent family annex.

* Special categories of cited documents:
"A" document defining the general state of the art which is not considered to be of particular relevance
"E" earlier application or patent but published on or after the international filing date
"L" document which may throw doubts on priority claim(s) or which is cited to establish the publication date of another citation or other special reason (as specified)
"O" document referring to an oral disclosure, use, exhibition or other means
"P" document published prior to the international filing date but later than the priority date claimed
"T" later document published after the international filing date or priority date and not in conflict with the application but cited to understand the principle or theory underlying the invention
"X" document of particular relevance; the claimed invention cannot be considered novel or cannot be considered to involve an inventive step when the document is taken alone
"Y" document of particular relevance; the claimed invention cannot be considered to involve an inventive step when the document is combined with one or more other such documents, such combination being obvious to a person skilled in the art
"&" document member of the same patent family

Date of the actual completion of the international search	Date of mailing of the international search report
28 SEPTEMBER 2012 (28.09.2012)	**28 SEPTEMBER 2012 (28.09.2012)**
Name and mailing address of the ISA/KR Korean Intellectual Property Office Government Complex-Daejeon, 139 Seonsa-ro, Daejeon 302-701, Republic of Korea Facsimile No. 82-42-472-7140	Authorized officer Telephone No.

Form PCT/ISA/210 (second sheet) (July 2009)

INTERNATIONAL SEARCH REPORT
Information on patent family members

International application No.
PCT/KR2012/001335

Patent document cited in search report	Publication date	Patent family member	Publication date
KR 10-2011-0002210 A	07.01.2011	NONE	
US 2008-0082090 A1	03.04.2008	AU 2005-231443 A1	20.10.2005
		AU 2005-231470 A1	20.10.2005
		AU 2005-231470 B2	06.10.2011
		CA 2579145 A1	20.10.2005
		CA 2579146 A1	20.10.2005
		EP 1740117 A2	10.01.2007
		EP 1742588 A1	17.01.2007
		EP 2301471 A1	30.03.2011
		JP 2007-531578 A	08.11.2007
		JP 2007-537781 A	27.12.2007
		JP 4971133 B2	11.07.2012
		US 2005-0222565 A1	06.10.2005
		US 2007-0264288 A1	15.11.2007
		US 2011-0046615 A1	24.02.2011
		US 7824394 B2	02.11.2010
		US 8268332 B2	18.09.2012
		WO 2005-096979 A1	20.10.2005
		WO 2005-096981 A2	20.10.2005
		WO 2005-096981 A3	20.10.2005
		WO 2005-107848 A2	17.11.2005
KR 10-2010-0018288 A	17.02.2010	NONE	
JP 2009-506873 A	19.02.2009	AU 2006-287633 A1	15.03.2007
		AU 2006-287678 A1	15.03.2007
		AU 2008-270794 A1	08.01.2009
		CA 2621354 A1	15.03.2007
		CA 2621535 A1	15.03.2007
		CA 2702420 A1	08.01.2009
		CA 2769813 A1	10.02.2011
		EP 1928540 A2	11.06.2008
		EP 1928540 A4	10.03.2010
		EP 1940300 A2	09.07.2008
		EP 2173870 A1	14.04.2010
		EP 2209424 A1	28.07.2010
		JP 2009-506870 A	19.02.2009
		JP 2010-532219 A	07.10.2010
		US 2007-0055179 A1	08.03.2007
		US 2007-0055180 A1	08.03.2007
		US 2007-0055181 A1	08.03.2007
		US 2007-0060989 A1	15.03.2007
		US 2008-0014627 A1	17.01.2008
		US 2008-0195036 A1	14.08.2008
		US 2008-0197517 A1	21.08.2008
		US 2008-0200863 A1	21.08.2008
		US 2008-0200864 A1	21.08.2008
		US 2008-0248554 A1	09.10.2008

Patent document cited in search report	Publication date	Patent family member	Publication date
		US 2009-0093737 A1	09.04.2009
		US 2009-0275879 A1	05.11.2009
		US 2009-0275899 A1	05.11.2009
		US 2009-0326439 A1	31.12.2009
		US 2010-0010420 A1	14.01.2010
		US 2010-0228182 A1	09.09.2010
		US 2010-0228207 A1	09.09.2010
		US 2011-0028898 A1	03.02.2011
		US 7588547 B2	15.09.2009
		US 7601128 B2	13.10.2009
		US 7967763 B2	28.06.2011
		WO 2007-030367 A2	15.03.2007
		WO 2007-030367 A3	15.03.2007
		WO 2007-030415 A2	15.03.2007
		WO 2007-030415 A3	20.09.2007
		WO 2009-005980 A2	08.01.2009
		WO 2009-005982 A1	08.01.2009
		WO 2009-005995 A1	08.01.2009
		WO 2009-006001 A1	08.01.2009
		WO 2009-006008 A1	08.01.2009
		WO 2009-006009 A1	08.01.2009
		WO 2009-048969 A1	16.04.2009
		WO 2011-017663 A1	10.02.2011
		WO 2011-149980 A1	01.12.2011
		WO 2011-149984 A1	01.12.2011

국 제 조 사 보 고 서

국제출원번호
PCT/KR2012/001335

A. 발명이 속하는 기술분류(국제특허분류(IPC))

A61N 1/30(2006.01)i, A61H 23/02(2006.01)i, A61M 37/00(2006.01)i, A61N 5/06(2006.01)i

B. 조사된 분야

조사된 최소문헌(국제특허분류를 기재)
A61N 1/30; A61B 18/00; A61H 15/00; A61B 18/20; A61H 39/08; A61N 1/00; A61N 1/06

조사된 기술분야에 속하는 최소문헌 이외의 문헌
한국등록실용신안공보 및 한국공개실용신안공보: 조사된 최소문헌란에 기재된 IPC
일본등록실용신안공보 및 일본공개실용신안공보: 조사된 최소문헌란에 기재된 IPC

국제조사에 이용된 전산 데이터베이스(데이터베이스의 명칭 및 검색어(해당하는 경우))
eKOMPASS(특허청 내부 검색시스템) & 키워드: 피부, 미용기, 돌출, 바늘, 모터, 거리, 신호, 전기, 진동.

C. 관련 문헌

카테고리*	인용문헌명 및 관련 구절(해당하는 경우)의 기재	관련 청구항
Y	KR 10-2011-0002210 A (양원동) 2011.01.07 단락 [0024], [0055], [0057], [0062], [0071], [0073]-[0075], [0078], [0095], [0099]-[0100], [0103], [0107]과 [0211], 청구항 1-3, 11과 14 및 도면 4 참조.	1-20
Y	US 2008-0082090 A1 (MANSTEIN, DIETER) 2008.04.03 단락 [0002]와 [0036], 청구항 1, 3-5, 16, 19와 22-24 및 도면 3-5 참조.	1-20
A	KR 10-2010-0018288 A (라종주) 2010.02.17 단락 [0030]-[0037]과 [0043], 청구항 3-4 및 도면 4-6 참조.	1-20
A	JP 2009-506873 A (THE FOUNDRY, INC.) 2009.02.19 단락 [0053], [0085]와 [0088], 청구항 1-4와 14-17 및 도면 8A-8C 참조.	1-20

☐ 추가 문헌이 C(계속)에 기재되어 있습니다.

☒ 대응특허에 관한 별지를 참조하십시오.

* 인용된 문헌의 특별 카테고리:

"A" 특별히 관련이 없는 것으로 보이는 일반적인 기술수준을 정의한 문헌

"E" 국제출원일보다 빠른 출원일 또는 우선일을 가지나 국제출원일 이후에 공개된 선출원 또는 특허 문헌

"L" 우선권 주장에 의문을 제기하는 문헌 또는 다른 인용문헌의 공개일 또는 다른 특별한 이유(이유를 명시)를 밝히기 위하여 인용된 문헌

"O" 구두 개시, 사용, 전시 또는 기타 수단을 언급하고 있는 문헌

"P" 우선일 이후에 공개되었으나 국제출원일 이전에 공개된 문헌

"T" 국제출원일 또는 우선일 후에 공개된 문헌으로, 출원과 상충하지 않으며 발명의 기초가 되는 원리나 이론을 이해하기 위해 인용된 문헌

"X" 특별한 관련이 있는 문헌. 해당 문헌 하나만으로 청구된 발명의 신규성 또는 진보성이 없는 것으로 본다.

"Y" 특별한 관련이 있는 문헌. 해당 문헌이 하나 이상의 다른 문헌과 조합하는 경우로 그 조합이 당업자에게 자명한 경우 청구된 발명은 진보성이 없는 것으로 본다.

"&" 동일한 대응특허문헌에 속하는 문헌

국제조사의 실제 완료일	국제조사보고서 발송일
2012년 09월 28일 (28.09.2012)	**2012년 09월 28일 (28.09.2012)**

ISA/KR의 명칭 및 우편주소
대한민국 특허청
(302-701) 대전광역시 서구 청사로 189,
4동 (둔산동, 정부대전청사)
팩스 번호 82-42-472-7140

심사관
노지명
전화번호 82-42-481-8528

서식 PCT/ISA/210 (두 번째 용지) (2009년 7월)

국 제 조 사 보 고 서
대응특허에 관한 정보

국제출원번호
PCT/KR2012/001335

국제조사보고서에서 인용된 특허문헌	공개일	대응특허문헌	공개일
KR 10-2011-0002210 A	2011.01.07	없음	
US 2008-0082090 A1	2008.04.03	AU 2005-231443 A1	2005.10.20
		AU 2005-231470 A1	2005.10.20
		AU 2005-231470 B2	2011.10.06
		CA 2579145 A1	2005.10.20
		CA 2579146 A1	2005.10.20
		EP 1740117 A2	2007.01.10
		EP 1742588 A1	2007.01.17
		EP 2301471 A1	2011.03.30
		JP 2007-531578 A	2007.11.08
		JP 2007-537781 A	2007.12.27
		JP 4971133 B2	2012.07.11
		US 2005-0222565 A1	2005.10.06
		US 2007-0264288 A1	2007.11.15
		US 2011-0046615 A1	2011.02.24
		US 7824394 B2	2010.11.02
		US 8268332 B2	2012.09.18
		WO 2005-096979 A1	2005.10.20
		WO 2005-096981 A2	2005.10.20
		WO 2005-096981 A3	2005.10.20
		WO 2005-107848 A2	2005.11.17
KR 10-2010-0018288 A	2010.02.17	없음	
JP 2009-506873 A	2009.02.19	AU 2006-287633 A1	2007.03.15
		AU 2006-287678 A1	2007.03.15
		AU 2008-270794 A1	2009.01.08
		CA 2621354 A1	2007.03.15
		CA 2621535 A1	2007.03.15
		CA 2702420 A1	2009.01.08
		CA 2769813 A1	2011.02.10
		EP 1928540 A2	2008.06.11
		EP 1928540 A4	2010.03.10
		EP 1940300 A2	2008.07.09
		EP 2173870 A1	2010.04.14
		EP 2209424 A1	2010.07.28
		JP 2009-506870 A	2009.02.19
		JP 2010-532219 A	2010.10.07
		US 2007-0055179 A1	2007.03.08
		US 2007-0055180 A1	2007.03.08
		US 2007-0055181 A1	2007.03.08
		US 2007-0060989 A1	2007.03.15
		US 2008-0014627 A1	2008.01.17
		US 2008-0195036 A1	2008.08.14
		US 2008-0197517 A1	2008.08.21
		US 2008-0200863 A1	2008.08.21
		US 2008-0200864 A1	2008.08.21
		US 2008-0248554 A1	2008.10.09

국 제 조 사 보 고 서
대응특허에 관한 정보

국제출원번호
PCT/KR2012/001335

국제조사보고서에서 인용된 특허문헌	공개일	대응특허문헌	공개일
		US 2009-0093737 A1	2009.04.09
		US 2009-0275879 A1	2009.11.05
		US 2009-0275899 A1	2009.11.05
		US 2009-0326439 A1	2009.12.31
		US 2010-0010420 A1	2010.01.14
		US 2010-0228182 A1	2010.09.09
		US 2010-0228207 A1	2010.09.09
		US 2011-0028898 A1	2011.02.03
		US 7588547 B2	2009.09.15
		US 7601128 B2	2009.10.13
		US 7967763 B2	2011.06.28
		WO 2007-030367 A2	2007.03.15
		WO 2007-030367 A3	2007.03.15
		WO 2007-030415 A2	2007.03.15
		WO 2007-030415 A3	2007.09.20
		WO 2009-005980 A2	2009.01.08
		WO 2009-005982 A1	2009.01.08
		WO 2009-005995 A1	2009.01.08
		WO 2009-006001 A1	2009.01.08
		WO 2009-006008 A1	2009.01.08
		WO 2009-006009 A1	2009.01.08
		WO 2009-048969 A1	2009.04.16
		WO 2011-017663 A1	2011.02.10
		WO 2011-149980 A1	2011.12.01
		WO 2011-149984 A1	2011.12.01

PTO/AIA/01 (06-12)
Approved for use through 01/31/2014. OMB 0651-0032
U.S. Patent and Trademark Office; U.S. DEPARTMENT OF COMMERCE
Under the Paperwork Reduction Act of 1995, no persons are required to respond to a collection of information unless it displays a valid OMB control number.

DECLARATION (37 CFR 1.63) FOR UTILITY OR DESIGN APPLICATIONS USING AN APPLICATION DATA SHEET (37 CFR 1.76)

Title of Invention	METHOD, SYSTEM, AND APPARATUS FOR DERMALOGICAL TREATMENT

As the below named inventor, I hereby declare that:

This declaration is directed to: [ ] The attached application, or

[X] United States application or PCT international application number PCT/KR2012/001336 filed on February 22, 2012.

The above-identified application was made or authorized to be made by me.

I believe that I am the original inventor or an original joint inventor of a claimed invention in the application.

I hereby acknowledge that any willful false statement made in this declaration is punishable under 18 U.S.C. 1001 by fine or imprisonment of not more than five (5) years, or both.

WARNING:

Petitioner/applicant is cautioned to avoid submitting personal information in documents filed in a patent application that may contribute to identity theft. Personal information such as social security numbers, bank account numbers, or credit card numbers (other than a check or credit card authorization form PTO-2038 submitted for payment purposes) is never required by the USPTO to support a petition or an application. If this type of personal information is included in documents submitted to the USPTO, petitioners/applicants should consider redacting such personal information from the documents before submitting them to the USPTO. Petitioner/applicant is advised that the record of a patent application is available to the public after publication of the application (unless a non-publication request in compliance with 37 CFR 1.213(a) is made in the application) or issuance of a patent. Furthermore, the record from an abandoned application may also be available to the public if the application is referenced in a published applications or an issued patent (see 37 CFR 1.14). Checks and credit card authorization forms PTO-2038 submitted for payment purposes are not retained in the application file and therefore are not publicly available.

LEGAL NAME OF INVENTOR

Inventor: Jongju Na Date (Optional): 3/21/2013

Signature:

Note: An application data sheet (PTO/SB/14 or equivalent), including naming the entire inventive entity, must accompany this form. Use an additional PTO/AIA/01 form for each additional inventor.

This collection of information is required by 35 U.S.C. 115 and 37 CFR 1.63. The information is required to obtain or retain a benefit by the public which is to file (and by the USPTO to process) an application. Confidentiality is governed by 35 U.S.C. 122 and 37 CFR 1.11 and 1.14. This collection is estimated to take 1 minute to complete, including gathering, preparing, and submitting the completed application form to the USPTO. Time will vary depending upon the individual case. Any comment on the amount of time you required to complete this form and/or suggestions for reducing this burden, should be sent to the Chief Information Officer, U.S. Patent and Trademark Office, U.S. Department of Commerce, P.O. Box 1450, Alexandria, VA 22313-1450. DO NOT SEND FEES OR COMPLETED FORMS TO THIS ADDRESS. **SEND TO: Commissioner for Patents, P.O. Box 1450, Alexandria, VA 22313-1450.**

If you need assistance in completing the form, call 1-800-PTO-9199 and select option 2.

PTO/AIA/14 (08-12)
Approved for use through 01/31/2014. OMB 0651-0032
U.S. Patent and Trademark Office; U.S. DEPARTMENT OF COMMERCE
Under the Paperwork Reduction Act of 1995, no persons are required to respond to a collection of information unless it contains a valid OMB control number.

Application Data Sheet 37 CFR 1.76	Attorney Docket Number	NA001KR_PCTUS
	Application Number	
Title of Invention	METHOD, SYSTEM, AND APPARATUS FOR DERMALOGICAL TREATMENT	

The application data sheet is part of the provisional or nonprovisional application for which it is being submitted. The following form contains the bibliographic data arranged in a format specified by the United States Patent and Trademark Office as outlined in 37 CFR 1.76.
This document may be completed electronically and submitted to the Office in electronic format using the Electronic Filing System (EFS) or the document may be printed and included in a paper filed application.

Secrecy Order 37 CFR 5.2

☐ Portions or all of the application associated with this Application Data Sheet may fall under a Secrecy Order pursuant to 37 CFR 5.2 (Paper filers only. Applications that fall under Secrecy Order may not be filed electronically.)

Inventor Information:

Inventor 1 Remove

Legal Name

Prefix	Given Name	Middle Name	Family Name	Suffix
Mr	Jongju		Na	

Residence Information (Select One) ○ US Residency ◉ Non US Residency ○ Active US Military Service

City	Songpa-Gu	Country of Residence	KR

Mailing Address of Inventor:

Address 1	17145 Von Karman Ave.		
Address 2	Scarlet RF Inc		
City	Irvine	**State/Province**	CA
Postal Code	92614	**Country**	US

All Inventors Must Be Listed - Additional Inventor Information blocks may be generated within this form by selecting the **Add** button. Add

Correspondence Information:

Enter either Customer Number or complete the Correspondence Information section below.
For further information see 37 CFR 1.33(a).

☐ **An Address is being provided for the correspondence Information of this application.**

Customer Number	26338		
Email Address	patent@san.rr.com	Add Email	Remove Email

Under the Paperwork Reduction Act of 1995, no persons are required to respond to a collection of information unless it contains a valid OMB control number.

Application Data Sheet 37 CFR 1.76	Attorney Docket Number	NA001KR_PCTUS
	Application Number	
Title of Invention	METHOD, SYSTEM, AND APPARATUS FOR DERMALOGICAL TREATMENT	

Application Information:

Title of the Invention	METHOD, SYSTEM, AND APPARATUS FOR DERMALOGICAL TREATMENT		
Attorney Docket Number	NA001KR_PCTUS	**Small Entity Status Claimed** ☒	
Application Type	Nonprovisional		
Subject Matter	Utility		
Suggested Class (if any)		**Sub Class (if any)**	
Suggested Technology Center (if any)			
Total Number of Drawing Sheets (if any)	21	**Suggested Figure for Publication (if any)**	9C

Publication Information:

☐ Request Early Publication (Fee required at time of Request 37 CFR 1.219)

☐ **Request Not to Publish.** I hereby request that the attached application not be published under 35 U.S.C. 122(b) and certify that the invention disclosed in the attached application **has not and will not** be the subject of an application filed in another country, or under a multilateral international agreement, that requires publication at eighteen months after filing.

Representative Information:

Representative information should be provided for all practitioners having a power of attorney in the application. Providing this information in the Application Data Sheet does not constitute a power of attorney in the application (see 37 CFR 1.32).
Either enter Customer Number or complete the Representative Name section below. If both sections are completed the customer Number will be used for the Representative Information during processing.

Please Select One:	◉ Customer Number	◯ US Patent Practitioner	◯ Limited Recognition (37 CFR 11.9)
Customer Number	26338		

Domestic Benefit/National Stage Information:

This section allows for the applicant to either claim benefit under 35 U.S.C. 119(e), 120, 121, or 365(c) or indicate National Stage entry from a PCT application. Providing this information in the application data sheet constitutes the specific reference required by 35 U.S.C. 119(e) or 120, and 37 CFR 1.78.

Prior Application Status	Pending		Remove
Application Number	Continuity Type	Prior Application Number	Filing Date (YYYY-MM-DD)
13825083	a 371 of international	PCTKR2012001335	2012-02-22

Additional Domestic Benefit/National Stage Data may be generated within this form by selecting the **Add** button. Add

Foreign Priority Information:

Under the Paperwork Reduction Act of 1995, no persons are required to respond to a collection of information unless it contains a valid OMB control number.

Application Data Sheet 37 CFR 1.76	Attorney Docket Number	NA001KR_PCTUS
	Application Number	
Title of Invention	METHOD, SYSTEM, AND APPARATUS FOR DERMALOGICAL TREATMENT	

This section allows for the applicant to claim benefit of foreign priority and to identify any prior foreign application for which priority is not claimed. Providing this information in the application data sheet constitutes the claim for priority as required by 35 U.S.C. 119(b) and 37 CFR 1.55(a).

Remove

Application Number	Country i	Filing Date (YYYY-MM-DD)	Priority Claimed
			○ Yes ◉ No

Additional Foreign Priority Data may be generated within this form by selecting the **Add** button. Add

Authorization to Permit Access:

☐ Authorization to Permit Access to the Instant Application by the Participating Offices

If checked, the undersigned hereby grants the USPTO authority to provide the European Patent Office (EPO), the Japan Patent Office (JPO), the Korean Intellectual Property Office (KIPO), the World Intellectual Property Office (WIPO), and any other intellectual property offices in which a foreign application claiming priority to the instant patent application is filed access to the instant patent application. See 37 CFR 1.14(c) and (h). This box should not be checked if the applicant does not wish the EPO, JPO, KIPO, WIPO, or other intellectual property office in which a foreign application claiming priority to the instant patent application is filed to have access to the instant patent application.

In accordance with 37 CFR 1.14(h)(3), access will be provided to a copy of the instant patent application with respect to: 1) the instant patent application-as-filed; 2) any foreign application to which the instant patent application claims priority under 35 U.S.C. 119(a)-(d) if a copy of the foreign application that satisfies the certified copy requirement of 37 CFR 1.55 has been filed in the instant patent application; and 3) any U.S. application-as-filed from which benefit is sought in the instant patent application.

In accordance with 37 CFR 1.14(c), access may be provided to information concerning the date of filing this Authorization.

Applicant Information:

Providing assignment information in this section does not substitute for compliance with any requirement of part 3 of Title 37 of CFR to have an assignment recorded by the Office.

Under the Paperwork Reduction Act of 1995, no persons are required to respond to a collection of information unless it contains a valid OMB control number.

Application Data Sheet 37 CFR 1.76	Attorney Docket Number	NA001KR_PCTUS
	Application Number	
Title of Invention	METHOD, SYSTEM, AND APPARATUS FOR DERMALOGICAL TREATMENT	

Applicant 1 Remove

If the applicant is the inventor (or the remaining joint inventor or inventors under 37 CFR 1.45), this section should not be completed. The information to be provided in this section is the name and address of the legal representative who is the applicant under 37 CFR 1.43; or the name and address of the assignee, person to whom the inventor is under an obligation to assign the invention, or person who otherwise shows sufficient proprietary interest in the matter who is the applicant under 37 CFR 1.46. If the applicant is an applicant under 37 CFR 1.46 (assignee, person to whom the inventor is obligated to assign, or person who otherwise shows sufficient proprietary interest) together with one or more joint inventors, then the joint inventor or inventors who are also the applicant should be identified in this section.

Clear

○ Assignee ○ Legal Representative under 35 U.S.C. 117 ○ Joint Inventor

○ Person to whom the inventor is obligated to assign. ○ Person who shows sufficient proprietary interest

If applicant is the legal representative, indicate the authority to file the patent application, the inventor is:

Name of the Deceased or Legally Incapacitated Inventor :

If the Applicant is an Organization check here. ☐

Prefix	**Given Name**	Middle Name	**Family Name**	Suffix

Mailing Address Information:

Address 1			
Address 2			
City		**State/Province**	
Country i		Postal Code	
Phone Number		Fax Number	
Email Address			

Additional Applicant Data may be generated within this form by selecting the Add button. Add

Non-Applicant Assignee Information:

Providing assignment information in this section does not subsitute for compliance with any requirement of part 3 of Title 37 of CFR to have an assignment recorded by the Office.

Assignee 1

Complete this section only if non-applicant assignee information is desired to be included on the patent application publication in accordance with 37 CFR 1.215(b). Do not include in this section an applicant under 37 CFR 1.46 (assignee, person to whom the inventor is obligated to assign, or person who otherwise shows sufficient proprietary interest), as the patent application publication will include the name of the applicant(s).

Remove

Under the Paperwork Reduction Act of 1995, no persons are required to respond to a collection of information unless it contains a valid OMB control number.

Application Data Sheet 37 CFR 1.76	Attorney Docket Number	NA001KR_PCTUS
	Application Number	
Title of Invention	METHOD, SYSTEM, AND APPARATUS FOR DERMALOGICAL TREATMENT	

If the Assignee is an Organization check here. ☐

Prefix	**Given Name**	Middle Name	**Family Name**	Suffix

Mailing Address Information:

Address 1			
Address 2			
City		**State/Province**	
Country i		Postal Code	
Phone Number		Fax Number	
Email Address			

Additional Assignee Data may be generated within this form by selecting the Add button. Add

Signature:

Remove

NOTE: This form must be signed in accordance with 37 CFR 1.33. See 37 CFR 1.4 for signature requirements and certifications

Signature	/mwresq/			Date (YYYY-MM-DD)	2013-03-25
First Name	Merle	Last Name	Richman	Registration Number	38282

Additional Signature may be generated within this form by selecting the Add button. Add

This collection of information is required by 37 CFR 1.76. The information is required to obtain or retain a benefit by the public which is to file (and by the USPTO to process) an application. Confidentiality is governed by 35 U.S.C. 122 and 37 CFR 1.14. This collection is estimated to take 23 minutes to complete, including gathering, preparing, and submitting the completed application data sheet form to the USPTO. Time will vary depending upon the individual case. Any comments on the amount of time you require to complete this form and/or suggestions for reducing this burden, should be sent to the Chief Information Officer, U.S. Patent and Trademark Office, U.S. Department of Commerce, P.O. Box 1450, Alexandria, VA 22313-1450. DO NOT SEND FEES OR COMPLETED FORMS TO THIS ADDRESS. **SEND TO: Commissioner for Patents, P.O. Box 1450, Alexandria, VA 22313-1450.**

Privacy Act Statement

The Privacy Act of 1974 (P.L. 93-579) requires that you be given certain information in connection with your submission of the attached form related to a patent application or patent. Accordingly, pursuant to the requirements of the Act, please be advised that: (1) the general authority for the collection of this information is 35 U.S.C. 2(b)(2); (2) furnishing of the information solicited is voluntary; and (3) the principal purpose for which the information is used by the U.S. Patent and Trademark Office is to process and/or examine your submission related to a patent application or patent. If you do not furnish the requested information, the U.S. Patent and Trademark Office may not be able to process and/or examine your submission, which may result in termination of proceedings or abandonment of the application or expiration of the patent.

The information provided by you in this form will be subject to the following routine uses:

1. The information on this form will be treated confidentially to the extent allowed under the Freedom of Information Act (5 U.S.C. 552) and the Privacy Act (5 U.S.C. 552a). Records from this system of records may be disclosed to the Department of Justice to determine whether the Freedom of Information Act requires disclosure of these records.

2. A record from this system of records may be disclosed, as a routine use, in the course of presenting evidence to a court, magistrate, or administrative tribunal, including disclosures to opposing counsel in the course of settlement negotiations.

3. A record in this system of records may be disclosed, as a routine use, to a Member of Congress submitting a request involving an individual, to whom the record pertains, when the individual has requested assistance from the Member with respect to the subject matter of the record.

4. A record in this system of records may be disclosed, as a routine use, to a contractor of the Agency having need for the information in order to perform a contract. Recipients of information shall be required to comply with the requirements of the Privacy Act of 1974, as amended, pursuant to 5 U.S.C. 552a(m).

5. A record related to an International Application filed under the Patent Cooperation Treaty in this system of records may be disclosed, as a routine use, to the International Bureau of the World Intellectual Property Organization, pursuant to the Patent Cooperation Treaty.

6. A record in this system of records may be disclosed, as a routine use, to another federal agency for purposes of National Security review (35 U.S.C. 181) and for review pursuant to the Atomic Energy Act (42 U.S.C. 218(c)).

7. A record from this system of records may be disclosed, as a routine use, to the Administrator, General Services, or his/her designee, during an inspection of records conducted by GSA as part of that agency's responsibility to recommend improvements in records management practices and programs, under authority of 44 U.S.C. 2904 and 2906. Such disclosure shall be made in accordance with the GSA regulations governing inspection of records for this purpose, and any other relevant (i.e., GSA or Commerce) directive. Such disclosure shall not be used to make determinations about individuals.

8. A record from this system of records may be disclosed, as a routine use, to the public after either publication of the application pursuant to 35 U.S.C. 122(b) or issuance of a patent pursuant to 35 U.S.C. 151. Further, a record may be disclosed, subject to the limitations of 37 CFR 1.14, as a routine use, to the public if the record was filed in an application which became abandoned or in which the proceedings were terminated and which application is referenced by either a published application, an application open to public inspections or an issued patent.

9. A record from this system of records may be disclosed, as a routine use, to a Federal, State, or local law enforcement agency, if the USPTO becomes aware of a violation or potential violation of law or regulation.

Doc Code: TRAN.LET
Document Description: Transmittal Letter

PTO/SB/21 (07-09)
Approved for use through 07/31/2012. OMB 0651-0031
U.S. Patent and Trademark Office; U.S. DEPARTMENT OF COMMERCE
Under the Paper Reduction Act of 1995, no persons are required to respond to a collection of information unless it displays a valid OMB control number.

TRANSMITTAL FORM *(to be used for all correspondence after initial filing)*		Application Number	13825083
		Filing Date	Mar 19, 2013
		First Named Inventor	Na, Jongju
		Art Unit	
		Examiner Name	
Total Number of Pages in This Submission		Attorney Docket Number	NA001KR_PCTUS

ENCLOSURES ***(Check all that apply)***

- [ ] Fee Transmittal Form
  - [ ] Fee Attached
- [ ] Amendment / Reply
  - [ ] After Final
  - [ ] Affidavits/declaration(s)
- [ ] Extension of Time Request
- [ ] Express Abandonment Request
- [ ] Information Disclosure Statement
- [ ] Certified Copy of Priority Document(s)
- [ ] Reply to Missing Parts/ Incomplete Application
  - [ ] Reply to Missing Parts under 37 CFR 1.52 or 1.53
- [ ] Drawing(s)
- [ ] Licensing-related Papers
- [ ] Petition
- [ ] Petition to Convert to a Provisional Application
- [ ] Power of Attorney, Revocation Change of Correspondence Address
- [ ] Terminal Disclaimer
- [ ] Request for Refund
- [ ] CD, Number of CD(s) _____
  - [ ] Landscape Table on CD
- [ ] After Allowance communication to TC
- [ ] Appeal Communication to Board of Appeals and Interferences
- [ ] Appeal Communication to TC **(Appeal Notice, Brief, Reply Brief)**
- [ ] Proprietary Information
- [ ] Status Letter
- [X] Other Enclosure(s) (please identify below):

Executed Declaration; Application Data Sheet.

Remarks

SIGNATURE OF APPLICANT, ATTORNEY, OR AGENT

Firm Name	Merle W. Richman, Cust ID - 26338		
Signature	/mwresq/		
Printed name	Merle Richman		
Date	March 25, 2013	Reg. No.	38282

CERTIFICATE OF TRANSMISSION/MAILING

I hereby certify that this correspondence is being facsimile transmitted to the USPTO or deposited with the United States Postal Service with sufficient postage as first class mail in an envelope addressed to: Commissioner for Patents, P.O. Box 1450, Alexandria, VA 22313-1450 on the date shown below.

Signature	/mwresq/		
Typed or printed name	Merle Richman	Date	March 25, 2013

This collection of information is required by 37 CFR 1.5. The information is required to obtain or retain a benefit by the public which is to file (and by the USPTO to process) an application. Confidentiality is governed by 35 U.S.C. 122 and 37 CFR 1.11 and 1.14. This collection is estimated to take 2 hours to complete, including gathering, preparing, and submitting the completed application form to the USPTO. Time will vary depending upon the individual case. Any comments on the amount of time you require to complete this form and/or suggestions for reducing this burden, should be sent to the Chief Information Officer, U.S. Patent and Trademark Office, U.S. Department of Commerce, P.O. Box 1450, Alexandria, VA 22313-1450. DO NOT SEND FEES OR COMPLETED FORMS TO THIS ADDRESS. **SEND TO: Commissioner for Patents, P.O. Box 1450, Alexandria, VA 22313-1450.**

In you need assistance in completing the form, call 1-800-PTO-9199 and select option 2

Electronic Acknowledgement Receipt

EFS ID:	15350277
Application Number:	13825083
International Application Number:	
Confirmation Number:	9850
Title of Invention:	METHOD, SYSTEM, AND APPARATUS FOR DERMALOGICAL TREATMENT
First Named Inventor/Applicant Name:	Jongju Na
Customer Number:	26338
Filer:	Merle W. Richman
Filer Authorized By:	
Attorney Docket Number:	NA001KR_PCTUS
Receipt Date:	26-MAR-2013
Filing Date:	
Time Stamp:	00:49:18
Application Type:	U.S. National Stage under 35 USC 371

Payment information:

Submitted with Payment	no

File Listing:

Document Number	Document Description	File Name	File Size(Bytes)/ Message Digest	Multi Part /.zip	Pages (if appl.)
1	Oath or Declaration filed	na001KR_US-declaration.pdf	394600 5ab7c08740812ffb00fb5b48e116c3323f93c9b9	no	1

Warnings:

Information:

2	Application Data Sheet	na001KR_US-ads.pdf	1432321 d866d85b70c12fcebf291f7e76f333bbeb308d69	no	6
Warnings:					
Information:					
3	Transmittal Letter	na001KR_US-transmittal.pdf	100632 8f81624a962dae1199348c744b6733bcc51c514f	no	1
Warnings:					
Information:					
			Total Files Size (in bytes):	1927553	

This Acknowledgement Receipt evidences receipt on the noted date by the USPTO of the indicated documents, characterized by the applicant, and including page counts, where applicable. It serves as evidence of receipt similar to a Post Card, as described in MPEP 503.

<u>New Applications Under 35 U.S.C. 111</u>
If a new application is being filed and the application includes the necessary components for a filing date (see 37 CFR 1.53(b)-(d) and MPEP 506), a Filing Receipt (37 CFR 1.54) will be issued in due course and the date shown on this Acknowledgement Receipt will establish the filing date of the application.

<u>National Stage of an International Application under 35 U.S.C. 371</u>
If a timely submission to enter the national stage of an international application is compliant with the conditions of 35 U.S.C. 371 and other applicable requirements a Form PCT/DO/EO/903 indicating acceptance of the application as a national stage submission under 35 U.S.C. 371 will be issued in addition to the Filing Receipt, in due course.

<u>New International Application Filed with the USPTO as a Receiving Office</u>
If a new international application is being filed and the international application includes the necessary components for an international filing date (see PCT Article 11 and MPEP 1810), a Notification of the International Application Number and of the International Filing Date (Form PCT/RO/105) will be issued in due course, subject to prescriptions concerning national security, and the date shown on this Acknowledgement Receipt will establish the international filing date of the application.

SCORE Placeholder Sheet for IFW Content

Application Number: 13825083 Document Date: 03/19/2013

The presence of this form in the IFW record indicates that the following document type was received in electronic format on the date identified above. This content is stored in the SCORE database.

- Drawings – Other than Black and White Line Drawings

Since this was an electronic submission, there is no physical artifact folder, no artifact folder is recorded in PALM, and no paper documents or physical media exist. The TIFF images in the IFW record were created from the original documents that are stored in SCORE.

To access the documents in the SCORE database, refer to instructions developed by SIRA.

At the time of document entry (noted above):

- Examiners may access SCORE content via the eDAN interface.
- Other USPTO employees can bookmark the current SCORE URL (http://es/ScoreAccessWeb/).
- External customers may access SCORE content via the Public and Private PAIR interfaces.

Form Revision Date: February 8, 2006

IN THE UNITED STATES PATENT AND TRADEMARK OFFICE

Applicant(s): Na	
Application No.: 13825083	Art Unit:
Filed: 3/19/2013	Examiner:
Title: METHOD, SYSTEM, AND APPARATUS FOR DERMALOGICAL TREATMENT	
Attorney Docket No.: NA001KR_PCTUS	

SUPPLEMENTAL PRELIMINARY AMENDMENT UNDER 37 CFR 1.115

Commissioner for Patents
P.O. Box 1450
Alexandria, VA 22313-1450

Dear Sir:

Please further amend this application as follows:

In the Title:

METHOD, SYSTEM, AND APPARATUS FOR ~~DERMALOGICAL~~ DERMATOLOGICAL TREATMENT

In the claims:

1. (Currently Amended) A method of treating ~~dermalogical~~ dermatological tissue, comprising:

placing a user holdable device including a proximal end and a distal end, the distal end including a plurality of extendable needles from a device distal end surface on or near ~~dermalogical~~ dermatological tissue to be treated;

energizing a motor coupled to the extendable needles to cause a plurality of the extendable needles to extend a desired distance from the distal end surface; and

energizing the plurality of the extendable needles via a signal generator electrically coupled to the plurality of the extendable needles.

2. (Currently Amended) The method of claim 1, further comprising placing a ~~dermalogical~~ dermatological chemical one of on at least a portion of the ~~dermalogical~~ dermatological tissue, at least a portion of the end surface, and the plurality of the extendable needles.

3. (Currently Amended) The method of claim 1, wherein the device further includes ~~a proximal handle and~~ a releasably couplable deployable needle assembly, the deployable needle assembly mechanically separatably from the proximal ~~handle~~ end, and the extendable needles located in the needle assembly.

4. (Currently Amended) The method of claim 3, wherein the proximal ~~handle~~ end includes the needle deploying motor, the motor including a draft shaft releasably couplable to the deployable needle assembly.

5. (Currently Amended) The method of claim 4 3, wherein the proximal ~~handle~~ end further includes at least one embedded LED therein and further including energizing the LED when the signal generator is energized, the at least one embedded LED illuminating the deployable needle assembly when energized.

6. (Currently Amended) The method of claim ~~5~~ 3, wherein one of the proximal ~~handle~~ end and the deployable needle assembly includes ~~a plurality of~~ at least one electrical ~~conductors~~ conductor and ~~the deployable needle assembly~~ the other includes ~~a plurality of~~ at least one restorably deflectable electrical ~~contacts~~ contact couplable to the one of the proximal ~~handle~~ end ~~plurality of~~ and the deployable needle assembly at least one electrical ~~conductors~~ conductor and communicating electrical signals from the proximal ~~handle~~ end ~~plurality of electrical conductors~~ to the plurality of the extendable needles.

7. (Currently Amended) The method of claim 6, wherein ~~each of~~ the ~~plurality of~~ at least one restorably deflectable electrical ~~contacts~~ contact includes a depressible pin.

8. (Previously Presented) The method of claim 5, wherein the releasably couplable deployable needle assembly includes a translucent section to communicate illumination from the least one embedded LED to the plurality of extendable needles.

9. (Previously Presented) The method of claim 6, wherein a first deflectable electrical contact is coupled to a first plurality of the plurality of extendable needles and a second deflectable electrical contact is coupled to a second, different plurality of the plurality of extendable needles.

10. (Currently Amended) The method of claim 3, further comprising employing the signal generator to energize the plurality of the extendable needles with energy to one of cut, blend, or coagulate ~~dermalogical~~ dermatological tissue.

11. (Currently Amended) An apparatus for treating ~~dermalogical~~ dermatological tissue, comprising:

a user holdable device including a proximal end and a distal end, the distal end including a plurality of extendable needles, a plurality of the extendable needles extendable from the device distal end surface;

a motor coupled to the plurality of the extendable needles that causes the plurality of the extendable needles to extend a desired distance from the distal end surface when the motor is energized with a particular signal; and

a signal generator electrically coupled to the plurality of the extendable needles to energize the plurality of the extendable needles.

12. (Previously Presented) The apparatus of claim 11, wherein the device proximal end includes an electrical connector couplable to the signal generator.

13. (Currently Amended) The apparatus of claim 11, wherein the device further includes ~~a proximal handle and~~ a releasably couplable deployable needle assembly, the deployable needle assembly mechanically separatably from the proximal ~~handle~~ end, and the extendable needles located in the needle assembly.

14. (Currently Amended) The apparatus of claim 13, wherein the proximal ~~handle~~ end includes the needle deploying motor, the motor including a draft shaft releasably couplable to the deployable needle assembly.

15. (Currently Amended) The apparatus of claim ~~14~~ 13, wherein the proximal ~~handle~~ end further includes at least one embedded LED therein and the apparatus further including a photonic signal generator electrically coupled to the least one embedded LED, the at least one embedded LED illuminating the deployable needle assembly when energized.

16. (Currently Amended) The apparatus of claim ~~15~~ 13, wherein one of the proximal ~~handle~~ end and the deployable needle assembly includes ~~a plurality of~~ at least one electrical ~~conductors~~ conductor and ~~the deployable needle assembly~~ the other includes ~~a plurality of~~ at least one restorably deflectable electrical ~~contacts~~ contact couplable to the one of the proximal ~~handle~~ end ~~plurality of~~ and the deployable needle assembly at least one electrical ~~conductors~~ conductor and communicating electrical signals from the proximal ~~handle~~ end ~~plurality of electrical conductors~~ to the plurality of the extendable needles.

17. (Currently Amended) The apparatus of claim 16, ~~each of~~ the ~~plurality of~~ wherein at least one restorably deflectable electrical ~~contacts~~ contact includes a depressible pin.

18. (Previously Presented) The apparatus of claim 15, wherein the releasably couplable deployable needle assembly includes a translucent section that communicates illumination from the least one embedded LED to the plurality of extendable needles.

19. (Previously Presented) The apparatus of claim 16, wherein a first deflectable electrical contact is coupled to a first plurality of the plurality of extendable needles and a second deflectable electrical contact is coupled to a second, different plurality of the plurality of extendable needles.

20. (Currently Amended) The apparatus of claim 13, wherein the signal generator energizes the plurality of the extendable needles with energy to one of cut, blend, or coagulate ~~dermalogical~~ dermatological tissue.

21. (Newly Added) The apparatus of claim 13, further comprising the motor deploying the plurality of extendable needles to a predetermined depth and the signal generator energizing the plurality of extendable needles to a predetermined intensity for a predetermined duty cycle.

22. (Newly Added) The apparatus of claim 13, further comprising the signal generator energizing a first plurality of the extendable needles to cause vibration of a second plurality of extendable needles, the first plurality being greater than or equal to the second plurality.

23. (Newly Added) The method of claim 3, further comprising deploying the plurality of extendable needles to a predetermined depth and employing the signal generator to energize the plurality of extendable needles to a predetermined intensity for a predetermined duty cycle.

24. (Newly Added) The method of claim 3, further comprising employing the signal generator to energize a first plurality of the extendable needles to cause vibration of a second plurality of extendable needles, the first plurality being greater than or equal to the second plurality.

REMARKS

Claims 1-20 were pending after the first, preliminary amendment. Claims 1-7, 10-17, and 20 have been amended and claims 21-24 have been added in this supplemental amendment. Upon entry of this supplemental amendment, claims 1-24 will be pending. Entry of this supplemental preliminary amendment is respectfully requested. No new matter has been added. Reconsideration and further examination is respectfully requested.

Applicants have made a diligent effort to place the claims in condition for allowance. However, should there remain unresolved issues that require adverse action, it is respectfully requested that the Examiner telephone Merle Richman, Applicants' Attorney at 858 320-2030 so that such issues may be resolved as expeditiously as possible.

For these reasons, and in view of the above amendments, this application is now considered to be in condition for allowance and such action is earnestly solicited.

Respectfully Submitted,

4/23/2013_____
Date

/mwresq/_____
Merle Richman
Patent Attorney
Reg. No. 38282

Merle Richman
Patent Attorney
Customer ID - 26338
PO Box 3333
La Jolla, CA 92038-3333

Tel. 858 320-2030

Doc Code: TRAN.LET
Document Description: Transmittal Letter

PTO/SB/21 (07-09)
Approved for use through 07/31/2012. OMB 0651-0031
U.S. Patent and Trademark Office; U.S. DEPARTMENT OF COMMERCE
Under the Paper Reduction Act of 1995, no persons are required to respond to a collection of information unless it displays a valid OMB control number.

TRANSMITTAL FORM *(to be used for all correspondence after initial filing)*		Application Number	13825083
		Filing Date	Mar 19, 2013
		First Named Inventor	Na, Jongju
		Art Unit	
		Examiner Name	
Total Number of Pages in This Submission		Attorney Docket Number	NA001KR_PCTUS

ENCLOSURES ***(Check all that apply)***

- [ ] Fee Transmittal Form
  - [ ] Fee Attached
- [ ] Amendment / Reply
  - [ ] After Final
  - [ ] Affidavits/declaration(s)
- [ ] Extension of Time Request
- [ ] Express Abandonment Request
- [ ] Information Disclosure Statement
- [ ] Certified Copy of Priority Document(s)
- [ ] Reply to Missing Parts/ Incomplete Application
  - [ ] Reply to Missing Parts under 37 CFR 1.52 or 1.53
- [ ] Drawing(s)
- [ ] Licensing-related Papers
- [ ] Petition
- [ ] Petition to Convert to a Provisional Application
- [ ] Power of Attorney, Revocation Change of Correspondence Address
- [ ] Terminal Disclaimer
- [ ] Request for Refund
- [ ] CD, Number of CD(s) _____
  - [ ] Landscape Table on CD
- [ ] After Allowance communication to TC
- [ ] Appeal Communication to Board of Appeals and Interferences
- [ ] Appeal Communication to TC **(Appeal Notice, Brief, Reply Brief)**
- [ ] Proprietary Information
- [ ] Status Letter
- [X] Other Enclosure(s) (please identify below):

Supplemental Amendment (7 pages)

Remarks

SIGNATURE OF APPLICANT, ATTORNEY, OR AGENT

Firm Name	Merle W. Richman, Cust ID - 26338		
Signature	/mwresq/		
Printed name	Merle Richman		
Date	April 23, 2013	Reg. No.	38282

CERTIFICATE OF TRANSMISSION/MAILING

I hereby certify that this correspondence is being electronically transmitted to the USPTO or deposited with the United States Postal Service with sufficient postage as first class mail in an envelope addressed to: Commissioner for Patents, P.O. Box 1450, Alexandria, VA 22313-1450 on the date shown below.

Signature	/mwresq/		
Typed or printed name	Merle Richman	Date	April 23, 2013

This collection of information is required by 37 CFR 1.5. The information is required to obtain or retain a benefit by the public which is to file (and by the USPTO to process) an application. Confidentiality is governed by 35 U.S.C. 122 and 37 CFR 1.11 and 1.14. This collection is estimated to take 2 hours to complete, including gathering, preparing, and submitting the completed application form to the USPTO. Time will vary depending upon the individual case. Any comments on the amount of time you require to complete this form and/or suggestions for reducing this burden, should be sent to the Chief Information Officer, U.S. Patent and Trademark Office, U.S. Department of Commerce, P.O. Box 1450, Alexandria, VA 22313-1450. DO NOT SEND FEES OR COMPLETED FORMS TO THIS ADDRESS. **SEND TO: Commissioner for Patents, P.O. Box 1450, Alexandria, VA 22313-1450.**

In you need assistance in completing the form, call 1-800-PTO-9199 and select option 2.

Electronic Acknowledgement Receipt

EFS ID:	15595129
Application Number:	13825083
International Application Number:	
Confirmation Number:	9850
Title of Invention:	METHOD, SYSTEM, AND APPARATUS FOR DERMALOGICAL TREATMENT
First Named Inventor/Applicant Name:	Jongju Na
Customer Number:	26338
Filer:	Merle W. Richman
Filer Authorized By:	
Attorney Docket Number:	NA001KR_PCTUS
Receipt Date:	23-APR-2013
Filing Date:	
Time Stamp:	19:02:43
Application Type:	U.S. National Stage under 35 USC 371

Payment information:

Submitted with Payment	no

File Listing:

Document Number	Document Description	File Name	File Size(Bytes)/ Message Digest	Multi Part /.zip	Pages (if appl.)
1	Supplemental Response or Supplemental Amendment	na001us-supplemental-preliminary-amendment.pdf	71990 79defc4c2972e58164c3fb39603fb17a97a72f9a	no	7

Warnings:

Information:

2	Transmittal Letter	na001us-supplemental-preliminary-amendment-transmittal.pdf	102147 19a12872eb718f28eb34d092cbbb8193959247f7	no	1
Warnings:					
Information:					
			Total Files Size (in bytes):	174137	

This Acknowledgement Receipt evidences receipt on the noted date by the USPTO of the indicated documents, characterized by the applicant, and including page counts, where applicable. It serves as evidence of receipt similar to a Post Card, as described in MPEP 503.

<u>New Applications Under 35 U.S.C. 111</u>
If a new application is being filed and the application includes the necessary components for a filing date (see 37 CFR 1.53(b)-(d) and MPEP 506), a Filing Receipt (37 CFR 1.54) will be issued in due course and the date shown on this Acknowledgement Receipt will establish the filing date of the application.

<u>National Stage of an International Application under 35 U.S.C. 371</u>
If a timely submission to enter the national stage of an international application is compliant with the conditions of 35 U.S.C. 371 and other applicable requirements a Form PCT/DO/EO/903 indicating acceptance of the application as a national stage submission under 35 U.S.C. 371 will be issued in addition to the Filing Receipt, in due course.

<u>New International Application Filed with the USPTO as a Receiving Office</u>
If a new international application is being filed and the international application includes the necessary components for an international filing date (see PCT Article 11 and MPEP 1810), a Notification of the International Application Number and of the International Filing Date (Form PCT/RO/105) will be issued in due course, subject to prescriptions concerning national security, and the date shown on this Acknowledgement Receipt will establish the international filing date of the application.

UNITED STATES PATENT AND TRADEMARK OFFICE

UNITED STATES DEPARTMENT OF COMMERCE
United States Patent and Trademark Office
Address: COMMISSIONER FOR PATENTS
P.O. Box 1450
Alexandria, Virginia 22313-1450
www.uspto.gov

U.S. APPLICATION NUMBER NO.	FIRST NAMED APPLICANT	ATTY. DOCKET NO.
13/825,083	Jongju Na	NA001KR_PCTUS

26338
MERLE W. RICHMAN, III
P.O. BOX 3333
LA JOLLA, CA 92038

INTERNATIONAL APPLICATION NO.	
PCT/KR2012/001335	
I.A. FILING DATE	PRIORITY DATE
02/22/2012	03/03/2011

CONFIRMATION NO. 9850
371
ABANDONMENT/TERMINATION LETTER

OC000000064209945

Date Mailed: 10/04/2013

NOTIFICATION OF ABANDONMENT

The United States Patent and Trademark Office in its capacity as a Designated / Elected Office (37 CFR 1.495) has made the following determination:

- Applicant has failed to provide the full U.S. Basic National Fee by 30 months (37 CFR 1.495(b)(2)).

Therefore, the above identified application failed to meet the requirements of 35 U.S.C. 371 and 37 CFR 1.495,and is ABANDONED AS TO THE UNITED STATES OF AMERICA.

INDIA L EVANS

Telephone: (571) 272-9085

FORM PCT/DO/EO/909 (371 Abandonment Notice)

PTO/SB/64 (03-13)
Approved for use through 03/31/2013. OMB 0651-0031
U.S. Patent and Trademark Office; U.S. DEPARTMENT OF COMMERCE
Under the Paperwork Reduction Act of 1995, no persons are required to respond to a collection of information unless it displays a valid OMB control number.

PETITION FOR REVIVAL OF AN APPLICATION FOR PATENT ABANDONED UNINTENTIONALLY UNDER 37 CFR 1.137(b)

Docket Number (Optional) NA001KR_PCTUS

First named inventor: Na, Jong ju

Application No.: 13825083 Art Unit: 3769

Filed: 3/19/2013 Examiner: Victor Shapiro

Title: METHOD, SYSTEM, AND APPARATUS FOR DERMALOGICAL TREATMENT

Attention: Office of Petitions
Mail Stop Petition
Commissioner for Patents
P.O. Box 1450
Alexandria, VA 22313-1450
FAX: (571) 273-8300

NOTE: If information or assistance is needed in completing this form, please contact the Office of Petitions at (571) 272-3282.

The above-identified application became abandoned for failure to file a timely and proper reply to a notice or action by the United States Patent and Trademark Office. The date of abandonment is the day after the expiration date of the period set for reply in the office notice or action plus any extensions of time actually obtained.

APPLICANT HEREBY PETITIONS FOR REVIVAL OF THIS APPLICATION.

NOTE: A grantable petition requires the following items:
(1) Petition fee;
(2) Reply and/or issue fee;
(3) Terminal disclaimer with disclaimer fee -- required for all utility and plant applications filed before June 8, 1995, and for all design applications; and
(4) Statement that the entire delay was unintentional.

1. **Petition fee**

[X] Small entity-fee $ 950.00 (37 CFR 1.17(m)). Applicant asserts small entity status. See 37 CFR 1.27.

[ ] Micro entity fee $ _____. (37 CFR 1.17(m)). Applicant certifies micro entity status. See 37 CFR 1.29. Form PTO/SB/15A or B or equivalent must either be enclosed or have been submitted previously.

[ ] Undiscounted fee $ _____ (37 CFR 1.17(m)).

2. **Reply and/or fee**

A. The reply and/or fee to the above-noted Office notice or action in the form of _____ (identify the type of reply):

[ ] has been filed previously on _____.

[X] is enclosed herewith.

B. The issue fee and publication fee (if applicable) of $ _____.

[ ] has been paid previously on _____.

[ ] is enclosed herewith.

This collection of information is required by 37 CFR 1.137(b). The information is required to obtain or retain a benefit by the public which is to file (and by the USPTO to process) an application. Confidentiality is governed by 35 U.S.C. 122 and 37 CFR 1.11 and 1.14 and 41.6. This collection is estimated to take 1 hour to complete, including gathering, preparing, and submitting the completed application form to the USPTO. Time will vary depending upon the individual case. Any comments on the amount of time you require to complete this form and/or suggestions for reducing this burden, should be sent to the Chief Information Officer, U.S. Patent and Trademark Office, U.S. Department of Commerce, P.O. 1450, Alexandria, VA 22313-1450. DO NOT SEND FEES OR COMPLETED FORMS TO THIS ADDRESS. **SEND TO: Mail Stop Petition, Commissioner for Patents, P.O. Box 1450, Alexandria, VA 22313-1450.**

If you need assistance in completing the form, call 1-800-PTO-9199 and select option 2.

PTO/SB/64 (03-13)
Approved for use through 03/31/2013. OMB 0651-0031
Patent and Trademark Office; U.S. DEPARTMENT OF COMMERCE
Under the Paperwork Reduction Act of 1995, no persons are required to respond to a collection of information unless it displays a valid OMB control number.

PETITION FOR REVIVAL OF AN APPLICATION FOR PATENT ABANDONED UNINTENTIONALLY UNDER 37 CFR 1.137(b)

3. **Terminal disclaimer with disclaimer fee**

[X] Since this utility/plant application was filed on or after June 8, 1995, no terminal disclaimer is required.

[ ] A terminal disclaimer (and disclaimer fee (37 CFR 1.20(d)) of $_____ disclaiming the required period of time is enclosed herewith (see PTO/SB/63).

4. **STATEMENT:** The entire delay in filing the required reply from the due date for the required reply until the filing of a grantable petition under 37 CFR 1.137(b) was unintentional. [NOTE: The United States Patent and Trademark Office may require additional information if there is a question as to whether either the abandonment or the delay in filing a petition under 37 CFR 1.137(b) was unintentional (MPEP 711.03(c), subsections (III)(C) and (D)).]

WARNING:

Petitioner/applicant is cautioned to avoid submitting personal information in documents filed in a patent application that may contribute to identity theft. Personal information such as social security numbers, bank account numbers, or credit card numbers (other than a check or credit card authorization form PTO-2038 submitted for payment purposes) is never required by the USPTO to support a petition or an application. If this type of personal information is included in documents submitted to the USPTO, petitioners/applicants should consider redacting such personal information from the documents before submitting them to the USPTO. Petitioner/applicant is advised that the record of a patent application is available to the public after publication of the application (unless a non-publication request in compliance with 37 CFR 1.213(a) is made in the application) or issuance of a patent. Furthermore, the record from an abandoned application may also be available to the public if the application is referenced in a published application or an issued patent (see 37 CFR 1.14). Checks and credit card authorization forms PTO-2038 submitted for payment purposes are not retained in the application file and therefore are not publicly available.

/mwresq/	October 14, 2013
Signature	Date
Merle Richman	38282
Typed or Printed Name	Registration Number, if applicable
Customer ID - 26338, PO Box 3333	858 320-2030
Address	Telephone Number
La Jolla, CA 92038-3333	
Address	

Enclosures:

[X] Fee Payment

[ ] Reply

[ ] Terminal Disclaimer Form

[ ] Additional sheet(s) containing statements establishing unintentional delay

[ ] Other: _____

CERTIFICATE OF MAILING OR TRANSMISSION [37 CFR 1.8(a)]

I hereby certify that this correspondence is being:

[ ] Deposited with the United States Postal Service on the date shown below with sufficient postage as first class mail in an envelope addressed to: Mail Stop Petition, Commissioner for Patents, P.O. Box 1450, Alexandria, VA 22313-1450.

[X] Transmitted electronically on the date shown below to the United States Patent and Trademark Office at (571) 273-8300.

October 14, 2013	/mwresq/
Date	Signature
	Merle Richman
	Typed or printed name of person signing certificate

Electronic Patent Application Fee Transmittal

Application Number:	13825083
Filing Date:	
Title of Invention:	METHOD, SYSTEM, AND APPARATUS FOR DERMALOGICAL TREATMENT
First Named Inventor/Applicant Name:	Jongju Na
Filer:	Merle W. Richman
Attorney Docket Number:	NA001KR_PCTUS

Filed as Small Entity

U.S. National Stage under 35 USC 371 Filing Fees

Description	Fee Code	Quantity	Amount	Sub-Total in USD($)
Basic Filing:				
Basic National Stage Fee	2631	1	140	140
Natl Stage Search Fee - Report provided	2642	1	240	240
Natl Stage Exam Fee - all other cases	2633	1	360	360
Pages:				
Claims:				
Miscellaneous-Filing:				
Petition:				
Petition-Revive Unintent. Abandoned Appl	2453	1	950	950

Description	Fee Code	Quantity	Amount	Sub-Total in USD($)
Patent-Appeals-and-Interference:				
Post-Allowance-and-Post-Issuance:				
Extension-of-Time:				
Miscellaneous:				
			Total in USD ($)	**1690**

Electronic Acknowledgement Receipt

EFS ID:	17121847
Application Number:	13825083
International Application Number:	
Confirmation Number:	9850
Title of Invention:	METHOD, SYSTEM, AND APPARATUS FOR DERMALOGICAL TREATMENT
First Named Inventor/Applicant Name:	Jongju Na
Customer Number:	26338
Filer:	Merle W. Richman
Filer Authorized By:	
Attorney Docket Number:	NA001KR_PCTUS
Receipt Date:	14-OCT-2013
Filing Date:	
Time Stamp:	18:33:10
Application Type:	U.S. National Stage under 35 USC 371

Payment information:

Submitted with Payment	yes
Payment Type	Credit Card
Payment was successfully received in RAM	$1690
RAM confirmation Number	15577
Deposit Account	
Authorized User	

File Listing:

Document Number	Document Description	File Name	File Size(Bytes)/ Message Digest	Multi Part /.zip	Pages (if appl.)

1	Petition for review by the Office of Petitions.	na001us1-petition-to-revive.pdf	90377 9a3945c88e4a13a5fa85aeacd1d2de17948616c9	no	2
Warnings:					
Information:					
2	Fee Worksheet (SB06)	fee-info.pdf	37386 fb040a50b180f821395be480fc4ecaf6fcd25821	no	2
Warnings:					
Information:					
			Total Files Size (in bytes):	127763	

This Acknowledgement Receipt evidences receipt on the noted date by the USPTO of the indicated documents, characterized by the applicant, and including page counts, where applicable. It serves as evidence of receipt similar to a Post Card, as described in MPEP 503.

<u>New Applications Under 35 U.S.C. 111</u>
If a new application is being filed and the application includes the necessary components for a filing date (see 37 CFR 1.53(b)-(d) and MPEP 506), a Filing Receipt (37 CFR 1.54) will be issued in due course and the date shown on this Acknowledgement Receipt will establish the filing date of the application.

<u>National Stage of an International Application under 35 U.S.C. 371</u>
If a timely submission to enter the national stage of an international application is compliant with the conditions of 35 U.S.C. 371 and other applicable requirements a Form PCT/DO/EO/903 indicating acceptance of the application as a national stage submission under 35 U.S.C. 371 will be issued in addition to the Filing Receipt, in due course.

<u>New International Application Filed with the USPTO as a Receiving Office</u>
If a new international application is being filed and the international application includes the necessary components for an international filing date (see PCT Article 11 and MPEP 1810), a Notification of the International Application Number and of the International Filing Date (Form PCT/RO/105) will be issued in due course, subject to prescriptions concerning national security, and the date shown on this Acknowledgement Receipt will establish the international filing date of the application.

UNITED STATES PATENT AND TRADEMARK OFFICE

Commissioner for Patents
United States Patent and Trademark Office
P.O. Box 1450
Alexandria, VA 22313-1450
www.uspto.gov

MAILED

NOV 29 2013

PCT LEGAL ADMINISTRATION

MERLE W. RICHMAN, III
P.O. BOX 3333
LA JOLLA CA 92038

In re Application of NA et al. Application No.: 13/825,083 PCT No.: PCT/KR12/01335 Int. Filing Date: 22 February 2012 Priority Date: 03 March 2011 Attorney Docket No.: NA001KR_PCTUS For: METHOD, SYSTEM AND APPARATUS FOR DERMALOGICAL TREATMENT	DECISION ON PETITION TO REVIVE UNDER 37 CFR 1.137(b)

The petition to revive under 37 CFR 1.137(b) filed 14 October 2013 in the above captioned application is hereby **GRANTED** as follows:

Applicants' statement that "the entire delay in filing the required reply from the due date for the reply until the filing of this petition under 37 CFR 1.137(b) was unintentional" meets the requirements of 37 CFR 1.137(b)(3).

Applicant paid the petition fee of $950 and the basic national fee. The request to revive the application abandoned under 35 U.S.C. 371(d) is granted as to the National stage in the United States of America.

This application is being referred to the National Stage Processing Branch of the Office of PCT Operations for further processing, including a Notification of Missing Requirements indicating that an oath or declaration, in compliance with 37 CFR 1.467(a)-(b), is required. [1]

---

[1] Applicant submitted a declaration (Form PTO/AIA/01) in an attempt to fulfill the requirements of 35 U.S.C. 371(c)(4). The USPTO website regarding Patent Forms indicates that "For applications entering the national stage under 35 U.S.C. 371, the international filing date of the international application is used to determine which forms should be used." Here, the international filing date 22 February 2012 is the filing date for the application at issue U.S. application. The American Inventors Act (AIA) does not apply to applications filed prior to 16 September 2012. Thus, the use of the Form PTO/AIA/01 does not meet the requirements under 37 CFR 1.497(a) and (b), which apply to this application.

Pursuant to 37 CFR 1.497(a), the declaration must indicate the citizenship for the inventor. The declaration submitted on 26 March 2013 does not identify the inventor's citizenship. It is inappropriate, at this time, to accord the application status under 37 CFR 1.497(a)-(b).

The newly executed declaration is required that is in compliance with 37 CFR 1.497(a) and (b). Applicant may wish to employ USPTO Form PTO/SB/01.

/Cynthia M. Kratz/

Cynthia M. Kratz
Attorney Advisor
PCT Legal Office
Office of PCT Legal Administration
Telephone: (571) 272-3286

UNITED STATES PATENT AND TRADEMARK OFFICE

UNITED STATES DEPARTMENT OF COMMERCE
United States Patent and Trademark Office
Address: COMMISSIONER FOR PATENTS
P.O. Box 1450
Alexandria, Virginia 22313-1450
www.uspto.gov

U.S. APPLICATION NUMBER NO.	FIRST NAMED APPLICANT	ATTY. DOCKET NO.
13/825,083	Jongju Na	NA001KR_PCTUS

26338
MERLE W. RICHMAN, III
P.O. BOX 3333
LA JOLLA, CA 92038

INTERNATIONAL APPLICATION NO.	
PCT/KR2012/001335	
I.A. FILING DATE	PRIORITY DATE
02/22/2012	03/03/2011

CONFIRMATION NO. 9850
371 FORMALITIES LETTER

OC000000065424895

Date Mailed: 12/06/2013

NOTIFICATION OF MISSING REQUIREMENTS UNDER 35 U.S.C. 371 IN THE UNITED STATES DESIGNATED/ELECTED OFFICE (DO/EO/US)

The following items have been submitted by the applicant or the IB to the United States Patent and Trademark Office as a Designated Office (37 CFR 1.495).

- Indication of Small Entity Status
- Priority Document
- Copy of the International Application filed on 03/19/2013
- English Translation of the IA filed on 10/14/2013
- Copy of the International Search Report filed on 03/19/2013
- Preliminary Amendments filed on 03/19/2013
- Inventor's Oath or Declaration filed on 03/26/2013
- Request for Immediate Examination filed on 03/19/2013
- U.S. Basic National Fees filed on 10/14/2013
- Priority Documents filed on 03/19/2013
- Application Data Sheet (37 CFR 1.76) filed on 03/26/2013

The applicant needs to satisfy supplemental fees problems indicated below.

The following items **MUST** be furnished within the period set forth below in order to complete the requirements for acceptance under 35 U.S.C. 371:

- Processing fee of $70 for providing the translation of the application and/or the Annexes later than 30 months from the priority date (37 CFR 1.492(i)).
- Oath or declaration of the inventors, in compliance with 37 CFR 1.497(a) and (b), identifying the application by the International application number and international filing date. The current oath or declaration does not comply with 37 CFR 1.497(a) and (b) in that it:
  - does not identify the citizenship of each inventor.
- To avoid abandonment, a surcharge (for late submission of filing fee, search fee, examination fee or oath or declaration) as set forth in 37 CFR 1.492(h) of $70 for a small entity in compliance with 37 CFR 1.27 , must be submitted with the missing items identified in this letter.

SUMMARY OF FEES DUE:

Total additional fees required for this application is $**140** for a Small Entity:
- $**70** Surcharge.
- $**70** for English translation surcharge required.

FORM PCT/DO/EO/905 (371 Formalities Notice)

ALL OF THE ITEMS SET FORTH ABOVE MUST BE SUBMITTED WITHIN TWO (2) MONTHS FROM THE DATE OF THIS NOTICE OR BY 32 MONTHS FROM THE PRIORITY DATE FOR THE APPLICATION, WHICHEVER IS LATER. FAILURE TO PROPERLY RESPOND WILL RESULT IN ABANDONMENT.

The time period set above may be extended by filing a petition and fee for extension of time under the provisions of 37 CFR 1.136(a).

Applicant is reminded that any communications to the United States Patent and Trademark Office must be mailed to the address given in the heading and include the U.S. application no. shown above (37 CFR 1.5)

Registered users of EFS-Web may alternatively submit their reply to this notice via EFS-Web. https://sportal.uspto.gov/authenticate/AuthenticateUserLocalEPF.html

For more information about EFS-Web please call the USPTO Electronic Business Center at **1-866-217-9197** or visit our website at http://www.uspto.gov/ebc.

If you are not using EFS-Web to submit your reply, you must include a copy of this notice.

INDIA L EVANS

Telephone: (571) 272-9085

FORM PCT/DO/EO/905 (371 Formalities Notice)

UNITED STATES PATENT AND TRADEMARK OFFICE

UNITED STATES DEPARTMENT OF COMMERCE
United States Patent and Trademark Office
Address: COMMISSIONER FOR PATENTS
P.O. Box 1450
Alexandria, Virginia 22313-1450
www.uspto.gov

APPLICATION NUMBER	FILING OR 371(C) DATE	FIRST NAMED APPLICANT	ATTY. DOCKET NO./TITLE
13/825,083		Jongju Na	NA001KR_PCTUS

CONFIRMATION NO. 9850

26338
MERLE W. RICHMAN, III
P.O. BOX 3333
LA JOLLA, CA 92038

WITHDRAWAL NOTICE

OC000000065411603

Date Mailed: 12/06/2013

Letter Regarding a New Notice and/or the Status of the Application

If a new notice or Filing Receipt is enclosed, applicant may disregard the previous notice mailed on 10/04/2013. The time period for reply runs from the mail date of the new notice. Within the time period for reply, applicant is required to file a reply in compliance with the requirements set forth in the new notice to avoid abandonment of the application.

Registered users of EFS-Web may alternatively submit their reply to this notice via EFS-Web. https://sportal.uspto.gov/authenticate/AuthenticateUserLocalEPF.html

For more information about EFS-Web please call the USPTO Electronic Business Center at **1-866-217-9197** or visit our website at http://www.uspto.gov/ebc.

If the reply is not filed electronically via EFS-Web, the reply must be accompanied by a copy of the new notice.

If the Office previously granted a petition to withdraw the holding of abandonment or a petition to revive under 37 CFR 1.137, the status of the application has been returned to pending status.

/frios/

Office of Data Management, Application Assistance Unit (571) 272-4000, or (571) 272-4200, or 1-888-786-0101

PATENT APPLICATION FEE DETERMINATION RECORD

Substitute for Form PTO-875

Application or Docket Number
13/825,083

APPLICATION AS FILED - PART I

FOR	(Column 1) NUMBER FILED	(Column 2) NUMBER EXTRA	SMALL ENTITY RATE($)	SMALL ENTITY FEE($)	OR	OTHER THAN SMALL ENTITY RATE($)	OTHER THAN SMALL ENTITY FEE($)
BASIC FEE (37 CFR 1.16(a), (b), or (c))	N/A	N/A	N/A	140		N/A	
SEARCH FEE (37 CFR 1.16(k), (i), or (m))	N/A	N/A	N/A	240		N/A	
EXAMINATION FEE (37 CFR 1.16(o), (p), or (q))	N/A	N/A	N/A	360		N/A	
TOTAL CLAIMS (37 CFR 1.16(i))	20 minus 20 =	*	x 40 =	0.00	OR		
INDEPENDENT CLAIMS (37 CFR 1.16(h))	2 minus 3 =	*	x 210 =	0.00			
APPLICATION SIZE FEE (37 CFR 1.16(s))	If the specification and drawings exceed 100 sheets of paper, the application size fee due is $310 ($155 for small entity) for each additional 50 sheets or fraction thereof. See 35 U.S.C. 41(a)(1)(G) and 37 CFR 1.16(s).			0.00			
MULTIPLE DEPENDENT CLAIM PRESENT (37 CFR 1.16(j))				0.00			
* If the difference in column 1 is less than zero, enter "0" in column 2.			TOTAL	740		TOTAL	

APPLICATION AS AMENDED - PART II

		(Column 1) CLAIMS REMAINING AFTER AMENDMENT		(Column 2) HIGHEST NUMBER PREVIOUSLY PAID FOR	(Column 3) PRESENT EXTRA	SMALL ENTITY RATE($)	SMALL ENTITY ADDITIONAL FEE($)	OR	OTHER THAN SMALL ENTITY RATE($)	OTHER THAN SMALL ENTITY ADDITIONAL FEE($)
AMENDMENT A	Total (37 CFR 1.16(i))	*	Minus	**	=	x =		OR	x =	
AMENDMENT A	Independent (37 CFR 1.16(h))	*	Minus	***	=	x =		OR	x =	
AMENDMENT A	Application Size Fee (37 CFR 1.16(s))									
AMENDMENT A	FIRST PRESENTATION OF MULTIPLE DEPENDENT CLAIM (37 CFR 1.16(j))							OR		
						TOTAL ADD'L FEE		OR	TOTAL ADD'L FEE	

		(Column 1) CLAIMS REMAINING AFTER AMENDMENT		(Column 2) HIGHEST NUMBER PREVIOUSLY PAID FOR	(Column 3) PRESENT EXTRA	RATE($)	ADDITIONAL FEE($)		RATE($)	ADDITIONAL FEE($)
AMENDMENT B	Total (37 CFR 1.16(i))	*	Minus	**	=	x =		OR	x =	
AMENDMENT B	Independent (37 CFR 1.16(h))	*	Minus	***	=	x =		OR	x =	
AMENDMENT B	Application Size Fee (37 CFR 1.16(s))									
AMENDMENT B	FIRST PRESENTATION OF MULTIPLE DEPENDENT CLAIM (37 CFR 1.16(j))							OR		
						TOTAL ADD'L FEE		OR	TOTAL ADD'L FEE	

* If the entry in column 1 is less than the entry in column 2, write "0" in column 3.
** If the "Highest Number Previously Paid For" IN THIS SPACE is less than 20, enter "20".
*** If the "Highest Number Previously Paid For" IN THIS SPACE is less than 3, enter "3".
The "Highest Number Previously Paid For" (Total or Independent) is the highest found in the appropriate box in column 1.

MULTIPLE DEPENDENT CLAIM FEE CALCULATION SHEET

Substitute for Form PTO-1360
(For use with Form PTO/SB/06)

Application Number: 13825083

Filing Date:

Applicant(s): Jongju Na

* May be used for additional claims or amendments

CLAIMS	AS FILED		AFTER FIRST AMENDMENT		AFTER SECOND AMENDMENT	
	Indep	Depend	Indep	Depend	Indep	Depend
1	1		1			
2		1		1		
3		1		1		
4		1		1		
5		1		1		
6		1		1		
7		1		1		
8		1		1		
9		1		1		
10		1		1		
11	1		1			
12		1		1		
13		1		1		
14		1		1		
15		1		1		
16		1		1		
17		1		1		
18		1		1		
19		1		1		
20		1		1		
21						
22						
23						
24						
25						
26						
27						
28						
29						
30						
31						
32						
33						
34						
35						
36						
37						
38						
39						
40						
41						
42						
43						
44						
45						
46						
47						
48						
49						
50						
Total Indep	2		2		0	
Total Depend	18		18		0	
Total Claims	20		20		0	

	*		*		*	
	Indep	Depend	Indep	Depend	Indep	Depend
51						
52						
53						
54						
55						
56						
57						
58						
59						
60						
61						
62						
63						
64						
65						
66						
67						
68						
69						
70						
71						
72						
73						
74						
75						
76						
77						
78						
79						
80						
81						
82						
83						
84						
85						
86						
87						
88						
89						
90						
91						
92						
93						
94						
95						
96						
97						
98						
99						
100						

IN THE UNITED STATES PATENT AND TRADEMARK OFFICE

Applicant(s): Na	
Application No.: 13825083	
Filed: 3/19/2013	Art Unit:
Title: METHOD, SYSTEM, AND APPARATUS FOR DERMALOGICAL TREATMENT	
Attorney Docket No.: NA001KR_PCTUS	

RESPONSE TO NOTIFICATION OF MISSING REQUIREMENTS UNDER 35 USC 371

Commissioner for Patents
P.O. Box 1450
Alexandria, VA 22313-1450

Sir:

This is in response to a Notification of Missing Requirements under 35 USC 371. Enclosed are the following documents and fees to complete the filing requirements of the above-identified application.

(X) Executed Declaration and Power of Attorney identifying the application by the International Application Number and the International Filing Date and identifying the Citizenship of each Inventor.

(X) English Translation surcharge $70.00

(X) Missing Parts Surcharge $70.00

(X) This response is within two months from the date of the notice (December 6, 2013) and therefore is timely.

I hereby certify that this Correspondence is being deposited with the Unitec States Postal service with sufficient postage for first class mail in an envelope addressed to the Commissioner for Patents, P.O. Box 1450, Alexandria, VA 22313-1450, or the correspondence is being electronically transmitted to the USPTO, on the date indicated below.

Date of Deposit: January 20, 2014

Typed Name: Merle W. Richman, Esq.

Signature: /mwresq/

Respectfully submitted,

By /mwresq/
Merle Richman, Patent Attorney

Reg No. 38282

Date: 1/20/2014

Telephone No. 858 320-2030

PTO/SB/01A (09-12)
Approved for use through 01/31/2014. OMB 0651-0032
U.S. Patent and Trademark Office; U.S. DEPARTMENT OF COMMERCE
Under the Paperwork Reduction Act of 1995, no persons are required to respond to a collection of information unless it displays a valid OMB control number.

DECLARATION (37 CFR 1.63) FOR UTILITY OR DESIGN APPLICATION USING AN APPLICATION DATA SHEET (37 CFR 1.76)

Title of Invention	METHOD, SYSTEM, AND APPARATUS FOR DERMALOGICAL TREATMENT

As the below named inventor(s), I/we declare that:

This declaration is directed to:

- [ ] The attached application, or
- [x] United States Application or PCT international application number PCT/KR2012/001335 filed on February 22, 2012
  - [ ] As amended on _____ (if applicable);

I/we believe that I/we am/are the original and first inventor(s) of the subject matter which is claimed and for which a patent is sought;

I/we have reviewed and understand the contents of the above-identified application, including the claims, as amended by any amendment specifically referred to above;

I/we acknowledge the duty to disclose to the United States Patent and Trademark Office all information known to me/us to be material to patentability as defined in 37 CFR 1.56, including for continuation-in-part applications, material information which became available between the filing date of the prior application and the national or PCT International filing date of the continuation-in-part application. The above-identified application was made or authorized to be made by me/us.

WARNING:

Petitioner/applicant is cautioned to avoid submitting personal information in documents filed in a patent application that may contribute to identity theft. Personal information such as social security numbers, bank account numbers, or credit card numbers (other than a check or credit card authorization form PTO-2038 submitted for payment purposes) is never required by the USPTO to support a petition or an application. If this type of personal information is included in documents submitted to the USPTO, petitioners/applicants should consider redacting such personal information from the documents before submitting them to the USPTO. Petitioner/applicant is advised that the record of a patent application is available to the public after publication of the application (unless a non-publication request in compliance with 37 CFR 1.213(a) is made in the application) or issuance of a patent. Furthermore, the record from an abandoned application may also be available to the public if the application is referenced in a published application or an issued patent (see 37 CFR 1.14). Checks and credit card authorization forms PTO-2038 submitted for payment purposes are not retained in the application file and therefore are not publicly available.

All statements made herein of my/own knowledge are true, all statements made herein on information and belief are believed to be true, and further that these statements were made with the knowledge that willful false statements and the like are punishable by fine or imprisonment, or both, under 18 U.S.C. 1001, and may jeopardize the validity of the application or any patent issuing thereon. I hereby acknowledge that any willful false statement made in this declaration is punishable under 18 U.S.C. 1001 by fine or imprisonment of not more than five (5), or both.

FULL NAME OF INVENTOR(S)

Inventor one: Jong iu Na Date: 1 - 19 - 2014

Signature: [signature] Citizen of: KR

Inventor two: _____ Date: _____

Signature: _____ Citizen of: _____

- [ ] Additional inventors or a legal representative are being named on _____ additional form(s) attached hereto.

This collection of information is required by 35 U.S.C. 115 and 37 CFR 1.63. The information is required to obtain or retain a benefit by the public which is to file (and by the USPTO to process) an application. Confidentiality is governed by 35 U.S.C. 122 and 37 CFR 1.11 and 1.14. This collection is estimated to take 1 minute to complete, including gathering, preparing, and submitting the completed application form to the USPTO. Time will vary depending upon the individual case. Any comments on the amount of time you require to complete this form and/or suggestions for reducing this burden, should be sent to the Chief Information Officer, U.S. Patent and Trademark Office, U.S. Department of Commerce, P.O. Box 1450, Alexandria, VA 22313-1450. DO NOT SEND FEES OR COMPLETED FORMS TO THIS ADDRESS. SEND TO: Commissioner for Patents, P.O. Box 1450, Alexandria, VA 22313-1450.

If you need assistance in completing the form, call 1-800-PTO-9199 and select option 2.

Electronic Patent Application Fee Transmittal

Application Number:	13825083
Filing Date:	
Title of Invention:	METHOD, SYSTEM, AND APPARATUS FOR DERMALOGICAL TREATMENT
First Named Inventor/Applicant Name:	Jongju Na
Filer:	Merle W. Richman
Attorney Docket Number:	NA001KR_PCTUS

Filed as Small Entity

U.S. National Stage under 35 USC 371 Filing Fees

Description	Fee Code	Quantity	Amount	Sub-Total in USD($)
Basic Filing:				
Pages:				
Claims:				
Miscellaneous-Filing:				
Oath/Decl > 30 Mos From 371 commencement	2617	1	70	70
Eng. Transl. > 30 mo. From Priority Date	2618	1	70	70
Petition:				
Patent-Appeals-and-Interference:				
Post-Allowance-and-Post-Issuance:				

Description	Fee Code	Quantity	Amount	Sub-Total in USD($)
Extension-of-Time:				
Miscellaneous:				
		Total in USD ($)		**140**

Electronic Acknowledgement Receipt

EFS ID:	17959154
Application Number:	13825083
International Application Number:	
Confirmation Number:	9850
Title of Invention:	METHOD, SYSTEM, AND APPARATUS FOR DERMALOGICAL TREATMENT
First Named Inventor/Applicant Name:	Jongju Na
Customer Number:	26338
Filer:	Merle W. Richman
Filer Authorized By:	
Attorney Docket Number:	NA001KR_PCTUS
Receipt Date:	20-JAN-2014
Filing Date:	
Time Stamp:	16:32:32
Application Type:	U.S. National Stage under 35 USC 371

Payment information:

Submitted with Payment	yes
Payment Type	Credit Card
Payment was successfully received in RAM	$140
RAM confirmation Number	11483
Deposit Account	
Authorized User	

File Listing:

Document Number	Document Description	File Name	File Size(Bytes)/ Message Digest	Multi Part /.zip	Pages (if appl.)

1	Applicant Response to Pre-Exam Formalities Notice	na001us1-response-missing-requirements.pdf	68043 10154441ad81f878bb32b8386214c65e093b5976	no	1
Warnings:					
Information:					
2	Oath or Declaration filed	NA001US1-declaration-executed.pdf	556333 304ecb956ea1df1595372d40566d098116700ff9	no	1
Warnings:					
Information:					
3	Fee Worksheet (SB06)	fee-info.pdf	31705 d02e6881406d6322cd93454a27bc0da4a4040ff6	no	2
Warnings:					
Information:					
			Total Files Size (in bytes):	656081	

This Acknowledgement Receipt evidences receipt on the noted date by the USPTO of the indicated documents, characterized by the applicant, and including page counts, where applicable. It serves as evidence of receipt similar to a Post Card, as described in MPEP 503.

<u>New Applications Under 35 U.S.C. 111</u>
If a new application is being filed and the application includes the necessary components for a filing date (see 37 CFR 1.53(b)-(d) and MPEP 506), a Filing Receipt (37 CFR 1.54) will be issued in due course and the date shown on this Acknowledgement Receipt will establish the filing date of the application.

<u>National Stage of an International Application under 35 U.S.C. 371</u>
If a timely submission to enter the national stage of an international application is compliant with the conditions of 35 U.S.C. 371 and other applicable requirements a Form PCT/DO/EO/903 indicating acceptance of the application as a national stage submission under 35 U.S.C. 371 will be issued in addition to the Filing Receipt, in due course.

<u>New International Application Filed with the USPTO as a Receiving Office</u>
If a new international application is being filed and the international application includes the necessary components for an international filing date (see PCT Article 11 and MPEP 1810), a Notification of the International Application Number and of the International Filing Date (Form PCT/RO/105) will be issued in due course, subject to prescriptions concerning national security, and the date shown on this Acknowledgement Receipt will establish the international filing date of the application.

UNITED STATES PATENT AND TRADEMARK OFFICE

UNITED STATES DEPARTMENT OF COMMERCE
United States Patent and Trademark Office
Address: COMMISSIONER FOR PATENTS
P.O. Box 1450
Alexandria, Virginia 22313-1450
www.uspto.gov

U.S. APPLICATION NUMBER NO.	FIRST NAMED APPLICANT	ATTY. DOCKET NO.
13/825,083	Jongju Na	NA001KR_PCTUS

26338
MERLE W. RICHMAN, III
P.O. BOX 3333
LA JOLLA, CA 92038

INTERNATIONAL APPLICATION NO.	
PCT/KR2012/001335	
I.A. FILING DATE	PRIORITY DATE
02/22/2012	03/03/2011

CONFIRMATION NO. 9850
371 ACCEPTANCE LETTER

OC000000066212822

Date Mailed: 01/27/2014

NOTICE OF ACCEPTANCE OF APPLICATION UNDER 35 U.S.C 371 AND 37 CFR 1.495

The applicant is hereby advised that the United States Patent and Trademark Office, in its capacity as a Designated / Elected Office (37 CFR 1.495), has ACCEPTED the above identified international application for national patentability examination in the United States Patent and Trademark Office.

The United States Application Number assigned to the application is shown above and the relevant dates are:

01/20/2014	01/20/2014
DATE OF RECEIPT OF 35 U.S.C. 371(c)(1) and (c)(2) REQUIREMENTS	DATE OF COMPLETION OF ALL 35 U.S.C. 371 REQUIREMENTS

A Filing Receipt (PTO-103X) will be issued for the present application in due course. **THE DATE APPEARING ON THE FILING RECEIPT AS THE " FILING DATE" IS THE DATE ON WHICH THE LAST OF THE 35 U.S.C. 371 (c)(1), (c)(2) and (c)(4) REQUIREMENTS HAS BEEN RECEIVED IN THE OFFICE. THIS DATE IS SHOWN ABOVE.** *The filing date of the above identified application is the international filing date of the international application (Article 11(3) and 35 U.S.C. 363).*

The following items have been received:

- Indication of Small Entity Status
- Copy of the International Application filed on 03/19/2013
- English Translation of the IA filed on 10/14/2013
- Copy of the International Search Report filed on 03/19/2013
- Preliminary Amendments filed on 03/19/2013
- Inventor's Oath or Declaration filed on 01/20/2014
- Request for Immediate Examination filed on 03/19/2013
- U.S. Basic National Fees filed on 10/14/2013
- Priority Documents filed on 03/19/2013
- Application Data Sheet (37 CFR 1.76) filed on 03/26/2013

FORM PCT/DO/EO/903 (371 Acceptance Notice)

Applicant is reminded that any communications to the United States Patent and Trademark Office must be mailed to the address given in the heading and include the U.S. application no. shown above (37 CFR 1.5)

INDIA L EVANS

Telephone: (571) 272-9085

FORM PCT/DO/EO/903 (371 Acceptance Notice)

PATENT APPLICATION FEE DETERMINATION RECORD

Substitute for Form PTO-875

Application or Docket Number
13/825,083

APPLICATION AS FILED - PART I

FOR	(Column 1) NUMBER FILED	(Column 2) NUMBER EXTRA	SMALL ENTITY RATE($)	SMALL ENTITY FEE($)	OR	OTHER THAN SMALL ENTITY RATE($)	OTHER THAN SMALL ENTITY FEE($)
BASIC FEE (37 CFR 1.16(a), (b), or (c))	N/A	N/A	N/A	140		N/A	
SEARCH FEE (37 CFR 1.16(k), (i), or (m))	N/A	N/A	N/A	240		N/A	
EXAMINATION FEE (37 CFR 1.16(o), (p), or (q))	N/A	N/A	N/A	360		N/A	
TOTAL CLAIMS (37 CFR 1.16(i))	20 minus 20 =	*	x 40 =	0.00	OR		
INDEPENDENT CLAIMS (37 CFR 1.16(h))	2 minus 3 =	*	x 210 =	0.00			
APPLICATION SIZE FEE (37 CFR 1.16(s))	If the specification and drawings exceed 100 sheets of paper, the application size fee due is $310 ($155 for small entity) for each additional 50 sheets or fraction thereof. See 35 U.S.C. 41(a)(1)(G) and 37 CFR 1.16(s).			0.00			
MULTIPLE DEPENDENT CLAIM PRESENT (37 CFR 1.16(j))				0.00			
* If the difference in column 1 is less than zero, enter "0" in column 2.			TOTAL	740		TOTAL	

APPLICATION AS AMENDED - PART II

		(Column 1) CLAIMS REMAINING AFTER AMENDMENT		(Column 2) HIGHEST NUMBER PREVIOUSLY PAID FOR	(Column 3) PRESENT EXTRA	SMALL ENTITY RATE($)	SMALL ENTITY ADDITIONAL FEE($)	OR	OTHER THAN SMALL ENTITY RATE($)	OTHER THAN SMALL ENTITY ADDITIONAL FEE($)
AMENDMENT A	Total (37 CFR 1.16(i))	*	Minus	**	=	x =		OR	x =	
AMENDMENT A	Independent (37 CFR 1.16(h))	*	Minus	***	=	x =		OR	x =	
AMENDMENT A	Application Size Fee (37 CFR 1.16(s))									
AMENDMENT A	FIRST PRESENTATION OF MULTIPLE DEPENDENT CLAIM (37 CFR 1.16(j))							OR		
						TOTAL ADD'L FEE		OR	TOTAL ADD'L FEE	

		(Column 1) CLAIMS REMAINING AFTER AMENDMENT		(Column 2) HIGHEST NUMBER PREVIOUSLY PAID FOR	(Column 3) PRESENT EXTRA	RATE($)	ADDITIONAL FEE($)		RATE($)	ADDITIONAL FEE($)
AMENDMENT B	Total (37 CFR 1.16(i))	*	Minus	**	=	x =		OR	x =	
AMENDMENT B	Independent (37 CFR 1.16(h))	*	Minus	***	=	x =		OR	x =	
AMENDMENT B	Application Size Fee (37 CFR 1.16(s))									
AMENDMENT B	FIRST PRESENTATION OF MULTIPLE DEPENDENT CLAIM (37 CFR 1.16(j))							OR		
						TOTAL ADD'L FEE		OR	TOTAL ADD'L FEE	

* If the entry in column 1 is less than the entry in column 2, write "0" in column 3.
** If the "Highest Number Previously Paid For" IN THIS SPACE is less than 20, enter "20".
*** If the "Highest Number Previously Paid For" IN THIS SPACE is less than 3, enter "3".
The "Highest Number Previously Paid For" (Total or Independent) is the highest found in the appropriate box in column 1.

UNITED STATES PATENT AND TRADEMARK OFFICE

UNITED STATES DEPARTMENT OF COMMERCE
United States Patent and Trademark Office
Address: COMMISSIONER FOR PATENTS
P.O. Box 1450
Alexandria, Virginia 22313-1450
www.uspto.gov

APPLICATION NUMBER	FILING or 371(c) DATE	GRP ART UNIT	FIL FEE REC'D	ATTY.DOCKET.NO	TOT CLAIMS	IND CLAIMS
13/825,083	01/20/2014		880	NA001KR_PCTUS	20	2

CONFIRMATION NO. 9850

26338
MERLE W. RICHMAN, III
P.O. BOX 3333
LA JOLLA, CA 92038

FILING RECEIPT

OC000000066212821

Date Mailed: 01/27/2014

Receipt is acknowledged of this non-provisional patent application. The application will be taken up for examination in due course. Applicant will be notified as to the results of the examination. Any correspondence concerning the application must include the following identification information: the U.S. APPLICATION NUMBER, FILING DATE, NAME OF APPLICANT, and TITLE OF INVENTION. Fees transmitted by check or draft are subject to collection. Please verify the accuracy of the data presented on this receipt. **If an error is noted on this Filing Receipt, please submit a written request for a Filing Receipt Correction. Please provide a copy of this Filing Receipt with the changes noted thereon. If you received a "Notice to File Missing Parts" for this application, please submit any corrections to this Filing Receipt with your reply to the Notice. When the USPTO processes the reply to the Notice, the USPTO will generate another Filing Receipt incorporating the requested corrections**

Inventor(s)

Jongju Na, Songpa-Gu, KOREA, REPUBLIC OF;

Applicant(s)

Jongju Na, Songpa-Gu, KOREA, REPUBLIC OF;

Power of Attorney: None

Domestic Priority data as claimed by applicant

This application is a 371 of PCT/KR2012/001335 02/22/2012
which claims benefit of 61/449,080 03/03/2011
and is a CON of 13/060,274 03/30/2011

Foreign Applications for which priority is claimed (You may be eligible to benefit from the **Patent Prosecution Highway** program at the USPTO. Please see http://www.uspto.gov for more information.) - None.
Foreign application information must be provided in an Application Data Sheet in order to constitute a claim to foreign priority. See 37 CFR 1.55 and 1.76.

If Required, Foreign Filing License Granted: 01/23/2014

The country code and number of your priority application, to be used for filing abroad under the Paris Convention, is **US 13/825,083**

Projected Publication Date: 05/08/2014

Non-Publication Request: No

Early Publication Request: No
**** SMALL ENTITY ****

Title

METHOD, SYSTEM, AND APPARATUS FOR DERMALOGICAL TREATMENT

Preliminary Class

Statement under 37 CFR 1.55 or 1.78 for AIA (First Inventor to File) Transition Applications: No

PROTECTING YOUR INVENTION OUTSIDE THE UNITED STATES

Since the rights granted by a U.S. patent extend only throughout the territory of the United States and have no effect in a foreign country, an inventor who wishes patent protection in another country must apply for a patent in a specific country or in regional patent offices. Applicants may wish to consider the filing of an international application under the Patent Cooperation Treaty (PCT). An international (PCT) application generally has the same effect as a regular national patent application in each PCT-member country. The PCT process **simplifies** the filing of patent applications on the same invention in member countries, but **does not result** in a grant of "an international patent" and does not eliminate the need of applicants to file additional documents and fees in countries where patent protection is desired.

Almost every country has its own patent law, and a person desiring a patent in a particular country must make an application for patent in that country in accordance with its particular laws. Since the laws of many countries differ in various respects from the patent law of the United States, applicants are advised to seek guidance from specific foreign countries to ensure that patent rights are not lost prematurely.

Applicants also are advised that in the case of inventions made in the United States, the Director of the USPTO must issue a license before applicants can apply for a patent in a foreign country. The filing of a U.S. patent application serves as a request for a foreign filing license. The application's filing receipt contains further information and guidance as to the status of applicant's license for foreign filing.

Applicants may wish to consult the USPTO booklet, "General Information Concerning Patents" (specifically, the section entitled "Treaties and Foreign Patents") for more information on timeframes and deadlines for filing foreign patent applications. The guide is available either by contacting the USPTO Contact Center at 800-786-9199, or it can be viewed on the USPTO website at http://www.uspto.gov/web/offices/pac/doc/general/index.html.

For information on preventing theft of your intellectual property (patents, trademarks and copyrights), you may wish to consult the U.S. Government website, http://www.stopfakes.gov. Part of a Department of Commerce initiative, this website includes self-help "toolkits" giving innovators guidance on how to protect intellectual property in specific countries such as China, Korea and Mexico. For questions regarding patent enforcement issues, applicants may call the U.S. Government hotline at 1-866-999-HALT (1-866-999-4258).

LICENSE FOR FOREIGN FILING UNDER

Title 35, United States Code, Section 184

Title 37, Code of Federal Regulations, 5.11 & 5.15

GRANTED

The applicant has been granted a license under 35 U.S.C. 184, if the phrase "IF REQUIRED, FOREIGN FILING LICENSE GRANTED" followed by a date appears on this form. Such licenses are issued in all applications where

the conditions for issuance of a license have been met, regardless of whether or not a license may be required as set forth in 37 CFR 5.15. The scope and limitations of this license are set forth in 37 CFR 5.15(a) unless an earlier license has been issued under 37 CFR 5.15(b). The license is subject to revocation upon written notification. The date indicated is the effective date of the license, unless an earlier license of similar scope has been granted under 37 CFR 5.13 or 5.14.

This license is to be retained by the licensee and may be used at any time on or after the effective date thereof unless it is revoked. This license is automatically transferred to any related applications(s) filed under 37 CFR 1.53(d). This license is not retroactive.

The grant of a license does not in any way lessen the responsibility of a licensee for the security of the subject matter as imposed by any Government contract or the provisions of existing laws relating to espionage and the national security or the export of technical data. Licensees should apprise themselves of current regulations especially with respect to certain countries, of other agencies, particularly the Office of Defense Trade Controls, Department of State (with respect to Arms, Munitions and Implements of War (22 CFR 121-128)); the Bureau of Industry and Security, Department of Commerce (15 CFR parts 730-774); the Office of Foreign AssetsControl, Department of Treasury (31 CFR Parts 500+) and the Department of Energy.

NOT GRANTED

No license under 35 U.S.C. 184 has been granted at this time, if the phrase "IF REQUIRED, FOREIGN FILING LICENSE GRANTED" DOES NOT appear on this form. Applicant may still petition for a license under 37 CFR 5.12, if a license is desired before the expiration of 6 months from the filing date of the application. If 6 months has lapsed from the filing date of this application and the licensee has not received any indication of a secrecy order under 35 U.S.C. 181, the licensee may foreign file the application pursuant to 37 CFR 5.15(b).

SelectUSA

The United States represents the largest, most dynamic marketplace in the world and is an unparalleled location for business investment, innovation, and commercialization of new technologies. The U.S. offers tremendous resources and advantages for those who invest and manufacture goods here. Through SelectUSA, our nation works to promote and facilitate business investment. SelectUSA provides information assistance to the international investor community; serves as an ombudsman for existing and potential investors; advocates on behalf of U.S. cities, states, and regions competing for global investment; and counsels U.S. economic development organizations on investment attraction best practices. To learn more about why the United States is the best country in the world to develop technology, manufacture products, deliver services, and grow your business, visit http://www.SelectUSA.gov or call +1-202-482-6800.

UNITED STATES PATENT AND TRADEMARK OFFICE

UNITED STATES DEPARTMENT OF COMMERCE
United States Patent and Trademark Office
Address: COMMISSIONER FOR PATENTS
P.O. Box 1450
Alexandria, Virginia 22313-1450
www.uspto.gov

APPLICATION NUMBER	FILING OR 371(C) DATE	FIRST NAMED APPLICANT	ATTY. DOCKET NO./TITLE
13/825,083	01/20/2014	Jongju Na	NA001KR_PCTUS

CONFIRMATION NO. 9850

PUBLICATION NOTICE

26338
MERLE W. RICHMAN, III
P.O. BOX 3333
LA JOLLA, CA 92038

OC000000068318749

Title:METHOD, SYSTEM, AND APPARATUS FOR DERMALOGICAL TREATMENT

Publication No.US-2014-0128685-A1
Publication Date:05/08/2014

NOTICE OF PUBLICATION OF APPLICATION

The above-identified application will be electronically published as a patent application publication pursuant to 37 CFR 1.211, et seq. The patent application publication number and publication date are set forth above.

The publication may be accessed through the USPTO's publically available Searchable Databases via the Internet at www.uspto.gov. The direct link to access the publication is currently http://www.uspto.gov/patft/.

The publication process established by the Office does not provide for mailing a copy of the publication to applicant. A copy of the publication may be obtained from the Office upon payment of the appropriate fee set forth in 37 CFR 1.19(a)(1). Orders for copies of patent application publications are handled by the USPTO's Office of Public Records. The Office of Public Records can be reached by telephone at (703) 308-9726 or (800) 972-6382, by facsimile at (703) 305-8759, by mail addressed to the United States Patent and Trademark Office, Office of Public Records, Alexandria, VA 22313-1450 or via the Internet.

In addition, information on the status of the application, including the mailing date of Office actions and the dates of receipt of correspondence filed in the Office, may also be accessed via the Internet through the Patent Electronic Business Center at www.uspto.gov using the public side of the Patent Application Information and Retrieval (PAIR) system. The direct link to access this status information is currently http://pair.uspto.gov/. Prior to publication, such status information is confidential and may only be obtained by applicant using the private side of PAIR.

Further assistance in electronically accessing the publication, or about PAIR, is available by calling the Patent Electronic Business Center at 1-866-217-9197.

Office of Data Managment, Application Assistance Unit (571) 272-4000, or (571) 272-4200, or 1-888-786-0101

UNITED STATES PATENT AND TRADEMARK OFFICE

UNITED STATES DEPARTMENT OF COMMERCE
United States Patent and Trademark Office
Address: COMMISSIONER FOR PATENTS
P.O. Box 1450
Alexandria, Virginia 22313-1450
www.uspto.gov

APPLICATION NO.	FILING DATE	FIRST NAMED INVENTOR	ATTORNEY DOCKET NO.	CONFIRMATION NO.
13/825,083	01/20/2014	Jongju Na	NA001KR_PCTUS	9850

26338 7590 08/27/2015
MERLE W. RICHMAN, III
P.O. BOX 3333
LA JOLLA, CA 92038

EXAMINER
COMSTOCK, DAVID C

ART UNIT	PAPER NUMBER
3733	

MAIL DATE	DELIVERY MODE
08/27/2015	PAPER

Please find below and/or attached an Office communication concerning this application or proceeding.

The time period for reply, if any, is set in the attached communication.

PTOL-90A (Rev. 04/07)

Office Action Summary	Application No. 13/825,083	Applicant(s) NA, JONGJU	
	Examiner DAVID C. COMSTOCK	Art Unit 3733	AIA (First Inventor to File) Status No

-- The MAILING DATE of this communication appears on the cover sheet with the correspondence address --

Period for Reply

A SHORTENED STATUTORY PERIOD FOR REPLY IS SET TO EXPIRE 3 MONTHS FROM THE MAILING DATE OF THIS COMMUNICATION.

- Extensions of time may be available under the provisions of 37 CFR 1.136(a). In no event, however, may a reply be timely filed after SIX (6) MONTHS from the mailing date of this communication.
- If NO period for reply is specified above, the maximum statutory period will apply and will expire SIX (6) MONTHS from the mailing date of this communication.
- Failure to reply within the set or extended period for reply will, by statute, cause the application to become ABANDONED (35 U.S.C. § 133). Any reply received by the Office later than three months after the mailing date of this communication, even if timely filed, may reduce any earned patent term adjustment. See 37 CFR 1.704(b).

Status

1)☒ Responsive to communication(s) filed on *23 April 2013*.

☐ A declaration(s)/affidavit(s) under **37 CFR 1.130(b)** was/were filed on _____.

2a)☐ This action is **FINAL**. 2b)☒ This action is non-final.

3)☐ An election was made by the applicant in response to a restriction requirement set forth during the interview on _____; the restriction requirement and election have been incorporated into this action.

4)☐ Since this application is in condition for allowance except for formal matters, prosecution as to the merits is closed in accordance with the practice under *Ex parte Quayle*, 1935 C.D. 11, 453 O.G. 213.

Disposition of Claims*

5)☒ Claim(s) *1-24* is/are pending in the application.

5a) Of the above claim(s) _____ is/are withdrawn from consideration.

6)☐ Claim(s) _____ is/are allowed.

7)☒ Claim(s) *1-5,8,10-15,18 and 20-24* is/are rejected.

8)☒ Claim(s) *6,7,9,16,17 and 19* is/are objected to.

9)☐ Claim(s) _____ are subject to restriction and/or election requirement.

* If any claims have been determined allowable, you may be eligible to benefit from the **Patent Prosecution Highway** program at a participating intellectual property office for the corresponding application. For more information, please see http://www.uspto.gov/patents/init_events/pph/index.jsp or send an inquiry to PPHfeedback@uspto.gov.

Application Papers

10)☐ The specification is objected to by the Examiner.

11)☒ The drawing(s) filed on *19 March 2013* is/are: a)☒ accepted or b)☐ objected to by the Examiner.

Applicant may not request that any objection to the drawing(s) be held in abeyance. See 37 CFR 1.85(a).

Replacement drawing sheet(s) including the correction is required if the drawing(s) is objected to. See 37 CFR 1.121(d).

Priority under 35 U.S.C. § 119

12)☒ Acknowledgment is made of a claim for foreign priority under 35 U.S.C. § 119(a)-(d) or (f).

Certified copies:

a)☒ All b)☐ Some** c)☐ None of the:

1.☐ Certified copies of the priority documents have been received.

2.☐ Certified copies of the priority documents have been received in Application No. _____.

3.☒ Copies of the certified copies of the priority documents have been received in this National Stage application from the International Bureau (PCT Rule 17.2(a)).

** See the attached detailed Office action for a list of the certified copies not received.

Attachment(s)

1) ☒ Notice of References Cited (PTO-892)

2) ☐ Information Disclosure Statement(s) (PTO/SB/08a and/or PTO/SB/08b) Paper No(s)/Mail Date _____.

3) ☐ Interview Summary (PTO-413) Paper No(s)/Mail Date. _____ .

4) ☐ Other: _____.

DETAILED ACTION

Notice of Pre-AIA or AIA Status

The present application is being examined under the pre-AIA first to invent provisions.

Claim Rejections - 35 USC § 102

The following is a quotation of the appropriate paragraphs of pre-AIA 35 U.S.C. 102 that form the basis for the rejections under this section made in this Office action:

A person shall be entitled to a patent unless –

(b) the invention was patented or described in a printed publication in this or a foreign country or in public use or on sale in this country, more than one year prior to the date of application for patent in the United States.

Claims 1, 2, 11 and 12 are rejected under pre-AIA 35 U.S.C. 102(b) as being anticipated by Crocker (6,890,319).

Crocker discloses the claimed invention including a method and apparatus for treating dermalogical tissue comprising placing a user holdable device having a plurality of extendable needles on a surface to be treated. See, e.g. col. 3, lines 6-8 and 58-60. A motor is energized to extend the needles a desired distance and the needles are energized via a signal generator electrically coupled to the plurality of needles (see, e.g. col. 10, lines 11-20). A therapeutic chemical is introduced to the tissue via the device (see, e.g. col. 3, lines 58-60).

Claim Rejections - 35 USC § 103

The following is a quotation of pre-AIA 35 U.S.C. 103(a) which forms the basis for all obviousness rejections set forth in this Office action:

(a) A patent may not be obtained though the invention is not identically disclosed or described as set forth in section 102 of this title, if the differences between the subject matter sought to be patented and the prior art are such that the subject matter as a whole would have been obvious at the time the invention was made to a person having ordinary skill in the art to which said subject matter pertains. Patentability shall not be negatived by the manner in which the invention was made.

Claims 3, 4, 10, 13, 14 and 20-24 rejected under pre-AIA 35 U.S.C. 103(a) as being unpatentable over Crocker (6,890,319) in view of Mulholland (7,618,429).

Crocker discloses the claimed invention except for explicitly reciting the releasably couplable needle assembly. Mulholland teaches that a dermalogical treatment system may comprise a releasably couplable needle assembly to make the tip disposable and allow reuse of the handpiece (see, e.g., col. 4, lines 32-33). It would have been obvious to a person having ordinary skill in the art at the time of the invention to have provided the device of Crocker with a releasably couplable needle assembly, in view of Mulholland, in order to make the tip disposable and allow reuse of the handpiece.

Claims 5, 8, 15 and 18 are rejected under pre-AIA 35 U.S.C. 103(a) as being unpatentable over Crocker (6,890,319) and Mulholland (7,618,429), as applied to claims 3 and 13 above, and further in view of Kim et al. (2009/0312691).

The device of the combination of Crocker and Mulholland discloses the claimed invention except for explicitly reciting the use of an LED. Kim et al. teach a dermalogical treatment system comprising an LED to provide a visual indication that power is being supplied to the motor. It would have been obvious to a person having ordinary skill in the art at the time of the invention to have provided the device of the combination of Crocker and Mulholland with an LED, in view of Kim et al., in order to provide a visual indication that power is being supplied to the motor.

Allowable Subject Matter

Claims 6, 7, 9, 16, 17 and 19 are objected to as being dependent upon a rejected base claim, but would be allowable if rewritten in independent form including all of the limitations of the base claim and any intervening claims.

Conclusion

The prior art made of record and not relied upon is considered pertinent to applicant's disclosure.

Any inquiry concerning this communication or earlier communications from the examiner should be directed to David Comstock whose telephone number is (571) 272-4710. The examiner can normally be reached Monday-Friday, 9 a.m. - 6 p.m.

If attempts to reach the examiner by telephone are unsuccessful, ***please contact* the examiner's supervisor, SPE, *at* (571) 272-4760**. The fax phone number for the organization where this application or proceeding is assigned is 571-273-8300.

Information regarding the status of an application may be obtained from the Patent Application Information Retrieval (PAIR) system. Status information for published applications may be obtained from either Private PAIR or Public PAIR. Status information for unpublished applications is available through Private PAIR only. For more information about the PAIR system, see http://pair-direct.uspto.gov. Should you have questions on access to the Private PAIR system, contact the Electronic Business Center (EBC) at 866-217-9197 (toll-free). If you would like assistance from a USPTO Customer Service Representative or access to the automated information system, call 800-786-9199 (IN USA OR CANADA) or 571-272-1000.

/DAVID C COMSTOCK/
Examiner, Art Unit 3733
/PEDRO PHILOGENE/
Primary Examiner, Art Unit 3733

Notice of References Cited	Application/Control No. 13/825,083	Applicant(s)/Patent Under Reexamination NA, JONGJU	
	Examiner DAVID C. COMSTOCK	Art Unit 3733	Page 1 of 1

U.S. PATENT DOCUMENTS

*		Document Number Country Code-Number-Kind Code	Date MM-YYYY	Name	Classification
*	A	US-2009/0312691	12-2009	Kim et al.	604/22
*	B	US-2008/0269666	10-2008	Wang et al.	604/21
*	C	US-2007/0276318	11-2007	Henley, Julian L.	604/20
*	D	US-2007/0231255	10-2007	Barolet et al.	424/001.11
*	E	US-2007/0142885	06-2007	Hantash et al.	607/102
*	F	US-2007/0073217	03-2007	James, Terry L.	604/046
*	G	US-7,824,394	11-2010	Manstein, Dieter	606/9
*	H	US-7,618,429	11-2009	Mulholland, R. Stephen	606/186
*	I	US-6,890,319	05-2005	Crocker, Peter John	604/131
	J	US-			
	K	US-			
	L	US-			
	M	US-			

FOREIGN PATENT DOCUMENTS

*		Document Number Country Code-Number-Kind Code	Date MM-YYYY	Country	Name	Classification
	N					
	O					
	P					
	Q					
	R					
	S					
	T					

NON-PATENT DOCUMENTS

*		Include as applicable: Author, Title Date, Publisher, Edition or Volume, Pertinent Pages)
	U	
	V	
	W	
	X	

*A copy of this reference is not being furnished with this Office action. (See MPEP § 707.05(a).)
Dates in MM-YYYY format are publication dates. Classifications may be US or foreign.

EAST Search History

EAST Search History (Prior Art)

Ref #	Hits	Search Query	DBs	Default Operator	Plurals	Time Stamp
L2	12360	((600/249) or (601/2) or (604/20,21,46,117) or (606/9) or (607/102,189) or (424/1.11)).CCLS.	US-PGPUB; USPAT; USOCR	OR	OFF	2015/08/24 11:11
L3	1957	A61B17/320068.cpc.	US-PGPUB; USPAT; USOCR	OR	OFF	2015/08/24 11:11
L4	717	A61B1/06,20.cpc.	US-PGPUB; USPAT; USOCR	OR	OFF	2015/08/24 11:12
L5	1023	A61N1/30.cpc.	US-PGPUB; USPAT; USOCR	OR	OFF	2015/08/24 11:12
L6	1355	A61N5/0616.cpc.	US-PGPUB; USPAT; USOCR	OR	OFF	2015/08/24 11:12
L7	2509	A61M37/00,0015.cpc.	US-PGPUB; USPAT; USOCR	OR	OFF	2015/08/24 11:12
L8	946	A61M2037/0007,0046,0061.cpc.	US-PGPUB; USPAT; USOCR	OR	OFF	2015/08/24 11:12
L9	636	(2 3 4 5 6 7 8) and needle and electric$4 and motor and (derm$2 or dermalogical or dermatological or skin)	US-PGPUB; USPAT; USOCR	OR	OFF	2015/08/24 11:13
L10	231	(2 3 4 5 6 7 8) and needle and electric$4 and motor and (derm$2 or dermalogical or dermatological or skin) and (led or "l.e.d." or "light emitting diode")	US-PGPUB; USPAT; USOCR	OR	OFF	2015/08/24 11:29
S18	650	(needle same motor) and (dermalogical or dermatological or dermis or skin) and electric$3 and (led or "l.e.d." or "light emitting diode")	US-PGPUB; USPAT; USOCR	OR	OFF	2015/08/23 16:35

EAST Search History (Interference)

<This search history is empty>

8/24/2015 11:36:38 AM
C:\Users\dcomstock\Documents\EAST\Workspaces\default.wsp

Search Notes	Application/Control No.	Applicant(s)/Patent Under Reexamination
	13825083	NA, JONGJU
	Examiner	**Art Unit**
	DAVID C COMSTOCK	3733

CPC- SEARCHED

Symbol	Date	Examiner
A61B17/320068	8/24/2015	/DC/
A61B1/06,20	8/24/2015	/DC/
A61N1/30	8/24/2015	/DC/
A61N5/0616	8/24/2015	/DC/
A61M37/00,0015	8/24/2015	/DC/
A61M2037/0007,0046,0061	8/24/2015	/DC/

CPC COMBINATION SETS - SEARCHED

Symbol	Date	Examiner

US CLASSIFICATION SEARCHED

Class	Subclass	Date	Examiner
600	249	8/24/2015	/DC/
601	2	8/24/2015	/DC/
604	20,21,46,117	8/24/2015	/DC/
606	9	8/24/2015	/DC/
607	102,189	8/24/2015	/DC/
424	1.11	8/24/2015	/DC/

SEARCH NOTES

Search Notes	Date	Examiner
EAST text search--see printout	8/24/2015	/DC/
Inventor name search--see printout	8/24/2015	/DC/

INTERFERENCE SEARCH

US Class/ CPC Symbol	US Subclass / CPC Group	Date	Examiner

/DAVID C COMSTOCK/ Examiner.Art Unit 3733	

Index of Claims	Application/Control No.	Applicant(s)/Patent Under Reexamination
	13825083	NA, JONGJU
	Examiner	**Art Unit**
	DAVID C COMSTOCK	3733

✓	Rejected	-	Cancelled	N	Non-Elected	A	Appeal
=	Allowed	÷	Restricted	I	Interference	O	Objected

☐ Claims renumbered in the same order as presented by applicant ☐ CPA ☐ T.D. ☐ R.1.47

CLAIM		DATE								
Final	Original	08/24/2015								
	1	✓								
	2	✓								
	3	✓								
	4	✓								
	5	✓								
	6	O								
	7	O								
	8	✓								
	9	O								
	10	✓								
	11	✓								
	12	✓								
	13	✓								
	14	✓								
	15	✓								
	16	O								
	17	O								
	18	✓								
	19	O								
	20	✓								
	21	✓								
	22	✓								
	23	✓								
	24	✓								

IN THE UNITED STATES PATENT AND TRADEMARK OFFICE

Applicant(s): Na	
Application No.: 13825083	Art Unit: 3733
Filed: 3/19/2013	Examiner: David C. Comstock
Title: METHOD, SYSTEM, AND APPARATUS FOR TREATMENT	
Attorney Docket No.: NA001KR_PCTUS	

Commissioner for Patents
P.O. Box 1450
Alexandria, VA 22313-1450

RESPONSE UNDER 37 CFR 1.111

Dear Sir:

In response to the non-Final Office Action of August 27, 2015, please consider the following amendments and remarks.

Amendment to the Claims begins on page 2 of this paper

Remarks begin on page 7 of this paper.

In the claims:

1. (Currently Amended) A method of treating dermatological tissue, comprising:

placing a user holdable device releasably couplable deployable needle assembly end surface on or near dermatological tissue to be treated, the holdable device including a proximal end and the releasably couplable deployable needle assembly, the deployable needle assembly mechanically separatably from the proximal end and ~~a distal end~~, ~~the distal end~~ including a plurality of ~~extendable~~ needles extendable from ~~a~~ the deployable needle assembly ~~device distal~~ end surface ~~on or near dermatological tissue to be treated~~, one of the proximal end and the deployable needle assembly including at least one electrical conductor and the other including at least one restorably deflectable electrical contact couplable to the one of the proximal end and the deployable needle assembly at least one electrical conductor;

communicating electrical signals from the proximal end to the plurality of the extendable needles;

energizing a motor coupled to ~~the~~ a plurality of extendable needles to cause a plurality of the extendable needles to extend a desired distance from the needle assembly ~~distal~~ end surface; and

energizing the plurality of ~~the extendable~~ extended needles via a signal generator electrically coupled to the plurality of ~~the extendable~~ extended needles.

2. (Currently Amended) The method of claim 1, further comprising placing a dermatological chemical one of on at least a portion of the dermatological tissue, at least a portion of the end surface, and the plurality of the extendable needles.

3. (Cancelled).

4. (Currently Amended) The method of claim ~~3~~1, wherein the proximal end includes the needle deploying motor, the motor including a draft shaft releasably couplable to the deployable needle assembly.

5. (Currently Amended) The method of claim ~~3~~1, wherein the proximal end further includes at least one embedded LED therein and further including energizing the LED when the signal generator is energized, the at least one embedded LED illuminating the deployable needle assembly when energized.

6. (Cancelled).

7. (Currently Amended) The method of claim ~~6~~1, wherein the at least one restorably deflectable electrical contact includes a depressible pin.

8. (Previously Presented) The method of claim 5, wherein the releasably couplable deployable needle assembly includes a translucent section to communicate illumination from the least one embedded LED to the plurality of extendable needles.

9. (Currently Amended) The method of claim ~~6~~1, wherein a first deflectable electrical contact is coupled to a first plurality of the plurality of extendable needles and a second deflectable electrical contact is coupled to a second, different plurality of the plurality of extendable needles.

10. (Currently Amended) The method of claim ~~3~~1, further comprising employing the signal generator to energize the plurality of ~~the extendable~~ extended needles with energy to one of cut, blend, or coagulate dermatological tissue.

11. (Currently Amended) An apparatus for treating dermatological tissue, comprising:

a user holdable device including a proximal end and a releasably couplable deployable needle assembly~~distal end~~, the deployable needle assembly mechanically separatably from the proximal end ~~distal end~~ and including a plurality of extendable needles, a plurality of the extendable needles extendable from ~~the~~ a deployable needle assembly ~~device distal~~ end surface, one of the proximal end and the deployable needle assembly including at least one electrical conductor and the other including at least one restorably deflectable electrical contact couplable to the one of the proximal end and the deployable needle assembly at least one electrical conductor;

a motor coupled to ~~the~~ a plurality of ~~the~~ extendable needles that causes the plurality of ~~the~~ extendable needles to extend a desired distance from the needle assembly ~~distal~~ end surface when the motor is energized with a particular signal; and

a signal generator electrically coupled to the plurality of ~~the extendable~~ extended needles to energize the plurality of ~~the extendable~~ extended needles.

12. (Previously Presented) The apparatus of claim 11, wherein the device proximal end includes an electrical connector couplable to the signal generator.

13. (Cancelled).

14. (Currently Amended) The apparatus of claim ~~13~~11, wherein the proximal end includes the needle deploying motor, the motor including a draft shaft releasably couplable to the deployable needle assembly.

15. (Currently Amended) The apparatus of claim ~~13~~11, wherein the proximal end further includes at least one embedded LED therein and the apparatus further including a photonic signal generator electrically coupled to the least one embedded LED, the at least one embedded LED illuminating the deployable needle assembly when energized.

16. (Cancelled).

17. (Currently Amended) The apparatus of claim ~~16~~11, the wherein at least one restorably deflectable electrical contact includes a depressible pin.

18. (Previously Presented) The apparatus of claim 15, wherein the releasably couplable deployable needle assembly includes a translucent section that communicates illumination from the least one embedded LED to the plurality of extendable needles.

19. (Currently Amended) The apparatus of claim ~~16~~11, wherein a first deflectable electrical contact is coupled to a first plurality of the plurality of extendable needles and a second deflectable electrical contact is coupled to a second, different plurality of the plurality of extendable needles.

20. (Currently Amended) The apparatus of claim ~~13~~11, wherein the signal generator energizes the plurality of ~~the extendable~~ extended needles with energy to one of cut, blend, or coagulate dermatological tissue.

21. (Currently Amended) The apparatus of claim ~~13~~11, further comprising the motor deploying the plurality of extendable needles to a predetermined depth and the signal generator energizing the plurality of ~~extendable~~ extended needles to a predetermined intensity for a predetermined duty cycle.

22. (Currently Amended) The apparatus of claim ~~13~~11, further comprising the signal generator energizing a first plurality of ~~the extendable~~ extended needles to cause vibration of a second plurality of ~~extendable~~ extended needles, the first plurality being greater than or equal to the second plurality.

23. (Currently Amended) The method of claim ~~3~~1, further comprising deploying the plurality of extendable needles to a predetermined depth and employing the signal generator to energize the plurality of ~~extendable~~ extended needles to a predetermined intensity for a predetermined duty cycle.

24. (Currently Amended) The method of claim ~~3~~1, further comprising employing the signal generator to energize a first plurality of the ~~extendable~~ extended needles to cause vibration of a second plurality of ~~extendable~~ extended needles, the first plurality being greater than or equal to the second plurality.

REMARKS

Status of the claims

- Claims in issue before this Amendment: 1-24
- List of claims amended: 1, 2, 4, 5, 7, 9, 10, 11, 14, 15, 17, and 19-24
- List of claims canceled: 3, 6, 13, and 16
- List of claims added: *None*
- Claims in issue as of this Amendment: 1, 2, 4, 5, 7-12 , 14, 15, and 17-24
- No new matter has been added.

In the Office Action dated August 27, 2015, the Examiner indicated that claims 6, 7, 9, 16, 17, and 19 are objected to but otherwise allowable provided they are rewritten to include the limitations of their base claim and any intervening claims. Claim 6 was dependent on claim 3 and claim 3 was dependent on base claim 1. Claim 1 has been amended to include the limitations of both claims 3 and 6. Accordingly, Applicants respectfully contend that claim 1 is allowable. Claims 2, 4, 5, 7-10, 23, and 24 are dependent directly or indirectly on claim 1. Applicants respectfully contend that claims 2, 4, 5, 7-10, 23, and 24 are allowable due the Allowability of claim 1.

Claim 16 was dependent on claim 13 and claim 13 was dependent on base claim 11. Claim 11 has been amended to include the limitations of both claims 13 and 16. Accordingly, Applicants respectfully contend that claim 11 is allowable. Claims 12, 14, 15, and 17-22 are dependent directly or indirectly on claim 11. Applicants respectfully contend that claims 12, 14, 15, and 17-22 are allowable due the Allowability of claim 11.

Applicants have made a diligent effort to place the claims in condition for allowance. However, should there remain unresolved issues that require adverse action, it is respectfully

requested that the Examiner telephone Merle Richman, Applicants' Attorney at 858 320-2030 so that such issues may be resolved as expeditiously as possible.

For these reasons, and in view of the above amendments, this application is now considered to be in condition for allowance and such action is earnestly solicited.

Respectfully Submitted,

9/20/2015_____
Date

/mwresq/_____
Merle Richman
Patent Attorney
Reg. No. 38282

Merle Richman
Patent Attorney
Customer ID - 26338
PO Box 3333
La Jolla, CA 92038-3333

Tel. 858 551-2030

Doc Code: TRAN.LET
Document Description: Transmittal Letter

PTO/SB/21 (07-09)
Approved for use through 07/31/2012. OMB 0651-0031
U.S. Patent and Trademark Office; U.S. DEPARTMENT OF COMMERCE
Under the Paper Reduction Act of 1995, no persons are required to respond to a collection of information unless it displays a valid OMB control number.

TRANSMITTAL FORM *(to be used for all correspondence after initial filing)*		Application Number	13825083
		Filing Date	Mar 19, 2013
		First Named Inventor	Na, Jongju
		Art Unit	3733
		Examiner Name	David C. Comstock
Total Number of Pages in This Submission		Attorney Docket Number	NA001KR_PCTUS

ENCLOSURES ***(Check all that apply)***

- [ ] Fee Transmittal Form
  - [ ] Fee Attached
- [x] Amendment / Reply (8 pages)
  - [ ] After Final
  - [ ] Affidavits/declaration(s)
- [ ] Extension of Time Request
- [ ] Express Abandonment Request
- [ ] Information Disclosure Statement
- [ ] Certified Copy of Priority Document(s)
- [ ] Reply to Missing Parts/ Incomplete Application
  - [ ] Reply to Missing Parts under 37 CFR 1.52 or 1.53
- [ ] Drawing(s)
- [ ] Licensing-related Papers
- [ ] Petition
- [ ] Petition to Convert to a Provisional Application
- [ ] Power of Attorney, Revocation Change of Correspondence Address
- [ ] Terminal Disclaimer
- [ ] Request for Refund
- [ ] CD, Number of CD(s) _____
  - [ ] Landscape Table on CD
- [ ] After Allowance Communication to TC
- [ ] Appeal Communication to Board of Appeals and Interferences
- [ ] Appeal Communication to TC **(Appeal Notice, Brief, Reply Brief)**
- [ ] Proprietary Information
- [ ] Status Letter
- [ ] Other Enclosure(s) (please identify below):

Remarks

SIGNATURE OF APPLICANT, ATTORNEY, OR AGENT

Firm Name	Merle W. Richman, Cust ID - 26338		
Signature	/mwresq/		
Printed name	Merle Richman		
Date	September 20, 2015	Reg. No.	38282

CERTIFICATE OF TRANSMISSION/MAILING

I hereby certify that this correspondence is being electronically transmitted to the USPTO or deposited with the United States Postal Service with sufficient postage as first class mail in an envelope addressed to: Commissioner for Patents, P.O. Box 1450, Alexandria, VA 22313-1450 on the date shown below.

Signature	/mwresq/		
Typed or printed name	Merle Richman	Date	September 20, 2015

This collection of information is required by 37 CFR 1.5. The information is required to obtain or retain a benefit by the public which is to file (and by the USPTO to process) an application. Confidentiality is governed by 35 U.S.C. 122 and 37 CFR 1.11 and 1.14. This collection is estimated to take 2 hours to complete, including gathering, preparing, and submitting the completed application form to the USPTO. Time will vary depending upon the individual case. Any comments on the amount of time you require to complete this form and/or suggestions for reducing this burden, should be sent to the Chief Information Officer, U.S. Patent and Trademark Office, U.S. Department of Commerce, P.O. Box 1450, Alexandria, VA 22313-1450. DO NOT SEND FEES OR COMPLETED FORMS TO THIS ADDRESS. **SEND TO: Commissioner for Patents, P.O. Box 1450, Alexandria, VA 22313-1450.**

In you need assistance in completing the form, call 1-800-PTO-9199 and select option 2.

Electronic Acknowledgement Receipt

EFS ID:	23545541
Application Number:	13825083
International Application Number:	
Confirmation Number:	9850
Title of Invention:	METHOD, SYSTEM, AND APPARATUS FOR DERMALOGICAL TREATMENT
First Named Inventor/Applicant Name:	Jongju Na
Customer Number:	26338
Filer:	Merle W. Richman
Filer Authorized By:	
Attorney Docket Number:	NA001KR_PCTUS
Receipt Date:	20-SEP-2015
Filing Date:	20-JAN-2014
Time Stamp:	23:09:31
Application Type:	U.S. National Stage under 35 USC 371

Payment information:

Submitted with Payment	no

File Listing:

Document Number	Document Description	File Name	File Size(Bytes)/ Message Digest	Multi Part /.zip	Pages (if appl.)
1	Amendment/Req. Reconsideration-After Non-Final Reject	na001krpct-roa-2015-08-27.pdf	163694 87c56929a5078bde6f8c092a2915af1d0385559e	no	8

Warnings:

Information:

2	Transmittal Letter	na001krpct-roa-transmittal.pdf	176545 a4fbeac3846af104793be758efd796a1d7e52ada	no	1
Warnings:					
Information:					
			Total Files Size (in bytes):	340239	

This Acknowledgement Receipt evidences receipt on the noted date by the USPTO of the indicated documents, characterized by the applicant, and including page counts, where applicable. It serves as evidence of receipt similar to a Post Card, as described in MPEP 503.

<u>New Applications Under 35 U.S.C. 111</u>
If a new application is being filed and the application includes the necessary components for a filing date (see 37 CFR 1.53(b)-(d) and MPEP 506), a Filing Receipt (37 CFR 1.54) will be issued in due course and the date shown on this Acknowledgement Receipt will establish the filing date of the application.

<u>National Stage of an International Application under 35 U.S.C. 371</u>
If a timely submission to enter the national stage of an international application is compliant with the conditions of 35 U.S.C. 371 and other applicable requirements a Form PCT/DO/EO/903 indicating acceptance of the application as a national stage submission under 35 U.S.C. 371 will be issued in addition to the Filing Receipt, in due course.

<u>New International Application Filed with the USPTO as a Receiving Office</u>
If a new international application is being filed and the international application includes the necessary components for an international filing date (see PCT Article 11 and MPEP 1810), a Notification of the International Application Number and of the International Filing Date (Form PCT/RO/105) will be issued in due course, subject to prescriptions concerning national security, and the date shown on this Acknowledgement Receipt will establish the international filing date of the application.

PTO/SB/06 (09-11)
Approved for use through 1/31/2014. OMB 0651-0032
U.S. Patent and Trademark Office; U.S. DEPARTMENT OF COMMERCE
Under the Paperwork Reduction Act of 1995, no persons are required to respond to a collection of information unless it displays a valid OMB control number.

PATENT APPLICATION FEE DETERMINATION RECORD Substitute for Form PTO-875	Application or Docket Number 13/825,083	Filing Date 01/20/2014	☐ To be Mailed

ENTITY: ☐ LARGE ☒ SMALL ☐ MICRO

APPLICATION AS FILED – PART I

FOR	(Column 1) NUMBER FILED	(Column 2) NUMBER EXTRA	RATE ($)	FEE ($)
☐ BASIC FEE (37 CFR 1.16(a), (b), or (c))	N/A	N/A	N/A	
☐ SEARCH FEE (37 CFR 1.16(k), (i), or (m))	N/A	N/A	N/A	
☐ EXAMINATION FEE (37 CFR 1.16(o), (p), or (q))	N/A	N/A	N/A	
TOTAL CLAIMS (37 CFR 1.16(i))	minus 20 =	*	X $ =	
INDEPENDENT CLAIMS (37 CFR 1.16(h))	minus 3 =	*	X $ =	
☐ APPLICATION SIZE FEE (37 CFR 1.16(s))	If the specification and drawings exceed 100 sheets of paper, the application size fee due is $310 ($155 for small entity) for each additional 50 sheets or fraction thereof. See 35 U.S.C. 41(a)(1)(G) and 37 CFR 1.16(s).			
☐ MULTIPLE DEPENDENT CLAIM PRESENT (37 CFR 1.16(j))				
* If the difference in column 1 is less than zero, enter "0" in column 2.			TOTAL	

APPLICATION AS AMENDED – PART II

AMENDMENT

09/20/2015	(Column 1) CLAIMS REMAINING AFTER AMENDMENT		(Column 2) HIGHEST NUMBER PREVIOUSLY PAID FOR	(Column 3) PRESENT EXTRA	RATE ($)	ADDITIONAL FEE ($)
Total (37 CFR 1.16(i))	* 20	Minus	** 20	= 0	X $40 =	0
Independent (37 CFR 1.16(h))	* 2	Minus	***3	= 0	X $210 =	0
☐ Application Size Fee (37 CFR 1.16(s))						
☐ FIRST PRESENTATION OF MULTIPLE DEPENDENT CLAIM (37 CFR 1.16(j))						
					TOTAL ADD'L FEE	0

AMENDMENT

	(Column 1) CLAIMS REMAINING AFTER AMENDMENT		(Column 2) HIGHEST NUMBER PREVIOUSLY PAID FOR	(Column 3) PRESENT EXTRA	RATE ($)	ADDITIONAL FEE ($)
Total (37 CFR 1.16(i))	*	Minus	**	=	X $ =	
Independent (37 CFR 1.16(h))	*	Minus	***	=	X $ =	
☐ Application Size Fee (37 CFR 1.16(s))						
☐ FIRST PRESENTATION OF MULTIPLE DEPENDENT CLAIM (37 CFR 1.16(j))						
					TOTAL ADD'L FEE	

* If the entry in column 1 is less than the entry in column 2, write "0" in column 3.
** If the "Highest Number Previously Paid For" IN THIS SPACE is less than 20, enter "20".
*** If the "Highest Number Previously Paid For" IN THIS SPACE is less than 3, enter "3".
The "Highest Number Previously Paid For" (Total or Independent) is the highest number found in the appropriate box in column 1.

LIE
/SANDRA TUCKER SMITH/

This collection of information is required by 37 CFR 1.16. The information is required to obtain or retain a benefit by the public which is to file (and by the USPTO to process) an application. Confidentiality is governed by 35 U.S.C. 122 and 37 CFR 1.14. This collection is estimated to take 12 minutes to complete, including gathering, preparing, and submitting the completed application form to the USPTO. Time will vary depending upon the individual case. Any comments on the amount of time you require to complete this form and/or suggestions for reducing this burden, should be sent to the Chief Information Officer, U.S. Patent and Trademark Office, U.S. Department of Commerce, P.O. Box 1450, Alexandria, VA 22313-1450. DO NOT SEND FEES OR COMPLETED FORMS TO THIS ADDRESS. **SEND TO: Commissioner for Patents, P.O. Box 1450, Alexandria, VA 22313-1450.**
If you need assistance in completing the form, call 1-800-PTO-9199 and select option 2.

UNITED STATES PATENT AND TRADEMARK OFFICE

UNITED STATES DEPARTMENT OF COMMERCE
United States Patent and Trademark Office
Address: COMMISSIONER FOR PATENTS
P.O. Box 1450
Alexandria, Virginia 22313-1450
www.uspto.gov

NOTICE OF ALLOWANCE AND FEE(S) DUE

26338 7590 01/14/2016
MERLE W. RICHMAN, III
P.O. BOX 3333
LA JOLLA, CA 92038

EXAMINER
COMSTOCK, DAVID C

ART UNIT	PAPER NUMBER
3733	

DATE MAILED: 01/14/2016

APPLICATION NO.	FILING DATE	FIRST NAMED INVENTOR	ATTORNEY DOCKET NO.	CONFIRMATION NO.
13/825,083	01/20/2014	Jongju Na	NA001KR_PCTUS	9850

TITLE OF INVENTION: METHOD, SYSTEM, AND APPARATUS FOR DERMALOGICAL TREATMENT

APPLN. TYPE	ENTITY STATUS	ISSUE FEE DUE	PUBLICATION FEE DUE	PREV. PAID ISSUE FEE	TOTAL FEE(S) DUE	DATE DUE
nonprovisional	SMALL	$480	$0	$0	$480	04/14/2016

THE APPLICATION IDENTIFIED ABOVE HAS BEEN EXAMINED AND IS ALLOWED FOR ISSUANCE AS A PATENT. PROSECUTION ON THE MERITS IS CLOSED. THIS NOTICE OF ALLOWANCE IS NOT A GRANT OF PATENT RIGHTS. THIS APPLICATION IS SUBJECT TO WITHDRAWAL FROM ISSUE AT THE INITIATIVE OF THE OFFICE OR UPON PETITION BY THE APPLICANT. SEE 37 CFR 1.313 AND MPEP 1308.

THE ISSUE FEE AND PUBLICATION FEE (IF REQUIRED) MUST BE PAID WITHIN THREE MONTHS FROM THE MAILING DATE OF THIS NOTICE OR THIS APPLICATION SHALL BE REGARDED AS ABANDONED. THIS STATUTORY PERIOD CANNOT BE EXTENDED. SEE 35 U.S.C. 151. THE ISSUE FEE DUE INDICATED ABOVE DOES NOT REFLECT A CREDIT FOR ANY PREVIOUSLY PAID ISSUE FEE IN THIS APPLICATION. IF AN ISSUE FEE HAS PREVIOUSLY BEEN PAID IN THIS APPLICATION (AS SHOWN ABOVE), THE RETURN OF PART B OF THIS FORM WILL BE CONSIDERED A REQUEST TO REAPPLY THE PREVIOUSLY PAID ISSUE FEE TOWARD THE ISSUE FEE NOW DUE.

HOW TO REPLY TO THIS NOTICE:

I. Review the ENTITY STATUS shown above. If the ENTITY STATUS is shown as SMALL or MICRO, verify whether entitlement to that entity status still applies.

If the ENTITY STATUS is the same as shown above, pay the TOTAL FEE(S) DUE shown above.

If the ENTITY STATUS is changed from that shown above, on PART B - FEE(S) TRANSMITTAL, complete section number 5 titled "Change in Entity Status (from status indicated above)".

For purposes of this notice, small entity fees are 1/2 the amount of undiscounted fees, and micro entity fees are 1/2 the amount of small entity fees.

II. PART B - FEE(S) TRANSMITTAL, or its equivalent, must be completed and returned to the United States Patent and Trademark Office (USPTO) with your ISSUE FEE and PUBLICATION FEE (if required). If you are charging the fee(s) to your deposit account, section "4b" of Part B - Fee(s) Transmittal should be completed and an extra copy of the form should be submitted. If an equivalent of Part B is filed, a request to reapply a previously paid issue fee must be clearly made, and delays in processing may occur due to the difficulty in recognizing the paper as an equivalent of Part B.

III. All communications regarding this application must give the application number. Please direct all communications prior to issuance to Mail Stop ISSUE FEE unless advised to the contrary.

IMPORTANT REMINDER: Utility patents issuing on applications filed on or after Dec. 12, 1980 may require payment of maintenance fees. It is patentee's responsibility to ensure timely payment of maintenance fees when due.

PTOL-85 (Rev. 02/11)

PART B - FEE(S) TRANSMITTAL

Complete and send this form, together with applicable fee(s), to: Mail **Mail Stop ISSUE FEE**
Commissioner for Patents
P.O. Box 1450
Alexandria, Virginia 22313-1450
or Fax (571)-273-2885

INSTRUCTIONS: This form should be used for transmitting the ISSUE FEE and PUBLICATION FEE (if required). Blocks 1 through 5 should be completed where appropriate. All further correspondence including the Patent, advance orders and notification of maintenance fees will be mailed to the current correspondence address as indicated unless corrected below or directed otherwise in Block 1, by (a) specifying a new correspondence address; and/or (b) indicating a separate "FEE ADDRESS" for maintenance fee notifications.

CURRENT CORRESPONDENCE ADDRESS (Note: Use Block 1 for any change of address)

26338 7590 01/14/2016
MERLE W. RICHMAN, III
P.O. BOX 3333
LA JOLLA, CA 92038

Note: A certificate of mailing can only be used for domestic mailings of the Fee(s) Transmittal. This certificate cannot be used for any other accompanying papers. Each additional paper, such as an assignment or formal drawing, must have its own certificate of mailing or transmission.

Certificate of Mailing or Transmission
I hereby certify that this Fee(s) Transmittal is being deposited with the United States Postal Service with sufficient postage for first class mail in an envelope addressed to the Mail Stop ISSUE FEE address above, or being facsimile transmitted to the USPTO (571) 273-2885, on the date indicated below.

(Depositor's name)
(Signature)
(Date)

APPLICATION NO.	FILING DATE	FIRST NAMED INVENTOR	ATTORNEY DOCKET NO.	CONFIRMATION NO.
13/825,083	01/20/2014	Jongju Na	NA001KR_PCTUS	9850

TITLE OF INVENTION: METHOD, SYSTEM, AND APPARATUS FOR DERMALOGICAL TREATMENT

APPLN. TYPE	ENTITY STATUS	ISSUE FEE DUE	PUBLICATION FEE DUE	PREV. PAID ISSUE FEE	TOTAL FEE(S) DUE	DATE DUE
nonprovisional	SMALL	$480	$0	$0	$480	04/14/2016

EXAMINER	ART UNIT	CLASS-SUBCLASS
COMSTOCK, DAVID C	3733	600-249000

1. Change of correspondence address or indication of "Fee Address" (37 CFR 1.363).
- ❑ Change of correspondence address (or Change of Correspondence Address form PTO/SB/122) attached.
- ❑ "Fee Address" indication (or "Fee Address" Indication form PTO/SB/47; Rev 03-02 or more recent) attached. **Use of a Customer Number is required.**

2. For printing on the patent front page, list
(1) The names of up to 3 registered patent attorneys or agents OR, alternatively,
(2) The name of a single firm (having as a member a registered attorney or agent) and the names of up to 2 registered patent attorneys or agents. If no name is listed, no name will be printed.
1_____
2_____
3_____

3. ASSIGNEE NAME AND RESIDENCE DATA TO BE PRINTED ON THE PATENT (print or type)

PLEASE NOTE: Unless an assignee is identified below, no assignee data will appear on the patent. If an assignee is identified below, the document has been filed for recordation as set forth in 37 CFR 3.11. Completion of this form is NOT a substitute for filing an assignment.

(A) NAME OF ASSIGNEE (B) RESIDENCE: (CITY and STATE OR COUNTRY)

Please check the appropriate assignee category or categories (will not be printed on the patent) : ❑ Individual ❑ Corporation or other private group entity ❑ Government

4a. The following fee(s) are submitted:
- ❑ Issue Fee
- ❑ Publication Fee (No small entity discount permitted)
- ❑ Advance Order - # of Copies _____

4b. Payment of Fee(s): **(Please first reapply any previously paid issue fee shown above)**
- ❑ A check is enclosed.
- ❑ Payment by credit card. Form PTO-2038 is attached.
- ❑ The director is hereby authorized to charge the required fee(s), any deficiency, or credits any overpayment, to Deposit Account Number _____ (enclose an extra copy of this form).

5. **Change in Entity Status** (from status indicated above)
- ❑ Applicant certifying micro entity status. See 37 CFR 1.29 — NOTE: Absent a valid certification of Micro Entity Status (see forms PTO/SB/15A and 15B), issue fee payment in the micro entity amount will not be accepted at the risk of application abandonment.
- ❑ Applicant asserting small entity status. See 37 CFR 1.27 — NOTE: If the application was previously under micro entity status, checking this box will be taken to be a notification of loss of entitlement to micro entity status.
- ❑ Applicant changing to regular undiscounted fee status. — NOTE: Checking this box will be taken to be a notification of loss of entitlement to small or micro entity status, as applicable.

NOTE: This form must be signed in accordance with 37 CFR 1.31 and 1.33. See 37 CFR 1.4 for signature requirements and certifications.

Authorized Signature _____ Date _____

Typed or printed name _____ Registration No. _____

PTOL-85 Part B (10-13) Approved for use through 10/31/2013. OMB 0651-0033 U.S. Patent and Trademark Office; U.S. DEPARTMENT OF COMMERCE

UNITED STATES PATENT AND TRADEMARK OFFICE

UNITED STATES DEPARTMENT OF COMMERCE
United States Patent and Trademark Office
Address: COMMISSIONER FOR PATENTS
P.O. Box 1450
Alexandria, Virginia 22313-1450
www.uspto.gov

APPLICATION NO.	FILING DATE	FIRST NAMED INVENTOR	ATTORNEY DOCKET NO.	CONFIRMATION NO.
13/825,083	01/20/2014	Jongju Na	NA001KR_PCTUS	9850

26338 7590 01/14/2016
MERLE W. RICHMAN, III
P.O. BOX 3333
LA JOLLA, CA 92038

EXAMINER
COMSTOCK, DAVID C

ART UNIT	PAPER NUMBER
3733	

DATE MAILED: 01/14/2016

Determination of Patent Term Adjustment under 35 U.S.C. 154 (b)
(Applications filed on or after May 29, 2000)

The Office has discontinued providing a Patent Term Adjustment (PTA) calculation with the Notice of Allowance.

Section 1(h)(2) of the AIA Technical Corrections Act amended 35 U.S.C. 154(b)(3)(B)(i) to eliminate the requirement that the Office provide a patent term adjustment determination with the notice of allowance. See Revisions to Patent Term Adjustment, 78 Fed. Reg. 19416, 19417 (Apr. 1, 2013). Therefore, the Office is no longer providing an initial patent term adjustment determination with the notice of allowance. The Office will continue to provide a patent term adjustment determination with the Issue Notification Letter that is mailed to applicant approximately three weeks prior to the issue date of the patent, and will include the patent term adjustment on the patent. Any request for reconsideration of the patent term adjustment determination (or reinstatement of patent term adjustment) should follow the process outlined in 37 CFR 1.705.

Any questions regarding the Patent Term Extension or Adjustment determination should be directed to the Office of Patent Legal Administration at (571)-272-7702. Questions relating to issue and publication fee payments should be directed to the Customer Service Center of the Office of Patent Publication at 1-(888)-786-0101 or (571)-272-4200.

OMB Clearance and PRA Burden Statement for PTOL-85 Part B

The Paperwork Reduction Act (PRA) of 1995 requires Federal agencies to obtain Office of Management and Budget approval before requesting most types of information from the public. When OMB approves an agency request to collect information from the public, OMB (i) provides a valid OMB Control Number and expiration date for the agency to display on the instrument that will be used to collect the information and (ii) requires the agency to inform the public about the OMB Control Number's legal significance in accordance with 5 CFR 1320.5(b).

The information collected by PTOL-85 Part B is required by 37 CFR 1.311. The information is required to obtain or retain a benefit by the public which is to file (and by the USPTO to process) an application. Confidentiality is governed by 35 U.S.C. 122 and 37 CFR 1.14. This collection is estimated to take 12 minutes to complete, including gathering, preparing, and submitting the completed application form to the USPTO. Time will vary depending upon the individual case. Any comments on the amount of time you require to complete this form and/or suggestions for reducing this burden, should be sent to the Chief Information Officer, U.S. Patent and Trademark Office, U.S. Department of Commerce, P.O. Box 1450, Alexandria, Virginia 22313-1450. DO NOT SEND FEES OR COMPLETED FORMS TO THIS ADDRESS. SEND TO: Commissioner for Patents, P.O. Box 1450, Alexandria, Virginia 22313-1450. Under the Paperwork Reduction Act of 1995, no persons are required to respond to a collection of information unless it displays a valid OMB control number.

Privacy Act Statement

The Privacy Act of 1974 (P.L. 93-579) requires that you be given certain information in connection with your submission of the attached form related to a patent application or patent. Accordingly, pursuant to the requirements of the Act, please be advised that: (1) the general authority for the collection of this information is 35 U.S.C. 2(b)(2); (2) furnishing of the information solicited is voluntary; and (3) the principal purpose for which the information is used by the U.S. Patent and Trademark Office is to process and/or examine your submission related to a patent application or patent. If you do not furnish the requested information, the U.S. Patent and Trademark Office may not be able to process and/or examine your submission, which may result in termination of proceedings or abandonment of the application or expiration of the patent.

The information provided by you in this form will be subject to the following routine uses:

1. The information on this form will be treated confidentially to the extent allowed under the Freedom of Information Act (5 U.S.C. 552) and the Privacy Act (5 U.S.C 552a). Records from this system of records may be disclosed to the Department of Justice to determine whether disclosure of these records is required by the Freedom of Information Act.
2. A record from this system of records may be disclosed, as a routine use, in the course of presenting evidence to a court, magistrate, or administrative tribunal, including disclosures to opposing counsel in the course of settlement negotiations.
3. A record in this system of records may be disclosed, as a routine use, to a Member of Congress submitting a request involving an individual, to whom the record pertains, when the individual has requested assistance from the Member with respect to the subject matter of the record.
4. A record in this system of records may be disclosed, as a routine use, to a contractor of the Agency having need for the information in order to perform a contract. Recipients of information shall be required to comply with the requirements of the Privacy Act of 1974, as amended, pursuant to 5 U.S.C. 552a(m).
5. A record related to an International Application filed under the Patent Cooperation Treaty in this system of records may be disclosed, as a routine use, to the International Bureau of the World Intellectual Property Organization, pursuant to the Patent Cooperation Treaty.
6. A record in this system of records may be disclosed, as a routine use, to another federal agency for purposes of National Security review (35 U.S.C. 181) and for review pursuant to the Atomic Energy Act (42 U.S.C. 218(c)).
7. A record from this system of records may be disclosed, as a routine use, to the Administrator, General Services, or his/her designee, during an inspection of records conducted by GSA as part of that agency's responsibility to recommend improvements in records management practices and programs, under authority of 44 U.S.C. 2904 and 2906. Such disclosure shall be made in accordance with the GSA regulations governing inspection of records for this purpose, and any other relevant (i.e., GSA or Commerce) directive. Such disclosure shall not be used to make determinations about individuals.
8. A record from this system of records may be disclosed, as a routine use, to the public after either publication of the application pursuant to 35 U.S.C. 122(b) or issuance of a patent pursuant to 35 U.S.C. 151. Further, a record may be disclosed, subject to the limitations of 37 CFR 1.14, as a routine use, to the public if the record was filed in an application which became abandoned or in which the proceedings were terminated and which application is referenced by either a published application, an application open to public inspection or an issued patent.
9. A record from this system of records may be disclosed, as a routine use, to a Federal, State, or local law enforcement agency, if the USPTO becomes aware of a violation or potential violation of law or regulation.

Notice of Allowability	Application No. 13/825,083	Applicant(s) NA, JONGJU	
	Examiner DAVID C. COMSTOCK	Art Unit 3733	AIA (First Inventor to File) Status No

-- The MAILING DATE of this communication appears on the cover sheet with the correspondence address--

All claims being allowable, PROSECUTION ON THE MERITS IS (OR REMAINS) CLOSED in this application. If not included herewith (or previously mailed), a Notice of Allowance (PTOL-85) or other appropriate communication will be mailed in due course. **THIS NOTICE OF ALLOWABILITY IS NOT A GRANT OF PATENT RIGHTS.** This application is subject to withdrawal from issue at the initiative of the Office or upon petition by the applicant. See 37 CFR 1.313 and MPEP 1308.

1. ☒ This communication is responsive to *amendment filed 20 September 2015*.
   ☐ A declaration(s)/affidavit(s) under **37 CFR 1.130(b)** was/were filed on_____.
2. ☐ An election was made by the applicant in response to a restriction requirement set forth during the interview on _____; the restriction requirement and election have been incorporated into this action.
3. ☒ The allowed claim(s) is/are *1,2,4,5,7-12,14,15 and 17-24*. As a result of the allowed claim(s), you may be eligible to benefit from the **Patent Prosecution Highway** program at a participating intellectual property office for the corresponding application. For more information, please see http://www.uspto.gov/patents/init_events/pph/index.jsp or send an inquiry to PPHfeedback@uspto.gov .
4. ☒ Acknowledgment is made of a claim for foreign priority under 35 U.S.C. § 119(a)-(d) or (f).

   Certified copies:

   a) ☒ All b) ☐ Some *c) ☐ None of the:
   1. ☐ Certified copies of the priority documents have been received.
   2. ☐ Certified copies of the priority documents have been received in Application No. _____ .
   3. ☒ Copies of the certified copies of the priority documents have been received in this national stage application from the International Bureau (PCT Rule 17.2(a)).

   * Certified copies not received: _____.

Applicant has THREE MONTHS FROM THE "MAILING DATE" of this communication to file a reply complying with the requirements noted below. Failure to timely comply will result in ABANDONMENT of this application.
THIS THREE-MONTH PERIOD IS NOT EXTENDABLE.

5. ☐ CORRECTED DRAWINGS (as "replacement sheets") must be submitted.
   ☐ including changes required by the attached Examiner's Amendment / Comment or in the Office action of Paper No./Mail Date _____.

   Identifying indicia such as the application number (see 37 CFR 1.84(c)) should be written on the drawings in the front (not the back) of each sheet. Replacement sheet(s) should be labeled as such in the header according to 37 CFR 1.121(d).
6. ☐ DEPOSIT OF and/or INFORMATION about the deposit of BIOLOGICAL MATERIAL must be submitted. Note the attached Examiner's comment regarding REQUIREMENT FOR THE DEPOSIT OF BIOLOGICAL MATERIAL.

Attachment(s)

1. ☐ Notice of References Cited (PTO-892)
2. ☐ Information Disclosure Statements (PTO/SB/08), Paper No./Mail Date _____
3. ☐ Examiner's Comment Regarding Requirement for Deposit of Biological Material
4. ☐ Interview Summary (PTO-413), Paper No./Mail Date _____ .
5. ☐ Examiner's Amendment/Comment
6. ☐ Examiner's Statement of Reasons for Allowance
7. ☐ Other _____.

/DAVID C COMSTOCK/ Examiner, Art Unit 3733	/JERRY CUMBERLEDGE/ Primary Examiner, Art Unit 3733

UNITED STATES PATENT AND TRADEMARK OFFICE

UNITED STATES DEPARTMENT OF COMMERCE
United States Patent and Trademark Office
Address: COMMISSIONER FOR PATENTS
P.O. Box 1450
Alexandria, Virginia 22313-1450
www.uspto.gov

BIB DATA SHEET

CONFIRMATION NO. 9850

SERIAL NUMBER	FILING or 371(c) DATE	CLASS	GROUP ART UNIT	ATTORNEY DOCKET NO.
13/825,083	01/20/2014 **RULE**	600	3733	NA001KR_PCTUS

APPLICANTS

INVENTORS

Jongju Na, Songpa-Gu, KOREA, REPUBLIC OF;

**** CONTINUING DATA ****************************

This application is a 371 of PCT/KR2012/001335 02/22/2012
which claims benefit of 61/449,080 03/03/2011
and is a CON of 13/060,274 03/30/2011 PAT 8979912

**** FOREIGN APPLICATIONS ****************************

**** IF REQUIRED, FOREIGN FILING LICENSE GRANTED **** ** SMALL ENTITY **
01/23/2014

Foreign Priority claimed ☑ Yes ☐ No 35 USC 119(a-d) conditions met ☑ Yes ☐ No Verified and Acknowledged /DAVID C COMSTOCK/ Examiner's Signature	☐ Met after Allowance Initials	**STATE OR COUNTRY**	**SHEETS DRAWINGS**	**TOTAL CLAIMS**	**INDEPENDENT CLAIMS**
		KOREA, REPUBLIC OF	21	20	2

ADDRESS

MERLE W. RICHMAN, III
P.O. BOX 3333
LA JOLLA, CA 92038
UNITED STATES

TITLE

METHOD, SYSTEM, AND APPARATUS FOR DERMALOGICAL TREATMENT

FILING FEE RECEIVED 880	FEES: Authority has been given in Paper No._____ to charge/credit DEPOSIT ACCOUNT No._____ for following:	☐ All Fees ☐ 1.16 Fees (Filing) ☐ 1.17 Fees (Processing Ext. of time) ☐ 1.18 Fees (Issue) ☐ Other _____ ☐ Credit

EAST Search History

EAST Search History (Prior Art)

Ref #	Hits	Search Query	DBs	Default Operator	Plurals	Time Stamp
L1	12541	((600/249) or (601/2) or (604/20,21,46,117) or (606/9) or (607/102,189) or (424/1.11)).CCLS.	US-PGPUB; USPAT; USOCR	OR	OFF	2015/12/30 13:39
L2	2092	A61B17/320068.cpc.	US-PGPUB; USPAT; USOCR	OR	OFF	2015/12/30 13:40
L3	765	A61B1/06,20.cpc.	US-PGPUB; USPAT; USOCR	OR	OFF	2015/12/30 13:40
L4	1036	A61N1/30.cpc.	US-PGPUB; USPAT; USOCR	OR	OFF	2015/12/30 13:40
L5	1433	A61N5/0616.cpc.	US-PGPUB; USPAT; USOCR	OR	OFF	2015/12/30 13:40
L6	2634	A61M37/00,0015.cpc.	US-PGPUB; USPAT; USOCR	OR	OFF	2015/12/30 13:40
L7	1037	A61M2037/0007,0046,0061.cpc.	US-PGPUB; USPAT; USOCR	OR	OFF	2015/12/30 13:41
L8	676	(needle same motor) and (dermalogical or dermatological or dermis or skin) and electric$3 and (led or "l.e.d." or "light emitting diode")	US-PGPUB; USPAT; USOCR	OR	OFF	2015/12/30 13:41
L9	472	(1 2 3 4 5 6 7 8) and @pd>"20150823"	US-PGPUB; USPAT; USOCR	OR	OFF	2015/12/30 13:42

EAST Search History (Interference)

Ref #	Hits	Search Query	DBs	Default Operator	Plurals	Time Stamp
L10	1	(treating and dermatological and tissue and releasably and couplable and deployable and needle and assembly and surface and holdable and mechanically and separatably and electrical and conductor and restorably and deflectable and contact and communicating and signals and extendable and energizing and motor and signal and generator).clm.	US-PGPUB; USPAT	OR	OFF	2015/12/30 13:59

12/30/2015 2:01:21 PM
C:\Users\dcomstock\Documents\EAST\Workspaces\default.wsp

Search Notes	Application/Control No.	Applicant(s)/Patent Under Reexamination
	13825083	NA, JONGJU
	Examiner	**Art Unit**
	DAVID C COMSTOCK	3733

CPC- SEARCHED

Symbol	Date	Examiner
A61B17/320068	8/24/2015	/DC/
A61B1/06,20	8/24/2015	/DC/
A61N1/30	8/24/2015	/DC/
A61N5/0616	8/24/2015	/DC/
A61M37/00,0015	8/24/2015	/DC/
A61M2037/0007,0046,0061	8/24/2015	/DC/
Search updated	12/30/2015	/DC/

CPC COMBINATION SETS - SEARCHED

Symbol	Date	Examiner

US CLASSIFICATION SEARCHED

Class	Subclass	Date	Examiner
600	249	8/24/2015	/DC/
601	2	8/24/2015	/DC/
604	20,21,46,117	8/24/2015	/DC/
606	9	8/24/2015	/DC/
607	102,189	8/24/2015	/DC/
424	1.11	8/24/2015	/DC/
Search updated		12/30/2015	/DC/

SEARCH NOTES

Search Notes	Date	Examiner
EAST text search--see printout	8/24/2015	/DC/
Inventor name search--see printout	8/24/2015	/DC/
EAST text search updated--see printout	12/30/2015	/DC/

/DAVID C COMSTOCK/ Examiner.Art Unit 3733	

INTERFERENCE SEARCH			
US Class/ CPC Symbol	**US Subclass / CPC Group**	**Date**	**Examiner**
See interference search history printout		12/30/2015	/DC/

/DAVID C COMSTOCK/ Examiner.Art Unit 3733	

Issue Classification	Application/Control No.	Applicant(s)/Patent Under Reexamination
	13825083	NA, JONGJU
	Examiner	**Art Unit**
	DAVID C COMSTOCK	3733

CPC						
Symbol					**Type**	**Version**
A61B		17	/	320068	F	2013-01-01
A61N		1	/	30	I	2013-01-01
A61M		37	/	0015	A	2013-01-01
A61M		2037	/	0007	A	2013-01-01
A61M		2037	/	0046	A	2013-01-01
A61M		2037	/	0061	A	2013-01-01
A61B		1	/	06	I	2013-01-01
A61M		37	/	00	I	2013-01-01
			/			
			/			
			/			
			/			
			/			
			/			
			/			

CPC Combination Sets							
Symbol				**Type**	**Set**	**Ranking**	**Version**
			/				
			/				

/DAVID C COMSTOCK/ Examiner.Art Unit 3733 (Assistant Examiner)	12/30/15 (Date)	**Total Claims Allowed:** 20	
/JERRY CUMBERLEDGE/ Primary Examiner.Art Unit 3733 (Primary Examiner)	12/31/2015 (Date)	O.G. Print Claim(s) 1	O.G. Print Figure 9C

Issue Classification	Application/Control No.	Applicant(s)/Patent Under Reexamination
	13825083	NA, JONGJU
	Examiner	**Art Unit**
	DAVID C COMSTOCK	3733

US ORIGINAL CLASSIFICATION		INTERNATIONAL CLASSIFICATION										
CLASS	SUBCLASS	CLAIMED					NON-CLAIMED					
600	249	A	6	1	B	1 / 06 (2006.01.01)						

CROSS REFERENCE(S)					
CLASS	SUBCLASS (ONE SUBCLASS PER BLOCK)				

/DAVID C COMSTOCK/ Examiner.Art Unit 3733 (Assistant Examiner)	12/30/15 (Date)	**Total Claims Allowed:** 20
/JERRY CUMBERLEDGE/ Primary Examiner.Art Unit 3733 (Primary Examiner)	12/31/2015 (Date)	O.G. Print Claim(s) 1 / O.G. Print Figure 9C

Issue Classification	Application/Control No.	Applicant(s)/Patent Under Reexamination
	13825083	NA, JONGJU
	Examiner	**Art Unit**
	DAVID C COMSTOCK	3733

☐ Claims renumbered in the same order as presented by applicant ☐ CPA ☐ T.D. ☐ R.1.47

Final	Original	Final	Original	Final	Original	Final	Original	Final	Original	Final	Original	Final	Original	Final	Original
1	1	16	17												
2	2	15	18												
	3	17	19												
3	4	18	20												
4	5	19	21												
	6	20	22												
6	7	9	23												
5	8	10	24												
7	9														
8	10														
11	11														
12	12														
	13														
13	14														
14	15														
	16														

/DAVID C COMSTOCK/ Examiner.Art Unit 3733 (Assistant Examiner)	12/30/15 (Date)	**Total Claims Allowed:** 20	
/JERRY CUMBERLEDGE/ Primary Examiner.Art Unit 3733 (Primary Examiner)	12/31/2015 (Date)	O.G. Print Claim(s) 1	O.G. Print Figure 9C

Index of Claims	Application/Control No.	Applicant(s)/Patent Under Reexamination
	13825083	NA, JONGJU
	Examiner	**Art Unit**
	DAVID C COMSTOCK	3733

✓	Rejected	-	Cancelled	N	Non-Elected	A	Appeal
=	Allowed	÷	Restricted	I	Interference	O	Objected

☐ Claims renumbered in the same order as presented by applicant ☐ CPA ☐ T.D. ☐ R.1.47

CLAIM		DATE								
Final	Original	08/24/2015	12/30/2015							
1	1	✓	=							
2	2	✓	=							
	3	✓	-							
3	4	✓	=							
4	5	✓	=							
	6	O	-							
6	7	O	=							
5	8	✓	=							
7	9	O	=							
8	10	✓	=							
11	11	✓	=							
12	12	✓	=							
	13	✓	-							
13	14	✓	=							
14	15	✓	=							
	16	O	-							
16	17	O	=							
15	18	✓	=							
17	19	O	=							
18	20	✓	=							
19	21	✓	=							
20	22	✓	=							
9	23	✓	=							
10	24	✓	=							

PALM INTRANET

Day : Monday
Date: 8/24/2015
Time: 11:42:32

Inventor Name Search

Enter the first few letters of the Inventor's Last Name.
Additionally, enter the first few letters of the Inventor's First name.

Last Name	First Name	
na	jongju	Search

To Go BACK Use BACK Button on Your BROWSER Tool Bar
Back to PALM | ASSIGNMENT | OASIS | Home page

UNITED STATES PATENT AND TRADEMARK OFFICE

UNITED STATES DEPARTMENT OF COMMERCE
United States Patent and Trademark Office
Address: COMMISSIONER FOR PATENTS
P.O. Box 1450
Alexandria, Virginia 22313-1450
www.uspto.gov

APPLICATION NUMBER	FILING or 371(c) DATE	GRP ART UNIT	FIL FEE REC'D	ATTY.DOCKET.NO	TOT CLAIMS	IND CLAIMS
13/825,083	01/20/2014	3733	880	NA001KR_PCTUS	20	2

CONFIRMATION NO. 9850

CORRECTED FILING RECEIPT

26338
MERLE W. RICHMAN, III
P.O. BOX 3333
LA JOLLA, CA 92038

OC000000008001350

Date Mailed: 01/20/2016

Receipt is acknowledged of this non-provisional patent application. The application will be taken up for examination in due course. Applicant will be notified as to the results of the examination. Any correspondence concerning the application must include the following identification information: the U.S. APPLICATION NUMBER, FILING DATE, NAME OF APPLICANT, and TITLE OF INVENTION. Fees transmitted by check or draft are subject to collection. Please verify the accuracy of the data presented on this receipt. **If an error is noted on this Filing Receipt, please submit a written request for a Filing Receipt Correction. Please provide a copy of this Filing Receipt with the changes noted thereon. If you received a "Notice to File Missing Parts" for this application, please submit any corrections to this Filing Receipt with your reply to the Notice. When the USPTO processes the reply to the Notice, the USPTO will generate another Filing Receipt incorporating the requested corrections**

Inventor(s)

Jongju Na, Songpa-Gu, KOREA, REPUBLIC OF;

Applicant(s)

Jongju Na, Songpa-Gu, KOREA, REPUBLIC OF;

Power of Attorney: None

Domestic Priority data as claimed by applicant

This application is a 371 of PCT/KR2012/001335 02/22/2012
which claims benefit of 61/449,080 03/03/2011
and is a CON of 13/060,274 03/30/2011 PAT 8979912

Foreign Applications for which priority is claimed (You may be eligible to benefit from the **Patent Prosecution Highway** program at the USPTO. Please see http://www.uspto.gov for more information.) - None.
Foreign application information must be provided in an Application Data Sheet in order to constitute a claim to foreign priority. See 37 CFR 1.55 and 1.76.

Permission to Access Application via Priority Document Exchange: No

Permission to Access Search Results: No

Applicant may provide or rescind an authorization for access using Form PTO/SB/39 or Form PTO/SB/69 as appropriate.

If Required, Foreign Filing License Granted: 01/23/2014

The country code and number of your priority application, to be used for filing abroad under the Paris Convention, is **US 13/825,083**

Projected Publication Date: Not Applicable

Non-Publication Request: No

Early Publication Request: No
**** SMALL ENTITY ****
Title

METHOD, SYSTEM, AND APPARATUS FOR DERMATOLOGICAL TREATMENT

Preliminary Class

600

Statement under 37 CFR 1.55 or 1.78 for AIA (First Inventor to File) Transition Applications: No

PROTECTING YOUR INVENTION OUTSIDE THE UNITED STATES

Since the rights granted by a U.S. patent extend only throughout the territory of the United States and have no effect in a foreign country, an inventor who wishes patent protection in another country must apply for a patent in a specific country or in regional patent offices. Applicants may wish to consider the filing of an international application under the Patent Cooperation Treaty (PCT). An international (PCT) application generally has the same effect as a regular national patent application in each PCT-member country. The PCT process **simplifies** the filing of patent applications on the same invention in member countries, but **does not result** in a grant of "an international patent" and does not eliminate the need of applicants to file additional documents and fees in countries where patent protection is desired.

Almost every country has its own patent law, and a person desiring a patent in a particular country must make an application for patent in that country in accordance with its particular laws. Since the laws of many countries differ in various respects from the patent law of the United States, applicants are advised to seek guidance from specific foreign countries to ensure that patent rights are not lost prematurely.

Applicants also are advised that in the case of inventions made in the United States, the Director of the USPTO must issue a license before applicants can apply for a patent in a foreign country. The filing of a U.S. patent application serves as a request for a foreign filing license. The application's filing receipt contains further information and guidance as to the status of applicant's license for foreign filing.

Applicants may wish to consult the USPTO booklet, "General Information Concerning Patents" (specifically, the section entitled "Treaties and Foreign Patents") for more information on timeframes and deadlines for filing foreign patent applications. The guide is available either by contacting the USPTO Contact Center at 800-786-9199, or it can be viewed on the USPTO website at http://www.uspto.gov/web/offices/pac/doc/general/index.html.

For information on preventing theft of your intellectual property (patents, trademarks and copyrights), you may wish to consult the U.S. Government website, http://www.stopfakes.gov. Part of a Department of Commerce initiative, this website includes self-help "toolkits" giving innovators guidance on how to protect intellectual property in specific countries such as China, Korea and Mexico. For questions regarding patent enforcement issues, applicants may call the U.S. Government hotline at 1-866-999-HALT (1-866-999-4258).

LICENSE FOR FOREIGN FILING UNDER

Title 35, United States Code, Section 184

Title 37, Code of Federal Regulations, 5.11 & 5.15

GRANTED

The applicant has been granted a license under 35 U.S.C. 184, if the phrase "IF REQUIRED, FOREIGN FILING LICENSE GRANTED" followed by a date appears on this form. Such licenses are issued in all applications where the conditions for issuance of a license have been met, regardless of whether or not a license may be required as set forth in 37 CFR 5.15. The scope and limitations of this license are set forth in 37 CFR 5.15(a) unless an earlier license has been issued under 37 CFR 5.15(b). The license is subject to revocation upon written notification. The date indicated is the effective date of the license, unless an earlier license of similar scope has been granted under 37 CFR 5.13 or 5.14.

This license is to be retained by the licensee and may be used at any time on or after the effective date thereof unless it is revoked. This license is automatically transferred to any related applications(s) filed under 37 CFR 1.53(d). This license is not retroactive.

The grant of a license does not in any way lessen the responsibility of a licensee for the security of the subject matter as imposed by any Government contract or the provisions of existing laws relating to espionage and the national security or the export of technical data. Licensees should apprise themselves of current regulations especially with respect to certain countries, of other agencies, particularly the Office of Defense Trade Controls, Department of State (with respect to Arms, Munitions and Implements of War (22 CFR 121-128)); the Bureau of Industry and Security, Department of Commerce (15 CFR parts 730-774); the Office of Foreign AssetsControl, Department of Treasury (31 CFR Parts 500+) and the Department of Energy.

NOT GRANTED

No license under 35 U.S.C. 184 has been granted at this time, if the phrase "IF REQUIRED, FOREIGN FILING LICENSE GRANTED" DOES NOT appear on this form. Applicant may still petition for a license under 37 CFR 5.12, if a license is desired before the expiration of 6 months from the filing date of the application. If 6 months has lapsed from the filing date of this application and the licensee has not received any indication of a secrecy order under 35 U.S.C. 181, the licensee may foreign file the application pursuant to 37 CFR 5.15(b).

SelectUSA

The United States represents the largest, most dynamic marketplace in the world and is an unparalleled location for business investment, innovation, and commercialization of new technologies. The U.S. offers tremendous resources and advantages for those who invest and manufacture goods here. Through SelectUSA, our nation works to promote and facilitate business investment. SelectUSA provides information assistance to the international investor community; serves as an ombudsman for existing and potential investors; advocates on behalf of U.S. cities, states, and regions competing for global investment; and counsels U.S. economic development organizations on investment attraction best practices. To learn more about why the United States is the best country in the world to develop technology, manufacture products, deliver services, and grow your business, visit http://www.SelectUSA.gov or call +1-202-482-6800.

UNITED STATES PATENT AND TRADEMARK OFFICE

UNITED STATES DEPARTMENT OF COMMERCE
United States Patent and Trademark Office
Address: COMMISSIONER FOR PATENTS
P.O. Box 1450
Alexandria, Virginia 22313-1450
www.uspto.gov

APPLICATION NO.	FILING DATE	FIRST NAMED INVENTOR	ATTORNEY DOCKET NO.	CONFIRMATION NO.
13/825,083	01/20/2014	Jongju Na	NA001KR_PCTUS	9850

26338 7590 01/21/2016
MERLE W. RICHMAN, III
P.O. BOX 3333
LA JOLLA, CA 92038

EXAMINER
COMSTOCK, DAVID C

ART UNIT	PAPER NUMBER
3733	

MAIL DATE	DELIVERY MODE
01/21/2016	PAPER

Please find below and/or attached an Office communication concerning this application or proceeding.

The time period for reply, if any, is set in the attached communication.

PTOL-90A (Rev. 04/07)

UNITED STATES PATENT AND TRADEMARK OFFICE

Commissioner for Patents
United States Patent and Trademark Office
P.O. Box 1450
Alexandria, VA 22313-1450
www.uspto.gov

Application No. : 13825083
Applicant : Na
Filing Date : 01/20/2014
Date Mailed : 01/21/2016

NOTICE TO FILE CORRECTED APPLICATION PAPERS

Notice of Allowance Mailed

This application has been accorded an Allowance Date and is being prepared for issuance. The application, however, is incomplete for the reasons below.

Applicant is given two (2) months from the mail date of this Notice within which to respond. This time period for reply is extendable under 37 CFR 1.136(a) for only TWO additional MONTHS.

The application is not in compliance with 37 CFR 1.78, as indicated in the attachment. The consequences of failure to respond within the above-identified time period are set forth in the attachment.

Even if the Office has recognized a benefit claim and has entered it into the Office's database and included it on applicant's filing receipt, the benefit claim is not a proper benefit claim unless the reference in compliance with 37 CFR 1.78 is included, depending upon the application's filing date and as indicated in the attachment, in an application data sheet or in the first sentence(s) of the specification and all other requirements are met.

See attachment.

A copy of this notice MUST be returned with the reply. Please address response to "Mail Stop Issue Fee, Commissioner for Patents, P.O. Box 1450, Alexandria, VA 22313-1450".

/Vermel Wilson/
Publication Branch
Office of Data Management
(571) 272-4200

Application No. 13825083

APPLICATION FILED PRIOR TO SEPTEMBER 16, 2012, NOT IN COMPLIANCE WITH 37 CFR 1.78

[X] The 37 CFR 1.78(a)(2) reference on the application data sheet or in the first sentence(s) of the specification does not indicate the relationship (continuation, division, continuation-in-part) to the prior U.S. nonprovisional application or international application designating the U.S. See document coded SPEC dated 03/19/2013, listing application number(s) PCT/US2008/074131.

[ ] The 37 CFR 1.78(a)(2) reference on the application data sheet or in the first sentence(s) of the specification following the title does not provide the U.S. nonprovisional application number (series code and serial number) or, with respect to an international PCT application designating the U.S., it provides the international application number or international filing date but not both. See document coded dated , in which the following is missing: .

[ ] The 37 CFR 1.78(a)(2) reference on the application data sheet or in the first sentence(s) of the specification following the title shows an incorrect, incomplete, or illegible U.S. nonprovisional application number, international PCT application number, or international PCT filing date. See document coded dated , in which the following error was made: .

[ ] The 37 CFR 1.78(a)(2) reference to the prior U.S. nonprovisional application or international application designating the U.S. is not present on an application data sheet or in the first sentence(s) of the specification following the title, thus removing the validating link under 35 U.S.C. 119(a)-(d) to a prior foreign application or under 35 U.S.C. 119(e) to a prior U.S. provisional application.

[ ] The 37 CFR 1.78(a)(2) reference to the prior U.S. nonprovisional application or international application designating the U.S. is not present on an application data sheet or in the first sentence(s) of the specification following the title.

[ ] The 37 CFR 1.78(a)(5) reference to the prior U.S. provisional application is not present on an application data sheet or in first sentence(s) of the specification following the title.

[X] The 37 CFR 1.78(a)(5) reference to the prior U.S. provisional application on an application data sheet or in first sentence(s) of the specification following the title does not provide the provisional application number (series code and serial number). See document coded SPEC dated 03/19/2013, in which the following is missing: 61/449080.

[ ] The 37 CFR 1.78(a)(5) reference to the prior U.S. provisional application on an application data sheet or in first sentence(s) of the specification following the title shows an incorrect, incomplete, or illegible U.S. provisional application number. See document coded dated , in which the following error was made: .

[ ] Other: .

HOW TO RESPOND

A proper response to this notice would include any one of: (1) a supplemental Application Data Sheet (ADS) pursuant to 37 CFR 1.76(c) which provides benefit information that complies with 37 CFR 1.78(a)(2) or 37 CFR 1.78(a)(5); (2) an amendment to the first sentence(s) of the specification which provides benefit information that complies with 37 CFR 1.78(a)(2) or 37 CFR 1.78(a)(5); or (3) a petition filed pursuant to the provisions of 37 CFR 1.78(a)(3) or 37 CFR 1.78(a)(6) if the benefit information from the document identified above by code and date does not accurately reflect the benefits under 35 U.S.C. 119(e), 120, 121 or 365(c) as claimed by applicant (a grantable petition would include either a supplemental ADS or an amendment to the first sentence(s) of the specification as required by 37 CFR 1.78(a)(3)(i) or 37 CFR 1.78(a)(6)(i)). Such amendments to the specification or supplemental ADS submission may be filed after payment of the issue fee if limited to informalities noted herein. See Waiver of 37 CFR 1.312 for Document Required by Office of Patent Publication, 1280 Off. Gaz. Patent Office 918 (March 23, 2004).

WARNING: If Applicant fails to timely submit a proper response, the benefit information will be deleted and the patent will be printed without the benefit information present.

IN THE UNITED STATES PATENT AND TRADEMARK OFFICE

Applicant(s): Na	
Application No.: 13825083	Art Unit: 3733
Filed: 1/20/2014	Examiner: David Comstock
Title: METHOD, SYSTEM, AND APPARATUS FOR DERMALOGICAL TREATMENT	
Attorney Docket No.: NA001KR_PCTUS	

Response to Notice to File Corrected Application Papers

Commissioner for Patents
P.O. Box 1450
Alexandria, VA 22313-1450

Dear Sir:

Please amend this application as follows:

In the Specification:

Please amend paragraph 0001 as shown:

The present application claims the benefit of priority to Republic of Korea Application Number 10-2008-0076993, entitled "Electrical system, skin, skin care and cosmetic electricity," filed on August 6, 2008, priority thereto claimed in PCT Application Number PCT/US2008/074131, entitled “METHOD, SYSTEM, AND APPARATUS FOR DERMALOGICAL TREATMENT”, Attorney Docket No. NA001PCT filed on August 22, 2008, ~~and~~ which is the PCT application for the national stage entry of US Application Number 13/060,274, entitled “METHOD, SYSTEM, AND APPARATUS FOR DERMALOGICAL TREATMENT”, Attorney Docket No. NA001US filed on February 22, 2011, priority thereto is claimed in PCT Application Number PCT/KR/2012001335 filed on February 22, 2012, which the present application is a National stage entry thereof, the entirety of each is incorporated by reference.

REMARKS

A notice to file corrected application papers was issued on January 21, 2016 with a shortened response time of 2 months. Applicant respectfully contends this response is timely. The notice states that the application is not in compliance with 37 CFR 1.78 and either the ADS or first sentence of the application must be amended to correctly note the relationship of the cited priority applications. Applicant has amended the first sentence of the specification to correctly note the relationship between each priority document. Entry is respectfully requested.

Applicants have made a diligent effort to address this informality. However, should there remain unresolved issues that require adverse action, it is respectfully requested that the Examiner call Merle Richman, Applicants' Attorney at 858 320-2030 so that such issues may be resolved as expeditiously as possible.

Respectfully Submitted,

2/24/2016_____
Date

/mwresq/_____
Merle Richman
Patent Attorney
Reg. No. 38282

Merle Richman
Patent Attorney
Customer ID - 26338
PO Box 3333
La Jolla, CA 92038-3333

Tel. 858 551-2030

Doc Code: TRAN.LET
Document Description: Transmittal Letter

PTO/SB/21 (07-09)
Approved for use through 07/31/2012. OMB 0651-0031
U.S. Patent and Trademark Office; U.S. DEPARTMENT OF COMMERCE
Under the Paper Reduction Act of 1995, no persons are required to respond to a collection of information unless it displays a valid OMB control number.

TRANSMITTAL FORM *(to be used for all correspondence after initial filing)*		Application Number	13825083
		Filing Date	Jan. 20, 2014
		First Named Inventor	Na, Jongju
		Art Unit	3733
		Examiner Name	David Comstock
Total Number of Pages in This Submission		Attorney Docket Number	NA001KR_PCTUS

ENCLOSURES ***(Check all that apply)***

- [ ] Fee Transmittal Form
  - [ ] Fee Attached
- [x] Amendment / Reply (3 Pages)
  - [ ] After Final
  - [ ] Affidavits/declaration(s)
- [ ] Extension of Time Request
- [ ] Express Abandonment Request
- [ ] Information Disclosure Statement
- [ ] Certified Copy of Priority Document(s)
- [ ] Reply to Missing Parts/ Incomplete Application
  - [ ] Reply to Missing Parts under 37 CFR 1.52 or 1.53
- [ ] Drawing(s)
- [ ] Licensing-related Papers
- [ ] Petition
- [ ] Petition to Convert to a Provisional Application
- [ ] Power of Attorney, Revocation Change of Correspondence Address
- [ ] Terminal Disclaimer
- [ ] Request for Refund
- [ ] CD, Number of CD(s) _____
  - [ ] Landscape Table on CD
- [ ] After Allowance Communication to TC
- [ ] Appeal Communication to Board of Appeals and Interferences
- [ ] Appeal Communication to TC **(Appeal Notice, Brief, Reply Brief)**
- [ ] Proprietary Information
- [ ] Status Letter
- [ ] Other Enclosure(s) (please identify below):

Remarks: Response to Notice to File Corrected Application Papers

SIGNATURE OF APPLICANT, ATTORNEY, OR AGENT

Firm Name	Merle W. Richman, Cust ID - 26338		
Signature	/mwresq/		
Printed name	Merle Richman		
Date	February 24, 2016	Reg. No.	38282

CERTIFICATE OF TRANSMISSION/MAILING

I hereby certify that this correspondence is being electronically transmitted to the USPTO or deposited with the United States Postal Service with sufficient postage as first class mail in an envelope addressed to: Commissioner for Patents, P.O. Box 1450, Alexandria, VA 22313-1450 on the date shown below.

Signature	/mwresq/		
Typed or printed name	Merle Richman	Date	February 24, 2016

This collection of information is required by 37 CFR 1.5. The information is required to obtain or retain a benefit by the public which is to file (and by the USPTO to process) an application. Confidentiality is governed by 35 U.S.C. 122 and 37 CFR 1.11 and 1.14. This collection is estimated to take 2 hours to complete, including gathering, preparing, and submitting the completed application form to the USPTO. Time will vary depending upon the individual case. Any comments on the amount of time you require to complete this form and/or suggestions for reducing this burden, should be sent to the Chief Information Officer, U.S. Patent and Trademark Office, U.S. Department of Commerce, P.O. Box 1450, Alexandria, VA 22313-1450. DO NOT SEND FEES OR COMPLETED FORMS TO THIS ADDRESS. **SEND TO: Commissioner for Patents, P.O. Box 1450, Alexandria, VA 22313-1450.**

In you need assistance in completing the form, call 1-800-PTO-9199 and select option 2.

Electronic Acknowledgement Receipt

EFS ID:	25015102
Application Number:	13825083
International Application Number:	
Confirmation Number:	9850
Title of Invention:	METHOD, SYSTEM, AND APPARATUS FOR DERMATOLOGICAL TREATMENT
First Named Inventor/Applicant Name:	Jongju Na
Customer Number:	26338
Filer:	Merle W. Richman
Filer Authorized By:	
Attorney Docket Number:	NA001KR_PCTUS
Receipt Date:	25-FEB-2016
Filing Date:	20-JAN-2014
Time Stamp:	00:24:41
Application Type:	U.S. National Stage under 35 USC 371

Payment information:

Submitted with Payment	no

File Listing:

Document Number	Document Description	File Name	File Size(Bytes)/ Message Digest	Multi Part /.zip	Pages (if appl.)
1	Amendment after Notice of Allowance (Rule 312)	na001krPCT-supplemental-amendment.pdf	73824 6abf5fb8328bca66ad335392d7efb6accc616289	no	3

Warnings:

Information:

2	Transmittal Letter	na001krPCT_us-transmittal.pdf	110892 b97168485946801e88cb91a96a0ddfee56a8876f	no	1
Warnings:					
Information:					
		Total Files Size (in bytes):	184716		

This Acknowledgement Receipt evidences receipt on the noted date by the USPTO of the indicated documents, characterized by the applicant, and including page counts, where applicable. It serves as evidence of receipt similar to a Post Card, as described in MPEP 503.

<u>New Applications Under 35 U.S.C. 111</u>
If a new application is being filed and the application includes the necessary components for a filing date (see 37 CFR 1.53(b)-(d) and MPEP 506), a Filing Receipt (37 CFR 1.54) will be issued in due course and the date shown on this Acknowledgement Receipt will establish the filing date of the application.

<u>National Stage of an International Application under 35 U.S.C. 371</u>
If a timely submission to enter the national stage of an international application is compliant with the conditions of 35 U.S.C. 371 and other applicable requirements a Form PCT/DO/EO/903 indicating acceptance of the application as a national stage submission under 35 U.S.C. 371 will be issued in addition to the Filing Receipt, in due course.

<u>New International Application Filed with the USPTO as a Receiving Office</u>
If a new international application is being filed and the international application includes the necessary components for an international filing date (see PCT Article 11 and MPEP 1810), a Notification of the International Application Number and of the International Filing Date (Form PCT/RO/105) will be issued in due course, subject to prescriptions concerning national security, and the date shown on this Acknowledgement Receipt will establish the international filing date of the application.

UNITED STATES PATENT AND TRADEMARK OFFICE

UNITED STATES DEPARTMENT OF COMMERCE
United States Patent and Trademark Office
Address: COMMISSIONER FOR PATENTS
P.O. Box 1450
Alexandria, Virginia 22313-1450
www.uspto.gov

APPLICATION NUMBER	FILING or 371(c) DATE	GRP ART UNIT	FIL FEE REC'D	ATTY.DOCKET.NO	TOT CLAIMS	IND CLAIMS
13/825,083	01/20/2014	3733	880	NA001KR_PCTUS	20	2

CONFIRMATION NO. 9850

CORRECTED FILING RECEIPT

26338
MERLE W. RICHMAN, III
P.O. BOX 3333
LA JOLLA, CA 92038

Date Mailed: 03/01/2016

Receipt is acknowledged of this non-provisional patent application. The application will be taken up for examination in due course. Applicant will be notified as to the results of the examination. Any correspondence concerning the application must include the following identification information: the U.S. APPLICATION NUMBER, FILING DATE, NAME OF APPLICANT, and TITLE OF INVENTION. Fees transmitted by check or draft are subject to collection. Please verify the accuracy of the data presented on this receipt. **If an error is noted on this Filing Receipt, please submit a written request for a Filing Receipt Correction. Please provide a copy of this Filing Receipt with the changes noted thereon. If you received a "Notice to File Missing Parts" for this application, please submit any corrections to this Filing Receipt with your reply to the Notice. When the USPTO processes the reply to the Notice, the USPTO will generate another Filing Receipt incorporating the requested corrections**

Inventor(s)

Jongju Na, Songpa-Gu, KOREA, REPUBLIC OF;

Applicant(s)

Jongju Na, Songpa-Gu, KOREA, REPUBLIC OF;

Power of Attorney: None

Domestic Priority data as claimed by applicant

This application is a 371 of PCT/KR2012/001335 02/22/2012

Foreign Applications for which priority is claimed (You may be eligible to benefit from the **Patent Prosecution Highway** program at the USPTO. Please see http://www.uspto.gov for more information.) - None.
Foreign application information must be provided in an Application Data Sheet in order to constitute a claim to foreign priority. See 37 CFR 1.55 and 1.76.

Permission to Access Application via Priority Document Exchange: No

Permission to Access Search Results: No

Applicant may provide or rescind an authorization for access using Form PTO/SB/39 or Form PTO/SB/69 as appropriate.

If Required, Foreign Filing License Granted: 01/23/2014
The country code and number of your priority application, to be used for filing abroad under the Paris Convention, is **US 13/825,083**
Projected Publication Date: Not Applicable

Non-Publication Request: No

Early Publication Request: No
**** SMALL ENTITY ****
Title

METHOD, SYSTEM, AND APPARATUS FOR DERMATOLOGICAL TREATMENT

Preliminary Class

600

Statement under 37 CFR 1.55 or 1.78 for AIA (First Inventor to File) Transition Applications: No

PROTECTING YOUR INVENTION OUTSIDE THE UNITED STATES

Since the rights granted by a U.S. patent extend only throughout the territory of the United States and have no effect in a foreign country, an inventor who wishes patent protection in another country must apply for a patent in a specific country or in regional patent offices. Applicants may wish to consider the filing of an international application under the Patent Cooperation Treaty (PCT). An international (PCT) application generally has the same effect as a regular national patent application in each PCT-member country. The PCT process **simplifies** the filing of patent applications on the same invention in member countries, but **does not result** in a grant of "an international patent" and does not eliminate the need of applicants to file additional documents and fees in countries where patent protection is desired.

Almost every country has its own patent law, and a person desiring a patent in a particular country must make an application for patent in that country in accordance with its particular laws. Since the laws of many countries differ in various respects from the patent law of the United States, applicants are advised to seek guidance from specific foreign countries to ensure that patent rights are not lost prematurely.

Applicants also are advised that in the case of inventions made in the United States, the Director of the USPTO must issue a license before applicants can apply for a patent in a foreign country. The filing of a U.S. patent application serves as a request for a foreign filing license. The application's filing receipt contains further information and guidance as to the status of applicant's license for foreign filing.

Applicants may wish to consult the USPTO booklet, "General Information Concerning Patents" (specifically, the section entitled "Treaties and Foreign Patents") for more information on timeframes and deadlines for filing foreign patent applications. The guide is available either by contacting the USPTO Contact Center at 800-786-9199, or it can be viewed on the USPTO website at http://www.uspto.gov/web/offices/pac/doc/general/index.html.

For information on preventing theft of your intellectual property (patents, trademarks and copyrights), you may wish to consult the U.S. Government website, http://www.stopfakes.gov. Part of a Department of Commerce initiative, this website includes self-help "toolkits" giving innovators guidance on how to protect intellectual property in specific countries such as China, Korea and Mexico. For questions regarding patent enforcement issues, applicants may call the U.S. Government hotline at 1-866-999-HALT (1-866-999-4258).

LICENSE FOR FOREIGN FILING UNDER

Title 35, United States Code, Section 184

Title 37, Code of Federal Regulations, 5.11 & 5.15

GRANTED

The applicant has been granted a license under 35 U.S.C. 184, if the phrase "IF REQUIRED, FOREIGN FILING LICENSE GRANTED" followed by a date appears on this form. Such licenses are issued in all applications where the conditions for issuance of a license have been met, regardless of whether or not a license may be required as set forth in 37 CFR 5.15. The scope and limitations of this license are set forth in 37 CFR 5.15(a) unless an earlier license has been issued under 37 CFR 5.15(b). The license is subject to revocation upon written notification. The date indicated is the effective date of the license, unless an earlier license of similar scope has been granted under 37 CFR 5.13 or 5.14.

This license is to be retained by the licensee and may be used at any time on or after the effective date thereof unless it is revoked. This license is automatically transferred to any related applications(s) filed under 37 CFR 1.53(d). This license is not retroactive.

The grant of a license does not in any way lessen the responsibility of a licensee for the security of the subject matter as imposed by any Government contract or the provisions of existing laws relating to espionage and the national security or the export of technical data. Licensees should apprise themselves of current regulations especially with respect to certain countries, of other agencies, particularly the Office of Defense Trade Controls, Department of State (with respect to Arms, Munitions and Implements of War (22 CFR 121-128)); the Bureau of Industry and Security, Department of Commerce (15 CFR parts 730-774); the Office of Foreign AssetsControl, Department of Treasury (31 CFR Parts 500+) and the Department of Energy.

NOT GRANTED

No license under 35 U.S.C. 184 has been granted at this time, if the phrase "IF REQUIRED, FOREIGN FILING LICENSE GRANTED" DOES NOT appear on this form. Applicant may still petition for a license under 37 CFR 5.12, if a license is desired before the expiration of 6 months from the filing date of the application. If 6 months has lapsed from the filing date of this application and the licensee has not received any indication of a secrecy order under 35 U.S.C. 181, the licensee may foreign file the application pursuant to 37 CFR 5.15(b).

SelectUSA

The United States represents the largest, most dynamic marketplace in the world and is an unparalleled location for business investment, innovation, and commercialization of new technologies. The U.S. offers tremendous resources and advantages for those who invest and manufacture goods here. Through SelectUSA, our nation works to promote and facilitate business investment. SelectUSA provides information assistance to the international investor community; serves as an ombudsman for existing and potential investors; advocates on behalf of U.S. cities, states, and regions competing for global investment; and counsels U.S. economic development organizations on investment attraction best practices. To learn more about why the United States is the best country in the world to develop technology, manufacture products, deliver services, and grow your business, visit http://www.SelectUSA.gov or call +1-202-482-6800.

UNITED STATES PATENT AND TRADEMARK OFFICE

UNITED STATES DEPARTMENT OF COMMERCE
United States Patent and Trademark Office
Address: COMMISSIONER FOR PATENTS
P.O. Box 1450
Alexandria, Virginia 22313-1450
www.uspto.gov

APPLICATION NO.	FILING DATE	FIRST NAMED INVENTOR	ATTORNEY DOCKET NO.	CONFIRMATION NO.
13/825,083	01/20/2014	Jongju Na	NA001KR_PCTUS	9850

26338 7590 03/03/2016
MERLE W. RICHMAN, III
P.O. BOX 3333
LA JOLLA, CA 92038

EXAMINER
COMSTOCK, DAVID C

ART UNIT	PAPER NUMBER
3733	

MAIL DATE	DELIVERY MODE
03/03/2016	PAPER

Please find below and/or attached an Office communication concerning this application or proceeding.

The time period for reply, if any, is set in the attached communication.

PTOL-90A (Rev. 04/07)

Response to Rule 312 Communication	Application No. 13/825,083	Applicant(s)
	Examiner	Art Unit

-- The MAILING DATE of this communication appears on the cover sheet with the correspondence address --

1. ☒ The amendment filed on *25 February 2016* under 37 CFR 1.312 has been considered, and has been:

a) ☒ entered.

b) ☐ entered as directed to matters of form not affecting the scope of the invention.

c) ☐ disapproved because the amendment was filed after the payment of the issue fee.
Any amendment filed after the date the issue fee is paid must be accompanied by a petition under 37 CFR 1.313(c)(1) and the required fee to withdraw the application from issue.

d) ☐ disapproved. See explanation below.

e) ☐ entered in part. See explanation below.

L.HILL

PUBLISHING DIVISION

PART B - FEE(S) TRANSMITTAL

Complete and send this form, together with applicable fee(s), to: Mail **Mail Stop ISSUE FEE**
Commissioner for Patents
P.O. Box 1450
Alexandria, Virginia 22313-1450
or Fax (571)-273-2885

INSTRUCTIONS: This form should be used for transmitting the ISSUE FEE and PUBLICATION FEE (if required). Blocks 1 through 5 should be completed where appropriate. All further correspondence including the Patent, advance orders and notification of maintenance fees will be mailed to the current correspondence address as indicated unless corrected below or directed otherwise in Block 1, by (a) specifying a new correspondence address; and/or (b) indicating a separate "FEE ADDRESS" for maintenance fee notifications.

CURRENT CORRESPONDENCE ADDRESS (Note: Use Block 1 for any change of address)

26338 2590 01/14/2016
MERLE W. RICHMAN, III
P.O. BOX 3333
LA JOLLA, CA 92038

Note: A certificate of mailing can only be used for domestic mailings of the Fee(s) Transmittal. This certificate cannot be used for any other accompanying papers. Each additional paper, such as an assignment or formal drawing, must have its own certificate of mailing or transmission.

Certificate of Mailing or Transmission

I hereby certify that this Fee(s) Transmittal is being deposited with the United States Postal Service with sufficient postage for first class mail in an envelope addressed to the Mail Stop ISSUE FEE address above, or being facsimile transmitted to the USPTO (571) 273-2885, on the date indicated below.

Merle W. Richman, Esq.	(Depositor's name)
	(Signature)
3/18/2016	(Date)

APPLICATION NO.	FILING DATE	FIRST NAMED INVENTOR	ATTORNEY DOCKET NO.	CONFIRMATION NO.
13/825,083	01/20/2014	Jongju Na	NA001KR_PCTUS	9850

TITLE OF INVENTION: METHOD, SYSTEM, AND APPARATUS FOR DERMALOGICAL TREATMENT

APPLN. TYPE	ENTITY STATUS	ISSUE FEE DUE	PUBLICATION FEE DUE	PREV. PAID ISSUE FEE	TOTAL FEE(S) DUE	DATE DUE
nonprovisional	SMALL	$480	$0	$0	$480	04/14/2016

EXAMINER	ART UNIT	CLASS-SUBCLASS
COMSTOCK, DAVID C	3733	600-249000

1. Change of correspondence address or indication of "Fee Address" (37 CFR 1.363).
- ☐ Change of correspondence address (or Change of Correspondence Address form PTO/SB/122) attached.
- ☐ "Fee Address" indication (or "Fee Address" Indication form PTO/SB/47; Rev 03-02 or more recent) attached. **Use of a Customer Number is required.**

2. For printing on the patent front page, list
(1) The names of up to 3 registered patent attorneys or agents OR, alternatively,
(2) The name of a single firm (having as a member a registered attorney or agent) and the names of up to 2 registered patent attorneys or agents. If no name is listed, no name will be printed.

1 Merle W. Richman, Esq.
2 .....
3 .....

3. ASSIGNEE NAME AND RESIDENCE DATA TO BE PRINTED ON THE PATENT (print or type)

PLEASE NOTE: Unless an assignee is identified below, no assignee data will appear on the patent. If an assignee is identified below, the document has been filed for recordation as set forth in 37 CFR 3.11. Completion of this form is NOT a substitute for filing an assignment.

(A) NAME OF ASSIGNEE (B) RESIDENCE: (CITY and STATE OR COUNTRY)

Please check the appropriate assignee category or categories (will not be printed on the patent): ☐ Individual ☐ Corporation or other private group entity ☐ Government

4a. The following fee(s) are submitted:
- ☑ Issue Fee
- ☐ Publication Fee (No small entity discount permitted)
- ☐ Advance Order - # of Copies .....

4b. Payment of Fee(s): **(Please first reapply any previously paid issue fee shown above)**
- ☐ A check is enclosed.
- ☑ Payment by ~~credit card. Form PTO-2038 is attached.~~ www.uspto.gov
- ☐ The director is hereby authorized to charge the required fee(s), any deficiency, or credits any overpayment, to Deposit Account Number ..... (enclose an extra copy of this form).

5. **Change in Entity Status** (from status indicated above)
- ☐ Applicant certifying micro entity status. See 37 CFR 1.29
- ☒ Applicant asserting small entity status. See 37 CFR 1.27
- ☐ Applicant changing to regular undiscounted fee status.

NOTE: Absent a valid certification of Micro Entity Status (see forms PTO/SB/15A and 15B), issue fee payment in the micro entity amount will not be accepted at the risk of application abandonment.

NOTE: If the application was previously under micro entity status, checking this box will be taken to be a notification of loss of entitlement to micro entity status.

NOTE: Checking this box will be taken to be a notification of loss of entitlement to small or micro entity status, as applicable.

NOTE: This form must be signed in accordance with 37 CFR 1.31 and 1.33. See 37 CFR 1.4 for signature requirements and certifications.

Authorized Signature ..... Date 3/18/2016

Typed or printed name Merle W Richman, Esq. Registration No. 38282

PTOL-85 Part B (10-13) Approved for use through 10/31/2013. OMB 0651-0033 U.S. Patent and Trademark Office; U.S. DEPARTMENT OF COMMERCE

Electronic Patent Application Fee Transmittal

Application Number:	13825083
Filing Date:	20-Jan-2014
Title of Invention:	METHOD, SYSTEM, AND APPARATUS FOR DERMATOLOGICAL TREATMENT
First Named Inventor/Applicant Name:	Jongju Na
Filer:	Merle W. Richman
Attorney Docket Number:	NA001KR_PCTUS

Filed as Small Entity

Filing Fees for U.S. National Stage under 35 USC 371

Description	Fee Code	Quantity	Amount	Sub-Total in USD($)
Basic Filing:				
Pages:				
Claims:				
Miscellaneous-Filing:				
Petition:				
Patent-Appeals-and-Interference:				
Post-Allowance-and-Post-Issuance:				
Utility Appl Issue Fee	2501	1	480	480

Description	Fee Code	Quantity	Amount	Sub-Total in USD($)
Extension-of-Time:				
Miscellaneous:				
		Total in USD ($)		**480**

Electronic Acknowledgement Receipt

EFS ID:	25239782
Application Number:	13825083
International Application Number:	
Confirmation Number:	9850
Title of Invention:	METHOD, SYSTEM, AND APPARATUS FOR DERMATOLOGICAL TREATMENT
First Named Inventor/Applicant Name:	Jongju Na
Customer Number:	26338
Filer:	Merle W. Richman
Filer Authorized By:	
Attorney Docket Number:	NA001KR_PCTUS
Receipt Date:	18-MAR-2016
Filing Date:	20-JAN-2014
Time Stamp:	13:51:05
Application Type:	U.S. National Stage under 35 USC 371

Payment information:

Submitted with Payment	yes
Payment Type	Credit Card
Payment was successfully received in RAM	$480
RAM confirmation Number	101
Deposit Account	
Authorized User	
The Director of the USPTO is hereby authorized to charge indicated fees and credit any overpayment as follows:	

File Listing:

Document Number	Document Description	File Name	File Size(Bytes)/ Message Digest	Multi Part /.zip	Pages (if appl.)
1	Issue Fee Payment (PTO-85B)	na001krPCT-issue-fee-2016-01-14-af.pdf	317439 659c49e5ed93b774d2db5a9c6bca633bff6a9aca	no	1
Warnings:					
Information:					
2	Fee Worksheet (SB06)	fee-info.pdf	30694 051f98663df8d42d57f365bcaefee631c0ee96f1	no	2
Warnings:					
Information:					
		Total Files Size (in bytes):	348133		

This Acknowledgement Receipt evidences receipt on the noted date by the USPTO of the indicated documents, characterized by the applicant, and including page counts, where applicable. It serves as evidence of receipt similar to a Post Card, as described in MPEP 503.

<u>New Applications Under 35 U.S.C. 111</u>
If a new application is being filed and the application includes the necessary components for a filing date (see 37 CFR 1.53(b)-(d) and MPEP 506), a Filing Receipt (37 CFR 1.54) will be issued in due course and the date shown on this Acknowledgement Receipt will establish the filing date of the application.

<u>National Stage of an International Application under 35 U.S.C. 371</u>
If a timely submission to enter the national stage of an international application is compliant with the conditions of 35 U.S.C. 371 and other applicable requirements a Form PCT/DO/EO/903 indicating acceptance of the application as a national stage submission under 35 U.S.C. 371 will be issued in addition to the Filing Receipt, in due course.

<u>New International Application Filed with the USPTO as a Receiving Office</u>
If a new international application is being filed and the international application includes the necessary components for an international filing date (see PCT Article 11 and MPEP 1810), a Notification of the International Application Number and of the International Filing Date (Form PCT/RO/105) will be issued in due course, subject to prescriptions concerning national security, and the date shown on this Acknowledgement Receipt will establish the international filing date of the application.

UNITED STATES PATENT AND TRADEMARK OFFICE

UNITED STATES DEPARTMENT OF COMMERCE
United States Patent and Trademark Office
Address: COMMISSIONER FOR PATENTS
P.O. Box 1450
Alexandria, Virginia 22313-1450
www.uspto.gov

APPLICATION NO.	ISSUE DATE	PATENT NO.	ATTORNEY DOCKET NO.	CONFIRMATION NO.
13/825,083	04/26/2016	9320536	NA001KR_PCTUS	9850

26338 7590 04/06/2016

MERLE W. RICHMAN, III
P.O. BOX 3333
LA JOLLA, CA 92038

ISSUE NOTIFICATION

The projected patent number and issue date are specified above.

Determination of Patent Term Adjustment under 35 U.S.C. 154 (b)
(application filed on or after May 29, 2000)

The Patent Term Adjustment is 152 day(s). Any patent to issue from the above-identified application will include an indication of the adjustment on the front page.

If a Continued Prosecution Application (CPA) was filed in the above-identified application, the filing date that determines Patent Term Adjustment is the filing date of the most recent CPA.

Applicant will be able to obtain more detailed information by accessing the Patent Application Information Retrieval (PAIR) WEB site (http://pair.uspto.gov).

Any questions regarding the Patent Term Extension or Adjustment determination should be directed to the Office of Patent Legal Administration at (571)-272-7702. Questions relating to issue and publication fee payments should be directed to the Application Assistance Unit (AAU) of the Office of Data Management (ODM) at (571)-272-4200.

APPLICANT(s) (Please see PAIR WEB site http://pair.uspto.gov for additional applicants):

Jongju Na, Songpa-Gu, KOREA, REPUBLIC OF;

The United States represents the largest, most dynamic marketplace in the world and is an unparalleled location for business investment, innovation, and commercialization of new technologies. The USA offers tremendous resources and advantages for those who invest and manufacture goods here. Through SelectUSA, our nation works to encourage and facilitate business investment. To learn more about why the USA is the best country in the world to develop technology, manufacture products, and grow your business, visit SelectUSA.gov.

PATENT ASSIGNMENT COVER SHEET

Electronic Version v1.1
Stylesheet Version v1.2

EPAS ID: PAT6424983

SUBMISSION TYPE:	NEW ASSIGNMENT
NATURE OF CONVEYANCE:	ASSIGNMENT

CONVEYING PARTY DATA

Name	Execution Date
VIOL CO., LTD.	11/26/2020

RECEIVING PARTY DATA

Name:	SERENDIA LLC
Street Address:	31631 PASEO DON JOSE
City:	SAN JUAN CAPISTRANO
State/Country:	CALIFORNIA
Postal Code:	92675

PROPERTY NUMBERS Total: 8

Property Type	Number
Patent Number:	9480836
Patent Number:	10058379
Patent Number:	10799286
Patent Number:	8979912
Patent Number:	9320536
Patent Number:	9775774
Patent Number:	9630002
Application Number:	15095098

CORRESPONDENCE DATA

Fax Number:

Correspondence will be sent to the e-mail address first; if that is unsuccessful, it will be sent using a fax number, if provided; if that is unsuccessful, it will be sent via US Mail.

Phone:	9493512006
Email:	ks.im@ideahub.co.kr
Correspondent Name:	KYEONGSU IM
Address Line 1:	9880 IRVINE CENTER DRIVE
Address Line 4:	IRVINE, CALIFORNIA 92618

NAME OF SUBMITTER:	KYEONGSU IM
SIGNATURE:	/keith k. Im/
DATE SIGNED:	12/01/2020

	This document serves as an Oath/Declaration (37 CFR 1.63).
Total Attachments: 2 source=Patent Assignment#page1.tif source=Patent Assignment#page2.tif	

EXHIBIT B

INTELLECTUAL PROPERTY ASSIGNMENT AGREEMENT

WHEREAS, **Viol Co., Ltd.** a corporation organized and existing under the laws of Republic of Korea, having an address at #808, #809 Bundang Technopark C, 744 Pangyo-ro, Bundang-gu, Seongnam-si Gyeonggi-do 13510 South Korea (hereinafter, "ASSIGNOR") is the sole and exclusive owner of certain United States and/or patent applications listed in Schedule A annexed hereto (collectively referred to as the "Patents"); and

WHEREAS, **Serendia, LLC**, a California Limited Liability Company having a place of business at 31631 Paseo Don Jose, San Juan Capistrano, CA 92675. (hereinafter, "ASSIGNEE") is desirous of acquiring the right, title and interest in, to and under the said Patents (and all foreign counterparts and related foreign patents).

Now, Therefore,

For good and valuable consideration, the receipt of which is hereby acknowledged, ASSIGNOR does hereby assigns, transfers and sets over to ASSIGNEE, the Patents aforesaid, and any inventions claimed in said Patents, any reissue or reissues of said Patents already granted and which may be granted, any certificates of reexamination already granted and which may be granted the same to be held and enjoyed by ASSIGNEE for its own use and enjoyment, and for the use and enjoyment of its successors, assigns or other legal representatives, to the end of the term or terms for which said Patents are or may be granted, reissued or extended as fully and entirely as the same would have been held and enjoyed by ASSIGNOR, if this assignment and sale had not been made; together with all claims for damages by reason of past, current, and future infringement and/or provisional rights under said Patents, with the right to sue for, and collect the same for its own use and behalf, and for the use and behalf of its successors, assigns or other legal representatives.

And, ASSIGNOR, hereby authorizes and requests the Commissioner of Patents and Trademarks to issue any and all Letters Patents of the United States on said inventions to ASSIGNEE as assignee of the entire interest, and hereby covenants that ASSIGNOR has full right to convey the entire interest herein assigned, and that, except as otherwise provided between the Parties, ASSIGNOR has not executed, and will not execute, any agreements in conflict therewith.

In Witness Whereof, ASSIGNOR has caused this Intellectual Property Assignment Agreement to be executed by its duly authorized representative.

VIOL CO., LTD.

By: _____

Name: Lee Sang Jin

Title: CEO

Date: 11/26/20

SERENDIA, LLC

By: _____

Name: Jong'u Na

Title: General manager

Date: 11/26/20

SCHEDULE A

Family	Pat/Pub. No.	Title	Inventor	Filing no.	Filing Date	Expiry
1	US9480836	Skin treatment apparatus and method	Na; Jongju	US14/006930	2012.06.14	2032.07.10
	US10058379	Electrically based medical treatment device and method	Na; Jongju	US15/202511	2016.07.05	2032.08.19
	US20180360528A1	ELECTRICALLY BASED MEDICAL TREATMENT DEVICE AND METHOD	Na; Jongju	US16/111616	2018.08.24	
2	US8979912	Method, system, and apparatus for dermalogical treatment	Na; Jongju|Richman; Merle	US13/060274	2008.08.22	2030.05.27
	US9320536	Method, system, and apparatus for dermatological treatment	Na; Jongju	US13/825083	2012.02.22	2032.07.23
	US9775774	Method, system, and apparatus for dermatological treatment	Na; Jongju	US15/096686	2016.04.12	2036.04.12
	US9630002	Method, system, and apparatus for dermatological treatment	Na; Jongju|Richman; Merle	US14/598208	2015.01.15	2028.08.22
	US20170014305A1	METHOD, SYSTEM, AND APPARATUS FOR DERMATOLOGICAL TREATMENT	Na; Jongju|Richman; Merle	US15/095098	2016.04.10	

PTO/SB/44 (09-07)
Approved for use through 03/31/2023. OMB 0651-0033
U.S. Patent and Trademark Office; U.S. DEPARTMENT OF COMMERCE
Under the Paperwork Reduction Act of 1995, no persons are required to respond to a collection of information unless it displays a valid OMB control number.
(Also Form PTO-1050)

UNITED STATES PATENT AND TRADEMARK OFFICE
CERTIFICATE OF CORRECTION

PATENT NO. : 9,320,536

APPLICATION NO.: 13/825,083

ISSUE DATE : April 26, 2016

INVENTOR(S) : Jongju Na

It is certified that an error appears or errors appear in the above-identified patent and that said Letters Patent is hereby corrected as shown below:

On the cover page of United States Patent No. 9,320,536, there should be Related U.S. Application Data, and under the item (63) should be listed --Continuation of Application No. 13/060,274, filed as application No. PCT/US2008/074131 on Aug. 22, 2008, now Pat. No. 8,979,972--.
Under the item (60) should be listed --Provisional Application No. 61/449,080, filed on Mar. 3, 2011--.

On the cover page of United States Patent No. 9,320,536, there should be Foreign Application Priority Data, and under the item (30) should be listed --Aug. 8, 2008 (KR) 10-2008-0076993--.

MAILING ADDRESS OF SENDER (Please do not use Customer Number below):

Capitol IP Law Group, PLLC
1918 18th St NW Unit 4
Washington DC 20009

This collection of information is required by 37 CFR 1.322, 1.323, and 1.324. The information is required to obtain or retain a benefit by the public which is to file (and by the USPTO to process) an application. Confidentiality is governed by 35 U.S.C. 122 and 37 CFR 1.14. This collection is estimated to take 1.0 hour to complete, including gathering, preparing, and submitting the completed application form to the USPTO. Time will vary depending upon the individual case. Any comments on the amount of time you require to complete this form and/or suggestions for reducing this burden, should be sent to the Chief Information Officer, U.S. Patent and Trademark Office, U.S. Department of Commerce, P.O. Box 1450, Alexandria, VA 22313-1450. DO NOT SEND FEES OR COMPLETED FORMS TO THIS ADDRESS. **SEND TO: Attention Certificate of Corrections Branch, Commissioner for Patents, P.O. Box 1450, Alexandria, VA 22313-1450.**

If you need assistance in completing the form, call 1-800-PTO-9199 and select option 2.

Privacy Act Statement

The **Privacy Act of 1974 (P.L. 93-579)** requires that you be given certain information in connection with your submission of the attached form related to a patent application or patent. Accordingly, pursuant to the requirements of the Act, please be advised that: (1) the general authority for the collection of this information is 35 U.S.C. 2(b)(2); (2) furnishing of the information solicited is voluntary; and (3) the principal purpose for which the information is used by the U.S. Patent and Trademark Office is to process and/or examine your submission related to a patent application or patent. If you do not furnish the requested information, the U.S. Patent and Trademark Office may not be able to process and/or examine your submission, which may result in termination of proceedings or abandonment of the application or expiration of the patent.

The information provided by you in this form will be subject to the following routine uses:

1. The information on this form will be treated confidentially to the extent allowed under the Freedom of Information Act (5 U.S.C. 552) and the Privacy Act (5 U.S.C 552a). Records from this system of records may be disclosed to the Department of Justice to determine whether disclosure of these records is required by the Freedom of Information Act.
2. A record from this system of records may be disclosed, as a routine use, in the course of presenting evidence to a court, magistrate, or administrative tribunal, including disclosures to opposing counsel in the course of settlement negotiations.
3. A record in this system of records may be disclosed, as a routine use, to a Member of Congress submitting a request involving an individual, to whom the record pertains, when the individual has requested assistance from the Member with respect to the subject matter of the record.
4. A record in this system of records may be disclosed, as a routine use, to a contractor of the Agency having need for the information in order to perform a contract. Recipients of information shall be required to comply with the requirements of the Privacy Act of 1974, as amended, pursuant to 5 U.S.C. 552a(m).
5. A record related to an International Application filed under the Patent Cooperation Treaty in this system of records may be disclosed, as a routine use, to the International Bureau of the World Intellectual Property Organization, pursuant to the Patent Cooperation Treaty.
6. A record in this system of records may be disclosed, as a routine use, to another federal agency for purposes of National Security review (35 U.S.C. 181) and for review pursuant to the Atomic Energy Act (42 U.S.C. 218(c)).
7. A record from this system of records may be disclosed, as a routine use, to the Administrator, General Services, or his/her designee, during an inspection of records conducted by GSA as part of that agency's responsibility to recommend improvements in records management practices and programs, under authority of 44 U.S.C. 2904 and 2906. Such disclosure shall be made in accordance with the GSA regulations governing inspection of records for this purpose, and any other relevant (*i.e.*, GSA or Commerce) directive. Such disclosure shall not be used to make determinations about individuals.
8. A record from this system of records may be disclosed, as a routine use, to the public after either publication of the application pursuant to 35 U.S.C. 122(b) or issuance of a patent pursuant to 35 U.S.C. 151. Further, a record may be disclosed, subject to the limitations of 37 CFR 1.14, as a routine use, to the public if the record was filed in an application which became abandoned or in which the proceedings were terminated and which application is referenced by either a published application, an application open to public inspection or an issued patent.
9. A record from this system of records may be disclosed, as a routine use, to a Federal, State, or local law enforcement agency, if the USPTO becomes aware of a violation or potential violation of law or regulation.

UNITED STATES PATENT AND TRADEMARK OFFICE

UNITED STATES DEPARTMENT OF COMMERCE
United States Patent and Trademark Office
Address: COMMISSIONER FOR PATENTS
P.O. Box 1450
Alexandria, Virginia 22313-1450
www.uspto.gov

APPLICATION NO.	FILING DATE	FIRST NAMED INVENTOR	ATTORNEY DOCKET NO.	CONFIRMATION NO.
13/825,083	01/20/2014	Jongju Na	NA001KR_PCTUS	9850

26338 7590 03/03/2016
MERLE W. RICHMAN, III
P.O. BOX 3333
LA JOLLA, CA 92038

EXAMINER
COMSTOCK, DAVID C

ART UNIT	PAPER NUMBER
3733	

MAIL DATE	DELIVERY MODE
03/03/2016	PAPER

Please find below and/or attached an Office communication concerning this application or proceeding.

The time period for reply, if any, is set in the attached communication.

PTOL-90A (Rev. 04/07)

Response to Rule 312 Communication	Application No. 13/825,083	Applicant(s)
	Examiner	Art Unit

-- The MAILING DATE of this communication appears on the cover sheet with the correspondence address --

1. ☒ The amendment filed on *25 February 2016* under 37 CFR 1.312 has been considered, and has been:

a) ☒ entered.

b) ☐ entered as directed to matters of form not affecting the scope of the invention.

c) ☐ disapproved because the amendment was filed after the payment of the issue fee.
Any amendment filed after the date the issue fee is paid must be accompanied by a petition under 37 CFR 1.313(c)(1) and the required fee to withdraw the application from issue.

d) ☐ disapproved. See explanation below.

e) ☐ entered in part. See explanation below.

L.HILL

PUBLISHING DIVISION

IN THE UNITED STATES PATENT AND TRADEMARK OFFICE

Applicant(s): Na	
Application No.: 13825083	Art Unit: 3733
Filed: 1/20/2014	Examiner: David Comstock
Title: METHOD, SYSTEM, AND APPARATUS FOR DERMALOGICAL TREATMENT	
Attorney Docket No.: NA001KR_PCTUS	

Response to Notice to File Corrected Application Papers

Commissioner for Patents
P.O. Box 1450
Alexandria, VA 22313-1450

Dear Sir:

Please amend this application as follows:

In the Specification:

Please amend paragraph 0001 as shown:

The present application claims the benefit of priority to Republic of Korea Application Number 10-2008-0076993, entitled "Electrical system, skin, skin care and cosmetic electricity," filed on August 6, 2008, priority thereto claimed in PCT Application Number PCT/US2008/074131, entitled “METHOD, SYSTEM, AND APPARATUS FOR DERMALOGICAL TREATMENT”, Attorney Docket No. NA001PCT filed on August 22, 2008, ~~and~~ which is the PCT application for the national stage entry of US Application Number 13/060,274, entitled “METHOD, SYSTEM, AND APPARATUS FOR DERMALOGICAL TREATMENT”, Attorney Docket No. NA001US filed on February 22, 2011, priority thereto is claimed in PCT Application Number PCT/KR/2012001335 filed on February 22, 2012, which the present application is a National stage entry thereof, the entirety of each is incorporated by reference.

UNITED STATES PATENT AND TRADEMARK OFFICE

UNITED STATES DEPARTMENT OF COMMERCE
United States Patent and Trademark Office
Address: COMMISSIONER FOR PATENTS
P.O. Box 1450
Alexandria, Virginia 22313-1450
www.uspto.gov

APPLICATION NUMBER	FILING or 371(c) DATE	GRP ART UNIT	FIL FEE REC'D	ATTY.DOCKET.NO	TOT CLAIMS	IND CLAIMS
13/825,083	01/20/2014	3733	880	NA001KR_PCTUS	20	2

CONFIRMATION NO. 9850

CORRECTED FILING RECEIPT

26338
MERLE W. RICHMAN, III
P.O. BOX 3333
LA JOLLA, CA 92038

Date Mailed: 01/20/2016

Receipt is acknowledged of this non-provisional patent application. The application will be taken up for examination in due course. Applicant will be notified as to the results of the examination. Any correspondence concerning the application must include the following identification information: the U.S. APPLICATION NUMBER, FILING DATE, NAME OF APPLICANT, and TITLE OF INVENTION. Fees transmitted by check or draft are subject to collection. Please verify the accuracy of the data presented on this receipt. **If an error is noted on this Filing Receipt, please submit a written request for a Filing Receipt Correction. Please provide a copy of this Filing Receipt with the changes noted thereon. If you received a "Notice to File Missing Parts" for this application, please submit any corrections to this Filing Receipt with your reply to the Notice. When the USPTO processes the reply to the Notice, the USPTO will generate another Filing Receipt incorporating the requested corrections**

Inventor(s)

Jongju Na, Songpa-Gu, KOREA, REPUBLIC OF;

Applicant(s)

Jongju Na, Songpa-Gu, KOREA, REPUBLIC OF;

Power of Attorney: None

Domestic Priority data as claimed by applicant

This application is a 371 of PCT/KR2012/001335 02/22/2012
which claims benefit of 61/449,080 03/03/2011
and is a CON of 13/060,274 03/30/2011 PAT 8979912

Foreign Applications for which priority is claimed (You may be eligible to benefit from the **Patent Prosecution Highway** program at the USPTO. Please see http://www.uspto.gov for more information.) - None.
Foreign application information must be provided in an Application Data Sheet in order to constitute a claim to foreign priority. See 37 CFR 1.55 and 1.76.

Permission to Access Application via Priority Document Exchange: No

Permission to Access Search Results: No

Applicant may provide or rescind an authorization for access using Form PTO/SB/39 or Form PTO/SB/69 as appropriate.

If Required, Foreign Filing License Granted: 01/23/2014

Notice of Allowability	Application No. 13/825,083	Applicant(s) NA, JONGJU	
	Examiner DAVID C. COMSTOCK	Art Unit 3733	AIA (First Inventor to File) Status No

-- The MAILING DATE of this communication appears on the cover sheet with the correspondence address--

All claims being allowable, PROSECUTION ON THE MERITS IS (OR REMAINS) CLOSED in this application. If not included herewith (or previously mailed), a Notice of Allowance (PTOL-85) or other appropriate communication will be mailed in due course. **THIS NOTICE OF ALLOWABILITY IS NOT A GRANT OF PATENT RIGHTS.** This application is subject to withdrawal from issue at the initiative of the Office or upon petition by the applicant. See 37 CFR 1.313 and MPEP 1308.

1. ☒ This communication is responsive to *amendment filed 20 September 2015*.
   ☐ A declaration(s)/affidavit(s) under **37 CFR 1.130(b)** was/were filed on_____.
2. ☐ An election was made by the applicant in response to a restriction requirement set forth during the interview on _____; the restriction requirement and election have been incorporated into this action.
3. ☒ The allowed claim(s) is/are *1,2,4,5,7-12,14,15 and 17-24*. As a result of the allowed claim(s), you may be eligible to benefit from the **Patent Prosecution Highway** program at a participating intellectual property office for the corresponding application. For more information, please see http://www.uspto.gov/patents/init_events/pph/index.jsp or send an inquiry to PPHfeedback@uspto.gov .
4. ☒ Acknowledgment is made of a claim for foreign priority under 35 U.S.C. § 119(a)-(d) or (f).

   Certified copies:

   a) ☒ All b) ☐ Some *c) ☐ None of the:
   1. ☐ Certified copies of the priority documents have been received.
   2. ☐ Certified copies of the priority documents have been received in Application No. _____ .
   3. ☒ Copies of the certified copies of the priority documents have been received in this national stage application from the International Bureau (PCT Rule 17.2(a)).

   * Certified copies not received: _____.

Applicant has THREE MONTHS FROM THE "MAILING DATE" of this communication to file a reply complying with the requirements noted below. Failure to timely comply will result in ABANDONMENT of this application.
THIS THREE-MONTH PERIOD IS NOT EXTENDABLE.

5. ☐ CORRECTED DRAWINGS (as "replacement sheets") must be submitted.
   ☐ including changes required by the attached Examiner's Amendment / Comment or in the Office action of Paper No./Mail Date _____.

   Identifying indicia such as the application number (see 37 CFR 1.84(c)) should be written on the drawings in the front (not the back) of each sheet. Replacement sheet(s) should be labeled as such in the header according to 37 CFR 1.121(d).
6. ☐ DEPOSIT OF and/or INFORMATION about the deposit of BIOLOGICAL MATERIAL must be submitted. Note the attached Examiner's comment regarding REQUIREMENT FOR THE DEPOSIT OF BIOLOGICAL MATERIAL.

Attachment(s)

1. ☐ Notice of References Cited (PTO-892)
2. ☐ Information Disclosure Statements (PTO/SB/08), Paper No./Mail Date _____
3. ☐ Examiner's Comment Regarding Requirement for Deposit of Biological Material
4. ☐ Interview Summary (PTO-413), Paper No./Mail Date _____ .
5. ☐ Examiner's Amendment/Comment
6. ☐ Examiner's Statement of Reasons for Allowance
7. ☐ Other _____.

/DAVID C COMSTOCK/ Examiner, Art Unit 3733	/JERRY CUMBERLEDGE/ Primary Examiner, Art Unit 3733

UNITED STATES PATENT AND TRADEMARK OFFICE

UNITED STATES DEPARTMENT OF COMMERCE
United States Patent and Trademark Office
Address: COMMISSIONER FOR PATENTS
P.O. Box 1450
Alexandria, Virginia 22313-1450
www.uspto.gov

BIB DATA SHEET

CONFIRMATION NO. 9850

SERIAL NUMBER	FILING or 371(c) DATE	CLASS	GROUP ART UNIT	ATTORNEY DOCKET NO.
13/825,083	01/20/2014 **RULE**	600	3733	NA001KR_PCTUS

APPLICANTS

INVENTORS

Jongju Na, Songpa-Gu, KOREA, REPUBLIC OF;

**** CONTINUING DATA ****************************

This application is a 371 of PCT/KR2012/001335 02/22/2012
which claims benefit of 61/449,080 03/03/2011
and is a CON of 13/060,274 03/30/2011 PAT 8979912

**** FOREIGN APPLICATIONS ****************************

**** IF REQUIRED, FOREIGN FILING LICENSE GRANTED **** ** SMALL ENTITY **
01/23/2014

Foreign Priority claimed ☑ Yes ☐ No 35 USC 119(a-d) conditions met ☑ Yes ☐ No Verified and Acknowledged /DAVID C COMSTOCK/ Examiner's Signature	☐ Met after Allowance Initials	**STATE OR COUNTRY**	**SHEETS DRAWINGS**	**TOTAL CLAIMS**	**INDEPENDENT CLAIMS**
		KOREA, REPUBLIC OF	21	20	2

ADDRESS

MERLE W. RICHMAN, III
P.O. BOX 3333
LA JOLLA, CA 92038
UNITED STATES

TITLE

METHOD, SYSTEM, AND APPARATUS FOR DERMALOGICAL TREATMENT

FILING FEE RECEIVED 880	FEES: Authority has been given in Paper No._____ to charge/credit DEPOSIT ACCOUNT No._____ for following:	☐ All Fees ☐ 1.16 Fees (Filing) ☐ 1.17 Fees (Processing Ext. of time) ☐ 1.18 Fees (Issue) ☐ Other _____ ☐ Credit

UNITED STATES PATENT AND TRADEMARK OFFICE

UNITED STATES DEPARTMENT OF COMMERCE
United States Patent and Trademark Office
Address: COMMISSIONER FOR PATENTS
P.O. Box 1450
Alexandria, Virginia 22313-1450
www.uspto.gov

APPLICATION NUMBER	FILING or 371(c) DATE	GRP ART UNIT	FIL FEE REC'D	ATTY.DOCKET.NO	TOT CLAIMS	IND CLAIMS
13/825,083	01/20/2014		880	NA001KR_PCTUS	20	2

CONFIRMATION NO. 9850

26338
MERLE W. RICHMAN, III
P.O. BOX 3333
LA JOLLA, CA 92038

FILING RECEIPT

OC000000066212821

Date Mailed: 01/27/2014

Receipt is acknowledged of this non-provisional patent application. The application will be taken up for examination in due course. Applicant will be notified as to the results of the examination. Any correspondence concerning the application must include the following identification information: the U.S. APPLICATION NUMBER, FILING DATE, NAME OF APPLICANT, and TITLE OF INVENTION. Fees transmitted by check or draft are subject to collection. Please verify the accuracy of the data presented on this receipt. **If an error is noted on this Filing Receipt, please submit a written request for a Filing Receipt Correction. Please provide a copy of this Filing Receipt with the changes noted thereon. If you received a "Notice to File Missing Parts" for this application, please submit any corrections to this Filing Receipt with your reply to the Notice. When the USPTO processes the reply to the Notice, the USPTO will generate another Filing Receipt incorporating the requested corrections**

Inventor(s)

Jongju Na, Songpa-Gu, KOREA, REPUBLIC OF;

Applicant(s)

Jongju Na, Songpa-Gu, KOREA, REPUBLIC OF;

Power of Attorney: None

Domestic Priority data as claimed by applicant

This application is a 371 of PCT/KR2012/001335 02/22/2012
which claims benefit of 61/449,080 03/03/2011
and is a CON of 13/060,274 03/30/2011

Foreign Applications for which priority is claimed (You may be eligible to benefit from the **Patent Prosecution Highway** program at the USPTO. Please see http://www.uspto.gov for more information.) - None.
Foreign application information must be provided in an Application Data Sheet in order to constitute a claim to foreign priority. See 37 CFR 1.55 and 1.76.

If Required, Foreign Filing License Granted: 01/23/2014

The country code and number of your priority application, to be used for filing abroad under the Paris Convention, is **US 13/825,083**

Projected Publication Date: 05/08/2014

Non-Publication Request: No

Early Publication Request: No
**** SMALL ENTITY ****

PTO/SB/81A (12-08)
Approved for use through 03/31/2021. OMB 0651-0035
U.S. Patent and Trademark Office; U.S. DEPARTMENT OF COMMERCE
Under the Paperwork Reduction Act of 1995 no persons are required to respond to a collection of information unless it displays a valid OMB control number

PATENT - POWER OF ATTORNEY OR REVOCATION OF POWER OF ATTORNEY WITH A NEW POWER OF ATTORNEY AND CHANGE OF CORRESPONDENCE ADDRESS

Patent Number	9,320,536
Issue Date	04-26-2016
First Named Inventor	Jongju Na
Title	METHOD, SYSTEM, AND APPARATUS FOR DERMATOLOGICAL TREATMENT
Attorney Docket No.	NA001KR_PCTUS

I hereby revoke all previous powers of attorney given in the above-identified patent.

☐ A Power of Attorney is submitted herewith.

OR

☒ I hereby appoint Practitioner(s) associated with the Customer Number identified in the box at right as my/our attorney(s) or agent(s) with respect to the patent identified above, and to transact all business in the United States Patent and Trademark Office connected therewith: 167455

OR

☐ I hereby appoint Practitioner(s) named below as my/our attorney(s) or agent(s) with respect to the patent identified above, and to transact all business in the United States Patent and Trademark Office connected therewith:

Practitioner(s) Name	Registration Number

Please recognize or change the correspondence address for the above-identified patent to:

☒ The address associated with the above-identified Customer Number.

OR

☐ The address associated with the Customer Number identified in the box at right:

OR

☐ Firm or Individual Name					
Address					
City		State		Zip	
Country					
Telephone		Email			

I am the:

☐ Inventor, having ownership of the patent.

OR

☒ Patent owner.
Statement under 37 CFR 3.73(b) (Form PTO/SB/96) submitted herewith or filed on _____.

SIGNATURE of Inventor or Patent Owner

Signature		Date	Feb 07, 2021
Name	Jongju Na	Telephone	949.606.3885
Title and Company	General Manager, Serendia LLC		

NOTE: Signatures of all the inventors or patent owners of the entire interest or their representative(s) are required. If more than one signature is required, submit multiple forms, check the box below, and identify the total number of forms submitted in the blank below.

☐ A total of _____ forms are submitted.

This collection of information is required by 37 CFR 1.31, 1.32, and 1.33. The information is required to obtain or retain a benefit by the public, which is to update (and by the USPTO to process) the file of a patent or reexamination proceeding. Confidentiality is governed by 35 U.S.C. 122 and 37 CFR 1.14. This collection is estimated to take 15 minutes to complete, including gathering, preparing, and submitting the completed application form to the USPTO. Time will vary depending upon the individual case. Any comments on the amount of time you require to complete this form and/or suggestions for reducing this burden, should be sent to the Chief Information Officer, U.S. Patent and Trademark Office, U.S. Department of Commerce, P.O. Box 1450, Alexandria, VA 22313-1450. DO NOT SEND FEES OR COMPLETED FORMS TO THIS ADDRESS. **SEND TO: Commissioner for Patents, P.O. Box 1450, Alexandria, VA 22313-1450.**
If you need assistance in completing the form, call 1-800-PTO-9199 and select option 2.

PTO/SB/96 (11-18)
Approved for use through 11/30/2020. OMB 0651-0031
U.S. Patent and Trademark Office; U.S. DEPARTMENT OF COMMERCE
Under the Paperwork Reduction Act of 1995, no persons are required to respond to a collection of information unless it displays a valid OMB control number.

STATEMENT UNDER 37 CFR 3.73(b)

Applicant/Patent Owner: SERENDIA LLC

Application No./Patent No.: 9,320,536 Filed/Issue Date: 04-26-2016

Titled:
METHOD, SYSTEM, AND APPARATUS FOR DERMATOLOGICAL TREATMENT

SERENDIA LLC, a Corporation
(Name of Assignee) (Type of Assignee, e.g., corporation, partnership, university, government agency, etc.

states that it is:

1. ☒ the assignee of the entire right, title, and interest in;

2. ☐ an assignee of less than the entire right, title, and interest in
(The extent (by percentage) of its ownership interest is _____ %); or

3. ☐ the assignee of an undivided interest in the entirety of (a complete assignment from one of the joint inventors was made)

the patent application/patent identified above, by virtue of either:

A. ☐ An assignment from the inventor(s) of the patent application/patent identified above. The assignment was recorded in the United States Patent and Trademark Office at Reel_____, Frame_____, or a copy* is attached.

OR

B. ☒ A chain of title from the inventor(s), of the patent application/patent identified above, to the current assignee as follows:

1. From: NA, JONGJU, MR To: VIOL CO. LTD.

The document was recorded in the United States Patent and Trademark Office at
Reel 044884, Frame 0746, or a copy* is attached.

2. From: VIOL CO., LTD. To: SERENDIA LLC

The document was recorded in the United States Patent and Trademark Office at
Reel 054503, Frame 0344, or a copy* is attached.

3. From: _____ To: _____

The document was recorded in the United States Patent and Trademark Office at
Reel_____, Frame_____, or a copy* is attached.

☐ Additional documents in the chain of title are listed on a supplemental sheet(s).

☐ *As required by 37 CFR 3.73(b)(1)(i), if a copy/copies is/are attached, the documentary evidence of the chain of title from the original owner to the assignee was, or concurrently is being, submitted for recordation pursuant to 37 CFR 3.11.

[NOTE: A separate copy (*i.e.*, a true copy of the original assignment document(s)) must be submitted to Assignment Division in accordance with 37 CFR Part 3, to record the assignment in the records of the USPTO. See MPEP 302.]

The undersigned (whose title is supplied below) is authorized to act on behalf of the assignee.

Signature _____ Date: Feb 07, 2021

Jongju Na
Printed or Typed Name

General Manager
Title or Registration Number

This collection of information is required by 37 CFR 3.73(b). The information is required to obtain or retain a benefit by the public which is to file (and by the USPTO to process) an application. Confidentiality is governed by 35 U.S.C. 122 and 37 CFR 1.11 and 1.14. This collection is estimated to take 12 minutes to complete, including gathering, preparing, and submitting the completed application form to the USPTO. Time will vary depending upon the individual case. Any comments on the amount of time you require to complete this form and/or suggestions for reducing this burden, should be sent to the Chief Information Officer, U.S. Patent and Trademark Office, U.S. Department of Commerce, P.O. Box 1450, Alexandria, VA 22313-1450. DO NOT SEND FEES OR COMPLETED FORMS TO THIS ADDRESS. **SEND TO: Commissioner for Patents, P.O. Box 1450, Alexandria, VA 22313-1450.**

If you need assistance in completing the form, call 1-800-PTO-9199 and select option 2.

IN THE UNITED STATES PATENT AND TRADEMARK OFFICE

In re Patent Application of:		Patent No.:	9,320,536
Jongju Na		Group Art Unit:	3733
Serial No.:	13/825,083	Confirmation No.:	9850
Filing Date:	January 20, 2014	Attorney Docket No.:	NA001KR_PCTUS

Title: METHOD, SYSTEM, AND APPARATUS FOR DERMATOLOGICAL TREATMENT

Commissioner for Patents
Office of Data Management Attention: Certificates of Correction Branch
P.O. Box 1450
Alexandria, VA 22313-1450

REQUEST FOR EXPEDITED ISSUANCE OF CERTIFICATE OF CORRECTION UNDER 37 C.F.R. § 1.322 FOR ERROR ATTRIBUTABLE TO OFFICE

Sir or Madam:

Patentee respectfully requests that this Request for Expedited Issuance of Certificate of Correction for error attributable to Office be granted for the following reasons.

As evidenced by various records on file with the Office, and as attached hereto, including:

Official Filing Receipts issued on January 27, 2014 and January 20, 2016;

Acknowledgment of a claim for foreign priority made by the Examiner in the Notice of Allowance issued on January 14, 2016;

Amendments to the Specification filed on February 25, 2016; and

The Office's Response to Amendment under Rule 312 dated march 3, 2016 (entering the Amendment filed on February 25, 2016),

claims for priority to and benefit of Korean Patent Application No. 10-2008-0076993, International Patent Application No. PCT/US08/74131, and United States Patent Application

Nos. 13/060,274 and 61/449,080 were made under 35 U.S.C. § 119, 120, and 365(c), and acknowledged by the Office. However, United States Patent No. 9,320,536, as issued on April 26, 2016, does not indicate these claims of priority and benefit, which Patentee asserts is error attributable solely to the Office.

Per the guidance in MPEP § 1480.01 for requesting expedited issuance of certificates of correction, submitted herewith is PTO Form PTO/SB/44 for United States Patent No. 9,320,536, correcting the information as described below:

On the cover page of United States Patent No. 9,320,536, please insert Related U.S. Application Data, and please insert --Continuation of Application No. 13/060,274, filed as application No. PCT/US2008/074131 on Aug. 22, 2008, now Pat. No. 8,979,972.—on item (63). Please also insert --Provisional Application No. 61/449,080, filed on Mar. 3, 2011-- on the item (60).

On the cover page of United States Patent No. 9,320,536, please insert Foreign Application Priority Data, and please insert --Aug. 8, 2008 (KR) 10-2008-0076993-- on the item (30).

Prompt and favorable consideration of this Request is respectfully requested.

Respectfully submitted,

/benjamin c rothermel/

Benjamin C. Rothermel
Reg. No. 61,893

Date: February 8, 2021

CUSTOMER NO. 167455
Capitol IP Law Group, PLLC

Electronic Acknowledgement Receipt

EFS ID:	41865743
Application Number:	13825083
International Application Number:	
Confirmation Number:	9850
Title of Invention:	METHOD, SYSTEM, AND APPARATUS FOR DERMATOLOGICAL TREATMENT
First Named Inventor/Applicant Name:	Jongju Na
Customer Number:	26338
Filer:	Benjamin Caen Rothermel
Filer Authorized By:	
Attorney Docket Number:	NA001KR_PCTUS
Receipt Date:	08-FEB-2021
Filing Date:	20-JAN-2014
Time Stamp:	15:48:14
Application Type:	U.S. National Stage under 35 USC 371

Payment information:

Submitted with Payment	no

File Listing:

Document Number	Document Description	File Name	File Size(Bytes)/ Message Digest	Multi Part /.zip	Pages (if appl.)
1	Request for Certificate of Correction	PVI0001US_CertificateCorrection.pdf	179942 a56afb6d649b42651724613c1ceb04837ba9c950	no	2

Warnings:

Information:					
2	Request for Certificate of Correction	PVI0001US_CoCattachments.pdf	553439 4838fa9f08a467a99cf69d84725f23271c5aa3da	no	8
Warnings:					
Information:					
3	Power of Attorney	PVI0001US_POA_SIGNED.pdf	196811 f39b983ac50bc59eebc4d8705e84275b22935dd6	no	1
Warnings:					
Information:					
4	Assignee showing of ownership per 37 CFR 3.73	PVI0001US_373_SIGNED.pdf	106562 b6922eb6db8e76bc23ff43e3ddd96e7dbf84381a	no	1
Warnings:					
Information:					
5	Transmittal Letter	PVI0001US_CoCTransmittalLtr.pdf	31467 58c78d67fdc046f63f9011113a45008f0a9650f4	no	2
Warnings:					
Information:					
			Total Files Size (in bytes):	1068221	

This Acknowledgement Receipt evidences receipt on the noted date by the USPTO of the indicated documents, characterized by the applicant, and including page counts, where applicable. It serves as evidence of receipt similar to a Post Card, as described in MPEP 503.

<u>New Applications Under 35 U.S.C. 111</u>
If a new application is being filed and the application includes the necessary components for a filing date (see 37 CFR 1.53(b)-(d) and MPEP 506), a Filing Receipt (37 CFR 1.54) will be issued in due course and the date shown on this Acknowledgement Receipt will establish the filing date of the application.
<u>National Stage of an International Application under 35 U.S.C. 371</u>
If a timely submission to enter the national stage of an international application is compliant with the conditions of 35 U.S.C. 371 and other applicable requirements a Form PCT/DO/EO/903 indicating acceptance of the application as a national stage submission under 35 U.S.C. 371 will be issued in addition to the Filing Receipt, in due course.
<u>New International Application Filed with the USPTO as a Receiving Office</u>
If a new international application is being filed and the international application includes the necessary components for an international filing date (see PCT Article 11 and MPEP 1810), a Notification of the International Application Number and of the International Filing Date (Form PCT/RO/105) will be issued in due course, subject to prescriptions concerning national security, and the date shown on this Acknowledgement Receipt will establish the international filing date of the application.

UNITED STATES PATENT AND TRADEMARK OFFICE

UNITED STATES DEPARTMENT OF COMMERCE
United States Patent and Trademark Office
Address: COMMISSIONER FOR PATENTS
P.O. Box 1450
Alexandria, Virginia 22313-1450
www.uspto.gov

APPLICATION NUMBER	FILING OR 371(C) DATE	FIRST NAMED APPLICANT	ATTY. DOCKET NO./TITLE
13/825,083	01/20/2014	Jongju Na	NA001KR_PCTUS

CONFIRMATION NO. 9850

POA ACCEPTANCE LETTER

167455
Capitol IP Law Group, PLLC
1918 18th St., Unit 4, NW
Washington, DC 20009

OC000000123331641

Date Mailed: 02/12/2021

NOTICE OF ACCEPTANCE OF POWER OF ATTORNEY

This is in response to the Power of Attorney filed 02/08/2021.

The Power of Attorney in this application is accepted. Correspondence in this application will be mailed to the above address as provided by 37 CFR 1.33.

Questions about the contents of this notice and the requirements it sets forth should be directed to the Office of Data Management, Application Assistance Unit, at **(571) 272-4000** or **(571) 272-4200** or **1-888-786-0101**.

/vnguyen/

To: patent@capitoliplaw.com,,
From: PAIR_eOfficeAction@uspto.gov
Cc: PAIR_eOfficeAction@uspto.gov
Subject: Private PAIR Correspondence Notification for Customer Number 167455

Feb 12, 2021 03:37:23 AM

Dear PAIR Customer:

Capitol IP Law Group, PLLC
1918 18th St., Unit 4, NW
Washington, DC 20009
UNITED STATES

The following USPTO patent application(s) associated with your Customer Number, 167455 , have new outgoing correspondence. This correspondence is now available for viewing in Private PAIR.

The official date of notification of the outgoing correspondence will be indicated on the form PTOL-90 accompanying the correspondence.

Disclaimer:
The list of documents shown below is provided as a courtesy and is not part of the official file wrapper. The content of the images shown in PAIR is the official record.

Application	Document	Mailroom Date	Attorney Docket No.
13825083	N570	02/12/2021	NA001KR_PCTUS

To view your correspondence online or update your email addresses, please visit us anytime at https://sportal.uspto.gov/secure/myportal/privatepair.

If you have any questions, please email the Electronic Business Center (EBC) at EBC@uspto.gov with 'e-Office Action' on the subject line or call 1-866-217-9197 during the following hours:

Monday - Friday 6:00 a.m. to 12:00 a.m.

Thank you for prompt attention to this notice,

UNITED STATES PATENT AND TRADEMARK OFFICE

PATENT APPLICATION INFORMATION RETRIEVAL SYSTEM

UNITED STATES PATENT AND TRADEMARK OFFICE

CERTIFICATE OF CORRECTION

PATENT NO. : 9,320,536 B2
APPLICATION NO. : 13/825083
DATED : April 26, 2016
INVENTOR(S) : Jongju Na

It is certified that error appears in the above-identified patent and that said Letters Patent is hereby corrected as shown below:

On the Title Page

Item (63) Related U.S. Application Data, should be listed:
--Continuation of Application No. 13/060,274, filed as application No. PCT/US2008/074131 on Aug. 22, 2008, now Pat. No. 8,979,972--.

Item (60) should be listed:
--Provisional Application No. 61/449,080, filed on Mar. 3, 2011--.

Item (30) Foreign Application Priority Data, should be listed:
--Aug. 8, 2008 (KR) 10-2008-0076993--.

Signed and Sealed this
Ninth Day of March, 2021

Drew Hirshfeld
Performing the Functions and Duties of the
Under Secretary of Commerce for Intellectual Property and
Director of the United States Patent and Trademark Office

AO 120 (Rev. 08/10)

TO: Mail Stop 8 Director of the U.S. Patent and Trademark Office P.O. Box 1450 Alexandria, VA 22313-1450	REPORT ON THE FILING OR DETERMINATION OF AN ACTION REGARDING A PATENT OR TRADEMARK

In Compliance with 35 U.S.C. § 290 and/or 15 U.S.C. § 1116 you are hereby advised that a court action has been filed in the U.S. District Court for the Western District of Texas on the following

☐ Trademarks or ☑ Patents. (☐ the patent action involves 35 U.S.C. § 292.):

DOCKET NO.	DATE FILED	U.S. DISTRICT COURT
6:21-cv-811	8/6/2021	for the Western District of Texas

PLAINTIFF	DEFENDANT
SYNKLOUD TECHNOLOGIES, LLC and SERENDIA, LLC	SUNG HWAN E&B CO., LTD.

	PATENT OR TRADEMARK NO.	DATE OF PATENT OR TRADEMARK	HOLDER OF PATENT OR TRADEMARK
1	US 9,320,536 B2	4/26/2016	Serendia, LLC
2	US 9,480,836 B2	11/1/2016	Serendia, LLC
3	US 10,058,379 B2	8/28/2018	Serendia, LLC
4	US 10,869,812 B2	12/22/2020	Serendia, LLC
5			

In the above—entitled case, the following patent(s)/ trademark(s) have been included:

DATE INCLUDED	INCLUDED BY ☐ Amendment ☐ Answer ☐ Cross Bill ☐ Other Pleading	
PATENT OR TRADEMARK NO.	DATE OF PATENT OR TRADEMARK	HOLDER OF PATENT OR TRADEMARK
1		
2		
3		
4		
5		

In the above—entitled case, the following decision has been rendered or judgement issued:

DECISION/JUDGEMENT

CLERK	(BY) DEPUTY CLERK	DATE

Copy 1—Upon initiation of action, mail this copy to Director **Copy 3—Upon termination of action, mail this copy to Director**
Copy 2—Upon filing document adding patent(s), mail this copy to Director **Copy 4—Case file copy**

AO 120 (Rev. 08/10)

TO: Mail Stop 8 Director of the U.S. Patent and Trademark Office P.O. Box 1450 Alexandria, VA 22313-1450	**REPORT ON THE FILING OR DETERMINATION OF AN ACTION REGARDING A PATENT OR TRADEMARK**

In Compliance with 35 U.S.C. § 290 and/or 15 U.S.C. § 1116 you are hereby advised that a court action has been filed in the U.S. District Court Eastern District of New York on the following

☐ Trademarks or ☑ Patents. (☐ the patent action involves 35 U.S.C. § 292.):

DOCKET NO.	DATE FILED	U.S. DISTRICT COURT
21cv4423(GRB)(ARL)	8/6/2021	Eastern District of New York

PLAINTIFF	DEFENDANT
Synkloud Technologies, LLC and Serendia, LLC	Cartessa Aesthetics, LLC

	PATENT OR TRADEMARK NO.	DATE OF PATENT OR TRADEMARK	HOLDER OF PATENT OR TRADEMARK
1	US 9,320,536 B2	4/26/2016	Serendia, LLC
2	US 9,480,836 B2	11/1/2016	Serendia, LLC
3	US 10,058,379 B2	8/28/2018	Serendia, LLC
4	US 10,869,812 B2	12/22/2020	Serendia, LLC
5			

In the above—entitled case, the following patent(s)/ trademark(s) have been included:

DATE INCLUDED	INCLUDED BY ☐ Amendment ☐ Answer ☐ Cross Bill ☐ Other Pleading	
PATENT OR TRADEMARK NO.	DATE OF PATENT OR TRADEMARK	HOLDER OF PATENT OR TRADEMARK
1		
2		
3		
4		
5		

In the above—entitled case, the following decision has been rendered or judgement issued:

DECISION/JUDGEMENT

CLERK	(BY) DEPUTY CLERK	DATE
DOUGLAS C. PALMER	Deanna Rodin	8/9/2021

Copy 1—Upon initiation of action, mail this copy to Director **Copy 3—Upon termination of action, mail this copy to Director**
Copy 2—Upon filing document adding patent(s), mail this copy to Director **Copy 4—Case file copy**

The United States Patent and Trademark Office
PATENT TRIAL AND APPEAL BOARD

A petition has been filed in Patent Number 9,320,536, Application Number 13/825,083 on 12/28/2021 (Date).

The Case Number is IPR2022-00378.
(IPR, CBM, PGR, DER #)

To view the documents filed in this petition, go to https://ptab.uspto.gov.

Use the Search PTAB tab and enter the Patent Number or the Trial or Case Number and select the Search button.

Questions regarding this notice should be directed to the Patent Trial and Appeal Board at 571-272-7822.

AO 120 (Rev. 08/10)

TO: Mail Stop 8 Director of the U.S. Patent and Trademark Office P.O. Box 1450 Alexandria, VA 22313-1450	REPORT ON THE FILING OR DETERMINATION OF AN ACTION REGARDING A PATENT OR TRADEMARK

In Compliance with 35 U.S.C. § 290 and/or 15 U.S.C. § 1116 you are hereby advised that a court action has been filed in the U.S. District Court for the District of Arizona on the following

☐ Trademarks or ☑ Patents. (☐ the patent action involves 35 U.S.C. § 292.):

DOCKET NO.	DATE FILED	U.S. DISTRICT COURT
2:22-cv-00015-PHX-DLR	1/6/2022	for the District of Arizona

PLAINTIFF	DEFENDANT
SynKloud Technologies LLC, et al.	Aesthetics Biomedical Incorporated

PATENT OR TRADEMARK NO.	DATE OF PATENT OR TRADEMARK	HOLDER OF PATENT OR TRADEMARK
1 US 9,320,536 B2	4/26/2016	Serendia, LLC
2 US 9,480,836 B2	11/1/2016	Serendia, LLC
3 US 10,058,379 B2	8/28/2018	Serendia, LLC
4 US 10,869,812 B2	12/22/2020	Serendia, LLC
5		

In the above—entitled case, the following patent(s)/ trademark(s) have been included:

DATE INCLUDED	INCLUDED BY ☐ Amendment ☐ Answer ☐ Cross Bill ☐ Other Pleading	
PATENT OR TRADEMARK NO.	DATE OF PATENT OR TRADEMARK	HOLDER OF PATENT OR TRADEMARK
1		
2		
3		
4		
5		

In the above—entitled case, the following decision has been rendered or judgement issued:

DECISION/JUDGEMENT

CLERK	(BY) DEPUTY CLERK	DATE
Debra D Lucas	Rebecca E Kalbza	1/07/2022

Copy 1—Upon initiation of action, mail this copy to Director Copy 3—Upon termination of action, mail this copy to Director
Copy 2—Upon filing document adding patent(s), mail this copy to Director Copy 4—Case file copy