US010869812B2

(12) **United States Patent**
Na

(10) **Patent No.: US 10,869,812 B2**
(45) **Date of Patent: Dec. 22, 2020**

(54) **METHOD, SYSTEM, AND APPARATUS FOR DERMATOLOGICAL TREATMENT**

(71) Applicant: **Jongju Na**, Songpa-Gu (KR)

(72) Inventor: **Jongju Na**, Songpa-Gu (KR)

(*) Notice: Subject to any disclaimer, the term of this patent is extended or adjusted under 35 U.S.C. 154(b) by 0 days.

(21) Appl. No.: **15/724,261**

(22) Filed: **Oct. 3, 2017**

(65) **Prior Publication Data**

US 2018/0104145 A1 Apr. 19, 2018

Related U.S. Application Data

(63) Continuation of application No. 15/096,686, filed on Apr. 12, 2016, now Pat. No. 9,775,774, which is a (Continued)

(30) **Foreign Application Priority Data**

Aug. 6, 2008 (KR) 10-2008-0076993

(51) **Int. Cl.**
A61H 39/08 (2006.01)
A61H 15/02 (2006.01)
(Continued)

(52) **U.S. Cl.**
CPC ***A61H 39/086*** (2013.01); ***A61H 15/02*** (2013.01); ***A61H 39/002*** (2013.01);
(Continued)

(58) **Field of Classification Search**
CPC A61H 15/02; A61H 39/086; A61H 39/002; A61H 37/00; A61H 23/02; A61H 2015/0014; A61H 2039/005; A61H 2201/0153; A61H 2201/105; A61H 2201/1207; A61H 2201/1604; A61H 2201/169; A61H 2201/5007; A61H 2201/5097; A61H 2205/022; A61H 2205/04; A61H 2205/06; A61H 2205/065; A61H 2205/084; A61H 2205/10; A61H 2205/12; A61N 1/0502; A61N 1/328;
(Continued)

(56) **References Cited**

U.S. PATENT DOCUMENTS

4,180,079 A 12/1979 Wing
5,465,593 A 11/1995 Takasu
(Continued)

FOREIGN PATENT DOCUMENTS

JP 08-088040 A 4/1996
JP 25-43161 Y2 8/1997
(Continued)

OTHER PUBLICATIONS

Translated Written Opinion of the International Searching Authority for International application No. PCT/KR2012/001335 dated Sep. 28, 2012 (7 pages).
(Continued)

Primary Examiner — Eduardo C Robert
Assistant Examiner — David C Comstock
(74) *Attorney, Agent, or Firm* — Merle W. Richman. Esq.

(57) **ABSTRACT**

Embodiments of dermatological cell treatment are described generally herein. Other embodiments may be described and claimed.

20 Claims, 21 Drawing Sheets

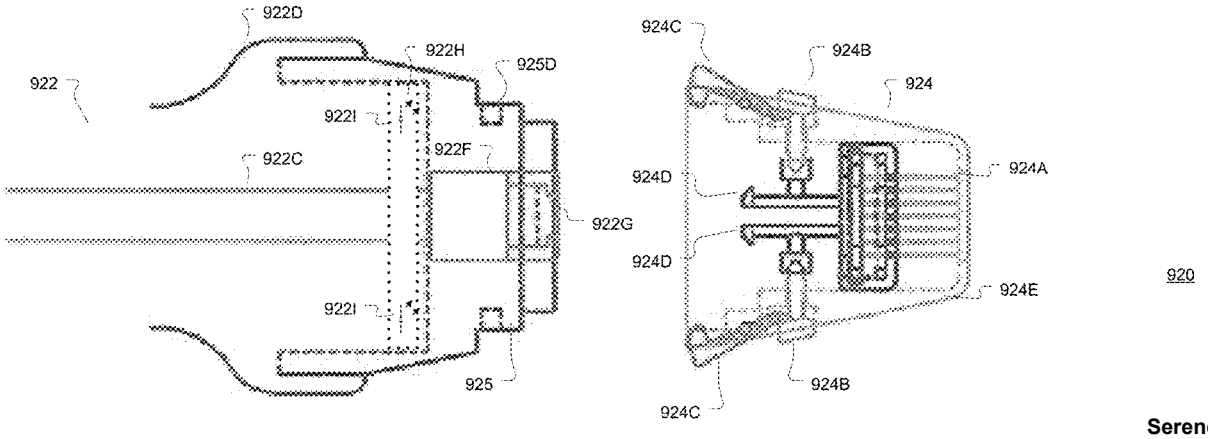

Serendia, LLC
Exhibit 2116
Jeisys v. Serendia
IPR2024-00383
Ex. 2116-001

Related U.S. Application Data

continuation of application No. 13/825,083, filed as application No. PCT/KR2012/001335 on Feb. 22, 2012, now Pat. No. 9,320,536, which is a continuation of application No. 13/060,274, filed as application No. PCT/US2008/074131 on Aug. 22, 2008, now Pat. No. 8,979,912.

(60) Provisional application No. 61/449,080, filed on Mar. 3, 2011.

(51) **Int. Cl.**

A61M 37/00	(2006.01)
A61H 39/00	(2006.01)
A61N 5/06	(2006.01)
A61N 1/05	(2006.01)
A61N 1/32	(2006.01)
A61N 1/36	(2006.01)
A61H 23/02	(2006.01)
A61H 15/00	(2006.01)
A61B 17/34	(2006.01)

(52) **U.S. Cl.**

CPC ***A61H 39/007*** (2013.01); ***A61M 37/00*** (2013.01); ***A61N 1/0502*** (2013.01); ***A61N 1/328*** (2013.01); ***A61N 1/36017*** (2013.01); ***A61N 5/062*** (2013.01); ***A61N 5/0616*** (2013.01); ***A61N 5/0624*** (2013.01); *A61B 2017/3409* (2013.01); *A61H 23/02* (2013.01); *A61H 2015/0014* (2013.01); *A61H 2039/005* (2013.01); *A61H 2201/0153* (2013.01); *A61H 2201/105* (2013.01); *A61H 2201/1207* (2013.01); *A61H 2201/1604* (2013.01); *A61H 2201/169* (2013.01); *A61H 2201/5007* (2013.01); *A61H 2201/5097* (2013.01); *A61H 2205/022* (2013.01); *A61H 2205/04* (2013.01); *A61H 2205/06* (2013.01); *A61H 2205/065* (2013.01); *A61H 2205/084* (2013.01); *A61H 2205/10* (2013.01); *A61H 2205/12* (2013.01); *A61M 2037/0007* (2013.01); *A61M 2037/0023* (2013.01); *A61M 2205/8206* (2013.01); *A61N 2005/0644* (2013.01); *A61N 2005/0652* (2013.01); *A61N 2005/0659* (2013.01); *A61N 2005/0661* (2013.01)

(58) **Field of Classification Search**

CPC .. A61N 1/36017; A61N 5/0616; A61N 5/062; A61N 5/0624; A61N 2005/0644; A61N 2005/0652; A61N 2005/0659; A61N 2005/0661; A61B 2017/3409; A61M 2037/0007; A61M 2037/0023; A61M 2205/8206

USPC 600/249; 607/88, 102, 189, 115; 604/20, 604/46, 21, 117; 606/9; 601/2; 424/1.11

See application file for complete search history.

(56) **References Cited**

U.S. PATENT DOCUMENTS

5,546,954	A	8/1996	Yamada	
5,873,840	A	2/1999	Bernard	
5,993,269	A	11/1999	Ito	
6,523,420	B2	2/2003	Lee	
6,890,319	B1	5/2005	Crocker	
6,931,277	B1	8/2005	Yuzhakov et al.	
7,133,717	B2	11/2006	Coston et al.	
7,618,429	B2	11/2009	Mulholland	
7,824,394	B2	11/2010	Manstein	
8,540,705	B2	9/2013	Mehta	
8,666,487	B2	3/2014	Kang	
8,979,912	B2	3/2015	Na et al.	
9,320,536	B2 *	4/2016	Na	A61N 1/30
9,480,836	B2	11/2016	Na	
2004/0058882	A1	3/2004	Eriksson et al.	
2005/0222565	A1	10/2005	Manstein	
2006/0293725	A1	12/2006	Rubinsky et al.	
2007/0038181	A1	2/2007	Melamud	
2007/0066094	A1	3/2007	Kim	
2007/0073217	A1	3/2007	James	
2007/0142885	A1	6/2007	Hantash et al.	
2007/0231255	A1	10/2007	Barolet et al.	
2007/0232962	A1	10/2007	Zumeris et al.	
2007/0276318	A1	11/2007	Henley	
2008/0014627	A1	1/2008	Merchant et al.	
2008/0082090	A1	4/2008	Manstein	
2008/0091182	A1	4/2008	Mehta	
2008/0114298	A1	5/2008	Cantor et al.	
2008/0269666	A1	10/2008	Wang et al.	
2008/0281389	A1	11/2008	Knopp	
2009/0312691	A1	12/2009	Kim et al.	
2011/0046615	A1	2/2011	Manstein	
2015/0217141	A1 *	8/2015	Barthe	A61N 7/00 601/2

FOREIGN PATENT DOCUMENTS

JP	11-307161	A	11/1999
JP	2000-039449	A	2/2000
JP	2002-117926	A	4/2002
JP	2005-351785	A	12/2005
JP	2009-506873	A	2/2009
KR	20-0172727		12/1999
KR	20-0176242		1/2000
KR	20-0201331	Y1	8/2000
KR	10-0308121	B1	8/2001
KR	20-0268667	Y1	3/2002
KR	20-0284460	Y1	7/2002
KR	10-0555713	B1	2/2006
KR	10-2006-0027194	A	3/2006
KR	10-2006-0061011	A	6/2006
KR	10-2010-001828	A	2/2010
KR	10-2010-0055292	A	5/2010
KR	10-2011-0002210	A	1/2011
WO	00/74763	A2	12/2000
WO	2005/058407	A1	6/2005
WO	2005/096979	A1	10/2005
WO	2008/004781	A1	10/2008

OTHER PUBLICATIONS

Translated International Search report for International application No. PCT/KR2012/004695 dated Sep. 28, 2012 (3 pages) PCT/KR2012/001335 dated Sep. 28, 2012 (3 pages).

Translated Written Opinion of the International Searching Authority for International application No. PCT/KR2012/004695 dated Jan. 2, 2013 (7 pages).

Translated International Search report for International application No. PCT/KR2012/004695 dated Dec. 31, 2012 (2 pages).

* cited by examiner

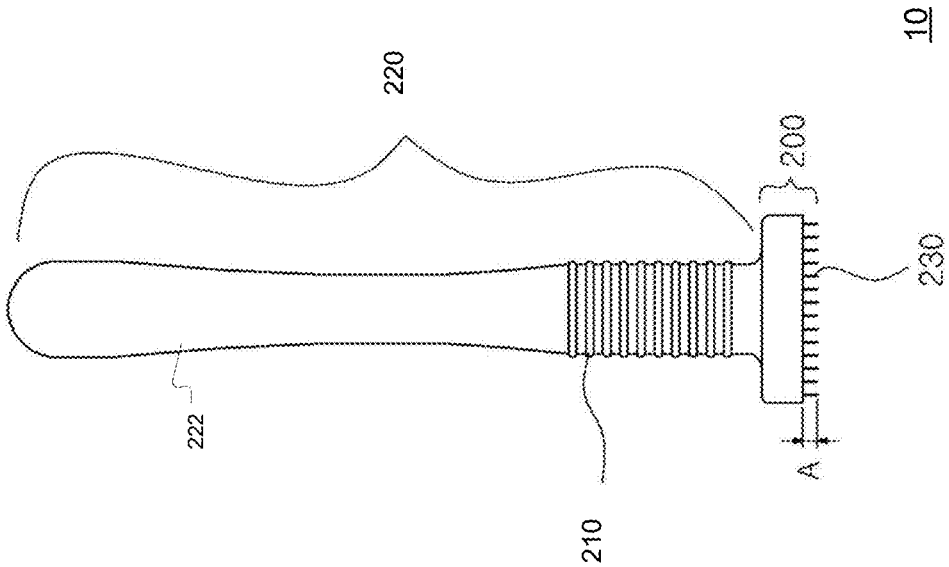

FIGURE 1B

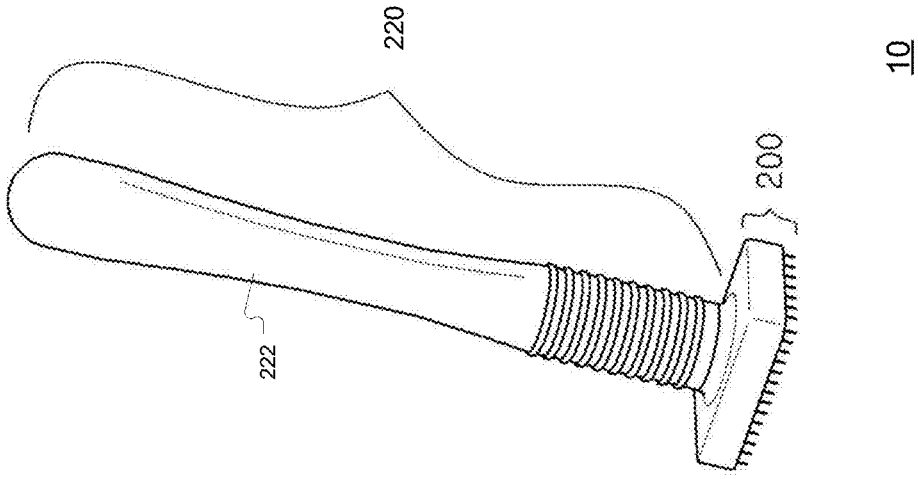

FIGURE 1A

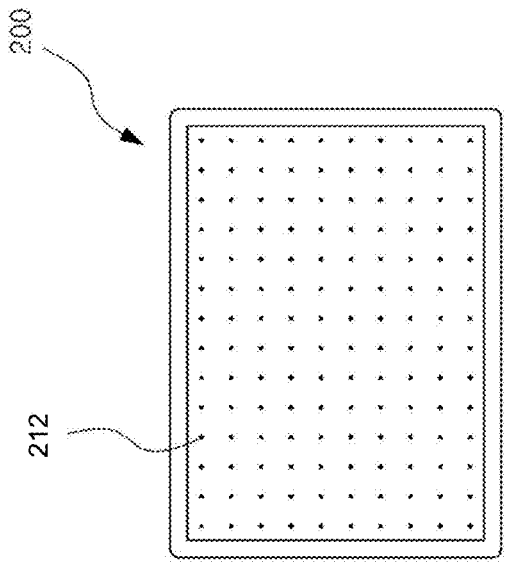

FIGURE 1D

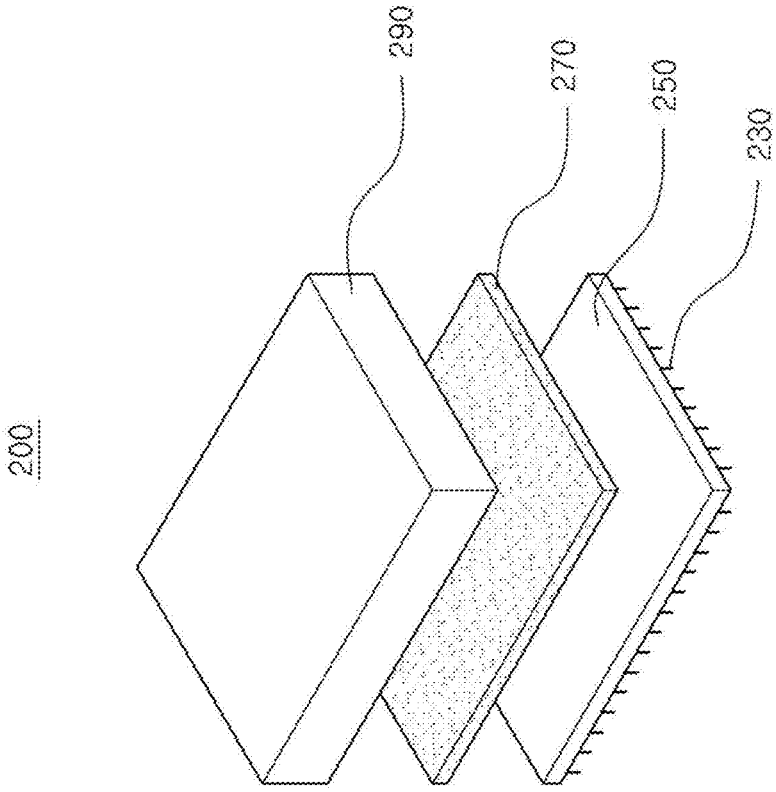

FIGURE 1C

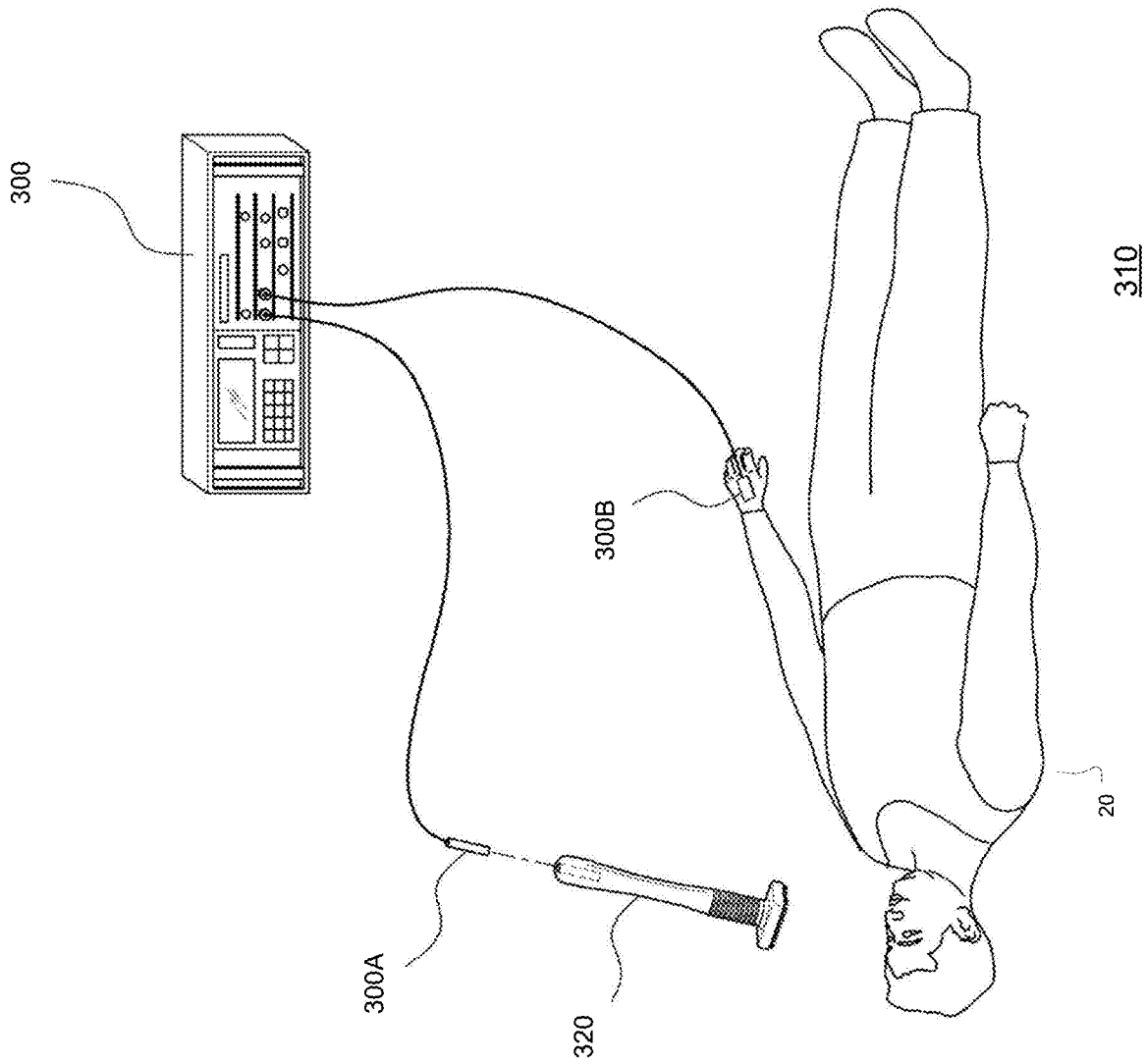

FIGURE 2A

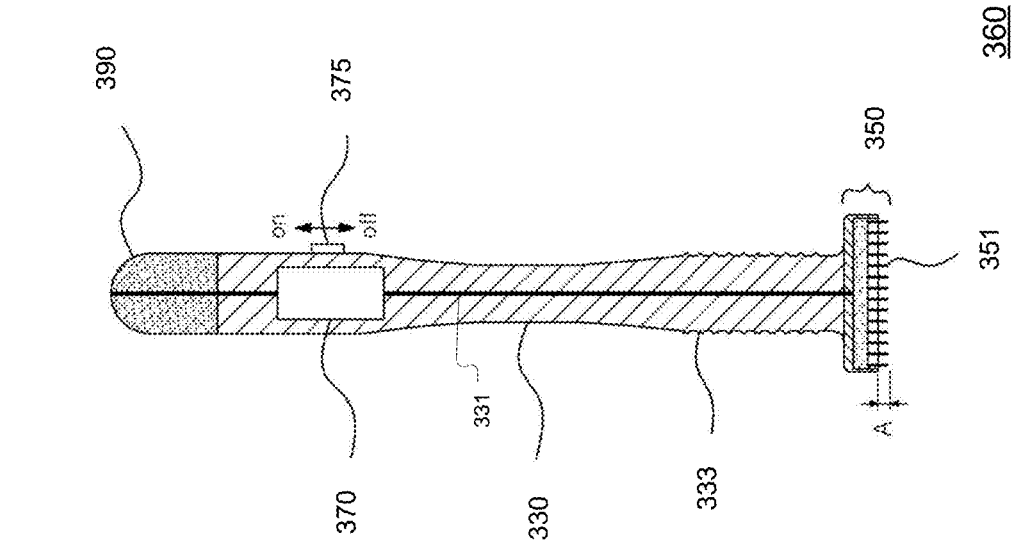

FIGURE 2C

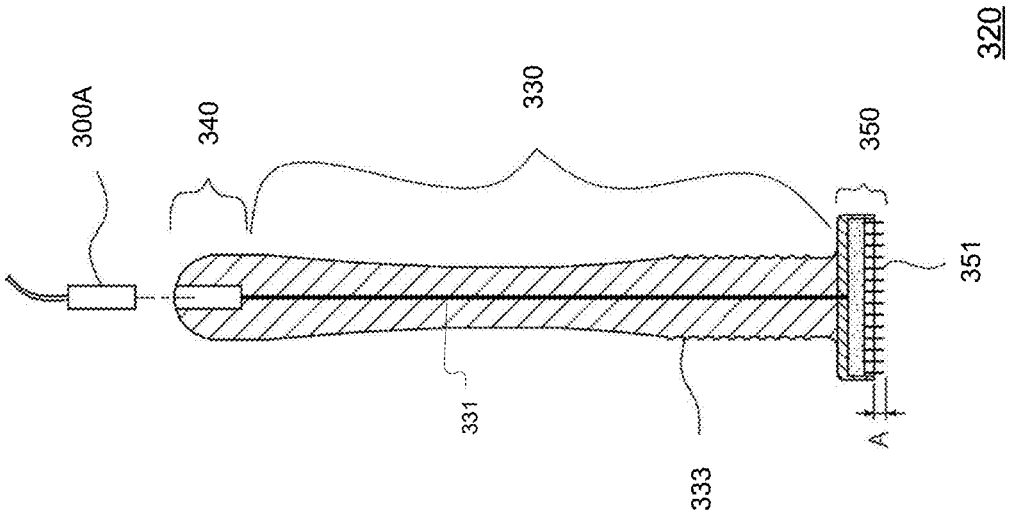

FIGURE 2B

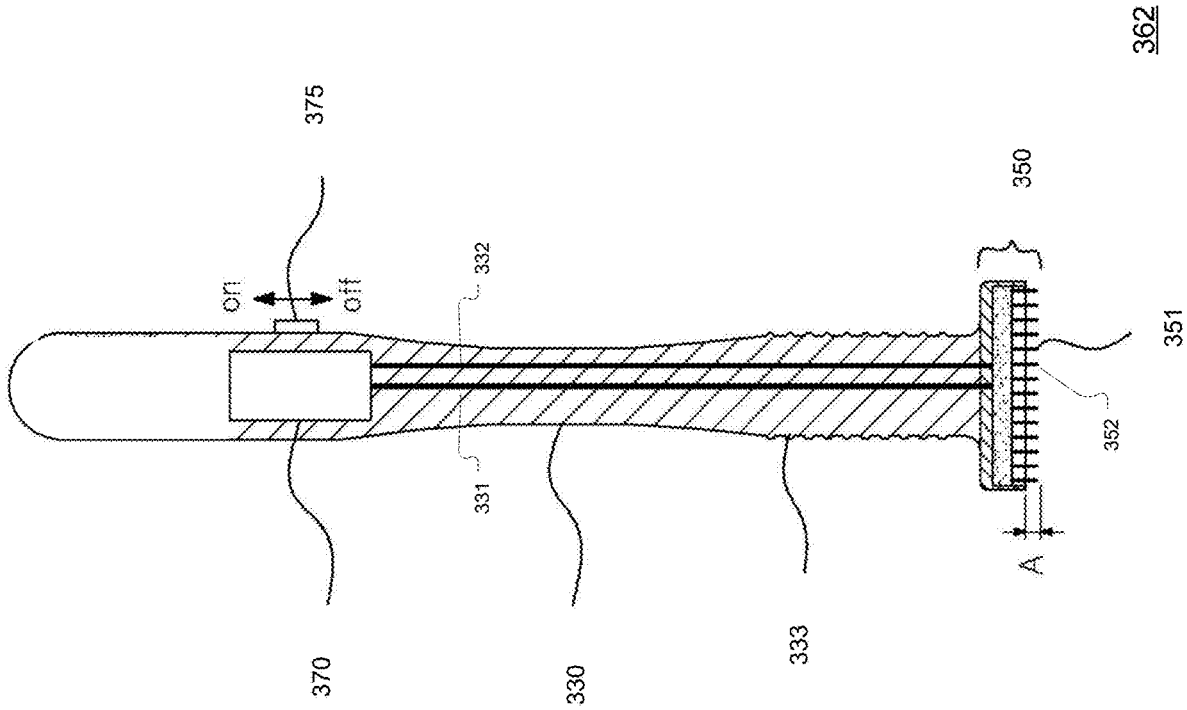

FIGURE 2D

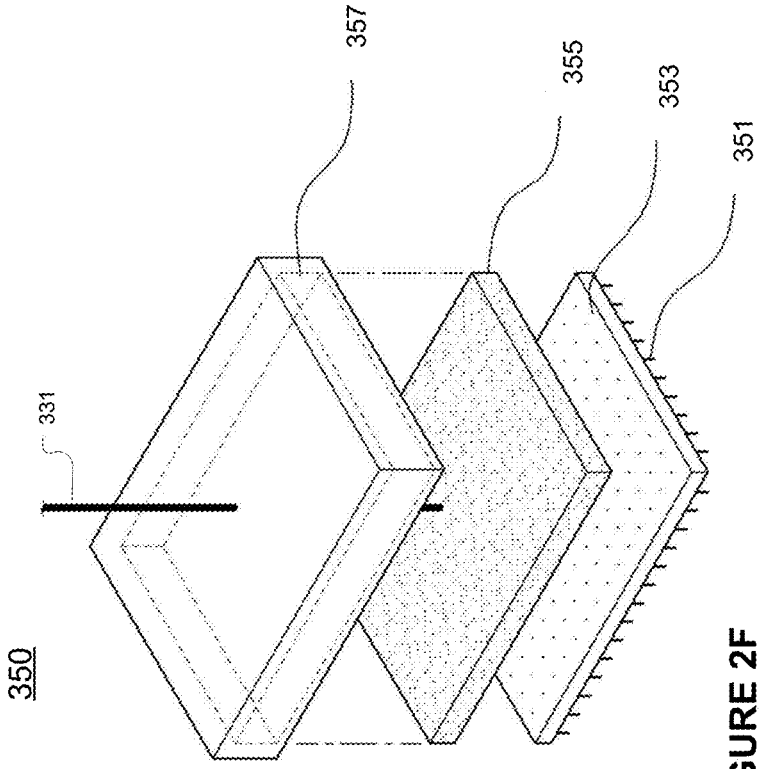

FIGURE 2F

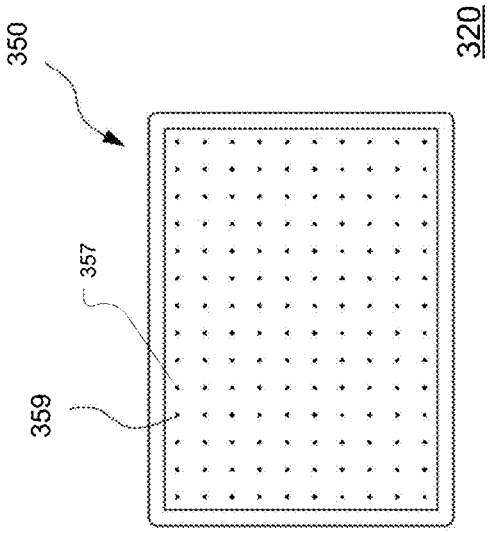

FIGURE 2E

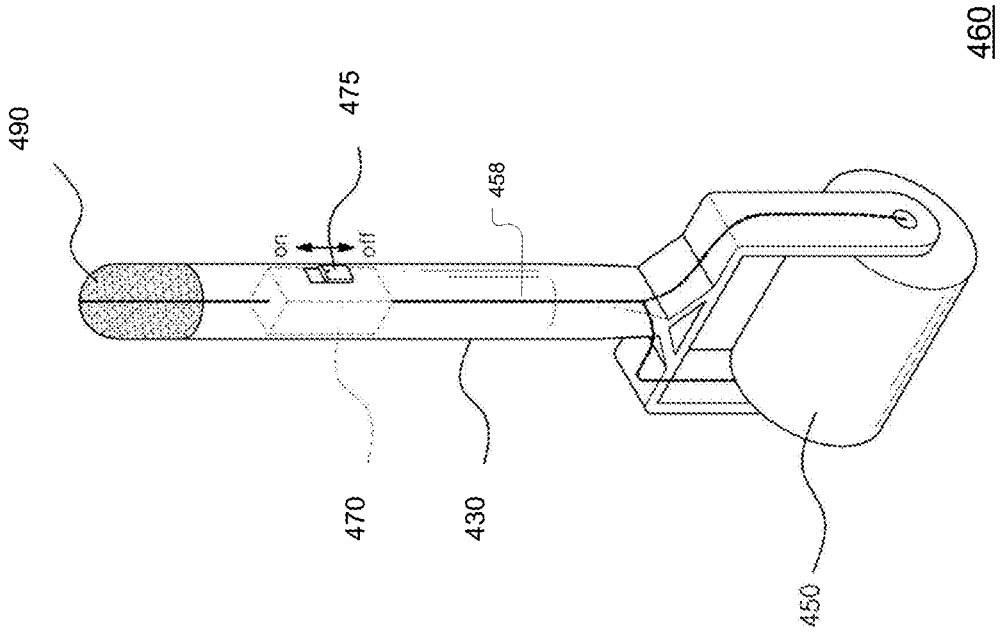

FIGURE 3B

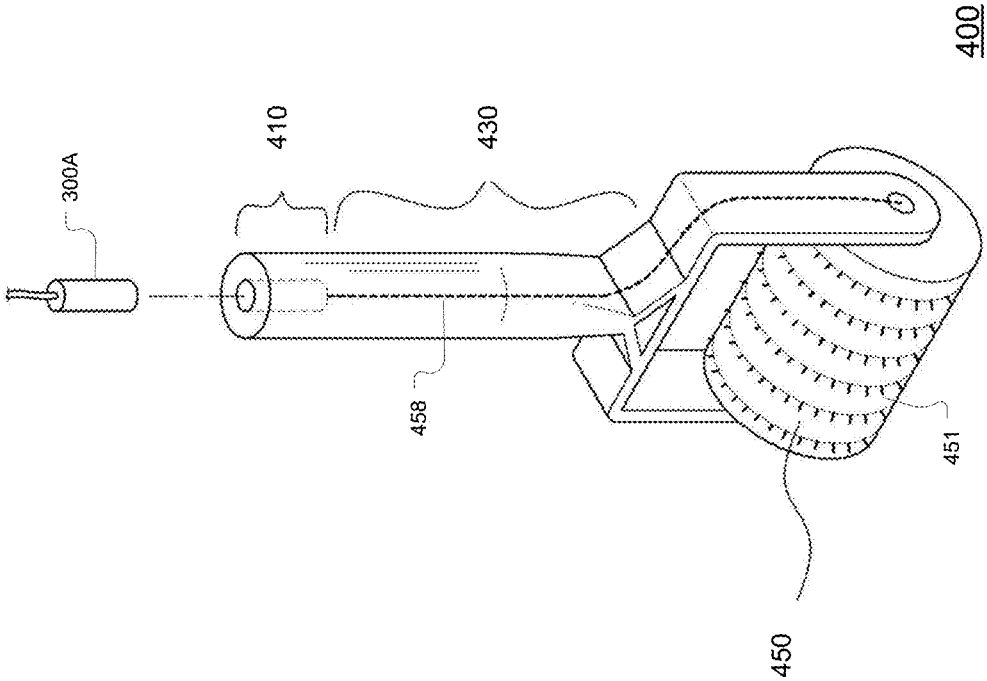

FIGURE 3A

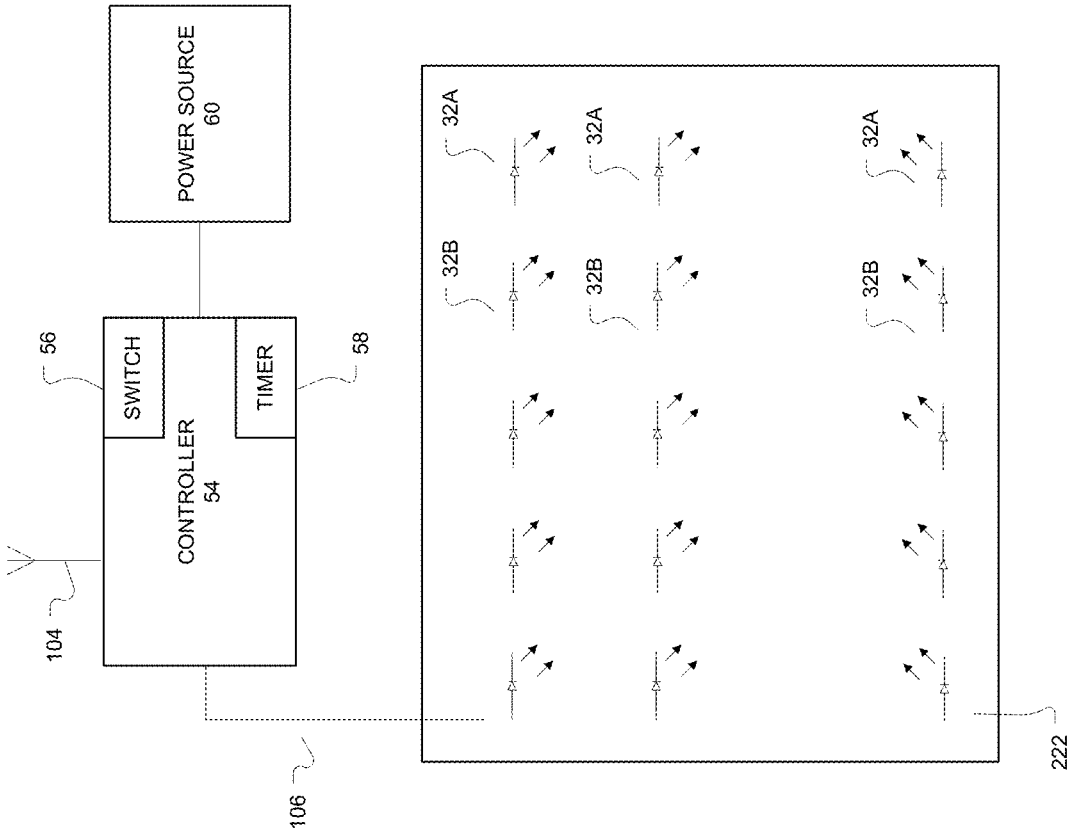

FIGURE 4B

510

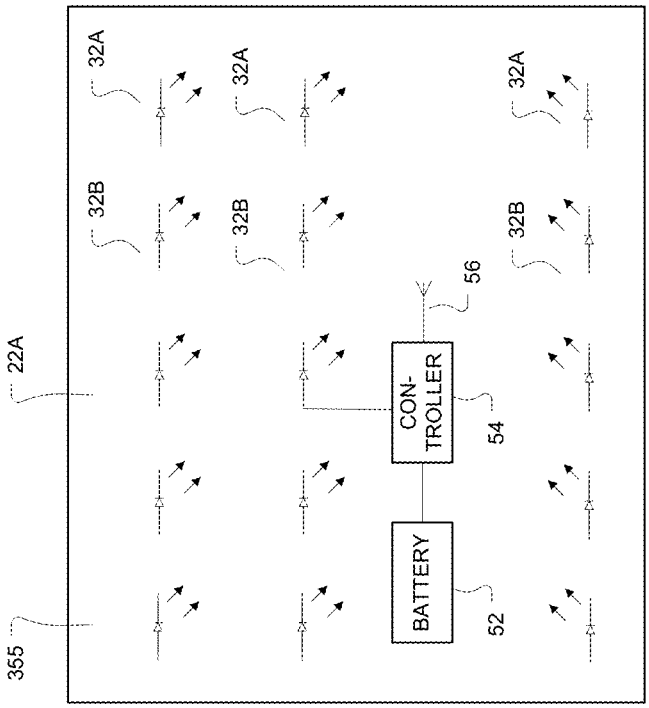

FIGURE 4A

520

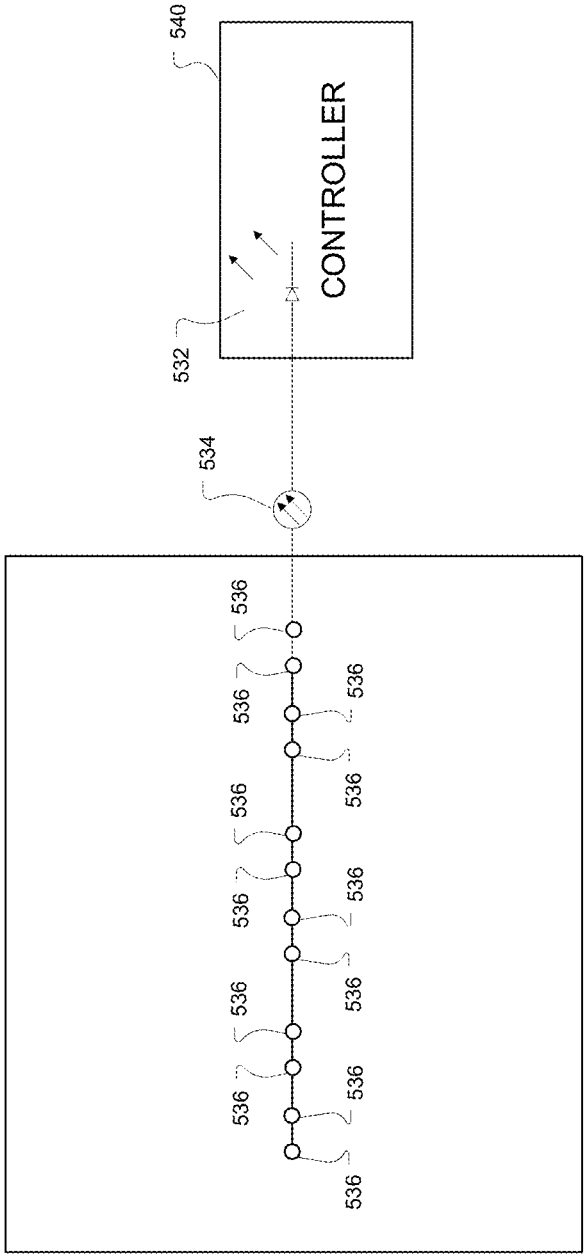
540
CONTROLLER
532
534
536
536
536
536
536
536
536
536
536
536
536
530

FIGURE 4C

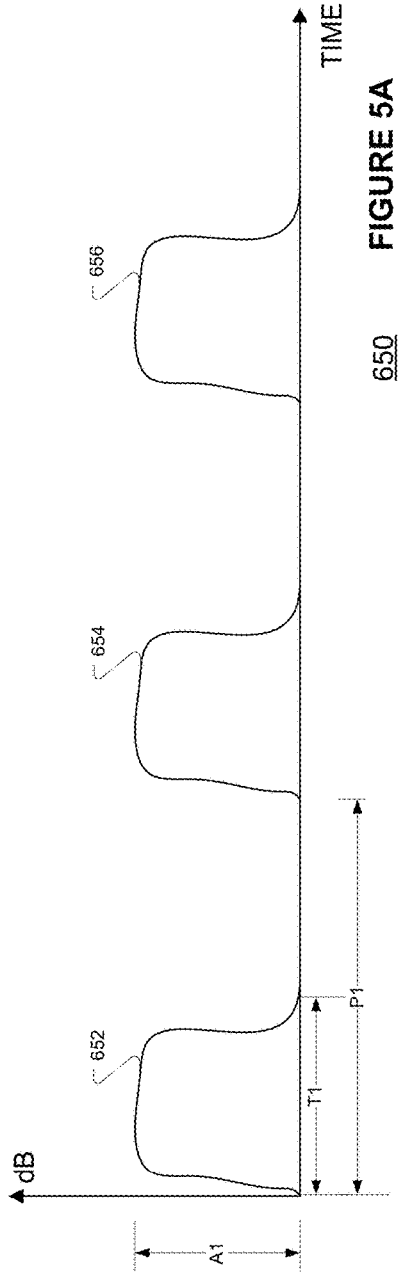

650 FIGURE 5A

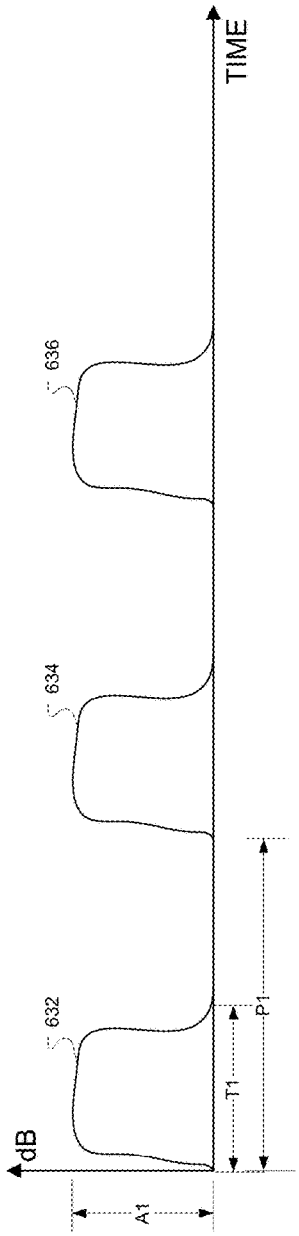

630

FIGURE 5B

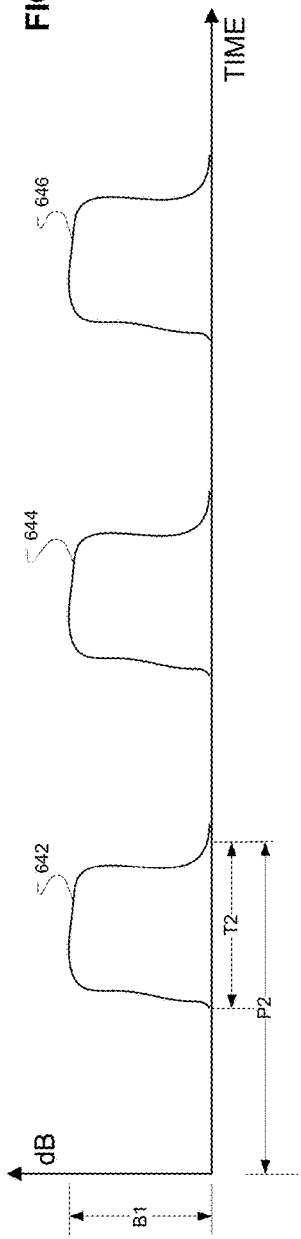

640

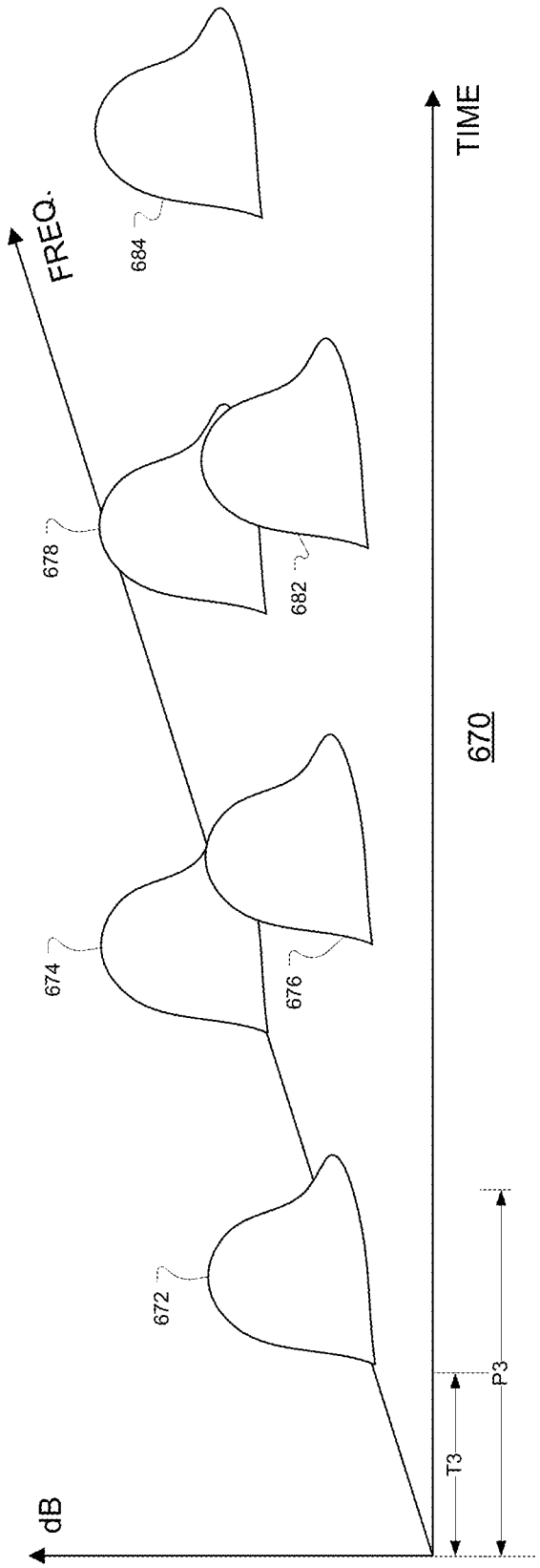

FIGURE 6

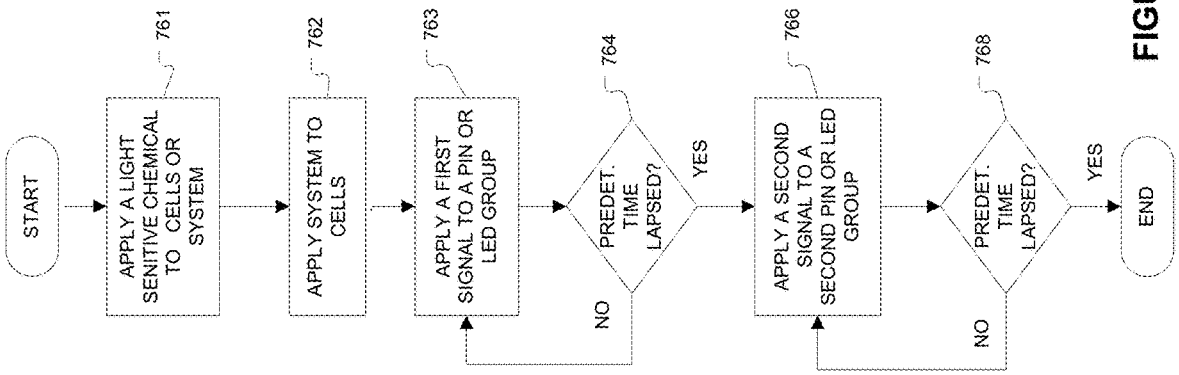

FIGURE 7C

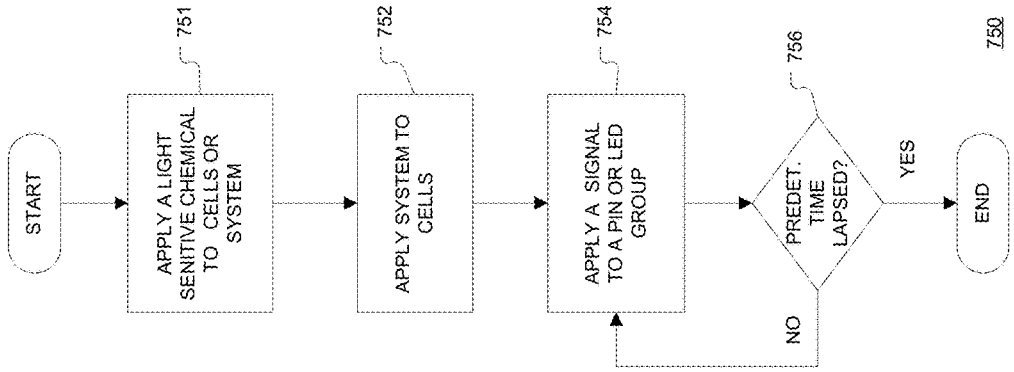

FIGURE 7B

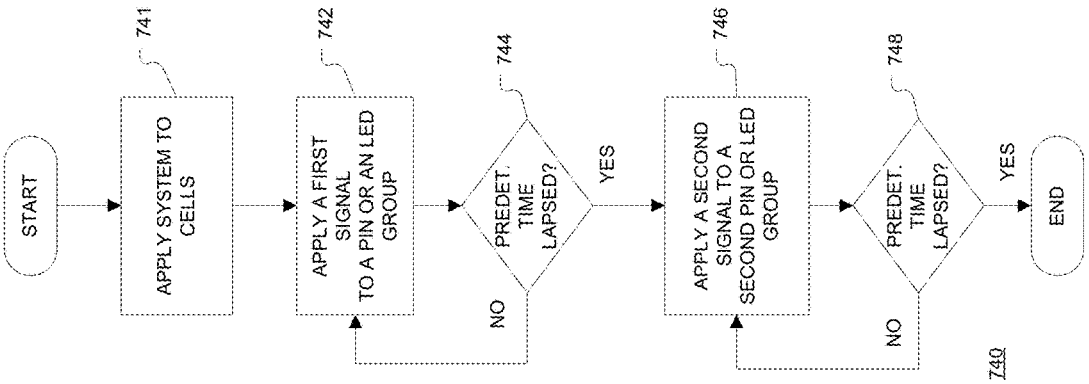

FIGURE 7A

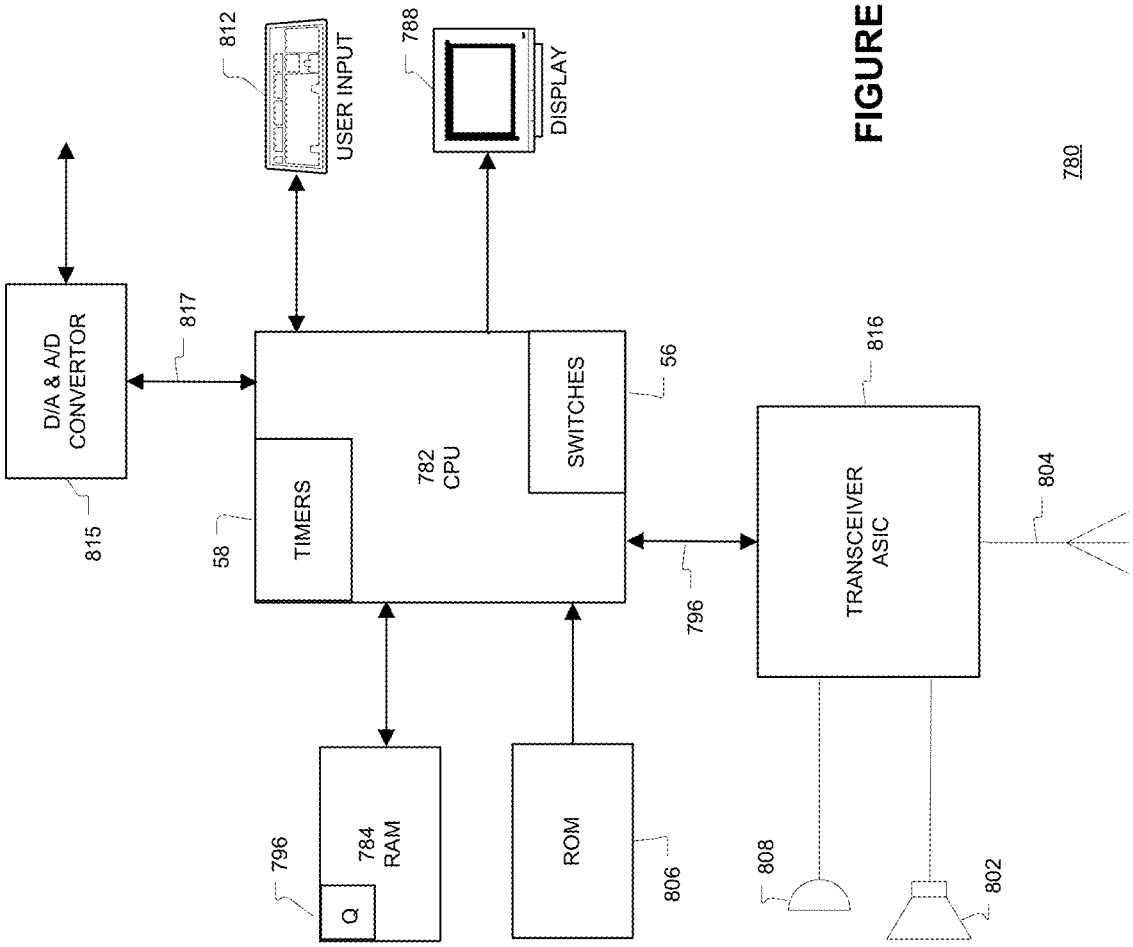
D/A & A/D CONVERTOR
815
817
812
USER INPUT
788
DISPLAY
58
TIMERS
782 CPU
SWITCHES
56
796
784 RAM
Q
ROM
806
816
TRANSCEIVER ASIC
804
808
802
780

FIGURE 8

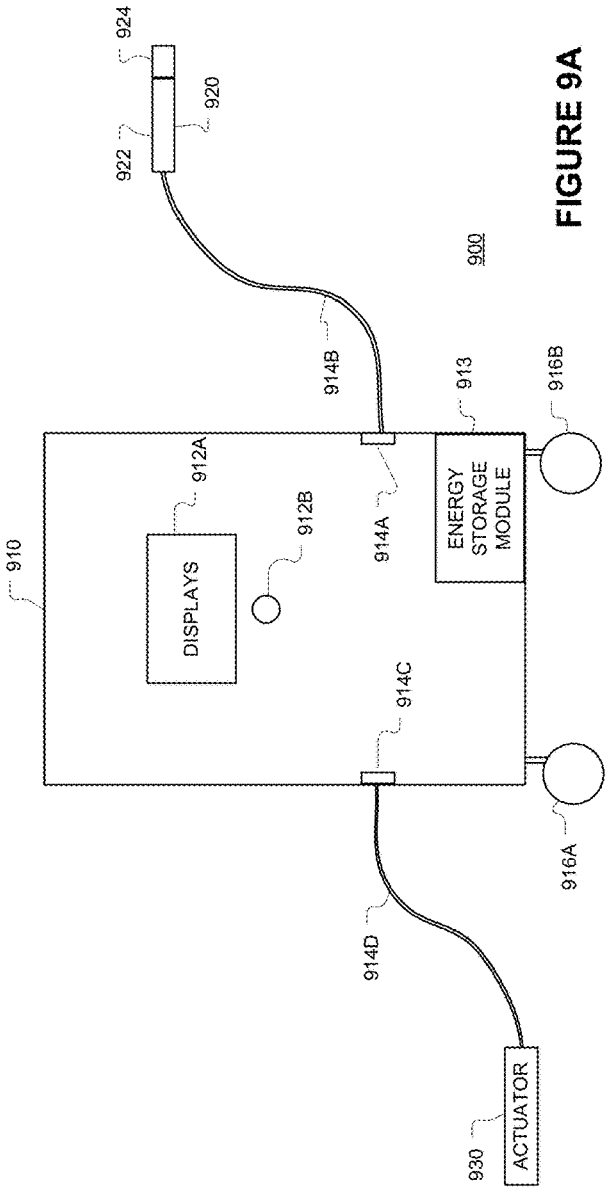

FIGURE 9A

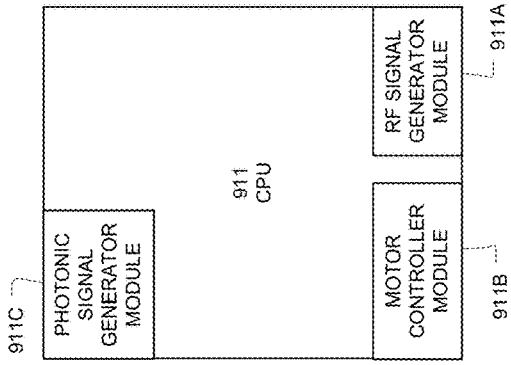

FIGURE 9B

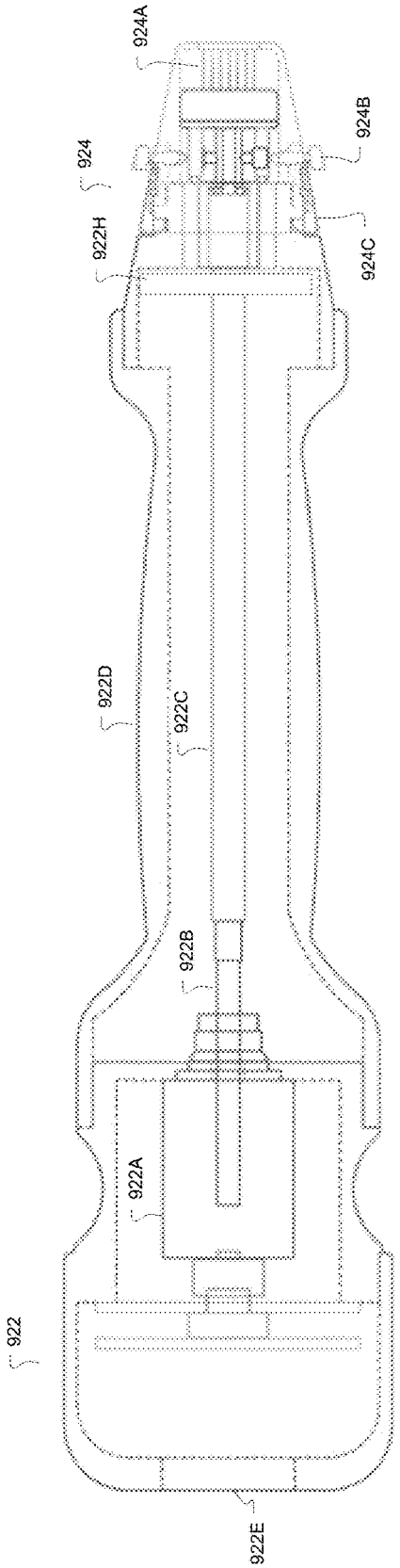

FIGURE 9C

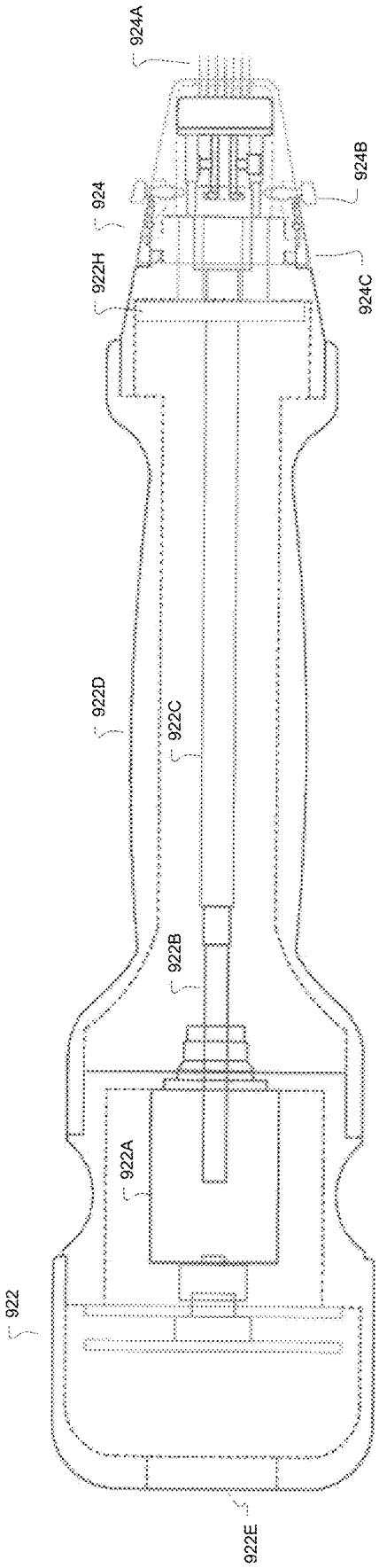

FIGURE 9D

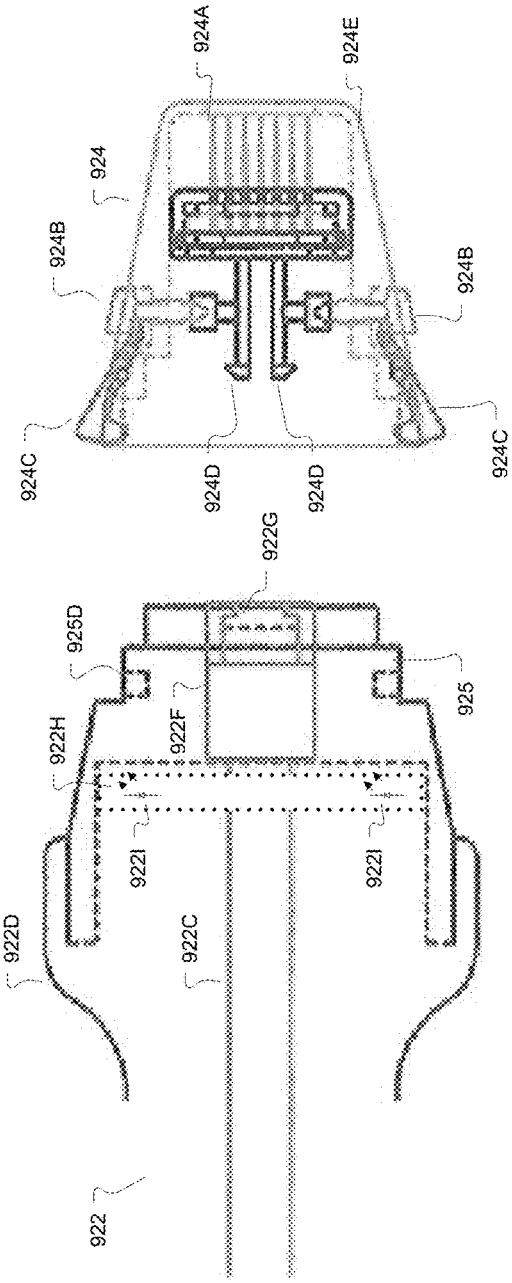

FIGURE 10A

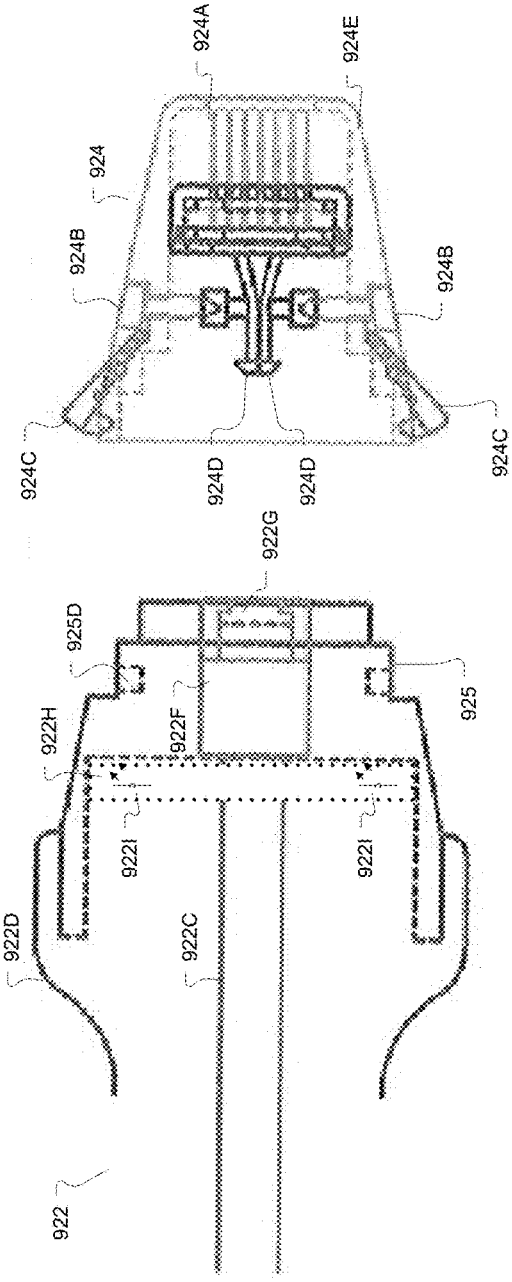

FIGURE 10B

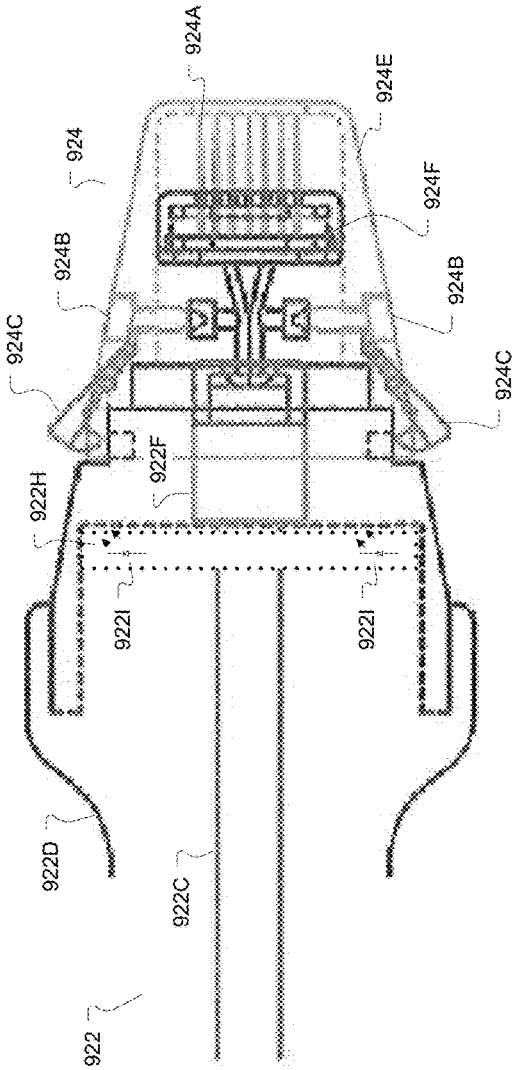

FIGURE 10C

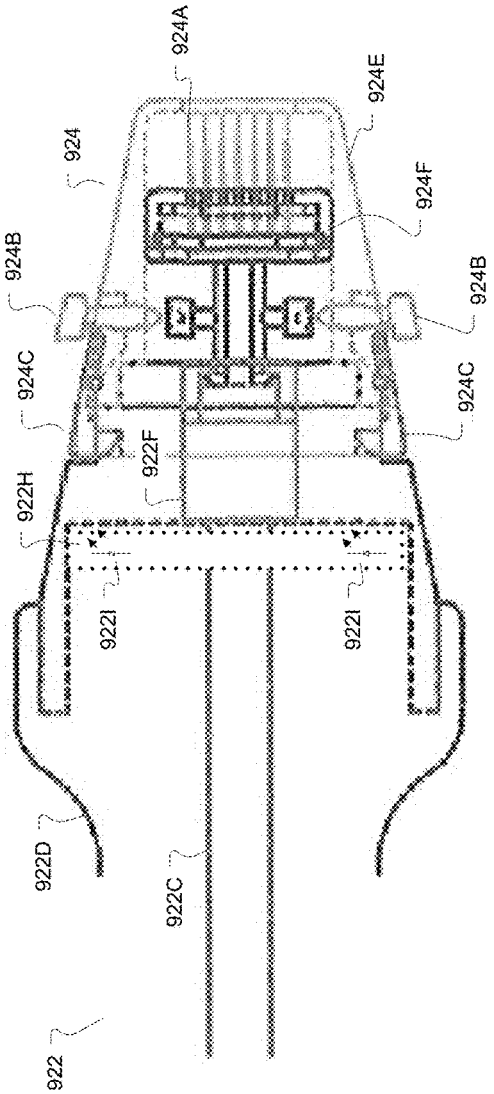

FIGURE 10D

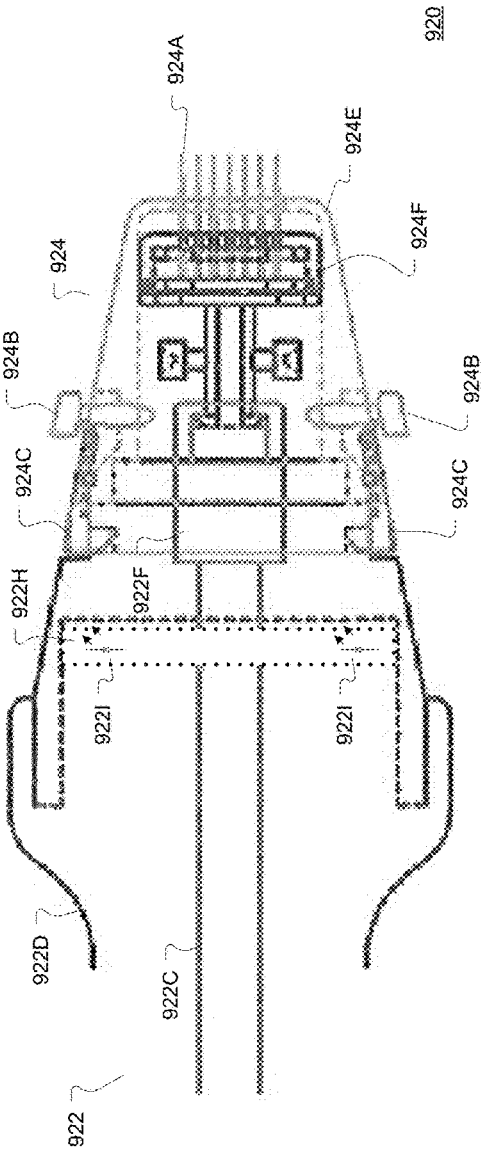

FIGURE 10E

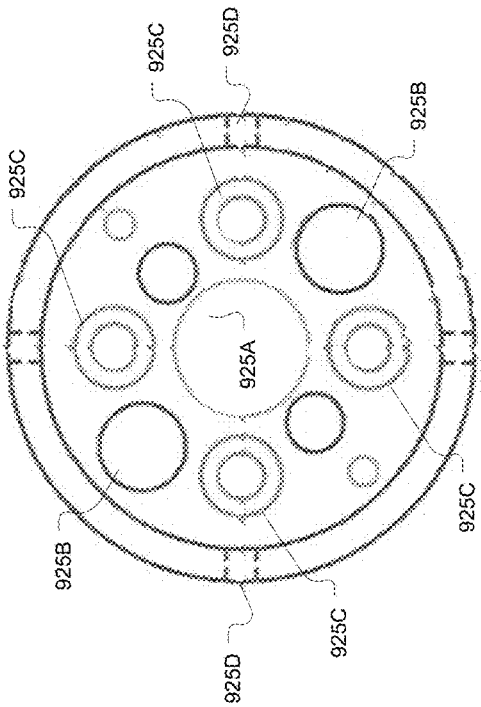

FIGURE 10F

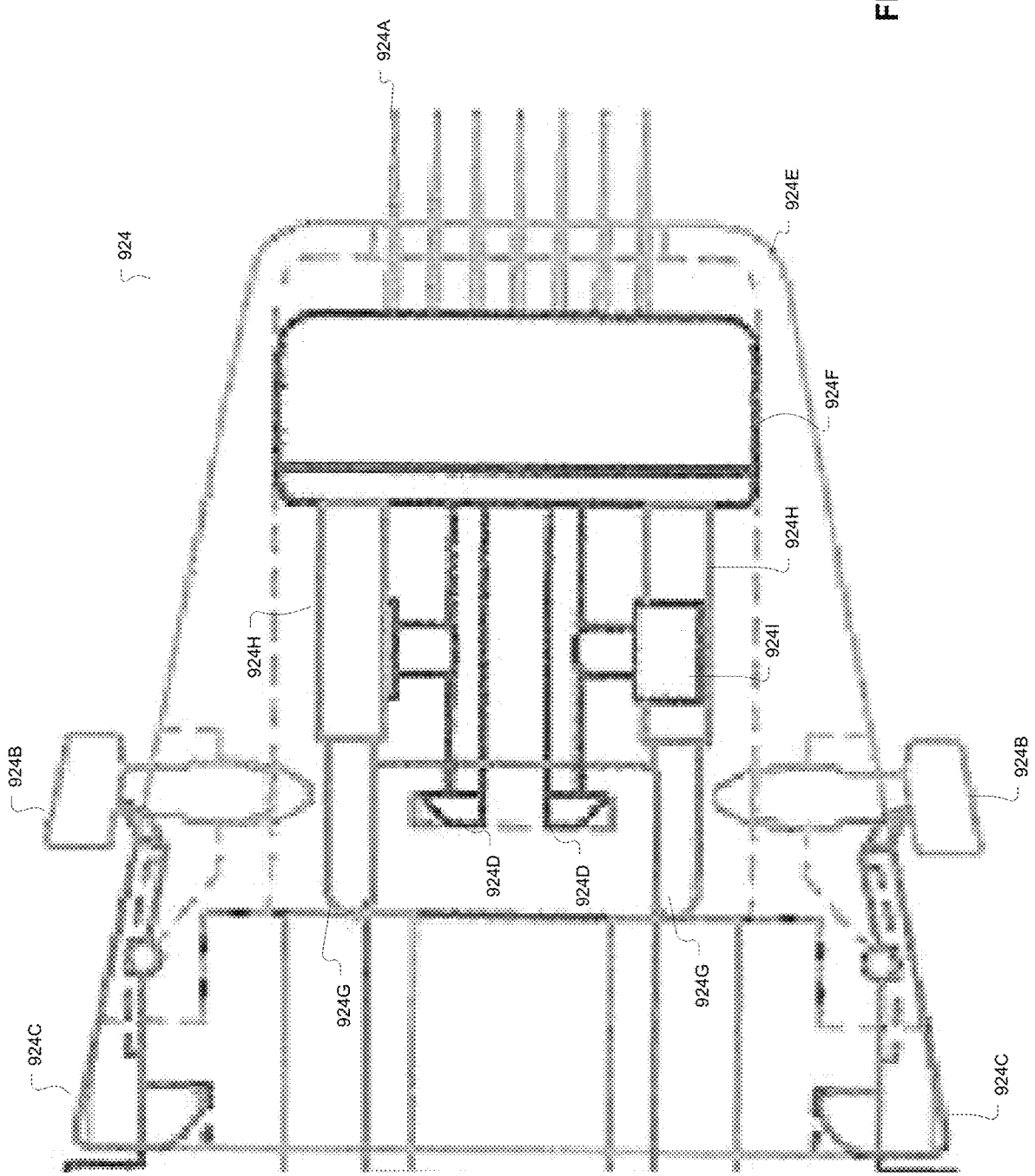
924
924A
924E
924F
924H
924H
924I
924B
924B
924D
924D
924G
924G
924C
924C

FIGURE 11A

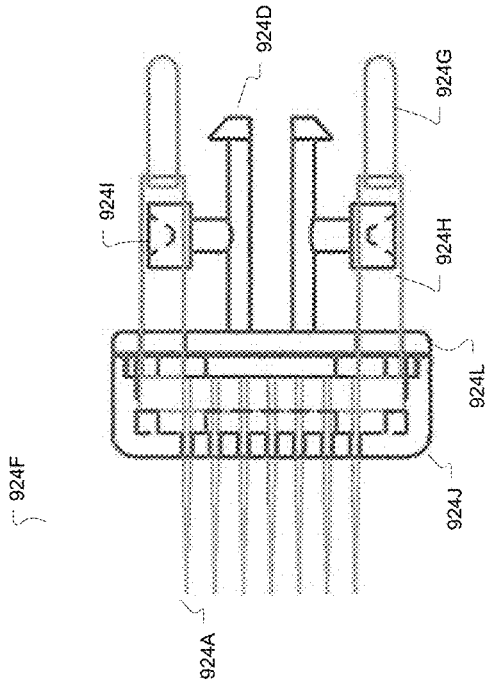

FIGURE 11B

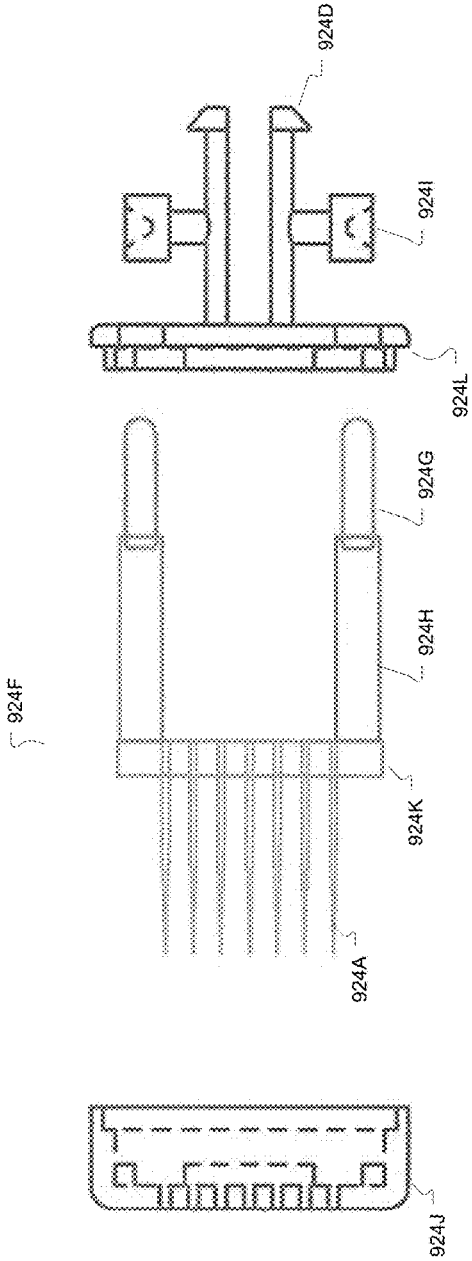

FIGURE 11C

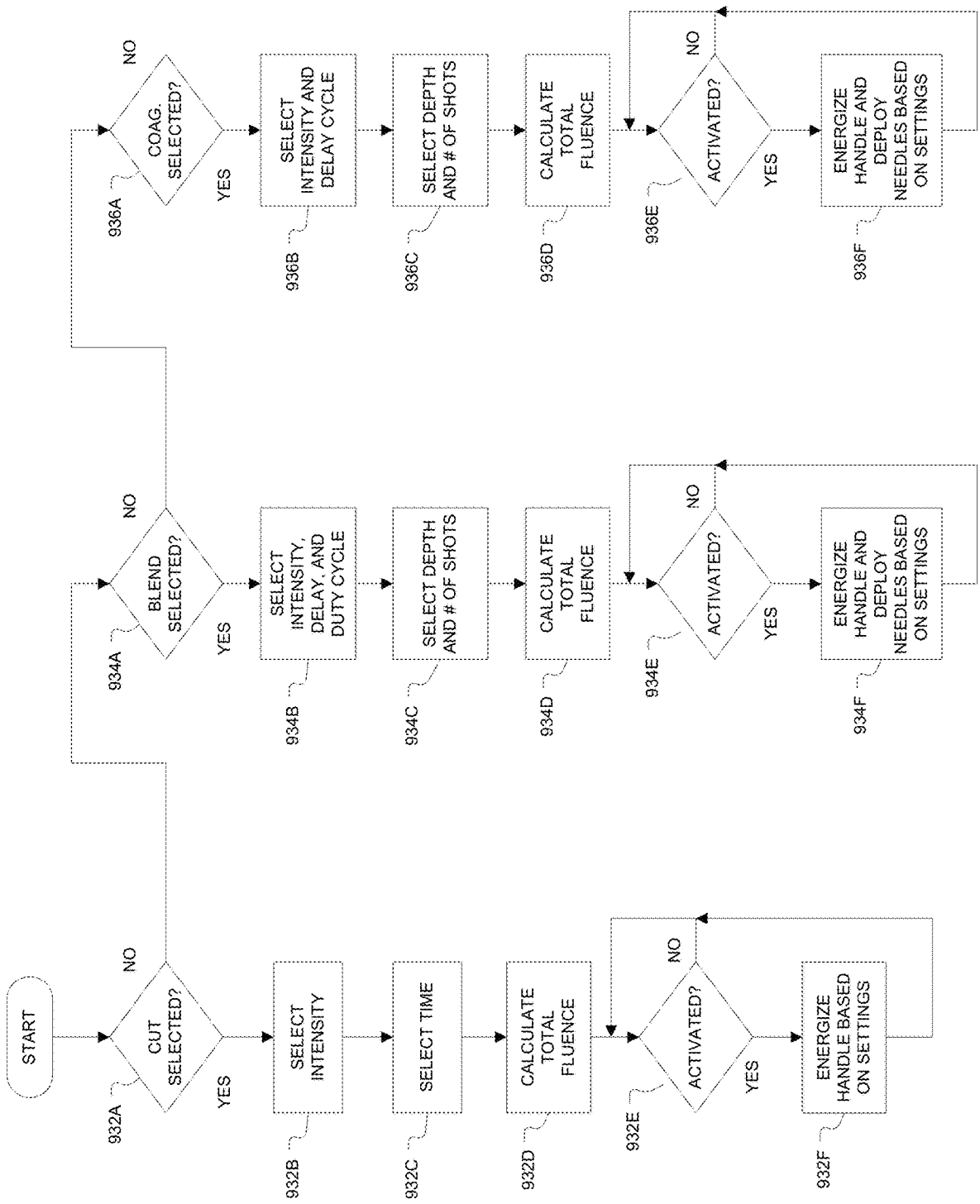
930
START
CUT SELECTED?
932A
YES
NO
SELECT INTENSITY
932B
SELECT TIME
932C
CALCULATE TOTAL FLUENCE
932D
ACTIVATED?
932E
YES
NO
ENERGIZE HANDLE BASED ON SETTINGS
932F
BLEND SELECTED?
934A
YES
NO
SELECT INTENSITY, DELAY, AND DUTY CYCLE
934B
SELECT DEPTH AND # OF SHOTS
934C
CALCULATE TOTAL FLUENCE
934D
ACTIVATED?
934E
YES
NO
ENERGIZE HANDLE AND DEPLOY NEEDLES BASED ON SETTINGS
934F
COAG. SELECTED?
936A
YES
NO
SELECT INTENSITY AND DELAY CYCLE
936B
SELECT DEPTH AND # OF SHOTS
936C
CALCULATE TOTAL FLUENCE
936D
ACTIVATED?
936E
YES
NO
ENERGIZE HANDLE AND DEPLOY NEEDLES BASED ON SETTINGS
936F

FIGURE 12

METHOD, SYSTEM, AND APPARATUS FOR DERMATOLOGICAL TREATMENT

CROSS REFERENCE TO RELATED APPLICATIONS

The present application is a continuation of U.S. application Ser. No. 15/096,686, entitled "METHOD, SYSTEM, AND APPARATUS FOR DERMATOLOGICAL TREATMENT", filed on Apr. 12, 2016, which is a continuation of U.S. application Ser. No. 13/825,083, entitled "METHOD, SYSTEM, AND APPARATUS FOR DERMATOLOGICAL TREATMENT", filed on Jan. 20, 2014 now U.S. Pat. No. 9,320,536, which is a National Stage entry of PCT/KR2012/001335, filed on Feb. 22, 2012, which claims priority to U.S. Application No. 61/449,080, entitled "METHOD, SYSTEM, AND APPARATUS FOR DERMATOLOGICAL TREATMENT", filed on Mar. 3, 2011 and U.S. application Ser. No. 13/060,274, U.S. Pat. No. 8,979,912, entitled "METHOD, SYSTEM, AND APPARATUS FOR DERMATOLOGICAL TREATMENT", filed on Feb. 22, 2011, which is a National Stage entry of PCT Application Number PCT/US2008/074131, entitled "METHOD, SYSTEM, AND APPARATUS FOR DERMATOLOGICAL TREATMENT", filed on Aug. 22, 2008, which claims priority to Republic of Korea Application Number 10-2008-0076993, entitled "Electrical system, skin, skin care and cosmetic electricity," filed on Aug. 6, 2008, the entirety of each is incorporated by reference.

TECHNICAL FIELD

Various embodiments described herein relate generally to treating dermatological tissue, including systems, and methods used in treating dermatological tissue.

BACKGROUND INFORMATION

It may be desirable to treat dermatological tissue; the present invention provides such treatment.

BRIEF DESCRIPTION OF THE DRAWINGS

FIG. **1**A is a simplified isometric diagram of a dermatological treatment apparatus according to various embodiments.

FIG. **1**B is a simplified, side diagram of the dermatological treatment apparatus according to various embodiments.

FIG. **1**C is a simplified, exploded layer view of the dermatological treatment apparatus according to various embodiments.

FIG. **1**D is a simplified view of a layer of a dermatological treatment apparatus according to various embodiments.

FIG. **2**A is a simplified isometric diagram of a dermatological treatment architecture according to various embodiments.

FIG. **2**B is a simplified cross-sectional diagram of a dermatological treatment apparatus according to various embodiments.

FIG. **2**C is a simplified cross-sectional diagram of another dermatological treatment apparatus according to various embodiments.

FIG. **2**D is a simplified cross-sectional diagram of another dermatological treatment apparatus according to various embodiments.

FIG. **2**E is a simplified view of a layer of a dermatological treatment apparatus according to various embodiments.

FIG. **2**F is a simplified, exploded view of layers of the dermatological treatment apparatus according to various embodiments.

FIG. **3**A is a simplified isometric diagram of a dermatological treatment apparatus according to various embodiments.

FIG. **3**B is a simplified isometric diagram of another dermatological treatment apparatus according to various embodiments.

FIG. **4**A is a simplified view of a layer of a dermatological treatment apparatus according to various embodiments.

FIG. **4**B is a simplified view of a layer and apparatus of a dermatological treatment system according to various embodiments.

FIG. **4**C is a simplified view of a layer and apparatus of a dermatological treatment system according to various embodiments.

FIGS. **5**A-**6** are diagrams of signals that may be applied to one or more dermatological treatment systems according to various embodiments.

FIG. **7**A-**7**C are flow diagrams illustrating dermatological treatment system processing algorithms according to various embodiments.

FIG. **8** is a block diagram of an article according to various embodiments.

FIG. **9**A is a simplified block diagram of a dermatological treatment architecture according to various embodiments.

FIG. **9**B is a block diagram of an article according to various embodiments that may be employed in architecture of FIG. **9**A.

FIG. **9**C is a simplified cross-sectional diagram of a cartridge based dermatological treatment apparatus with the needles retracted according to various embodiments.

FIG. **9**D is a simplified cross-sectional diagram of a cartridge based dermatological treatment apparatus with the needles deployed according to various embodiments.

FIG. **10**A-**10**D are simplified, partial, cross-sectional diagrams of a cartridge in various stages of attachment to a dermatological treatment apparatus according to various embodiments.

FIG. **10**E is a simplified, partial, cross-sectional diagram of a dermatological treatment apparatus with needles deployed according to various embodiments.

FIG. **10**F is a simplified cross-sectional diagram of a cartridge based dermatological treatment apparatus cartridge interface according to various embodiments.

FIG. **11**A is a simplified, partial, cross-sectional diagram of a dermatological treatment apparatus cartridge coupled to a handle with needles deployed according to various embodiments.

FIG. **11**B is a simplified, cross-sectional diagram of a cartridge needle assembly according to various embodiments.

FIG. **11**C is a simplified, cross-sectional, exploded diagram of a cartridge needle assembly according to various embodiments.

FIG. **12** is a flow diagram illustrating a dermatological treatment system processing algorithms according to various embodiments.

DETAILED DESCRIPTION

FIG. **1**A is a simplified isometric diagram and FIG. **1**B is a simplified side view of a dermatological treatment apparatus **10** according to various embodiments. The apparatus **10** may include a user handle **220** coupled to an acupuncture plate **200**. In an embodiment the plate **200** may be elastically

coupled to the handle segment **222** via an elastomeric section **210**. The elastomeric section may be comprised of a combination of elastomeric materials and non-elastomeric materials. The elastomeric materials may include plastics, rubber (synthetic or natural), and spring(s).

FIG. **1**C includes a simplified exploded view of an embodiment of an acupuncture plate **200** according to various embodiments. The plate **200** may include an upper, substantially rigid section or layer **290**, deformable or elastic section **270** or layer, and acupuncture section or layer **250**. The acupuncture section **250** may include a plurality of acupuncture pins or needles **230**. FIG. **1**D is a simplified bottom view of the plate **200** showing the location or holes **212** for the pins or needles **230**. In an embodiment the plate **200** may have a rectangular cross section having a dimensional about 1 to 4 cm in width and about 1 to 6 cm in length. The plate **200** may any shape including circular, elliptical, polygon, or other shape where the shape may be particular to a dermatological area to be treated.

In an embodiment the plate may include about 140 pins or needles **230** uniformly separated. Each needle may be about 0.1 to 0.4 mm in diameter and 0.2 mm to 1.4 mm in length including 0.3 mm diameter and 0.8 mm in length in an embodiment. The elastic section or layer **270** may be comprised of a combination of elastomeric materials and non-elastomeric materials. The elastomeric materials may include plastics, rubber (synthetic or natural), and spring(s). The pin section **250** may be coupled directly or indirectly to the upper section **290** via the elastic section **270**, including via glues, screws, welds, or other connection. In an embodiment the pin section **250** may include elastomers to enable at least partial deformation of the pin section **250** about the pins **230**.

In operation a user may employ the apparatus **10** to create a plurality of micro-wounds or holes in dermatological layers of a mammal's **20** skin or dermis. The micro-wound or hole creation may improve the absorption or application of one or more chemicals applied on or about the micro-wounds or holes.

FIG. **2**A is a simplified diagram of a dermatological treatment architecture **310** according to various embodiments. Architecture **310** includes an acupuncture apparatus **320** and an electrical signal generation system **300**. The electrical signal generation system **300** may be electrically coupled to the acupuncture apparatus **320** via one or more wires **300**A and to a mammal **20** to be treated via one or more wires **300**B. FIG. **2**B is a simplified cross-sectional diagram of the acupuncture apparatus **320** according to various embodiments. The apparatus **320** may include a handle **330**, elastic section **333**, electrical interface **340**, internal wire(s) **331** and plate **350**. The pins **351** may have a length A (0.3 mm to 2.1 mm in an embodiment) where at least one pin **351** is electrically coupled to the electrical interface **340** via the internal wire **331**. The electrical interface **340** may be removably connected to the system **300** wire **300**A.

The electrical signal generation system **300** may generate a variety of signals (such as shown in FIGS. **5**A to **6**) to vibrate one or more pins **351** electrically coupled to the system **300** via the internal wire **331** and lead **300**A. A pin vibration **351** may increase the micro-wound or cut formed in dermis by the pin **351**. FIG. **2**C is a simplified cross-sectional diagram of an acupuncture apparatus **360** according to various embodiments. The apparatus **360** may include a handle **330**, an elastic section **333**, an electrical conductive interface **390**, internal wire(s) **331**, signal generator **370**, switch **375**, and plate **350**. The signal generator **370** may be coupled to at least one pin **351** via internal wire **331** and coupled to the conductive interface **390**.

The signal generator or module **370** may generate a variety of signals (such as shown in FIGS. **5**A to **6**) to vibrate one or more pins **351** electrically coupled to the system **300** via the internal wire **331** and the conductive interface **390**. In operation a user **20** may touch the conductive interface **390** and place one or more electrically coupled pins **351** in contact with their dermis to form an electrical pathway from the pin **351** to the electrical conductive interface **390**. The signal generator **370** may include a battery to supply energy to generate one or more electrical signals. The switch **375** coupled to the generator **370** may cause the generator to produce one or more electrical signals for a predetermined time interval or until the switch **375** is triggered again. As noted a pin vibration **351** may increase the micro-wound or cut formed in dermis by the pin **351**.

FIG. **2**D is a simplified cross-sectional diagram of an acupuncture apparatus **362** according to various embodiments. The apparatus **362** may include a handle **330**, an elastic section **333**, internal wire(s) **331**, **332**, signal generator **370**, switch **375**, and plate **350**. The signal generator **370** may be coupled to at least one pin **351** via internal wire **331** and coupled to at least one other pin **352** via internal wire **332**. When active the pins **351**, **352** may form at least one dipole pair. The signal generator or module **370** may generate a variety of signals (such as shown in FIGS. **5**A to **6**) to vibrate one or more dipole pair or bipolar pins **351**, **352**.

FIG. **2**F includes a simplified exploded view of an embodiment of an acupuncture plate **350** including at least one electrically coupled pin **351** according to various embodiments. The plate **350** may include an upper, substantially rigid section or layer **357**, deformable or elastic section **355** or layer, and acupuncture section or layer **353**. The acupuncture section **353** may include a plurality of acupuncture pins or needles **351** where at least one pin **351** is electrically coupled to the wire **331**. In a bipolar configuration a second wire **332** may be coupled to at least one other pin **351**. FIG. **2**E is a simplified bottom view of the plate **350** showing the pins or needles **359**, **357** where the pins may be electrically coupled to a first wire **331** and a second wire **332** to form dipole pair (bipolar pins).

In an embodiment the plate **350** may have a rectangular cross section having a dimensional about 1 to 4 cm in width and about 1 to 6 cm in length. The plate **350** may any shape including circular, elliptical, polygon, or other shape where the shape may be particular to a dermatological area to be treated.

In an embodiment the plate may include about 140 pins or needles **351** uniformly separated. Each needle may be about 0.1 to 0.4 mm in diameter and 0.2 mm to 1.4 mm in length including 0.3 mm diameter and 0.8 mm in length in an embodiment. The elastic section or layer **355** may be comprised of a combination of elastomeric materials and non-elastomeric materials. The elastomeric materials may include plastics, rubber (synthetic or natural), and spring(s). The pin section **353** may be coupled directly or indirectly to the upper section **357** via the elastic section **355**, including via glues, screws, welds, or other connection. In an embodiment the pin section **353** may include elastomers to enable at least partial deformation of the pin section **353** about the pins **351**.

FIGS. **3**A and **3**B are simplified isometric diagrams of acupuncture apparatus **400**, **460** including at least one pin **451** that may be coupled to an electrical signal via an internal wire **458**. Each apparatus **400**, **460** includes curved roller **450** having a plurality of acupuncture pins **451** where

the pins **451** may be similar to pins **351**. In apparatus **400**, the electrical lead wire **300**A may be coupled to an electrical interface **410** in the apparatus handle **430** where the interface **410** is electrically coupled to the internal wire **458**. In apparatus **460**, the handle **430** may include a signal generator **470** similar to generator **370**, switch **475**, and conduction surface **490**. Apparatus **460** may operate similar to apparatus **360** in operation other than the rolling capability of the apparatus **460**, **400**. In an embodiment the rollers **450** may have various configurations to conform to a dermal area to be treated.

In any of the above apparatus **10**, **320**, **350**, **360**, **400**, **460**, the plate or roller **200**, **350**, **450** may include a plurality of embedded LEDs **32**A, **32**B, a battery **52**, a controller **54**, and an antenna **56** as shown in FIG. **4**A. In an embodiment the LED **32**A may be configured to emit energy of a first particular frequency range and the LED **32**B may be configured to emit energy of a second particular frequency range. The surface **22** of a roller **450**, plate **200**, **350**, **450** may also be embedded with a chemical **22**A that may be used to treat dermatological cells. The chemical **22**A may be reactive to the first and the second frequency ranges. Further dermatological cells may be reactive to the first and the second frequency ranges. In addition, the combination of the chemical **22**A and the application of the first and the second frequency ranges to the chemical **22**A and dermatological cells may have a synergetic effect.

In an embodiment the chemical **22**A may be applied directly to the dermatological cells to be treated. In a further embodiment a chemical **22**A may not be employed in addition to the apparatus **10**, **320**, **350**, **360**, **400**, **460**. In an embodiment the pin section **250**, **353**, may be translucent and comprised of polyurethane, medical silicon, or other pliable, translucent, hypoallergenic material.

In an embodiment the local controller **54** and battery **52** may also be embedded in the upper section **290**, **357**, pin section **230**, **351**, or the handle **220**, **330**, or separately between these sections. The controller **54** may be electrically coupled to the one or more LEDs **32**A, **32**B. The controller **54** may also be coupled to a battery **52**. The controller **54** may generate one or more signals for LEDs **32**A, **32**B as a function of a user switch **75**, **56**. The signals may vary as a function of the first and second frequency ranges. The controller **54** may include one or more timers **58** that may limit the application of energy to the LEDs **32**A, **32**B to predetermined time intervals. In an embodiment the controller may also be coupled to an antenna **56** to receive or transmit one or more signals related to the transmission of energy to one or more LEDs **32**A, **32**B. In an embodiment the system **10** may be configured to treat a particular segment of dermatological cells such as a face. The apparatus **10** may be configured to conform to a user's anatomy so that emitted light is focused on dermatological cells. In another embodiment **200**, the system **200** may be configured to treat another anatomical region including dermatological cells on an arm, leg, chest, hands, feet, neck, or other region.

In an embodiment **510** shown in FIG. **4**B, a controller **54**, an antenna **104**, and a power source **60** may be located external to the apparatus **10**, **320**, **360**. The power source **60** may be coupled to the controller **54**. The controller **54** may be coupled to one or more LEDs **32**A, **32**B via one or more electric wires **106**. The controller **54** may generate one or more signals for LEDs **32**A, **32**B as a function of the user switch **56**. The signals may vary as a function of the first and second frequency ranges. The controller **54** may include one or more timers **58** that may limit the application of energy to the LEDs **32**A, **32**B to predetermined time intervals. In an embodiment the controller may also be coupled to an antenna **104** to receive or transmit one or more signals related to the transmission of energy to one or more LEDs **32**A, **32**B.

As shown in FIG. **4**C, in any of the above apparatus **10**, **320**, **350**, **360**, **400**, **460**, the plate or roller **200**, **350**, **450** may include a plurality of embedded LED lens **536**, a fiber optic pathway **534**, and an LED **532**. In this embodiment, system **530** LED **532** shown in FIG. **4**C may be coupled to lens **536** via the fiber optic pathway **534**. The controller **540** may generate an LED signal via the LED **532** that is transmitted to dermatological cells via the lens **536** and the fiber optic pathway **534**.

FIGS. **5**A-**5**B are diagrams of electrical signal waveforms **650**, **630**, **640** that may be applied to one or more LEDs **32**A, **32**B, **532** and to the pins **230**, **351**, **451** according to various embodiments. The signal waveform **650** includes several square-wave pulses **652**, **654**, **656** that may be applied to an LED **32**A, **32**B, **532**. Each pulse **652**, **654**, **656** may a have a similar magnitude and envelope. The waveform **650** may be used to energize an LED **32**A, **32**B, **532** and to the pins **230**, **351**, **451** periodically P**1** for a predetermined interval T**1** where each pulse **652**, **654**, **656** has a amplitude A**1**. In an embodiment, A**1** may be about 0.1 milliamperes (mA) to 10 mA, the pulse width T**1** may be about 100 microseconds (μs) to 500 μs and the period P**1** may from 100 ms to 500 ms as a function of the energy required to create capacitance in a liquid. In another embodiment, A**1** may be about 0.5 milliamperes (mA) to 5 mA, the pulse width T**1** may be about 200 microsecond (μs) and the period P**1** may about 250 ms as a function of the energy to drive an LED or cause one or more pins **230**, **351**, **451** to vibrate.

In FIG. **5**B a signal waveform **630** may be applied to a first LED **32**A, **32**B, **532** module or group and to the pins **230**, **351**, **451** and a second waveform **640** may be applied or used to energize a second LED **32**A, **32**B, **532** module and the pins **230**, **351**, **451**, **352**. The signal waveform **630** includes several square-wave pulses **632**, **634**, and **636** and the signal waveform **640** includes several square-wave pulses **642**, **644**, and **646**. Each pulse **632**, **634**, **636**, **642**, **644**, **646** may a have a similar magnitude and envelope. The waveform **630** may be used to energize a first LED **32**A, **32**B, **332** module and the pins **230**, **351**, **451** periodically P**1** for a predetermined interval T**1** where each pulse **632**, **634**, **636** has an amplitude A**1**. The waveform **640** may be used to energize a second LED **32**A, **32**B, **332** module and the pins **230**, **351**, **451** periodically P**2** for a predetermined interval T**2** where each pulse **642**, **644**, **646** has an amplitude B**1**. The pulse width T**1**, T**2** may be about 100 microseconds (μs) to 500 μs and the period P**1**, P**2** may from 100 ms to 500 ms as a function of the energy to affect dermatological cells or chemicals **22**A. In another embodiment, A**1**, A**2** may be about 0.5 milliamperes (mA) to 5 mA, the pulse width T**1**, T**2** may be about 200 microsecond (μs) and the period P**1**, P**2** may about 250 ms as a function of the energy required to affect dermatological cells or chemicals **22**A. In an embodiment the pulses **632**, **634**, **636** do not substantially overlap the pulses **642**, **644**, **646**. In an embodiment T**1**>T**2** and P**2** is an integer multiple of P**1**.

FIG. **6** depicts a waveform **670** that includes multiple pulses **672**, **674**, **676**, **678**, **682**, and **684** that may not overlap in the time or the frequency domain. In an embodiment each pulse **672**, **674**, **676**, **678**, **682**, and **684** may have a pulse width T**3**, and frequency spectrum width F**1** and period P**3**. The pulse **672** is frequency offset from the pulse **674**, the pulse **676** is frequency offset from the pulse **678**, and the pulse **682** is frequency offset from the pulse **684**. The pulses

672, 674, 676, 678, 682, and 684 may be applied to an LED module to affect dermatological cells or chemicals 22A and the pins 230, 351, 451. Pulses 672, 674 having different frequency spectrums may enable different LED stimulation. In an embodiment the pulses 672, 676, 682 may be applied to a first LED module and the pulses 674, 678, 684 may be applied to a second LED module. The frequency separation between the respective pulses may enable simultaneous energization of a first and a second LED module and the pins 230, 351, 451 and subsequent and independent spectrum generation.

In an embodiment the invention may employ the algorithm 740 shown in FIG. 7A to apply therapy to dermatological cells. A user, clinician, or equipment may place an apparatus 10, 320, 360, 360, 400, 460 on dermatological cells to be treated (activity 741) including pressing the apparatus against the cells firmly enough to embed one or more pins 251, 351, 451 in the cells. A first signal such as shown in FIGS. 5A, 5B, and 6 may be applied to a first LED module or group (32A) and the pins 230, 351, 451 of a dermatological apparatus 10, 320, 360, 360, 400, 460 (activity 742) for a predetermined time period (activity 744). A second signal such as shown in FIGS. 5A, 5B, and 6 may be applied to a second LED module or group (32B) and the pins 230, 351, 451 of a dermatological apparatus 10, 320, 360, 360, 400, 460 (activity 746) for a predetermined time period (activity 748). The signals applied to the groups may be selected to stimulate dermatological cells or chemicals 22A or cause vibration of one or more pins 251, 351, 451.

In another embodiment the invention may employ the algorithm 750 shown in FIG. 7B to apply therapy to dermatological cells. A user, clinician, or equipment may apply a light sensitive chemical on an apparatus 10, 320, 360, 360, 400, 460 or on dermatological cells to be treated (activity 751). The user, clinician, or equipment may place apparatus 10, 320, 360, 360, 400, 460 on dermatological cells to be treated (activity 752). A signal such as shown in FIGS. 5A, 5B, and 6 may be applied to a LED module or group (32A or 32B) and the pins 230, 351, 451 (activity 354) for a predetermined time period (activity 356).

In another embodiment the invention may employ the algorithm 760 shown in FIG. 7C to apply therapy to dermatological cells. A user, clinician, or equipment may apply a light sensitive chemical on an apparatus 10, 320, 360, 360, 400, 460 or on dermatological cells to be treated (activity 761). The user, clinician, or equipment may place an apparatus 10, 320, 360, 360, 400, 460 on dermatological cells to be treated (activity 762). A first signal such as shown in FIGS. 5A, 5B, and 6 may be applied to a first LED module or group (32A) and one or more pins 251, 351, 451 of a dermatological apparatus 10, 320, 360, 360, 400, 460 (activity 763) for a predetermined time period (activity 764). A second signal such as shown in FIGS. 5A, 5B, and 6 may be applied to a second LED module or group (32B) and one or more pins 251, 351, 451 of a dermatological apparatus 10, 320, 360, 360, 400, 460 (activity 766) for a predetermined time period (activity 768).

The apparatus 10, 320, 360, 360, 400, 460 may be used to employ cosmetic or medications or other chemicals directly on dermatological cells such as skin with the addition of light of specific frequencies for treatment and healing of epidermal cells of the skin or tissue below the skin with the object of assisting the agents used in delivery, uptake, action and function more effectively. The LEDs 32A, 32B may create the specific frequencies of light. The apparatus 10, 320, 360, 360, 400, 460, light application may enable cosmetic or medication or other active chemicals 22A on dermatological cells for longer time periods while preventing dehydration of the applied substances. Such light application may improve the efficacy of cosmetic or medication or other active chemical as a function of the selected wavelengths or frequencies.

Further the dermatological system application may increase cellular activity and help heal tissue faster and facilitate the delivery, uptake and use in the cell of the cosmetics, medications, or chemicals 22A used. The LED light of specific frequencies may increase fibroblast production and collagen as well as other activities of the cell including stimulating the organelles and mitochondria to produce ATP for cell energy for functioning, decreasing treatment time and facilitate healing. The apparatus 10, 320, 360, 360, 400, 460 make the agents used on the body more efficacious and useful to the body on a cellular level.

The apparatus 10, 320, 360, 360, 400, 460 may stimulate the basic energy processes in the mitochondria (energy compartments) of each cell, particularly when near-infrared light is used to activate the color sensitive chemicals (chromophores, cytochrome systems) inside but not limited to these spectrum alone as the UV, other visible and IR spectrums may also be usable. In an embodiment optimal LED wavelengths for skin repair may include 640, 680, 730 nanometers (nm) wavelengths to IR 880 nm. Further application of blue light 400 nm to 490 via the apparatus 10, 320, 360, 360, 400, 460 may inhibit the growth and kill bacteria, fungus in and on dermatological cells. The apparatus 10, 320, 360, 360, 400, 460 may be employed to apply cosmetics, medications and/or other actives directly to the skin and maintain their presence long-term while using LED or other actinic light to increase their effect on the cells and tissue in the body. The apparatus 10, 320, 360, 360, 400, 460 are also highly portability and enable user mobility during treatment.

Chemicals 22A may include cosmetics, medications and other actives appropriate for dermatological cells including AHA's (alpha hydroxy acid), natural oils, aloe vera compounds, collagen boosters, bt, chitosan, daeses, endorphins, photodynamic drugs (PDT) like (Photofrin or ALA), vitamins A, C E or others, kojic acid, retinols or other exfoliant, salicylic acid, anti oxidants or other youth boosters and anti aging cosmetic or medications, antiseptic, antibiotics, anticancer agents, aroma therapy agents, fruit and vegetable extracts, anti-inflammatory agents, pain relievers, hormones, depilatories, and others, but the scope of this invention is not limited to these alone but can include any helpful medication, herbal formula or active compound for the skin and/or other tissues.

FIG. 8 is a block diagram of an article 780 according to various embodiments. The article 780 shown in FIG. 8 may be used in various embodiments as a part of apparatus 10, 320, 360, 360, 400, 460 where the article 780 may be any computing device including a personal data assistant, cellular telephone, laptop computer, or desktop computer. The article 780 may include a central processing unit (CPU) 782, a random access memory (RAM) 784, a read only memory (ROM") 806, a display 788, a user input device 812, a transceiver application specific integrated circuit (ASIC) 816, a digital to analog (D/A) and analog to digital (A/D) convertor 815, a microphone 808, a speaker 802, and an antenna 804. The CPU 782 may include an OS module 814 and an application module 813. The RAM 784 may include switches 56 and timers 58.

The ROM 806 is coupled to the CPU 782 and may store the program instructions to be executed by the CPU 782. The RAM 784 is coupled to the CPU 782 and may store temporary program data, overhead information, and the

queues **798**. The user input device **812** may comprise an input device such as a keypad, touch pad screen, track ball or other similar input device that allows the user to navigate through menus in order to operate the article **780**. The display **788** may be an output device such as a CRT, LCD, LED or other lighting apparatus that enables the user to read, view, or hear user detectable signals.

The microphone **808** and speaker **802** may be incorporated into the device **780**. The microphone **808** and speaker **802** may also be separated from the device **780**. Received data may be transmitted to the CPU **782** via a bus **796** where the data may include signals for an LED **32**A, **32**B, **332** or optical module or wires **331**, **458**. The transceiver ASIC **816** may include an instruction set necessary to communicate data, screens, or signals. The ASIC **816** may be coupled to the antenna **804** to communicate wireless messages, pages, and signal information within the signal. When a message is received by the transceiver ASIC **816**, its corresponding data may be transferred to the CPU **782** via the serial bus **796**. The data can include wireless protocol, overhead information, and data to be processed by the device **780** in accordance with the methods described herein.

The D/A and A/D convertor **815** may be coupled to one or more optical modules to generate a signal to be used to energize one of the optical modules. The D/A and A/D convertor **815** may also be coupled to one devices such as LEDs **32**A, **32**B and the pins **251**, **351**, **451**. Any of the components previously described can be implemented in a number of ways, including embodiments in software. Any of the components previously described can be implemented in a number of ways, including embodiments in software. Thus, the LEDs **32**A, **32**B, pins **251**, **351**, **451**, controllers **54**, switch **56**, timers **58**, controller **320** may all be characterized as "modules" herein. The modules may include hardware circuitry, single or multi-processor circuits, memory circuits, software program modules and objects, firmware, and combinations thereof, as desired by the architect of the system **10**, **30**, **50**, **60** and as appropriate for particular implementations of various embodiments.

FIG. **9**A is a simplified block diagram of a dermatological treatment architecture (DTA) **900** according to various embodiments. As shown in FIG. **9**A, architecture **900** includes a signal generation and control module (SGC) **910**, a handle module **920**, and an actuator module **930**. In an embodiment the handle module **920** may include a deployable needle module **924** and a motor and LED module **922**. In an embodiment the deployable needle module **924** may be releasably coupled to the motor and LED module **922**. In a further embodiment the deployable needle module **924** may be a disposable cartridge module **924** to be removed and disposed after one or more treatments or for each patient, client, or user.

The SGC **910** may include one or more displays **912**A, user input device **912**B, handle module interface **914**A, and actuator module interface **914**C, electrical energy storage module **913**, and one or more wheels **916**A, **916**B. In an embodiment the SGC **910** may be moveable and the wheels **916**A, **916**B may be lockable to prevent unintentional movement of the SGC **910** once positioned where desired by a user. In another embodiment the SGC **910** may also be coupled to the external power source including an alternating current (AC) grid source.

In an embodiment the displays **912**A may indicate operational parameters for a hand module **920** to be coupled or coupled to the SGC **910**. The displays **920** may be touch sensitive so a user may configure one or more operational parameters. In an embodiment the operational parameters may include electrical energy signal intensity to be applied the hand module **920**, timing of such energy application, needle deployment timing and depth(s), LED intensity and timing, and number of cycles or shots to be conducted for each actuation via the actuator **930**. In an embodiment the actuator **930** may be integral to the SGC **910** or a separate device wireless coupled or wired to the SGC **910** via a cable **914**D and the SGC **910** actuator module interface **914**C.

In an embodiment the actuator **930** may a mechanical device including a foot actuator or hand based actuator. The actuator **930** may also be an electronic device having an ASIC or running an application on a device (such as a computer, laptop, PDA, cellphone, or other electronic device) such as the module **780** shown in FIG. **8**. In an embodiment the application may enable a user to set or control any of the possible operational parameters of the SGC **910** and initiate actuation a device **920** coupled to the SGC **910**. FIG. **9**B is a block diagram of a CPU module **911** that may be employed in the SGC **910** according to various embodiments.

The CPU module **911** may include a radio frequency (RF) signal generator (RFSG) module **911**A, a needle deployment motor controller (NDMC) module **911**B, and a photonic signal generator module (PSG) **911**C. In an embodiment the photonic signal generator module **911**C may be an LED signal generator or controller module **911**C. In an embodiment a hand module **920** may include one or more photonic generation devices or modules (**922**I in FIG. **10**A, **10**B) where the PSG **911**C may generate control or energy signals that cause the photonic modules **922**I to generate photons of one or more frequencies with a desired intensity.

The NDMC **911**B may control the deployment of one or more needles **924**A of a deployable needle module **924** (FIG. **9**C) based on one or more user selected operational parameters. The parameters may determine the depth and duty cycle related to the needle(s) **924**A deployment in an embodiment. The signals generated by the NDMC **911**B to control needle deployment may vary as a function of motor (s) (**922**A, FIG. **9**C) employed to drive one or more needles **924**A. As described above an electrical signal may also be applied to the needle(s) **924**A to cause vibration of the needles or enable cutting, blending, and coagulation of the tissue in which the needles **924**A are deployed. The RFSG **911**A may generate one or more electrical signals to be applied to one or more needles **924**A based on the selected operational parameters. An electrical signal may be applied to a single needle **924**A, group of needles **924**A (mono-polar configuration) or pair(s) of needles **924**A (bipolar configuration) in an embodiment. In an embodiment the RFSG **911**A may apply signals **650**, **630**, **640**, **670** shown in FIGS. **5**A, **5**B, and **6**, a combination thereof, or other signals.

In an embodiment the CPU module **911** via the RFSG **911**A, NDMC **911**B, and PSG **911**C may create various therapy solutions including various combinations of photonic, electrical, and mechanical (needle deployment) therapy. In a further embodiment the CPU module **911** may control the generation of photonic energy to particular modules **922**I, individual or group of needle(s) **924**A deployment via one or more motors **922**A, and control electrical signal(s) applied to individual or group of needles **924**A. Accordingly the DTA **900** may apply various therapies based on user selections via the displays **912**A, user selection device **912**B, and actuator **930**. The CPU **911** may employ the algorithm **930** (FIG. **12**) or variations thereof to control the operation of the DTA **900**.

FIG. **9**C is a simplified cross-sectional diagram of a cartridge based dermatological treatment apparatus or hand

module **920** with one or more needles **924**A retracted according to various embodiments. FIG. **9**D is a simplified cross-sectional diagram of a cartridge based dermatological treatment apparatus or hand module **920** with one or more needles **924**A deployed according to various embodiments. The handle module **920** may include a deployable needle module (DNM) **924** and a motor and LED module (MLM) **922**. In an embodiment the DLM **924** may be a releasably couplable cartridge module. In a further embodiment the DLM **924** may be a detachable cartridge module (DCM) **924** where the DCM may be changed between therapy application(s) or client(s). In a further embodiment, the DCM **924** may be disposed after usage or cleaned via an autoclave or chemical process.

As shown in FIGS. **9**C and **9**D, the MLM **922** may include one or more motors **922**A, longitudinally extendable drive arms **922**B, drive shaft **922**C, outer casing **922**D, signal interface **922**E, photonic generator module **922**H, and DCM **924** interface **925** (shown in FIGS. **10**A to **10**F). The motor(s) **922**A and photonic generator module **922**H may be electrically coupled to the signal interface **922**E to received control signals and energy to operate one or more motors **922**A and photonic devices or modules **922**I of the photonic generator module **922**H. The drive arm(s) **922**B may be coupled to one or more drive shafts **922**C so the drive shafts may be moved longitudinally to deploy and retract one or more needles **924**A when the MLM **922** is operatively coupled to the DNM **924**.

As shown in FIGS. **9**C and **9**D the deployable needle module **924** may include at least one deployable needle **924**A, MLM connecting arm and drive coupling tabs **924**B, and MLM connecting/locking arms **924**C. The MLM connecting/locking arms **924**C may be configured to engage and lock to DCM **924** interface **925** recesses **925**D (FIG. **10**F). The MLM connecting arm and drive coupling tabs **924**B may be configured to disengage connecting/locking arms **924**C from the MLM interface **925** when the tabs **924**B are depressed inward in an embodiment (as shown in FIG. **10**B). The tabs **924**B may further displace drive shaft connecting arms **924**D (FIG. **10**A) inward or centrally when the tabs **924**B are depressed inwardly (as also shown in FIG. **10**B). When the connecting/locking arms **924**C are depressed inwardly or centrally (FIGS. **9**C and **9**D) from an outward position (FIG. **10**B). The arms **924**C may engage the interface **925** recesses **925**D to securely hold the DNM **924** to the MLM **922**. The arms **924**C may also displace the tabs **924**B outwardly and cause the drive shaft connecting arms **924**D to return outwardly.

The drive shaft connecting arms **924**D may securely engage the drive shaft **922**C tip **922**F (FIG. **10**E) recess **922**G (FIG. **10**E) when they return to an outward position as shown in FIGS. **10**D and **10**E. In this configuration the DNM **924** is securely coupled to the MLM **922** via the arms **924**C and **924**D. In this configuration the motor(s) **922**A via drive shaft(s) **922**C coupled to the motor **922**A shaft **922**B may reliably drive one or more needles **924**A of the DNM **924** (from a retracted or deployed position such as shown in FIGS. **9**C and **9**D, respectively). Further the motor(s) **922**A may include steps or infinite drive extension **922**B control to enable precise needle deployment depth or extension beyond the DNM **924** shell (**924**E, FIG. **10**A).

FIG. **10**A-**10**D are simplified, partial, cross-sectional diagrams of the DNM **924** in various stages of attachment to the MLM **922** via the arms **924**C and **924**D according to various embodiments. As shown in FIG. **10**A the DNM or DCM **924** is decoupled from the MLM **922**. The MLM **922** includes the photonic generator module (PGM) **922**H, interface **925**, and drive shaft tip **922**F in a distal portion. As shown in FIG. **10**A the PGM **922**H may include one or more photon modules **922**I. The photon modules **922**I may be LED modules and emit photon with various frequencies and intensities based on the PSG **911**C control signal.

As shown in FIG. **10**A the DNM or DCM **924** may include the connecting arms **924**C, deflecting tabs **924**B, drive shaft coupling arms **924**D, outer shell **924**E, and one or more needles **924**A. In an embodiment the drive shaft coupling arms **924**D may include tabs that may securely engage the drive shaft tip **922**F recess **922**G. The drive shaft coupling arms **924**D may be returnably deflectable inwardly (as shown in FIG. **10**B) via inward depression of the tabs **924**B. Such inward depression of the tabs **924**B may deflect the coupling arms **924**C outward. Similarly, inward depression of the coupling arms **924**C to engage the interface **925** recesses **925**D securely may deflect the tab arms **924**B outwardly (relative the central axis of the DNM **920**). Such outward movement may enable the drive shaft coupling arms **924**D to return to a non-deflected state as shown in FIG. **10**A.

In an embodiment a DNM or DCM **924** may be securely coupled to a MLM **922** by first completely compressing the arms or tabs **924**B as shown in FIG. **10**B. As noted above such inward compression may cause the coupling arms **924**C to deflect outwardly and the drive shaft coupling arms **924**D to be deflected inwardly towards each other. The drive shaft coupling arms **924**D may be compressed so they may fit within the drive shaft **922**C tip **922**F recess **922**G as the DNM or DCM **924** is advanced toward the MLM **922** distal end to securely couple the DNM **924** to the MLM **922** (as shown in FIG. **10**D). After the DNM or DCM **924** is placed over the MLM **922** distal end so the drive shaft coupling arms **924**D are located within the drive shaft **922**C tip **922**F recess **922**G and the coupling arms **924**C are adjacent the MLM **922** interface **925** recesses **925**D as shown in FIG. **10**C.

To complete the coupling of a DNM **924** to the MLM **922**, the coupling arms **924**C may compressed inwardly as shown in FIG. **10**D. The compression of the coupling arms **924**C may deflect the tabs or arms **924**B outwardly. Such outward deflection of the arms **924**B may enable the drive shaft coupling arms **924**D to return to a non-deflected state and securely engage the MLM **922** drive shaft **922**C tip **922**F recess **922**G (as shown in FIG. **10**D). In an embodiment a single coupling arm **924**C, drive shaft coupling arm **924**D, and tab **924**B may be employed in an DNM **924**. After the secure coupling of the DNM **924** to the MLM **922**, the MLM **922** via the motor(s) **922**A may controllably deploy one or more needles **924**A as shown in FIG. **10**E. FIG. **10**F is a simplified cross-sectional diagram of a DNM interface **925** according to various embodiments.

As noted the interface **925** may include one or more recesses **925**D to be securely engaged to DNM **924** coupling arms **924**C. The interface **925** may also include several fenestrations or openings **925**A, **925**B, **925**C (FIG. **10**F). The central fenestration **925**A may be sized to enable passage of the MLM **922** drive shaft **922**C tip **922**F. The fenestrations **925**C may be sized and located above one or more photon modules **922**I to enable photons generated by the photon modules **922**I to pass into the DNM **924**. In an embodiment the DNM **924** outer casing **924**E may be translucent and act as a waveguide to communicate photons to the needle area of the DNM **924**. The fenestrations **925**B may be sized and configured to enable electrical coupling pins **924**G (FIG. **11**A) passage from the DNM **924** to electrical couplings of the MLM **922**. The pins **924**G may

communicate electrical signals from the RFSG **911**A to one or more needles **924**A via the wires **914**B and MLM **922**.

FIG. **11**A is a simplified, partial, cross-sectional diagram of DNM **924** coupled to a MLM **922** with needles **924**A deployed according to various embodiments. As shown in FIG. **11**A, the DNM **924** may further include electrical coupling pins **924**G set with a spring loaded base **924**H (in an embodiment). As noted the pins **924**G may extend to electrical contacts in the MLM **922** via the interface **925** fenestrations **925**B. Although a pair of pins **924**G is shown, one or more pins **924**G may be employed in a DNM **924** according to various embodiments. A drive shaft coupling arm **924**D may include an offset **924**I where the offset may be configured to engage a tab or arm **924**B.

As shown in FIG. **11**A when the needle array or assemble **924**F is deployed depression of the tabs **924**B inwardly will not engage the drive shaft coupling arms **924**D (via the offsets **924**I). Such a configuration may prevent unintentional decoupling of the DNM **924** to the MLM **922** when the needle assembly **924**F is at least partially deployed. As shown in FIG. **11**A, the electrical contact pin **924**G is sized to fit within the spring loaded based **924**H. In an embodiment the internal spring **924**M (FIG. **11**C) may force extension of the pin **924**G to maintain electrical conduction with the MLM **922** as the needle assembly **924**F is moved (recessed and deployed to various depths). FIG. **11**B is a simplified, cross-sectional diagram of a DNM **924** needle assembly **924**F according to various embodiments. FIG. **11**C is a simplified, cross-sectional, exploded diagram of the DNM **924** needle assembly **924**F according to various embodiments. As shown in FIGS. **11**B and **11**C, the needle assembly **924**F may include a pin cover **924**J, drive arm module **924**L, needles **924**A, pins **924**G with bases **924**H, and needle printed circuit board (PCB) **924**K.

In an embodiment the PCB **924**K may couple one or more needles **924**A to a first pin **924**G base **924**H and another one or more needles **924**A to another pin **924**G based **924**H. The first pin **924**G and second pin **924**H may couple alternating rows or columns of needles **924**A to form one or more dipoles between such needles **924**A. The drive shaft coupling arms **924**D may have a base **924**L where the cover **924**J includes fenestrations for the needles **924**A, a recess for the PCB **924**K, and an outer recess for the coupling arm base **924**L (as shown assembled in FIG. **11**B).

FIG. **12** is a flow diagram illustrating a DTA **900** processing algorithms **930** according to various embodiments. As noted the DTA **900** SGC **911** RFSG **911**A, NDMC **911**B, and PSG **911**C may enable a user or clinician to select a variety of operational parameters to deliver a desired combination of electrical, light (photonic), and mechanical (needle) therapy to dermatological tissue. In the algorithm **930**, a user may select different operational modes including cut (activities **932**A to **932**F), blend (activities **934**A to **934**F), and coagulation (activities **936**A to **936**F) in an embodiment. In a cut operational mode, a user may select the electrical signal intensity (activity **932**B) and application time (activity **932**C). The CPU **911** may determine the total energy that will be applied for each activation based on the selected intensity and time (total fluence—activity **932**D). Then, upon activation (activity **932**E, **932**F) the DTA **900** may energize the MLM **922** based on the operational parameters.

In a blend operational mode (activity **934**A), a user may select the electrical signal intensity, start delay, and duty cycle (activity **934**B) and needle deployment depth and number of shots per activation (activity **934**C). The duty cycle may include the delay before energy and needle deployment, the time the energy and needles are deployed, and the subsequent off or rest time before the next possible duty cycle. As noted above the motor(s) **922**A may enable precise needle extension (effective depth) control. In an embodiment the motor(s) **922**A may include a transverse motor that converts rotational force to longitudinal force. The motor may be a Haydon model number: 21H4AB-05-049 having a motor speed of about 0.005 mm/msec and motor power of about 1000 Hz approximately 40N (Newton) (described in detail at www.haydonkerk.com and whose specifications are incorporated by reference).

The CPU **911** may determine the total energy that will be applied for each activation based on the selected intensity and duty cycle (total fluence—activity **934**D). Then, upon activation (activity **934**E, **934**F) the DTA **900** may energize the MLM **922** based on the operational parameters and deploy the needle assembly **924**F to a desired extension beyond the DNM **924** shell **924**E to enable a desired depth of needle **924**A penetration within tissue when the shell **924**E is placed adjacent the tissue.

In a coagulation operational mode (activity **936**A), a user may select the electrical signal intensity and start delay (activity **936**B) and needle deployment depth and number of shots per activation (activity **936**C). As noted above the motor(s) **922**A may enable precise needle extension (effective depth) control. The CPU **911** may determine the total energy that will be applied for each activation based on the selected intensity (total fluence—activity **936**D). Then, upon activation (activity **936**E, **936**F) the DTA **900** may energize the MLM **922** based on the operational parameters and deploy the needle assembly **924**F to a desired extension beyond the DNM **924** shell **924**E to enable a desired depth of needle **924**A penetration within tissue when the shell **924**E is placed adjacent the tissue.

Applications that may include the novel apparatus and systems of various embodiments include electronic circuitry used in high-speed computers, communication and signal processing circuitry, modems, single or multi-processor modules, single or multiple embedded processors, data switches, and application-specific modules, including multilayer, multi-chip modules. Such apparatus and systems may further be included as sub-components within a variety of electronic systems, such as televisions, cellular telephones, personal computers (e.g., laptop computers, desktop computers, handheld computers, tablet computers, etc.), workstations, radios, video players, audio players (e.g., mp3 players), vehicles, medical devices (e.g., heart monitor, blood pressure monitor, etc.) and others. Some embodiments may include a number of methods.

It may be possible to execute the activities described herein in an order other than the order described. Various activities described with respect to the methods identified herein can be executed in repetitive, serial, or parallel fashion.

A software program may be launched from a computer-readable medium in a computer-based system to execute functions defined in the software program. Various programming languages may be employed to create software programs designed to implement and perform the methods disclosed herein. The programs may be structured in an object-orientated format using an object-oriented language such as Java or C++. Alternatively, the programs may be structured in a procedure-orientated format using a procedural language, such as assembly or C. The software components may communicate using a number of mechanisms well known to those skilled in the art, such as application program interfaces or inter-process communication tech-

niques, including remote procedure calls. The teachings of various embodiments are not limited to any particular programming language or environment.

The accompanying drawings that form a part hereof show, by way of illustration and not of limitation, specific embodiments in which the subject matter may be practiced. The embodiments illustrated are described in sufficient detail to enable those skilled in the art to practice the teachings disclosed herein. Other embodiments may be utilized and derived therefrom, such that structural and logical substitutions and changes may be made without departing from the scope of this disclosure. This Detailed Description, therefore, is not to be taken in a limiting sense, and the scope of various embodiments is defined only by the appended claims, along with the full range of equivalents to which such claims are entitled.

Such embodiments of the inventive subject matter may be referred to herein individually or collectively by the term "invention" merely for convenience and without intending to voluntarily limit the scope of this application to any single invention or inventive concept, if more than one is in fact disclosed. Thus, although specific embodiments have been illustrated and described herein, any arrangement calculated to achieve the same purpose may be substituted for the specific embodiments shown. This disclosure is intended to cover any and all adaptations or variations of various embodiments. Combinations of the above embodiments, and other embodiments not specifically described herein, will be apparent to those of skill in the art upon reviewing the above description.

The Abstract of the Disclosure is provided to comply with 37 C.F.R. § 1.72(b), requiring an abstract that will allow the reader to quickly ascertain the nature of the technical disclosure. It is submitted with the understanding that it will not be used to interpret or limit the scope or meaning of the claims. In the foregoing Detailed Description, various features are grouped together in a single embodiment for the purpose of streamlining the disclosure. This method of disclosure is not to be interpreted to require more features than are expressly recited in each claim. Rather, inventive subject matter may be found in less than all features of a single disclosed embodiment. Thus the following claims are hereby incorporated into the Detailed Description, with each claim standing on its own as a separate embodiment.

What is claimed is:

1. A method of treating dermatological tissue, comprising:

placing a user holdable device releasably couplable deployable needle module end surface on or near dermatological tissue to be treated, the user holdable device including a proximal end and the releasably couplable deployable needle module, the releasably couplable deployable needle module mechanically separatably from the user holdable device proximal end and including a needle assembly including a plurality of needles, the needle assembly movable within the releasably couplable deployable needle module to extend the plurality of needles from the releasably couplable deployable needle assembly end surface while at least one electrical contact of the needle assembly remains electrically coupled to at least one electrical contact of the user holdable device proximal end; and

communicating electrical signals from the user holdable device proximal end to the needle assembly via the electrical contacts.

2. The method of claim **1**, further comprising energizing a motor coupled to the needle assembly to cause the plurality of the needles to extend a desired distance from the releasably couplable deployable needle module end surface.

3. The method of claim **2**, further comprising energizing the plurality of needles via a signal generator electrically coupled to the user holdable device proximal end.

4. The method of claim **3**, wherein the user holdable device proximal end further includes at least one embedded LED therein and further including energizing the at least one embedded LED so the at least one embedded LED illuminates the releasably couplable deployable needle module.

5. The method of claim **4**, wherein the needle assembly includes a translucent section and further including energizing the least one embedded LED to illuminate the plurality of needles via the needle assembly translucent section.

6. The method of claim **3**, further comprising energizing the motor to deploy the plurality of needles to a predetermined depth and directing the signal generator to energize the plurality of needles at a predetermined intensity for a predetermined duty cycle.

7. The method of claim **1**, wherein one of the at least one electrical contacts is extendable.

8. The method of claim **1**, wherein the user holdable device proximal end includes a motor with a drive shaft releasably couplable to the needle assembly and the method further including energizing the motor coupled via the drive shaft to the needle assembly to cause the plurality of needles to extend a desired distance from the releasably couplable deployable needle module end surface.

9. The method of claim **1**, wherein one of the at least one electrical contacts includes a pin that is extendable in the same direction as the plurality of needles.

10. The method of claim **1**, wherein a first electrical contact of the at least one electrical contact is electrically coupled to a first plurality of the plurality of needles and a second electrical contact of the at least one electrical contact is electrically coupled to a second, different plurality of the plurality of needles.

11. The method of claim **1**, wherein one of the user holdable device proximal end and the needle assembly includes at least two extendable electrical contacts and the other includes at least two electrical contacts couplable to at least two extendable electrical contacts.

12. An apparatus for treating dermatological tissue, comprising:

a user holdable device including a proximal end and

a releasably couplable deployable needle module, the releasably couplable deployable needle module mechanically separatably from the user holdable device proximal end and including a needle assembly including a plurality of needles, the needle assembly movable within the releasably couplable deployable needle module to extend the plurality of needles from the releasably couplable deployable needle assembly end surface while at least one electrical contact of the needle assembly remains electrically coupled to at least one electrical contact of the user holdable device proximal end.

13. The apparatus of claim **12**, further including a motor coupled to the needle assembly to extend the plurality of needles a desired distance from the releasably couplable deployable needle assembly end surface when the motor is energized with a particular signal.

14. The apparatus of claim **13**, further including a signal generator electrically coupled to the user holdable device proximal end to energize the plurality of needles.

15. The apparatus of claim **14**, wherein the user holdable device proximal end includes an electrical connector couplable to the signal generator.

16. The apparatus of claim **13**, wherein the user holdable device proximal end includes the motor, the motor including a drive shaft releasably couplable to the needle assembly.

17. The apparatus of claim **12**, wherein the user holdable device proximal end further includes at least one embedded LED therein and the apparatus further including a photonic signal generator electrically coupled to the least one embedded LED, the at least one embedded LED capable of illuminating the needle assembly when energized.

18. The apparatus of claim **12**, wherein one of the at least one electrical contacts includes a pin that is extendable in the same direction as the plurality of needles.

19. The apparatus of claim **12**, wherein one of the user holdable device proximal end and the needle assembly includes at least two extendable electrical contacts and the other includes at least two electrical contacts couplable to the at least two extendable electrical contacts.

20. The apparatus of claim **12**, wherein one of the at least one electrical contacts is extendable.

* * * * *