UNITED STATES PATENT AND TRADEMARK OFFICE

BEFORE THE PATENT TRIAL AND APPEAL BOARD

JEISYS MEDICAL INC. AND ILOODA CO., LTD.,
Petitioners,

v.

SERENDIA, LLC,
Patent Owner.

U.S. Patent No. 9,320,536
Filed: February 22, 2012
Issued: April 26, 2016
Inventor: Jongju Na

TITLE: METHOD, SYSTEM, AND APPARATUS
FOR DERMATOLOGICAL TREATMENT

Inter Partes Review No. IPR2024-00384

PETITION FOR *INTER PARTES* REVIEW

TABLE OF CONTENTS

I. INTRODUCTION 1
II. COMPLIANCE WITH REQUIREMENTS OF AN INTER PARTES REVIEW PETITION 2
A. Grounds for Standing (§ 42.104(a)) 2
B. Fee for *Inter Partes* Review (§ 42.15(a)) 2
C. Mandatory Notices (§ 42.8(b)) 2
1. Real Party-In-Interest (§ 42.8(b)(1)) 2
2. Related Matters (§ 42.8(b)(2)) 2
3. Lead and Back-Up Counsel (§ 42.8(b)(3)) 4
4. Service Information (§ 42.8(b)(4)) 5
III. IDENTIFICATION OF CHALLENGE AND STATEMENT OF PRECISE RELIEF REQUESTED 6
IV. THE ’536 PATENT 7
A. Brief Description 8
B. Prosecution History of the ’536 Patent 11
C. Priority Date of the Challenged Claims 11
V. THE PRIOR ART 13
A. Mehta (EX1004) 13
B. Na ’848 (EX1005) 14
C. Lee (EX1011) 14
D. Livneh (EX1012) 14
VI. LEVEL OF ORDINARY SKILL IN THE ART 14
VII. HOW THE CHALLENGED CLAIMS ARE TO BE CONSTRUED 15
A. Agreed Constructions From ITC Action 16
B. Deployable Needle Assembly End Surface 16
C. Separatably 17

D. Deployable Needle Assembly Mechanically Separatably from the Proximal End 17

E. Draft Shaft 17

F. Desired Distance / Predetermined Depth 17

VIII. DETAILED EXPLANATION OF GROUNDS FOR CHALLENGE 19

A. Ground I: Claims 1-3, 6, 8-9, 11-13, 16, and 18-19 are Anticipated by Mehta 19

1. Independent Claim 11 19

2. Dependent Claim 12 36

3. Dependent Claim 13 37

4. Dependent Claim 16 38

5. Dependent Claim 18 39

6. Dependent Claim 19 39

7. Independent Claim 1 41

8. Dependent Claim 2 45

9. Dependent Claim 3 45

10. Dependent Claim 6 46

11. Dependent Claim 8 46

12. Dependent Claim 9 46

B. Ground II: Claims 1-9 and 11-19 are Obvious over Mehta in view of the knowledge of a POSA 46

1. Independent Claims 1 and 11 46

2. Dependent Claims 2-3, 6, 8-9, 12-13, 16, and 18-19 50

3. Dependent Claims 4-5 and 14-15 51

4. Dependent Claims 7 and 17 56

5. Dependent Claims 9 and 19 58

C. Ground III: Claims 4-5 and 14-15 are Obvious over Mehta, Na '848, and the Knowledge of a POSA 58

1. The Mehta-Na '848 Combination 58

2. Dependent Claims 4 and 14 62

3. Dependent Claims 5 and 15 62

D. Ground IV: Claims 7 and 17 are Obvious over Mehta in view of Livneh 63

1. The Mehta-Livneh Combination 63

2. Dependent Claims 7 and 17 68

E. Ground V: Claims 1-3, 6, 8-9, 11-13, 16, and 18-19 are obvious over Mehta and Lee 68

1. The Mehta-Lee Combination 68

2. Claims 1-3, 6, 8-9, 11-13, 16, and 18-19 71

F. Ground VI: Claims 1-9 and 11-19 are obvious over Mehta and Lee in view of the Knowledge of a POSA 72

G. Ground VII: Claims 4-5 and 14-15 Would Have Been Obvious over Mehta, Lee, Na '848, and the Knowledge of a POSA 73

1. The Mehta, Lee, and Na '848 Combination 73

H. Ground VIII: Claims 7 and 17 are Obvious over Mehta, Lee, and Livneh 74

1. The Mehta, Lee and Livneh Combination 74

IX. THE BOARD SHOULD INSTITUTE TRIAL UNDER SECTIONS 314 AND 325 75

A. The Board Should Not Exercise Its Discretion to Deny Institution Under 35 U.S.C. § 314(a) 76

B. The Board Should Not Exercise Its Discretion to Deny Institution Under 35 U.S.C. § 325(d) 79

X. CONCLUSION 80

TABLE OF AUTHORITIES

Cases

Blue Calypso, LLC v. Groupon, Inc.,
815 F.3d 1331 (Fed. Cir. 2016) 25

Dynamic Drinkware, LLC v. Nat'l Graphics, Inc.,
800 F.3d 1375 (Fed. Cir. 2015) 13

In re Inland Steel,
265 F.3d 1354 (Fed. Cir. 2001) 71

KSR Int'l Co. v. Teleflex Inc.,
550 US 398 (2007) 60, 71

Omega Eng'g, Inc., v. Raytek Corp.,
334 F.3d 1314 (Fed. Cir. 2003) 18

Phillips v. AWH Corporation,
415 F.3d 1303 (Fed. Cir. 2005) 15

Serendia, LLC v. Cutera, Inc.,
No. 1:23-cv-00222, Dkts. 10 (Apr. 4, 2023 D. Del.) 78

Serendia, LLC v. Cynosure, LLC,
No. 1:23-cv-00223, Dkts. 11 (Apr. 5, 2023 D. Del.) 79

Statutes

35 U.S.C. § 102 ..... 6, 7, 13, 14

35 U.S.C. § 103 ..... 6, 7, 46, 58, 63

35 U.S.C. § 120 12

35 U.S.C. § 311-319 83

35 U.S.C. § 314 ..... 75, 76

35 U.S.C. § 325 ..... 75, 79, 80

35 U.S.C. §119 12

Other Authorities

Vidal, K., Memorandum,
"Interim Procedure for Discretionary Denials in AIA Post-Grant Proceedings with Parallel District Court Litigation" (USPTO Jun. 21, 2022)..... 76, 78, 79

Regulations

37 C.F.R. § 42.10 4
37 C.F.R. § 42.100 .....15, 83
37 C.F.R. § 42.104 .....2, 19
37 C.F.R. § 42.15 2
37 C.F.R. § 42.24 82
37 C.F.R. § 42.8 ..... 2, 4, 5, 82

Board Decisions

Advanced Bionics, LLC v. Med-el Elektromedizinische Geräte GmbH,
IPR2019-01469, 2020 WL 740292 (P.T.A.B. Feb. 13, 2020) 80

Coalition for Affordable Drugs VI, LLC v. Celgene Corporation,
IPR2015-01092, Paper 19 (P.T.A.B. Sept. 25, 2015) 76

Code200, UAB v. Bright Data Ltd.,
IPR2022-00861, 2022 WL 3646167 (P.T.A.B. August 23, 2022).....76, 78

General Plastic Industrial v. Canon Kabushiki Kaisha,
IPR2016-01357, Paper 19 (P.T.A.B. Sept. 6, 2017) 77

Illumina v. Ravgen,
IPR2021-01271, Paper 12 (P.T.A.B. Jan. 26, 2022) 77

Netflix, Inc. et al. v. Uniloc 2017 LLC,
IPR2020-00041, Paper 10 (P.T.A.B. Mar. 25, 2020).....78

Toyota Motor Corporation v. Intellectual Ventures II,
IPR2022-00708, Paper 12 (P.T.A.B. Oct. 12, 2022).....77, 78

Valve Corp. v. Elec. Scripting Prods., Inc.,
IPR2019-00062, Paper 11 at 2 (P.T.A.B. Apr. 2, 2019) 77

Western Digital Corporation v. SPEX Technologies, Inc.,
IPR2018-00082, 2018 WL 1990246 (P.T.A.B. Apr. 25, 2018).....78

Western Digital Technologies Inc. v. Viasat, Inc.,
IPR2022-01126, Paper 13 (P.T.A.B. Nov. 29, 2022) 77

EXHIBITS

Exhibit	Description
1001	U.S. Patent No. 9,320,536 ("the '536 Patent")
1002	Certified Copy of File Wrapper of the '536 Patent
1003	Declaration of Dany Bérubé, Ph.D.
1004	U.S. Patent No. 8,608,737 to Mehta *et al.* ("Mehta")
1005	International Patent Application Publication No. WO 2010/016848 by Na *et al*. ("Na '848")
1006	[Reserved]
1007	Order No. 35 Construing Certain Terms of the Asserted Claims (Markman Claim Construction) from Related ITC Action
1008	[Reserved]
1009	[Reserved]
1010	Korean Registered Utility Model KR20-0441552 to Lee *et al.* ("Lee")
1011	Certified Translation of Korean Registered Utility Model KR20-0441552 to Lee *et al.* ("Lee")
1012	International Patent Application Publication No. WO 2008/005477 by Livneh ("Livneh")
1013	Korean Registered Patent KR10-0719395 to Kang ("Kang")
1014	Certified Translation of Korean Registered Patent KR10-0719395 to Kang ("Kang")
1015	U.S. Patent No. 7,824,394 to Manstein ("Manstein")
1016	U.S. Patent No. 7,618,429 to Mulholland ("Mulholland")

Exhibit	Description
1017	U.S. Patent Application Publication No. 2007/0142885 by Hantash *et al*. ("Hantash").
1018	U.S. Patent Application Publication No. 2009/0093749 by Shalev *et al*. ("Shalev")
1019	U.S. Patent Application Publication No. 2009/0048557 by Yeshurun *et al*. ("Yeshurun")
1020	U.S. Patent No. 9,775,774 to Na ("the '774 patent")

Jeisys Medical Inc. ("Jeisys") and Ilooda Co., Ltd. ("Ilooda") (collectively "Petitioners") request *inter partes* review ("IPR") of claims 1-9 and 11-19 of U.S. Patent No. 9,320,536 ("the '536 patent") (EX1001), assigned to Serendia, LLC ("Patent Owner" or "Serendia").

I. INTRODUCTION

The '536 patent is directed to microneedling: a procedure that rejuvenates and improves the appearance of a patient's skin. During treatment, percutaneous delivery of energy causes contraction of collagen tissue in the skin, reducing the visibility of fine lines and wrinkles. Microneedling also triggers a natural healing response, causing additional collagen production and thereby rejuvenating and tightening the patient's skin.

Microneedling has long been the subject of research and development efforts in the aesthetics field. Years before the priority date of the '536 patent claims, one of Serendia's competitors (Syneron Medical Ltd., "Syneron") developed a microneedling apparatus and corresponding treatment methods. Syneron's technology is disclosed in U.S. Patent No. 8,608,737 ("Mehta," EX1004)—which anticipates and/or renders obvious every independent claim of the '536 patent. Mehta was not considered by the USPTO during prosecution of the application that issued as the '536 patent. Nor was Serendia's own prior art patent publication from the same family as the '536 patent considered.

In view of this Petition and the supporting evidence, Petitioners respectfully request that claims 1-9 and 11-19 of the ’536 patent be held unpatentable and canceled.

II. COMPLIANCE WITH REQUIREMENTS OF AN INTER PARTES REVIEW PETITION

A. Grounds for Standing (§ 42.104(a))

Pursuant to 37 C.F.R. § 42.104(a), Petitioners certify that the ’536 patent is available for IPR and that Petitioners are not barred or estopped from requesting IPR based on the grounds identified in this petition.

B. Fee for *Inter Partes* Review (§ 42.15(a))

This Petition is accompanied by the fees set forth in 37 C.F.R. § 42.15(a). Please charge or credit Deposit Account No. 12-1216 with any shortage or overpayment of fees associated with this Petition and any other fees incurred by Petitioners.

C. Mandatory Notices (§ 42.8(b))

1. Real Party-In-Interest (§ 42.8(b)(1))

Petitioners certify that the real parties-in-interest are Jeisys and Ilooda.

2. Related Matters (§ 42.8(b)(2))

The ’536 patent is asserted in the following pending cases:

- U.S. International Trade Commission: *In the Matter of Certain Dermatological Treatment Devices and Components Thereof*, Inv. No. 337-TA-1356 ("ITC action")[1]
- *Serendia, LLC v. Cynosure, LLC*, No. 1:23-cv-00223 (D. Del.)[2]
- *Serendia, LLC v. Cutera, Inc.*, No. 1:23-cv-00222 (D. Del.)[3]
- *Serendia, LLC v. EndyMed Medical, Inc.*, No. 1:23-cv-00224 (D. Del.)
- *Serendia, LLC v. Lutronic Aesthetics, Inc.*, No. 1:23-cv-00225 (D. Del.)
- *Serendia, LLC v. Rohrer Aesthetics, Inc.*, No. 1:23-cv-00226 (D. Del.)

Petitioners are not aware of any disclaimers or reexamination certificates related to the '536 patent. U.S. Patent No. 9,775,774 ("the '774 patent"), which issued from a continuation of the application leading to the '536 patent, and 10,869,812 ("the '812 patent"), which issued from a continuation of the application leading to the '774 patent, are or will be the subject of other requests for IPR filed by Petitioners.

The '536, '774, and '812 patents were the subject of IPR petitions filed by Cartessa Aesthetics, LLC on December 28, 2021 ("Cartessa Aesthetics IPRs"),

---

[1] Serendia is the Complainant in the ITC action; Jeisys and Ilooda are Respondents in the ITC action.
[2] Cynosure, LLC is a distributor for Jeisys with respect to Jeisys accused products sold in the U.S.
[3] Cutera, Inc. is a distributor for Ilooda with respect to Ilooda accused products sold in the U.S.

which relied on prior art different from that forming the Grounds herein, in the following proceedings:

Patent	IPR No.	Institution Decision
’536	IPR2022-00378	Institution Denied
’774	IPR2022-00376	Institution Denied
’812	IPR2022-00377	Institution Denied

3. Lead and Back-Up Counsel (§ 42.8(b)(3))

Petitioners designate the following counsel:

Lead Counsel: Wesley O. Mueller (USPTO Reg. No. 33,976)
Email: wmueller@leydig.com

Backup Counsel: Leonard Z. Hua (USPTO Reg. No. 69,247)
Email: lhua@leydig.com

Paul J. Filbin (USPTO Reg. No. 51,677)
Email: pfilbin@leydig.com

Brent A. Chatham (USPTO Reg. No. 73,954)
Email: bchatham@leydig.com

Scott Weidenfeller (No. 54,531)
Email: sweidenfeller@cov.com

Anupam Sharma (Reg. No. 55,609)
Email: asharma@cov.com

Peter P. Chen (Reg. No. 39,631)
Email: pchen@cov.com

Wonseon Kiersten Choi (Reg. No. 73,012)
Email: WChoi@cov.com

Pursuant to 37 C.F.R. § 42.10(b), Petitioners have filed a power of attorney with the above designation of counsel.

4. Service Information (§ 42.8(b)(4))

Petitioners provide the following service information for designated counsel. Petitioners consent to electronic service by email at the email addresses of the counsel provided below.

Mailing Addresses and Contact Information:

Wesley O. Mueller
Leonard Z. Hua
Paul J. Filbin
Brent A. Chatham
LEYDIG, VOIT & MAYER, LTD.
Two Prudential Plaza, Suite 4900
180 North Stetson Avenue
Chicago, Illinois 60601-6745
Tel: (312) 616-5600
Fax: (312) 616-5700
wmueller@leydig.com
lhua@leydig.com
pfilbin@leydig.com
bchatham@leydig.com

Scott Weidenfeller
Wonseon Kiersten Choi
COVINGTON & BURLING LLP
One CityCenter,
850 Tenth Street, N.W.
Washington, DC 20001-4956
Tel: (202) 662-5923
Fax: (202) 662-6291
sweidenfeller@cov.com
wchoi@cov.com

Anupam Sharma
Peter P. Chen
COVINGTON & BURLING LLP

3000 El Camino Real
5 Palo Alto Square, 10th Floor
Palo Alto, CA 94306
Tel: (650) 632-4700
Fax: (202) 662-6291
asharma@cov.com
pchen@cov.com

III. IDENTIFICATION OF CHALLENGE AND STATEMENT OF PRECISE RELIEF REQUESTED

Petitioners challenge claims 1-9 and 11-19 of the '536 patent and request that these claims be found unpatentable and canceled in view of the following references:

(1) U.S. Patent No. 8,608,737 to Mehta *et al.* ("Mehta") (EX1004);

(2) International Patent Publication No. WO 2010/016848 to Na *et al.* ("Na '848") (EX1005);

(3) International Patent Publication No. WO 2008/005477 to Livneh ("Livneh") (EX1012); and

(4) Korean Registered Utility Model KR20-0441552 to Lee *et al.* ("Lee") (EX1011).

Petitioners assert the following grounds of unpatentability under 35 U.S.C. §§ 102 and 103 (AIA):

Ground	**References**	**Statutory Basis**	**Challenged Claims**
Ground I	Mehta	§ 102	Claims 1-3, 6, 8-9, 11-13, 16, and 18-19
Ground II	Mehta and POSA	§ 103	Claims 1-9, 11-19
Ground III	Mehta and Na '848	§ 103	Claims 4-5 and 14-15
Ground IV	Mehta and Livneh	§ 103	Claims 7 and 17
Ground V	Mehta and Lee	§ 103	Claims 1-3, 6, 8-9, 11-13, 16, and 18-19
Ground VI	Mehta, Lee, and POSA	§ 103	Claims 1-9, 11-19
Ground VII	Mehta, Lee, and Na '848	§ 103	Claims 4-5 and 14-15
Ground VIII	Mehta, Lee, and Livneh	§ 103	Claims 7 and 17

In support of the proposed Grounds, this Petition includes a full statement of the reason why each of the challenged claims should be held unpatentable under 35 U.S.C. §§ 102 and 103. Petitioners rely on the exhibits identified herein, including the prior art noted above and the declaration of Dany Bérubé, Ph.D. (EX1003), an expert with over 25 years of experience in the medical device industry. *See* EX1003, ¶¶4-11, App'x A.

IV. THE '536 PATENT

The '536 patent, titled "Method, System, and Apparatus for Dermatological Treatment," was filed on February 22, 2012, and issued on April 26, 2016. EX1001 at 1.

A. Brief Description

The ’536 patent relates to systems and methods “used in treating dermatological tissue.” *Id.* at 1:25-27. The ’536 patent provides “a cartridge based dermalogical [*sic*] treatment apparatus or hand module 920 with one or more needles 924A.” EX1001 at 10:42-45, FIGS. 9C-9D (reproduced below).

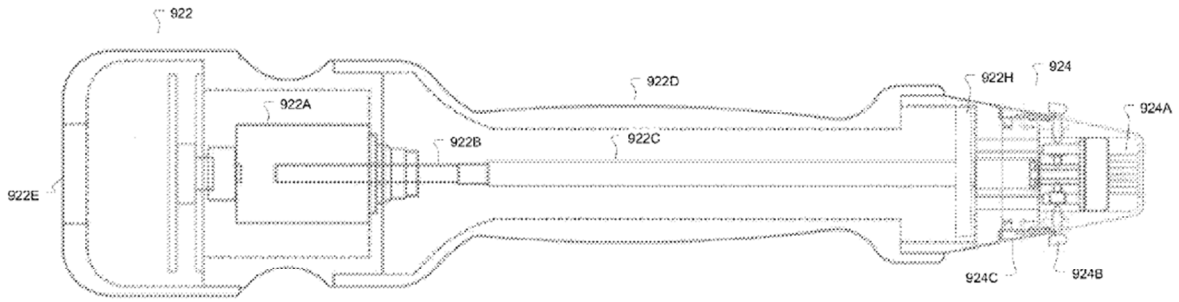

920

FIGURE 9C

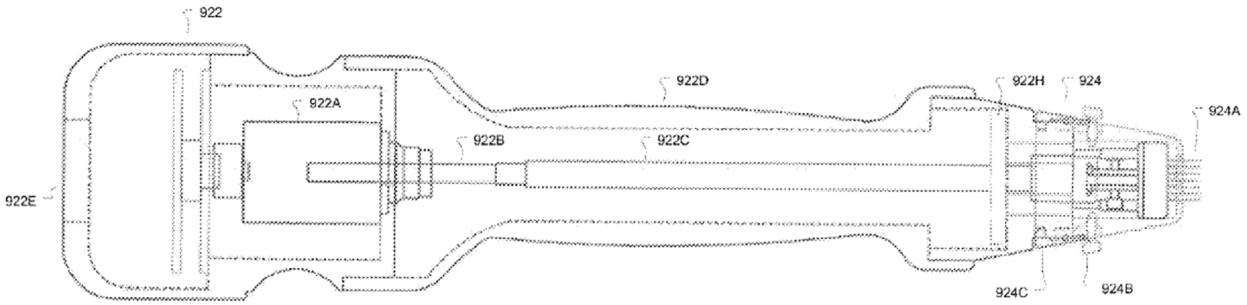

920

FIGURE 9D

<u>’536 Patent—FIGS. 9C and 9D</u>

The hand module 920 includes a disposable deployable needle module (DNM) 924 and a motor and LED module (MLM) 922. EX1001 at 10:48-56, FIG. 10A (reproduced below).

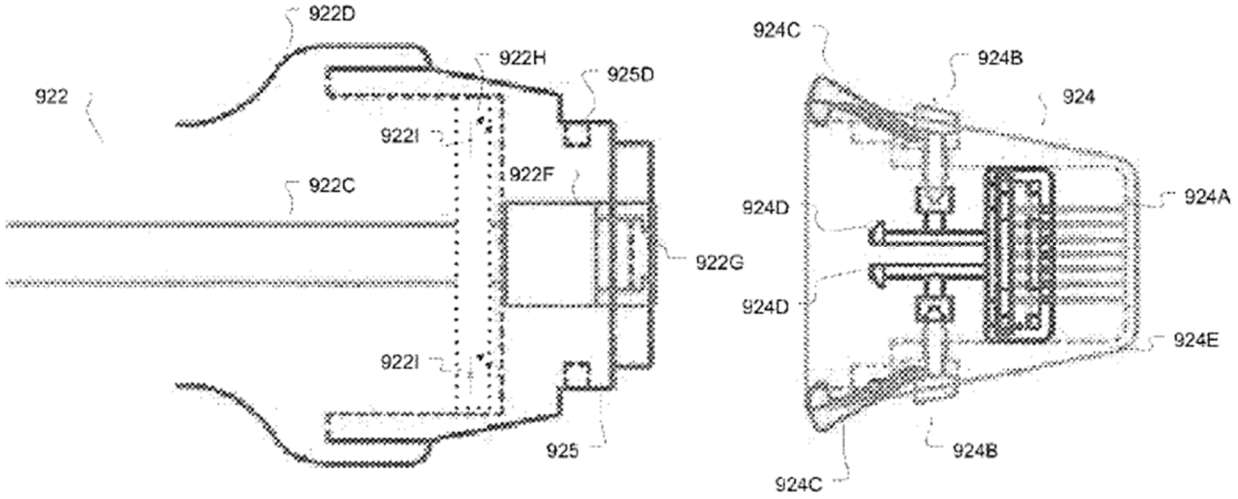

’536 Patent—FIG. 10A

The MLM 922 includes one or more motors and drive shafts to deploy and retract needles 924A of the DNM 924. *See* EX1001, at 10:57-11:2, FIG. 11A (reproduced below).

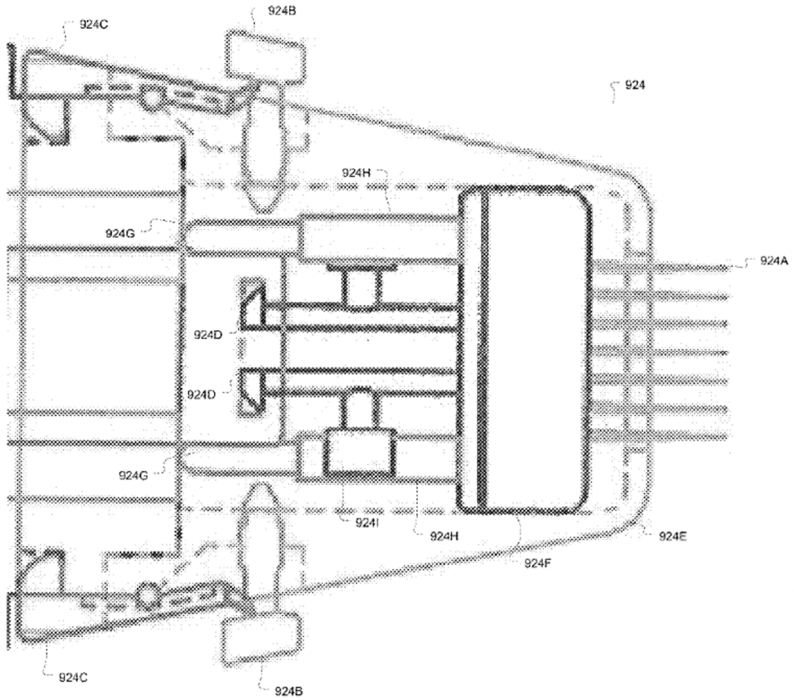

’536 Patent—FIG. 11A

The DNM 924 includes needle assembly 924F, illustrated in FIGS. 11B and 11C (reproduced below).

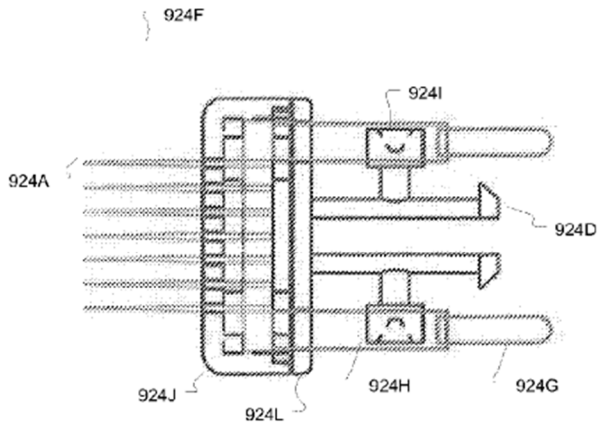

FIGURE 11B

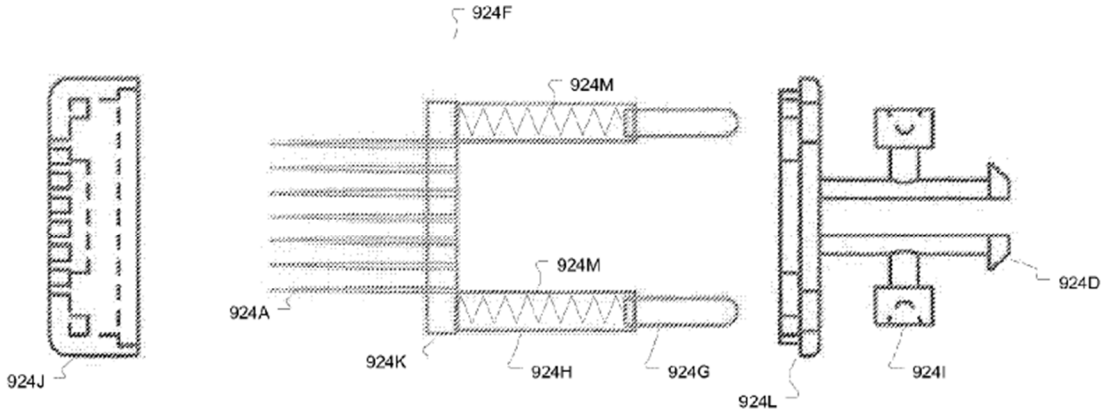

FIGURE 11C

<u>'536 Patent—FIGS. 11B and 11C</u>

To apply treatment, a controller module generates signals to control deployment of the needles, and a signal generator module generates electrical signals applied to the needles. EX1001, at 10:9-28.

B. Prosecution History of the ’536 Patent

The application leading to the ’536 patent (U.S. Appl. No. 13/825,083) was filed on February 22, 2012, with 20 original claims. EX1002 at 47-49, 170, 229-234.

During prosecution, certain claims were rejected based on U.S. Patent No. 6,890,319 to Crocker and U.S. Patent No. 7,618,429 to Mulholland. *See id.* at 278-279. No rejection made during prosecution relied on any of the prior art forming the Grounds herein.

A Notice of Allowance was issued on January 14, 2016, and the ’536 patent issued on April 26, 2016. *See id*. at 298-302, 335.

C. Priority Date of the Challenged Claims

As depicted below, the ’536 patent recites priority to a parent application which in turn claims priority to two separate chains: (1) the “2011 provisional chain” and (2) the “2008 Korean chain,” which includes Na ’848 (EX1005). Because several elements of each the ’536 patent claims (such as “extendable” needles) are plainly absent from the 2008 Korean chain, the challenged claims are not entitled to any priority date from that chain and, therefore, have a priority date

no earlier than the March 3, 2011 filing date of the progenitor application of the 2011 provisional chain[4].

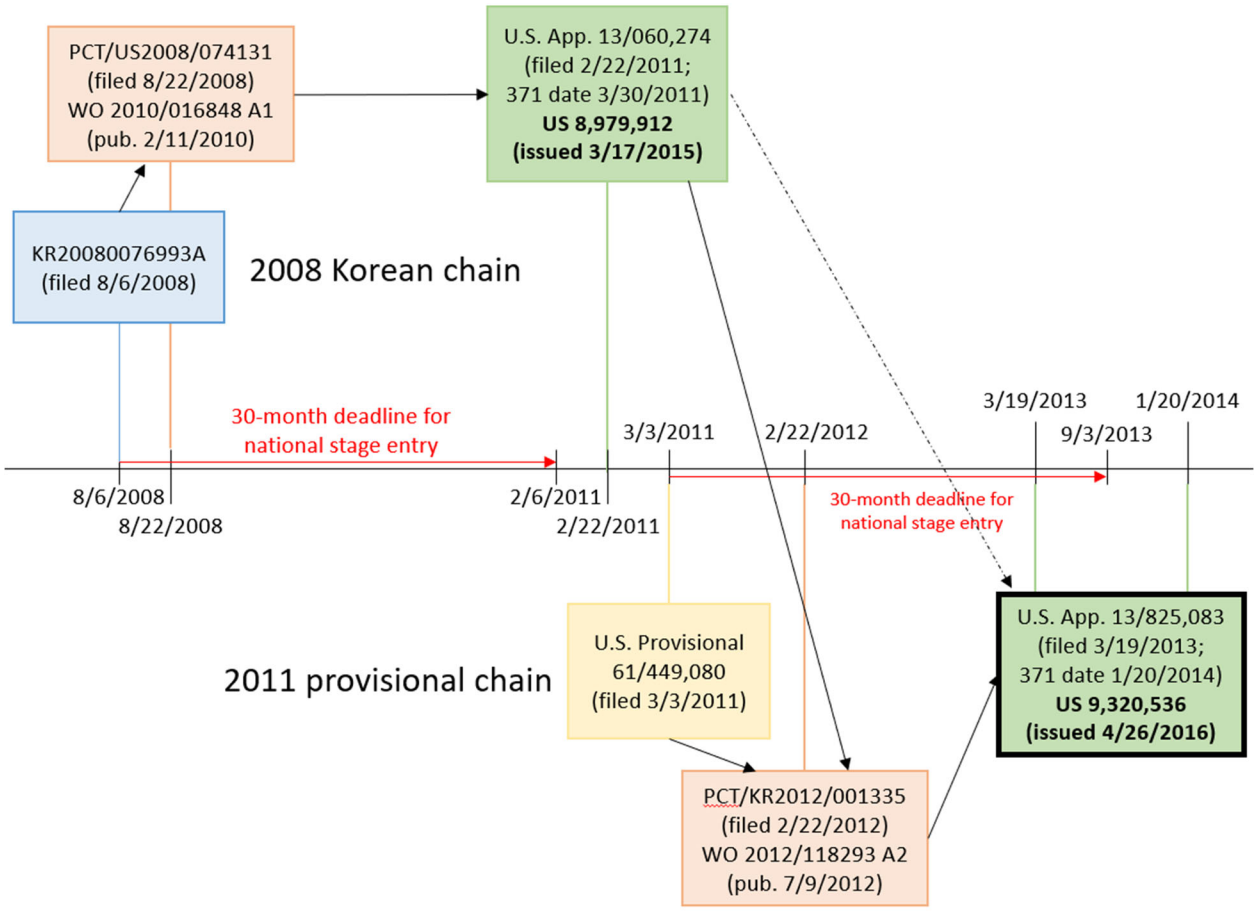

Under 35 U.S.C. §§119 and 120, a patent application may rely on the filing date of an earlier-filed application only if one or more claims have written description

[4] Petitioners note that there are irregularities in both the 2008 Korean and 2011 provisional chains that may make the priority date of the challenged claims as late as March 19, 2013. However, the references applied herein are prior art even if the priority date of the challenged claims are assumed to be the earliest filing date in the 2011 provisional chain, i.e., March 3, 2011.

support in the earlier-filed application. *Dynamic Drinkware, LLC v. Nat'l Graphics, Inc.*, 800 F.3d 1375, 1378 (Fed. Cir. 2015).

Each of the challenged claims recites "extendable needles." EX1001, Claims 1 and 11. Extendable needles are not disclosed in the 2008 Korean chain; they were first disclosed in the 2011 provisional chain. *Compare* EX1001 *with* EX1005. Nothing in the 2008 Korean chain shows the inventor possessed the "extendable needles" recited by the challenged claims. *See* EX1003, ¶42-45. For at least this reason, challenged claims 1-9 and 11-19 are not supported by the 2008 Korean chain.

V. THE PRIOR ART

The priority date of the challenged claims is assumed—for the purposes of this Petition—to be the earliest filing date in the 2011 provisional chain, i.e., March 3, 2011. The references applied herein are prior art using that priority date.

A. Mehta (EX1004)

Mehta is a U.S. patent that issued from an application filed on April 20, 2009, which is a continuation of a patent application filed on February 6, 2009. EX1004, at 1. Mehta qualifies as prior art at least under pre-AIA 35 U.S.C. § 102(e). Mehta discloses a microneedling treatment device having extendable needles, wherein energy is applied through the needles to provide percutaneous treatment of a patient's skin. EX1004, at 2:63-3:17.

B. Na ’848 (EX1005)

Na ’848 is a WIPO patent publication that published on February 11, 2010. EX1005, at 1. Na ’848 qualifies as prior art at least under pre-AIA 35 U.S.C. § 102(b). Paragraphs [0002]-[0059] and FIGS. 1-8 of Na ’848 are substantially identical to columns 1:25-2:14, columns 2:51-9:17, columns 14:5-15:14, and Figs. 1-8 of the ’536 patent.

C. Lee (EX1011)

Lee is a Korean registered utility model that published on August 25, 2008. EX1011, at 1. Lee qualifies as prior art at least under pre-AIA 35 U.S.C. § 102(b). Lee teaches a microneedling treatment device that provides “depth-controllable insertion of microneedles.” EX1011, Abstract.

D. Livneh (EX1012)

Livneh is a WIPO patent publication that published on January 10, 2008. EX1012, at 1. Livneh qualifies as prior art at least under pre-AIA 35 U.S.C. § 102(b). Livneh teaches a microneedling treatment device that include a plurality of extendable needles for applying a combination of thermal and mechanical treatment to a patient’s skin. EX1012, ¶¶ [0004]-[0008].

VI. LEVEL OF ORDINARY SKILL IN THE ART

A person of ordinary skill in the art (“POSA”) at the time of the earliest effective date for the challenged claims would have had (1) 7-10 years of

experience with developing and/or using treatment systems for delivery of electromagnetic radiation to skin or other tissues, and (2) a related graduate engineering degree or M.D. *See* EX1003, ¶50. The POSA may have worked as part of a multidisciplinary team and drawn upon not only his or her own skills, but also taken advantage of certain specialized skills of others on the team when solving a technical problem. *See id*. Additional education could substitute for professional experience and vice versa. *Id*. The Petition and evidence in support thereof demonstrate that the challenged claims would have been unpatentable from the perspective of one with any reasonable level of ordinary skill.

VII. HOW THE CHALLENGED CLAIMS ARE TO BE CONSTRUED

In an *inter partes* review, claims "shall be construed using the same claim construction standard that would be used to construe the claim in a civil action." 37 C.F.R. § 42.100. The Board gives claims their ordinary and customary meaning, as would have been understood by a POSA at the time of the invention and in the context of the entire patent disclosure. *Phillips v. AWH Corp.*, 415 F.3d 1303, 1312-13 (Fed. Cir. 2005) (en banc); 37 C.F.R. § 42.100(b). The prior art relied upon in this Petition renders the subject matter of the challenged claim unpatentable under any reasonable claim interpretation, including the plain and ordinary meaning of the recited terms. This Petition applies constructions of certain terms from the ITC action.

A. Agreed Constructions From ITC Action

Serendia and Petitioners agreed, in the ITC action, to the following constructions of "extendable needles" and "extended needles":

Plain and ordinary meaning: extendable needles: needles that can be extended [from the deployable needle assembly end surface] extended needles: needles that are extended [from the deployable needle assembly end surface]

EX1007 at 15-16; EX1003, ¶53.

Serendia and Petitioners also agreed that the preambles are limiting, that "a particular signal," as recited in claim 11 of the '536 patent, means "an electrical motor control signal," and that "predetermined intensity," as recited in claim 9 of the '536 patent, means "the electrical signal intensity selected for treatment." EX1007 at 15-16.

B. Deployable Needle Assembly End Surface

The term "deployable needle assembly end surface," which appears in the context of "a user holdable device releasably couplable deployable needle assembly end surface," in claim 1, and in the context of "a deployable needle assembly end surface," in claim 11, was construed in the ITC action as follows:

The deployable needle assembly end surface is the plane defined by the tips of the needles of the deployable needle assembly when the needles are not extended, the needle assembly can be movable within a needle module that is releasably couplable to the proximal end of a user holdable device

Id. at 16-17.

C. Separatably

The term "separatably," which appears in claims 1 and 11, was construed in the ITC action to mean "separable." *Id*. at 27.

D. Deployable Needle Assembly Mechanically Separatably from the Proximal End

The term "the deployable needle assembly mechanically separatably from the proximal end," which appears in claims 1 and 11 of the '536 patent, was construed in the ITC action as follows:

The deployable needle assembly is mechanically separable from the proximal end of the user holdable device (the deployable needle assembly can be within a needle module that mechanically separates from the proximal end of the user holdable device)

Id. at 32.

E. Draft Shaft

A POSA would have understood the term "draft shaft" in claims 3 and 13 to mean "drive shaft." EX1003, ¶63.

F. Desired Distance / Predetermined Depth

The term "a desired distance" (in claims 1 and 11) and "predetermined depth" (in claims 9 and 19) should be given their plain and ordinary meaning. The

plain and ordinary meaning of "a desired distance" simply distinguishes between needles that extend or are extendable a ***desired distance*** as opposed to an ***undesired distance***, and the plain and ordinary meaning of "predetermined depth" is a depth that is determined beforehand. EX1003, ¶56.

To the extent that Serendia contends that the plain meaning of "desired distance" specifically requires a user-settable distance of needle extension along the axis of needle extension (in an attempt to exclude: (1) needles which are extendable to a "fixed" desired distance; and (2) needles which are extendable to a desired distance based on choosing an appropriate angle of insertion), Serendia's interpretation should be rejected because it is contrary to the plain meaning of "desired distance." EX1003, ¶¶57-58.

Serendia's interpretation is also inconsistent with the use of the term "desired distance" in the claims of the '774 patent from the same patent family—which use "desired distance" in connection with fixed, non-extendable needles. *See* EX1020, cl. 1, 11. Indeed, in the ITC action, Serendia had agreed that, in the context of the term "needles one of extending or extendable a desired distance from the surface" recited by claims of the '774 patent, "needles 'extending' a desired distance from the surface covers non-extendable needles having a fixed length." *See* EX1007 at 16; *Omega Eng'g, Inc., v. Raytek Corp.*, 334 F.3d 1314, 1334 (Fed. Cir. 2003) ("We presume, unless otherwise compelled, that the same

claim term in the same patent or related patents carries the same construed meaning.”).

In any event, as discussed below, the prior art anticipates and/or renders obvious the challenged claims regardless of which interpretation of “desired distance” is applied.

VIII. DETAILED EXPLANATION OF GROUNDS FOR CHALLENGE

Pursuant to 37 C.F.R. § 42.104(b), the cited prior art anticipates and/or renders obvious the challenged claims of the ’536 patent. Mehta discloses each and every limitation of independent claims 1 and 11 (*infra* Grounds I-II) and would have been readily combinable with the Na ’848 and Livneh references (*infra* Grounds III-IV). Further, Lee—from the same field—discloses the “desired distance” limitation even under Serendia’s interpretation and is readily combinable with Mehta, Na ’848 and Livneh (*infra* Grounds V-VIII).

A. Ground I: Claims 1-3, 6, 8-9, 11-13, 16, and 18-19 are Anticipated by Mehta

Mehta anticipates claims 1-3, 6, 8-9, 11-13, 16, and 18-19 under Section 102. *See* EX1003, ¶77.

1. Independent Claim 11

For the reasons set forth *infra* Sections VIII.A.1.a. through VIII.A.1.f., Mehta anticipates claim 11. *See id*. ¶78.

(a) [11pre] An apparatus for treating dermatological tissue

Mehta discloses an apparatus for treating dermatological tissue. Mehta describes "systems" for "percutaneously delivering energy to tissue" to "produce cosmetically beneficial effects" by "shrink[ing] collagen tissue in the dermis," namely, an apparatus for treating dermatological tissue. EX1004 at 2:37-43; *see also id*. at 1:14-19, 2:58-62, 3:42-56, 7:52-59, 8:45-48; EX1003, ¶¶79-81. Therefore, Mehta discloses [11pre].

(b) [11a] a user holdable device including a proximal end and a releasably couplable deployable needle assembly, the deployable needle assembly mechanically separatably from the proximal end and including a plurality of extendable needles

Mehta discloses a user holdable device. Mehta provides a skin treatment apparatus 200 (depicted in FIG. 2A, reproduced below).

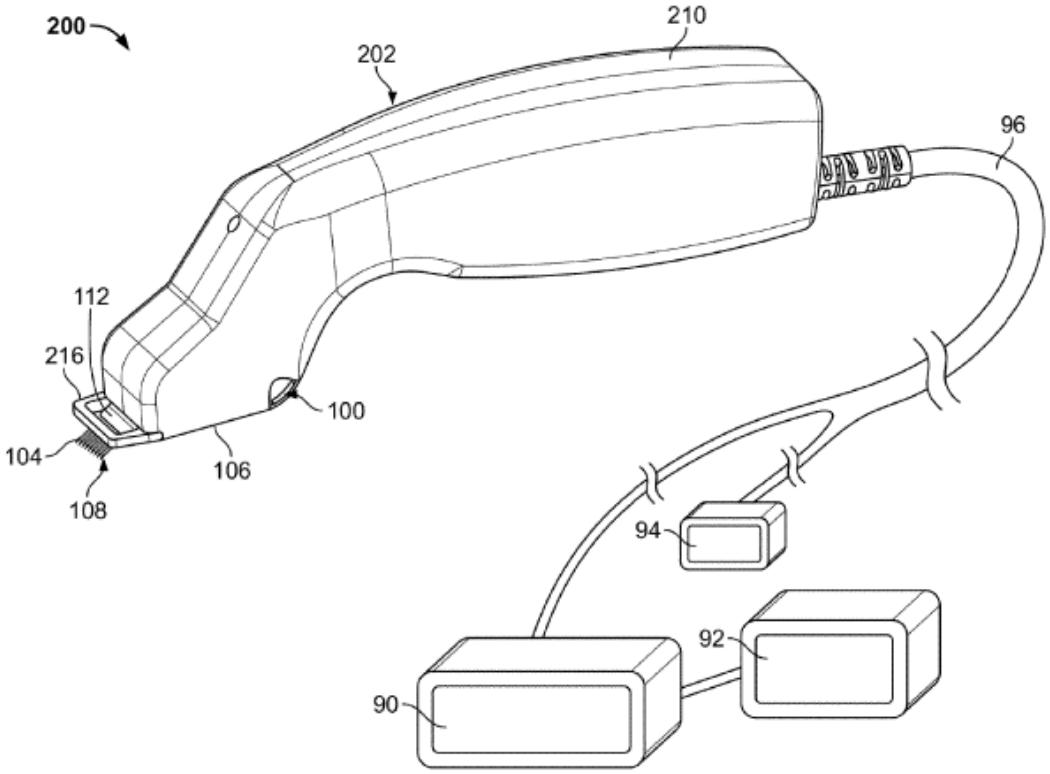

FIG. 2A

Mehta—FIG. 2A

Mehta's skin treatment apparatus 200 includes a "device 202" having a "hand-piece or device body 210," and "a plurality of retractable probes 104," i.e. needles,[5] coupled thereto "via a removable cartridge 100." EX1004 at 9:36-43, 11:9-10. The device 202 can include "a loop or curved grip that facilitates…grasp[ing] by the

[5] Mehta uses the terms "probes," "electrodes," and "needles" interchangeably (*see*, *e.g.*, EX1004 at 9:41-55; 12:47-58, 21:34-38; 31:37-41; 37:7-16), and a POSA would have understood that the "probes" and "electrodes" described and depicted in Mehta are "needles" (EX1003, ¶¶65, 85).

hand." *Id*. at 9:59-62. Accordingly, Mehta's device 202 is a user holdable device as recited by claim 11. *See* EX1003, ¶¶82-83.

Mehta discloses a proximal end. Device 202 includes a portion disposed proximal to patient tissue 10 during treatment (designated by the red box in FIG. 2B of Mehta, reproduced below). *See id*., ¶84.

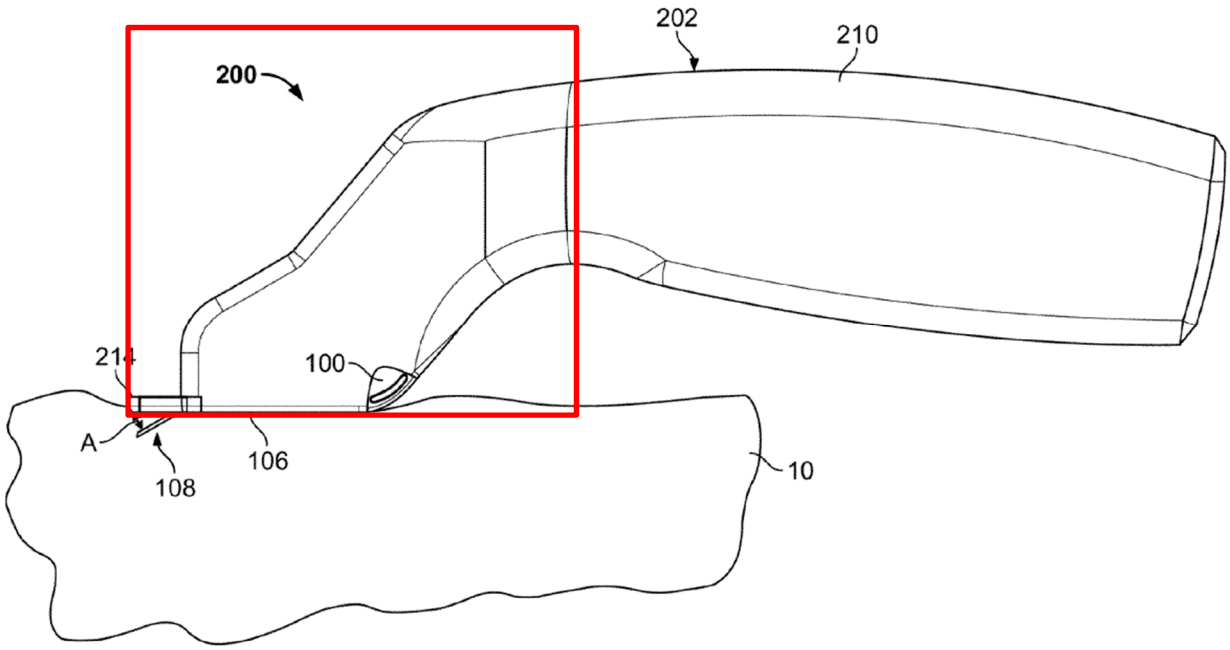

Mehta—FIG. 2B

Therefore, Mehta's device 202 includes a proximal end as recited by claim 11.

Mehta discloses a releasably couplable deployable needle assembly mechanically separable from the proximal end. FIG. 2D of Mehta (reproduced below) illustrates the device 202 "where the cartridge assembly 100 and device body 210 are separated." EX1004 at 14:5-7.

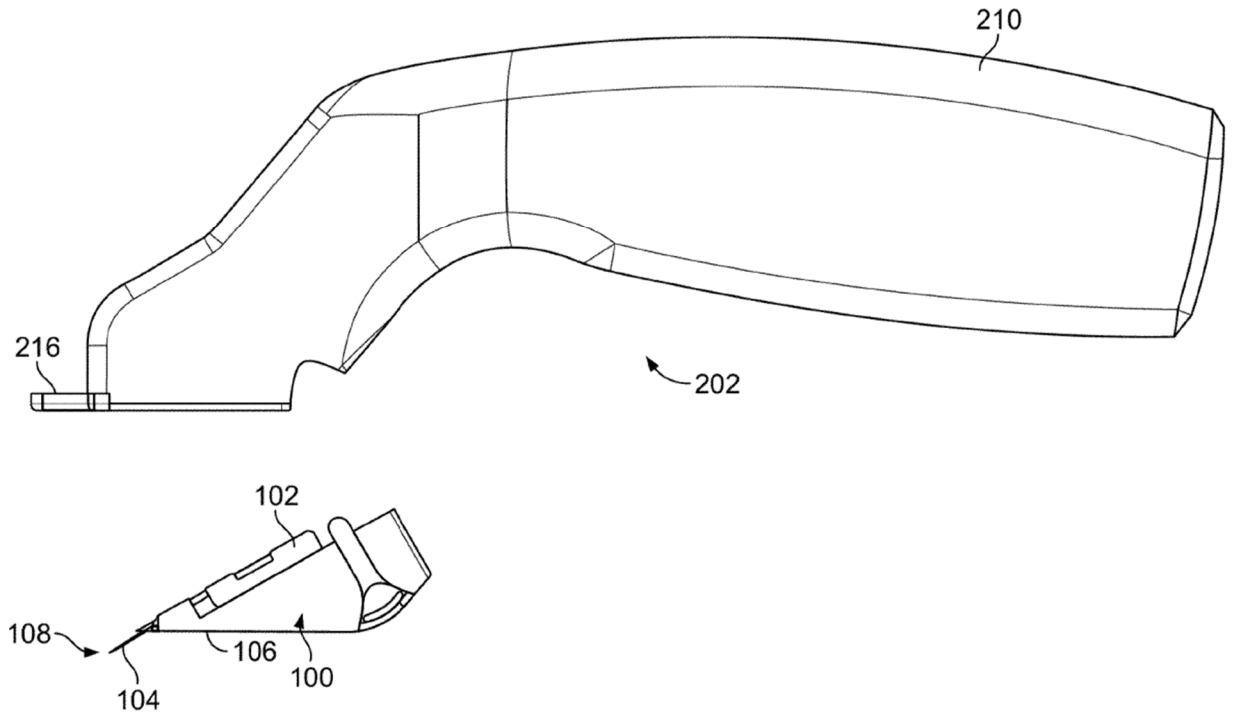

Mehta—FIG. 2D

Thus, as shown in FIG. 2D, the cartridge 100—and the needle assembly 102 provided thereon (*see id.* at 14:12-19)—are mechanically separable from the proximal end, as recited by claim 11. Mehta also teaches that "any number of structures can be incorporated into the device to permit removable coupling of the cartridge body 100," for example retention fasteners 114 that "allow[] for coupling with the device body as well as removal from the device body." *Id*. at 15:27-33. The retention fasteners are depicted in FIG. 4A of Mehta (reproduced below), which shows an example of the cartridge 100 shown in FIG. 2D.

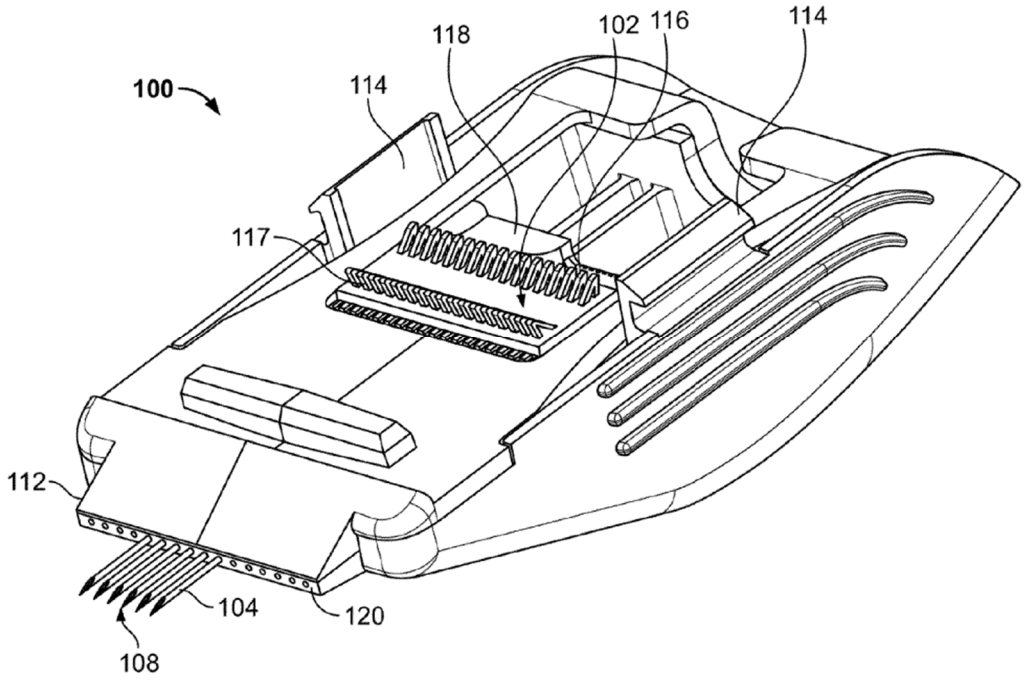

Mehta—FIG. 4A

Thus the cartridge 100—and the needle assembly 102 provided thereon—are "releasably couplable" to the proximal end because they can be coupled thereto and removed therefrom. *See*, *e.g.*, *id*. at FIGS. 2B, 2D, 4A, 6:41-42, 14:5-7, 15:27-33; EX1003, ¶¶85-86. Accordingly, the needle assembly 102 of Mehta is a releasably couplable deployable needle assembly mechanically separable from the proximal end as recited by claim 11. *See id*., ¶86.

To the extent Serendia contends that FIG. 4A is directed to a separate embodiment of Mehta relative to FIGS. 2A, 2B and/or 2D, Serendia's reading of Mehta is incorrect. *Id*. Mehta introduces Figs. 4A and 4B as "show[ing] variations of cartridge bodies for use with variations of the present system," whereby "the

present system" refers back to the "treatment system 200" depicted in FIGS. 2A-2D. EX1004 at 6:41-42, 6:51-52, 9:34-55, 14:5-19, 15:27-54. Mehta also makes clear that the disclosure regarding the "connection fastener" (mechanical connection) is meant to refer to all the variations of cartridge bodies in Figs. 2A-D, 4A and 4B. *See* EX1004 at 16:42-46 (while "FIG. 4B shows another variation of a cartridge 100," "any number of connection fastener configurations can be used with various cartridge assemblies of the present invention"). Thus, Figure 4A depicts in detail an implementation of the relatively undetailed cartridge shown in a portion of Figure 2D. They are not different embodiments. EX1003, ¶86.

Further, even if these were separate embodiments, Mehta expressly teaches that "[i]t is understood that the embodiments described above may be combined or the aspects may be combined." EX1004 at 41:35-39; *see also Blue Calypso, LLC v. Groupon, Inc.*, 815 F.3d 1331, 1344 (Fed. Cir. 2016) ("[A] reference may still anticipate if that reference teaches that the disclosed components or functionalities may be combined and one of skill in the art would be able to implement the combination.").

Mehta discloses a plurality of extendable needles. Mehta provides that needle assembly 102 includes a plurality of "extendable and retractable" (EX1004 at 15:45-48) needles 104 that "advance and retract relative to the cartridge 100"

(*id*. at 16:20-22). Accordingly, Mehta's needles 104 are a plurality of extendable needles as recited by claim 11. EX1003, ¶87.

Therefore, Mehta discloses a user holdable device (i.e. device 202) including a proximal end (i.e. of handpiece 210) and a releasably couplable deployable needle assembly (i.e. needle assembly 102), the deployable needle assembly mechanically separable from the proximal end and including a plurality of extendable needles (i.e. needles 104). *See id*., ¶88. Mehta discloses [11a].

(c) [11b] a plurality of the extendable needles extendable from a deployable needle assembly end surface

Mehta discloses a plurality of extendable needles (i.e. needles 104) extendable from a deployable needle assembly end surface. *See id*., ¶89.

Mehta's needle assembly 102 "is slidable relative to the cartridge body 100." EX1004 at 14:14-19. FIG. 4C of Mehta (reproduced below), which shows a cross-section of FIG. 4A, illustrates cartridge 100 with needle assembly 102/needles 104 in a retracted position. *See* EX1004 at 16:59-60.

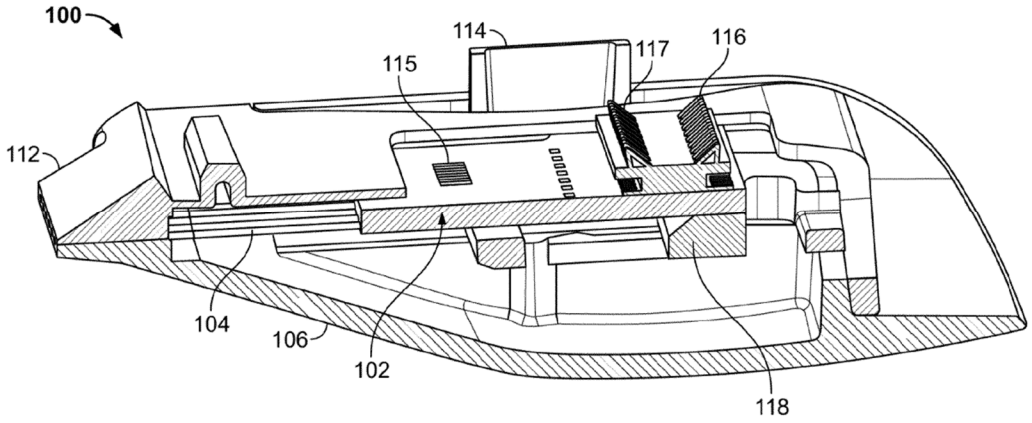

Mehta—FIG. 4C

When the needle assembly 102 is in the retracted position, the tips of the needles 104 are not extended and define a retracted tip plane, i.e. the deployable needle assembly end surface recited by claim 11. *See* EX1003, ¶¶90-91. In FIG. 4C above, that plane may correspond to the front portion 112 of the cartridge 100, or that plane may lie behind the front portion 112 of the cartridge. *Id*. FIG. 4A of Mehta (reproduced below) illustrates cartridge 100 with needle assembly 102/needles 104 in an extended position.

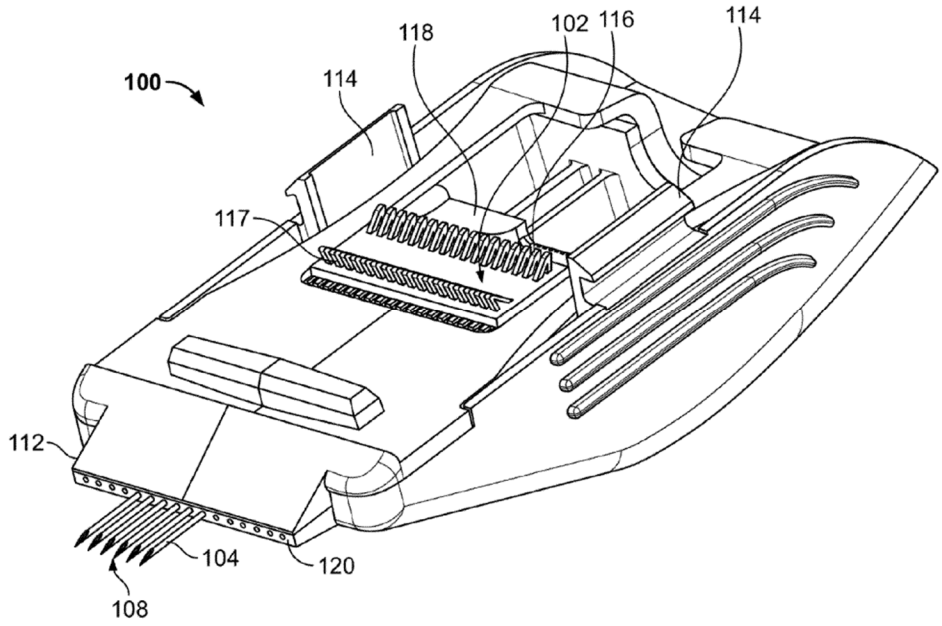

Mehta—FIG. 4A

As illustrated in FIG. 4A, when the needle assembly 102 is in the extended position, the tips of the needles 104 extend from the retracted tip plane. *See id.*, ¶92.

Accordingly, Mehta discloses a plurality of the extendable needles (i.e. needles 104) extendable from a deployable needle assembly end surface (i.e. the retracted tip plane). *See id.*, ¶93. Mehta discloses [11b].

(d) [11c] one of the proximal end and the deployable needle assembly including at least one electrical conductor and the other including at least one restorably deflectable electrical contact couplable to the one of the proximal end and the deployable needle assembly at least one electrical conductor

Mehta discloses the needle assembly including at least one restorably deflectable electrical contact. Needles 104 of needle assembly 102 have "contact

portions 116" that "comprise spring contacts or spring pins." EX1004 at 15:55-59, 16:12-18. FIG. 4A of Mehta (reproduced below) illustrates the contact portions 116.

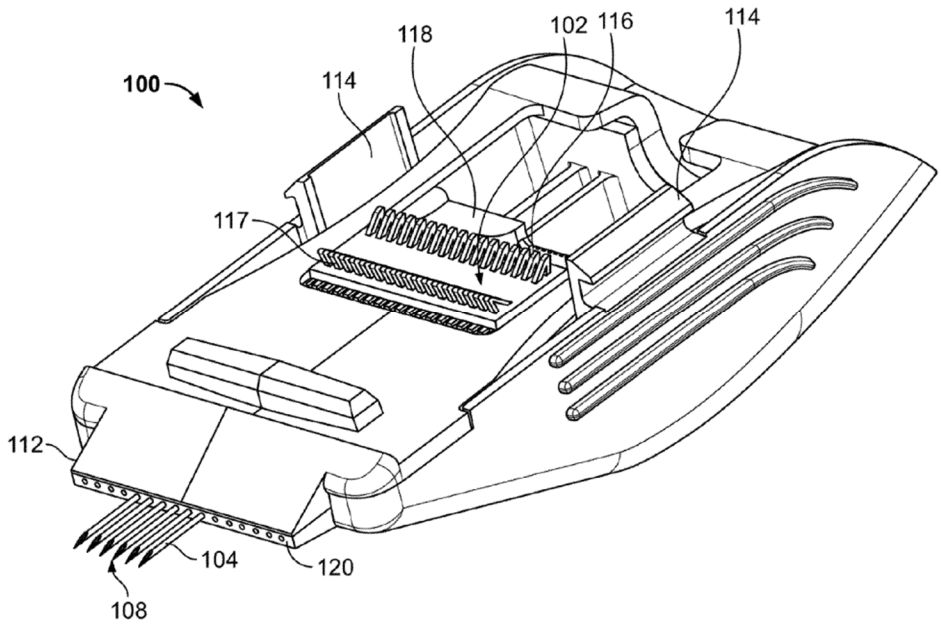

Mehta—FIG. 4A

When deformed or deflected from its original position, a spring exerts a restorative force that causes it to reassume that original position. EX1003, ¶95. Therefore, a spring contact or a spring pin is restorably deflectable. *Id*. Accordingly, each contact portion 116, in the form of a spring contact or spring pin, is a restorably deflectable electrical contact as recited by claim 11. *Id*.

Mehta discloses the proximal end including at least one electrical conductor. Mehta provides "a corresponding contact point trace on a connection board" to which the contact portions 116 "maintain contact" and "couple to" in order to

establish "an electrical pathway from the power supply" to the extendable needles 104. EX1004 at 15:55-59, 16:15-18, FIGS. 2A, 2D, 4A. Because (i) the contact portions 116 protrude from the top side of cartridge 100 and (ii) the top side of cartridge 100 interfaces with the proximal end of handpiece 210 when the cartridge 100 is coupled thereto, the contact point trace/connection board is included on the proximal end of handpiece 210. EX1003, ¶97. To the extent Mehta does not explicitly disclose that the contact point trace/connection board is included on the proximal end, it is inherent that the contact point trace/connection board is included on the proximal end and/or connected to a further electrical conductor on the proximal end. *Id*., ¶¶94, 96.

Therefore, Mehta discloses the proximal end including at least one electrical conductor (i.e. the contact point trace/connection board) and the deployable needle assembly including at least one restorably deflectable electrical contact (i.e. contact portions 116 in the form of spring contacts or spring pins) couplable to the proximal end at least one electrical conductor. *Id*., ¶¶94-98. Mehta discloses [11c].

(e) [11d] a motor coupled to a plurality of extendable needles that causes the plurality of extendable needles to extend a desired distance from the needle assembly end surface when the motor is energized with a particular signal

Mehta discloses a motor coupled to a plurality of extendable needles. *See id*., ¶99. Mehta provides "actuator 250" which "comprises a motor or drive unit that

provides sufficient force, speed or impact to the probes to drive them into tissue." EX1004 at 13:58-14:5, 15:36-40 ("stepping (via an step-motor)"). FIG. 5 of Mehta (reproduced below) illustrates actuator 250 positioned within the proximal end of the handpiece 210.

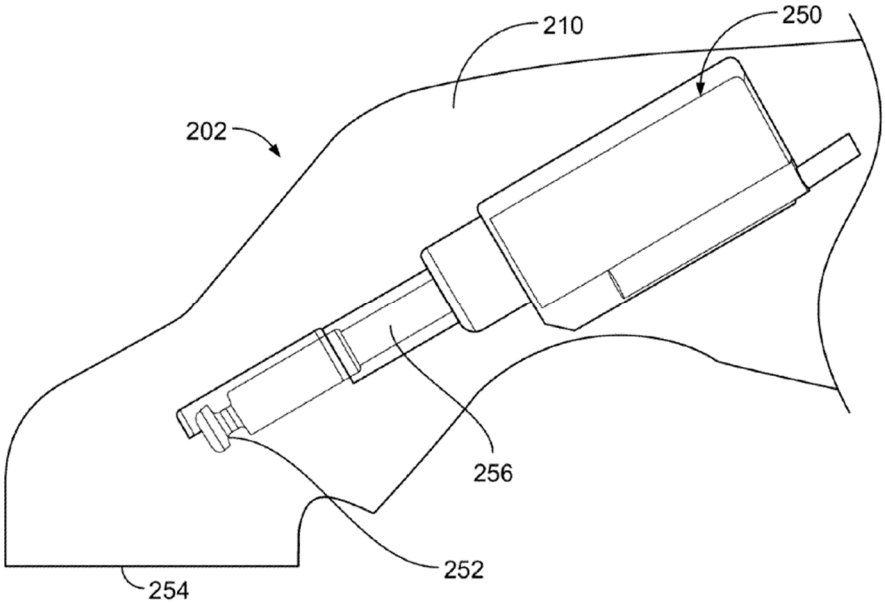

Mehta—FIG. 5

Mehta teaches that "actuator 250 moves the shaft 256 where an engagement portion 252 on the shaft couples to" the needle assembly 102 "via a coupling portion 118…to advance and retract" the needles. *Id*. at 18:26-30. FIG. 4A of Mehta (reproduced below) illustrates the coupling portion 118.

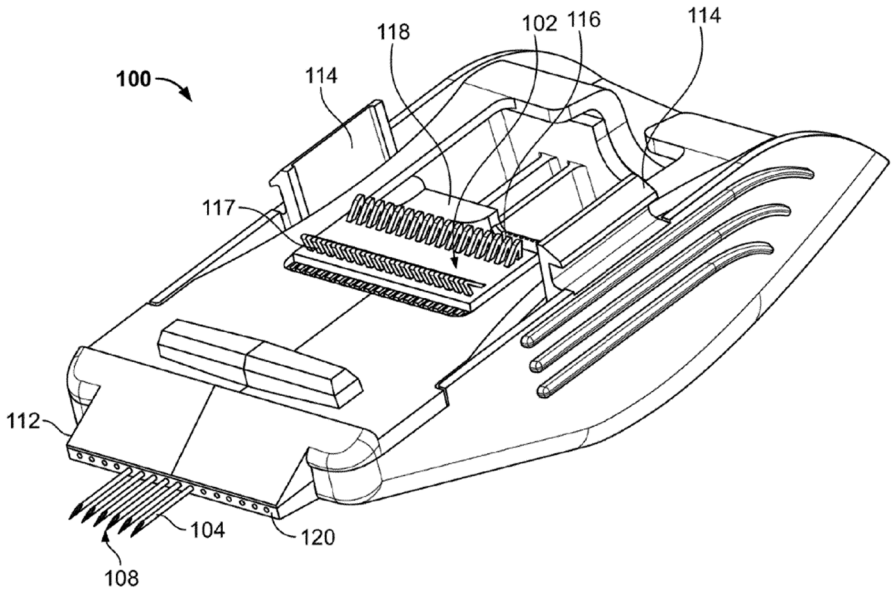

Mehta—FIG. 4A

Therefore, actuator 250 is a motor coupled to a plurality of extendable needles as recited by claim 11. *See* EX1003, ¶100.

Mehta discloses that the motor causes the plurality of extendable needles to extend a desired distance from the needle assembly end surface. Mehta teaches that the motor drives the shaft 256 to advance and retract the needles 104. *See* EX1004 at 18:26-37. When the needles 104 are advanced by the motor, they extend by a desired distance to carry out a treatment. *See* EX1003, ¶101. Mehta discloses that placement of tissue engaging surface 106 on skin causes the needles to reach "the desired depth." *See* EX1004 at 32:16-20. Mehta also provides a user interface for showing "the desired depth of placement" and avoiding placement of needles "in an undesired region." EX1004 at 32:63-33:3,33:35-43.

A desired distance includes a distance selected by a user, e.g. to correspond to a target tissue layer. *See* EX1003, ¶¶58-59, 101. Mehta discloses indicating both an actual depth of placement of the needles and a desired depth of placement for the needles to "allow[] the physician to…identify whether the array is located within the desired tissue layer" and "be informed that further advancement of the probes is necessary." EX1004 at 33:14-16, 33:24-27; *see also id*. at 13:37-45, 32:52-57, 32:67-33:3, FIGS. 10B, 10E. Mehta further discloses "guid[ing] probe placement" by "adjust[ing]" the system (EX1004 at 33:30-40), and provides a stepper motor to support such adjustments (*id*. at 15:34-42; *see also id*. at 10:33-39, and 12:5-8). *See* EX1003, ¶102, 104. Thus, Mehta teaches the "desired distance" limitation regardless of which interpretation of "desired distance," discussed above in Section VII.F., is applied. *Id.*, ¶105.

A user can also achieve a desired distance of needle extension by, e.g., selecting a cartridge having needles of a particular length and coupling that cartridge to the proximal end of handpiece 210. *See*, *e.g.*, EX1004 at 17:66-18:3, 2:47-49, 10:17-25, 14:8-12, 21:10-13, 34:25-27; EX1003, ¶¶101. To ensure that the needles extend by the desired distance, Mehta discloses "[o]ver-inserting and then partially retracting" the needles to the desired distance in order to provide "a more reliable insertion." EX1004 at 16:39-41; EX1003, ¶101. The user can additionally select a distance of needle extension by, e.g., choosing an angle A (*see*

Mehta, FIG. 2B) "between nearly 0 and 90 degrees" such that the needles 104 are inserted at "a desired location in tissue." EX1004 at 12:23-46; EX1003, ¶101.

Mehta discloses that the motor causes the needles to extend when energized with a particular signal. *See* EX1004 at 10:38-39 (describing control of actuators by control system/energy supply unit 90). In Mehta, "[t]he energy supply unit 90 may also include an input/output (I/O) device that allows the physician to input control and processing variables, to enable the controller to generate appropriate command signals." EX1004 at 12:5-8. The appropriate command signals are electrical motor control signals. *See* EX1003, ¶¶103-104. Therefore, the motor causes the needles to extend and retract when energized with a particular signal (i.e. an electrical motor control signal issued by the controller). *See id*.

Accordingly, Mehta discloses a motor (i.e. actuator 250) coupled (via shaft 256 and coupling portion 118 of needle assembly 102) to a plurality of extendable needles (i.e. needles 104) that causes the plurality of extendable needles to extend a desired distance from the needle assembly end surface when the motor is energized with a particular signal (an electrical motor control signal issued by control system/energy supply unit 90). *See id*., ¶105. Mehta discloses [11d].

(f) [11e] a signal generator electrically coupled to the plurality of extended needles to energize the plurality of extended needles

Mehta discloses a signal generator electrically coupled to the plurality of extended needles to energize the plurality of extended needles. *See id*., ¶106. Mehta's system 200 "includes an energy supply unit 90 coupled to the treatment unit 202." EX1004 at 10:53-55. FIG. 2A of Mehta, reproduced below, illustrates the energy supply unit 90.

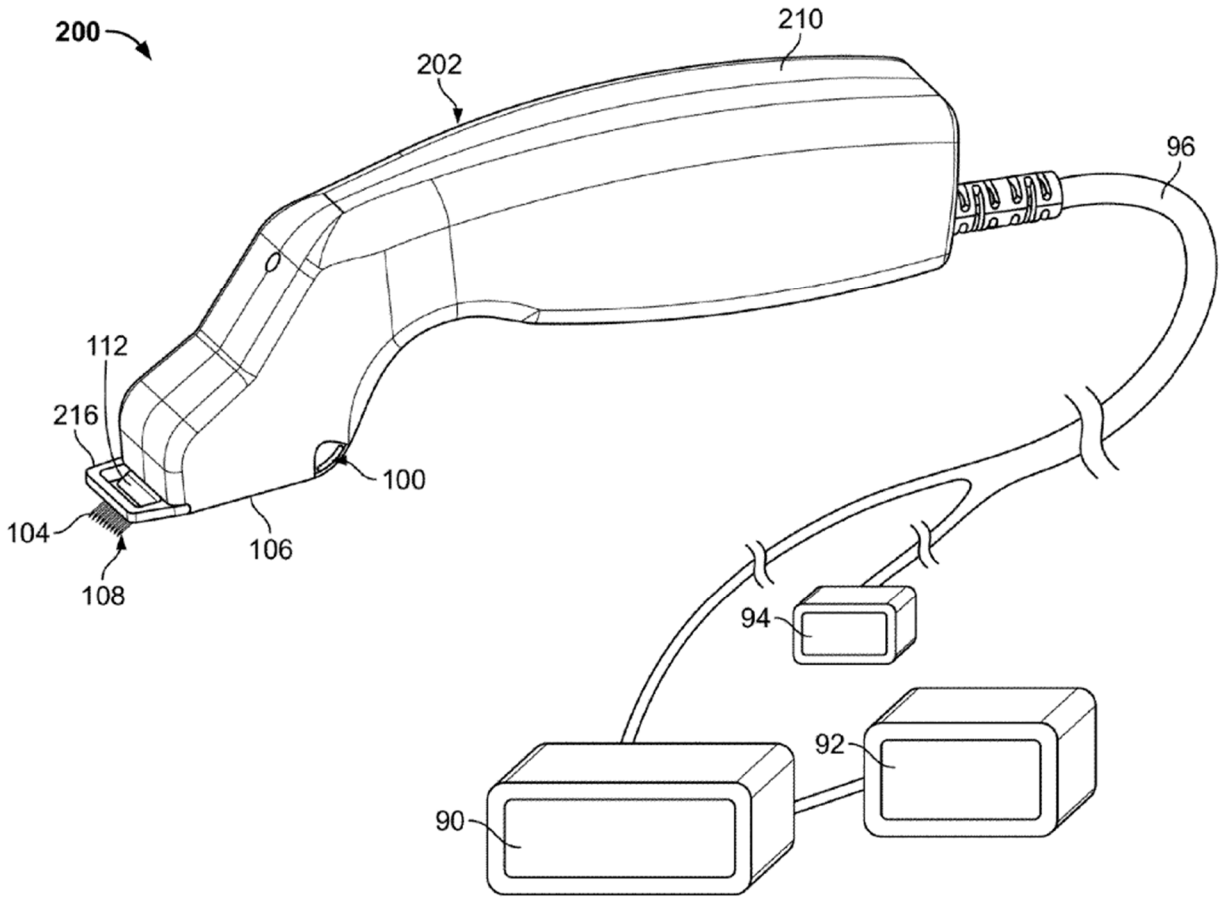

Mehta—FIG. 2A

Mehta teaches that "the energy supply unit 90 contains the software and hardware required to control energy delivery" or, alternatively, that "the CPU, software and other hardware control systems," as well as "the power supply necessary to deliver treatment," may "reside in the hand piece 210." *Id*. at 10:53-65. Because the energy is generated and delivered in the form of parameterized RF pulse signals (*see id*. at 20:13-55), Mehta's energy supply unit 90/power supply residing in handpiece 210 is a signal generator. *See* EX1003, ¶107.

Mehta teaches that the energy supply unit 90/power supply residing in handpiece 210 is electrically coupled to the needles 104 via an electrical pathway that enables energy generated by the energy supply unit 90 to be transported to and energize needles 104. *See*, *e.g.*, EX1004 at 15:55-59, 15:62-65, 16:8-11; EX1003, ¶107.

Accordingly, Mehta discloses a signal generator (i.e. energy supply unit 90/power supply residing in handpiece 210) electrically coupled to the plurality of extended needles (i.e. needles 104) to energize the plurality of extended needles *See id*, ¶108. Therefore, Mehta discloses [11e].

2. Dependent Claim 12

Claim 12 recites the apparatus of claim 11, "wherein the device proximal end includes an electrical connector couplable to the signal generator." Mehta discloses this additional element.

As discussed *supra* (Section VIII.A.1.d.), Mehta discloses at least one electrical conductor in the proximal end of the handpiece 210 to which one or more of the contact portions 116 of the needles 104 are couplable. As also discussed *supra* Section VIII.A.1.f., Mehta discloses an electrical pathway from the signal generator to the needles 104 that allows the needles to be energized to deliver treatment. Such electrical pathway runs through the proximal end of the handpiece 210 and includes an electrical connector in the proximal end that is couplable to the signal generator. *See* EX1003, ¶112. To the extent that Mehta does not explicitly disclose such an electrical connector, said electrical connector is inherently present in Mehta. *Id*., ¶¶109-113.

Therefore, Mehta anticipates claim 12.

3. Dependent Claim 13

Claim 13 recites the apparatus of claim 11, "wherein the proximal end includes the needle deploying motor, the motor including a draft shaft releasably couplable to the deployable needle assembly." Mehta discloses this additional element.

As discussed *supra* Section VIII.A.1.e., Mehta discloses a proximal end of the handpiece 210, illustrated in FIG. 5 of Mehta (reproduced below), including a motor (i.e. actuator 250) with shaft 256.

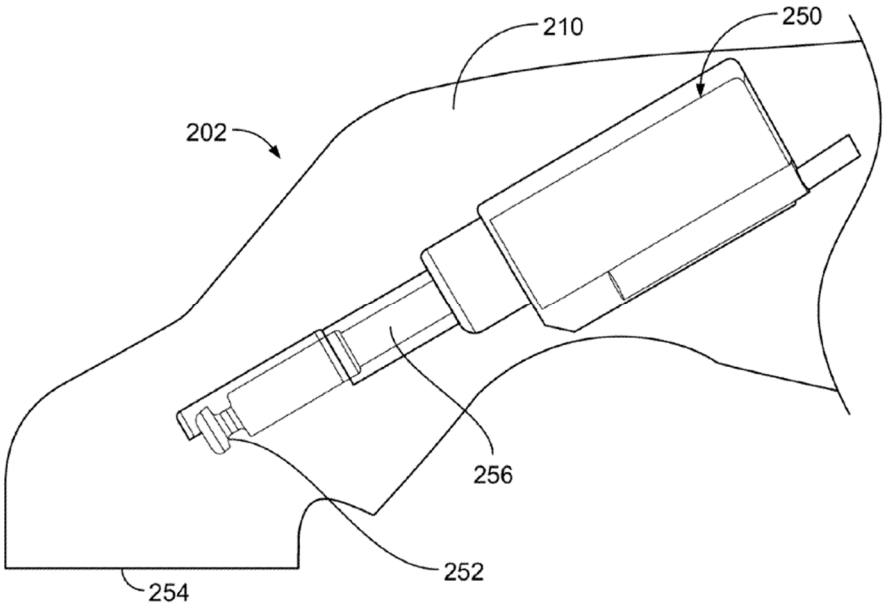

Mehta—FIG. 5

The shaft 256 is releasably couplable to the deployable needle assembly. *Supra* Section VIII.A.1.e.; EX1003, ¶115. Accordingly, Mehta anticipates claim 13. *See id*., ¶¶114-116.

4. Dependent Claim 16

Claim 16 recites the apparatus of claim 11, "wherein at least one restorably deflectable electrical contact includes a depressible pin." Mehta discloses this additional element of claim 16.

As discussed *supra* Section VIII.A.1.e., Mehta discloses at least one restorably deflectable electrical contact (i.e. contact portions 116 in the form of spring contacts or spring pins). A spring pin is a "depressible pin," as recited by claim 16. *See* EX1003, ¶118. Accordingly, Mehta anticipates claim 16.

5. Dependent Claim 18

Claim 18 recites the apparatus of claim 11, "wherein the signal generator energizes the plurality of extended needles with energy to one of cut, blend, or coagulate dermatological tissue." Mehta discloses this additional element.

As discussed *supra* Section VIII.A.1.f., Mehta discloses a signal generator (i.e. energy supply unit 90/power supply residing in handpiece 210) electrically coupled to the plurality of extended needles (i.e. needles 104) to energize the plurality of extended needles. Mehta teaches that the needles "can employ an RF energy mode to denature or *coagulate* collagen in a dermal layer." EX1004 at 24:46-47 (emphasis added); *see also id*. at 37:25-34, 39:9-41; EX1003, ¶¶119-120. Therefore, Mehta anticipates claim 18.

6. Dependent Claim 19

Claim 19 recites that the apparatus of claim 11 further includes "the motor deploying the plurality of extendable needles to a predetermined depth and the signal generator energizing the plurality of extended needles to a predetermined intensity for a predetermined duty cycle." Mehta discloses this additional element.

As discussed *supra* Section VIII.A.1.e., Mehta discloses a motor (i.e. actuator 250) that causes the plurality of extendable needles (i.e. needles 104) to extend a desired distance from the needle assembly end surface. Causing the

extendable needles to extend a desired distance deploys them to a predetermined depth in a patient's tissue. *See* EX1003, ¶123.

As further discussed *supra* Section VIII.A.1.f., Mehta discloses a signal generator (i.e. energy supply unit 90/power supply residing in handpiece 210) electrically coupled to the plurality of extended needles (i.e. needles 104). When energizing needles 104, Mehta teaches that (i) "the duty cycle of variations of the present system can be pulsed so that temperature measurements can be taken between the pulsed deliveries of energy" (EX1004 at 20:21-24), (ii) "[e]ach pulse has a parameter, including…duration, … , amplitude, frequency, etc." (*id*. at 20:31-35), and (iii) "[t]he controller compares the measured temperature to a desired temperature," and "[b]ased on the difference, the energy parameters are adjusted for the subsequent energy pulse" (*id*. at 20:39-42). Accordingly, Mehta teaches determining pulse parameters—including duration (which corresponds to duty cycle) and amplitude (which corresponds to intensity)—prior to providing a pulse and then determining modified pulse parameters prior to providing a subsequent pulse. *See* EX1003, ¶¶124-126. Mehta also discloses predetermination of treatment parameters, such as intensity and duty cycle, through user selection or adjustment. *See* EX1004 at 35:8-22 (physician adjustment of treatment settings); 37:35-41 (adjusting time-at-temperature); 3:40-41 (adjusting parameters of energy supply unit); EX1003, ¶126. Therefore, Mehta anticipates claim 19.

7. Independent Claim 1

For the reasons set forth *infra* Sections VIII.A.7.a. through VIII.A.7.h., Mehta anticipates claim 1. *See* EX1003, ¶127.

(a) [1pre] A method of treating dermatological tissue, comprising:

Mehta provides "methods of percutaneously delivering energy to tissue" to "produce cosmetically beneficial effects of using energy to shrink collagen tissue in the dermis," namely, a method for treating dermatological tissue. EX1004 at 2:37-43. Therefore, Mehta discloses [1pre]. *Supra* Section VIII.A.1.a.; EX1003, ¶¶128-130.

(b) [1a] placing a user holdable device releasably couplable deployable needle assembly end surface on or near dermatological tissue to be treated,

Mehta discloses [1a]. As discussed *supra* Section VIII.A.1.c., Mehta discloses a user holdable device releasably couplable deployable needle assembly end surface, i.e. the retracted tip plane. Using Mehta's skin treatment apparatus 200 involves placing the front portion 112, which corresponds to or lies in front of the retracted tip plane, of the cartridge 100 on or near dermatological tissue to be treated. *See* EX1003, ¶¶131-132. FIG. 7A of Mehta, reproduced below, illustrates the front portion 112 of the cartridge positioned, during treatment, near dermatological tissue.

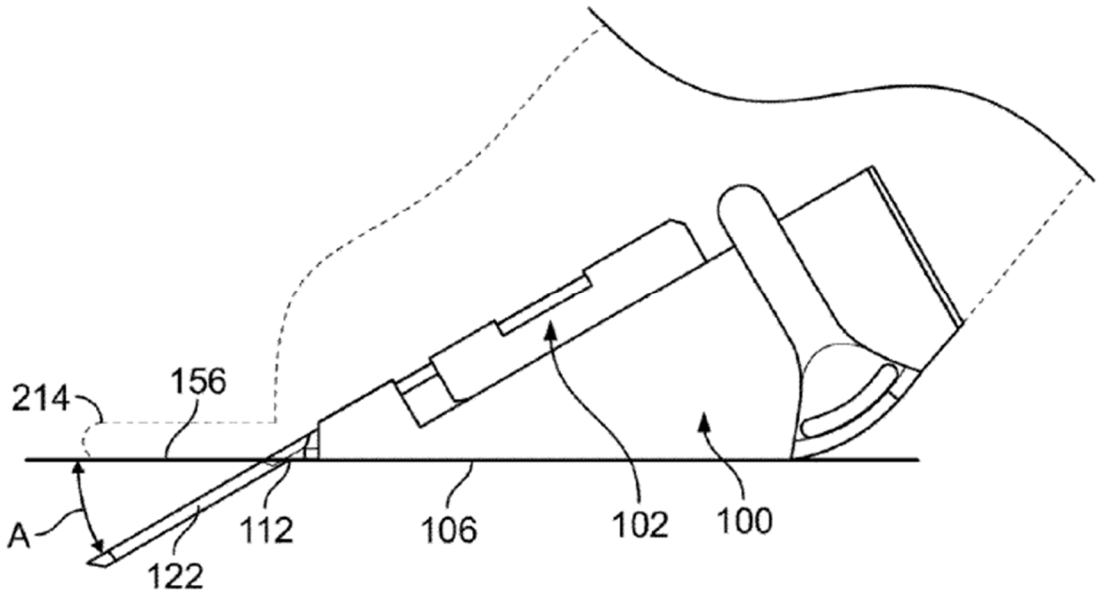

Mehta—FIG. 7A

Therefore, Mehta discloses [1a].

(c) [1b] the holdable device including a proximal end and the releasably couplable deployable needle assembly,

Mehta discloses [1b]. *Supra* Section VIII.A.1.b.

(d) [1c] the deployable needle assembly mechanically separatably from the proximal end and including a plurality of needles extendable from the deployable needle assembly end surface,

Mehta discloses [1c]. *Supra* Sections VIII.A.1.b. and VIII.A.1.c.

(e) [1d] one of the proximal end and the deployable needle assembly including at least one electrical conductor and the other including at least one restorably deflectable electrical contact couplable to the one of the proximal end and the deployable needle assembly at least one electrical conductor;

Mehta discloses [1d]. *Supra* Section VIII.A.1.d.

(f) [1e] communicating electrical signals from the proximal end to the plurality of the extendable needles;

Mehta discloses [1e]. As discussed *supra* Section VIII.A.1.e., Mehta discloses an electrical pathway between a signal generator and the needles 104. The electrical pathway includes at least one electrical conductor in the proximal end of the handpiece 210 to which one or more of the contact portions 116 of the needles 104 are couplable. In addition to being energized to deliver treatment (*supra* Section VIII.A.1.f.), Mehta's needles 104 measure parameters of the patient's tissue and communicate said measurements to a controller of the treatment system. *See* EX1004 at 5:26-48,20:48-55, 24:5-26, 25:24-30, 31:37-32:15. Obtaining tissue parameter measurements, via the needles 104, involves communicating electrical signals from the proximal end to the plurality of needles 104. *See* EX1003, ¶¶136-137.

For example, Mehta teaches that a needle "can have multiple connection portions 116, 117," and "in one possible variation…connection portion 116 can electrically couple to a temperature detecting circuit on the hand unit" while "connection portion 117 can connect to a power delivery circuit." EX1004 at 16:62-17:8. Connection portions 116 and 117 are depicted in FIG. 4A of Mehta (reproduced below).

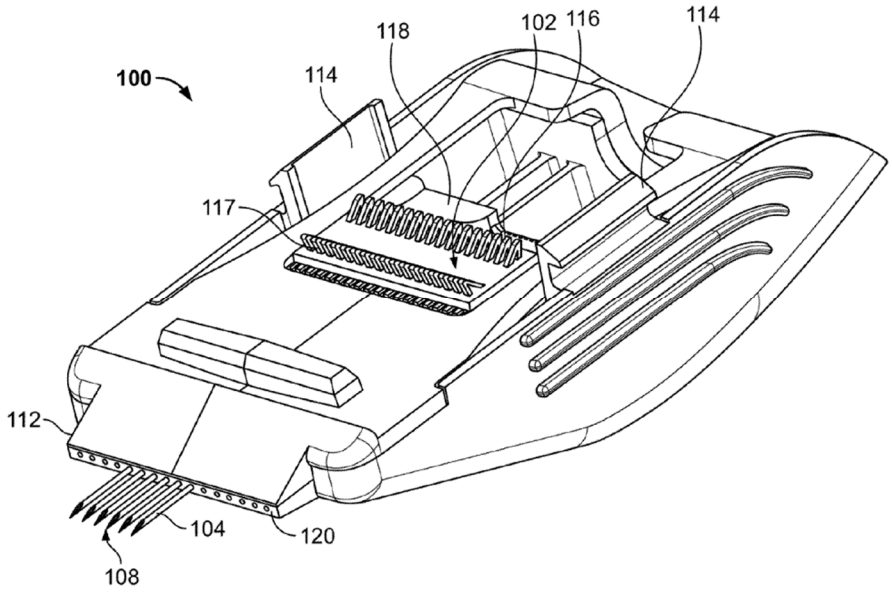

Mehta—FIG. 4A

Mehta additionally teaches that "[i]n such an example, the temperature of the [needles] can be continuously monitored." EX1004 at 17:8-11. Continuously monitoring the temperature of the needles—via an electrical coupling of the proximal connection portion 116 to a temperature detecting circuit on the hand unit (i.e. the handpiece 210)—involves communicating electrical signals from the proximal end of the handpiece 210 to the plurality of the extendable needles (via the proximal connection portion 116 of the extendable needles 104). *See* EX1003, ¶136. Therefore, Mehta discloses [1e].

(g) [1f] energizing a motor coupled to a plurality of extendable needles to cause a plurality of the extendable needles to extend a desired distance from the needle assembly end surface; and

Mehta discloses [1f]. *Supra* Section VIII.A.1.f.

(h) [1g] energizing the plurality of extended needles via a signal generator electrically coupled to the plurality of extended needles.

Mehta discloses [1g]. *Supra* Section VIII.A.1.g.

8. Dependent Claim 2

Claim 2 recites that the method of claim 1 further includes "placing a dermatological chemical one of on at least a portion of the dermatological tissue, at least a portion of the end surface, and the plurality of the extendable needles." Mehta discloses this additional element. *See* EX1003, ¶141.

Mehta discloses "the use of additives, medicines, bioactive substances, or other substances intended to create a therapeutic effect on their own or augment a therapeutic effect created by any one of the energy modalities discussed herein." EX1004 at 9:7-11. As a specific example, Mehta discloses "anesthetic or numbing agents can be delivered to reduce the patient's sensation of pain" by being "applied on the epidermal layer" or "injected into the dermal layer of the skin." EX1004 at 9:19-22. Therefore, Mehta anticipates claim 2. *See* EX1003, ¶142.

9. Dependent Claim 3

Mehta anticipates claim 3. *Supra* Section VIII.A.3.; EX1003, ¶143.

10. Dependent Claim 6

Mehta anticipates claim 6. *Supra* Section VIII.A.4.; EX1003, ¶144.

11. Dependent Claim 8

Mehta anticipates claim 8. *Supra* Section VIII.A.5.; EX1003, ¶145.

12. Dependent Claim 9

Mehta anticipates claim 9. *Supra* Section VIII.A.6.; EX1003, ¶146.

B. Ground II: Claims 1-9 and 11-19 are Obvious over Mehta in view of the knowledge of a POSA

Claims 1-9 and 11-19 would have been obvious to a POSA under Section 103 in view of Mehta and the knowledge of a POSA. *See* EX1003, ¶147.

1. Independent Claims 1 and 11

(a) Independent Claim 11

As discussed *supra* Section VIII.A.1., Mehta discloses elements [11pre], [11a], [11b], [11c], [11d], and [11e]. To the extent Serendia contends that one or more of those features is not disclosed, either explicitly or inherently by Mehta, it would have been obvious to a POSA to modify Mehta to realize those one or more features. *See* EX1004 at 6:3-6; EX1003, ¶¶149-150.

With respect to element [11d], even if Serendia's narrow interpretation of "desired distance" were to be adopted, independent claim 11 would have been obvious over Mehta and the knowledge of a POSA. *See id*., ¶151.

As discussed *supra* Section VIII.A.1.e., Mehta discloses a motor (i.e. actuator 250) coupled (via shaft 256 and coupling portion 118 of needle assembly 102) to a plurality of extendable needles (i.e. needles 104) that causes the plurality of extendable needles to extend a distance from the needle assembly end surface when the motor is energized with a particular signal (i.e. an electrical motor control signal from control system/energy supply unit 90). To the extent Mehta does not explicitly disclose a user-settable distance of needle extension along the axis of needle extension, it would have been obvious to a POSA to modify Mehta to allow a user to select a distance of needle extension from the needle assembly end surface. *See* EX1003, ¶151.

Mehta discloses a motor capable of providing a user-settable distance of needle extension, i.e. a "step-motor." EX1004 at 15:36-40. A POSA would have understood that a step-motor would move the needles 104 from a fully retracted position, through a plurality of discrete, intermediate steps (of ~100µm/0.1mm), to a fully extended position. *See* EX1003, ¶¶152-154. A POSA would further have understood that a step-motor could be controlled to move to a particular intermediate step corresponding to a user-specified distance from the fully retracted position. *See id.*, ¶155.

In addition, Mehta discloses a user interface via which a user could provide input to select a distance of needle extension. Mehta teaches that "[t]he energy

supply unit 90 may also include an input/output (I/O) device that allows the physician to input control and processing variables, to enable the controller to generate appropriate command signals" (EX1004 at 12:5-8) and that the motor is "driven by the control system/energy supply unit 90" (*id*.).

To the extent that Mehta does not explicitly disclose a user-settable distance of needle extension along the axis of needle extension, it would have been obvious to a POSA to modify Mehta to provide for such control. *See* EX1003, ¶¶155-161. One motivation would be to enable a physician to precisely control needle deployment depth and thereby achieve superior treatment outcomes. *See id*. Mehta, for example, teaches that "precisely determine[ing] depth of placement" of the needles "allowed tunable dosimetry permitting controlled delivery of a specific thermal coagulation profile at a particular depth in the dermis" and "ensured adequate sparing of normal tissue." EX1004 at 39:33-41. Mehta also teaches that "precision over depth control was made possible" by "detect[ing] the layer of skin in which the needles were deployed," such that "real-time information" can be provided "to the physician…to confirm proper needle deployment and needle depth." *Id*. at 37:7-11, 39:36.

Further motivations would have been to streamline treatment, improve the patient's experience, and decrease treatment costs by allowing a physician to treat various regions of a patient's skin with a single cartridge. *See* EX1003, ¶158. An

additional motivation would be to facilitate compound treatments that target different layers of the skin—such as those taught by Mehta (*see* EX1004 at 35:61-36:1, 9:22-25)—by enabling a physician to move the needles from a first depth corresponding to a first layer of the skin to a second depth corresponding to a second layer of the skin. *See* EX1003, ¶160.

A POSA would have understood that there was a high likelihood of success in modifying Mehta to provide a user-settable distance of needle extension, as the modifications would amount to nothing more than operating a known component (a step-motor) according to its established function. *See* EX1003, ¶162. A POSA would only have needed to perform routine programming to (i) provide a distance setting on Mehta's I/O interface (*see* EX1004 at 10:38-39) for selecting a needle extension distance and (ii) configure Mehta's control system/energy supply unit 90 (*see* EX1004 at 12:5-8), to convert the user-selected needle extension distance to a control signal (e.g. a pulse train for a step-motor). *See* EX1003, ¶162. Mehta already discloses an I/O interface "that allows the physician to input control and processing variables, to enable the controller to generate appropriate command signals" (EX1004 at 12:5-8), and adding a parameter to the I/O interface and generating a corresponding command signal were well within the capabilities of a POSA. *See* EX1003, ¶162.

Accordingly, independent claim 11 would have been obvious over Mehta and the knowledge of a POSA.

(b) Independent Claim 1

As discussed *supra* Section VIII.A.7., Mehta discloses elements [1pre], [1a], [1b], [1c], [1d], [1e], [1f], and [1g]. To the extent Serendia contends that one or more of those features is not disclosed, either explicitly or inherently by Mehta, it would have been obvious to a POSA to modify Mehta to realize those one or more features. *See* EX1004 at 6:3-6; EX1003, ¶163.

With respect to element [1f], if Serendia's proposed interpretation of "desired distance" were to be adopted, independent claim 1 would have at least been obvious over Mehta in view of the knowledge of a POSA. *Supra* Sections VIII.A.7. and VIII.B.1.a.; EX1003, ¶164.

2. Dependent Claims 2-3, 6, 8-9, 12-13, 16, and 18-19

As discussed *supra* Sections VIII.A.2.-VIII.A.6. and VIII.A.8.-VIII.A.12., Mehta discloses the features recited by claims 2-3, 6, 8-9, 12-13, 16, and 18-19. To the extent Serendia contends that one or more of those features is not disclosed, either explicitly or inherently by Mehta, it would have been obvious to a POSA to modify Mehta to realize those one or more features. *See* EX1004 at 6:3-6; EX1003, ¶¶165-167. Accordingly, dependent claims 2-3, 6, 8-9, 12-13, 16, and 18-19 are obvious over Mehta in view of the knowledge of a POSA.

3. Dependent Claims 4-5 and 14-15

Claim 14 recites the apparatus of claim 11, "wherein the proximal end further includes at least one embedded LED therein and the apparatus further including a photonic signal generator electrically coupled to the least one embedded LED, the at least one embedded LED illuminating the deployable needle assembly when energized." Claim 4 recites the method of claim 1, "wherein the proximal end further includes at least one embedded LED therein and further including energizing the LED when the signal generator is energized, the at least one embedded LED illuminating the deployable needle assembly when energized." It would have been obvious, in view of the knowledge of a POSA, to provide those additional elements in the apparatus and method of Mehta.

Mehta discloses light sources at the proximal end of handpiece 210 and a photonic signal generator electrically coupled to the light sources at the proximal end of handpiece 210. Mehta discloses that "radiant energy may be supplied by the energy source/supply 90 that is coupled to a diode, fiber, or other emitter at the…end of the treatment unit" and further discloses that "the energy source/supply 94 and associated energy transfer element may comprise laser, light, or other similar types of radiant energy (e.g., visible, ultra-violet, or infrared light)." EX1004 at 11:24-33; EX1003, ¶170.

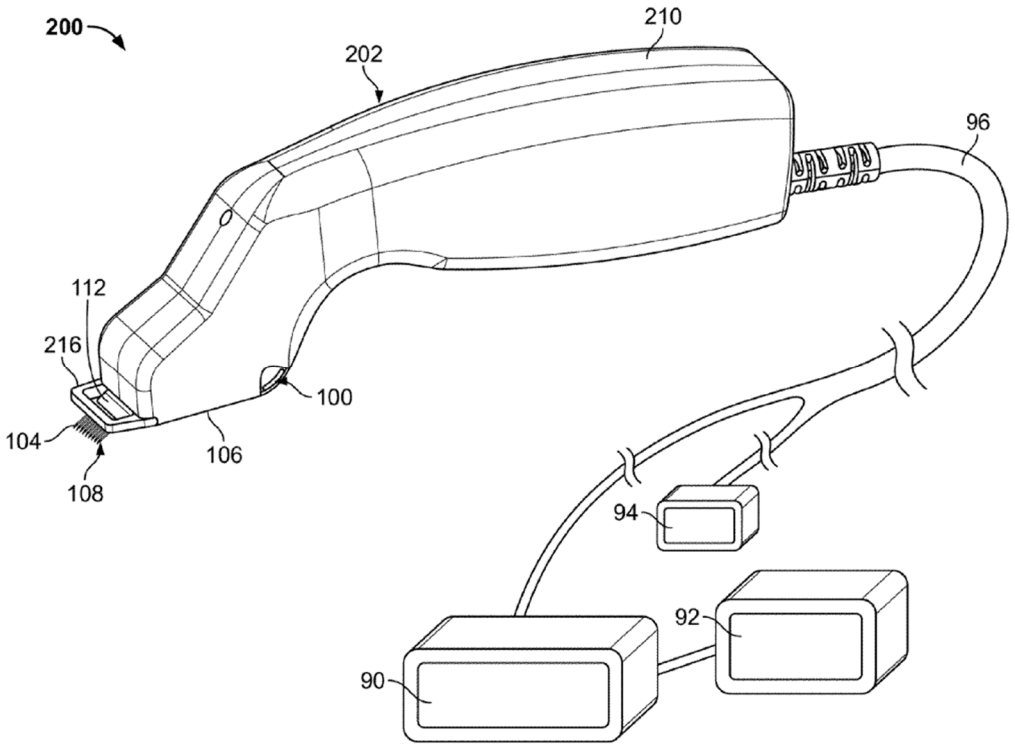

Mehta—FIG. 2A

Accordingly, Mehta discloses that the proximal end further includes at least one light source (i.e. the emitter/energy transfer element), and the apparatus further including a photonic signal generator (i.e. the energy source/supply 90 or 94).

To the extent Mehta does not explicitly disclose LEDs, it would have been obvious to use LEDs for Mehta's light sources. *See* EX1003, ¶¶168-170. LEDs were, as of the effective date of the '536 patent, well-known light sources that a POSA would have understood to be highly energy efficient, low cost, and readily available. *See id*., ¶170. The use of LEDs in medical devices for the treatment of skin was also well known. *See, e.g.*, EX1018, ¶¶287-288, EX1019, ¶¶86, 90, 94; EX1003, ¶¶34-36. A POSA would have been motivated to utilize LEDs for the

light sources at the proximal end of Mehta's handpiece 210, e.g. to provide cost-effective illumination, and doing so would have been a matter of routine engineering. *See* EX1003, ¶¶171-173.

Embedding LEDs in a handpiece 210 was well known, and embedding LEDs in the proximal end of Mehta's handpiece 210 would have been an obvious design choice. *See, e.g.*, EX1019, ¶¶86, 94; EX1003, ¶172. A POSA would have been motivated to embed the LEDs to provide a visually appealing product (to both physicians, i.e. customers, and patients) with a sleek outer profile, and doing so would have been a matter of routine engineering. *See id*.

It would have been obvious to a POSA to control Mehta's photonic signal generator to energize the LEDs and thereby illuminate the needles 104—which are part of needle assembly 102. The motivation to illuminate the needles 104/needle assembly 102 would have been to assist a physician in confirming the intended treatment area (*see* EX1004 at 13:20-36), or to illuminate depth markings or other distinguishing features of the needles (*see* EX1004 at 13:37-45). *See* EX1003, ¶171. Controlling the photonic signal generator to illuminate the needles 104/needle assembly 102, e.g. by providing software and hardware capable of supplying power from the photonic signal generator to the LEDs to energize the LEDs, would have been a matter of routine engineering. *See id*.

Furthermore, it would have been obvious to a POSA to control Mehta's photonic signal generator to energize the LEDs and thereby illuminate the needles 104/needle assembly 102 when the needles 104 are energized by the signal generator. *See id*. It was well known to use to LEDs to provide a visual indication of the operational status of medical devices for treating skin. S*ee*, *e.g.*, EX1014 at 4 (describing that an LED "emits a predetermined color at the same time as the high frequency is applied"); EX1003, ¶¶35-36, 171. The motivation to illuminate the needles 104/needle assembly 102 when the needles 104 are energized would have been to provide a visual indication of the RF energy emitted by the needles 104, which would decrease the risk that the clinician would unintentionally apply energy to a patient's skin. *See* EX1003, ¶171.

Accordingly, dependent claims 4 and 14 of the '536 patent are obvious over Mehta in view of the knowledge of a POSA.

Claim 15 recites the apparatus of claim 14, "wherein the releasably couplable deployable needle assembly includes a translucent section that communicates illumination from the least one embedded LED to the plurality of extendable needles." Claim 5 recites the method of claim 4, "wherein the releasably couplable deployable needle assembly includes a translucent section to communicate illumination from the least one embedded LED to the plurality of extendable needles."

It would have been obvious, in view of the knowledge of a POSA, to provide the additional elements of claims 5 and 15 in the method and apparatus of Mehta.

Mehta discloses that portions of the treatment device 202 are translucent. *See* EX1004 at 22:65-23:10. It would have been obvious to a POSA to provide at least a section of the needle assembly 102 from translucent material (as opposed to from an opaque material) in order to allow the light emitted by the embedded LEDs to be communicated to the plurality of needles 104. *See* EX1003, ¶¶176-178. Providing at least a section of the needle assembly 102 from translucent material would have been an obvious matter of design choice. The motivation for using translucent material would have been to (i) prevent an opaque material from shading the tissue to be treated from illumination and (ii) further enhance the visual appearance of the device 202 by utilizing a material that would provide for diffuse reflection and transmission of the illuminating light provided by the LED and thereby create a visually-appealing glow. *See id.*, ¶177. Furthermore, using translucent material to form at least a section of the needle assembly 102 would have been a matter of routine engineering because a number of suitable translucent materials were available as of the priority date of the challenged claims. *See id*.

Accordingly, dependent claims 5 and 15 of the ’536 patent are obvious over Mehta in view of the knowledge of a POSA.

4. Dependent Claims 7 and 17

Dependent claim 17 recites the apparatus of claim 11, "wherein a first deflectable electrical contact is coupled to a first plurality of the plurality of extendable needles and a second deflectable electrical contact is coupled to a second, different plurality of the plurality of extendable needles." Dependent claim 7 recites the method of claim 1, "wherein a first deflectable electrical contact is coupled to a first plurality of the plurality of extendable needles and a second deflectable electrical contact is coupled to a second, different plurality of the plurality of extendable needles."

It would have been obvious, in view of the knowledge of a POSA, to provide the additional elements of claims 7 and 17 in the method and apparatus of Mehta. *See id.*, ¶180.

As discussed *supra* Section VIII.A.1.d., Mehta discloses restorably deflectable electrical contacts (i.e. contact portions 116 in the form of spring contacts or spring pins) that provide an electrical pathway from a power supply to the needles 104. Mehta discloses that the power supply provides energy to the needles 104 in what is referred to as bipolar operation, wherein radiation is transmitted from a transmitter microneedle to a receiver microneedle of a microneedle pair. *See* EX1004 at 17:59-61 (describing pairs of an "active" and a "return" needle), 18:18-20 (describing "electrode pair**s** that are coupled to a single

channel of a power supply") (emphasis added), 37:25-34 (describing passing current between needles "of opposite polarity"). For multiple pairs of opposite polarity needles coupled to a single channel of a power supply, a first plurality of needles is coupled to a first polarity electrical contact and a second plurality of needles is coupled to a second polarity electrical contact. *See* EX1003, ¶¶181-182.

It would have been obvious to a POSA to modify Mehta to provide a cost-effective manner of connecting multiple needle pairs to a single channel of a power supply by coupling a first electrical contact 116 to a first plurality of needles 104 and by coupling a second electrical contact 116 to a second plurality of needles 104—i.e. by providing multiple, parallel current paths branching from a single electrical contact to connect to multiple ones of needles 104. *See id*., ¶¶182-183. The motivation would have been to decrease the cost and complexity of cartridge 100 and handpiece 210, thereby providing a more affordable device that appeals to a cost-sensitive market segment. *See id*., ¶184. Furthermore, a POSA would have had a reasonable expectation of success because providing parallel current paths would have been a matter of routine engineering. *id*., ¶183.

Accordingly, claims 7 and 17 are obvious over Mehta in view of the knowledge of a POSA.

5. Dependent Claims 9 and 19

It would have been obvious (for the reasons set forth *supra* Section VIII.B.1.), in view of the knowledge of a POSA, to modify Mehta to allow a user to predetermine a distance of needle extension and/or a depth for the needles to extend into the patient's skin. *See* EX1003, ¶185. Accordingly, claims 9 and 19 are obvious over Mehta in view of the knowledge of a POSA. *See* Sections VIII.A.6., VIII.A.12., and VIII.B.1., *supra*.

C. Ground III: Claims 4-5 and 14-15 are Obvious over Mehta, Na '848, and the Knowledge of a POSA

Claims 4-5 and 14-15 would have been obvious to a POSA under Section 103 in view of Mehta, Na '848, and the knowledge of a POSA. *See* EX1003, ¶186.

1. The Mehta-Na '848 Combination

It would have been obvious to a POSA to combine Mehta with Na '848 to arrive at the subject matter of claims 4-5 and 14-15. Mehta and Na '848 are readily combinable because both references are directed to systems and methods of treating dermatological tissue using energized microneedles. *See*, *e.g.*, EX1005, ¶¶25-27, FIG. 2A; EX1004 at 2:37-41, FIG. 2A; EX1003, ¶187.

Na ’848 FIG. 2A	Mehta FIG. 2A
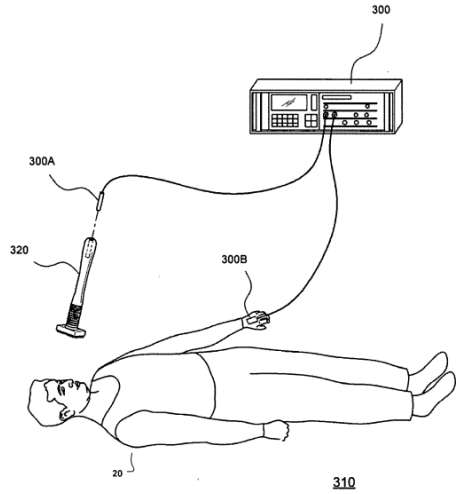	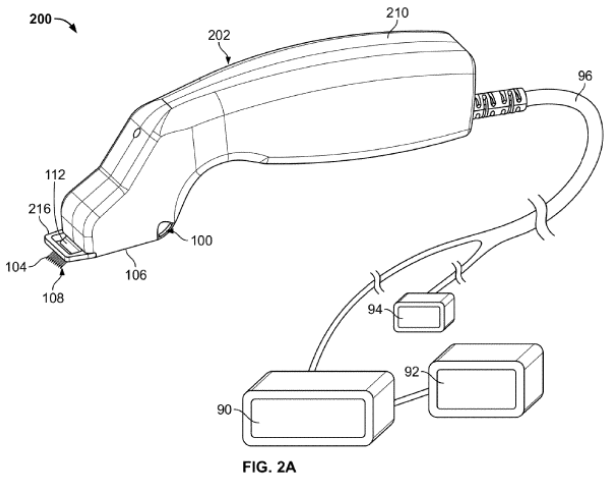

A POSA would have been motivated to combine Mehta and Na ’848 because they are directed to similar technologies and a POSA would have understood the benefits of combining these two references. *See* EX1003, ¶187. A POSA would have understood that there was a high likelihood of success in making the combination. *Id*.

As discussed *supra* Section VIII.B.3., Mehta discloses light sources at the proximal end of handpiece 210 and a photonic signal generator electrically coupled to those light sources. Na ’848 teaches that, for energized microneedling treatment, the application of “LED light of specific frequencies” to dermatological tissue can decrease “treatment time and facilitate healing.” EX1005, ¶46. Na ’848 also teaches several “optimal LED wavelengths for skin repair.” *Id*., ¶47. And Na ’848 teaches “generat[ing] one or more signals for LEDs” by a controller coupled to the LEDs “via one or more electric wires 106.” *Id*., ¶37.

It would have been obvious to utilize LEDs in Mehta's treatment system in order to provide illumination of Mehta's needles 104 and the tissue into which they are inserted during treatment with actinic light of optimal wavelengths for skin repair—as taught by Na '848. *See* EX1003, ¶¶188-189. It would also have been obvious to energize the LEDs by "generat[ing] one or more signals for the LEDs" via a controller, as taught by Na '848 (EX1005, ¶36), e.g. the energy source/supply 94 of Mehta. *See* EX1003, ¶189. Utilizing LEDs, as taught by Na '848, in Mehta's system would require nothing more than the "predictable use of prior art elements according to their established functions" and yield a "predictable result[]." *KSR Int'l Co. v. Teleflex Inc.*, 550 US 398, 401 (2007); *see* EX1003, ¶189.

Furthermore, as discussed *supra* Section VIII.B.3., embedding LEDs in a handpiece, such as the handpiece 210 of Mehta, was well known to a POSA, and it would have been an obvious design choice to embed LEDs, such as those disclosed by Na '848, in the proximal end of the handpiece 210 of Mehta.

As also discussed *supra* Section VIII.B.3., Mehta discloses that portions of the treatment device 202 are translucent. *See* EX1004 at 22:65-23:10. In addition, Na '848 teaches a needle assembly in the form of a plate that includes a plurality of needles and a translucent section that would allow light emitted by the LEDs disposed behind the plate to be transmitted to the needles. Specifically, Na '848 discloses an acupuncture plate 200 of a dermatological treatment apparatus 10

having an acupuncture section 250 that "include[s] a plurality of acupuncture pins or needles" and that can be "translucent" and formed of a "polyurethane, medical silicon, or other pliable, translucent, hypoallergenic material." EX1005, ¶¶23, 35. Na '848 contains the same disclosure as the '536 patent with regard to a needle assembly that includes a translucent section. *Compare* EX1005, ¶¶23, 35, FIG. 1C *with* EX1001 at 2:61-67, 5:12-18, FIG. 1C.

It would have been obvious for a POSA to modify Mehta to provide the needle assembly 102 in the form of Na '848's plate including a plurality of needles and a translucent section—particularly for variations of Mehta's device that "can be held at a more vertical angle to the target tissue like a pencil or pointer" (EX1004 at 9:57-59) and that include needle assembly 102 with an MxN array of needles 104 (*see* EX1004 at 15:49-54), where both M and N have relatively large values, e.g., ~5-10. *See* EX1003, ¶192. Forming at least a section of the needle assembly 102 of Mehta from the "polyurethane, medical silicon, or other pliable, translucent, hypoallergenic material," as described by Na '848, would facilitate transmission of light, from an LED embedded in the proximal end of handpiece 210, to the needles 104 and the tissue into which they are inserted during treatment. *See id*., ¶193. Providing Mehta's needle assembly 102 in the form of a plate including a translucent section and a plurality of needles, as disclosed by Na '848, would have been a matter of routine engineering. *See id*., ¶194.

2. Dependent Claims 4 and 14

Mehta anticipates claims 1 and 11, from which claims 4 and 14 depend. *Supra* Sections VIII.A.1. and VIII.A.7. Mehta also discloses light sources at the proximal end of handpiece 210 and a photonic signal generator electrically coupled to the light sources. *Supra* Section VIII.B.3. Na '848 discloses using LEDs to provide illumination. EX1005, ¶¶45-46. A POSA would have been motivated, based on the teachings of Na '848, to utilize LEDs for the light sources at the proximal end of Mehta's handpiece 210, to embed the LEDs in the proximal end of Mehta's handpiece 210, and to provide for the control of Mehta's photonic signal generator so as to utilize the LEDs to illuminate Mehta's needles 104/needle assembly 102. *Supra* Sections VIII.B.3. and VIII.C.1.; EX1003, ¶¶195-197. Accordingly, the combination of Mehta, Na '848, and the knowledge of a POSA renders claims 4 and 14 obvious.

3. Dependent Claims 5 and 15

The combination of Mehta, Na '848, and the knowledge of a POSA renders claims 4 and 14, from which claims 5 and 15 depend, obvious. *Supra* Section VIII.C.2. Mehta discloses the use of translucent materials (*see* EX1004 at 22:65-23:10), and Na '848 discloses a needle assembly in the form of a plate that includes a plurality of needles and a translucent section that enables light emitted by LEDs to be transmitted to needles of a needle assembly (*see* EX1005, ¶¶23, 35). Indeed,

the only place where the ’536 specification describes a needle assembly having a translucent section is in the portion of the ’536 patent which overlaps with Na ’848, such that the only possible written description support for this limitation in the ’536 patent is substantially identical to the prior art teachings of Na ’848. *Compare* EX1001 at 5:15-18 (“pin section 250, 353, may be translucent”), FIGS. 1C (element 250), 2F (element 353) *with* EX1005 at [0035], FIGS. 1C, 2F; EX1003, ¶191. It would have been obvious to modify Mehta to provide Mehta’s needle assembly 102 in the form of Na ’848’s plate that includes a translucent section—particularly for variations of Mehta’s device 202 where handpiece 210 is designed to be held at a more vertical angle and where needle assembly 102 has larger arrays of needles 104. *Supra* Sections VIII.B.3. and VIII.C.1.; EX1003, ¶¶198-200. Accordingly, the combination of Mehta, Na ’848, and the knowledge of a POSA renders claims 5 and 15 obvious.

D. Ground IV: Claims 7 and 17 are Obvious over Mehta in view of Livneh

Claims 7 and 17 would have been obvious to a POSA under Section 103 in view of Mehta and Livneh. *See* EX1003, ¶201.

1. The Mehta-Livneh Combination

It would have been obvious to a POSA to combine Mehta with Livneh to arrive at the subject matter of claims 7 and 17. Mehta and Livneh are readily combinable because both references are directed to systems and methods of

treating dermatological tissue using energized microneedles. *See*, *e.g.*, EX1004 at FIG. 2A, 2:37-41; EX1012 at FIGS. 3-4, ¶¶5, 32, 40; EX1003, ¶202.

Livneh FIG. 3

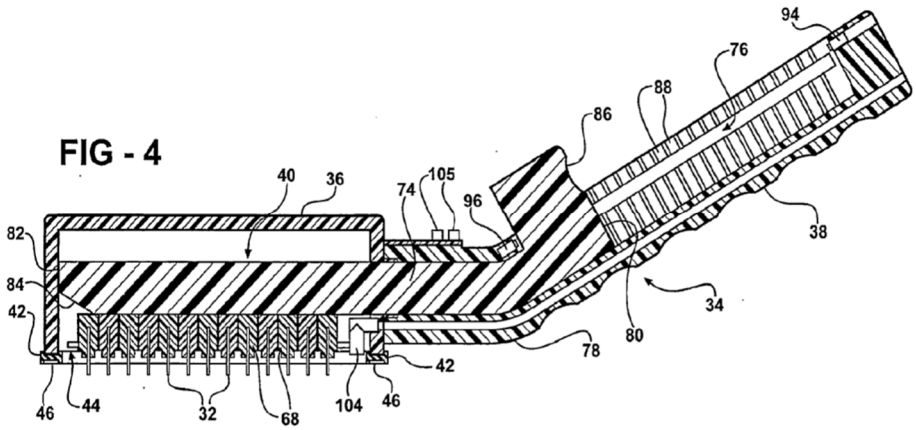

Mehta FIG. 2A

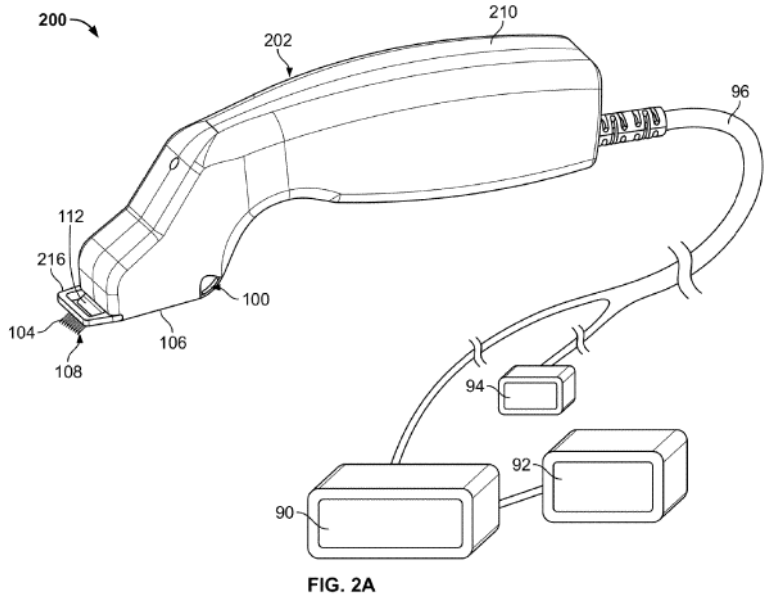

A POSA would have been motivated to combine Mehta and Livneh because they are directed to similar technologies and a POSA would have understood the benefits of combining these two references. *See id.*, ¶¶202-204. A POSA would

have understood that there was a high likelihood of success in making the combination. *See id*., ¶202.

As discussed *supra* Section VIII.B.4., Mehta discloses devices configured for bipolar operation in which multiple pairs of opposite polarity needles are coupled to a single channel of a power supply, such that a first plurality of needles is coupled to a first polarity electrical contact and a second plurality of needles is coupled to a second polarity electrical contact. Livneh similarly describes "an electrosurgical apparatus 30" configured for "bipolar operation, as shown in Figure 1," which is reproduced below. EX1012, ¶¶32, 39.

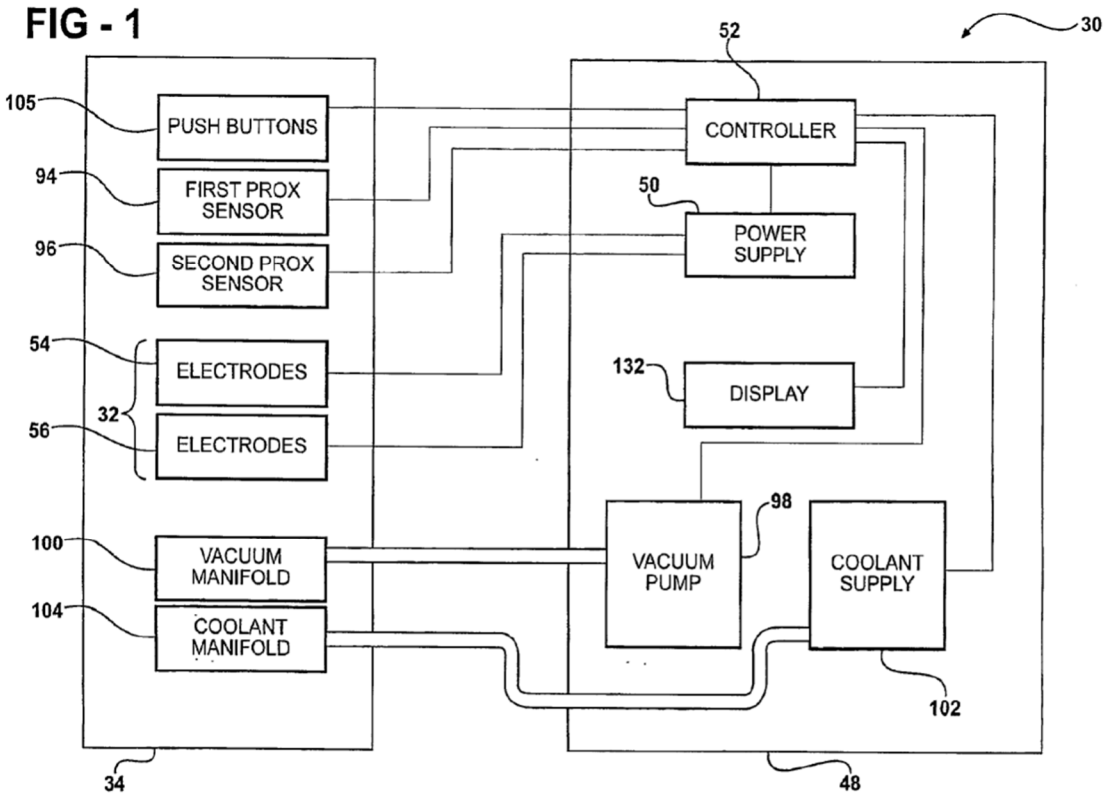

Livneh—FIG. 1

In Livneh's bipolar operation, an "RF signal is applied through a first set 54 of the electrodes 32," which are shaped like needles, and "a second set 56 of electrodes [serve] as a return path to the power supply 50." *Id*., ¶¶39-40. The needle-shaped electrodes are "arranged into a plurality of combs 62" (*id*., ¶47), each of which is "supported by a holder 68" (*id*., ¶48).

Livneh teaches that "[i]n the bipolar configuration, as shown in Figure 10" (reproduced below), an "elastically deformable coil 92" of each holder 68 is connected to one of two wires 51, where one wire 51 provides a supply path from the power supply 50 and the other wire 51 provides a return path." *Id*., ¶49.

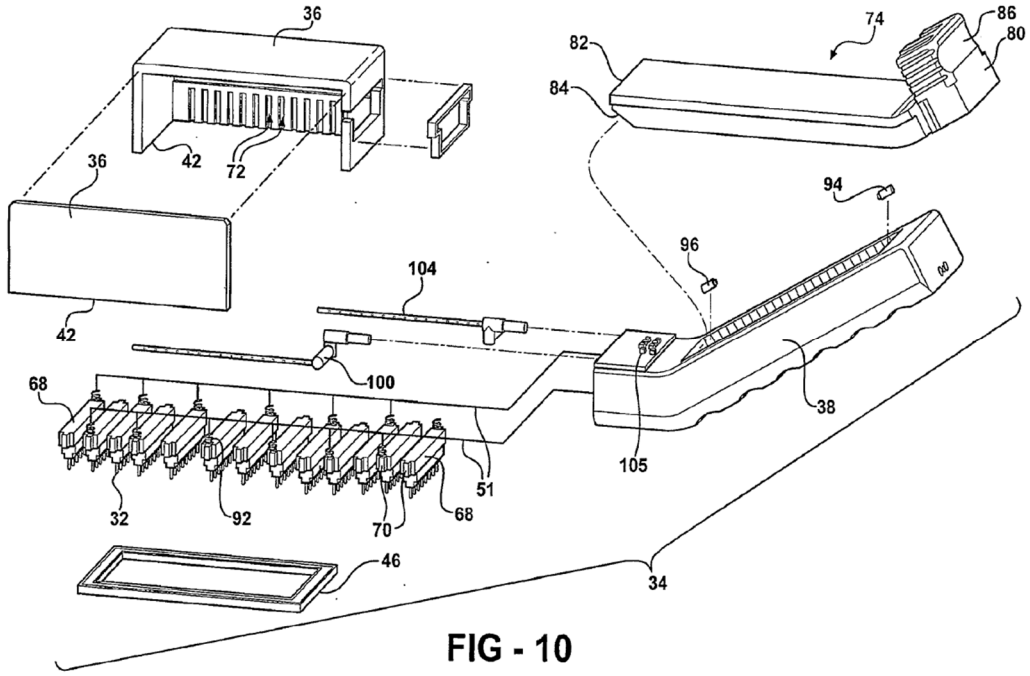

FIG - 10

Livneh—FIG. 10

Livneh thereby discloses a first deflectable electrical contact (i.e. a first coil 92 connected to the supply path wire 51) coupled to a first plurality of extendable

needles (i.e. the needle-shaped electrodes 32 of a first of comb 62), and a second deflectable electrical contact (i.e. a second coil 92 connected to the return path wire 51) coupled to a second plurality of extendable needles (the needle-shaped electrodes 32 of a second comb 62).

It would have been obvious to a POSA, prior to the earliest possible priority date of the ’536 patent to have combined Mehta with Livneh to arrive at the subject matter of claims 7 and 17. *See* EX1003, ¶205. Specifically, it would have been obvious to a POSA to connect multiple pairs of Mehta’s needles 104 to a single channel of a power supply, as Mehta discloses (*see* EX1004 at 18:18-20), by using a single deflectable electrical contact to connect a power supply line (i.e. wire) to first polarity needles and a second deflectable electrical contact to connect a return line (i.e. wire) to second polarity needles—as Livneh teaches (*see* EX1012, ¶¶48-49). *See* EX1003, ¶205. The motivation would have been to decrease the cost and complexity of cartridge 100 and handpiece 210, thereby providing a more affordable device that appeals to a cost-sensitive market segment. *Supra* Section VIII.B.4.; EX1003, ¶206. Furthermore, implementing Livneh’s wiring architecture with Mehta’s treatment device would have been a matter of routine engineering and would have yielded predictable results. *See id*.

2. Dependent Claims 7 and 17

Mehta anticipates and/or renders obvious claims 1 and 11, from which claims 7 and 17 depend. *Supra* Sections VIII.A.1., VIII.A.7. and VIII.B.4. Mehta discloses a microneedling treatment device configured for bipolar operation in which multiple needle pairs are connected to a single channel of a power supply (*see* EX1004 at 18:18-20), while Livneh discloses a wiring architecture for connecting multiple needle pairs to a single channel of a power supply (*see* EX1012, ¶¶48-49). It would have been obvious to utilize Livneh's wiring architecture in Mehta's treatment system. *Supra* VIII.D.1.; EX1003, ¶¶207-209. Accordingly, the combination of Mehta and Livneh renders claims 7 and 17 obvious.

E. Ground V: Claims 1-3, 6, 8-9, 11-13, 16, and 18-19 are obvious over Mehta and Lee

As discussed *supra* Section VIII.A.1., Mehta discloses elements [11pre], [11a], [11b], [11c], [11d], and [11e]. With respect to element [11d], even if Serendia's narrow interpretation of "desired distance" were to be adopted, claims 1-3, 6, 8-9, 11-13, 16, and 18-19 would have been obvious over Mehta and Lee. *See* EX1003, ¶210.

1. The Mehta-Lee Combination

It would have been obvious to a POSA to combine Mehta with Lee to arrive at the subject matter of claims 1-3, 6, 8-9, 11-13, 16, and 18-19. Mehta and Lee are

readily combinable because both references are directed to systems and methods of treating dermatological tissue using needles driven into skin tissue by a step-, or stepper, motor. *See*, *e.g.*, EX1004 at 15:34-40, FIGS. 2B, 3B; EX1011 at <23>-<26>, <45>-<53>, <60>-<63>, FIGS. 2-4b; EX1003, ¶211.

Lee FIG. 2	**Mehta FIGS. 2B, 3B**
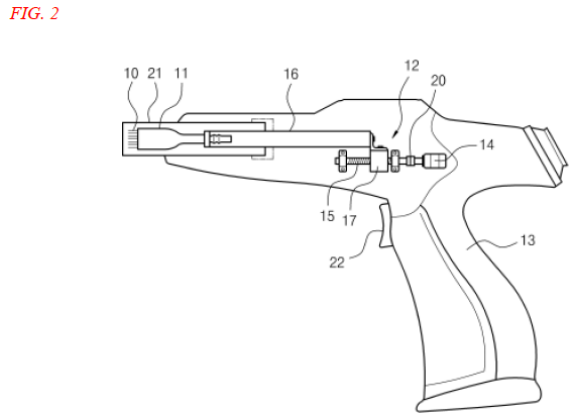	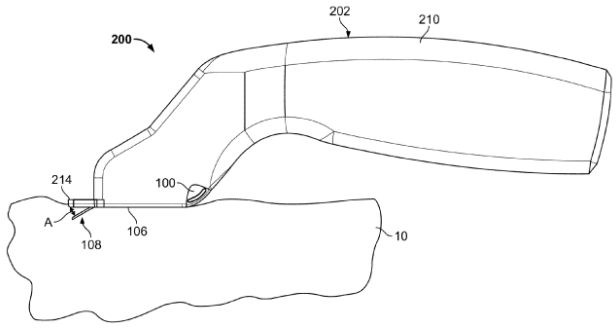 FIG. 2B 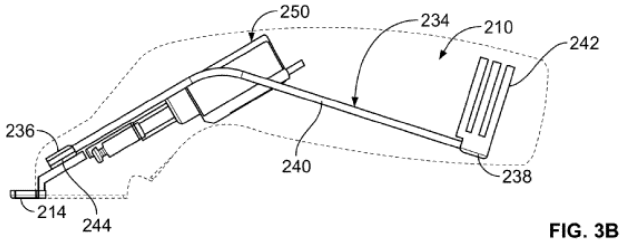 FIG. 3B

A POSA would have been motivated to combine Mehta and Lee because they are directed to similar technologies and a POSA would have understood the benefits of combining these two references. *See* EX1003, ¶211. A POSA would have understood that there was a high likelihood of success in making the combination. *Id*.

As discussed *supra* Section VIII.B.1.a., Mehta discloses a motor capable of providing a user-settable distance of needle extension, i.e. a "step-motor." *See*

EX1004 at 15:34-40. Lee similarly discloses a "stepping motor" 14 that rotates to move a slider 17 and needle mount 11, thereby allowing for precise control of an insertion depth of the needles along the axis of needle extension. *See* EX1011 at <46>-<50>, <69>, Figs. 4a-4b. Lee teaches that an "operational parameter (amount of rotation) of the motor is set to determine the insertion depth of the needles," i.e. by "setting the mode," and the "motor 14 rotates…in accordance with the mode selected" such that "the insertion depth of the microneedles can be controlled." EX1011 at <50>, <60>-<61>.

A POSA would have been motivated to modify Mehta in view of Lee to precisely control a needle extension distance along the axis of extension and thereby gain benefits taught by both Mehta and Lee. *See*, *e.g.*, EX1004 at 12:41-13:4 (avoiding burns), 21:14-21 (uniformity; avoiding undesirable cosmetic outcomes and insufficient treatment), 33:30-31; EX1011 at <69> (minimizing pain; low cost; customized treatment; safety); EX1003, ¶213. A POSA would further have been motivated to control Mehta's step-motor in the manner taught by Lee for the reasons discussed *supra* Section VIII.B.1.a. Therefore, to the extent that Mehta does not teach user-settable control of needle extension along the axis of extension, a POSA would have been motivated to provide user-settable control of needle extension in the device 202 of Mehta based on the teachings of Lee.

When the prior art identifies a problem (controlling needle insertion depth) and provides express guidance on how to fix the problem (a "position-controllable" motor, which may be a "stepping motor," that allows for precise control of an insertion depth of the needles along the axis of needle extension—as taught by Lee), a POSA would have had a reasonable expectation of success in combining the prior art. *See, e.g.*, *In re Inland Steel*, 265 F.3d 1354, 1364 (Fed. Cir. 2001). Utilizing Mehta's step-motor in the manner taught by Lee would have yielded predictable results, as it amounts to nothing more than the operation of a known component (a step-motor as disclosed in both Mehta and Lee) according to its established function (providing step-based actuation for needles along the axis of needle extension as taught by Lee). *See* EX1003, ¶214. A POSA would only have needed to appropriately configure Mehta's control system/energy supply unit 90 in the conventional manner taught by Lee—i.e., controlling a motor, via routine programming, to extend needles a desired distance corresponding to a user selection. *See* EX1003, ¶214; EX1011 at <50>; *supra* Section VIII.B.1.a. This combination is not the product of innovation but of ordinary skill and common sense. *KSR*, 550 U.S. at 421.

2. Claims 1-3, 6, 8-9, 11-13, 16, and 18-19

To the extent Serendia's interpretation of "desired distance" is adopted *and* Mehta is found to lack the "desired distance" limitations recited in claims 1 and 11

based thereon, claims 1-3, 6, 8-9, 11-13, 16, and 18-19 would have been obvious over Mehta in view of Lee.

Mehta discloses a motor (i.e. actuator 250), e.g. a step-motor, coupled (via shaft 256 and coupling portion 118 of needle assembly 102) to a plurality of extendable needles (i.e. needles 104) that causes the plurality of extendable needles to extend. *See* EX1004 at 15:34-40, 18:25-31. Lee teaches a "step-motor 14 that rotates to move a slider 17 and needle mount 11, and controlling the step-motor 14 by setting an operational parameter that corresponds to an amount of rotation of the motor to determine an insertion depth of microneedles. *See* EX1011 at <46>, <49>-<50>, <60>. It would have been obvious to combine these teachings of Lee (regarding how to use a step-motor for needle extension) with the teachings of Mehta (regarding a motor being used for needle extension) to arrive at the "desired distance" limitations—as interpreted by Serendia—of claims 1-3, 6, 8-9, 11-13, 16, and 18-19. *Supra* Section VIII.E.1; EX1003, ¶¶215-219. Accordingly, the combination of Mehta and Lee renders claims 1-3, 6, 8-9, 11-13, 16, and 18-19 obvious.

F. Ground VI: Claims 1-9 and 11-19 are obvious over Mehta and Lee in view of the Knowledge of a POSA

As discussed above in Section VIII.B. (Ground II), claims 1-9 and 11-19 are obvious over Mehta in view of the knowledge of a POSA. However, to the extent

that Serendia's interpretation of "desired distance" is adopted *and* to the extent that needles extendable "a desired distance" are not found obvious over Mehta in view of the knowledge of a POSA based thereon, claims 1-9 and 11-19 would have been obvious over Mehta and Lee in view of the knowledge of a POSA. A POSA would have been motivated, for the reasons set forth *supra* Sections VIII.B. and VIII.E., to apply advantageous teachings of Lee (i.e. regarding precise control of needle insertion depth and the structures to achieve the same) in modifying Mehta (i.e. to provide for a user-settable needle extension distance along the axis of extension). Accordingly, the combination of Mehta, Lee, and the knowledge of a POSA renders claims 1-9 and 11-19 obvious. *See* EX1003, ¶220.

G. Ground VII: Claims 4-5 and 14-15 Would Have Been Obvious over Mehta, Lee, Na '848, and the Knowledge of a POSA

As discussed above in Section VIII.C. (Ground III), claims 4-5 and 14-15 are obvious over Mehta and Na '848. However, to the extent that Serendia's interpretation of "desired distance" is adopted *and* to the extent that Mehta is found to lack the teaching of needles being extendable "a desired distance" based thereon, claims 4-5 and 14-15 would have been obvious over Mehta and Lee, further in view of Na '848. *See* EX1003, ¶221.

1. The Mehta, Lee, and Na '848 Combination

Mehta, Lee, and Na '848 are directed to systems and methods of treating dermatological tissue using energized microneedles to improve cosmetic

conditions. *See supra* Sections VIII.C.1. and VIII.E.1. A POSA would have been motivated to apply advantageous teachings of Lee regarding precise control of needle insertion depth and of Na '848 regarding the use of LEDs to provide illumination and the use of a translucent section in a needle assembly to facilitate transmission of the LED light. *See* EX1003, ¶222. Further, the combination of these references would have been a matter of routine engineering and would have yielded predictable results. *Supra* Sections VIII.C.1. and VIII.E.1; EX1003, ¶222.

Accordingly, the combination of Mehta, Lee, and Na '848 renders claims 4-5 and 14-15 obvious.

H. Ground VIII: Claims 7 and 17 are Obvious over Mehta, Lee, and Livneh

As discussed above in Section VIII.D (Ground IV), claims 7 and 17 are obvious over Mehta and Livneh. However, to the extent that Serendia's interpretation of "desired distance" is adopted *and* to the extent that Mehta is found to lack the teaching of needles being extendable "a desired distance" based thereon, claims 7 and 17 are obvious over Mehta and Lee, further in view of Livneh. *See* EX1003, ¶223.

1. The Mehta, Lee and Livneh Combination

A POSA would have been motivated to combine Mehta with Lee for the reasons discussed above in Section VIII.E.1, and a POSA would have further been motivated to add Livneh to this combination of Mehta and Lee for the reasons

discussed above in Section VIII.D.1. As discussed in Sections VIII.E.1 and VIII.D.1, all three of these references are directed to systems and methods of treating dermatological tissue using energized microneedles, and a POSA would have been motivated to apply advantageous teachings of Lee regarding precise control of needle insertion depth, as well as advantageous teachings of Livneh relating to electrical contacts for bipolar operation, to Mehta's treatment system. *See* EX1003, ¶224. Further, the combination of these three references would have been a matter of routine engineering and would have yielded predictable results. *Supra* Sections VIII.D.1. and VIII.E.1; EX1003, ¶224.

Accordingly, the combination of Mehta, Lee, and Livneh renders claims 7 and 17 obvious.

IX. THE BOARD SHOULD INSTITUTE TRIAL UNDER SECTIONS 314 AND 325

The Board should not exercise its discretion to deny institution under 35 U.S.C. §§ 314 or 325. This Petition presents compelling evidence of non-patentability based on entirely new prior art, expert testimony, and arguments. No Ground involves "roadmapping" from the outcome in the Cartessa Aesthetics IPRs. Neither Petitioner is a party in any district court litigation involving the '536 patent, and all such litigation has been stayed. And—perhaps most importantly—institution would further "the Board's mission to improve patent quality."

Code200, UAB v. Bright Data Ltd., IPR2022-00861, 2022 WL 3646167, at *3 (P.T.A.B. August 23, 2022) (precedential) (internal quotations and citation omitted).

A. The Board Should Not Exercise Its Discretion to Deny Institution Under 35 U.S.C. § 314(a)

This Petition presents exceptionally compelling evidence of unpatentability based on a single prior art reference that either anticipates or demonstrates the obviousness of all challenged claims. *See supra* Sections VIII.A-VIII.H. Under § 314(a), there is far more than a "reasonable likelihood that the petitioner would prevail." Refusing to grant the petition "would undercut the congressional grant to the United States Patent and Trademark Office of significant power to revisit and revise earlier patent grants as a mechanism to improve patent quality and restore confidence in the presumption of validity that comes with issued patents." *Code200*, 2022 WL 3646167, at *2 (internal quotations omitted). The "AIA was designed to encourage the filing of meritorious patentability challenges, by any person who is not the patent owner." *Coalition for Affordable Drugs VI, LLC v. Celgene Corp.*, IPR2015-01092, Paper 19 at 4 (P.T.A.B. Sept. 25, 2015); Vidal, K., Memorandum, "Interim Procedure for Discretionary Denials in AIA Post-Grant Proceedings with Parallel District Court Litigation," at 4-5 (USPTO Jun. 21, 2022)

(clarifying, where there is compelling evidence of unpatentability, "the PTAB should not discretionarily deny institution under *Fintiv*") ("Interim Procedure").

General Plastic Industrial v. Canon Kabushiki Kaisha, IPR2016-01357, Paper 19 at 15-19 (P.T.A.B. Sept. 6, 2017) (precedential) ("*General Plastic*") and its progeny also do not apply. This is an exceptionally strong petition, and neither Petitioner was a real party in interest or in privity with the petitioner in the earlier Cartessa Aesthetics IPRs. *See Illumina v. Ravgen*, IPR2021-01271, Paper 12, at 15-20 (P.T.A.B. Jan. 26, 2022). Neither Petitioner has a "significant relationship" with Cartessa Aesthetics, had control over the Cartessa Aesthetics IPRs, participated or provided input into the Cartessa Aesthetics IPRs, or had knowledge of them prior to their being filed. *See Valve Corp. v. Elec. Scripting Prods., Inc.*, IPR2019-00062, Paper 11 at 2, 10 (P.T.A.B. Apr. 2, 2019); *Toyota Motor Corp. v. Intellectual Ventures II*, IPR2022-00708, Paper 12, at 10 (P.T.A.B. Oct. 12, 2022). Petitioners filed the present petition on their own behalf and as the real parties in interest, and not "at the behest of [anyone else]." *See Western Digital Techs. Inc. v. Viasat, Inc.*, IPR2022-01126, Paper 13, at 15 (P.T.A.B. Nov. 29, 2022).

Of great significance, Petitioners are not using the earlier proceedings as a "roadmap" here. Petitioners employ entirely different art, different arguments and a different expert. They make no use of the art, argument, responses, or holdings in the Cartessa Aesthetics IPR to "refine" failed arguments there. *Toyota Motor*,

IPR2022-00708, Paper 12, at 10 (quoting *Code200*) ("[F]actors 1-3 only weigh in favor of discretionary denial when there are 'road-mapping' concerns under factor 3 or other concerns under factor 2.").

This is Petitioners' first petition for IPR of the '536 patent and the timing of its filing involves no improper gamesmanship. *Netflix, Inc. et al. v. Uniloc 2017 LLC*, IPR2020-00041, Paper 10, at 12 (P.T.A.B. Mar. 25, 2020) (holding factor 2, 4, and 5 do not weigh in favor of denying institution in view of alleged delay in filing). This Petition should be granted because it presents new and strong evidence of unpatentability of claims 1-9 and 11-19 "by a different petitioner…, applying substantially different prior art, based on substantially different arguments," and thus "cannot be said to be wasteful of resources of the Board." *Western Digital Corp. v. SPEX Techs., Inc.*, IPR2018-00082, 2018 WL 1990246, at *9 (P.T.A.B. Apr. 25, 2018); *see also Code200,* 2022 WL 3646167, at *3 (factor 6 must consider Board's mission to improve patent quality); Interim Procedure at 2 (should not discretionarily deny institution where "petition presents compelling evidence of unpatentability").

Neither Petitioner is a named defendant in any pending litigation. All district court litigation in which Serendia asserts Petitioners' products are infringing has been stayed. *Serendia, LLC v. Cutera, Inc.*, No. 1:23-cv-00222, Dkts. 10, 11 (Apr. 4, 2023 D. Del.); *Serendia, LLC v. Cynosure, LLC*, No. 1:23-cv-00223, Dkts. 11,

12 (Apr. 5, 2023 D. Del.). There have been no Scheduling Conferences, and no trial dates have been set. The Board will issue a final written decision in this IPR long before any such litigation would go to trial, and, accordingly, whatever estoppel effect this IPR has, if any, would go into effect then. Therefore, the Board should not discretionarily deny institution of IPR in view of any parallel proceeding. *See* Interim Procedure at 7.

The existence of a parallel ITC action should not be a factor for consideration in determining whether the Board may exercise its discretion to deny institution. Interim Procedure at 6-7 ("The PTAB will not discretionarily deny petitions based on applying *Fintiv* to a parallel ITC proceeding").

B. The Board Should Not Exercise Its Discretion to Deny Institution Under 35 U.S.C. § 325(d)

The Petition also involves substantially different prior art than previously considered by the Patent Office. Under 35 U.S.C. § 325(d), "[i]n determining whether to institute…the Director may take into account whether…the same or substantially the same prior art or arguments previously were presented to the Office." That Section does not apply here because the prior art references used herein are new and different from any prior art considered earlier. Accordingly, the arguments presented here are entirely new and different from any presented earlier.

Under § 325(d), the Board uses the following two-part framework: (1) whether the same or substantially the same art previously was presented to the Office or whether the same or substantially the same arguments previously were presented to the Office; and (2) if either condition of the first part of the framework is satisfied, whether the petitioner has demonstrated that the Office erred in a manner material to the patentability of challenged claims. *Advanced Bionics, LLC v. Med-el Elektromedizinische Geräte GmbH*, IPR2019-01469, 2020 WL 740292, at *3 (P.T.A.B. Feb. 13, 2020) (precedential). In this case, these factors counsel for the grant of the petition.

None of Mehta, Na '848, Lee, or Livneh was of record in the original examination or earlier Cartessa Aesthetics IPRs. These references provide compelling new evidence of anticipation and obviousness that demands consideration by the Office. None of this new evidence is cumulative or overlaps with any art or arguments presented earlier. These factors strongly argue in favor of institution of IPR.

X. CONCLUSION

Based on the foregoing, Petitioners respectfully request that a Trial be instituted and that claims 1-9 and 11-19 of the '536 patent be canceled.

Respectfully submitted,

Date: January 8, 2024

/s/ Wesley O. Mueller
Wesley O. Mueller (Reg. No. 33,976)
Lead Counsel for Petitioners

CERTIFICATE OF WORD COUNT COMPLIANCE

Pursuant to 37 C.F.R. § 42.24 (d), I hereby certify that this Petition complies with the type-volume limits of 37 C.F.R. § 42.24 (a)(1)(i). As calculated by the word count feature of the word-processing system used to prepare this Petition, it contains 13,914 words, excluding the parts of this Petition that are exempted by 37 C.F.R. § 42.24 (a) (including a table of contents, a table of authorities, mandatory notices under 37 C.F.R. § 42.8, a certificate of service or word count, and appendix of exhibits or claim listing).

Date: January 8, 2024

/s/ Wesley O. Mueller
Wesley O. Mueller (Reg. No. 33,976)
Lead Counsel for Petitioners

CERTIFICATE OF SERVICE

I hereby certify that, on January 8, 2024, true and correct copies of this Petition for *Inter Partes* Review of U.S. Patent No. 9,320,536 under 35 U.S.C. §§ 311-319 and 37 C.F.R. § 42.100 *et seq.*, including all exhibits thereto, and Power of Attorney were served in their entirety via Federal Express overnight delivery upon the Patent Owner at the following correspondence address of record as listed in the USPTO Patent Center:

Jae Y Park
KILE PARK REED & HOUTTEMAN PLLC
1101 30th Street, N.W.
Suite 500
Washington, DC 20007
United States

A courtesy copy was also served via Federal Express overnight delivery and/or electronic mail on Patent Owner's attorney of record in the concurrent litigation matter:

Timothy Devlin
DEVLIN LAW FIRM LLC
1526 Gilpin Avenue
Wilmington, DE 19806
tdevlin@devlinlawfirm.com

Kevin C. Wheeler
Cecilia Sanabria
Michael A. David
Charles H. Sanders
LATHAM & WATKINS LLP
555 11th St. NW, Suite 1000
Washington, D.C. 20004-1304
Phone: (202) 637-2200
kevin.wheeler@lw.com
cecilia.sanabria@lw.com
michael.david@lw.com
charles.sanders@lw.com

Date: January 8, 2024

/s/ Wesley O. Mueller
Wesley O. Mueller (Reg. No. 33,976)
Lead Counsel for Petitioners