Hydrate Formation in Chevron Mabee Unit for NGL Recovery and CO_2 Purification for EOR

Abstract

In the early 1990's, Chevron installed a new process to recover natural gas liquids (NGLs) from recycled CO_2 in their Rangely Weber Sand Unit. The facility was designed based on a patent issued in June of 1988 (U.S. Patent # 4,753,666). The process, as claimed in the patent, used a refluxed distillation tower to produce an overhead stream virtually free of n-butane and heavier components and a bottoms stream containing the majority of the heavier components. Based on the success of the Rangley plant's operation, a similar facility was designed and fabricated by Dickson Process Systems and installed in Chevron's Mabee field near Midland, Texas.

When the Mabee plant faced some unique challenges in the NGL Recovery unit, Chevron contacted Dickson Process Systems, Bryan Research & Engineering (BR&E), and Sulzer Chemtech USA to help troubleshoot the process to operate as designed. The Mabee NGL Recovery unit is a distillation column with a partial condenser and a reboiler. The condenser, operating between 4-15 ^{o}F, experienced what were described as "reflux events", where liquid level would rapidly buildup in the reflux accumulator.

While troubleshooting, it was found that hydrates formed in the top section of the column, restricting the liquid from continuing down to the next tray. The resulting buildup of liquid not only prevented reflux from entering the column, but also flooded the trays and quickly overwhelmed the top section of the column. This paper describes the process used to identify and address the formation of hydrates in the top section of the distillation column and the use of process simulation modelling combined with plant data to improve plant operability.

Submitted to Gas Processors Association 2017 by:

Jenn Welsh

Process Engineer

Chevron North America Exploration and Production Company (a Chevron U.S.A. Inc. division)

Justin C. Slagle

Sr. Consulting Engineer

Bryan Research & Engineering, Inc.

Steve Cheaney, P.E.

Sr. Engineer

Dickson Process Systems

Glenn Shiveler

Applications Specialist

Sulzer Chemtech USA, Inc.

PILOT EXHIBIT 2012, PAGE 001

Introduction

In 2013, an NGL recovery unit designed and fabricated by Dickson Process was added onto the existing compressor station in Chevron's Mabee field outside of Andrews, TX. This unit was installed between 2nd and 3rd stage compression following the existing triethylene glycol (TEG) dehydrator. The NGL recovery unit was designed based on a feed gas water content of 3 lbs/MMscf in accordance to Chevron's US Patent 4,753,666 [1]. TEG dehydration units routinely remove water to levels below 7 lb/MMscf in the dry gas. If stripping gas is utilized, the water content of 3 lbs/MMscf can be achieved [2]. In this system, NGLs are extracted using a reflux column to produce an overhead stream free of n-butane and heavier components and a bottoms stream containing the heavier components.

The distillation column is a 26-tray tower equipped with a partial condenser and reboiler, as shown in Figure 1. A pressure differential transmitter spans from tray 1 through tray 26. Temperature transmitters are equipped at the column overhead, column inlet located at tray 15, tray 23, and column bottoms. Propane is used as the refrigerant in the partial condenser. The reflux accumulator level is maintained through the use of continuously operating pumps along with a level control valve feeding the reflux back into the column and a flow control valve recycling reflux back to the accumulator.

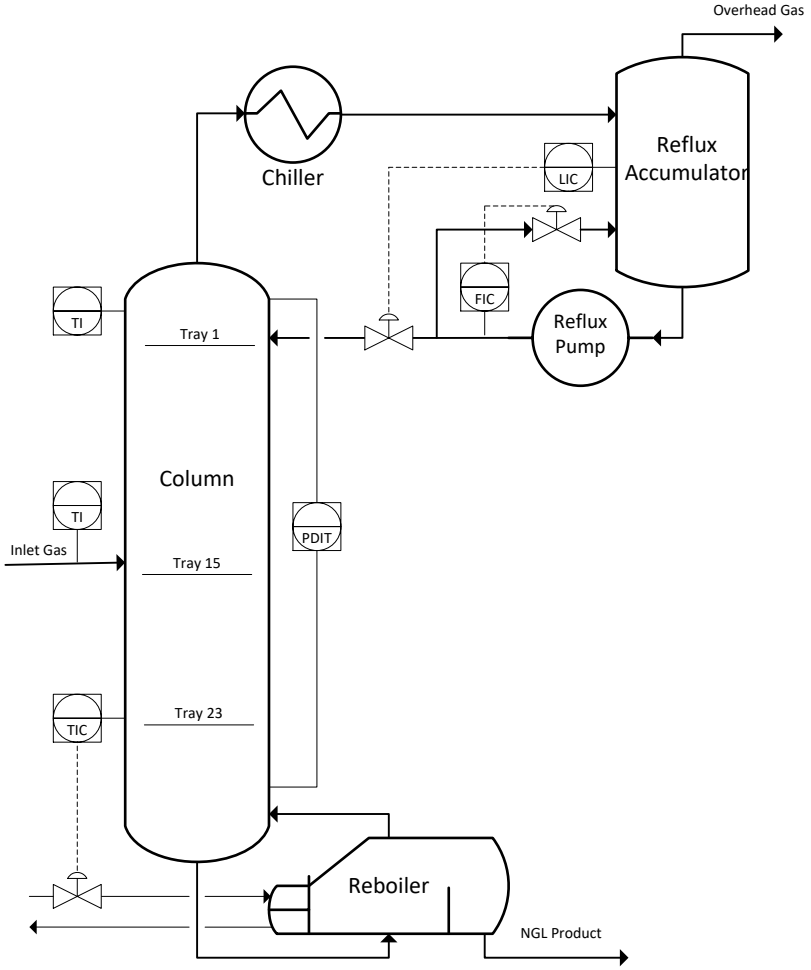

Figure 1: Process Flow Diagram of Distillation Column and Reflux

PILOT EXHIBIT 2012, PAGE 002

After deployment, the distillation tower experienced what plant operations coined as "reflux events." During these events, the reflux level in the reflux accumulator would suddenly rise at a rapid rate. The level would remain high and overwhelm the tower reflux system. Corrective action involved warming up the chiller outlet temperature to stop liquid generation until the reflux accumulator level fell within the normal operating range. This pattern is shown in Figure 2. These corrective measures disrupted the temperature profile across the column, reduced NGL production, increased H_2S content in the NGL product, and required continuous involvement from plant operators.

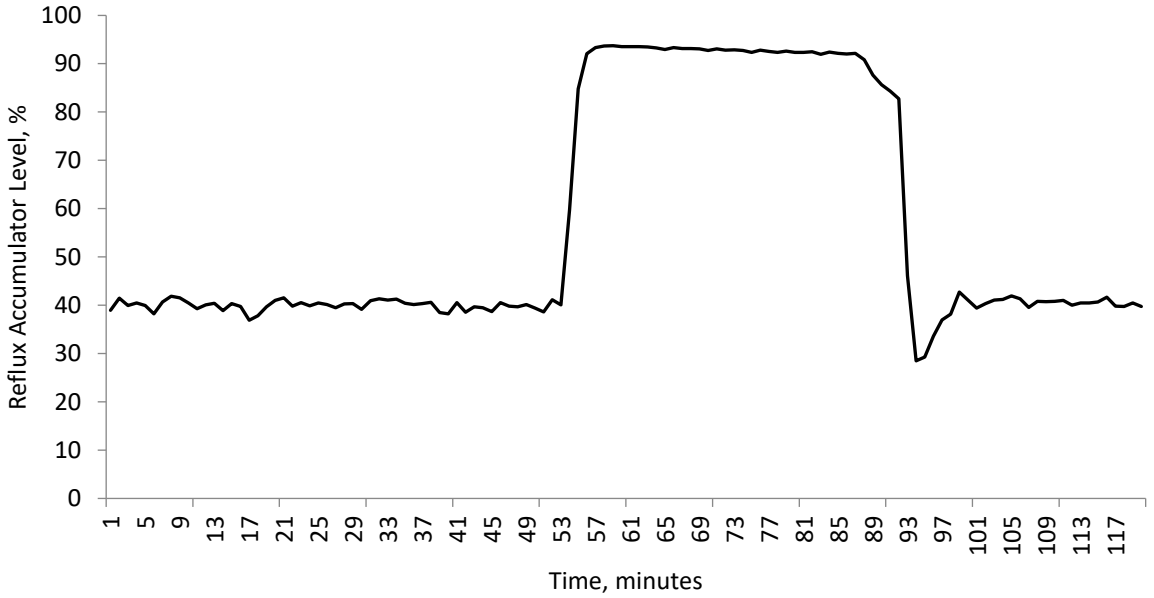

Figure 2: Example of Reflux Accumulator Level Versus Time During a Reflux Event

While this solution maintained operability in the short-term, a long-term solution was desired. Therefore, a team consisting of engineers from Chevron, Dickson Process Systems, Bryan Research & Engineering, Inc., and Sulzer Chemtech USA, Inc. was assembled to quality check and troubleshoot the process to ensure the facility operated as designed. With Sulzer Chemtech's assistance, column hydraulics were ruled out as the source of the reflux events.

Identifying the Cause of Rapid Liquid Buildup in the Reflux Accumulator

The first step was to develop a process simulation of the distillation column to model the process conditions and study the possible causes of the reflux events. The NGL extraction model was developed in ProMax® [3] based on data collected from the field. The composition results from the simulator agreed with the data well, as shown in Table 1.

PILOT EXHIBIT 2012, PAGE 003

Table 1: Model Validation of Plant Data

	Field	Model
Condenser Temp, F	5.7	5.7
Reboiler Temp, F	260	260
NGL Composition, mol %		
Propane	6.02	5.48
i-Butane	17.11	16.75
n-Butane	41.78	38.39
i-Pentane	14.57	14.20
n-Pentane	9.50	8.96
Hexane +	10.84	10.96

To thoroughly diagnose the abnormal conditions, the team reviewed the operations upstream of the NGL Recovery Unit. As shown by Figure 3, upstream of the distillation tower, glycol dehydration removes water from the process gas in preparation for NGL extraction. If water exceeds certain thresholds in the NGL recovery column, the water can become trapped in the tower trays, leading to blockages and, if conditions allow, hydrate formation.

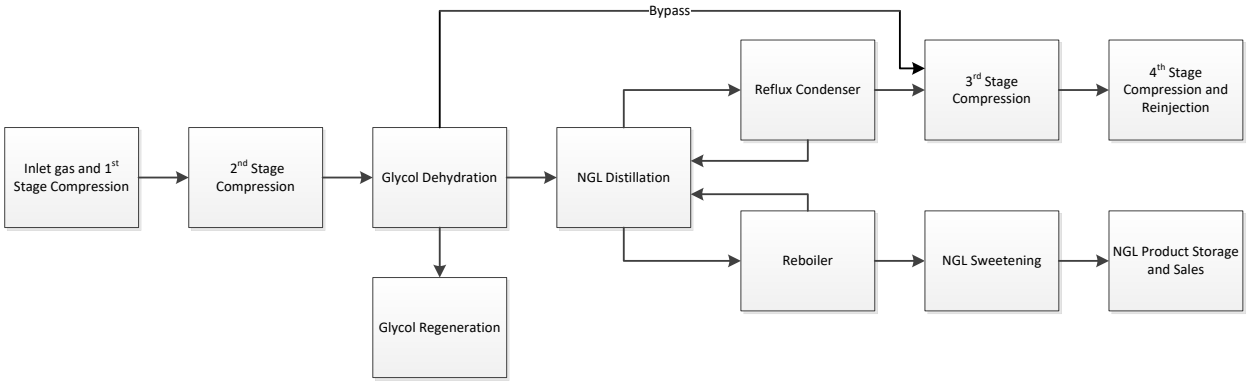

Figure 3: Mabee Gas Plant Block Flow Diagram

Initially, it was thought that the reflux events were not a result of hydrate formation or trapped water as field instrumentation indicated very low water content in the feed gas. When modeled with an inlet feed water content below 3 lbs/MMscf, the process simulation model predicted no hydrate formation in the NGL recovery column. Additionally, the pressure differential transmitter across the tower spanned 0 to 1 psi across the tower trays, offering little insight as to the tray loading both leading up to and during the events. Figure 4 illustrates data collected in the facility where reflux events were observed despite data indicating moisture content to the tower well below the design requirement of 3 lb/MMscf.

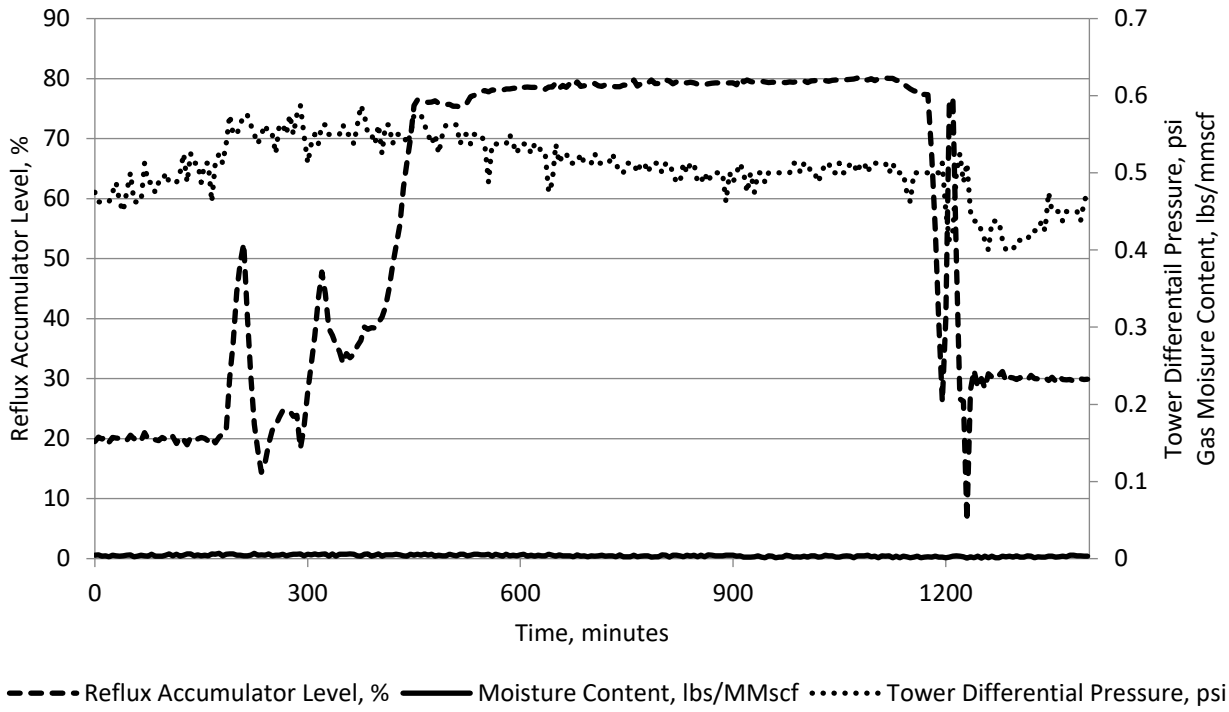

Figure 4: A Typical Reflux Event as Shown Through Reflux Accumulator Level, Inlet Moisture Content, and Tower Differential Pressure

In the interest of creating a model of the entire plant to evaluate upstream effects on this process, a model of the dehydration unit was added with current operating data and integrated with the NGL recovery model. Once the team modeled the upstream TEG dehydration unit, the predicted water content at the inlet of the NGL recovery unit was noticeably higher than what instrumentation indicated.

As designed by Dickson Process Systems, the NGL recovery unit required a dried feed gas with a water content of no more than 3 lbs/MMscf. When modeled at the operating conditions, a gas water content of 9 lbs/MMscf was predicted. The plant engineers manually measured the moisture content in the inlet feed to the NGL recovery column using Draeger tubes and a hand-held automatic dew point hygrometer, both of which confirmed the higher water content predicted by the model. The in-line water content analyzer was found to be miscalibrated, which explained why it was difficult to identify the cause of the reflux events. In the interest of collecting the most accurate data moving forward, the in-line moisture analyzer was recalibrated and currently delivers reasonable values.

The updated model of the NGL recovery unit showed significant hydrate formation in the rectifying section of the column, which led to a belief that hydrates or trapped water blocked the liquid return from the reflux accumulator to the column. The pressure differential transmitter was recalibrated, rescaled, and converted to report values in inches of water to identify these blockages. Prior to the modifications to the pressure differential transmitter, Figure 4 shows that there was no indication of a flooding within the tower. Recalibration of the instruments helps identify these issues through rises in column differential pressure.

Accurately modeling the entire plant provided a very good reality check and proved to be a useful tool for troubleshooting the integrated facility. Chevron was able to quickly identify the cause of the reflux events and immediately moved to resolve it.

The Solution

Improvements to the operation of the existing facility were required to be fully aligned with pre-deployment expectations for the performance of the integrated NGL recovery unit. The team focused on reducing water content to the NGL recovery unit through process optimization. The dehydration system, in place before the addition of the NGL recovery unit, uses triethylene glycol as a solvent to physically absorb water. The water rich glycol is then regenerated and returned to the contactor to start the process all over again as shown in Figure 5.

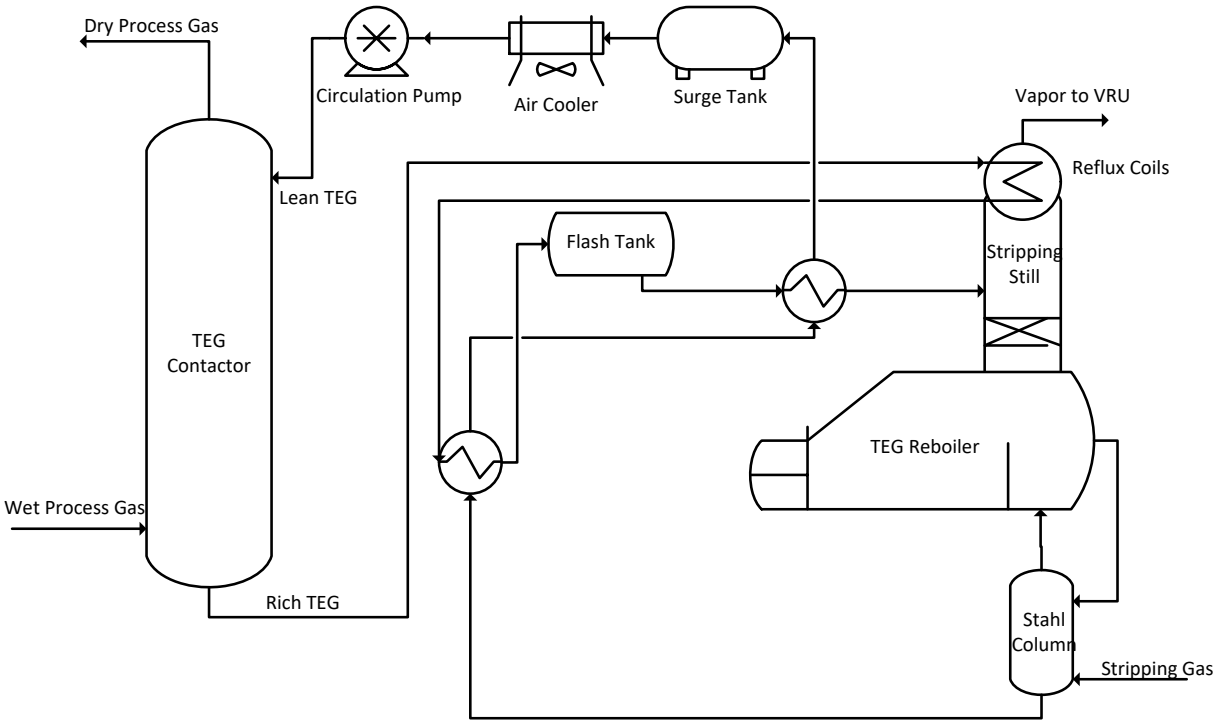

Figure 5: Process Flow Diagram for Gas Dehydration and Glycol Regeneration

The solvent circulation rate, reboiler temperature, stripping gas flowrate and process gas inlet temperature were all considered during optimization. At the time of troubleshooting, the reboiler temperature was 375 ^{o}F while circulating 25 sgpm of TEG without stripping gas.

The circulation rate was modeled and evaluated, as shown in Figure 6. Roughly one pound per minute of water was required to be removed, indicating about three gallons per minute of glycol needed to be contacted with the gas [2].

PILOT EXHIBIT 2012, PAGE 006

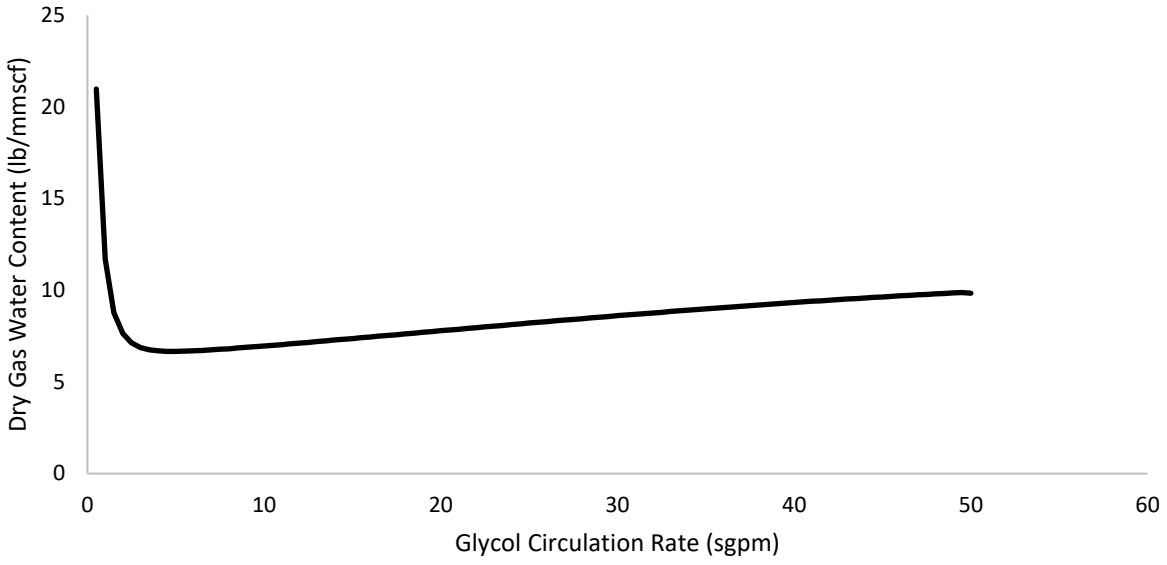

Figure 6: TEG Circulation Effect on Dry Gas Water Content Without Stripping Gas

The trend may counter previously held understandings that more glycol circulation results in a dryer gas, but is easily explained when looking at the temperature effect the solvent circulation has on the dry gas. The lean TEG will have a higher temperature than the wet gas. Typically, the lean TEG temperature effect on the dry gas temperature is negligible due to the significantly lower flowrate when compared to the high flowrate of the gas, as it is common to maintain a 3:1 ratio of glycol being circulated to water being removed. The Mabee plant was operating at about 25 gallons of glycol per pound of water being removed. If the lean glycol flowrate is increased, it increases the temperature of the column, which shifts the water equilibrium point in the gas. A warmer gas holds more water [2]. At low flowrates of TEG, the temperature effect is insignificant. Having knowledge of this trend prevents the temptation to circulate more TEG. Keeping the circulation rate low ensures the gas stays as cool as possible through the contactor.

While the optimum TEG circulation rate was found to be near 3 sgpm, pump constraints prevented the TEG rate from being less than 12 sgpm. Therefore, the TEG circulation rate was reduced from 25 sgpm to 12 sgpm. Optimizing the circulation rate in and of itself would not reduce the dry gas water content to hydrate free levels in the NGL recovery unit. The addition of stripping gas was needed to accomplish this goal. At a constant glycol circulation rate of 12 sgpm, the dry gas water content was studied at various reboiler temperatures and stripping gas rates in Figure 7.

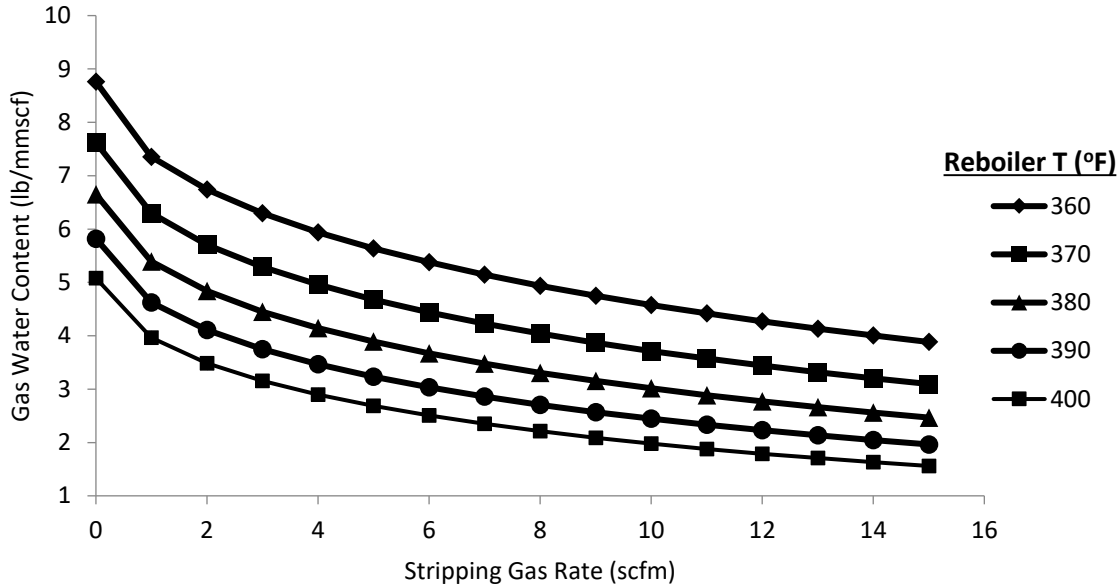

Figure 7: The Effect of Stripping Gas and Reboiler Temperature on Dry Gas Water Content

With no stripping gas to the dehydration unit, Figure 7 shows that even a reboiler temperature of 400 °F is not sufficient to reduce feed gas moisture content below 3 lbs/MMscf [4]. As glycol is known to degrade at temperatures higher than 400 °F, it is necessary to introduce some stripping gas to the system in order to achieve the desired water content [4]. Since multiple combinations of reboiler temperature and stripping gas rate can achieve the desired result, operational costs can be calculated and compared across the probable cases to determine the most cost effective solution. In this case, the reboiler temperature and stripping gas rate were increased to 390 F and 6 scfm, respectively, in order to achieve a moisture content averaging around 3 lbs/MMscf to the tower.

Finally, the inlet gas temperature was evaluated against the dry gas water content in Figure 8.

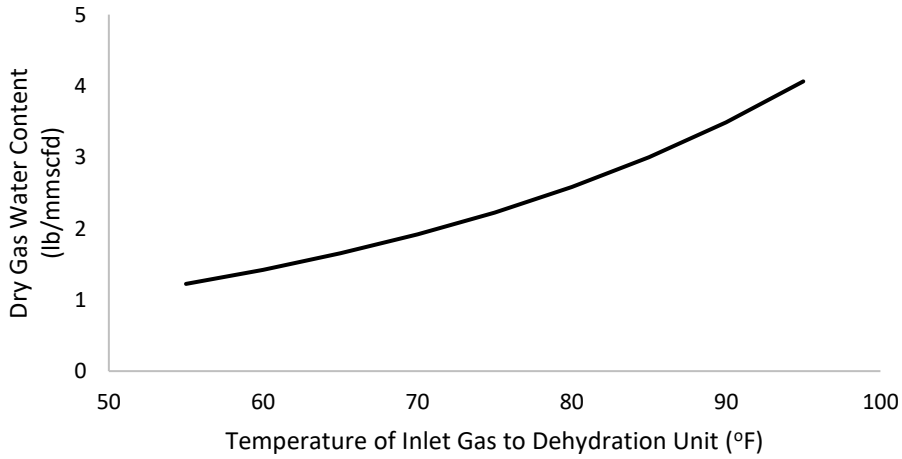

Figure 8: Effect of Inlet Temperature on the Dry Gas Water Content for 390 °F Reboiler and 6 scfm Stripping Gas

As expected, the trend shows lower dry gas water content at lower inlet gas temperatures [2]. By reducing the inlet gas temperature, the dry gas water content could be reduced well below the design limit. Based on the optimization study, the dehydration plant operating conditions were changed to the conditions summarized in Table 2.

Table 2: Summary of Changes Made to the Dehydration Unit

	Previous	Present Day
Inlet Gas Temperature (°F)	85	60
Glycol Circulation Rate (sgpm)	25	12
Reboiler Temperature (°F)	375	390
Stripping Gas (scfm)	0	6
Dry Gas Water Content (lb/mmscf)	9	1.5

Once the changes were made in the plant, new data was collected which showed close agreement with the predictions from the simulator.

Distillation Tower Operations

While operating the dehydration unit at its optimum is important, operators need to know what temperature to operate the NGL distillation tower in order to mitigate the risk of hydrate formation. Figure 9 was created to give clear recommendations for operation of the tower temperatures at various inlet water contents. Although the margin is thin, Figure 9 shows operational flexibility.

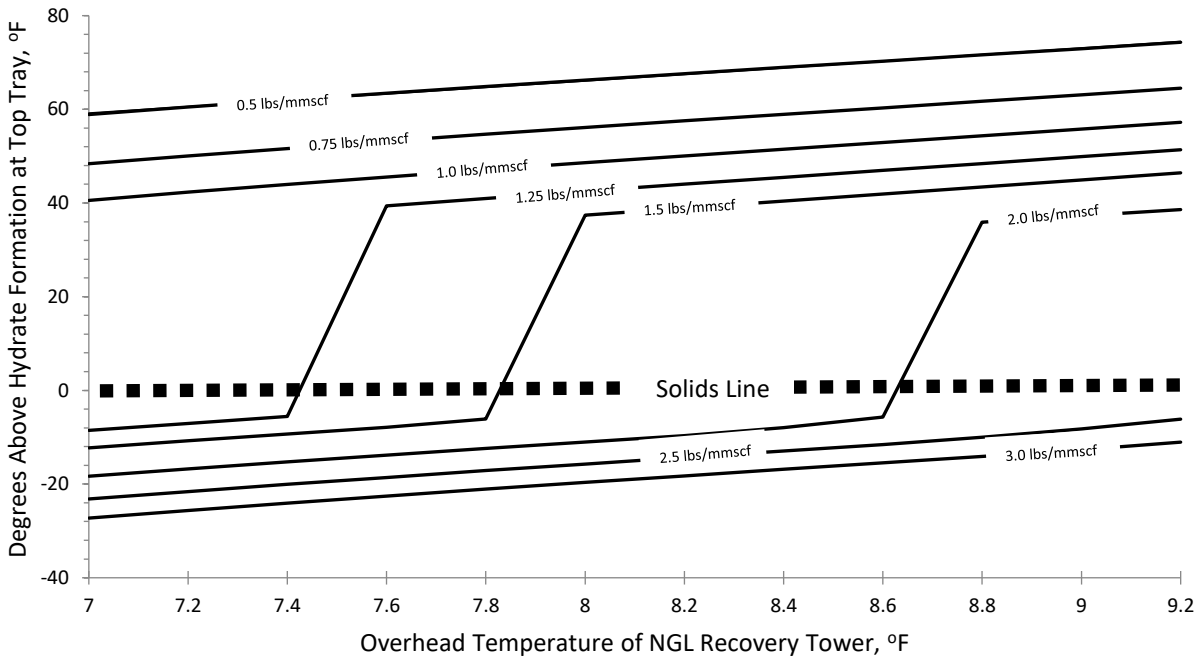

Figure 9: Operator Reference Guide to Avoid Hydrate Formation at Various Inlet Water Contents

With reduced reflux events bringing on smoother operations and better understanding of tower internals, the team then identified an opportunity to improve the top tower controls to more directly control the reflux accumulator level while achieving NGL product to the desired specification.

Conclusions

The water content of the inlet gas to the incorporated NGL recovery unit greatly affected the expected operational reliability of the rectifying section. Once the pressure differential and moisture analyzer transmitters were rescaled to report accurate values, the team identified the need to optimize the existing TEG regeneration unit to meet the design feed conditions. An operator reference guide was created to monitor the NGL recovery tower condenser temperature to avoid hydrate risk, resulting in more reliable operations and a reduction the operational demands of the unit.

In order to take the appropriate steps to troubleshoot process issues, instrumentation should be functioning reliably and reporting accurate data to properly identify the issues. Process models like ProMax® are valuable tools in identifying instrumentation reliability and opportunities for improvement. Process models can be used to validate data being received from the plant and identify the most effective operating parameters for process optimization. And finally, involving the right team of people in troubleshooting efforts can accelerate solutions.

An accurate model was essential to making meaningful decisions about operating the NGL recovery and glycol dehydration units. Since the optimization effort, the Mabee Gas Plant is operating reliably and reflux events of this nature are rarely observed.

Works Cited

[1] G. R. Pastor, J. F. Peters, W. K. Larsen and A. C. Iakovakis.United States of America Patent 4,753,666, 1988.

[2] Gas Processors Suppliers Association, Engineering Data Book, Tulsa, 1998.

[3] Bryan Research & Engineering, Inc., "ProMax 4.0," Bryan, 2016.

[4] A. L. Kohl and R. Nielsen, Gas Purification, Gulf Professional Publishing, 1997.