[redacted]

UNITED STATES INTERNATIONAL TRADE COMMISSION
WASHINGTON, D.C.

Before the Honorable MaryJoan McNamara
Administrative Law Judge

In the Matter of CERTAIN DERMATOLOGICAL TREATMENT DEVICES AND COMPONENTS THEREOF	Inv. No. 337-TA-1356

COMPLAINANT'S JULY 24, 2023 SUPPLEMENTAL VALIDITY CONTENTIONS

Serendia, LLC
Exhibit 2003
Jeisys v. Serendia
IPR2024-00386

TABLE OF CONTENTS

PAGE

I. INTRODUCTORY STATEMENT 1

II. LEVEL OF ORDINARY SKILL IN THE ART 7

III. PRIORITY 8

A. The ’836, ’379, and ’444 Patents Are Entitled To A Priority Date Of June 14, 2011 8

B. The ’536, ’718, and ’812 Patents Are Entitled To A Priority Date Of March 15, 2010 14

IV. AIA STATUS 20

A. The Asserted Claims of the ’379, ’444, ’774, and ’812 Patents Are Entitled To A Priority Date Before March 16, 2013 20

B. The Asserted Claims of the ’836, ’379, ’444 Patents Are Supported By Pre-March 16, 2013 Disclosure 23

V. RESPONDENTS’ IDENTIFICATION OF PRIOR ART 29

VI. 35 U.S.C. §§ 102 AND 103 29

A. The ’836, ’379, and ’444 Patents 31

B. The ’536, ’774, and ’812 Patents 141

C. Obviousness 302

VII. 35 U.S.C § 112 341

A. The ’836, ’379, and ’444 Patents 342

B. The ’536, ’774, and ’812 Patents 367

VIII. 35 U.S.C § 101 399

A. The Claims Are Eligible At *Alice* Step One 400

B. The Claims Are Eligible At *Alice* Step Two 407

IX. INVENTORSHIP 410

[redacted]

A. [redacted]

B. [redacted]

X. INEQUITABLE CONDUCT.....416

I. INTRODUCTORY STATEMENT

This document comprises Serendia's supplemental response to Respondents' initial invalidity contentions. The Asserted Patents are presumed to be valid, and therefore Respondents bear the burden of proving, by clear and convincing evidence, specifically why the patents are not valid. However, Respondents' final invalidity contentions fail to present a *prima facie* case of invalidity for any of the Asserted Claims. For example, Respondents have not adequately explained how the alleged prior art references anticipate or render obvious the claims of the Asserted Patents. Rather than providing notice to Serendia regarding which specific invalidity theories Respondents intend to pursue, Respondents' final invalidity contentions combines essentially every reference with one another. Those obviousness grounds are in addition to the alleged anticipation grounds Respondents have identified. Not only is the number unreasonable and untenable, Respondents' final invalidity contentions fails to put Serendia on notice on *how* the references are being combined. Specifically, nothing in Respondents' final invalidity contentions identifies: i) which limitations of any of the asserted claims are missing from the primary reference that are allegedly disclosed in the secondary reference(s); ii) how and why a person of ordinary skill in the art ("POSITA") would be motivated to combine those references to arrive at the claimed invention; or iii) why the POSITA would have a reasonable expectation of success in doing so. Thus, Respondents have failed to put Serendia on notice of the specific theories supporting their invalidity contentions.

Therefore, Serendia can respond to Respondents' final invalidity contentions with a level of detail that commensurate with the level of detail in Respondents' final invalidity contentions. Accordingly, Serendia reserves the right to supplement or amend these contentions based on its continued investigation into the alleged prior art, continued investigation into the objective indicia of non-obviousness, any new discovery, any changes or supplements that Respondents make to

their invalidity contentions (to the extent Respondents are permitted to supplement their contentions), and claim construction proceedings.

Additionally, where Serendia cites specific portions of the Respondents' alleged prior art references in support of these contentions, they are only examples and should not be construed as the only bases for Serendia's validity contentions. Serendia reserves the right to supplement this response accordingly, and provide additional citations to Respondents' alleged prior art, in addition to other publications, literature, products, and the background understanding of a POSITA to identify the flaws in Respondents' contentions and further support the validity of the Asserted Patents. Furthermore, Serendia intends to rely on fact and expert testimony to support its contentions, including but not limited to testimony regarding the disclosure, scope, and validity of the Asserted Patents, the support in the applications and patents to which the Asserted Patents claim priority to support Serendia's claim of priority, the state of the art, and Respondents' asserted prior art references, and will produce expert reports in accordance with the procedural schedule in this Investigation.

Further, Serendia makes the below reservations of rights in view of Respondents' final invalidity contentions:

Missing Limitations: For each alleged prior art reference for which Respondents provide at least some substantive discussion in its invalidity contentions, Serendia provides a non-limiting identification of limitations of each asserted claim that are not disclosed by the identified reference. Where Serendia identifies a particular claim limitation that is not met in a given purported prior art reference, Serendia makes no admission with respect to whether other claim limitations are met in that reference, regardless of whether Serendia specifically addresses the other claim limitations in its response to Respondents' contentions.

Claim Construction: The ALJ has not yet adopted any constructions of any disputed claim terms. Nevertheless, to the extent the parties have competing claim constructions, they do not materially affect the issues referenced below—that Respondents' cited references do not disclose the limitations listed below and do not invalidate any Asserted Claim of any Asserted Patent. Serendia reserves the right to address infringement and validity based on whatever constructions the ALJ adopts at the appropriate time.

Identification of Alleged Prior Art: While Respondents' invalidity contentions contain certain "exemplary" charted prior art, Respondents' invalidity contentions further include a reservation purporting to rely on a host of other prior art that has not been explicitly cited and discussed in Respondents' invalidity contentions:

> Respondents incorporate by reference (1) any and all prior art contained or identified in documents produced by Complainant to one or more Respondents in this case; (2) any and all additional materials regarding or bearing upon invalidity in Complainant's or any third party's possession or control that have not been produced to date, to the extent that any exist; and (3) prior art of which any named inventor of the Asserted Patent is aware and/or on which they contend the alleged invention of the Asserted Patents build or improve upon. Respondents may also rely upon the disclosures of the references cited and/or discussed during the prosecution of the Asserted Patents and/or the assertions presented regarding those references.

Respondents' Jul. 10, 2023 Invalidity Contentions, at 7-8. This is improper, and does not put Serendia on notice of any additional invalidity theories on which Respondents may intend to rely. Serendia will respond only to the specific references/combinations charted in the Exhibits and/or discussed in Respondents' invalidity contentions. Serendia reserves the right to move to strike any assertions of anticipation and obviousness that are not specifically identified and charted.

Anticipation: Respondents' contentions state in conclusory fashion, "As shown in the attached charts, and in the analysis below, each Asserted Claim is anticipated by, and/or obvious in view of, one or more items of prior art identified in these disclosures, alone or in combination."

Id. at 27. This fails to provide Serendia with sufficient notice regarding Respondents' contentions, including which specific references Respondents assert anticipate which specific claims, and which claims Respondents are asserting are obvious in view of specific combinations of primary and secondary references.

Respondents further purport to reserve the right to assert that the Asserted Claims are invalid under 35 U.S.C. § 102(g), claiming that:

> Each disclosed item of prior art is evidence of a prior invention and making of the invention in the United States by another under 35 U.S.C. § 102 (g), as evidenced by the named inventor(s), author(s), organization(s), and publisher(s) involved with each such reference, with the circumstances described and reflected in each reference including publications and system implementation references.

Id. at 8. Respondents did not, however, articulate any basis for such a challenge to any of the claims and therefore any such contentions are waived. Serendia reserves the right to respond or move to strike any previously undisclosed contentions, as appropriate.

Obviousness: Respondents state in their final invalidity contentions that, "[a]s a general matter, all portions of each prior art item are relied upon to support the disclosure of each patent claim limitation, as all portions provide general support," and "[i]n addition to the attached charts, additional prior art that may be used for obviousness combinations is identified throughout these Preliminary Invalidity Contentions." *Id*. at 28. This is improper and does not provide Serendia sufficient notice regarding the alleged prior art references upon which Respondents intend to rely. Serendia responds herein to the specific charted combinations, and reserves the right to move to strike any combinations put forward in the future that Respondents did not specifically chart in its invalidity contentions.

Respondents further state in their invalidity contentions that:

> Identified in the attached claim charts and below are exemplary portions of the references based on presently available information and Complainant's current allegations. The references, however, may contain additional support for particular

[redacted]

> claim limitations. Respondents expressly reserve the right to rely on additional or different portions of the prior art items other than those specifically cited in these claim charts and/or below, other documents subject to discovery, and its expert reports to provide context and/or to aid in understanding the cited portions of the references.

Id. at 28. This is improper, and fails to place Serendia on notice of Respondents' invalidity contentions and the support for those contentions. To the extent Respondents have failed to identify the specific portions of the alleged prior art that allegedly invalidates the Asserted Patents, Respondents have failed to adequately apprise Serendia of the bases on which they intend to meet that burden.

Respondents further contend that:

> [C]ertain prior art identified in these Final Invalidity Contentions is evidence of simultaneous or near-simultaneous independent invention by others of the alleged invention as recited in one or more of the Asserted Claims. Respondents reserve the right to rely on the simultaneous or near-simultaneous independent invention by others as further evidence of the obviousness of the Asserted Claims.

Id. at 44. This is improper, and fails to place Serendia on notice of Respondents' invalidity contentions and the support for those contentions. Because Respondents have failed to identify any specific instance of simultaneous invention in support of any obviousness contention, Respondents have failed to adequately apprise Serendia of the bases on which they intend to meet that burden.

Respondents' invalidity contentions further fail to provide sufficient motivation or reason to combine and/or modify the various references that Respondents allege are prior art, fail to describe the manner in which Respondents contend such references are to be combined, and fail to explain why the POSITA would have a reasonable expectation of success in doing so. For each of the Asserted Patents, Respondents' invalidity contentions merely make conclusory statements that "[a] person of ordinary skill in the art would have been motivated to combine the prior art references for each Asserted Patent (e.g., as identified herein and in Exhibits A-01 to F-13) with a reasonable expectation of success in doing so." *Id*. at 42. Such boilerplate recitations fail to

sufficiently explain Respondents' contentions regarding why a POSITA would be motivated to combine and/or modify the alleged prior art references.

Moreover, while Respondents provide certain "exemplary" motivations to combine (*see e.g., id*.at 47-52), these "exemplary" motivations simply reference purported general motivations to combine *all* of Respondents references. Respondents' invalidity contentions also fail to provide any actual reasoning or facts supporting any motivation to combine, and merely include an identical boilerplate recitation of the legal standard for each combination. *See Id*.

Moreover, as discussed above, Respondents invalidity contentions do not particularly explain which *specific* limitations Respondents assert are missing in any primary reference, *how* that limitation is disclosed in any combined reference(s), and *why* a POSITA would be motivated to combine any *specific* combination of references with a reasonable expectation of success in doing so. Additionally, Respondents fail to provide adequate obviousness analysis and fail to provide adequate contentions regarding the *Graham v. John Deere* and *KSR Int'l Co. v. Teleflex Inc.* factors. Respondents' invalidity contentions are thus facially deficient.

Objective Indicia of Non-Obviousness: Further, objective indicia of non-obviousness support the validity of the Asserted Claims of the Asserted Patents. Serendia continues to investigate the facts underlying objective indicia of non-obviousness for each of the Asserted Patents, and will supplement their contentions accordingly, and will also present such evidence in expert reports. Notably, Respondents have failed to produce many documents responsive to Serendia's discovery requests pertaining to secondary indicia of non-obviousness, and Serendia reserves the right to supplement these contentions when Respondents produce these documents, and further reserves the right to seek evidentiary sanctions should Respondents continue to ignore its discovery obligations.

Evidence of objective indicia of non-obviousness includes, but is not limited to, teaching away, failure of others, long-felt but unmet need, failure to recognize the problem addressed by the inventions at issue, skepticism, the commercial success and industry praise of products embodying the claimed inventions (including Serendia's domestic industry products), copying, and/or unexpected results.

II. LEVEL OF ORDINARY SKILL IN THE ART

As an initial matter, Serendia notes that Respondents' final invalidity contentions fail to specify the level of ordinary skill upon which they rely. This is yet another reason why Respondents final invalidity contentions are deficient and fail to sufficiently inform Serendia of the bases for Respondents' invalidity arguments. Regardless of Respondents' deficiencies, Serendia discusses the level or ordinary skill in the art below.

A POSITA for the Needle Assembly Patents would typically have (1) seven to ten years of experience with developing and/or using of tissues, and (2) a related graduate engineering degree or M.D. and may have worked as part of a multidisciplinary team and drawn upon not only his or her own skills, but also would have taken advantage of certain specialized skills of others on the team when solving a technical problem.

A POSITA for the Na Effect Patents would typically have (1) 7-10 years of experience with developing and/or using treatment systems for delivery of electromagnetic radiation energy to skin or other tissues, and (2) a related graduate engineering degree or M.D. and may have worked as part of a multidisciplinary team and drawn upon not only his or her own skills, but also would have taken advantage of certain specialized skills of others on the team when solving a technical problem.

For each POSITA, the term "electromagnetic radiation energy" encompasses delivering electric current through electrodes inserted into tissue.

Serendia's contentions regarding the level of ordinary skill at this stage are preliminary, and Serendia reserves the right to rely on additional or different definitions of the level of ordinary skill, including based on expert discovery. Further, the experience and education levels may vary between persons of ordinary skill: a higher level of education or skill might make up for less experience, and vice versa.

[redacted]

[redacted]

[redacted]

[redacted]

[redacted]

[redacted]

[redacted]

[redacted]

[redacted]

[redacted]

[redacted]

[redacted]

[redacted]

[redacted]

[redacted]

[redacted]

[redacted]

[redacted]

[redacted]

[redacted]

[redacted]

[redacted]

[redacted]

[redacted]

[redacted]

[redacted]

[redacted]

[redacted]

[redacted]

[redacted]

[redacted]

[redacted]

[redacted]

[redacted]

[redacted]

[redacted]

[redacted]

[redacted]

[redacted]

[redacted]

[redacted]

[redacted]

[redacted]

[redacted]

[redacted]

[redacted]

[redacted]

[redacted]

[redacted]

[redacted]

[redacted]

[redacted]

[redacted]

[redacted]

IV. AIA STATUS

A. The Asserted Claims of the ’379, ’444, ’774, and ’812 Patents Are Entitled To A Priority Date Before March 16, 2013

Respondents’ invalidity contentions assert that the ’836, ’379, ’444, ’774, and ’812 patents are subject to the first inventor to file provisions of the AIA. *See* Respondents’ July 10, 2023 Invalidity Contentions, at 17-27. To support this assertion, Respondents’ invalidity contentions make two primary arguments: 1) that the applicant “checked the box” for the 37 CFR 1.55 or 1.78 statement (indicating that the filing was subject to AIA first to file provisions) in the respective Application Data Sheets for the applications for the ’379, ’444, ’774, and ’812 Patents (*see id*. at 14-15); and 2) that the “’836, ’379 and ’444 Patents claim or claimed new matter added after March 16, 2013” (*see id*. at 15-21). Neither of these arguments establish that the AIA first to file provisions apply to any of the Asserted Patents.

Regardless of what “box” the applicant checked during prosecution of the ’379, ’444, ’774, and ’812 Patents, the determining factor for assessing whether post-AIA law applies to the Asserted Patents is whether the claims at issue have an effective filing date prior to March 16, 2013. *See Blue Calypso, LLC v. Groupon, Inc*., 815 F.3d 1331, 1341 (Fed. Cir. 2016) (“Because the claims at issue in this case have effective filing dates prior to March 16, 2013, we apply the pre-AIA § 102(b).”). Indeed, Respondents do not contest that the Asserted Claims of the ’536 patent, which is the first patent issued in the patent family that includes the ’774 and ’812 patents, is entitled to pre-AIA status. And Respondents identify no new disclose that was added to the

[redacted]

application for the ’774 or ’812 patent, let alone how such disclosure is needed to support any Asserted Claim. Accordingly, there is no genuine dispute that the Asserted Claims of the ’774 and ’812 patents are entitled to pre-AIA status.

Similarly, Respondents do not contest that the ’836 patent, which is the first patent issued in the patent family that includes the ’379 and ’444 patents, was never identified as a post-AIA patent. And Respondents identify no new discloser that was added to the application for the ’379 or ’444 patent, let alone how such disclosure is needed to support any Asserted Claim. Accordingly, there is no genuine dispute that the Asserted Claims of the ’379 and ’444 patents are entitled to the same AIA status as the ’836 patent. As explained belove, that is pre-AIA status.

This standard is also explained in the MPEP:

> ***The changes to 35 U.S.C. 102 and 103 in the AIA do not apply to any application filed before March 16, 2013***. Thus, any application filed before March 16, 2013, is governed by pre-AIA 35 U.S.C. 102 and 103 (i.e., the application is a pre-AIA first to invent application)…. Similarly, a PCT application filed under 35 U.S.C. 363 before March 16, 2013, is subject to pre-AIA 35 U.S.C. 102 and 103, regardless of whether the application enters the national stage under 35 U.S.C. 371 before or after March 16, 2013.

MPEP § 2159.01 (Applications Filed Before March 16, 2013). Thus, regardless of what “box” the applicant checked during prosecution of the ’379, ’444, ’774, and ’812 Patents, these patents are governed by the corresponding pre-AIA framework because they have an effective filing date prior to March 16, 2013. Furthermore, examination of applications under post-AIA statutes is *less* favorable to the applicant, so the Applicants for the ’379, ’444, ’774, and ’812 Patents would not have gained any advantage from examination under the post-AIA framework.

Furthermore, the prosecution history confirms the patents’ pre-AIA status and that Respondents improperly rely on “box checking” without considering the prosecution as a whole. During prosecution of the ’536 patent (which Respondents do not dispute is entitled to pre-AIA status), the Examiner expressly stated that the application was “being examined under the pre-AIA

first to invent provisions" and applied the pre-AIA statutes. SERENDIA-00001596 (box) & SERENDIA-00001597 ("The present application is being examined under the pre-AIA first to invent provisions."). Respondents fail to identify subject matter claimed in the '774 and '812 patents that was not claimed in the '536 patent and was allegedly added post-AIA. The Respondents who filed IPR petitions also recognized that the '536, '774, and '812 patents were entitled to pre-AIA status, applying the pre-AIA statutes. SERENDIA-00011168, SERENDIA-00013659, SERENDIA-00009463.

During prosecution of the '836 patent (which Respondents do not dispute is entitled to pre-AIA status), the Examiner expressly stated—over and over again—that the application was "being examined under the pre-AIA first to invent provisions" and applied the pre-AIA statutes despite the box in each office action for "AIA (First Inventor to File) Status" being marked "No." SERENDIA-00000251 (box) & SERENDIA-00000252 ("The present application is being examined under the pre-AIA first to invent provisions."), SERENDIA-00000293 (box) & SERENDIA-00000294 ("The present application is being examined under the pre-AIA first to invent provisions."), SERENDIA-00000324 (box) & SERENDIA-00000325 ("The present application is being examined under the pre-AIA first to invent provisions."), SERENDIA-00000434 (box) & SERENDIA-00000435 ("The present application is being examined under the pre-AIA first to invent provisions."). Respondents fail to identify subject matter claimed in the '379 and '444 patents that was not claimed in the '836 patent and was allegedly added post-AIA.

Indeed, the Respondents who filed IPR petitions applied the pre-AIA statutes and did not dispute the pre-AIA status of the patents, and the Board applied the pre-AIA statutes in denying institution. SERENDIA-00000475 ("The '836 patent claims priority to an application filed on June 14, 2012. Ex. 1001, code (22). Petitioner applies the pre-AIA version of § 103. Pet. 6. Patent

Owner does not dispute that the pre-AIA version of § 103 applies. We consequently also apply the pre-AIA version of § 103."); SERENDIA-00000823 ("The '379 patent claims priority to an application filed on June 14, 2012. Ex 1001, code (63). Petitioner applies the pre-AIA version of § 103. Pet. 6. Patent Owner does not dispute that the pre-AIA version of § 103 applies. We consequently also apply the pre-AIA version of § 103.").

B. The Asserted Claims of the '836, '379, '444 Patents Are Supported By Pre-March 16, 2013 Disclosure

As discussed above, *supra* Section IV.B, Respondents' contentions that the '836, '379 and '444 Patents contain new subject matter that was not disclosed in the applications to which these patents claim priority are wrong. Notably, each of the examples in Respondents' invalidity contentions demonstrate only that the applicant used interchangeable terminology throughout the applications. For example, Respondents' invalidity contentions argue that:

> In the '836 Family Priority Documents, the Applicant made clear that merely "applying energy (i.e., heat)" or "raising temperature" alone would not be sufficient to achieve the alleged "Na Effect." Rather, the energy (i.e., heat) has to be applied "to, in principle, *make a state of coagulation*" (emphasis added). In contrast, the Applicant disclosed in the '836 Patent that the "term 'to raise temperature' is *used synonymously* with 'applying energy to achieve coagulation' where applying electrically energy to the body region may effectively raise the body region temperature." (emphasis added). In doing so, the Applicant essentially added new matter of "apply[ing] energy" or "rais[ing] temperature" as a necessary and sufficient condition for the alleged "Na Effect." This matter was never disclosed prior to the filing of the '930 Application that issued as the '836 Patent.

See Respondents' July 10, 2023 Invalidity Contentions, at 23-24. But a comparison of the earlier application and the '895 Patent specification shows that Respondents' arguments are baseless. The text from the two specifications that Respondents identify are nearly identical, with the applicant merely changing the word "to cook" to "to raise temperature":

[redacted]

'695 PCT Application[2]	'895 Patent
If energy is applied to the skin's dermis, the shape that affects the thick skin varies depending on the amount of energy that is infused; generally this process is divided into stages, including carbonization, vaporization, and coagulation.	When energy is applied to dermis, the effect on the dermis may differ based on the amount of energy applied and the effect is generally divided into three phenomena: carbonization, vaporization, and coagulation. The present invention improves skin condition by primarily using coagulation.
The Na Effect of the present invention forms, in principle, a bicoagulation state, and may be expressed as "to burn," "to apply heat," or "***to cook***," however, there are aspects that cannot be accurately expressed by any one general expression.	The three phenomena: carbonization, vaporization, and coagulation can also be expressed as "to burn", "to apply heat", "***to raise temperature***", although none of these phrases are exact.
However, in ***the present invention, the expression "to cook" is believed to comparatively well show the meaning "applying energy to, in principle, make a state of coagulation***," therefore the expression "to cook" is used to mean "applying energy to, in principle, make a state of coagulation."	***The invention may configured "to raise temperature" by applying energy to achieve coagulation***.
The meaning of "to cook" in the detailed description has a strong meaning of applying energy, however ***"to cook" recited in the patent claims of the present invention was used to specifically mean "applying energy to, in principle, make a state of coagulation***.	In the present invention ***the term "to raise temperature" is used synonymously with "applying energy to achieve coagulation"*** where applying electrically energy to the body region may effectively raise the body region temperature. The present invention was created to resolve above Mentioned problems.

This minor difference in the English translations falls far short of demonstrating any addition of new matter. The substantive disclosure is the same. Respondents' suggestion that the Korean priority documents do not disclose applying energy / heat to achieve coagulation is wrong. As shown above, a review of the plain language of the '695 PCT and '895 Patent specification confirms that no new material was added to the later filings, and that Respondents are merely quibbling

[2] Respondents identify the '695 PCT Application with the cited language as RA0006727–RA0006780 at RA0006736– RA0006737; RA0006782– RA0006823 at RA0006788–RA0006789.

over minor clarifications of terminology. Additionally, while Respondents wrongly argue that "the Applicant essentially added new matter of 'apply[ing] energy' or 'rais[ing] temperature' as a necessary and sufficient condition for the alleged 'Na Effect'" (*see* Respondents' July 10, 2023 Invalidity Contentions, at 23). This is disclosed in the Korean applications, as shown above.

Respondents' invalidity contentions present three other examples of "new" material which are equally deficient. For example, Respondents point to a September 23, 2013 filing of the '930 Application which included claims that required a "heated area" around needles. *See* Respondents' July 10, 2023 Invalidity Contentions, at 24-25. Respondents then assert that "the Applicant claimed the *heated area, not the coagulation area*, around each needle as embodying the 'Na Effect'" and thus "[t]hese claims rely on the new matter disclosed for the first time when the Applicant filed the application on September 23, 2013." *Id*. at 25 (emphasis in original). But once again, Respondents are merely quibbling over terminology which overlaps in meaning and which is used interchangeably in the respective specifications. And regardless, the final claims for each of the '836, '379 and '444 Patents include the "coagulation" and "energy" terminology expressly disclosed in the prior applications (and are thus not claiming any "new" subject matter).

Respondents make similar deficient arguments related to a "Supplemental Preliminary Amendment" filed on September 24, 2013. *See* Respondents' July 10, 2023 Invalidity Contentions, at 25-26. There, Respondents point to new proposed claims referencing an increase in an "energy field" (rather than coagulation) as purportedly "new matter disclosed for the first time." *Id*. But the application of an energy field was expressly disclosed in the prior applications, particularly to achieve the result of coagulation. *See* '695 PTC App. At [10]-[11] ("However, in the present invention, the expression 'to cook' is believed to comparatively well show the meaning "***applying energy to***, in principle, make a state of coagulation,' therefore the expression 'to cook'

[redacted]

is used to mean '***applying energy to***, in principle, make a state of coagulation.'"); *see also* RA0006727– RA0006780 at RA0006736– RA0006737; RA0006782– RA0006823 at RA0006788– RA0006789.

Respondents' July 10, 2023 Final Invalidity Contentions add one additional argument: that the applicant "***deliberately mistranslate[ed]***" the above paragraph from the '695 PCT Application which used the term "to cook," seeking to change the scope of the term and the disclosure itself by changing it to "to raise temperature." Respondents' July 10, 2023 Final Invalidity Contentions at 20-22. As Respondents argue, "Serendia's own document shows that coagulation in the skin tissue does not occur unless the temperature of the tissue is raised to 58–85 °C." *Id*. at 22 (citing SERENDIA-00017306 at -317). Thus, according to Respondents, merely raising temperature is insufficient to achieve the desired Na Effect, and the change in terminology between the '695 PCT Application and the final '836 specification was a substantive change in scope of the disclosure. *Id*. at 20-22. Respondents are wrong. As shown by the very text Respondents cite, the '836 specification does not merely state that *any* raising of the temperature is sufficient to achieve the desired results, the specification states that "[i]n the present invention he[sic] term 'to raise temperature' is used synonymously with '***applying energy to achieve coagulation***' where applying electrically energy to the body region may effectively raise the body region temperature." *Id*. at 23 (citing '836 Patent, 2:62–3:1). Thus, the applicant explained that the term "to raise temperature" was being used to mean "applying energy to achieve coagulation," i.e., raising temperature sufficiently to do so. This describes the same concept using better English words as using the term "to cook" or "to braise" to mean "applying energy to, in principle, make a state of coagulation" in the '695 PCT Application. In addition, the certified translation that Serendia produced of Korean priority application 10-2011-0057691 confirms that Respondents are at best relying on mere word choices during translation and at worst manufacturing a difference to support

their contentions. That translation makes clear that "to raise temperature" and "cook" both refer to applying heat to create a coagulated state. SERENDIA-00027535, ¶¶ 9-10, 11, 17-18.

Once again, a review of the plain language of the '695 PCT and '895 Patent specification confirms that no new material was added to the later filings, and that Respondents are merely quibbling over minor clarifications of terminology. Thus, Respondents' additional arguments presented in their July 10, 2023 Final Invalidity Contentions are without merit.

Furthermore, even if Respondents were correct that new matter was added to the '836, '379, and '444 Patents (and they are not), this is not a basis to apply post-AIA framework when assessing the validity of the claims:

> ***Additionally, adding claims after March 16, 2013 in an application filed before March 16, 2013 via an amendment which contains new matter does not make the changes to 35 U.S.C. 102 and 35 U.S.C. 103 in the AIA applicable to the application*** because 35 U.S.C. 132(a) prohibits the introduction of new matter into the disclosure. If new matter is added via amendment, claims directed to the new matter will be rejected under pre-AIA 35 U.S.C. 112, first paragraph. See MPEP § 608.04.

MPEP § 2159.01 (Applications Filed Before March 16, 2013). As explained in the MPEP, to the extent new matter was added in the later applications, "claims directed to the new matter will be rejected under pre-AIA 35 U.S.C. 112" (rather than treating the application under the post-AIA 102/103 framework).

Respondents fall far short of meeting their high burden to show invalidity or unenforceaibltiy for alleged addition of "new matter." "The question whether new matter has been added to an application is a question of fact." *Commonwealth Sci. & Indus. Research Org. v. Buffalo Tech. (USA), Inc.* (hereinafter "*CSIRO*"), 542 F.3d 1363, 1380 (Fed. Cir. 2008). The fact that the Patent Office permitted the substitute specification "without objection 'is entitled to an especially weighty presumption of correctness' in a subsequent validity challenge based on the alleged introduction of new matter." *Id.*; *see also Brooktree Corp. v. Advanced Micro Devices, Inc.*, 977 F. 2d 1555,

1574 (Fed. Cir. 1992) ("Whether particular technological information is 'new matter' depends on the facts of the case: the nature of the disclosure, the state of the art, and the nature of the added matter. A patent is presumed valid, 35 U.S.C. § 282, and this presumption is based in part on the expertise of patent examiners presumed to have done their job. This presumption, which may be viewed as a presumption of administrative correctness, as applied to a new matter determination was discussed by our predecessor court, which stated that '"the fact that the Patent Office allows ... an amendment without objection thereto as new matter (within the meaning of Title 35 U.S.C. § 132) is entitled to an especially weighty presumption of correctness."'") (citations omitted); *Pregis Corp. v. Doll*, 698 F. Supp. 2d 584, 598-99 (E.D. Va. 2010). Accordingly, Respondents "therefore not only must overcome the clear error standard, but it must do so in the face of a presumption of validity based on the PTO's issuance of the patent despite the amendments." *CSIRO*, 542 F.3d at 1380. Respondents must meet this high burden to show lack of written description; they cannot skirt it by raising procedural objections to how the Patent Office applied § 132. *H.W.J. Designs for Agribusiness, Inc. v. Rethceif Enter.* (E.D. Cal. Sept. 26, 2018). Nor is the alleged "new matter" issue an issue of claim construction. *See, e.g., 0912139 B.C. Ltd. v. Rampion USA Inc.*, No. C18-1464JLR, 2019 WL 3426058, at *11 (W.D. Wash. July 30, 2019) (declining to consider a "new matter" argument because it "boil[ed] down to invalidity contentions, not claim construction arguments"); *Reiffin v. Microsoft Corp.*, No. C-98-0266 VRW, 2002 WL 31268220, at *6-7 (Apr. 30, 2002) ("Courts do not make a determination whether a patent contains new matter at the claim construction stage.").

In sum, because the Asserted Patents all have an effective filing date prior to March 16, 2013, the Asserted Patents are governed by the pre-AIA framework.

V. RESPONDENTS' IDENTIFICATION OF PRIOR ART

Respondents' July 10, 2023 invalidity contentions included reference to ***eleven*** different prior art references, as well as ***three*** different systems they contend are prior art. *See* Respondents' July 10, 2023 Invalidity Contentions, at 6-9. Although Respondents refer to these as "exemplary references" (*id*. at 6), they fail to even attempt to compare any other references to the Asserted Claims. Therefore, Serendia considers waived any contention based to any reference not charted in Respondents' July 10, 2023 invalidity contentions.

Moreover, while Respondents identify three purported "Prior Art Systems," Respondents' invalidity contentions fail to establish ***how*** any of the cited "System Prior Art" qualifies as prior art under pre-AIA 102. Specifically, Respondents' invalidity contentions fail to establish any basis for concluding that those systems are prior art. Respondents have expressly chosen to rely on the systems themselves, rather than published information about those systems that might qualify as prior art on other bases, and thus must establish that the systems themselves meet the requirements to constitute prior art under U.S. law. Respondents to date have identified no such information. Serendia reserves the right to respond if Respondents are permitted to identify information that they contend supports a finding that the systems that they have identified constitute prior art under U.S. law.

VI. 35 U.S.C. §§ 102 AND 103

The Asserted Patents, and each and every one of their claims, are presumed to be valid. *See* 35 U.S.C. § 282. Accordingly, Respondents must prove—on a claim-by-claim basis and by clear and convincing evidence—that specific claims of the Asserted Patents are invalid. *Microsoft Corp. v. i4i Ltd. P'ship,* 564 U.S. 91, 95 (2011). To anticipate a claim, a reference must disclose each and every claim limitation as it is "arranged" in the claim. *See Net MoneyIN, Inc. v. VeriSign,*

Inc., 545 F.3d 1359, 1371 (Fed. Cir. 2008) (holding that "unless a reference discloses within the four corners of the document not only all of the limitations claimed but also all of the limitations arranged or combined in the same way as recited in the claim, it cannot be said to prove prior invention of the thing claimed and, thus, cannot anticipate under 35 U.S.C. § 102.").

A reference cannot anticipate if it is "ambiguous as to whether it disclose[d]" the respective claim limitations. *Wasica Finance GmbH v. Continental Automotive Systems Inc.*, 853 F.3d 1272 (Fed. Cir. 2017). And anticipation cannot be established by "multiple, distinct teachings that the artisan might somehow combine to achieve the claimed invention." *Microsoft Corp.*, 878 F.3d at 1069. Finally, when the reference does not disclose that the drawings are to scale and is silent as to dimensions, an accused infringer cannot infer dimensions to demonstrate invalidity. *See Hockerson-Halberstadt, Inc. v. Avia Group Int'l*, 222 F.3d 951, 956, (Fed. Cir. 2000); *Nystrom v. TREX Co.*, 424 F.3d 1136, 1149 (Fed. Cir. 2005) ("the speculative modeling premised on unstated assumptions in prior art patent drawings cannot be the basis for challenging the validity of claims reciting specific dimensions not disclosed directly in such prior art."); *see also In re Wright*, 569 F.2d 1124, 1127 (C.C.P.A. 1977) ("Absent any written description in the specification of quantitative values, arguments based on measurement of a drawing are of little value."). An element may be inherently disclosed only if it "is necessarily present, not merely probably or possibly present, in the prior art." *Guangdong Alison Hi-Tech Co. v. Int'l Trade Comm'n*, 936 F.3d 1353, 1364 (Fed. Cir. 2019); *see also Schering Corp. v. Geneva Pharms.*, 339 F.3d 1373, 1377 (Fed. Cir. 2003).

To demonstrate that a patent claim is obvious in view of a combination of references, a challenger must show by clear and convincing evidence that a POSITA would have been motivated to combine the references. *See, e.g., Intelligent Bio-Sys., Inc. v. Illumina Cambridge Ltd.*, 821

F.3d 1359, 1368 (Fed. Cir. 2016). Moreover, a POSITA must have a "reasonable expectation of success" when combining and/or modifying the cited references for a proper determination of obviousness. *See In re O'Farrell*, 853 F.2d 894, 904 (Fed. Cir. 1988). And while the burden of proof remains the same regardless of the reference used, "it may be harder to meet the clear and convincing burden when the invalidity contention is based upon the same argument on the same reference that the PTO already considered." *Sciele Pharma Inc. v. Lupin Ltd.*, 684 F.3d 1253, 1260 (Fed. Cir. 2012).

Also, any "petitioner in an inter partes review of a claim in a patent that results in a final written decision under [35 U.S.C. § 318(a)], or the real party in interest or privy of the petitioner, may not assert . . . in a proceeding before the International Trade Commission under section 337 of the Tariff Act of 1930 that the claim is invalid on any ground that the petitioner raised or reasonably could have raised during that inter partes review." 35 U.S.C. § 315(e)(2).

Despite bearing this burden of proving invalidity by clear and convincing evidence, Respondents' invalidity contentions do not demonstrate of how any claim or claim element is allegedly disclosed or rendered obvious by Respondents' cited references, instead relying on bare citations only, with little to no detail or analysis. Respondents have therefore failed to place Serendia on notice of its invalidity contentions. Serendia reserves the right to supplement these contentions to respond to any amendments or supplementations to Respondents' invalidity contentions, including in expert reports.

A. The '836, '379, and '444 Patents

1. Alleged Prior Art References

Respondents' invalidity contentions for the '836, '379, and '444 Patents fail to specify how any single prior art reference describes each and every limitation of any Asserted Claim of the '836, '379, or '444 Patents, as arranged in the claim. Respondents' invalidity contentions also fail

[redacted]

to specify how each and every limitation of any asserted claim of either the ’836, ’379, or ’444 Patents would have been obvious to a POSITA based on any single alleged prior art reference or any combination of references. Accordingly, Respondents have not shown that any Asserted Claim of the ’836, ’379, or ’444 Patents is anticipated or rendered obvious by any of the purported prior art patents, patent applications, and/or publications and purported prior art systems Respondents identify in their contentions.

2. Anticipation and Rebuttal to Respondents’ Invalidity Exhibits

Respondents assert that the alleged prior art references anticipate or render obvious, alone or in combination with any of the prior art references its charted, one or more claims of the ’836, ’379, or ’444 Patents. *See* Respondents’ Jul. 10, 2023 Invalidity Contentions, at 27:

> Respondents identify in the attached Prior Art Invalidity Charts (attached hereto as Exhibits A-01 to F-12 [*sic*]), prior art references that anticipate the Asserted Claims under post-AIA and/or pre-AIA provisions of at least 35 U.S.C. §§ 102 (e.g., pre-AIA 102 (a), (b), (e), and/or (g)), either expressly or inherently, and/or render obvious the Asserted Claims under 35 U.S.C. § 103 either alone or in combination with other references.

But Respondents do not explain the basis for its assertion, other than to incorporate by reference Exhibits A-01 to F-12 to their July 10, 2023 Invalidity Contentions. *See id*. Moreover, as discussed above, in Respondents’ Amended Notice of Prior Art, Respondents removed the below prior art references for the ’836, ’379, and ’444 Patents:

- U.S. 8,900,231 (“Kreindel”)
- KR 200441552 (“Lee”)

Serendia thus considers any contentions related to these withdrawn references as waived.

With respect to the remaining charted references, Respondents provide only bare citations and reproduced excerpts of the various references with little to no explanation or context for the citations or excerpts and no explanation of any specific combination of references or any reason

why the POSITA would combine one reference with another reference. Respondents fail to assert anticipation with any specificity in their contentions and these claim charts, and further fails to make any *prima facie* case of obviousness in their contentions and these claim charts. In sum, Respondents have not shown that any of the asserted '836, '379, and '444 Patent claims are invalid as anticipated or obvious.

As explained more fully below, Respondents' exhibits do not adequately set forth any grounds that would overcome the presumption of validity of the Asserted Claims of '836, '379, and '444 Patent. Serendia identifies exemplary claim limitations that either are not disclosed in a single reference or would not have been obvious to a POSITA in view of the reference or in combination with other references. Serendia's identification of any given claim limitation as not being disclosed or obvious should not be construed as an admission that other claim limitations are present in the purported prior art or would have been obvious to a POSITA in view of the purported prior art.

a. Respondents' "Inherency" Contentions

Recognizing that its cited prior art references do not literally disclose certain key claim limitations, Respondents' July 10, 2023 Final Invalidity Contentions argue that the following limitations are nevertheless "inherently" disclosed:

- "radio frequency (RF) generation module … configured to provide an Alternating Current (AC) RF signal to the plurality of electrodes" ('836 Patent, claims 1 and 14);
- "provide an RF signal with oscillating current to the plurality of electrodes to apply energy to body segments around each electrode rather than to body segments between the electrodes" ('379 Patent, claim 1); and
- "provide an RF signal with oscillating current to the plurality of electrodes" "that causes"/"to cause" "energy to be substantially applied to body segments around each electrode" ('444 Patent, claim 1).

See Respondents' July 10, 2023 Final Invalidity Contentions at 32-40.

Respondents are wrong. "An element may be inherently disclosed only if it 'is 'necessarily present,' not merely probably or possibly present, in the prior art.'" *Guangdong Alison Hi-Tech Co. v. Int'l Trade Comm'n*, 936 F.3d 1353, 1364 (Fed. Cir. 2019) (citing *Rosco, Inc. v. Mirror Lite Co*., 304 F.3d 1373, 1380 (Fed. Cir. 2002) (quoting *Trintec Indus., Inc. v. Top-U.S.A. Corp*., 295 F.3d 1292, 1295 (Fed. Cir. 2002)). Respondents' new inherency arguments fail as a matter of law because they have not shown that the elements are "necessarily present." Indeed, in several cases, the prior art Respondents' rely upon directly contradicts Respondents' inherency arguments, demonstrating alternatives to the limitations Respondents now argue are necessarily present.

For example, Respondents' July 10, 2023 Final Invalidity Contentions assert that each of of Mehta, Hantash '718 PCT, Ganz, Manstein, Miratone, and ScarLet discloses applying radio frequency (RF) energy, and that "[i]t was well-known in the art that a radio frequency signal is a high-frequency (30 KHz to 300 MHz) alternating current (AC). *Id*. at 33 (citing *Radiofrequency Catheter Ablation for Cardiac Tachyarrhythmias*, Manolis, A.S., et al., Ann Intern Med. (1994) 121:452-461 at 452. Thus, according to Respondents' July 10, 2023 Final Invalidity Contentions, "providing a radio frequency (RF) signal to the electrodes, each of Mehta, Hantash '718 PCT, Ganz, Manstein, Miratone, and ScarLet inherently discloses providing an Alternating Current (AC) RF signal to the plurality of electrodes under Complainant's and Staff's proposed construction of 'Alternating Current (AC) RF signal.'" *Id*. at 36.[3]

But as discussed in U.S. 6,766,202 ("Underwood") – a *reference Respondents cite as prior art* – RF energy may also be applied as non-AC "voltage pulses" made at a rate within the radio frequency range, rather than via alternating current. *See* Underwood at 6:42-52 ("the voltage is

[3] Respondents' July 10, 2023 Final Invalidity Contentions further assert that each of Mehta, Hantash '718 PCT, Ganz, Manstein, Miratone, and ScarLet inherently disclose bipolar electrodes for the same reasoning. *Id*. at 35.

usually delivered in a series of ***voltage pulses or alternating current*** of time varying voltage amplitude with a sufficiently high frequency (e.g., on the order of 5 kHz to 20 MHz)"). Thus, because the application of RF energy purportedly disclosed in Respondents' prior art references could be a series of non-AC "voltage pulses," rather than the AC required by the claims, these limitations are not "necessarily present," but are instead merely "possibly present," which means Respondents' inherency arguments for these limitations fail as a matter of law. *See Guangdong Alison Hi-Tech Co.,* 936 F.3d at 1364.[4]

And while Respondents' Respondents' July 10, 2023 Final Invalidity Contentions argue that "Complainant has also asserted that an RF signal is an 'alternating current." (*see* Respondents' July 10, 2023 Final Invalidity Contentions at 33), the very disclosure Respondents' cite demonstrates that Serendia was identifying express disclosure of ***alternating current*** within the infringing devices, and not relying on the mere fact that the Accused Products apply RF energy as satisfying the alternating (or oscillating) current limitations:

> The bipolar modality of RF delivery utilizes two electrodes, a positive and negative; alternating current flows back and forth between these points. The effective field depth, and thus the depth of tissue heated is determined by the distance of electrodes in relation to one another, although the degree of heating is still determined by the electrical parameters of the EMF.

Id. (citing Complainant's Initial Infringement Contentions, Ex. 16, at 17; Ex. 22, at 11).

---

[4] Indeed, Respondents Lutronic, SHEnB, Rohrer, Ilooda, Cutera, Jeisys, Cynosure, and EndyMed all assert that their "RF" microneedle accused products do not satisfy the alternating (or oscillating current) radio frequency limitations of the Asserted Claims, despite admitting that their products deliver RF energy during treatment, directly contradicting the assertions in Respondents' invalidity contentions. *See, e.g*., June 14, 2023 Interrogatory Responses.

Respondents further argue that the limitations regarding coagulation / energy occurring around each electrode are inherently disclosed because this behavior is "inherent due to the physics of thermodynamics." *See, e.g.*, Respondents' July 10, 2023 Final Invalidity Contentions at 35. As Respondents' argue:

> As the current travels from the positive electrode to the negative electrode of the pair, the heating starts next to the positive electrode, and takes time before the heating between the electrodes reaches a temperature sufficient to cause coagulation. Thus, whenever current is applied to a bipolar pair of electrodes, coagulation would necessarily start around each individual electrode before connecting between the electrode.

Id. But this argument is directly contradicted by each of Respondents' non-infringement contentions, each of which argue that their Accused Products do ***not*** satisfy these corresponding coagulation / energy limitations because their bipolar RF treatment products purportedly do not apply coagulation / energy around each electrode, but instead apply the coagulation / energy uniformly between each electrode.

Moreover, Respondents' own cited prior art demonstrates coagulation / energy does not "necessarily" occur around each electrodes (rather than between them). For example, Ganz explains that the focus of its invention is ***not*** coagulation, but instead the generation of perforations in the skin to prompt a more aggressive wound healing response. Ganz, at [0006]. Ganz thus instead discloses removing the tissue around the electrodes and creating zones of coagulation around those holes, "***rather than merely imparting coagulations into the skin***," which Ganz criticizes as inferior. *Id*. at [0032] (emphasis added).

Moreover, Hantash 718 actually teaches away from applying energy / coagulation around the needles rather than between them, as Figures 4 through 9 show treatment patterns which extend between the treatment electrodes:

[redacted]

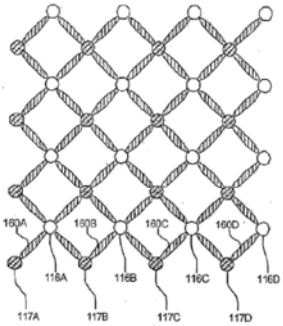

Figure 4A

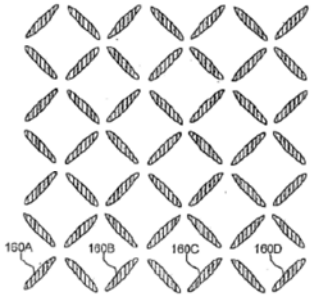

Figure 4B

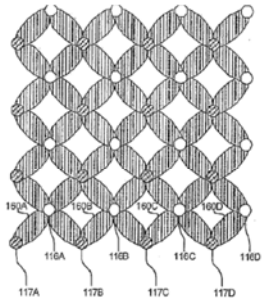

Figure 5A

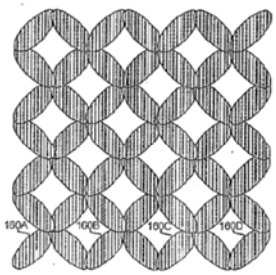

Figure 5B

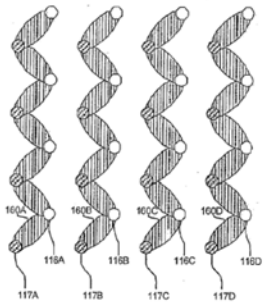

Figure 6A

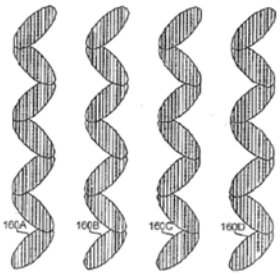

Figure 6B

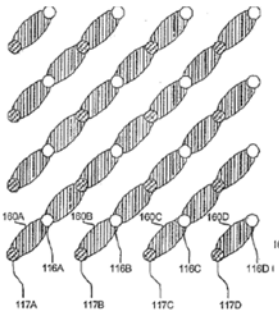

Figure 7A

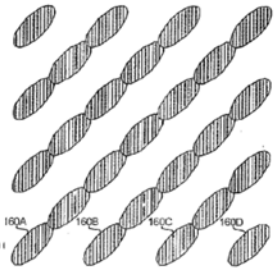

Figure 7B

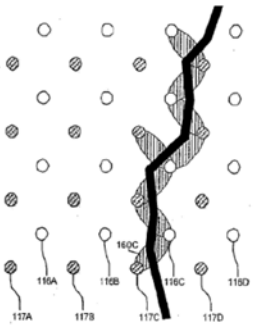

Figure 8A

Figure 8B

Figure 9A

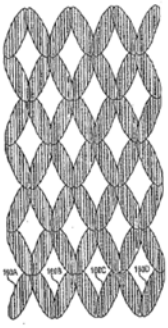

Figure 9B

Additionally, Mehta was already considered during prosecution of the Asserted Patents, as well as during the respective IPRs, with the Examiner and PTAB concluding that these limitations were not disclosed. *See, e.g.,* '444 Patent Notice of Allowance ("In the Mehta reference (Pub. No.: US 2010/0204695 A1) ***the energy seemed to flow between bipolar needles (e.g. see figure 13), not around individual needles***."); IPR2022-00594 ('836 Patent IPR Institution Decision) at 25 (finding "***Petitioner has not reasonably shown that Mehta discloses or suggests a 'plurality of***

electrodes configured to cause coagulation around each electrode rather than coagulating between the electrodes.'"); IPR2022-00593 ('379 patent IPR Institution Decision) at 24 ("Because Mehta discloses and depicts fractional lesions (that is, coagulation} extending from one electrode to another electrode in a bipolar pair-or ***continuously between the electrodes***-Petitioner has not shown a reasonable likelihood that Mehta discloses or suggests a 'apply energy to body segments around each electrode rather than to body segments between the electrodes.'").

Indeed, Mehta teaches away from applying energy / coagulation around each electrode (rather than between them), as shown in the below figures:

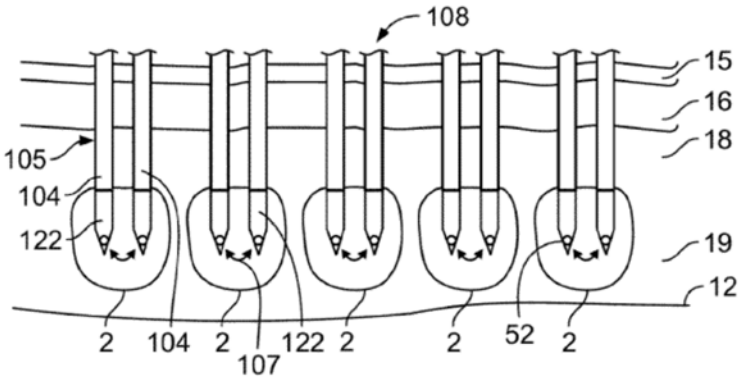

FIG. 13A

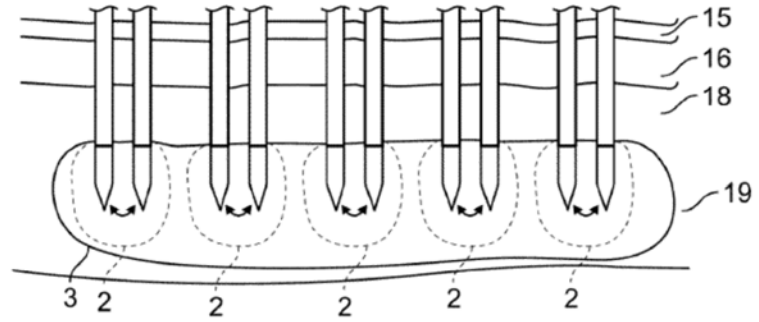

FIG. 13B

Likewise, the Miratone system references Respondents rely upon expressly teach away from focusing coagulation / energy around each electrode (rather than between them). For example, Berube *et al*. shows the Miratone system generating energy *between* the electrode pairs:

[redacted]

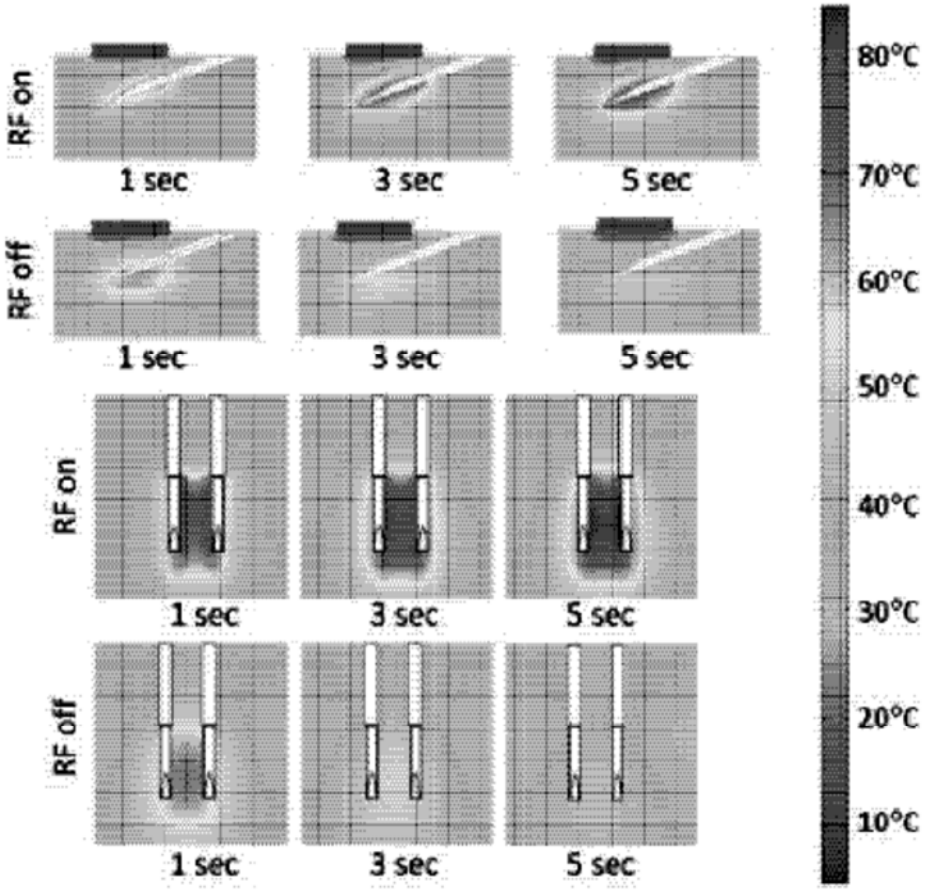

Fig. 5. Thermal profiles at 1, 3, and 5 seconds during and after RF application for a target temperature of 70°C (top, cross-section along one needle; bottom, plane containing both needles).

Similarly, Alexiades *et al*. shows the Miratone system electrode configuration with the energy distribution once again extending *between* the electrode pairs:

[redacted]

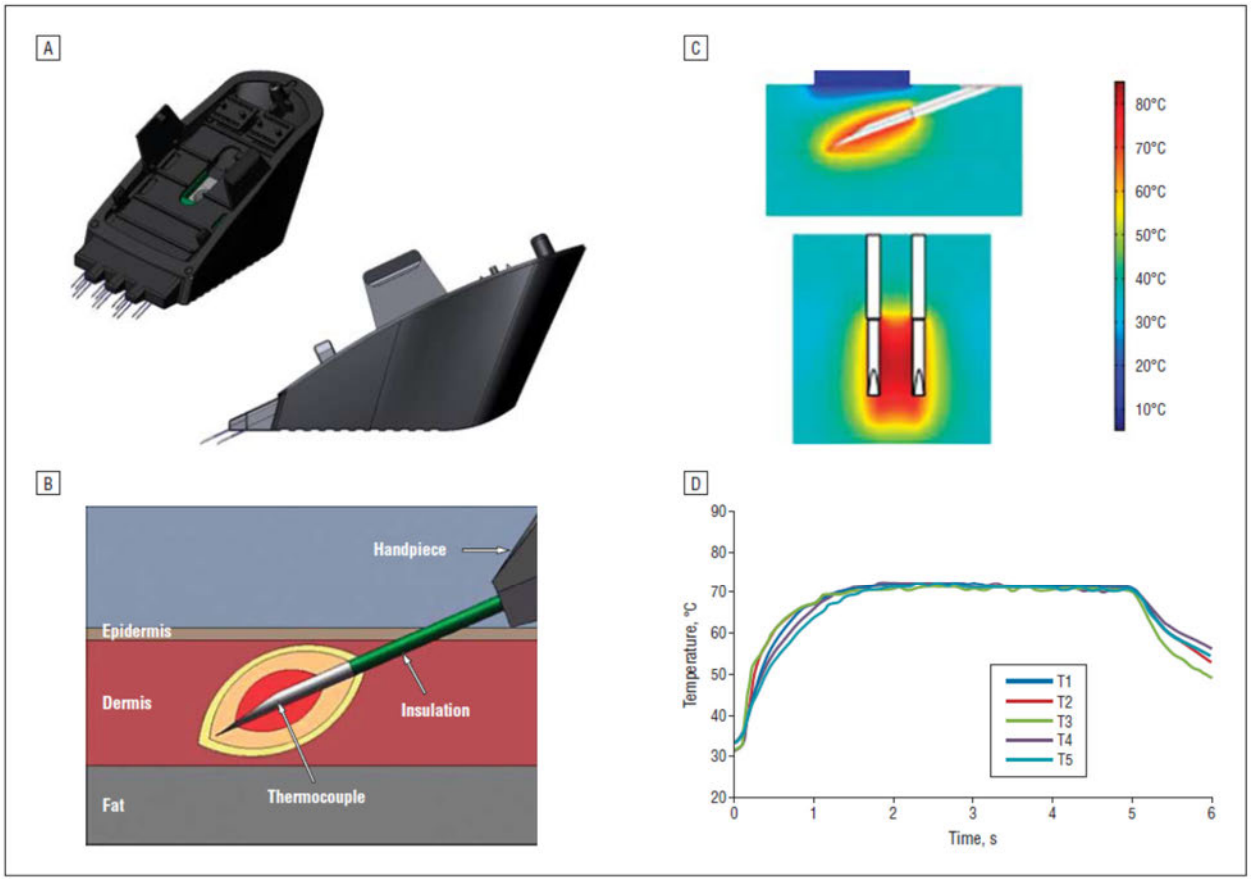

Alexiades *et al*., FIG 1.

Underwood also shows current flowing both around and between electrodes, disclosing only that this current is "generally confined to the region shown" which includes regions extending laterally from the electrodes and the regions between the electrodes:

[redacted]

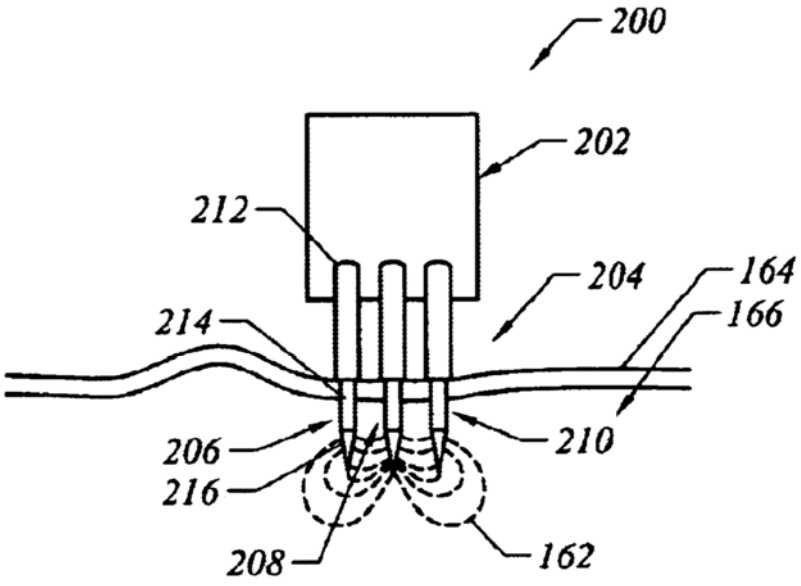

FIG. 6

Underwood, FIG. 6. Underwood thus describes heating the entire region that includes the three electrodes shown.

The same is true of Manstein, which was expressly distinguished during prosecution based on its failure to disclose or suggest the claimed effect:

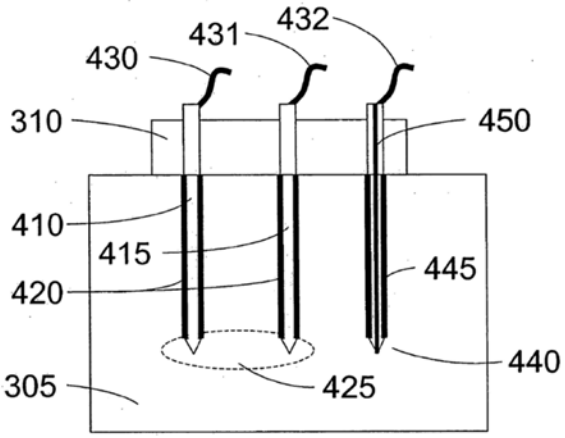

FIG. 4

Manstein described 425 as "an elongated region of thermal damage **425** around ***and between*** the tips of the two needles." Manstein (US 2005/0222565), [0041]; *see also* [0043].

In short, Respondents' own prior art demonstrates that coagulation / energy focused around each electrode (rather than between them) is not a "necessary" biproduct of the physics of the system, but rather just one possibility and that the prior art failed to achieve it. Thus, Respondents' own prior art demonstrates that its inherency arguments are wrong as a matter of law.

b. Exhibits A1, B1, and C1 ("DeAge")

In Exhibits A1, B1, and C1, Respondents argue that "[t]he DeÁge product manufactured by Dashin Enterprise, Korea ("DeÁge") qualifies as prior art under at least AIA 35 U.S.C. § 102(a)(1) because it is a product that was in public used, on sale, or otherwise available to the public before the effective filing date of the claimed invention…." *See* Respondents' July 10, 2023 Invalidity Contentions, Exs. A1, B1, and C1.[5] Respondents then contend that:

> The asserted claims of the '836, '379, and '444 Patents are invalid under AIA 35 U.S.C. § 102(a)(1) as anticipated by DeÁge, and/or are invalid under AIA 35 U.S.C. § 103 as obvious in view of DeÁge alone, or in combination with one or more other references identified herein and/or in Respondents' Invalidity Contentions, at least based on Respondents' understanding of Complainant's application of the asserted claims in an effort to show infringement.

Id.

---

[5] Respondents cite a number of documents related to this system in the respective charts. *See, e.g*, Ilooda-0006212 (#17_DeAge 09-1050 KFDA 2009.12.18._Translated_Certified); Ilooda-0006135 (DeAge 09-1050 KFDA 2009.12.18); Ilooda-0006260 (#20_DeAge - Busan Dermatology Clinic 2010.12.20_Translated_Certified); Ilooda-0006274 (DeAge - Busan Dermatology Clinic 2010.12.20); Ilooda-0006075 (#21_DeAge - Needle Structure_Translated_Certified_).; Ilooda-0006292 (DeAge - Needle Structure); Ilooda-0005831 (#22_DeAge - Receipt 2010.05.27_Certified); Ilooda-0006779 (DeAge - Receipt 2010.05.27); Ilooda-0006809 Ilooda-0006809 Ilooda-0006809 Ilooda-0006809 (#23_DeAge_flyer 3_Translated_Certified)...; Ilooda-0006808 (DeAge_flyer 3); Ilooda-0006257 Ilooda-0006257 (#24_DeAge - how to use p.11_Translated_Certified).; Ilooda-0006670 (DeAge flyer 1); Ilooda-0006759 (DeAge flyer 2); Ilooda-0006577 (DeAge flyer 4).

[redacted]

As an initial matter, Respondents are wrong that the DeAge system qualifies as prior art. As discussed above, the ’836, ’379, and ’444 Patents are entitled to a priority date before March 16, 2013, meaning pre-AIA framework applies when assessing whether a reference or system is prior art. Specifically, the ’836 patent claims priority to U.S. application no. 14/006,930, filed on June 14, 2012, and Korean application nos. 10-2011-0057691 and 10-2011-0057692, both filed on June 14, 2011. The Asserted Claims are entitled to an effective U.S. filing date of June 14, 2012, and an effective foreign filing date of June 14, 2011.

Under pre-AIA 35 U.S.C. 102, a prior art system has to be “known or used by others in this country … before the invention thereof by the applicant for patent” (pre-AIA 102(a)), or “… in public use or on sale in this country, more than one year prior to the date of the application for patent in the United States” (pre-AIA 102(b)). Respondents have expressly chosen to rely on the DeAge system itself, rather than published information about this system that might qualify as prior art on other bases, and thus must establish that the system itself meets the requirements to constitute prior art under U.S. law. However, Respondents have not shown that the DeAge system was “known or used by others in this country” prior to either the U.S. filing date of June 14, 2012, or the effective foreign filing date of June 14, 2011. Nor have Respondents shown that the DeAge system was “in public use or on sale in this country” prior to June 14, 2011 (one year prior to the June 14, 2012 date of the application for patent in the United States). Indeed, Respondents’ invalidity contentions do not even contend that the DeAge system qualifies as prior art under pre-AIA 35 U.S.C. 102, and instead rely entirely on Respondents’ erroneous contention that the ’836, ’379, and ’444 Patents should be evaluated under the post-AIA framework. For this reason alone, Respondents have failed to present a *prima facie* case of anticipation and/or obviousness in view of the DeAge system.

t:

[redacted]

[redacted]

[redacted]

[redacted].

[redacted]

6 [redacted]

[redacted]

[redacted]

[redacted]:

[redacted]

[redacted]

[redacted]

[redacted]

[redacted]

[redacted]

[redacted]

[redacted]

:

:

als

[redacted]

c. Exhibits A2, B2, and C2 ("Ganz")

In Exhibits A2, B2, and C2, Respondents argue that U.S. Patent Publication No. 2007/0208340A1 ("Ganz") qualifies as prior art under at least AIA 35 U.S.C. § 102(a)(1) because it is a patent that published before the filing of the earliest application to which the ['836, '379,

and ’444 Patents] could claim priority.” Respondents’ July 10, 2023 Invalidity Contentions, Exs. A2, B2, and C2. Respondents also assert that:

> To the extent that the [’836, ’379, and ’444 Patents] [are] subject to pre-AIA law, Ganz qualifies as prior art under at least 35 U.S.C. § 102(b) (pre-AIA) because it is a patent that published more than one year before the filing of the earliest application to which the [836, ’379, and ’444 Patents] could claim priority. Ganz also qualifies as prior art under at least 35 U.S.C. § 102(a) (pre-AIA) because it is a patent that was published prior to the alleged invention of the [’836, ’379, and ’444 Patents].

Id.

Respondents then contend that:

> The asserted claims of the [’836, ’379, and ’444 Patents] are invalid under 35 U.S.C. § 102 (AIA or pre-AIA) as anticipated by Ganz, and/or are invalid under 35 U.S.C. § 103 (AIA or pre-AIA) as obvious in view of Ganz alone, or in combination with one or more other references identified herein and/or in Respondents’ Invalidity Contentions, at least based on Respondents’ understanding of Complainant’s application of the asserted claims in an effort to show infringement

Id.

As discussed below, Ganz does not anticipate or render obvious (either alone or in combination) the Asserted Claims of the ’836, ’379, and ’444 Patents.

For example, Ganz does not disclose providing or applying an Alternating Current (AC) Radio Frequency (RF) signal to the plurality of electrodes. *See* ’836 Patent, claim 1 (“the RF generation module electrically coupled to the plurality of electrodes and configured to provide an Alternating Current (AC) RF signal to the plurality of electrodes”); ’836 Patent, claim 14 (“applying a Alternating Current (AC) Radio Frequency (RF) signal to the plurality of electrodes”); ’379 Patent, claim 1, and ’444 Patent, claim 1 (“the RF generation module electrically coupled to the plurality of electrodes and configured to provide an RF signal with oscillating current to the plurality of electrodes”); ’379 Patent, claim 10, and ’444 Patent, claim 10 (“applying an RF signal with oscillating current to the plurality of electrodes”).

Serendia notes that, as of the date of this response, the parties disagree over the appropriate construct of the terms "[a/an] Alternating Current (AC) [RF/Radio Frequency (RF)] signal" and "an RF signal with oscillating current." Under Serendia's (and Staff's) proposed construction, these terms carry their plain and ordinary meaning, which is "an electrical signal with oscillating current (current alternating polarities), and having a radio frequency (measured in MHz)." Under Respondents' proposed construction, "a signal combining an AC frequency rate and an RF frequency rate." Notably, Respondents fail to identify how Ganz discloses providing or applying an Alternating (or oscillating) Current (AC) Radio Frequency (RF) signal to the plurality of electrodes, under either construction. Indeed, Respondents' invalidity contentions do not cite ***any*** evidence that Ganz discloses an Alternating (or oscillating) Current Radio Frequency signal, instead citing to a series of paragraphs merely referencing an "energy source." *See, e.g.*, Respondents' July 10, 2023 Invalidity Contentions, Ex. A2 at 7-8; 36-37. Respondents then assert that:

> … it was well-known in the art that a radio frequency signal is generated from alternating current (AC). *Radiofrequency Catheter Ablation for Cardiac Tachyarrhythmias*, Manolis, A.S., et al., Ann Intern Med. (1994) 121:452-461 at 452 ("Radiofrequency energy is a form of electrical energy, generated from low-power (15 to 60 V), high-frequency (30 KHz to 300 MHz) alternating current.").

See, e.g., id. at 42.

As an initial matter, the above contention appears to go against Respondents' proposed construction for these terms (requiring a signal "combining an AC frequency rate and an RF frequency rate"). Regardless, Respondents are wrong that the disclosure of RF energy is coextensive with the disclosure of alternating current. For example, as discussed in U.S. 6,766,202 ("Underwood") – a *reference Respondents cite as prior art* – RF energy may also be applied as non-AC "voltage pulses" made at a rate within the radio frequency range, rather than via alternating current. *See* Underwood at 6:42-52 ("the voltage is usually delivered in a series of ***voltage pulses or***

alternating current of time varying voltage amplitude with a sufficiently high frequency (e.g., on the order of 5 kHz to 20 MHz)").[7]

Moreover, while Ganz discloses the use of RF energy, Ganz fails to disclose the use of alternating (or oscillating) current RF energy with ***bipolar*** electrodes, in conjunction with the other claim limitations. *See* '836 Patent, claims 1, 14; '379 Patent, claims 1, 10 (requiring "a plurality of electrodes, the electrodes being bipolar"); '444 Patent, claim 4 ("wherein the electrodes are bipolar"). For example, while Ganz discloses "monopolar electrodes," "bipolar electrodes," and "RF electrodes," Ganz does not disclose any embodiment which uses bipolar electrodes for application of the RF energy. For instance, when discussing embodiments specifying both the RF nature of the electrode and the polarity of the electrode, Ganz only discloses ***monopolar*** electrode configurations. *See, e.g.*, Ganz at [0013] (discussing "***monopolar*** RF electrodes"); *see also id.* at [0053] ("In particular embodiments, the electrodes are provided as a contiguous sequence of arrays with a single common RF electrode along an entire length of the arrays."). Nor does Ganz identify the results of using bipolar electrodes, either in terms of energy applied or coagulation achieved.[8]

---

[7] Indeed, Respondents Lutronic, SHEnB, Rohrer, Ilooda, Cutera, Jeisys, Cynosure, and EndyMed all assert that their "RF" microneedle accused products do not satisfy the alternating (or oscillating current) radio frequency limitations of the Asserted Claims, directly contradicting the assertions in Respondents' invalidity contentions. *See, e.g.*, June 14, 2023 Interrogatory Responses.

[8] The parties agree that the terms "electrodes being bipolar" / "electrodes are bipolar" carry their plain and ordinary meaning, which is electrodes change or alternate between being positive or negative as the current alternates between them (as opposed to a monopolar configuration where current flows from one or more electrodes that deliver current to one or more ground electrodes). *See* July 21, 2023 Post-Markman JCCC. But Respondents fail to explain how Ganz discloses bipolar electrodes under this agreed construction, and as discussed above, Ganz does not disclose the use of bipolar electrodes for the application of RF energy as required by the claims. Serendia also notes that, as of the time of these validity contention responses, the parties disagree regarding the construction of "a plurality of electrodes, the electrodes being bipolar" and "a plurality of electrodes … the electrodes are bipolar." Serendia understands that Staff and Respondents contend that there is disclaimer regarding certain electrode configurations in the prosecution history of the patents. While Serendia disagrees with these disclaimer arguments, to the extent these arguments succeed, these purportedly disclaimed configurations would not invalidate the claims.

[redacted]

As another example, Ganz does not disclose a system or method "configured to cause coagulation around each electrode rather than coagulating between the electrodes" ('836 Patent, claims 1, 14), "apply[ing] energy to body segments around each electrode rather than to body segments between the electrodes" ('379 Patent, claims 1, 10); or "caus[ing] energy to be substantially applied to body segments around each electrode" ('444 Patent, claims, 1, 10). While Respondents cite to disclosure in Ganz discussing coagulation (*see, e.g.,* Respondents' July 10, 2023 Invalidity Contentions, Ex. A2 (citing Ganz at [0006], [0010], [0028], [0048], [0056], [0058])), Ganz includes no disclosure regarding only causing energy application / coagulation around each electrode.[9] Indeed, Ganz discloses that the regions around the needles are removed to create perforations, rather than creating coagulation around the needles: "The device also imparts perforations into the skin, ***rather than*** merely imparting coagulations into the skin." Ganz, at [0032] (emphasis added).

Ganz explains that the focus of its invention is ***not*** coagulation, but instead the generation of perforations in the skin to prompt a more aggressive wound healing response:

> One drawback with the FRAXEL laser is that the laser does not create perforations or vertical holes in the tissue, ***but only causes zones of coagulation***. Applicant has discovered that it is desirable to create vertical perforations or ablation holes in tissue, as this prompts an even more aggressive wound healing response than is currently seen. When perforations are created, tissue layers surrounding the perforations are left untreated and contribute to tissue regeneration. Thus, the treated tissue can heal and regenerate from all edges of the perforation wound, not just from the tissue areas underneath the wound. Perforations allow for a faster regeneration and healing time.

Ganz, at [0006]; *see also id.* at [0044] ("The electrodes are arranged in a pattern to create the desired pattern of perforation in tissue."). Ganz even discusses the application of energy to the electrodes for the specific purpose of perforating the tissue. *See id*. at [0051].

[9] While Respondents cite to figures in Ganz purporting to identify zones of coagulation, these figures are ambiguous.

[redacted]

Ganz explains that a "perforation" is not coagulation but rather "vertical areas of thermal damage or ablation to the tissue causing tissue necrosis." *See id*. at [0027]. As Ganz explains:

> The width of the perforation created will be at least the width of the electrode, and in many cases larger. The width of the perforation created depends not only on the width of the electrode, but also the level of energy discharged form the electrode. When more energy is discharged from the electrode, a larger perforation width and depth is created.

Id. at [0053]. Ganz does not disclose the width of the electrodes, and there is no scale on Figures 9-10. Also, Figures 9-10 show perforations that appear substantially wider than the electrode that would have been inserted. In other words, Ganz does not disclose that the tissue that was "around each electrode" exists after Ganz's electrodes are used, let alone that coagulation exists there or that energy is concentrated in that region. Ganz instead discloses removing the tissue around the electrodes and creating zones of coagulation around those holes, "***rather than merely imparting coagulations into the skin***," which Ganz criticizes as inferior. *Id*. at [0032] (emphasis added).

Thus Respondents' invalidity contentions fail to provide evidence that Ganz discloses these limitations.

As another example, Ganz does not disclose a "predetermined time interval" or that "the predetermined time interval is from 0.05 to 0.8 seconds," as required by claims 2, 4, 16, 17, and 22 of the '836 Patent. Specifically, for these limitations, Respondents cite only to portions of Ganz discussing varying the energy and power of the system. Respondents' July 10, 2023 Invalidity Contentions, Ex. A2 (citing Ganz at [0048], [0059])). But Ganz is silent as to any predetermined time interval, let alone a predetermined time interval from "0.05 to 0.8 seconds." Thus Respondents' invalidity contentions fail to provide evidence that Ganz discloses "the predetermined time interval is from 0.05 to 0.8 seconds."

As another example, Ganz does not disclose "the closest neighboring electrodes have opposite polarities" ('836 Patent, claim 5; '379 Patent, claim 5), "the nearest electrodes having

opposite polarities" ('444 Patent, claims 1, 10), "[t]he mammalian body treatment apparatus of claim 1, wherein the plurality of electrodes is arranged into a plurality of rows and columns and neighboring electrodes in each of the plurality of rows columns have opposite polarities" ('444 Patent, claim 5), "the plurality of electrodes forms a square configuration," ('444 Patent, claim 6), or "[t]he mammalian body treatment apparatus of claim 1, wherein the plurality of electrodes forms a rectangular configuration and their respective polarities form a checkboard pattern" ('444 Patent, claim 7). Indeed, none of the citations Respondents' provide for these limitations provide any indication regarding the requisite electrode configurations at all. *See, e.g.*, Respondents' July 10, 2023 Invalidity Contentions, Ex. A2 at 19-20 (citing Ganz at [0014], [0047], [0056]). Thus Respondents' invalidity contentions fail to provide evidence that Ganz discloses neighboring electrodes with opposite polarities.

As another example, Ganz does not disclose "[t]he skin treatment apparatus of claim 1, wherein the plurality of electrodes are non-insulated" ('836 Patent, claim 12), "[t]he mammalian body treatment apparatus of claim 1, wherein the plurality of electrodes are non-insulated" ('379 Patent, claim 8), "[t]he mammalian body treatment apparatus of claim 1, wherein the plurality of electrodes are non-insulated" ('444 Patent, claim 8), "[t]he skin treatment apparatus of claim 1, wherein each electrode of the plurality of electrodes is insulated except at its tip" ('836 Patent, claim 13), or "[t]he mammalian body treatment apparatus of claim 1, wherein each electrode of the plurality of electrodes is insulated except at its tip" ('379 Patent, claim 9; '444 Patent, claim 9). Specifically, for these limitations, Respondents cite to disclosure from Ganz that "[t]he base of the treatment pad or treating surface and ***various portions of the proximal electrodes can also be insulated*** in order to limit the coagulation injury to the distal end of the electrode as well." Respondents' July 10, 2023 Invalidity Contentions, Ex. A2 at 27 (citing Ganz at [0056]) (emphasis

added). But Ganz is silent regarding the use of ***non***-insulated needles, and does not disclose what specific portions of the electrodes are insulated (and thus does not disclose electrodes which are "insulated except at its tip").

As another example, Ganz does not disclose "[t]he skin treatment apparatus of claim 1, wherein the electrodes are needles and have a diameter from 0.25 mm to 0.30 mm," as required by claim 9 of the '836 Patent. Indeed, Respondents do not cite any disclosure from Ganz relating to any diameter of needles between 0.25 mm to 0.30 mm. Instead, Respondents broadly cite to a disclosure that electrodes will "have a depth and width for providing perforations being no more than about 2 mm in depth and about 0.5 mm in width." Respondents' July 10, 2023 Invalidity Contentions, Ex. A2 at 22-23 (citing Ganz at [0010], [0053], [0065]). But a disclosure of "about 0.5 mm in width" for perforations would not inform a POSITA that the associated needles must be between 0.25 mm to 0.30 mm. Thus Respondents' invalidity contentions fail to provide evidence that Ganz discloses needles with a diameter from 0.25 mm to 0.30 mm.

As another example, the Ganz does not disclose "the closest neighboring electrodes are separated by a distance of 1.3 mm to 3.0 mm," as required by claim 11 of the '836 Patent and claim 7 of the '379 Patent. Specifically, for these limitations, Respondents cite to general disclosure from Ganz that "[t]he electrodes can also be spaced apart at a desired length so that the perforations in tissue will also be spaced apart at that length," and that "[i]n certain embodiments, electrodes are provided on a treating surface have a spacing of less than about 5 mm, and preferably less than about 2 mm," and "spacing between electrodes can be varied along the treating surface." Respondents' July 10, 2023 Invalidity Contentions, Ex. A2 at 24-25 (citing Ganz at [0010], [0049], [0052], and claim 6). But the cited portions of Ganz fails to provide any disclosure that "the closest neighboring electrodes are separated by a distance of 1.3 mm to 3.0 mm." Moreover, Respondents fail

to provide any cogent reason why Ganz's disclosure of electrodes spacing of "less than about 5 mm, and preferably less than about 2 mm" would inform a POSITA that electrode spacing should be between 1.3 mm to 3.0 mm, as required by the claims. Thus Respondents' invalidity contentions fail to provide evidence that Ganz discloses neighboring electrodes which are separated by a distance of 1.3 mm to 3.0 mm.

As another example, Ganz does not disclose "[t]he method of treating skin of claim 14, wherein the RF is about 2.0 MHz and the coagulated area around each electrode is oval shaped," as required by claim 19 of the '836 Patent, or "[t]he method of treating a mammalian body of claim 10, wherein the RF is about 2.0 MHz and the section of the body segment around each electrodes where energy is applied is oval shaped," as required by claim 15 of the '379 Patent. Indeed, Respondents fail to identify ***any*** disclosure in Ganz regarding the specific frequency of the applied RF signal. *See, e.g.,* Respondents' July 10, 2023 Invalidity Contentions, Exs. A2, B2, C2 at *passim*. Nor do Respondents cite to any disclosure from Ganz that the shape of energy applied is "oval." *See id*. Thus Respondents' invalidity contentions fail to provide evidence that Ganz discloses RF about 2.0 MHz, wherein the energy / coagulation around each electrode is oval shaped.

As another example, Ganz does not disclose "[t]he method of treating skin of claim 14, wherein the RF is from 0.5 to 10 Mhz and the predetermined time interval is from 0.05 to 0.8 seconds," as required by claim 22 of the '836 Patent. Once again, Respondents fail to identify ***any*** disclosure in Ganz regarding the specific frequency of the applied RF signal. *See, e.g.,* Respondents' July 10, 2023 Invalidity Contentions, Exs. A2, B2, C2 at *passim*. Moreover, as discussed above, claim 14 requires "applying a Alternating Current (AC) Radio Frequency (RF) signal to the plurality of electrodes" which are "configured to cause coagulation around each electrode rather than coagulating between the electrodes," limitations which Ganz fails to disclose. And once

again, Respondents have failed to identify any disclosure Ganz showing a predetermined time interval from 0.05 to 0.8 seconds.

Respondents attempt to gap-fill these glaring deficiencies in Ganz through a broad brush statement for each limitation that "[t]o the extent this limitation is not explicitly or inherently disclosed by this reference, or rendered obvious by the references disclosed herein, it would have further been obvious given the knowledge of a person of ordinary skill in the art and/or other references disclosed and/or charted in Respondents' Invalidity Contentions." Respondents' July 10, 2023 Invalidity Contentions, Exs. A2, B2, and C2 at *passim*. But Respondents' catch-all qualifications are inadequate to establish that any of the Asserted Claims are invalid. First, it is improper to rely on a person of skill's knowledge "as a wholesale substitute for reasoned analysis and evidentiary support, especially when dealing with a limitation missing from the prior art references specified." *Arendi S.A.R.L.*, 832 F.3d at 1362. Ganz's deficiencies go to critical elements of the Asserted Claims that cannot be papered over with conclusory allegations about a POSITA's background knowledge. Second, as explained in the sections discussing Respondents' other invalidity charts, the other references Respondents try to combine with Ganz each themselves lack various limitations of the Asserted Claims. And Respondents have not cited a single reference that discloses providing or applying an Alternating Current (AC) Radio Frequency (RF) signal to the plurality of bipolar electrodes configured to cause coagulation around each electrode rather than coagulating between the electrode.

Thus, Respondents have not established a *prima facie* case of anticipation or obviousness.

d. Exhibits A3, B3, and C3 ("Hantash 718 PCT")

In Exhibits A3, B3, and C3, Respondents argue that "PCT Patent Application Publication No. WO 2007/064718 ('Hantash '718 PCT') qualifies as prior art under at least AIA 35 U.S.C. § 102(a)(1) because it is a patent that published before the filing of the earliest application to which

U.S. Patent No. 9,480,836 ("the '836 patent") could claim priority." Respondents' July 10, 2023 Invalidity Contentions, Exs. A3, B3, and C3. Respondents also assert that "[t]o the extent that the ['836, '379, and '444 Patents] [are] subject to pre-AIA law, Hantash '718 PCT qualifies as prior art under at least 35 U.S.C. § 102(b) (pre-AIA) because it was published more than one year before the filing of the earliest application to which the ['836, '379, and '444 Patents] could claim priority."

Respondents then contend that:

> The asserted claims of the ['836, '379, and '444 Patents] are invalid under 35 U.S.C. § 102 as anticipated by Hantash '718 PCT, and/or are invalid under 35 U.S.C. § 103 as obvious in view of Hantash '718 PCT alone, or in combination with one or more other references identified herein and/or in Respondents' Invalidity Contentions, at least based on Respondents' understanding of Complainant's application of the asserted claims in an effort to show infringement.

Id.

As an initial matter, Respondents' invalidity charts for the Hantash 718 reference are wholly deficient, as they cite to ***pages*** of disclosure for each limitation of the Asserted Claims, without explaining how any of the cited disclosure relates to the relevant claim limitation. And in fact, much of what Respondents cite for each limitation appears to have no relevance to the limitations at issue. Respondents' Hantash 718 invalidity charts thus fail to provide notice regarding what portions of this reference Respondents intend to rely upon to assert the respective claims are invalid, and fail to demonstrate that Hantash 718 anticipates or renders obvious any Asserted Claim.

Regardless, as discussed below, Hantash 718 does not anticipate or render obvious (either alone or in combination) the Asserted Claims of the '836, '379, and '444 Patents.

For example, Hantash 718 does not disclose bipolar electrodes, as required by the Asserted Claims. *See* '836 Patent, claims 1, 14; '379 Patent, claims 1, 10 (requiring "a plurality of

[redacted]

electrodes, the electrodes being bipolar"); '444 Patent, claim 4 ("wherein the electrodes are bipolar"). Specifically, for these limitations, Respondents' initial May 24, 2023 Invalidity Contentions cited to ***twelve pages*** of disclosure from Hantash 718 for this limitation, without indicating what portion of this disclosure relates to the requisite "bipolar electrodes" of the asserted claims. *See, e.g.,* Respondents' May 24, 2023 Invalidity Contentions, Ex. A3 at 5-16. And while Respondents' July 10, 2023 Final Invalidity Contentions now cite to disclosure where "[o]ne array includes all of the negative polarity needles 116 (return electrodes) and the other includes all of the positive polarity needles 117 (active electrodes)" (*see* Respondents' July 10, 2023 Final Invalidity Contentions, Ex. A3 at 5), Respondents have not established that Hantash 718 discloses the "bipolar electrodes" required by the Asserted Claims. For example, the parties agree that the terms "electrodes being bipolar" / "electrodes are bipolar" carry their plain and ordinary meaning, which is electrodes change or alternate between being positive or negative as the current alternates between them (as opposed to a monopolar configuration where current flows from one or more electrodes that deliver current to one or more ground electrodes). *See* July 21, 2023 Post-Markman JCCC. Respondents have not identified disclosure from Hantash 718 of electrodes which satisfy this requirement.[10] Thus Respondents' invalidity contentions fail to provide any evidence that Hantash 718 discloses bipolar electrodes.

As another example, Hantash 718 does not disclose providing or applying an Alternating Current (AC) Radio Frequency (RF) signal to the plurality of electrodes. *See* '836 Patent, claim 1 ("the RF generation module electrically coupled to the plurality of electrodes and configured to

[10] Serendia also understands that Staff and Respondents contend that there is disclaimer regarding certain electrode configurations in the prosecution history of the patents. While Serendia disagrees with these disclaimer arguments, to the extent these arguments succeed, these purportedly disclaimed configurations would not invalidate the claims.

provide an Alternating Current (AC) RF signal to the plurality of electrodes"); '836 Patent, claim 14 ("applying a Alternating Current (AC) Radio Frequency (RF) signal to the plurality of electrodes"); '379 Patent, claim 1, and '444 Patent, claim 1 ("the RF generation module electrically coupled to the plurality of electrodes and configured to provide an RF signal with oscillating current to the plurality of electrodes"); '379 Patent, claim 10, and '444 Patent, claim 10 ("applying an RF signal with oscillating current to the plurality of electrodes").

Serendia notes that, as of the date of this response, the parties disagree over the appropriate construct of the terms "[a/an] Alternating Current (AC) [RF/Radio Frequency (RF)] signal" and "an RF signal with oscillating current." Under Serendia's (and Staff's) proposed construction, these terms carry their plain and ordinary meaning, which is "an electrical signal with oscillating current (current alternating polarities), and having a radio frequency (measured in MHz)." Under Respondents' proposed construction, "a signal combining an AC frequency rate and an RF frequency rate." Notably, Respondents fail to identify how Hantash 718 discloses providing or applying an Alternating (or oscillating) Current (AC) Radio Frequency (RF) signal to the plurality of electrodes, under either construction.

Specifically, in Respondents' initial May 24, 2023 contentions for these limitations, Respondents cite to ***ten pages*** of disclosure from Hantash 718 for this limitation, without indicating what portion of this disclosure relates to the requisite alternating (or oscillating) current limitations of the Asserted Claims. *See, e.g.* Respondents' May 24, 2023 Invalidity Contentions, Ex. A3 at 29-38. Respondents' July 10, 2023 contentions deleted these ten pages however, replacing them instead with mere pincites. *See,* Respondents' July 10, 2023 Invalidity Contentions, Ex. A3 at 6-7. Regardless, Respondents identify no disclosure of alternating (or oscillating) current in any of these citations. *See id*. Instead, Respondents merely assert that

[redacted]

> Further, it was well-known in the art that a radio frequency signal is generated from alternating current (AC). *Radiofrequency Catheter Ablation for Cardiac Tachyarrhythmias*, Manolis, A.S., et al., Ann Intern Med. (1994) 121:452-461 at 452 ("Radiofrequency energy is a form of electrical energy, generated from low-power (15 to 60 V), high-frequency (30 KHz to 300 MHz) alternating current."). Therefore, a person of ordinary skill in the art would have understood that the RF signal provided by Hantash's radio frequency energy source was an alternating current.

See, e.g., id. at 7. But as discussed previously, Respondents are wrong that the disclosure of RF energy is coextensive with the disclosure of alternating current. For example, as discussed in U.S. 6,766,202 ("Underwood") – a *reference Respondents cite as prior art* – RF energy may also be applied as non-AC "voltage pulses" made at a rate within the radio frequency range, rather than via alternating current. *See* Underwood at 6:42-52 ("the voltage is usually delivered in a series of ***voltage pulses or alternating current*** of time varying voltage amplitude with a sufficiently high frequency (e.g., on the order of 5 kHz to 20 MHz)").[11] Thus Respondents' invalidity contentions fail to provide evidence that Hantash 718 discloses providing or applying an Alternating Current (AC) Radio Frequency (RF) signal to the plurality of electrodes.

As another example, Hantash 718 does not disclose a system or method "configured to cause coagulation around each electrode rather than coagulating between the electrodes" ('836 Patent, claims 1, 14), "apply[ing] energy to body segments around each electrode rather than to body segments between the electrodes" ('379 Patent, claims 1, 10); or "caus[ing] energy to be substantially applied to body segments around each electrode" ('444 Patent, claims, 1, 10). Specifically, for these limitations, in Respondents' May 24, 2023 invalidity contentions, Respondents cite to ***fourteen pages*** of disclosure from Hantash 718 for this limitation, without indicating what

[11] Indeed, Respondents Lutronic, SHEnB, Rohrer, Ilooda, Cutera, Jeisys, Cynosure, and EndyMed all assert that their "RF" microneedle accused products do not satisfy the alternating (or oscillating current) radio frequency limitations of the Asserted Claims, directly contradicting the assertions in Respondents' invalidity contentions. *See, e.g*., June 14, 2023 Interrogatory Responses.

portion of this disclosure relates to the requisite limitations. *See, e.g.* Respondents' May 24, 2023 Invalidity Contentions, Ex. A3 at 38-51. And while Respondents' replaced these fourteen pages with mere pincites in their July 10, 2023 Final Invalidity Contentions, Respondents still fail to indicate what portion of the cited disclosure relates to the requisite limitations. *See* Respondents' July 10, 2023 Invalidity Contentions, Ex. A3 at 7-13. Instead, Respondents now argue that the limitations requiring coagulation / energy to be applied around each electrode without extending between each electrode are inherently disclosed. *See id*. at 9-13. But as discussed above, *supra* at Section A.2.a, Respondents' inherency arguments fail as a matter of law.

Moreover, Hantash 718 actually teaches away from applying energy / coagulation around the needles rather than between them, as Figures 4 through 9 show treatment patterns which extend between the treatment electrodes:

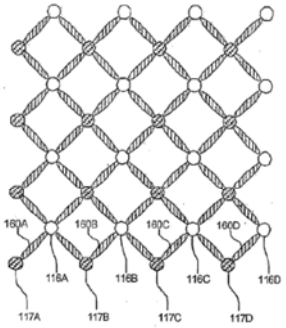

Figure 4A

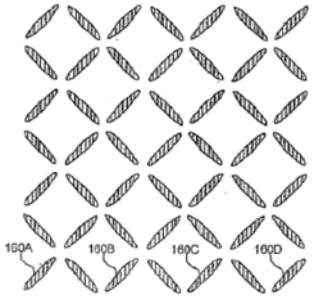

Figure 4B

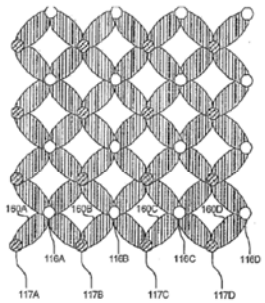

Figure 5A

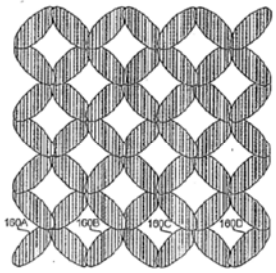

Figure 5B

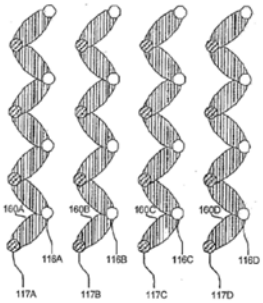

Figure 6A

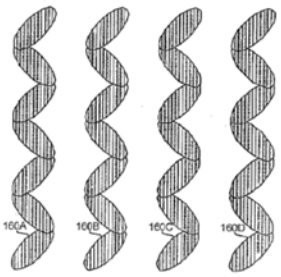

Figure 6B

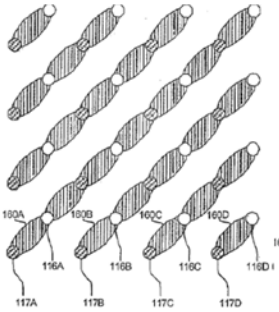

Figure 7A

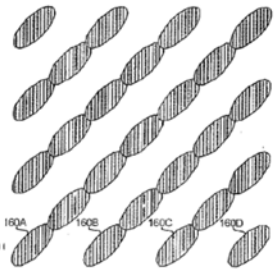

Figure 7B

[redacted]

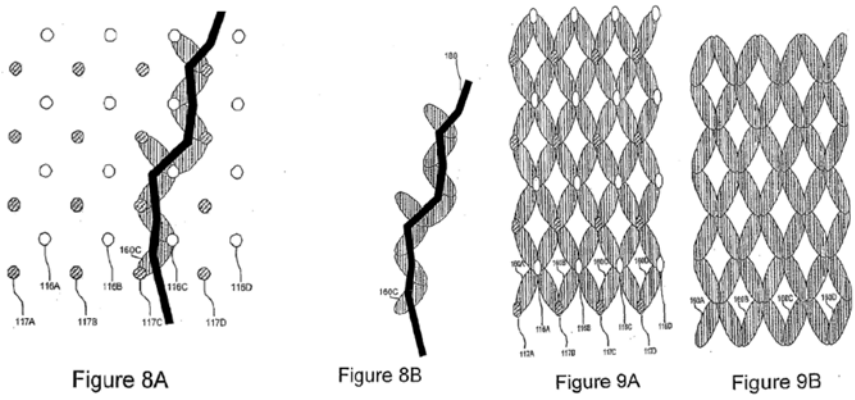

Faced with the disclosure in Hantash ’718 PCT teaching away from these limitations, Respondents argue that these examples are just one example of how Hantash ’718 PCT may affect tissue, and that Hantash ’718 PCT still discloses these limitations because Hantash ’718 PCT discloses that it is “desirable” to form non-connected coagulation zones. *Id*. at 9-13 (citing Hantash ’718 PCT at [0012], [0021], [0040], [0052]). Respondents then point to disclosure in Hantash ’718 PCT that “[a]t high RF pulse energies and/or close spacing of the array of needles 115, the treatment zones 160 can be created such that the treatment zones 160 merge together to form a continuous treatment pattern 162 as shown in FIGS. 5 A and 5B.” *Id*. at 11 (citing Hantash ’718 PCT, at [0053], [0059]). Respondents then conclude that “[c]onversely, this means it was known that coagulation is found closer to a given electrode as the RF energy increase and/or as the spacing between needles decreases.” *Id.* at 13.

But Respondents provide no cogent reason why disclosure of merged / continuous treatment patterns ***between*** electrodes would inform a POSITA to apply coagulation / energy in discrete locations ***around*** each electrodes (instead of between them). Indeed, as discussed above, *supra* at Section A.2.a, both the Examiner and PTAB reviewed prior art which disclosed continuous application of energy / coagulation between electrodes and both the Examiner and PTAB found such prior art did not disclose the subject limitations (literally or inherently). *See, e.g.,* ’444 Patent Notice of Allowance (“In the Mehta reference (Pub. No.: US 2010/0204695 A1) ***the energy***

seemed to flow between bipolar needles (e.g. see figure 13), not around individual needles.”); IPR2022-00594 (’836 Patent IPR Institution Decision) at 25 (finding “***Petitioner has not reasonably shown that Mehta discloses or suggests a ‘plurality of electrodes configured to cause coagulation around each electrode rather than coagulating between the electrodes***.’”); IPR2022-00593 (’379 patent IPR Institution Decision) at 24 (“Because Mehta discloses and depicts fractional lesions (that is, coagulation) extending from one electrode to another electrode in a bipolar pair-or ***continuously between the electrodes***-Petitioner has not shown a reasonable likelihood that Mehta discloses or suggests a ‘apply energy to body segments around each electrode rather than to body segments between the electrodes.’”).

As another example, the Hantash 718 does not disclose “the closest neighboring electrodes are separated by a distance of 1.3 mm to 3.0 mm,” as required by claim 11 of the ‘836 Patent and claim 7 of the ’379 Patent. Specifically, for these limitations, Respondents cite to disclosure from Hantash 718 regarding examples with a “needle separation of 0.5 mm” and where “the separation between the needles was 1 mm.” Respondents’ July 10, 2023 Invalidity Contentions, Ex. A3 at 23-24. But each of these cited examples fall outside the claimed range.

Respondents also cite to disclosure in Hantash ’718 that “[a]t high RF pulse energies and/or close spacing of the array of needles 115, the treatment zones 160 can be created such that the treatment zones 160 merge together to form a continuous treatment pattern 162 as shown in FIGS. 5 A and 5B.” *Id*. at 23-24 (citing Hantash ’718, at [0053], [0059]). Respondents then argue that “[c]onversely, this means it was known that coagulation is found closer to a given electrode as the RF energy increase and/or as the spacing between needles decreases.” *Id*. at 24. But like Respondents’ arguments with respect to the coagulation / energy limitations, Respondents provide no cogent reason why disclosure of electrode distances causing merged / continuous treatment

[redacted]

patterns ***between*** electrodes would inform a POSITA how to properly distance electrodes to cause discrete treatment ***around*** each electrodes (instead of between them). Moreover, Hantash 718 does not indicate that the width of the treatment zone is co-extensive with the width of the needles. Thus Respondents' invalidity contentions fail to provide evidence that Hantash 718 discloses these limitations.

As another example, Hantash 718 does not disclose "[t]he method of treating skin of claim 14, wherein the RF is from 0.5 to 10 Mhz and the predetermined time interval is from 0.05 to 0.8 seconds," as required by claim 22 of the '836 Patent. As discussed above, claim 14 requires "applying a Alternating Current (AC) Radio Frequency (RF) signal to the plurality of electrodes" which are "configured to cause coagulation around each electrode rather than coagulating between the electrodes," limitations which Hantash 718 fails to disclose.

Respondents attempt to gap-fill these glaring deficiencies in Hantash 718 through a broad brush statement for each limitation that "[t]o the extent this limitation is not explicitly or inherently disclosed by this reference, or rendered obvious by the references disclosed herein, it would have further been obvious given the knowledge of a person of ordinary skill in the art and/or other references disclosed and/or charted in Respondents' Invalidity Contentions." Respondents' July 10, 2023 Invalidity Contentions, Exs. A3, B3, and C3_ at *passim*. But Respondents' catch-all qualifications are inadequate to establish that any of the Asserted Claims are invalid. First, it is improper to rely on a person of skill's knowledge "as a wholesale substitute for reasoned analysis and evidentiary support, especially when dealing with a limitation missing from the prior art references specified." *Arendi S.A.R.L.*, 832 F.3d at 1362. Hantash 718's deficiencies go to critical elements of the Asserted Claims that cannot be papered over with conclusory allegations about a POSITA's background knowledge. Second, as explained in the sections discussing Respondents'

other invalidity charts, the other references Respondents try to combine with Hantash 718 each themselves lack various limitations of the Asserted Claims. And Respondents have not cited a single reference that discloses providing or applying an Alternating Current (AC) Radio Frequency (RF) signal to the plurality of electrodes configured to cause coagulation around each electrode rather than coagulating between the electrodes.

Thus, Respondents have not established a *prima facie* case of anticipation or obviousness.

e. Exhibits A4, B4, and C4 ("Hantash – Lasers in Surgery")

In Exhibits A4, B4, and C4, Respondents argue that:

> Hantash, B., *et a*l., "Pilot Clinical Study of a Novel Minimally Invasive Bipolar Microneedle Radiofrequency Device," *Lasers in Surgery and Medicine*, 41:87-95 (2009) ("Hantash - Lasers in Surgery") qualifies as prior art under at least 35 U.S.C. § 102(b) (pre-AIA) because it was published more than one year before the filing of the earliest application to which [the '836, '379, and '444 Patents] could claim priority.

Respondents' July 10, 2023 Invalidity Contentions, Exs. A4, B4, and C4. Respondents then contend that:

> The asserted claims of the ['836, '379, and '444 Patents] are invalid under 35 U.S.C. § 102 as anticipated by Hantash - Lasers in Surgery, and/or are invalid under 35 U.S.C. § 103 as obvious in view of Hantash - Lasers in Surgery alone, or in combination with one or more other references identified herein and/or in Respondents' Invalidity Contentions, at least based on Respondents' understanding of Complainant's application of the asserted claims in an effort to show infringement.

Id.

However, Respondents failed to identify "Hantash – Lasers in Surgery," as a prior art reference in either their initial May 24, 2023 Notice of Prior Art, or their "Amended" June 2, 2023 Notice of Prior Art. Instead, Respondents only identify "Hantash – Lasers in Surgery" as a supporting reference for the Miratone system it contends is prior art. Respondents have thus waived any contentions that "Hantash – Lasers in Surgery" by itself anticipates or renders obvious any of the Asserted Claims. With respect to any purported disclosure from "Hantash – Lasers in Surgery"

upon which Respondents rely for the Miratone system, Serendia addresses those arguments in its section addressing the Miratone system.

f. Exhibits A5, B5, and C5 ("Kreindel")

In Exhibits A5, B5, and C5, Respondents assert that:

> The asserted claims of the '836 Patent are invalid under 35 U.S.C. § 103 as obvious in view of Kreindel '231 in combination with one or more other references identified herein and/or in Respondents' Invalidity Contentions, at least based on Respondents' understanding of Complainant's application of the asserted claims in an effort to show infringement.

Respondents' May 24, 2023 Invalidity Contentions, Exs. A4, B5, and C5.[12]

However, while Respondents identified Kreindel in their May 24, 2023 Notice of Prior Art, on June 2, 2023 Respondents served an "Amended" Notice of Prior Art, which removed Kreindel as a prior art reference. Thus, Respondents have waived pursuing any prior art invalidity ground based whole or in part on Kreindel. To the extent Respondents are later permitted do so, Serendia reserves the right to respond.

g. Exhibits A6, B6, and C6 ("Lee 500")

In Exhibits A6, B6, and C6, Respondents argue that "KR 10-0852500 ('Lee '500') qualifies as prior art under at least AIA 35 U.S.C. § 102(a)(1) because it is a patent that published before the filing of the earliest application to which [the '836, '379, and '444 Patents] could claim priority." *See* Respondents' July 10, 2023 Invalidity Contentions, Exs. A6, B6, and C6. Respondents further assert that:

> To the extent that the ['836, '379, and '444 Patents] [are] subject to pre-AIA law, Lee '500 qualifies as prior art under at least 35 U.S.C. § 102(b) (pre-AIA) because it is a patent that published more than one year before the filing of the earliest application to which the ['836, '379, and '444 Patents] could claim priority. Lee '500 also qualifies as prior art under at least 35 U.S.C. § 102(a) (pre-AIA) because it is

[12] Respondents' July 10, 2023 Final Invalidity Contentions did not include invalidity charts for the Kreindel reference.

[redacted]

> a patent that was published prior to the alleged invention of the ['836, '379, and '444 Patents].

Id.

Respondents then contend that:

> The asserted claims of the ['836, '379, and '444 Patents] are invalid under 35 U.S.C. § 102 (AIA or pre-AIA) as anticipated by Lee '500, and/or are invalid under 35 U.S.C. § 103 (AIA or pre-AIA) as obvious in view of Lee '500 alone, or in combination with one or more other references identified herein and/or in Respondents' Invalidity Contentions, at least based on Respondents' understanding of Complainant's application of the asserted claims in an effort to show infringement.

Id.

As discussed below, Lee 500 does not anticipate or render obvious (either alone or in combination) the Asserted Claims of the '836, '379, and '444 Patents.

For example, the Lee 500 does not disclose bipolar electrodes, as required by the Asserted Claims. *See* '836 Patent, claims 1, 14; '379 Patent, claims 1, 10 (requiring "a plurality of electrodes, the electrodes being bipolar"); '444 Patent, claim 4 ("wherein the electrodes are bipolar"). Indeed, Respondents identify no portion of Lee 500 which discusses bipolar electrodes at all. *See e.g*., Respondents' July 10, 2023 Invalidity Contentions, Exs. A6, B6, C6, at *passim*. And while Respondents' contentions cite to Lee 500's disclosure of an embodiment where "needles adjacent to each other form a pair, each pair of needles 21 receiving 'positive (+),' and 'negative (-)' current" (*see e.g., id*., Ex. A6 at 3 (citing Lee 500 at <30>)), Respondents do not explain how this discloses the "bipolar electrodes" of the Asserted Claims, or why a POSITA would find the "bipolar electrodes" of the Asserted Claims obvious in view of this disclosure. The parties agree that the terms "electrodes being bipolar" / "electrodes are bipolar" carry their plain and ordinary meaning, which is electrodes change or alternate between being positive or negative as the current alternates between them (as opposed to a monopolar configuration where current flows from one or more electrodes that deliver current to one or more ground electrodes). *See* July 21, 2023 Post-Markman JCCC.

[redacted]

But Respondents fail to explain how Lee 500 discloses bipolar electrodes under this agreed construction. Thus Respondents' invalidity contentions fail to provide any evidence that Lee 500 discloses bipolar electrodes.[13]

As another example, Lee 500 does not disclose providing or applying an Alternating Current (AC) Radio Frequency (RF) signal to the plurality of electrodes. *See* '836 Patent, claim 1 ("the RF generation module electrically coupled to the plurality of electrodes and configured to provide an Alternating Current (AC) RF signal to the plurality of electrodes"); '836 Patent, claim 14 ("applying a Alternating Current (AC) Radio Frequency (RF) signal to the plurality of electrodes"); '379 Patent, claim 1, and '444 Patent, claim 1 ("the RF generation module electrically coupled to the plurality of electrodes and configured to provide an RF signal with oscillating current to the plurality of electrodes"); '379 Patent, claim 10, and '444 Patent, claim 10 ("applying an RF signal with oscillating current to the plurality of electrodes").

Serendia notes that, as of the date of this response, the parties disagree over the appropriate construct of the terms "[a/an] Alternating Current (AC) [RF/Radio Frequency (RF)] signal" and "an RF signal with oscillating current." Under Serendia's (and Staff's) proposed construction, these terms carry their plain and ordinary meaning, which is "an electrical signal with oscillating current (current alternating polarities), and having a radio frequency (measured in MHz)." Under Respondents' proposed construction, "a signal combining an AC frequency rate and an RF frequency rate." Notably, Respondents fail to identify how Lee 500 discloses providing or applying

[13] Serendia also notes that, as of the time of these validity contention responses, the parties disagree regarding the construction of "a plurality of electrodes, the electrodes being bipolar" and "a plurality of electrodes … the electrodes are bipolar." Serendia understands that Staff and Respondents contend that there is disclaimer regarding certain electrode configurations in the prosecution history of the patents. While Serendia disagrees with these disclaimer arguments, to the extent these arguments succeed, these purportedly disclaimed configurations would not invalidate the claims.

[redacted]

an Alternating (or oscillating) Current (AC) Radio Frequency (RF) signal to the plurality of electrodes, under either construction.

Specifically, for these limitations, Respondents once again rely on the statement from Lee 500 that "needles adjacent to each other form a pair, each pair of needles 21 receiving 'positive (+),' and 'negative (-)' current." *See e.g., id*., Ex. A6 at 3 (citing Lee 500 at <30>)). Respondents then assert that:

> a person of ordinary skill in the art (POSA) would have been understood that "the needles adjacent to each other form a pair, each pair of needles 21 receiving 'positive (+),' and 'negative (-)' current" would be generated by a radio frequency generation module.
>
> Further, it was well-known in the art that a radio frequency signal is generated from alternating current (AC). *Radiofrequency Catheter Ablation for Cardiac Tachyarrhythmias*, Manolis, A.S., et al., Ann Intern Med. (1994) 121:452-461 at 452 ("Radiofrequency energy is a form of electrical energy, generated from low-power (15 to 60 V), high-frequency (30 KHz to 300 MHz) alternating current.").

Respondents' July 10, 2023 Invalidity Contentions, Ex. A6 at 5. But there is no dispute that Lee 500 does not mention alternating (or oscillating) current. Nor is there a dispute that Lee 500 does not mention the application of a radio frequency signal. Moreover, Respondents are wrong that the disclosure of alternating current (if such disclosure even existed here) is coextensive with the disclosure of radio frequency signals. For example, as discussed in U.S. 6,766,202 ("Underwood") – a *reference Respondents cite as prior art* – RF energy may also be applied as non-AC "voltage pulses" made at a rate within the radio frequency range, rather than via alternating current. *See* Underwood at 6:42-52 ("the voltage is usually delivered in a series of ***voltage pulses or alternating current*** of time varying voltage amplitude with a sufficiently high frequency (e.g., on the order of 5 kHz to 20 MHz)").[14] Thus Respondents' invalidity contentions fail to provide evidence that Lee

[14] Indeed, Respondents Lutronic, SHEnB, Rohrer, Ilooda, Cutera, Jeisys, Cynosure, and EndyMed all assert that their "RF" microneedle accused products do not satisfy the alternating (or oscillating

500 discloses providing or applying an Alternating Current (AC) Radio Frequency (RF) signal to the plurality of electrodes.

As another example, Lee 500 does not disclose a system or method "configured to cause coagulation around each electrode rather than coagulating between the electrodes" ('836 Patent, claims 1, 14), "apply[ing] energy to body segments around each electrode rather than to body segments between the electrodes" ('379 Patent, claims 1, 10); or "caus[ing] energy to be substantially applied to body segments around each electrode" ('444 Patent, claims, 1, 10). Indeed, Respondents' invalidity contentions do not cite ***any*** evidence that Lee 500 discloses this limitation, instead just asserting that "[i]t would have been obvious to the POSA that when energy from electrical current causes coagulation around each electrode rather than coagulating between the electrodes." Respondents' July 10, 2023 Invalidity Contentions, Exs. A6 at 6. But it is improper to rely on a person of skill's knowledge "as a wholesale substitute for reasoned analysis and evidentiary support, especially when dealing with a limitation missing from the prior art references specified." *Arendi S.A.R.L.*, 832 F.3d at 1362. Thus Respondents' invalidity contentions fail to provide evidence that Lee 500 discloses a system or method "configured to cause coagulation around each electrode rather than coagulating between the electrodes."

As another example, Lee 500 does not disclose "the predetermined time interval" which is "from 0.05 to 0.8 seconds," as required by claims 2, 4, 16, 17, and 22 of the '836 Patent. Indeed, Respondents' invalidity contentions identify no disclosure in Lee 500 regarding any "predetermined time interval," let alone a "predetermined time interval" between 0.05 to 0.8 seconds." Thus

---

current) radio frequency limitations of the Asserted Claims, directly contradicting the assertions in Respondents' invalidity contentions. *See, e.g.*, June 14, 2023 Interrogatory Responses.

Respondents' invalidity contentions fail to provide evidence that Lee 500 discloses "the predetermined time interval is from 0.05 to 0.8 seconds."

As another example, Lee 500 does not disclose "the closest neighboring electrodes have opposite polarities" ('836 Patent, claim 5; '379 Patent, claim 5), "the nearest electrodes having opposite polarities" ('444 Patent, claims 1, 10), "[t]he mammalian body treatment apparatus of claim 1, wherein the plurality of electrodes is arranged into a plurality of rows and columns and neighboring electrodes in each of the plurality of rows columns have opposite polarities" ('444 Patent, claim 5), "the plurality of electrodes forms a square configuration," ('444 Patent, claim 6), or "[t]he mammalian body treatment apparatus of claim 1, wherein the plurality of electrodes forms a rectangular configuration and their respective polarities form a checkboard pattern" ('444 Patent, claim 7).

Here, once again Respondents rely on the statement from Lee 500 that "needles adjacent to each other form a pair, each pair of needles 21 receiving 'positive (+),' and 'negative (-)' current." *See e.g., id.*, Ex. A6 at 10 (citing Lee 500 at <30>)). But neither this disclosure, nor the figures from Lee 500, disclose the polarity of the closest neighboring electrodes. Nor do Respondents' contentions identify any disclosure in Lee 500 related to electrodes arranged in a plurality of rows and columns with neighboring electrodes in each of the plurality of rows columns have opposite polarities, or where the electrodes form a square, rectangular, or checkboard pattern. Indeed, the figures from Lee 500 show a round electrode configuration:

[redacted]

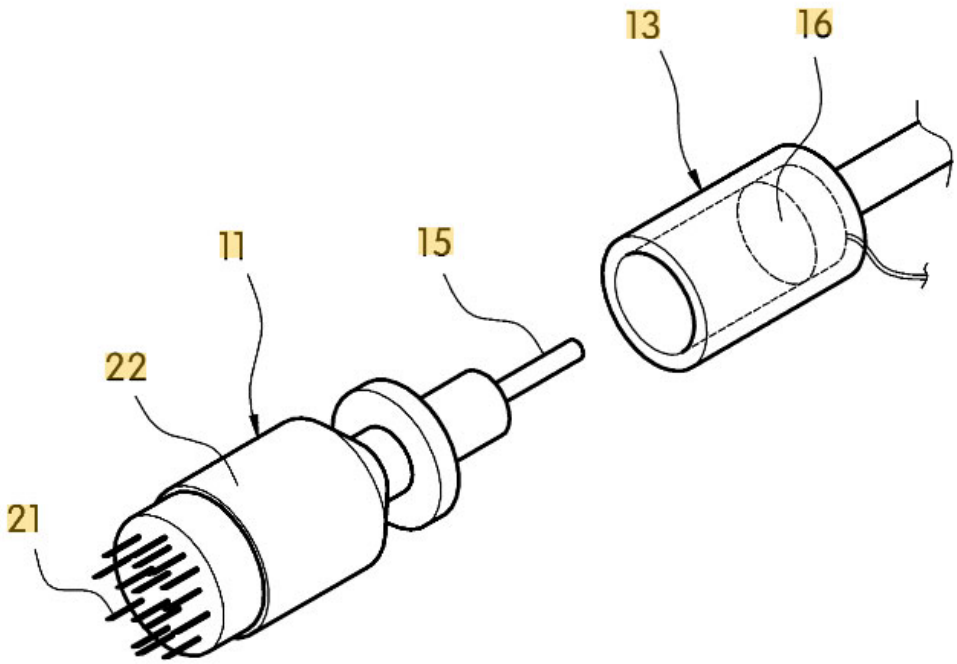

See Lee 500, FIG 2. Thus Respondents' invalidity contentions fail to provide evidence that Lee 500 discloses these limitations related to the electrode configurations.

As another example, Lee 500 does not disclose "[t]he skin treatment apparatus of claim 4, wherein a section of each electrode of the plurality of electrodes is non-insulated" ('836 Patent, claim 6), "[t]he skin treatment apparatus of claim 1, wherein the plurality of electrodes are non-insulated" ('836 Patent, claim 12), "[t]he mammalian body treatment apparatus of claim 1, wherein the plurality of electrodes are non-insulated" ('379 Patent, claim 8), "[t]he mammalian body treatment apparatus of claim 1, wherein the plurality of electrodes are non-insulated" ('444 Patent, claim 8), "[t]he skin treatment apparatus of claim 1, wherein each electrode of the plurality of electrodes is insulated except at its tip" ('836 Patent, claim 13), or "[t]he mammalian body treatment apparatus of claim 1, wherein each electrode of the plurality of electrodes is insulated except at its tip" ('379 Patent, claim 9; '444 Patent, claim 9).

Specifically, for these limitations, Respondents cite merely cite disclosure from Lee 500 that "[a]t this time, an electrical stimulus may be applied to the skin by way of the needles 21 through which electric current flows" and "[a]s described, the process is repeated multiple times with the microneedles moving back and forth to create hundreds to tens of thousands of holes on the human skin; and at the same time electrical stimulus can be applied using the current flowing through the needles." Respondents' July 10, 2023 Invalidity Contentions, Ex. A6 at 13 (citing Lee 500 at <63>, <66>)). But Respondents do not explain how either of the cited portions of Lee 500 disclose anything related to the insulation (or non-insulation) of the electrodes. Thus Respondents' invalidity contentions fail to provide evidence that Lee 500 discloses electrodes which are non-insulated, or insulated except at its tip.

As another example, Lee 500 does not disclose "[t]he skin treatment apparatus of claim 1, wherein the electrodes are needles and have a diameter from 0.25 mm to 0.30 mm," as required by claim 9 of the '836 Patent. Indeed, while Respondents' contentions cite to several paragraphs from Lee 500 as purportedly disclosing this limitation, none of the cited portions provide any disclosure regarding the needle diameters. *See, e.g.,* Respondents' July 10, 2023 Invalidity Contentions, Ex. A6 at 14. Thus Respondents' invalidity contentions fail to provide evidence that Lee 500 discloses needles with a diameter from 0.25 mm to 0.30 mm.

As another example, the Lee 500 does not disclose "the closest neighboring electrodes are separated by a distance of 1.3 mm to 3.0 mm," as required by claim 11 of the '836 Patent and claim 7 of the '379 Patent. Indeed, Respondents do not cite any disclosure from Lee 500 for this limitation. *See, e.g.,* Respondents' July 10, 2023 Invalidity Contentions, Ex. A6 at 12-13. Thus Respondents' invalidity contentions fail to provide evidence that Lee 500 discloses

As another example, Lee 500 does not disclose "[t]he method of treating skin of claim 14, wherein the RF is about 2.0 MHz and the coagulated area around each electrode is oval shaped,"

as required by claim 19 of the '836 Patent, or "[t]he method of treating a mammalian body of claim 10, wherein the RF is about 2.0 MHz and the section of the body segment around each electrodes where energy is applied is oval shaped," as required by claim 15 of the '379 Patent. Indeed, Respondents do not cite to any evidence for this limitation. Thus Respondents' invalidity contentions fail to provide evidence that Lee 500 discloses these limitations.

As another example, Lee 500 does not disclose "[t]he method of treating skin of claim 14, wherein the RF is from 0.5 to 10 Mhz and the predetermined time interval is from 0.05 to 0.8 seconds," as required by claim 22 of the '836 Patent. As discussed above, claim 14 requires "applying a Alternating Current (AC) Radio Frequency (RF) signal to the plurality of electrodes" which are "configured to cause coagulation around each electrode rather than coagulating between the electrodes," limitations which Lee 500 fails to disclose. And once again, Respondents have failed to identify any disclosure Lee 500 showing a predetermined time interval from 0.05 to 0.8 seconds. Moreover, Respondents contentions cite to no disclosure in Lee 500 of an RF "from 0.5 to 10 Mhz," once again simply repeating the incorrect assertion that "[i]t was well-known in the art that a radio frequency signal is generated from alternating current (AC)." Respondents' July 10, 2023 Invalidity Contentions, Ex. A6 at 22-23. Thus Respondents' invalidity contentions fail to provide evidence that Lee 500 discloses "[t]he method of treating skin of claim 14, wherein the RF is from 0.5 to 10 Mhz and the predetermined time interval is from 0.05 to 0.8 seconds."

Respondents attempt to gap-fill these glaring deficiencies in Lee 500 through a broad brush statement for each limitation that "[t]o the extent this limitation is not explicitly or inherently disclosed by this reference, or rendered obvious by the references disclosed herein, it would have further been obvious given the knowledge of a person of ordinary skill in the art and/or other references disclosed and/or charted in Respondents' Invalidity Contentions." *See, e.g.,*

Respondents' July 10, 2023 Invalidity Contentions, Exs. A6, B6, and C6 at *passim*. But Respondents' catch-all qualifications are inadequate to establish that any of the Asserted Claims are invalid. First, it is improper to rely on a person of skill's knowledge "as a wholesale substitute for reasoned analysis and evidentiary support, especially when dealing with a limitation missing from the prior art references specified." *Arendi S.A.R.L.*, 832 F.3d at 1362. Lee 500's deficiencies go to critical elements of the Asserted Claims that cannot be papered over with conclusory allegations about a POSITA's background knowledge. Second, as explained in the sections discussing Respondents' other invalidity charts, the other references Respondents try to combine with Lee 500 each themselves lack various limitations of the Asserted Claims. And Respondents have not cited a single reference that discloses providing or applying an Alternating Current (AC) Radio Frequency (RF) signal to the plurality of bipolar electrodes configured to cause coagulation around each electrode rather than coagulating between the electrode (or the similar claim limitations regarding how energy is applied).

Thus, Respondents have not established a *prima facie* case of anticipation or obviousness.

h. Exhibits A7, B7, and C7 ("Lee 552")

In Exhibits A7, B7, and C7, Respondents assert that:

> The asserted claims of the ['836, '379, and '444 Patents] are invalid under 35 U.S.C. § 102 (AIA or pre-AIA) as anticipated by Lee '522, and/or are invalid under 35 U.S.C. § 103 (AIA or pre-AIA) as obvious in view of Lee '522 alone, or in combination with one or more other references identified herein and/or in Respondents' Invalidity Contentions, at least based on Respondents' understanding of Complainant's application of the asserted claims in an effort to show infringement

Respondents' May 24, 2023 Invalidity Contentions, Exs. A7, B7, and C7.[15]

[15] Respondents' July 10, 2023 Final Invalidity Contentions did not include invalidity charts for the Lee 552 reference.

However, while Respondents identified Lee 552 in their May 24, 2023 Notice of Prior Art, on June 2, 2023 Respondents served an "Amended" Notice of Prior Art, which removed Lee 552 as a prior art reference. Thus, Respondents have withdrawn any prior art invalidity ground based whole or in part on Lee 552. To the extent Respondents are later permitted to assert invalidity based on this reference, Serendia reserves the right to respond.

i. Exhibits A8, B8, and C8 ("Mehta")

In Exhibits A8, B8, and C8, Respondents argue that "U.S. Patent No. 8,608,737 ('Mehta') qualifies as prior art under at least AIA 35 U.S.C. § 102(a)(1) because it is a patent that published before the filing of the earliest application to which [the '836, '379, and '444 Patents] could claim priority." *See* Respondents' July 10, 2023 Invalidity Contentions, Exs. A8, B8, and C8. Respondents also assert that "[t]o the extent that [the '836, '379, and '444 Patents] [are] subject to pre-AIA law, Mehta qualifies as prior art under at least 35 U.S.C. § 102(e) (pre-AIA) because it is a patent that was filed prior to the alleged invention of the ['836, '379, and '444 Patents]."

Respondents then contend that:

> The asserted claims of the ['836, '379, and '444 Patents] are invalid under 35 U.S.C. § 102 as anticipated by Mehta, and/or are invalid under 35 U.S.C. § 103 as obvious in view of Mehta alone, or in combination with one or more other references identified herein and/or in Respondents' Invalidity Contentions, at least based on Respondents' understanding of Complainant's application of the asserted claims in an effort to show infringement.

Id.

As an initial matter, Respondents' invalidity charts for Mehta are wholly deficient, as they often cite to ***pages*** of disclosure for each limitation of the Asserted Claims, without explaining how any of the cited disclosure relates to the relevant claim limitation. And in fact, much of what Respondents cite for each limitation appears to have no relevance to the limitations at issue. Respondents' Mehta invalidity charts thus fail to provide notice regarding what portions of this

reference Respondents intend to rely upon to assert the respective claims are invalid, and fail to demonstrate that Mehta anticipates or renders obvious any Asserted Claim.

Moreover, U.S. Patent No. 8,608,737 ('Mehta') issued from U.S. App. No. 12/426,705, which was published as U.S. Pat. Pub. 2010/0204695 ("Mehta 695 Pub"), and Mehta 695 Pub was explicitly considered during the prosecution of the '444 Patent. *See* '444 Patent Notice of Allowance ("In the Mehta reference (Pub. No.: US 2010/0204695 A1) the energy seemed to flow between bipolar needles (e.g. see figure 13), not around individual needles."). Another patent from the same inventor with similar disclosure and figures was also considered during the prosecution of the '379 Patent. *See, e.g.*, '379 Patent at References Cited (citing U.S. 8,540,705 to Mehta). And as the Federal Circuit has recognized, "it may be harder to meet the clear and convincing burden when the invalidity contention is based upon the same argument on the same reference that the PTO already considered." *Sciele Pharma Inc.*, 684 F.3d at 1260.

Additionally, the Mehta 695 Pub was already considered by the PTAB during the IPRs of the Asserted Patents, with the PTAB finding that Mehta did not contain adequate disclosure to even institute an IPR. *See, e.g.,* IPR2022-00594 ('836 Patent IPR Institution Decision) at 25 (finding "Petitioner has not reasonably shown that Mehta discloses or suggests a 'plurality of electrodes configured to cause coagulation around each electrode rather than coagulating between the electrodes.'"); IPR2022-00593 ('379 patent IPR Institution Decision) at 24 ("Because Mehta discloses and depicts fractional lesions (that is, coagulation} extending from one electrode to another electrode in a bipolar pair-or continuously between the electrodes-Petitioner has not shown a reasonable likelihood that Mehta discloses or suggests a 'apply energy to body segments around each electrode rather than to body segments between the electrodes.'"). Serendia incorporates by

reference its explanations why Mehta does not render the claims unpatentable in its POPRs and the reasons set forth by the PTAB in its IDs.

Regardless, even if Mehta was not already considered and rejected during the prosecution of the Asserted Patents *and* during the respective IPRs, as discussed below, Mehta does not anticipate or render obvious (either alone or in combination) the Asserted Claims of the '836, '379, and '444 Patents.

For example, Respondents have not shown that Mehta discloses bipolar electrodes, as required by the Asserted Claims. *See* '836 Patent, claims 1, 14; '379 Patent, claims 1, 10 (requiring "a plurality of electrodes, the electrodes being bipolar"); '444 Patent, claim 4 ("wherein the electrodes are bipolar"). Specifically, Respondents cite to ***pages*** of disclosure from Mehta for this limitation, without indicating what portion of this disclosure relates to the requisite "bipolar electrodes" of the asserted claims. *See, e.g.,* Respondents' July 10, 2023 Invalidity Contentions, Ex. A8 at 3-9 (citing Mehta, at 2:37-57; 2:63-3:17; 7:19-22; 9:34-55; Fig. 2A; 10:66-11:13; 12:23-30; Fig. 2B; 12:31-46; 12:47-58; 15:34-54; 15:55-16:11; Fig. 4A; 16:19-33; 16:34-41; 17:59-18:3; 18:4-20; 20:56-67; 21:1-13; Fig .7A; 21:14-21; 21:22-34; Fig. 7B; 21:34-42; 21:43-62; 22:7-18; 23:11-27; Fig. 7C; 23:55-24:4; Fig. 7E; Fig. 8A; 24:13-26; 24:27-35; Fig. 8B; 25:16-23; Fig. 8C; 25:30-55; 25:63-26:28; 31:37-41; 32:16-25; 32:26-45; Fig. 10A). The majority of this disclosure has nothing to do with the polarity of the electrodes however, and instead relates merely to the disclosure of electrode needles, agnostic to the electrical configuration. With respect to the polarity of the electrodes, Respondents assert that:

> The electrodes can be "bipolar." *Id*., at 9:43-48; see also id. at 17:59-18:3 ("adjacent electrode pairs can serve as opposite poles of a circuit"), 18:4-20 ("electrode pairs"), 25:30-55 ("5 bi-polar pairs" of "electrodes"), 36:21-40 ("bipolar RF electrode device"), 37:25-34 ("five electrode pairs 5," where "electrodes 104 of opposite polarity [are] in the electrode pair"), 40:45-57, Figs. 13A, 13B, 13C.

Respondents' July 10, 2023 Invalidity Contentions, Ex. A8 at 9. However, the parties agree that the terms "electrodes being bipolar" / "electrodes are bipolar" carry their plain and ordinary meaning, which is electrodes change or alternate between being positive or negative as the current alternates between them (as opposed to a monopolar configuration where current flows from one or more electrodes that deliver current to one or more ground electrodes). *See* July 21, 2023 Post-Markman JCCC. But Respondents have not identified disclosure from Mehta of electrodes which satisfy this requirement.[16] Indeed, as discussed below, Mehta makes no mention of alternating (or oscillating) current, and thus no makes no disclosure of electrodes which "change or alternate between being positive or negative as the current alternates." Thus Respondents' invalidity contentions fail to provide any evidence that Mehta discloses bipolar electrodes.

As another example, Mehta does not disclose providing or applying an Alternating Current (AC) Radio Frequency (RF) signal to the plurality of electrodes. *See* '836 Patent, claim 1 ("the RF generation module electrically coupled to the plurality of electrodes and configured to provide an Alternating Current (AC) RF signal to the plurality of electrodes"); '836 Patent, claim 14 ("applying a Alternating Current (AC) Radio Frequency (RF) signal to the plurality of electrodes"); '379 Patent, claim 1, and '444 Patent, claim 1 ("the RF generation module electrically coupled to the plurality of electrodes and configured to provide an RF signal with oscillating current to the plurality of electrodes"); '379 Patent, claim 10, and '444 Patent, claim 10 ("applying an RF signal with oscillating current to the plurality of electrodes").

[16] Serendia also understands that Staff and Respondents contend that there is disclaimer regarding certain electrode configurations in the prosecution history of the patents. While Serendia disagrees with these disclaimer arguments, to the extent these arguments succeed, these purportedly disclaimed configurations would not invalidate the claims.

Serendia notes that, as of the date of this response, the parties disagree over the appropriate construct of the terms "[a/an] Alternating Current (AC) [RF/Radio Frequency (RF)] signal" and "an RF signal with oscillating current." Under Serendia's (and Staff's) proposed construction, these terms carry their plain and ordinary meaning, which is "an electrical signal with oscillating current (current alternating polarities), and having a radio frequency (measured in MHz)." Under Respondents' proposed construction, "a signal combining an AC frequency rate and an RF frequency rate." Notably, Respondents fail to identify how Mehta discloses providing or applying an Alternating (or oscillating) Current (AC) Radio Frequency (RF) signal to the plurality of electrodes, under either construction.

Specifically, Respondents cite ***pages*** of disclosure from Mehta for these limitations, without indicating what portion of this disclosure relates to the requisite alternating (or oscillating) RF of the asserted claims. *See, e.g.,* Respondents' July 10, 2023 Invalidity Contentions, Ex. A8 at 12 (citing Mehta, at 2:58-62; 2:63-17; 7:16-18; 9:34-55; 11:14-20; 11:21-52; 17:59-18:3; 18:4-20; 18:4-20; 20:13-29; 24:46-60; 25:30-55; 26:41-59; 35:8-22; 37:25-34; Fig. 13A; 40:45-57; 41:40-43; 41:55-58; 42:9-15). Indeed, Mehta makes no mention of alternating (or oscillating) current at all. In fact, instead of identifying any portion of Mehta which discloses alternating (or oscillating) current, Respondents simply assert that:

> As shown in the discussion of element 1.2 above, Mehta's radio frequency generation module provides RF energy (an RF signal) to the plurality of electrodes. It was well-known in the art that a radio frequency signal is a high-frequency (30 KHz to 300 MHz) alternating current (AC). Radiofrequency Catheter Ablation for Cardiac Tachyarrhythmias, Manolis, A.S., et al., Ann Intern Med. (1994) 121:452-461 at 452. Moreover, it was well-known in the art that an alternating current (AC) is an oscillating current, and that an alternating current alternates polarities.
>
> Mehta gave the example of using a "bipolar RF electrode device" to provide an "RF" signal with "a frequency of 460 kHz." Mehta, at 36:21-40. "[A]djacent electrode pairs can serve as opposite poles of a circuit" (Id., at 17:59-18:3) between which current flows (Id., at 26:41-59, 37:25-34). 460 kHz is the equivalent of 0.46 Mhz.

[redacted]

> Thus, Mehta discloses providing an electrical signal with oscillating current (current alternating polarities), and having a radio frequency (measured in MHz).

See, e.g., id. at 12. But as discussed previously, Respondents are wrong that the disclosure of RF energy is coextensive with the disclosure of alternating current. For example, as discussed in U.S. 6,766,202 ("Underwood") – a *reference Respondents cite as prior art* – RF energy may also be applied as non-AC "voltage pulses" made at a rate within the radio frequency range, rather than via alternating current. *See* Underwood at 6:42-52 ("the voltage is usually delivered in a series of ***voltage pulses or alternating current*** of time varying voltage amplitude with a sufficiently high frequency (e.g., on the order of 5 kHz to 20 MHz)").[17] Thus Respondents' invalidity contentions fail to provide evidence that Mehta discloses providing or applying an Alternating Current (AC) Radio Frequency (RF) signal to the plurality of electrodes.

As another example, Mehta does not disclose a system or method "configured to cause coagulation around each electrode rather than coagulating between the electrodes" ('836 Patent, claims 1, 14), "apply[ing] energy to body segments around each electrode rather than to body segments between the electrodes" ('379 Patent, claims 1, 10); or "caus[ing] energy to be substantially applied to body segments around each electrode" ('444 Patent, claims, 1, 10). Specifically, Respondents cite ***pages*** of disclosure from Mehta for these limitations, without indicating what portion of this disclosure relates to the requisite alternating (or oscillating) RF of the asserted claims. *See, e.g.,* Respondents' May 24, 2023 Invalidity Contentions, Ex. A8 at 13-14 (citing Mehta, at 1:27-31; 1:32-42; 1:65-2:2; 2:3-12; 2:13-21; 2:22-29; 2:58-62; 3:57-67; 5:26-33; 5:49-57; 5:58-6:2; 7:40-44; 8:13-23; 8:45-53; 8:54-65; 10:8-16; 10:17-25; 10:53-65; 12:5-14; 17:59-

[17] Indeed, Respondents Lutronic, SHEnB, Rohrer, Ilooda, Cutera, Jeisys, Cynosure, and EndyMed all assert that their "RF" microneedle accused products do not satisfy the alternating (or oscillating current) radio frequency limitations of the Asserted Claims, directly contradicting the assertions in Respondents' invalidity contentions. *See, e.g*., June 14, 2023 Interrogatory Responses.

18:3; 18:4-20; 18:64-19:8; 19:17-25; 19:26-44; 19:45-65; 19:66- 20:12; 20:13-29; 20:29-47; 22:53-62; 24:5-12; 24:46-60; 25:24-29; 25:30-55; 25:64-67; 26:41-59; 26:60-27:22; 35:8-22; 36:54-37:6; 37:25-34; Fig. 13A; 37:35-41; 37:42-64; 37:65-38:21; 38:22-57; 38:58-67; 39:1-8; 39:9-27; 39:28-41; 39:58-40:4; 40:5-38; 40:39-44). But none of the disclosure Respondents cite evidence disclosure of these limitations. Indeed, as discussed above, Mehta was already considered during prosecution of the Asserted Patents, as well as during the respective IPRs, with the Examiner and PTAB concluding that these limitations were not disclosed. *See, e.g.,* '444 Patent Notice of Allowance ("In the Mehta reference (Pub. No.: US 2010/0204695 A1) the energy seemed to flow between bipolar needles (e.g. see figure 13), not around individual needles."); IPR2022-00594 ('836 Patent IPR Institution Decision) at 25 (finding "Petitioner has not reasonably shown that Mehta discloses or suggests a 'plurality of electrodes configured to cause coagulation around each electrode rather than coagulating between the electrodes.'"); IPR2022-00593 ('379 patent IPR Institution Decision) at 24 ("Because Mehta discloses and depicts fractional lesions (that is, coagulation} extending from one electrode to another electrode in a bipolar pair-or continuously between the electrodes-Petitioner has not shown a reasonable likelihood that Mehta discloses or suggests a 'apply energy to body segments around each electrode rather than to body segments between the electrodes.'"). The Patent Office's patentability determinations were correct, and Respondents do not identify any way in which the Patent Office allegedly erred.

Recognizing that Metha does not disclose the application of coagulation / energy around needle electrodes (instead of between them), in Respondents' July 10, 2023 Final Invalidity Contentions, Respondents now argue that the limitations requiring coagulation / energy to be applied around each electrode without extending between each electrode are inherently disclosed. *See id.* at 13-16. But as discussed above, *supra* at Section A.2.a, Respondents' inherency arguments fail

[redacted]

as a matter of law. Indeed, Mehta teaches applying energy / coagulation ***between*** electrodes (rather than around each of them), as shown in the below figures:

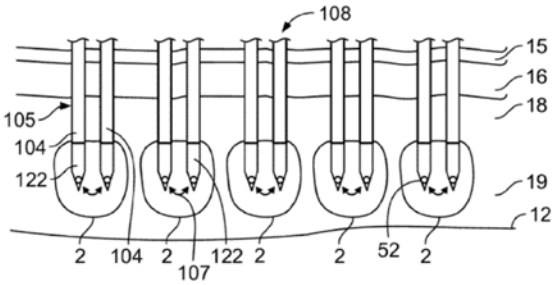

FIG. 13A

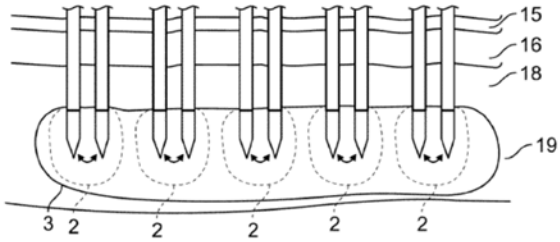

FIG. 13B

Faced with the disclosure in Mehta teaching the opposite of what the claims require, Respondents nevertheless argue that these limitations would be obvious to a POSITA, stating that:

> For example, Mehta disclose that, "[a]s shown in FIG. 143B, when desired, the width of the fractional lesion [collagen] 2 can be increased as the time-at-temperature is increased," which can be done by "adjusting pulse duration." *Id*., at 37:35-41. Conversely, this means it was known that coagulation is found closer to a given electrode as the time-at-temperature / pulse duration is decreased.

Id. at 17-18.

Respondents further point to disclosure in Mehta which discusses the benefit of creating "small focal lesions," otherwise called "fractional technology." *Id*. at 18. Respondents thus conclude that:

> Mehta disclosed that it is more optimal (for healing purposes) to have smaller discrete zones of coagulation (formed by reducing the time-at-temperature/pulse duration) than larger continuous zones of coagulation formed by larger time-at temperature/pulse duration application, and Mehta discloses to adjust the time-at-temperature based on the treatment application.

> Accordingly, it would have been obvious to a POSITA to use a low enough time-at-temperature/pulse duration setting to achieve coagulation around each electrode and not between electrodes to create the least amount of collateral damage (in order to decrease chances of scarring and speed up the healing process).

Id. at 19; *see also id*. at 19-24 (discussing the control mechanisms in Mehta). Respondents further contend that Mehta discloses controlling certain parameters to achieve a desired coagulative result, like the '836 Patent. *See* id. at 24.

But as discussed above, Mehta actually teaches the opposite of applying coagulation / energy around each electrode (rather than between them), and Respondents provide no cogent reason why disclosure of merged / continuous treatment patterns ***between*** electrodes would inform a POSITA to apply coagulation / energy in discrete locations ***around*** each electrodes (instead of between them). Indeed, as discussed above, both the Examiner and PTAB reviewed related applications with the same types of disclosure showing continuous application of energy / coagulation between electrodes and both the Examiner and PTAB found such prior art did not disclose the subject limitations (literally or inherently). *See, e.g.,* '444 Patent Notice of Allowance ("In the Mehta reference (Pub. No.: US 2010/0204695 A1) ***the energy seemed to flow between bipolar needles (e.g. see figure 13), not around individual needles***."); IPR2022-00594 ('836 Patent IPR Institution Decision) at 25 (finding "***Petitioner has not reasonably shown that Mehta discloses or suggests a 'plurality of electrodes configured to cause coagulation around each electrode rather than coagulating between the electrodes***.'"); IPR2022-00593 ('379 patent IPR Institution Decision) at 24 ("Because Mehta discloses and depicts fractional lesions (that is, coagulation) extending from one electrode to another electrode in a bipolar pair-or ***continuously between the electrodes***-Petitioner has not shown a reasonable likelihood that Mehta discloses or suggests a 'apply energy to body segments around each electrode rather than to body segments between the electrodes.'"). Respondents are thus trying to present the same invalidity argument that has now

twice been rejected. Thus Respondents' invalidity contentions fail to provide evidence that Mehta discloses a system or method "configured to cause coagulation around each electrode rather than coagulating between the electrodes" (or the similar limitations regarding the application of energy around each electrode, rather than between them).

As another example, Mehta does not disclose "the predetermined time interval" which is "from 0.05 to 0.8 seconds," as required by claims 2, 4, 16, 17, and 22 of the '836 Patent. Specifically, Respondents cite ***pages*** of disclosure from Mehta for this limitation, without indicating what portion of this disclosure relates to the requisite predetermined timer interval from 0.05 to 0.8 seconds. *See, e.g.,* Respondents' July 10, 2023 Invalidity Contentions, Ex. A8 at 26 (citing Mehta, at 3:42-55; 18:64-19:8; 19:26-44; 19:45-65; 20:13-28; 20:29-55; Fig. 6; 27:66-28:6; 28:49-50; 34:14-24; 40:5-38). And while Respondents point to disclosure in Mehta of treatment "for a predetermined time" (*see id.*), Respondents identify no disclosure in Mehta regarding a treatment time "from 0.05 to 0.8 seconds." Thus Respondents' invalidity contentions fail to provide evidence that Mehta discloses "the predetermined time interval is from 0.05 to 0.8 seconds."

As another example, Mehta does not disclose "[t]he mammalian body treatment apparatus of claim 1, wherein the plurality of electrodes is arranged into a plurality of rows and columns and neighboring electrodes in each of the plurality of rows columns have opposite polarities" ('444 Patent, claim 5), or "the plurality of electrodes forms a square configuration," ('444 Patent, claim 6), "[t]he mammalian body treatment apparatus of claim 1, wherein the plurality of electrodes forms a rectangular configuration and their respective polarities form a checkboard pattern" ('444 Patent, claim 7). Indeed, none of the citations Respondents' rely upon disclose the requisite electrode configurations at all. *See, e.g.,* Respondents' July 10, 2023 Invalidity Contentions, Ex. A8

[redacted]

at *passim*. Moreover, Mehta teaches away from the electrode configurations of the Asserted Claims, with Mehta disclosing a system with a single row of electrode pairs:

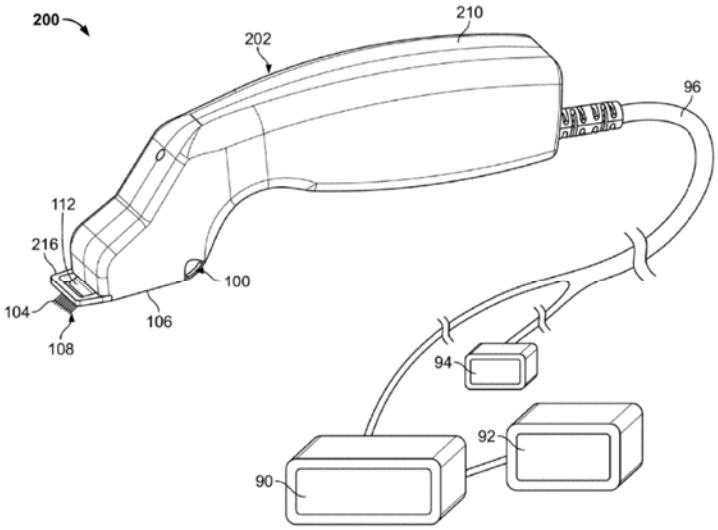

FIG. 2A

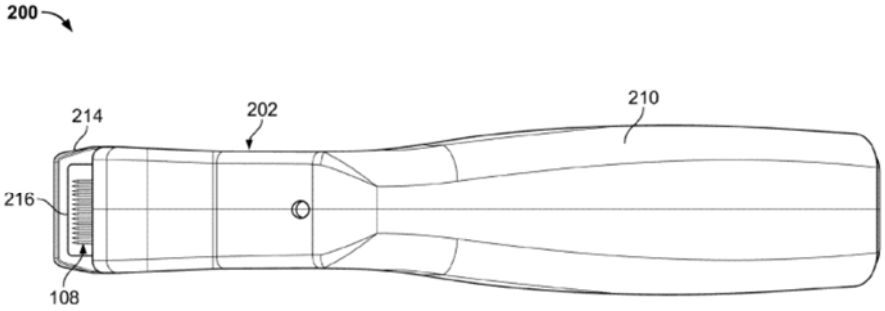

FIG. 2C

Thus Respondents' invalidity contentions fail to provide evidence that Mehta discloses the electrode configurations of the Asserted Claims.

As another example, Mehta does not disclose "[t]he skin treatment apparatus of claim 1, wherein the plurality of electrodes are non-insulated" ('836 Patent, claim 12), "[t]he mammalian body treatment apparatus of claim 1, wherein the plurality of electrodes are non-insulated" ('379

Patent, claim 8), "[t]he mammalian body treatment apparatus of claim 1, wherein the plurality of electrodes are non-insulated" ('444 Patent, claim 8). Indeed, Respondents identify no portion of Mehta disclosing non-insulated electrodes. Nor could they, as Mehta instead discloses ***insulated*** electrodes. *See, e.g.*, Mehta at 16:1-8; 16:65-17:3; 36:26-28. Faced with this conflicting disclosure, Respondents assert that:

> A person of ordinary skill in the art would have known that the default for medical needles is that they are not coated with insulation.
>
> As discussed above in regard to limitation 1.4, Mehta delivers RF energy to the skin via the electrodes. In order to deliver energy to tissue via the electrodes, the only options would have been non-insulated needle electrodes or partially insulated needle electrodes. Therefore, with only two choices, it would have been obvious to try using non-insulated needle electrodes.

Id. at 32. But it is improper to rely on a person of skill's knowledge "as a wholesale substitute for reasoned analysis and evidentiary support, especially when dealing with a limitation missing from the prior art references specified." *Arendi S.A.R.L.*, 832 F.3d at 1362. Here, there is no dispute that Mehta does not disclose non-insulated electrodes, and in fact explicitly discloses the use of ***insulated*** electrodes. Moreover, as discussed in the '836 Patent's specification, prior to the invention of the '836 Patent, the use of non-insulated electrodes was disfavored, as they could cause unwanted damage to the surrounding tissue during treatment. *See* '836 Patent, at 2:19-20 ("[t]o limit epidermis burning the needles may be insulated except at the tip portion."). Thus Respondents' invalidity contentions fail to provide evidence that Mehta discloses electrodes which are non-insulated.

As another example, Mehta does not disclose "[t]he skin treatment apparatus of claim 1, wherein the electrodes are needles and have a diameter from 0.25 mm to 0.30 mm," as required by claim 9 of the '836 Patent. Specifically, Respondents cite ***pages*** of disclosure from Mehta for this limitation, without indicating what portion of this disclosure relates the needle diameter. *See, e.g.,*

Respondents' July 10, 2023 Invalidity Contentions, Ex. A8 at 30-31 (citing Mehta, at 10:8-16; 10:17-25; 12:23-30; Fig. 2B; 12:47-58; 16:59-17:12; 21:22-34; Fig. 7B; 21:34-42; 31:37-41; 36:21-40; 37:7-17; 40:45-57). In fact, Mehta discloses needles outside the claimed range. For example, Mehta explains that "[p]atients were treated with an investigational 35 W bipolar RF device . . . configured with five pairs of 30 gauge electrodes." Mehta at 36:21-23. But "30 gauge electrodes" corresponds to electrodes with a diameter of 0.312 mm,[18] and thus Respondents' invalidity contentions fail to provide evidence that Mehta system discloses needles with a diameter from 0.25 mm to 0.30 mm.

As another example, Mehta does not disclose "[t]he method of treating skin of claim 14, wherein the RF is about 2.0 MHz and the coagulated area around each electrode is oval shaped," as required by claim 19 of the '836 Patent, or "[t]he method of treating a mammalian body of claim 10, wherein the RF is about 2.0 MHz and the section of the body segment around each electrodes where energy is applied is oval shaped," as required by claim 15 of the '379 Patent. Indeed, Mehta discloses an "RF frequency output of 460 kHz +/- 5 kHz." Mehta at 36:21-24. And Respondents do not identify any coagulated area or energy application which is "oval shaped." Thus Respondents' invalidity contentions fail to disclose these requisite limitations.

As another example, Mehta does not disclose "[t]he method of treating skin of claim 14, wherein the RF is from 0.5 to 10 Mhz and the predetermined time interval is from 0.05 to 0.8 seconds," as required by claim 22 of the '836 Patent. As discussed above, claim 14 requires "applying a Alternating Current (AC) Radio Frequency (RF) signal to the plurality of electrodes" which are "configured to cause coagulation around each electrode rather than coagulating between

[18] *See, e.g.*, https://www.hamiltoncompany.com/laboratory-products/needles-knowledge/needle-gauge-chart.

the electrodes," limitations which Mehta fails to disclose. And once again, Mehta discloses an frequency outside of this range. *See* Mehta at 36:21-24 (discussing an "RF frequency output of 460 kHz +/- 5 kHz").

Respondents attempt to gap-fill these glaring deficiencies in Mehta through a broad brush statement for each limitation that "[t]o the extent this limitation is not explicitly or inherently disclosed by this reference, or rendered obvious by the references disclosed herein, it would have further been obvious given the knowledge of a person of ordinary skill in the art and/or other references disclosed and/or charted in Respondents' Invalidity Contentions." Respondents' July 10, 2023 Invalidity Contentions, Exs. A8, B8, and C8 at *passim*. But Respondents' catch-all qualifications are inadequate to establish that any of the Asserted Claims are invalid. First, it is improper to rely on a person of skill's knowledge "as a wholesale substitute for reasoned analysis and evidentiary support, especially when dealing with a limitation missing from the prior art references specified." *Arendi S.A.R.L.*, 832 F.3d at 1362. Mehta's deficiencies go to critical elements of the Asserted Claims that cannot be papered over with conclusory allegations about a POSITA's background knowledge. Second, as explained in the sections discussing Respondents' other invalidity charts, the other references Respondents try to combine with Mehta each themselves lack various limitations of the Asserted Claims. And Respondents have not cited a single reference that discloses providing or applying an Alternating Current (AC) Radio Frequency (RF) signal to the plurality of electrodes configured to cause coagulation around each electrode rather than coagulating between the electrodes.

Thus, Respondents have not established a *prima facie* case of anticipation or obviousness.

j. Exhibits A9, B9, and C9 ("Miratone")

In Exhibits A9, B9, and C9, Respondents argue that "[t]he Primaeva Medical Miratone System (also known as the Renesis System) (hereinafter "Miratone") qualifies as prior art under

at least 35 U.S.C. § 102(a)." Respondents' May 24, 2023 Invalidity Contentions, Exs. A9, B9, and C9. Respondents then contend that:

> The asserted claims of the ['836, '379, and '444 Patents] are invalid under 35 U.S.C. § 102 as anticipated by Miratone, and/or are invalid under 35 U.S.C. § 103 as obvious in view of Miratone alone, or in combination with one or more other references identified herein and/or in Respondents' Invalidity Contentions, at least based on Respondents' understanding of Complainant's application of the asserted claims in an effort to show infringement.

Id.

As an initial matter, Respondents have not established that the Miratone system qualifies as prior art. As discussed above, the '836, '379, and '444 Patents are entitled to a priority date before March 16, 2013, meaning pre-AIA framework applies when assessing whether a reference or system is prior art. Specifically, the '836 patent claims priority to U.S. application no. 14/006,930, filed on June 14, 2012, and Korean application nos. 10-2011-0057691 and 10-2011-0057692, both filed on June 14, 2011. The Asserted Claims are entitled to an effective U.S. filing date of June 14, 2012, and an effective foreign filing date of June 14, 2011.

Under pre-AIA 35 U.S.C. 102, a prior art system has to be "known or used by others in this country … before the invention thereof by the applicant for patent" (pre-AIA 102(a)), or "… in public use or on sale in this country, more than one year prior to the date of the application for patent in the United States" (pre-AIA 102(b)). Respondents have expressly chosen to rely on the Miratone system itself, rather than published information about this system that might qualify as prior art on other bases, and thus must establish that the system itself meets the requirements to constitute prior art under U.S. law. However, Respondents have not shown that the Miratone system was "known or used by others in this country" prior to either the U.S. filing date of June 14, 2012, or the effective foreign filing date of June 14, 2011. Nor have Respondents shown that

the Miratone system was "in public use or on sale in this country" prior to June 14, 2011 (one year prior to the June 14, 2012 date of the application for patent in the United States).

Instead, Respondents contend that "***[o]n information and belief***, Miratone was offered for sale, sold, and/or used in the United States by at least September 1, 2009 and is therefore prior art to the '836 Patent." *See, e.g.*, Respondents' July 10, 2023 Invalidity Contentions, Ex. A9, at 1. But Respondents provide no evidence that the Miratone system was "offered for sale," "sold," or "used" in the United States prior to June 14, 2011. And while Respondents point to FDA filings and scholarly articles about the Miratone system, the evidence Respondents cite: 1) do not indicate where any such products were actually used (or used in the United States); and 2) relate to multiple distinct products, including the Primaeva Medical "Renesis" product, as well as the Primaeva Medical "Miratone" product, which Respondents improperly cobble together without any evidence that these references describe a single product. *See, e.g.*, Primaeva Miratone K082391 - FDA decision.pdf (Ilooda-0004850 at pdf pages 663-702 ("***Miratone*** Instructions"); *id*. at pdf pages 486-528 ("***Renesis*** User Manual"); Hantash, et al., *Pilot Clinical Study of a Novel Minimally Invasive Bipolar Microneedle Radio Frequency Device*, LASERS IN SURGERY AND MEDICINE 41:87–95 (2009) ("Hantash 2009") (RESPONDENTS_PA0000398 at 399) (discussing the "***RenesisTM***, Primaeva Medical" device); *id.* at RESPONDENTS_PA0000403 ("The results of this study have shown that the ***Renesis system*** can create radiofrequency thermal zones (RFTZTM) within the reticular dermis."); Berube, et al., *A Predictive Model of Minimally Invasive Fractional Radiofrequency Skin Treatment*, LASERS IN SURGERY AND MEDICINE 41:473–478 (2009) ("Berube") (RESPONDENTS_ PA0000138 at 139 (discussing the "[t]he bipolar FRF device (***MiratoneTM*,** Primaeva Medical, Inc., Pleasanton, CA) modeled in this study…"); Armenakas, et al., *Blinded, Randomized, Quantitative Grading Comparison of Minimally Invasive, Fractional*

[redacted]

Radiofrequency and Surgical Face-lift to Treat Skin Laxity, ARCH DERMATOL. 2010; 146(4):396–405 ("Alexiades") (Ilooda-0006760 at 761) (discussing "the ***Miratone*** minimally invasive bipolar fractional RF (FRF) system.*"*). In fact, the evidence shows that the product used to obtain FDA clearance was not a full functioning Miratone product but rather a few components assembled outside a console and controlled by a separate laptop. Renton Dep. Tr. at 193:16-194:10; 266:24-267:10.

Moreover, while Respondents' July 10, 2023 Final Invalidity Contentions cite to additional evidence produced by third-party Candela Medical Inc. ("Candela") purportedly related to the Miratone system (*see* Respondents' July 10, 2023 Invalidity Contentions, Ex. A9, at 1), like Respondents' prior cited materials, none of these additional documents provide evidence that the Miratone system was "offered for sale," "sold," or "used" in the United States prior to June 14, 2011. And once again, Respondents appear to similarly be cobbling together references related to multiple distinct products.

For example, CMI-000405, cited in Respondents' contentions, is an article about the pre-launch of the ePrime in ***the United Kingdom***, not the United States. Similarly, the "ePrime Medical Device License" Respondents' cite is a license for ***Canada***, not the United States. *See* CMI-000203. Additionally, while Respondents cite to user manuals and reference guides to the ePrime system, none of these documents evidence when, where, or how the system was used or sold. Indeed, both the user manual and the quick reference guide Respondents cite for the ePrime system include a "Do Not Use" label, calling into question whether these documents were ever publicly distributed:

[redacted]

Do Not Use
21-Jul-10
Copyright © 201

Do Not Use
ePrime Qui
24-Jan-11
Recommended

CMI-000109 (ePrime User Manual); CMI-000195 (ePrime Quick Reference Guide).

And once again, Respondents appear to be cobbling together evidence from multiple devices introduced at different times in different locations with different features. In addition to the Miratone and Renesis systems discussed above, Respondents now seek to introduce evidence from a different "ePrime" product, without providing evidence that the ePrime product is the same as the Renesis and/or Miratone systems discussed in the other references Respondents have cited. Respondents even go so far as to cite to a *fourth* product as purportedly related to the Miratone system prior art. Specifically, as part of its evidence for the Miratone system prior art, Respondents now cite to an FDA 510k approval letter from September 12, 2016 for the "Profound" microneedling system. *See* CMI-000186. But Respondents have not shown how the "Profound" microneedling system FDA letter relates to the Miratone system, or why it would be considered relevant to the prior art analysis given the September 12, 2016 date.

Respondents have not shown that any Miratone system was in public use practicing the asserted method claims or that such a system in public use or on sale, or otherwise available to the public, was configured to practice the asserted system claims. To the contrary, the evidence shows that the purported Miratone system was not publicly displayed as a functioning product. Renton Dep. Tr. at 29:22-30:25; 182:12-16; 193:16-194:10. Because Respondents have failed to establish that the Miratone system qualifies as prior art, Respondents have failed to present a *prima facie* case of anticipation and/or obviousness in view of the Miratone system. Regardless, even if the

Miratone system did qualify as prior art to the ’836, ’379, and ’444 Patents (and it does not), the Miratone system does not anticipate or render obvious (either alone or in combination) the Asserted Claims of the ’836, ’379, and ’444 Patents.

For example, Miratone system does not disclose providing or applying an Alternating Current (AC) Radio Frequency (RF) signal to the plurality of electrodes. *See* ’836 Patent, claim 1 (“the RF generation module electrically coupled to the plurality of electrodes and configured to provide an Alternating Current (AC) RF signal to the plurality of electrodes”); ’836 Patent, claim 14 (“applying a Alternating Current (AC) Radio Frequency (RF) signal to the plurality of electrodes”); ’379 Patent, claim 1, and ’444 Patent, claim 1 (“the RF generation module electrically coupled to the plurality of electrodes and configured to provide an RF signal with oscillating current to the plurality of electrodes”); ’379 Patent, claim 10, and ’444 Patent, claim 10 (“applying an RF signal with oscillating current to the plurality of electrodes”).

Serendia notes that, as of the date of this response, the parties disagree over the appropriate construct of the terms “[a/an] Alternating Current (AC) [RF/Radio Frequency (RF)] signal” and “an RF signal with oscillating current.” Under Serendia’s (and Staff’s) proposed construction, these terms carry their plain and ordinary meaning, which is “an electrical signal with oscillating current (current alternating polarities), and having a radio frequency (measured in MHz).” Under Respondents’ proposed construction, “a signal combining an AC frequency rate and an RF frequency rate.” Notably, Respondents fail to identify how Miratone system discloses providing or applying an Alternating (or oscillating) Current (AC) Radio Frequency (RF) signal to the plurality of electrodes, under either construction.

Specifically, Respondents fail to cite to ***any*** disclosure that the Miratone system applies alternating (or oscillating) current radio frequency signals to the plurality of electrodes. Instead,

Respondents cite to disclosure from different references discussing the use of bipolar needles, along with the application of RF energy. *See* Respondents' July 10, 2023 Invalidity Contentions, Ex. A9 at 4-6. But as discussed above, it is not even clear these references are even talking about the same system, as Respondents have cited references related to at least four different distinct products (i.e., the Miratone, Renesis, ePrime, and Profound systems). Moreover, as discussed above, there mere mention of RF energy does not equate to the disclosure of alternating current. As discussed in U.S. 6,766,202 ("Underwood") – a *reference Respondents cite as prior art* – RF energy may also be applied as non-AC "voltage pulses" made at a rate within the radio frequency range, rather than via alternating current. *See* Underwood at 6:42-52 ("the voltage is usually delivered in a series of ***voltage pulses or alternating current*** of time varying voltage amplitude with a sufficiently high frequency (e.g., on the order of 5 kHz to 20 MHz)").[19]

Additionally, while the Miratone system discusses the use of "bipolar" electrodes. Respondents have not established that the Miratone system discloses the "bipolar electrodes" required by the Asserted Claims. For example, the parties agree that the terms "electrodes being bipolar" / "electrodes are bipolar" carry their plain and ordinary meaning, which is electrodes change or alternate between being positive or negative as the current alternates between them (as opposed to a monopolar configuration where current flows from one or more electrodes that deliver current to one or more ground electrodes). *See* July 21, 2023 Post-Markman JCCC. But Respondents fail to explain how the Miratone system discloses bipolar electrodes under this agreed construction, and have thus

[19] Indeed, Respondents Lutronic, SHEnB, Rohrer, Ilooda, Cutera, Jeisys, Cynosure, and EndyMed all assert that their "RF" microneedle accused products do not satisfy the alternating (or oscillating current) radio frequency limitations of the Asserted Claims, directly contradicting the assertions in Respondents' invalidity contentions. *See, e.g.*, June 14, 2023 Interrogatory Responses.

further failed to explain how the "bipolar" configuration cited in the references Respondents rely upon necessarily disclose a system which applies an alternating (or oscillating) current.[20]

Thus Respondents' invalidity contentions fail to provide evidence that Miratone system discloses providing or applying an Alternating Current (AC) Radio Frequency (RF) signal to the plurality of electrodes.[21]

As another example, Miratone system does not disclose a system or method "configured to cause coagulation around each electrode rather than coagulating between the electrodes" ('836 Patent, claims 1, 14), "apply[ing] energy to body segments around each electrode rather than to body segments between the electrodes" ('379 Patent, claims 1, 10); or "caus[ing] energy to be substantially applied to body segments around each electrode" ('444 Patent, claims, 1, 10). Specifically, for these limitations, Respondents cite to disclosure from scholarly articles related to the purported Miratone system which state that use of the system "illustrated the controlled creation of dermally located lesions known as RFTZs" (*see, e.g.,* Respondents' July 10, 2023 Invalidity Contentions, Ex. A9 at 11-12 (citing Hantash 2009 at 94)), and "[t]hrough the use of a direct real-time temperature and impedance feedback system, we showed that fractional radiofrequency (FRF) treatment led to the controlled creation of dermally located thermal coagulation zones, known as radiofrequency thermal zones (RFTZs)" (*see, e.g., id*. (citing Berube at 473)). But while these disclosures discuss coagulation zones, nothing in any of the Miratone system refences Respondents cite

---

[20] Respondents also cite to the system having power requirements of "120 VAC, 60 Hz, 500 mA." *See, e.g*., Respondents' July 10, 2023 Invalidity Contentions, Ex. A9 at 11(citing Miratone User Manual at 35 (Ilooda-0004850 (Primaeva Miratone K082391.pdf) at pdf p. 697). But the input power characteristics of the device does not indicate what type of current the device outputs.

[21] Serendia also understands that Staff and Respondents contend that there is disclaimer regarding certain electrode configurations in the prosecution history of the patents. While Serendia disagrees with these disclaimer arguments, to the extent these arguments succeed, these purportedly disclaimed configurations would not invalidate the claims.

[redacted]

discloses focusing energy or coagulation around the electrodes *rather than between them*, or substantially applying energy around each electrode. Indeed, the Miratone system references Respondents rely upon expressly teach away from these limitations. For example, Berube *et al*. shows the Miratone system generating energy *between* the electrode pairs:

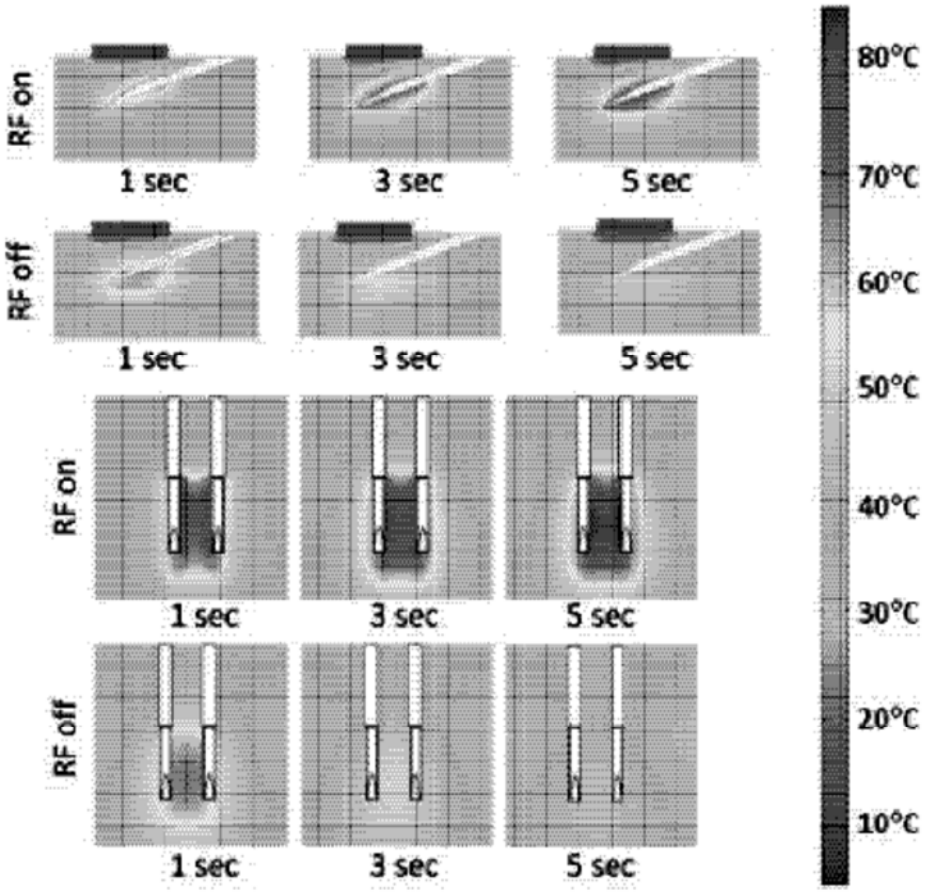

Fig. 5. Thermal profiles at 1, 3, and 5 seconds during and after RF application for a target temperature of 70°C (top, cross-section along one needle; bottom, plane containing both needles).

Similarly, Alexiades *et al*. shows the Miratone system electrode configuration with the energy distribution once again extending *between* the electrode pairs:

[redacted]

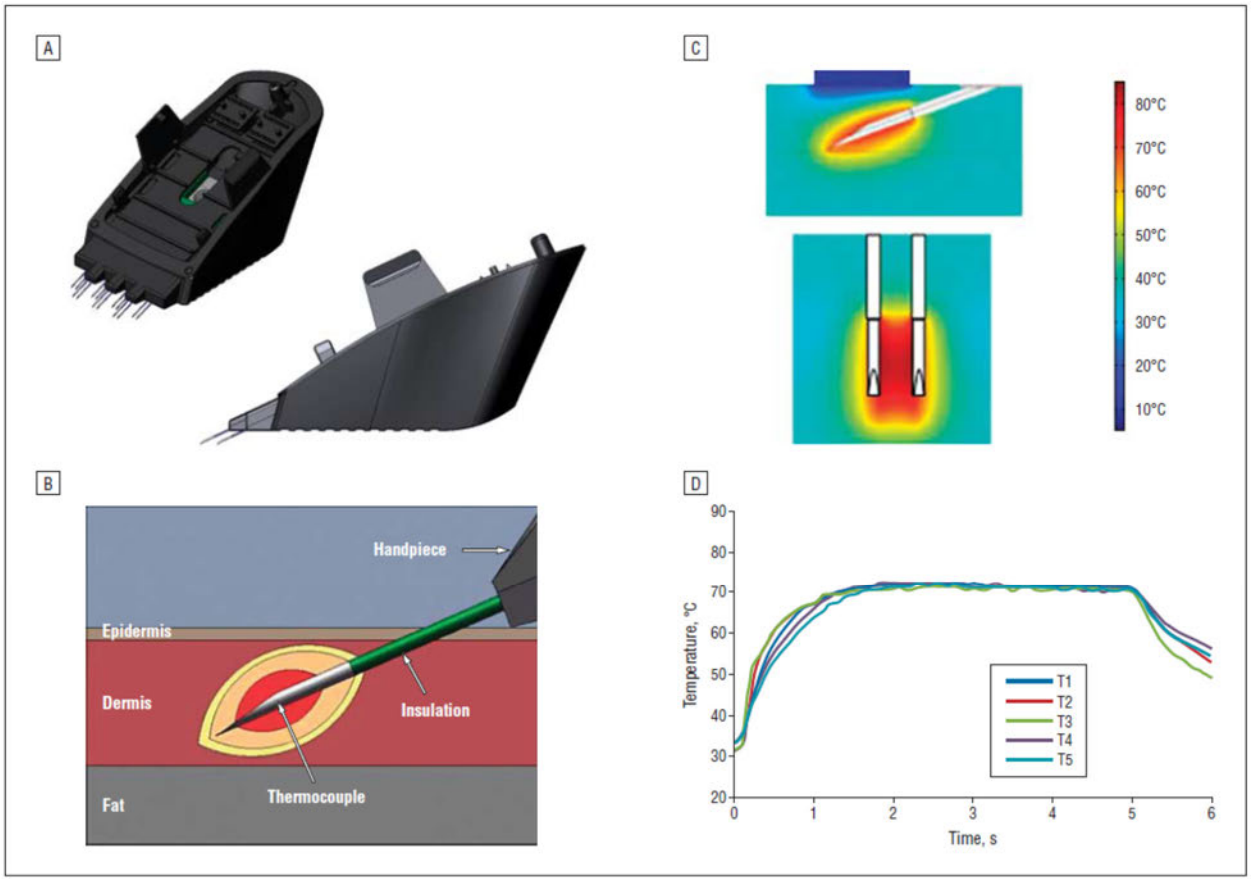

Alexiades *et al*., FIG 1. Thus Respondents' invalidity contentions fail to provide evidence that Miratone system discloses these requisite limitations.[22]

As another example, the Miratone system does not disclose "the predetermined time interval" which is "from 0.05 to 0.8 seconds," as required by claims 2, 4, 16, 17, and 22 of the '836 Patent. Specifically, for this limitation, Respondents cite to disclosure from the Miratone User Manual that the RF Output Duty Cycle is "Adjustable 10–50 ms on for every 100 ms." *See, e.g.,* Respondents' July 10, 2023 Invalidity Contentions, Ex. A9 (Miratone User Manual at 35 (Ilooda-0004850 (Primaeva Miratone K082391.pdf) at pdf p. 697)). But Respondents provide no evidence that the referenced "RF Output Duty Cycle" corresponds to the predetermined time for application

[22] As discussed above, *supra* at Section II.A.a, Respondents' arguments regarding inherency fail as a matter of law.

[redacted]

of the AC RF signal as required by the claims. Thus Respondents' invalidity contentions fail to provide evidence that Miratone system discloses "the predetermined time interval is from 0.05 to 0.8 seconds."

As another example, Miratone system does not disclose "[t]he mammalian body treatment apparatus of claim 1, wherein the plurality of electrodes is arranged into a plurality of rows and columns and neighboring electrodes in each of the plurality of rows columns have opposite polarities" ('444 Patent, claim 5), or "the plurality of electrodes forms a square configuration," ('444 Patent, claim 6), "[t]he mammalian body treatment apparatus of claim 1, wherein the plurality of electrodes forms a rectangular configuration and their respective polarities form a checkboard pattern" ('444 Patent, claim 7). Indeed, Respondents do not cite to any evidence for these limitations. *See, e.g.*, Respondents' July 10, 2023 Invalidity Contentions, Exs. C9 at *passim*. Nor could they, as the electrode configurations from the Miratone system (disclosed below) do not fall into any of these configurations:

[redacted]

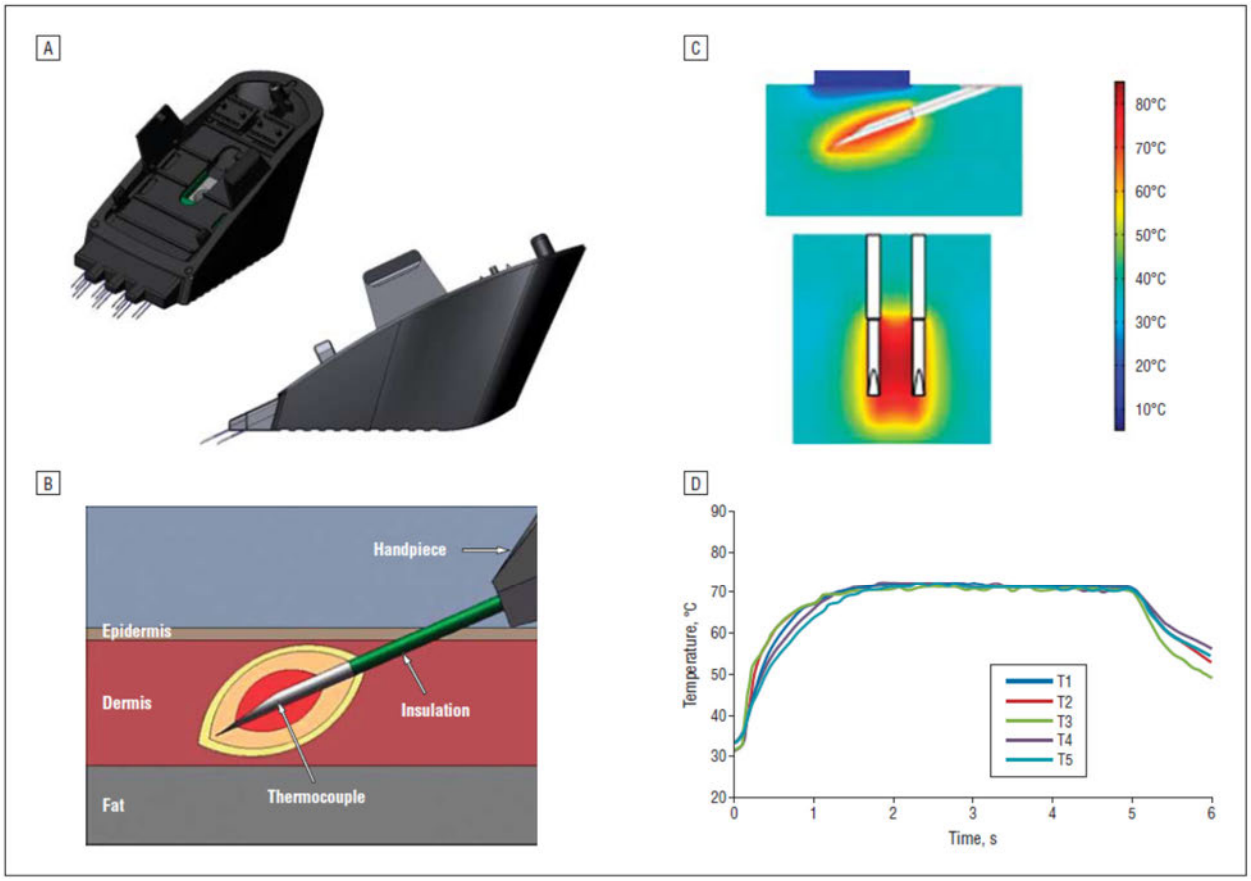

Alexiades *et al*., FIG 1.

Thus Respondents' invalidity contentions fail to provide evidence that Miratone system discloses electrodes with the above-mentioned configurations.

As another example, Miratone system does not disclose "[t]he skin treatment apparatus of claim 1, wherein the plurality of electrodes are non-insulated" ('836 Patent, claim 12), "[t]he mammalian body treatment apparatus of claim 1, wherein the plurality of electrodes are non-insulated" ('379 Patent, claim 8), "[t]he mammalian body treatment apparatus of claim 1, wherein the plurality of electrodes are non-insulated" ('444 Patent, claim 8). Indeed, Respondents do not cite to any evidence that the Miratone system discloses non-insulated electrodes. *See, e.g.,* Respondents' July 10, 2023 Invalidity Contentions, Ex. A9 at 24. Nor could they, as the Miratone system references Respondents rely upon discusses "[i]nsulating the proximal 3mm of each electrode with the

[redacted]

biocompatible material while leaving the distal 3mm exposed." *See, e.g.,* Hantash 2009 at 88. Thus Respondents' invalidity contentions fail to provide evidence that Miratone system discloses electrodes which are non-insulated.

As another example, Miratone system does not disclose "[t]he skin treatment apparatus of claim 1, wherein the electrodes are needles and have a diameter from 0.25 mm to 0.30 mm," as required by claim 9 of the '836 Patent. Specifically, for these limitations, Respondents cite to disclosure that "Patients were treated with an investigational 35 W bipolar RF device . . . configured with five pairs of 30 gauge electrodes." *See, e.g.,* Respondents' July 10, 2023 Invalidity Contentions, Ex. A9 at 22 (citing Hantash 2009 at 88). But "30 gauge electrodes" corresponds to electrodes with a diameter of 0.312 mm,[23] and thus Respondents' invalidity contentions fail to provide evidence that Miratone system discloses needles with a diameter from 0.25 mm to 0.30 mm.

As another example, Miratone system does not disclose "[t]he method of treating skin of claim 14, wherein the RF is about 2.0 MHz and the coagulated area around each electrode is oval shaped," as required by claim 19 of the '836 Patent, or "[t]he method of treating a mammalian body of claim 10, wherein the RF is about 2.0 MHz and the section of the body segment around each electrodes where energy is applied is oval shaped," as required by claim 15 of the '379 Patent. Indeed, Respondents' invalidity contentions do not cite ***any*** evidence that Miratone system discloses RF "about 2.0 Mhz." Respondents' invalidity contentions fail to provide evidence that Miratone system discloses RF about 2.0 MHz.

As another example, Miratone system does not disclose "[t]he method of treating skin of claim 14, wherein the RF is from 0.5 to 10 Mhz and the predetermined time interval is from 0.05

---

[23] *See, e.g.*, https://www.hamiltoncompany.com/laboratory-products/needles-knowledge/needle-gauge-chart.

to 0.8 seconds," as required by claim 22 of the '836 Patent. As discussed above, claim 14 requires "applying a Alternating Current (AC) Radio Frequency (RF) signal to the plurality of electrodes" which are "configured to cause coagulation around each electrode rather than coagulating between the electrodes," limitations which Miratone system fails to disclose. And once again, Respondents have failed to identify any disclosure Miratone system showing a predetermined time interval from 0.05 to 0.8 seconds. Finally, Respondents fail to cite to any disclosure related to the Miratone system that the system "wherein the RF is from 0.5 to 10 Mhz." Indeed, the disclosure Respondents cite indicates the system utilizes an "RF frequency output of 460 kHz +/- 5 kHz." Respondents' July 10, 2023 Invalidity Contentions, Ex. A9 at 46(citing Miratone User Manual at 35 (Ilooda-0004850 (Primaeva Miratone K082391.pdf) at pdf p. 697)).

Respondents attempt to gap-fill these glaring deficiencies in Miratone system through a broad brush statement for each limitation that "[t]o the extent this limitation is not explicitly or inherently disclosed by this reference, or rendered obvious by the references disclosed herein, it would have further been obvious given the knowledge of a person of ordinary skill in the art and/or other references disclosed and/or charted in Respondents' Invalidity Contentions." Respondents' July 10, 2023 Invalidity Contentions, Exs. A9, B9, and C9 at *passim*. But Respondents' catch-all qualifications are inadequate to establish that any of the Asserted Claims are invalid. First, it is improper to rely on a person of skill's knowledge "as a wholesale substitute for reasoned analysis and evidentiary support, especially when dealing with a limitation missing from the prior art references specified." *Arendi S.A.R.L.*, 832 F.3d at 1362. Miratone system's deficiencies go to critical elements of the Asserted Claims that cannot be papered over with conclusory allegations about a POSITA's background knowledge. Second, as explained in the sections discussing Respondents' other invalidity charts, the other references Respondents try to combine with Miratone system each themselves lack various limitations of the Asserted Claims. And Respondents have not cited

a single reference that discloses providing or applying an Alternating Current (AC) Radio Frequency (RF) signal to the plurality of electrodes configured to cause coagulation around each electrode rather than coagulating between the electrode. Finally, once again, Respondents have failed to present evidence that Miratone system qualifies as system prior art.

Thus, Respondents have not established a *prima facie* case of anticipation or obviousness.

k. Exhibits A10, B10, and C10 ("ScarLet")

In Exhibits A10, B10, and C10, Respondents argue that:

> The ScarLet product manufactured by ViOL, Korea ("ScarLet") qualifies as prior art under at least AIA 35 U.S.C. § 102(a)(1) because it is a product that was in public used, on sale, or otherwise available to the public before the effective filing date of the claimed invention to which the ['836, '379, and '444 Patents] could claim priority.

Respondents' July 10, 2023 Invalidity Contentions, Exs. A10, B10, and C10. Respondents then contend that:

> The asserted claims of the ['836, '379, and '444 Patents] are invalid under AIA 35 U.S.C. § 102(a)(1) as anticipated by ScarLet, and/or are invalid under AIA 35 U.S.C. § 103 as obvious in view of ScarLet alone, or in combination with one or more other references identified herein and/or in Respondents' Invalidity Contentions, at least based on Respondents' understanding of Complainant's application of the asserted claims in an effort to show infringement.

Id.

As an initial matter, Respondents are wrong that the ScarLet system qualifies as prior art. As discussed above, the '836, '379, and '444 Patents are entitled to a priority date before March 16, 2013, meaning pre-AIA framework applies when assessing whether a reference or system is prior art. Specifically, the '836 patent claims priority to U.S. application no. 14/006,930, filed on June 14, 2012, and Korean application nos. 10-2011-0057691 and 10-2011-0057692, both filed on June 14, 2011. The Asserted Claims are entitled to an effective U.S. filing date of June 14, 2012, and an effective foreign filing date of June 14, 2011.

[redacted]

Under pre-AIA 35 U.S.C. 102, a prior art system has to be "known or used by others in this country … before the invention thereof by the applicant for patent" (pre-AIA 102(a)), or "… in public use or on sale in this country, more than one year prior to the date of the application for patent in the United States" (pre-AIA 102(b)). Respondents have expressly chosen to rely on the ScarLet system itself, rather than published information about this system that might qualify as prior art on other bases, and thus must establish that the system itself meets the requirements to constitute prior art under U.S. law. However, Respondents have not shown that the ScarLet system was "known or used by others in this country" prior to either the U.S. filing date of June 14, 2012, or the effective foreign filing date of June 14, 2011. Nor have Respondents shown that the ScarLet system was "in public use or on sale in this country" prior to June 14, 2011 (one year prior to the June 14, 2012 date of the application for patent in the United States). Indeed, all of the disclosure Respondents cite in their invalidity contentions related to the ScarLet system either: 1) provides no indication as to when and where the system was used or sold; 2) relates to a device released years after the relevant priority date; or 3) relates to purported use of the ScarLet system in ***Korea***, not the United States.[24] In fact, Respondents' invalidity contentions do not even contend that the ScarLet system qualifies as prior art under pre-AIA 35 U.S.C. 102, and instead rely entirely on

---

[24] *See* Respondents' July 10, 2023 Invalidity Contentions, Exs. A10, B10, and C10 (citing Ilooda-0005923 (Shim 2010_DKU Thesis 2010.12.01), Ilooda-0006075 (Scarlet intro), Ilooda-0006078 (#13_(Eng)_Shim 2010_DKU Thesis Dec 1 2010_Translated_Certified), Ilooda-0006210 (5-1. 스칼렛 최초허가), Ilooda-0006533 (Naver Blog The H Jan 10 2011), Ilooda-0006719 (#19-1_Naver Blog The H Jan 10, 2011_Translated_Certified), Ilooda-0006770 (#18_D&PS Monthly Sept 2010_Translated_Certified), Ilooda-0006827 (D&PS Monthly September 2010), Ilooda-0008178, Ilooda-0009318, Ilooda-0009319, Ilooda-0009322, Ilooda-0009339, Ilooda-0009669, Ilooda-0009673, Ilooda-0009678, Ilooda-0009791, Ilooda-0009795, Ilooda-0010031, Ilooda-0010042, SERENDIA-00017276, SERENDIA-00017306, SERENDIA-00031579, SERENDIA-00033637, SERENDIA-00033705, SERENDIA-00036286, SERENDIA-00052450, SERENDIA-00061017, SERENDIA-00066746, SERENDIA-00075908, and SERENDIA-00081664.

Respondents' erroneous contention that the '836, '379, and '444 Patents should be evaluated under the post-AIA framework. For this reason alone, Respondents have failed to present a *prima facie* case of anticipation and/or obviousness in view of the ScarLet system.

Respondents have not shown that any ScarLet system was in public use practicing the asserted method claims or that such a system in public use or on sale, or otherwise available to the public, was configured to practice the asserted system claims. Regardless, even if the ScarLet system did qualify as prior art to the '836, '379, and '444 Patents (and it does not), the ScarLet system does not anticipate or render obvious (either alone or in combination) the Asserted Claims of the '836, '379, and '444 Patents.

For example, the Respondents' cited materials do not disclose providing or applying an Alternating Current (AC) Radio Frequency (RF) signal to the plurality of electrodes. *See* '836 Patent, claim 1 ("the RF generation module electrically coupled to the plurality of electrodes and configured to provide an Alternating Current (AC) RF signal to the plurality of electrodes"); '836 Patent, claim 14 ("applying a Alternating Current (AC) Radio Frequency (RF) signal to the plurality of electrodes"); '379 Patent, claim 1, and '444 Patent, claim 1 ("the RF generation module electrically coupled to the plurality of electrodes and configured to provide an RF signal with oscillating current to the plurality of electrodes"); '379 Patent, claim 10, and '444 Patent, claim 10 ("applying an RF signal with oscillating current to the plurality of electrodes").

Serendia notes that, as of the date of this response, the parties disagree over the appropriate construct of the terms "[a/an] Alternating Current (AC) [RF/Radio Frequency (RF)] signal" and "an RF signal with oscillating current." Under Serendia's (and Staff's) proposed construction, these terms carry their plain and ordinary meaning, which is "an electrical signal with oscillating current (current alternating polarities), and having a radio frequency (measured in MHz)." Under

Respondents' proposed construction, "a signal combining an AC frequency rate and an RF frequency rate." Notably, Respondents fail to identify how ScarLet system discloses providing or applying an Alternating (or oscillating) Current (AC) Radio Frequency (RF) signal to the plurality of electrodes, under either construction.

Specifically, for these limitations, Respondents cite to disclosure from a 2010 article purportedly relating to the ScarLet system, which states that "[t]he power supply part supplies 220V power input from the outside and DC 24V to the control part, oscillation part, and output part." *See, e.g.,* Respondents' July 10, 2023 Invalidity Contentions, Ex. A10 (citing Ilooda-0006078 (#13_(Eng)_Shim 2010_DKU Thesis Dec 1 2010_Translated_Certified at 6)). However, the disclosure Respondents cite does not indicate that the RF energy applied is alternating (or oscillating) current, i.e., *with the current alternating polarities*. And as discussed previously, RF energy may also be applied as non-AC "voltage pulses" made at a rate within the radio frequency range, rather than via alternating current. *See* Underwood at 6:42-52 ("the voltage is usually delivered in a series of ***voltage pulses or alternating current*** of time varying voltage amplitude with a sufficiently high frequency (e.g., on the order of 5 kHz to 20 MHz)").[25] Thus Respondents' invalidity contentions fail to provide evidence that the ScarLet system discloses providing or applying an Alternating Current (AC) Radio Frequency (RF) signal to the plurality of electrodes.[26]

---

[25] Indeed, Respondents Lutronic, SHEnB, Rohrer, Ilooda, Cutera, Jeisys, Cynosure, and EndyMed all assert that their "RF" microneedle accused products do not satisfy the alternating (or oscillating current) radio frequency limitations of the Asserted Claims, directly contradicting the assertions in Respondents' invalidity contentions. *See, e.g.*, June 14, 2023 Interrogatory Responses.

[26] Additionally, while one of the references Respondents cite related to the ScarLet system discusses the use of "bipolar" electrodes. *See* Respondents' July 10, 2023 Invalidity Contentions, Ex. A10 at 9 ("a bipolar unit was used), Respondents have not established that the ScarLet system discloses the "bipolar electrodes" required by the Asserted Claims. For example, the parties agree that the terms "electrodes being bipolar" / "electrodes are bipolar" carry their plain and ordinary meaning, which is electrodes change or alternate between being positive or negative as the current alternates between them (as opposed to a monopolar configuration where current flows from one

[redacted]

As another example, Respondents' cited materials do not disclose a system or method "configured to cause coagulation around each electrode rather than coagulating between the electrodes" ('836 Patent, claims 1, 14), "apply[ing] energy to body segments around each electrode rather than to body segments between the electrodes" ('379 Patent, claims 1, 10); or "caus[ing] energy to be substantially applied to body segments around each electrode" ('444 Patent, claims, 1, 10) in combination with the other claim limitations. Specifically, for these limitations, Respondents cite to disclosure from an internal VIOL presentation purporting to show the capabilities of a prototype ScarLet device, but this is not evidence of a device that would qualify as prior art. *See, e.g.,* Respondents' July 10, 2023 Invalidity Contentions, Ex. A10 at 17-21 (citing SERENDIA-00017306 at 320, 321, 324, and 337)). Further, the images shown on bates page SERENDIA-00017320 only show a single electrode, rather than electrodes, and therefore cannot show what occurred between electrodes:

---

or more electrodes that deliver current to one or more ground electrodes). See July 21, 2023 Post-Markman JCCC. But Respondents fail to explain how the ScarLet system discloses bipolar electrodes under this agreed construction. Serendia also understands that Staff and Respondents contend that there is disclaimer regarding certain electrode configurations in the prosecution history of the patents. While Serendia disagrees with these disclaimer arguments, to the extent these arguments succeed, these purportedly disclaimed configurations would not invalidate the claims.

[redacted]

Scarlet RF Intensity / pulse	Thermal zone on skin	Advantages and Disadvantages
High intensity Short pulse		-Advantages: Increase effects on Scar treatment as like laser fractional therapy -Disadvantages: pain and discomforts • Effective on strong RF energy on small area. • Effective on Anchoring Point therapy.
Low intensity Short pulse		-Advantages: Skin rejuvenation on collagen remodeling effect. -Disadvantages: Difficult to make RF end-point due to needling effect. • Effective Mid-therapeutic range on wide area • Appropriate on thin skin rejuvenating treatment
High intensity Long pulse		- Advantages: wide and deep Scar treatment - Disadvantages: burn risk • Strong RF effect on wide area • Recommended for the thick skin

In addition, Respondents have not established whether the images relate to use of a bipolar or monopolar configuration. Thus Respondents' invalidity contentions fail to provide evidence that the ScarLet system discloses these limitations.

As another example, Respondents' cited materials do not disclose "the closest neighboring electrodes have opposite polarities" ('836 Patent, claim 5; '379 Patent, claim 5), "the nearest electrodes having opposite polarities" ('444 Patent, claims 1, 10), "[t]he mammalian body treatment apparatus of claim 1, wherein the plurality of electrodes is arranged into a plurality of rows and columns and neighboring electrodes in each of the plurality of rows columns have opposite polarities" ('444 Patent, claim 5), or "[t]he mammalian body treatment apparatus of claim 1, wherein the plurality of electrodes forms a rectangular configuration and their respective polarities form a checkboard pattern" ('444 Patent, claim 6). For each of these limitations, Respondents merely point to disclosure that the ScarLet system may have monopolar and bipolar modes. *See, e.g.*, Respondents' July 10, 2023 Invalidity Contentions, Ex. A10 at 36-39; Ex. C10 at 4-10. But none

[redacted]

of these citations provide any indication regarding the requisite physical layout of the electrodes, including the location of any specific electrodes with respect to any other electrodes of opposite polarity. Thus Respondents' invalidity contentions fail to provide evidence that the ScarLet system discloses electrodes with the requisite electrode configurations of the claims.

As another example, Respondents' cited materials do not disclose "[t]he skin treatment apparatus of claim 4, wherein a section of each electrode of the plurality of electrodes is non-insulated" ('836 Patent, claim 6), "[t]he skin treatment apparatus of claim 1, wherein the plurality of electrodes are non-insulated" ('836 Patent, claim 12), "[t]he mammalian body treatment apparatus of claim 1, wherein the plurality of electrodes are non-insulated" ('379 Patent, claim 8), "[t]he mammalian body treatment apparatus of claim 1, wherein the plurality of electrodes are non-insulated" ('444 Patent, claim 8), "[t]he skin treatment apparatus of claim 1, wherein each electrode of the plurality of electrodes is insulated except at its tip" ('836 Patent, claim 13), or "[t]he mammalian body treatment apparatus of claim 1, wherein each electrode of the plurality of electrodes is insulated except at its tip" ('379 Patent, claim 9; '444 Patent, claim 9). Indeed, Respondents' invalidity contentions cite to only the below figure for these limitations:

[redacted]

Scarlet RF energy control (Depth)

SCARLET

Scarlet RF Intensity / pulse	Thermal zone on skin	Advantages and Disadvantages
High intensity Short pulse		-Advantages: Increase effects on Scar treatment as like laser fractional therapy -Disadvantages: pain and discomforts • Effective on strong RF energy on small area. • Effective on Anchoring Point therapy.
Low intensity Short pulse		-Advantages: Skin rejuvenation on collagen remodeling effect. -Disadvantages: Difficult to make RF end-point due to needling effect. • Effective Mid-therapeutic range on wide area • Appropriate on thin skin rejuvenating treatment
High intensity Long pulse		- Advantages: wide and deep Scar treatment - Disadvantages: burn risk • Strong RF effect on wide area • Recommended for the thick skin

VIOL

15

See, e.g., Respondents' July 10, 2023 Invalidity Contentions, Ex. A10 at 41 (citing SERENDIA-00017306 at 320). But as discussed above, this disclosure relates to an internal VIOL presentation purporting to show the capabilities of a prototype ScarLet device, which is not evidence of a device that would qualify as prior art. Moreover, Respondents have not shown that the cited disclosure identifies any needles as non-insulated, as nothing on the cited slide discusses the insulation of the electrodes. Thus Respondents' invalidity contentions fail to provide evidence that the ScarLet system discloses electrodes which are non-insulated, or insulated except at its tip.

As another example, Respondents' cited materials do not disclose "[t]he method of treating skin of claim 14, wherein the RF is from 0.5 to 10 Mhz and the predetermined time interval is from 0.05 to 0.8 seconds," as required by claim 22 of the '836 Patent. As discussed above, claim 14 requires "applying a Alternating Current (AC) Radio Frequency (RF) signal to the plurality of

electrodes" which are "configured to cause coagulation around each electrode rather than coagulating between the electrodes," limitations which ScarLet system fails to disclose.

Respondents attempt to gap-fill these glaring deficiencies in ScarLet system through a broad brush statement for each limitation that "[t]o the extent this limitation is not explicitly or inherently disclosed by this reference, or rendered obvious by the references disclosed herein, it would have further been obvious given the knowledge of a person of ordinary skill in the art and/or other references disclosed and/or charted in Respondents' Invalidity Contentions." *See, e.g.,* Respondents' July 10, 2023 Invalidity Contentions, Exs. A10, B10, and C10 at *passim*. But Respondents' catch-all qualifications are inadequate to establish that any of the Asserted Claims are invalid. First, it is improper to rely on a person of skill's knowledge "as a wholesale substitute for reasoned analysis and evidentiary support, especially when dealing with a limitation missing from the prior art references specified." *Arendi S.A.R.L.*, 832 F.3d at 1362. ScarLet system's deficiencies go to critical elements of the Asserted Claims that cannot be papered over with conclusory allegations about a POSITA's background knowledge. Second, as explained in the sections discussing Respondents' other invalidity charts, the other references Respondents try to combine with ScarLet system each themselves lack various limitations of the Asserted Claims. And Respondents have not cited a single reference that discloses providing or applying an Alternating Current (AC) Radio Frequency (RF) signal to the plurality of electrodes configured to cause coagulation around each electrode rather than coagulating between the electrodes. Finally, once again, Respondents have failed to present evidence that the ScarLet system qualifies as system prior art.

Thus, Respondents have not established a *prima facie* case of anticipation or obviousness.

l. Exhibits A11, B11, and C11 ("Mulholland")

In Exhibits A11, B11, and C11, Respondents argue that "United States Patent No. 10,799,285 ('Mulholland') qualifies as prior art under at least AIA 35 U.S.C. § 102(a)(2) because

its patent application was filed before the alleged effective filing date of the ['836, '379, and '444 Patents] and named another inventor." *See* Respondents' July 10, 2023 Invalidity Contentions, Exs. A11, B11, and C11. Respondents further assert that:

> To the extent that the ['836, '379, and '444 Patent] is subject to pre-AIA law, Mulholland qualifies as prior art under at least 35 U.S.C. § 102(e) (pre-AIA) because its patent application was filed before the alleged effective filing date of the ['836, '379, and '444 Patent] and named another inventor. Mulholland issued as the '285 patent on October 13, 2020.

Id.

Respondents then contend that:

> The asserted claims of the ['836, '379, and '444 Patents] are invalid under 35 U.S.C. § 102 (AIA or pre-AIA) as anticipated by Mulholland, and/or are invalid under 35 U.S.C. § 103 (AIA or pre-AIA) as obvious in view of Mulholland alone, or in combination with one or more other references identified herein and/or in Respondents' Invalidity Contentions, at least based on Respondents' understanding of Complainant's application of the asserted claims in an effort to show infringement.

Id.

Respondents are wrong. First, U.S. Pat. No. 7,618,429, which shares similarities with Mulholland, was considered during prosecution of the '444 Patent, and as the Federal Circuit has recognized, "it may be harder to meet the clear and convincing burden when the invalidity contention is based upon the same argument on the same reference that the PTO already considered." *Sciele Pharma Inc.*, 684 F.3d at 1260.

Second, the Mulholland was already considered by the PTAB during the IPRs of the Asserted Patents, with the PTAB finding that Mulholland did not contain adequate disclosure to even institute an IPR. *See, e.g.,* IPR2022-00594 ('836 Patent) at 26 ("Petitioner has not established a reasonable likelihood that independent claims 1 and 14 are unpatentable over Mehta in view of Mulholland."); IPR2022-00593 ('389 Patent) at 25 ("…we find that Petitioner has not shown a reasonable likelihood that the combination of Mehta and Mulholland would have rendered claim

1 or 10 obvious."). Serendia incorporates by reference its explanations why Mehta does not render the claims unpatentable in its POPRs and the reasons set forth by the PTAB in its IDs.

Regardless, even if Mulholland was not already considered and rejected during the prosecution of the Asserted Patents *and* during the respective IPRs, as discussed below, Mulholland does not anticipate or render obvious (either alone or in combination) the Asserted Claims of the '836, '379, and '444 Patents.

For example, the Mulholland does not disclose bipolar electrodes, as required by the Asserted Claims. *See* '836 Patent, claims 1, 14; '379 Patent, claims 1, 10 (requiring "a plurality of electrodes, the electrodes being bipolar"); '444 Patent, claim 4 ("wherein the electrodes are bipolar"). The parties agree that the terms "electrodes being bipolar" / "electrodes are bipolar" carry their plain and ordinary meaning, which is electrodes change or alternate between being positive or negative as the current alternates between them (as opposed to a monopolar configuration where current flows from one or more electrodes that deliver current to one or more ground electrodes). *See* July 21, 2023 Post-Markman JCCC. But Respondents identify no disclosure of electrodes meeting the agreed-upon construction. Instead, Respondents merely cite to large block quotes from Mulholland, without explaining how the portions cited disclose this limitation. *See, e.g.,* Respondents' July 10, 2023 Invalidity Contentions, Exs. A11, B11, C11 at *passim*. And while some of the cited disclosure discusses the application of RF energy during treatment, as discussed throughout these contentions, this does not necessarily correlate to the use of bipolar electrodes under the construction agreed to by the parties. Thus Respondents' invalidity contentions fail to provide any evidence that Mulholland discloses bipolar electrodes.[27]

---

[27] Serendia understands that Staff and Respondents contend that there is disclaimer regarding certain electrode configurations in the prosecution history of the patents. While Serendia disagrees

[redacted]

As another example, Mulholland does not disclose a system or method "configured to cause coagulation around each electrode rather than coagulating between the electrodes" ('836 Patent, claims 1, 14), "apply[ing] energy to body segments around each electrode rather than to body segments between the electrodes" ('379 Patent, claims 1, 10); or "caus[ing] energy to be substantially applied to body segments around each electrode" ('444 Patent, claims, 1, 10). Specifically, for these limitations, Respondents cite disclosure from Mulholland "describes a system having a plurality of pins and electrical current delivering through these pins in the skin causing coagulation of skin around the pins." Respondents' July 10, 2023 Invalidity Contentions, Ex. A11 at 10-11 (citing Mulholland at 1:61-64)). Respondents further cite to other disclosure in Mulholland which discusses "[h]eating temperature and reciprocation speed are adjusted to create coagulation of tissue around the needle." *Id*. (citing Mulholland at 8:7-10). But none of the disclosure Respondents cite indicates the extent to which energy or coagulation extends between electrodes, as required by the Asserted Claims. Thus Respondents' invalidity contentions fail to provide evidence that Mulholland discloses a system or method "configured to cause coagulation around each electrode rather than coagulating between the electrodes" (or the similar limitations regarding the application of energy around each electrode, rather than between them).

As another example, Mulholland does not disclose "the predetermined time interval" which is "from 0.05 to 0.8 seconds," as required by claims 2, 4, 16, 17, and 22 of the '836 Patent. Indeed, Respondents invalidity contentions merely cite to a block quote from Mulholland discussing the "dwelling time" of the RF energy. *See, e.g*., Respondents' July 10, 2023 Invalidity Contentions, Ex. A11 at 16-17 (citing Mulholland at 4:20-33) ("For example at a reciprocating rate of 100 Hz,

---

with these disclaimer arguments, to the extent these arguments succeed, these purportedly disclaimed configurations would not invalidate the claims.

the dwelling time is 10 ms and for 40 Hz the dwelling time is 25 ms."). But none of the cited disclosure discloses a predetermined time interval for treatment, let alone one which is "from 0.05 to 0.8 seconds," as required by the claims. Thus, Respondents' invalidity contentions fail to provide evidence that Mulholland discloses "the predetermined time interval is from 0.05 to 0.8 seconds."

As another example, Mulholland does not disclose "the closest neighboring electrodes have opposite polarities" ('836 Patent, claim 5; '379 Patent, claim 5), "the nearest electrodes having opposite polarities" ('444 Patent, claims 1, 10), "[t]he mammalian body treatment apparatus of claim 1, wherein the plurality of electrodes is arranged into a plurality of rows and columns and neighboring electrodes in each of the plurality of rows columns have opposite polarities" ('444 Patent, claim 5), "the plurality of electrodes forms a square configuration," ('444 Patent, claim 6),or "[t]he mammalian body treatment apparatus of claim 1, wherein the plurality of electrodes forms a rectangular configuration and their respective polarities form a checkboard pattern." ('444 Patent, claim 7). Indeed, Respondents identify no disclosure from Mulholland for the neighboring electrodes having opposite polarities. *See, e.g.*, Respondents' July 10, 2023 Invalidity Contentions, Ex. A11 at 17. And while Respondents cite to Figure 2B of Mulholland as purportedly disclosing a "square configuration" and a "rectangular configuration and their respective polarities form a checkboard pattern" (*see, e.g.*, Respondents' July 10, 2023 Invalidity Contentions, Ex. C11 at 13-17), Figure 2B discloses neither of these configurations:

[redacted]

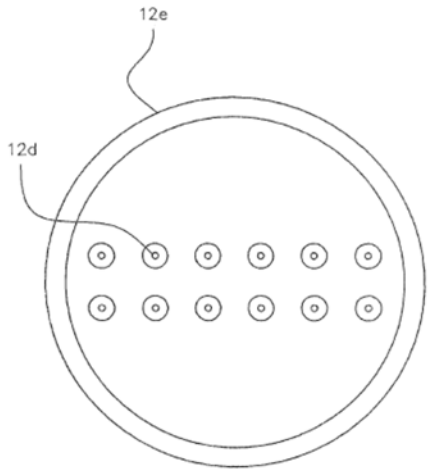

Thus Respondents' invalidity contentions fail to provide evidence that Mulholland discloses these electrode configuration limitations.

As another example, Mulholland does not disclose "[t]he skin treatment apparatus of claim 4, wherein a section of each electrode of the plurality of electrodes is non-insulated" ('836 Patent, claim 6), "[t]he skin treatment apparatus of claim 1, wherein the plurality of electrodes are non-insulated" ('836 Patent, claim 12), "[t]he mammalian body treatment apparatus of claim 1, wherein the plurality of electrodes are non-insulated" ('379 Patent, claim 8), "[t]he mammalian body treatment apparatus of claim 1, wherein the plurality of electrodes are non-insulated" ('444 Patent, claim 8), "[t]he skin treatment apparatus of claim 1, wherein each electrode of the plurality of electrodes is insulated except at its tip" ('836 Patent, claim 13), or "[t]he mammalian body treatment apparatus of claim 1, wherein each electrode of the plurality of electrodes is insulated except at its tip" ('379 Patent, claim 9; '444 Patent, claim 9). Indeed, Respondents' invalidity contentions do not cite any evidence that Mulholland discloses this limitation. *See, e.g.*, Respondents' July 10, 2023 Invalidity Contentions, Ex. A11 at 18-19. Thus Respondents' invalidity contentions fail to provide evidence that Mulholland discloses electrodes which are non-insulated, or insulated except at its tip.

[redacted]

As another example, the Mulholland does not disclose "the closest neighboring electrodes are separated by a distance of 1.3 mm to 3.0 mm," as required by claim 11 of the '836 Patent and claim 7 of the '379 Patent. Indeed, Respondents' invalidity contentions do not cite any evidence that Mulholland discloses this limitation. *See, e.g.*, Respondents' July 10, 2023 Invalidity Contentions, Ex. A11 at 18. Thus Respondents' invalidity contentions fail to provide evidence that Mulholland discloses the closest neighboring electrodes are separated by a distance of 1.3 mm to 3.0 mm.

As another example, Mulholland does not disclose "[t]he method of treating skin of claim 14, wherein the RF is about 2.0 MHz and the coagulated area around each electrode is oval shaped," as required by claim 19 of the '836 Patent, or "[t]he method of treating a mammalian body of claim 10, wherein the RF is about 2.0 MHz and the section of the body segment around each electrodes where energy is applied is oval shaped," as required by claim 15 of the '379 Patent. Specifically, Respondents cite to no disclosure regarding the shape of any zone of coagulation. *See, e.g.,* Respondents' July 10, 2023 Invalidity Contentions, Ex. A11 at *passim*. Thus Respondents' invalidity contentions fail to provide evidence that Mulholland discloses these limitations.

As another example, Mulholland does not disclose "[t]he method of treating skin of claim 14, wherein the RF is from 0.5 to 10 Mhz and the predetermined time interval is from 0.05 to 0.8 seconds," as required by claim 22 of the '836 Patent. As discussed above, claim 14 requires electrodes "configured to cause coagulation around each electrode rather than coagulating between the electrodes," a limitation which Mulholland fails to disclose. And once again, Respondents have failed to identify any disclosure Mulholland showing a predetermined time interval from 0.05 to 0.8 seconds.

Respondents attempt to gap-fill these glaring deficiencies in Mulholland through a broad brush statement for each limitation that "[t]o the extent this limitation is not explicitly or inherently disclosed by this reference, or rendered obvious by the references disclosed herein, it would have further been obvious given the knowledge of a person of ordinary skill in the art and/or other references disclosed and/or charted in Respondents' Invalidity Contentions." *See, e.g.,* Respondents' July 10, 2023 Invalidity Contentions, Exs. A11, B11, and C11 at *passim*. But Respondents' catch-all qualifications are inadequate to establish that any of the Asserted Claims are invalid. First, it is improper to rely on a person of skill's knowledge "as a wholesale substitute for reasoned analysis and evidentiary support, especially when dealing with a limitation missing from the prior art references specified." *Arendi S.A.R.L.*, 832 F.3d at 1362. Mulholland's deficiencies go to critical elements of the Asserted Claims that cannot be papered over with conclusory allegations about a POSITA's background knowledge. Second, as explained in the sections discussing Respondents' other invalidity charts, the other references Respondents try to combine with Mulholland each themselves lack various limitations of the Asserted Claims. And Respondents have not cited a single reference that discloses providing or applying an Alternating Current (AC) Radio Frequency (RF) signal to the plurality of electrodes configured to cause coagulation around each electrode rather than coagulating between the electrodes.

Thus, Respondents have not established a *prima facie* case of anticipation or obviousness.

m. Exhibits A12, B12, and C12 ("Manstein")

In Exhibits A12, B12, and C12, Respondents argue that "U.S. Patent No. 7,824,394 to Manstein ('Manstein'), qualifies as prior art under at least AIA 35 U.S.C. § 102(a)(1) because it is a patent that published before the filing of the earliest application to which the ['836, '379, and '444 Patents] could claim priority." *See* Respondents' July 10, 2023 Invalidity Contentions, Exs. A12, B12, and C12. Respondents further assert that:

[redacted]

> To the extent that the [’836, ’379, or ’444 Patent] is subject to pre-AIA law, Manstein qualifies as prior art under at least 35 U.S.C. § 102(b) (pre-AIA) because it is a patent that published more than one year before the filing of the earliest application to which the ‘[’836, ’379, or ’444 Patent] could claim priority. Manstein also qualifies as prior art under at least 35 U.S.C. § 102(a) (pre-AIA) because it is a patent that was published prior to the alleged invention of the [’836, ’379, or ’444 Patent].

Id.

Respondents then contend that:

> The asserted claims of the [’836, ’379, and ’444 Patents] are invalid under 35 U.S.C. § 102 (AIA or pre-AIA) as anticipated by Manstein, and/or are invalid under 35 U.S.C. § 103 (AIA or pre-AIA) as obvious in view of Manstein alone, or in combination with one or more other references identified herein and/or in Respondents’ Invalidity Contentions, at least based on Respondents’ understanding of Complainant’s application of the asserted claims in an effort to show infringement.

Id.

Respondents are wrong. First, Mainstein was considered during prosecution of the ’836, ’379, and ’444 Patents, and as the Federal Circuit has recognized, “it may be harder to meet the clear and convincing burden when the invalidity contention is based upon the same argument on the same reference that the PTO already considered.” *Sciele Pharma Inc.*, 684 F.3d at 1260.

Second, as discussed below, even if Manstein were had not already been considered by the PTO, Manstein does not anticipate or render obvious (either alone or in combination) the Asserted Claims of the ’836, ’379, and ’444 Patents.

For example, Manstein does not disclose bipolar electrodes, as required by the Asserted Claims. *See* ’836 Patent, claims 1, 14; ’379 Patent, claims 1, 10 (requiring “a plurality of electrodes, the electrodes being bipolar”); ’444 Patent, claim 4 (“wherein the electrodes are bipolar”). The parties agree that the terms “electrodes being bipolar” / “electrodes are bipolar” carry their plain and ordinary meaning, which is electrodes change or alternate between being positive or negative as the current alternates between them (as opposed to a monopolar configuration where

current flows from one or more electrodes that deliver current to one or more ground electrodes). *See* July 21, 2023 Post-Markman JCCC. But Respondents fail to explain how Manstein discloses bipolar electrodes under this agreed construction.

Specifically, for these limitations Respondents cite to Manstein Figure 4 and related disclosure that:

> Needles 410 and 415 are shown operating in bipolar mode in another embodiment of the present invention. Needle 410 is a positive electrode delivering RF or other current to the tip region of the needle from the energy source via conductor 430. Needle 415 functions as a grounding electrode that is connected to the ground of the energy source via conductor 431. In this configuration the applied current will travel through the tissue between the tips of the needles 410 and 415 generating an elongated region of thermal damage 425 around and between the tips of the two needles.

See, e.g., Respondents' July 10, 2023 Invalidity Contentions, Ex. A12 at 2 (citing Manstein Figure 4; *id*. at 7:13-22). But Figure 4 does not show a *bipolar* electrode configuration, instead showing a positive electrode and a grounding electrode, i.e., a *monopolar* electrode configuration.[28] Thus Respondents' invalidity contentions fail to provide any evidence that Manstein discloses bipolar electrodes.

As another example, Manstein does not disclose providing or applying an Alternating Current (AC) Radio Frequency (RF) signal to the plurality of electrodes. *See* '836 Patent, claim 1 ("the RF generation module electrically coupled to the plurality of electrodes and configured to provide an Alternating Current (AC) RF signal to the plurality of electrodes"); '836 Patent, claim 14 ("applying a Alternating Current (AC) Radio Frequency (RF) signal to the plurality of electrodes"); '379 Patent, claim 1, and '444 Patent, claim 1 ("the RF generation module electrically

[28] Serendia understands that Staff and Respondents contend that there is disclaimer regarding certain electrode configurations in the prosecution history of the patents. While Serendia disagrees with these disclaimer arguments, to the extent these arguments succeed, these purportedly disclaimed configurations would not invalidate the claims.

coupled to the plurality of electrodes and configured to provide an RF signal with oscillating current to the plurality of electrodes"); '379 Patent, claim 10, and '444 Patent, claim 10 ("applying an RF signal with oscillating current to the plurality of electrodes").

Serendia notes that, as of the date of this response, the parties disagree over the appropriate construct of the terms "[a/an] Alternating Current (AC) [RF/Radio Frequency (RF)] signal" and "an RF signal with oscillating current." Under Serendia's (and Staff's) proposed construction, these terms carry their plain and ordinary meaning, which is "an electrical signal with oscillating current (current alternating polarities), and having a radio frequency (measured in MHz)." Under Respondents' proposed construction, "a signal combining an AC frequency rate and an RF frequency rate." Notably, Respondents fail to identify how Manstein discloses providing or applying an Alternating (or oscillating) Current (AC) Radio Frequency (RF) signal to the plurality of electrodes, under either construction.

Specifically, for these limitations, Respondents cite disclosure that "[i]n one exemplary embodiment, the energy source 320 is a radio frequency (RF) device capable of outputting signals having frequencies in a desired range" and that "energy source 320 receives these setting, and generates a current directed to and from specified needles for selectable or predetermined durations, intensities, and sequences based on these settings." Respondents' July 10, 2023 Invalidity Contentions, Ex. A12 at 3-4 (citing Manstein at 5:42-44 and 5:47-51). But the cited disclosure fails to disclose application of an *alternating (or oscillating)* current. As the applicant argued during prosecution of the '836 Patent, "the Manstein reference does not teach applying a high frequency Alternating Current signal to bipolar electrodes." *See* October 17, 2015 Response to Office Action ('836 Patent FH), at 9. As the applicant explained:

> It is the application of the combined Alternating current, high frequency signal to bipolar electrodes that enables the Applicants' apparatus or method to form non-

[redacted]

> intersecting coagulation about their bipolar electrodes similar to prior art Monopolar configurations. In particular, the application of an alternating current, high frequency signal between bipolar electrodes forms a complete circuit where during the initial conduction (before the current changes polarity and thus the electrodes change poles (from positive to negative and back)), any current density in the path between electrodes will be less than around each electrode.
>
> In Applicants' claimed apparatus and methods, conduction may begin initially between bipolar electrodes as electrons are released from one electrode to the tissue around the electrode and then travel to the other electrode. Concentration of the electron current may be highest in the area immediately surrounding each electrode causing areas around each electrode to be heated more. Electrons have more space to travel through in the path between the electrodes, becoming less dense (spaced apart from one another) Accordingly, the path between the electrodes may heat slower than the areas immediately surrounding the electrodes. Then the current will alternate, and the process start over again, preventing or limiting the heating between electrodes.

March 1, 2016 Response to Office Action at 11. Indeed, in the Notice of Allowance, the Examiner agreed that Manstein did not disclose an alternating (or oscillating) radio frequency signal applied to bipolar electrodes, noting that:

> The examiner agrees that with the applicant's argument that the AC signal and RF signal are applied in different embodiments in the prior art (e.g. see [0032] of Manstein) and that there would be no motivation to combine the embodiments. [0052] of the applicant's specification is where the applicant discloses the RF AC signal being implemented in one embodiment.

Notice of Allowance, at 2. Thus Respondents' invalidity contentions fail to provide evidence that Manstein discloses providing or applying an alternating (or oscillating) radio frequency signal to the plurality of electrodes.

As another example, Manstein does not disclose a system or method "configured to cause coagulation around each electrode rather than coagulating between the electrodes" ('836 Patent, claims 1, 14), "apply[ing] energy to body segments around each electrode rather than to body segments between the electrodes" ('379 Patent, claims 1, 10); or "caus[ing] energy to be substantially applied to body segments around each electrode" ('444 Patent, claims, 1, 10). Specifically, for these limitations, Respondents cite Manstein Figure 3 and disclosure that "[e]lectromagnetic

radiation is directed to portions of a target area within the skin . . . application of RF current to the needles 350 causes heating in the exposed tip region, inducing thermal damage regions 370 around the tip of each needle" and that in another embodiment "the applied current will travel through the tissue between the tips of the needles 410 and 415 generating an elongated region of thermal damage 425 around and between the tips of the two needles." Respondents' July 10, 2023 Invalidity Contentions, Ex. A12 at 4-5 (citing Manstein Figure 3; *id*. at 4:7-11, 6:23-26, and 7:13-7:26). But none of the citations Respondents identify energy or coagulation concentrated around each electrode *rather than between them*. Thus Respondents' invalidity contentions fail to provide evidence that Manstein discloses a system or method "configured to cause coagulation around each electrode rather than coagulating between the electrodes" (or the similar limitations regarding the application of energy around each electrode, rather than between them).

As another example, Manstein does not disclose "the predetermined time interval" which is "from 0.05 to 0.8 seconds," as required by claims 2, 4, 16, 17, and 22 of the '836 Patent. Indeed, Respondents' invalidity contentions do not cite any evidence that Manstein discloses this limitation. *See, e.g.*, Respondents' July 10, 2023 Invalidity Contentions, Ex. A12 at 8, 17. Thus Respondents' invalidity contentions fail to provide evidence that Manstein discloses "the predetermined time interval is from 0.05 to 0.8 seconds."

As another example, Manstein does not disclose "the closest neighboring electrodes have opposite polarities" ('836 Patent, claim 5; '379 Patent, claim 5), "the nearest electrodes having opposite polarities" ('444 Patent, claims 1, 10), "[t]he mammalian body treatment apparatus of claim 1, wherein the plurality of electrodes is arranged into a plurality of rows and columns and neighboring electrodes in each of the plurality of rows columns have opposite polarities" ('444 Patent, claim 5). Specifically, for these limitations, Respondents cite Manstein Figure 4 and

disclosure that "Needles 410 and 415 are shown operating in bipolar mode" and/or that "Needle 410 is a positive electrode delivering RF or other current . . . Needle 415 is a grounding electrode connected to the ground of the energy source." Respondents' July 10, 2023 Invalidity Contentions, Ex. A12 at 8-9 (citing Manstein Figure 4; *id*. at 7:13-22); Ex. B12 at 9 (citing Manstein Fig. 4; *id*. at 7:13-22); Ex. C12 at 10 (citing Manstein Fig. 4; *id*. at 7:13-7:14); Ex. C12 at 16 (citing Manstein Fig. 4; *id*. at 7:13-22). But the disclosure Respondents cite fails to show that the needles have opposite polarities. Indeed, as discussed above, Manstein utilizes a *monopolar* configuration for its electrodes (i.e., utilizing a positive electrode and a ground electrode). Thus Respondents' invalidity contentions fail to provide evidence that Manstein discloses these requisite electrode configuration limitations.

As another example, Manstein does not disclose "[t]he skin treatment apparatus of claim 1, wherein the plurality of electrodes are non-insulated" ('836 Patent, claim 12), "[t]he mammalian body treatment apparatus of claim 1, wherein the plurality of electrodes are non-insulated" ('379 Patent, claim 8), "[t]he mammalian body treatment apparatus of claim 1, wherein the plurality of electrodes are non-insulated" ('444 Patent, claim 8). Indeed, Respondents' invalidity contentions do not cite any evidence that Manstein discloses non-insulated electrodes. Thus Respondents' invalidity contentions fail to provide evidence that Manstein discloses electrodes which are non-insulated.

As another example, Manstein does not disclose "[t]he skin treatment apparatus of claim 1, wherein the electrodes are needles and have a diameter from 0.25 mm to 0.30 mm," as required by claim 9 of the '836 Patent. Specifically, for these limitations, Respondents cite disclosure that "[i]n practicing the methods and apparatus of the present invention, the needles have a width of about 500-1000 μm or preferably about 700-800 μm. Needles less than 500 μm in diameter may

also be used if they are mechanically strong enough." Respondents' July 10, 2023 Invalidity Contentions, Ex. A12 at 9 (citing Manstein at 7:41-45). But the disclosures Respondents cite actually disclose needles well outside the claimed range, stating that larger needle widths are preferrable. Thus Respondents' invalidity contentions fail to provide evidence that Manstein discloses needles with a diameter from 0.25 mm to 0.30 mm.

As another example, Manstein does not disclose "the closest neighboring electrodes are separated by a distance of 1.3 mm to 3.0 mm" as required by claim 11 of the '836 patent and claim 7 of the '379 Patent. Specifically, for these limitations, Respondents cite disclosure that "spacing between adjacent needles is preferably greater than about 1 mm apart, and may be as large as about 2 cm." Respondents' July 10, 2023 Invalidity Contentions, Ex. A12 at 10 (citing Manstein at 12 (7:61-64). But those are not the claimed electrodes, as discussed above, and further the spacing range in Manstein is too large to anticipate (or render obvious) the much tighter claimed range, which is less than 10% of the wide range disclosed in Manstein. Thus, Respondents' invalidity contentions fail to provide evidence that Manstein discloses closest neighboring electrodes separated by a distance of 1.3 to 3.0 mm.

As another example, Manstein does not disclose "[t]he method of treating skin of claim 14, wherein the RF is about 2.0 MHz and the coagulated area around each electrode is oval shaped," as required by claim 19 of the '836 Patent, or "[t]he method of treating a mammalian body of claim 10, wherein the RF is about 2.0 MHz and the section of the body segment around each electrodes where energy is applied is oval shaped," as required by claim 15 of the '379 Patent. Indeed, Respondents cite to no disclosure for these limitations. Respondents' July 10, 2023 Invalidity Contentions, Exs. A12 at *passim*. Thus Respondents' invalidity contentions fail to provide evidence

that Manstein discloses RF about 2.0 MHz or that energy applied around each electrode is oval-shaped.

As another example, Manstein does not disclose "[t]he method of treating skin of claim 14, wherein the RF is from 0.5 to 10 Mhz and the predetermined time interval is from 0.05 to 0.8 seconds," as required by claim 22 of the '836 Patent. As discussed above, claim 14 requires "applying a Alternating Current (AC) Radio Frequency (RF) signal to the plurality of electrodes" which are "configured to cause coagulation around each electrode rather than coagulating between the electrodes," limitations which Manstein fails to disclose. And once again, Respondents have failed to identify any disclosure in Manstein showing a predetermined time interval from 0.05 to 0.8 seconds.

Respondents attempt to gap-fill these glaring deficiencies in Manstein through a broad brush statement for each limitation that "[t]o the extent this limitation is not explicitly or inherently disclosed by this reference, or rendered obvious by the references disclosed herein, it would have further been obvious given the knowledge of a person of ordinary skill in the art and/or other references disclosed and/or charted in Respondents' Invalidity Contentions." Respondents' July 10, 2023 Invalidity Contentions, Exs. A12, B12, and C21 at *passim*. But Respondents' catch-all qualifications are inadequate to establish that any of the Asserted Claims are invalid. First, it is improper to rely on a person of skill's knowledge "as a wholesale substitute for reasoned analysis and evidentiary support, especially when dealing with a limitation missing from the prior art references specified." *Arendi S.A.R.L.*, 832 F.3d at 1362. Manstein's deficiencies go to critical elements of the Asserted Claims that cannot be papered over with conclusory allegations about a POSITA's background knowledge. Second, as explained in the sections discussing Respondents' other invalidity charts, the other references Respondents try to combine with Manstein each

themselves lack various limitations of the Asserted Claims. And Respondents have not cited a single reference that discloses providing or applying an Alternating Current (AC) Radio Frequency (RF) signal to the plurality of electrodes configured to cause coagulation around each electrode rather than coagulating between the electrodes.

Thus, Respondents have not established a *prima facie* case of anticipation or obviousness.

n. Exhibits A13, B13, and C13 ("Underwood")

In Exhibits A13, B13, and C13, Respondents argue that "U.S. Patent No. 6,766,202 ('Underwood') qualifies as prior art under at least AIA 35 U.S.C. § 102(a)(1) because it is a patent that published before the filing of the earliest application to which the ['836, '379, and '444 Patents] could claim priority." Respondents' July 10, 2023 Invalidity Contentions, Exs. A13, B13, and C13. Respondents further assert that:

> To the extent that the ['836, '379, or '444 Patent] is subject to pre-AIA law, Underwood qualifies as prior art under at least 35 U.S.C. § 102(b) (pre-AIA) because it is a patent that published more than one year before the filing of the earliest application to which the ['836, '379, or '444 Patent] could claim priority. Underwood also qualifies as prior art under at least 35 U.S.C. § 102(a) (pre-AIA) because it is a patent that was published prior to the alleged invention of the ['836, '379, or '444 Patent].

Id.

Respondents then contend that:

> The asserted claims of the ['836, '379, and '444 Patents] are invalid under 35 U.S.C. § 102 (AIA or pre-AIA) as anticipated by Underwood, and/or are invalid under 35 U.S.C. § 103 (AIA or pre-AIA) as obvious in view of Underwood alone, or in combination with one or more other references identified herein and/or in Respondents' Invalidity Contentions, at least based on Respondents' understanding of Complainant's application of the asserted claims in an effort to show infringement

Id.

Respondents are wrong. As discussed below, Underwood does not anticipate or render obvious (either alone or in combination) the Asserted Claims of the '836, '379, and '444 Patents.

For example, Underwood does not disclose a system or method "configured to cause coagulation around each electrode rather than coagulating between the electrodes" ('836 Patent, claims 1, 14), "apply[ing] energy to body segments around each electrode rather than to body segments between the electrodes" ('379 Patent, claims 1, 10); or "caus[ing] energy to be substantially applied to body segments around each electrode" ('444 Patent, claims, 1, 10). Specifically, for these limitations, Respondents cite disclosure that "[a]s shown in FIG. 6, the central electrode 208 has an opposite polarity from the outer electrodes 206, 210 such that electric current 162 flows between central electrode 208 and outer electrodes 206, 210 when a voltage is applied therebetween." Respondents' July 10, 2023 Invalidity Contentions, Ex. A13 (citing Underwood at 11:46-52). But this disclosure does not show energy applied around each electrode *rather than between each electrode*. Indeed, Underwood shows current flowing both around and between electrodes, disclosing only that this current is "generally confined to the region shown" which includes regions extending laterally from the electrodes and the regions between the electrodes:

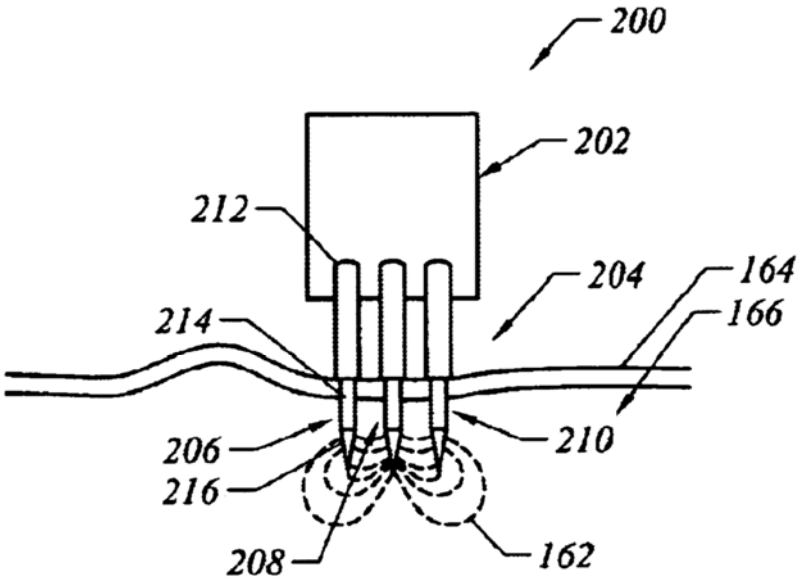

FIG. 6

Underwood, FIG. 6. But Underwood appears to be describing heating the entire region that includes the three electrodes shown. Additionally, while Respondents cite to other disclosure regarding the application of energy to the patient's skin, none of the cited disclosure relates to the application of energy / coagulation around each electrode, rather than between them. *See, e.g.*, Respondents' July 10, 2023 Invalidity Contentions, Ex. A13 at 15-17. Indeed, some of the disclosure Respondents cite instead call for ***uniform*** distribution of current, which reduces the likelihood of high current densities at the electrodes. *See, e.g., id*. (citing Underwood at 3:33-45 ("Specifically, electrodes are selected with large surface areas that present ***a substantially uniform current density to minimize high current densities at the electrode surfaces***, thereby generating a maximum current density within the dermis."). Thus Respondents' invalidity contentions fail to provide evidence that Underwood discloses a system or method "configured to cause coagulation around each electrode rather than coagulating between the electrodes" (or the similar limitations regarding the application of energy around each electrode, rather than between them).

As another example, Underwood does not disclose "the predetermined time interval is from 0.05 to 0.8 seconds," as required by claims 4, 16, 17, and 22 of the '836 Patent or "for a predetermined time interval" as required by claim 2 of the '836, '379, and '444 Patents. Specifically, for these limitations, Respondents cite disclosure that is largely unrelated to any treatment time interval. *See, e.g.*, Respondents' July 10, 2023 Invalidity Contentions, Ex. A13 at 23-34. And while Respondents also cite to Underwood's disclosure that "voltage is effectively applied continuously . . . the duty cycle (i.e., cumulative time in any one-second interval that energy is applied) is on the order of about 50% for the present invention" (*see, e.g.*, Respondents' July 10, 2023 Invalidity Contentions, Ex. A13 at 23 (citing Underwood at 6:42-52)), this general disclosure of continuous voltage and duty cycle does not show a predetermined time interval, and in fact teaches

[redacted]

away from a predetermined time interval. Thus, Respondents' invalidity contentions fail to provide evidence that Underwood discloses "the predetermined time interval is from 0.05 to 0.8 seconds" or a "predetermined time interval."

As another example, Underwood does not disclose "[t]he mammalian body treatment apparatus of claim 1, wherein the plurality of electrodes is arranged into a plurality of rows and columns and neighboring electrodes in each of the plurality of rows columns have opposite polarities" ('444 Patent, claim 5), or "[t]he mammalian body treatment apparatus of claim 1, wherein the plurality of electrodes forms a rectangular configuration and their respective polarities form a checkboard pattern" ('444 Patent, claim 7). Indeed, the portions of Underwood Respondents cite for these limitations actually confirm that Underwood does not teach these types of electrode configurations. *See, e.g.,* Respondents' July 10, 2023 Invalidity Contentions, Ex. C13 at *passim* (citing Underwood at 12:2-15; id. at FIG. 7):

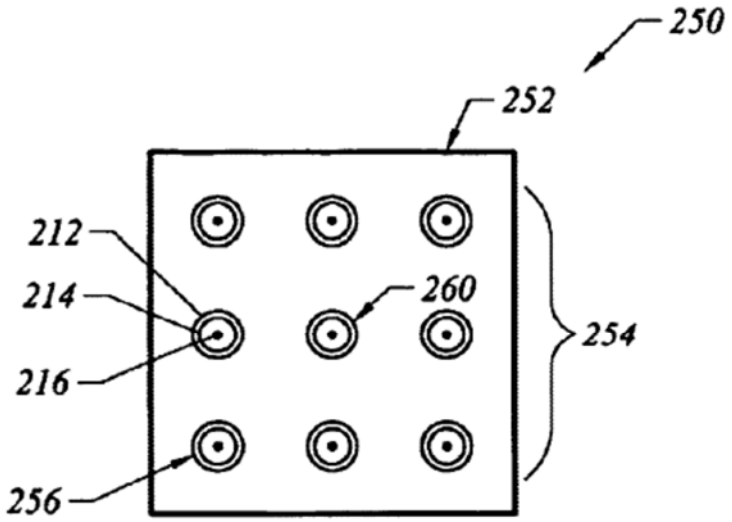

FIG. 7

Thus, Respondents' invalidity contentions fail to provide evidence that Underwood discloses the requisite electrode configuration limitations.

As another example, Underwood does not disclose "[t]he skin treatment apparatus of claim 1, wherein the plurality of electrodes are non-insulated" ('836 Patent, claim 12), "[t]he mammalian body treatment apparatus of claim 1, wherein the plurality of electrodes are non-insulated" ('379 Patent, claim 8), or "[t]he mammalian body treatment apparatus of claim 1, wherein the plurality of electrodes are non-insulated" ('444 Patent, claim 8). Specifically, for these limitations, Respondents cite disclosure from Underwood that "the needle shaped electrodes include a proximal insulated portion for minimizing electric contact with the epidermis, and a distal exposed portion for applying electric current to the underlying dermis." Respondents' July 10, 2023 Invalidity Contentions, Ex. A12 at 29-30 (citing Underwood at 4:44-50). But this disclosure actually teaches the use of insulated (or partially insulated) needles, rather than the use of non-insulated needles. Thus, Respondents' invalidity contentions fail to provide evidence that Underwood discloses electrodes which are non-insulated, or insulated except at its tip.

As another example, Underwood does not disclose "[t]he skin treatment apparatus of claim 1, wherein the electrodes are needles and have a diameter from 0.25 mm to 0.30 mm," as required by claim 9 of the '836 Patent. Specifically, for these limitations, Respondents cite disclosure from Underwood that electrodes "have a diameter in the range of about 1 to 20 mm." *See, e.g.*, Respondents' May 24, 2023 Invalidity Contentions, Ex. A13 at 30 (citing Underwood at 9:27-34). But this is disclosure of a diameter range outside of the claimed range of 0.25 mm to 0.30 mm, as required by claim 9. Thus, Respondents' invalidity contentions fail to provide evidence that Underwood discloses needles with a diameter from 0.25 mm to 0.30 mm.

As another example, the Underwood does not disclose "the closest neighboring electrodes are separated by a distance of 1.3 mm to 3.0 mm," as required by claim 11 of the '836 Patent and claim 7 of the '379 Patent. Specifically, for these limitations, Respondents cite disclosure from Underwood that "[i]n the representative embodiment, electrodes 150, 152 are spaced a distance of about 5 to 30 mm." *See, e.g.,* Respondents' July 10, 2023 Invalidity Contentions, Ex. A13 at 29 (citing Underwood at 9:8-22). But this disclosure does not show a distance between electrodes of "1.3 mm to 3.0 mm," as required by the claims, and instead discloses a range outside the specified distance. Thus, Respondents' invalidity contentions fail to provide evidence that Underwood discloses that electrodes are spaced between 1.3 mm and 3.0 mm.

As another example, Underwood does not disclose "[t]he method of treating skin of claim 14, wherein the RF is about 2.0 MHz and the coagulated area around each electrode is oval shaped," as required by claim 19 of the '836 Patent, or "[t]he method of treating a mammalian body of claim 10, wherein the RF is about 2.0 MHz and the section of the body segment around each electrodes where energy is applied is oval shaped," as required by claim 15 of the '379 Patent. Indeed, Respondents cite to no disclosure for these limitations. *See, e.g.,* Respondents' July 10, 2023 Invalidity Contentions, Ex. A13 at *passim*. Thus, Respondents' invalidity contentions fail to provide evidence that Underwood discloses these requisite limitations.

As another example, Underwood does not disclose "[t]he method of treating skin of claim 14, wherein the RF is from 0.5 to 10 Mhz and the predetermined time interval is from 0.05 to 0.8 seconds," as required by claim 22 of the '836 Patent. As discussed above, claim 14 requires electrodes "configured to cause coagulation around each electrode rather than coagulating between the electrodes," limitations which Underwood fails to disclose. And once again, Respondents have

failed to identify any disclosure of Underwood showing a predetermined time interval from 0.05 to 0.8 seconds.

Respondents attempt to gap-fill these glaring deficiencies in Underwood through a broad brush statement for each limitation that "[t]o the extent this limitation is not explicitly or inherently disclosed by this reference, or rendered obvious by the references disclosed herein, it would have further been obvious given the knowledge of a person of ordinary skill in the art and/or other references disclosed and/or charted in Respondents' Invalidity Contentions." Respondents' July 10, 2023 Invalidity Contentions, Exs. A13, B13, and C13 at *passim*. But Respondents' catch-all qualifications are inadequate to establish that any of the Asserted Claims are invalid. First, it is improper to rely on a person of skill's knowledge "as a wholesale substitute for reasoned analysis and evidentiary support, especially when dealing with a limitation missing from the prior art references specified." *Arendi S.A.R.L.*, 832 F.3d at 1362. Underwood's deficiencies go to critical elements of the Asserted Claims that cannot be papered over with conclusory allegations about a POSITA's background knowledge. Second, as explained in the sections discussing Respondents' other invalidity charts, the other references Respondents try to combine with Underwood each themselves lack various limitations of the Asserted Claims. And Respondents have not cited a single reference that discloses providing or applying an Alternating Current (AC) Radio Frequency (RF) signal to the plurality of electrodes configured to cause coagulation around each electrode rather than coagulating between the electrodes.

Thus, Respondents have not established a *prima facie* case of anticipation or obviousness.

B. The '536, '774, and '812 Patents

1. Alleged Prior Art References

Respondents' invalidity contentions for the '536, '774, and '812 Patents fail to specify how any single prior art reference describes each and every limitation of any Asserted Claim of the

’536, ’774, and ’812 Patents, as arranged in the claim. Respondents’ invalidity contentions also fail to specify how each and every limitation of any asserted claim of either the ’536, ’774, and ’812 Patents would have been obvious to a POSITA based on any single alleged prior art reference or any combination of references. Accordingly, Respondents have not shown that any Asserted Claim of the ’536, ’774, and ’812 Patents is anticipated or rendered obvious by any of the purported prior art patents, patent applications, and/or publications and purported prior art systems Respondents identify in their contentions.

Respondents now assert inherency as to some claim limitations but fail to support those contentions. For example, Respondents assert inherency as to a “deflectable electrical contact” but fail to address the requirement that the “electrical contact” be “deflectable.”

2. Anticipation and Rebuttal to Respondents’ Invalidity Exhibits

Respondents assert that the alleged prior art references anticipate or render obvious, alone or in combination with any of the prior art references its charted, one or more claims of the ’536, ’774, and ’812 Patents. *See* Respondents’ Jul 10, 2023 Invalidity Contentions at 27:

> Respondents identify in the attached Prior Art Invalidity Charts (attached hereto as Exhibits A-01 to F-12 [*sic*]), prior art references that anticipate the Asserted Claims under post-AIA and/or pre-AIA provisions of at least 35 U.S.C. §§ 102 (e.g., pre-AIA 102 (a), (b), (e), and/or (g)), either expressly or inherently, and/or render obvious the Asserted Claims under 35 U.S.C. § 103 either alone or in combination with other references.

But Respondents do not explain the basis for its assertion, other than to incorporate by reference Exhibits A-01 to F-13 to their Jul. 10, 2023 Invalidity Contentions. *See id*.

With respect to the remaining charted references, Respondents provide only bare citations and reproduced excerpts of the various references with little to no explanation or context for the citations or excerpts and no explanation of any specific combination of references or any reason why the POSITA would combine one reference with another reference. Respondents fail to

[redacted]

assert anticipation with any specificity in their contentions and these claim charts, and further fails to make any *prima facie* case of obviousness in their contentions and these claim charts. In sum, Respondents have not shown that any of the asserted '536, '774, and '812 Patents claims are invalid as anticipated or obvious.

As explained more fully below, Respondents' exhibits do not adequately set forth any grounds that would overcome the presumption of validity of the Asserted Claims of '536, '774, and '812 Patents. Serendia identifies exemplary claim limitations that either are not disclosed in a single reference or would not have been obvious to a POSITA in view of the reference or in combination with other references. Serendia's identification of any given claim limitation as not being disclosed or obvious should not be construed as an admission that other claim limitations are present in the purported prior art or would have been obvious to a POSITA in view of the purported prior art.

a. Exhibits D1, E1, and F1 ("DeAge")

In Exhibits D1, E1, and F1, Respondents argue that "[t]he DeÁge product manufactured by Dashin Enterprise, Korea ("DeÁge") qualifies as prior art under at least AIA 35 U.S.C. § 102(a)(1) because it is a product that was in public used, on sale, or otherwise available to the public before the effective filing date of the claimed invention to which the ['536, '774, and '812 Patent] could claim priority." *See* Respondents' Jul. 10, 2023 Invalidity Contentions, Exs. D1, E1, and F1.[29] Respondents then contend that:

---

[29] *See* Respondents' Jul. 10, 2023 Invalidity Contentions, Exs. D1, E1, and F1 (citing Ilooda-0006212 (#17_DeAge 09-1050 KFDA 2009.12.18._Translated_Certified); Ilooda-0006135 (DeAge 09-1050 KFDA 2009.12.18); Ilooda-0006260 (#20_DeAge - Busan Dermatology Clinic 2010.12.20_Translated_Certified); Ilooda-0006274 (DeAge - Busan Dermatology Clinic 2010.12.20); Ilooda-0006075 (#21_DeAge - Needle Structure_Translated_Certified_).; Ilooda-0006292 (DeAge - Needle Structure); Ilooda-0005831 (#22_DeAge - Receipt 2010.05.27_Certified); Ilooda-0006779 (DeAge - Receipt 2010.05.27); Ilooda-0006809 Ilooda-0006809 Ilooda-

[redacted]

> The asserted claims of the [’536, ’774, and ’812 Patents] are invalid under AIA 35 U.S.C. § 102(a)(1) as anticipated by DeÁge, and/or are invalid under AIA 35 U.S.C. § 103 as obvious in view of DeÁge alone, or in combination with one or more other references identified herein and/or in Respondents’ Invalidity Contentions, at least based on Respondents’ understanding of Complainant’s application of the asserted claims in an effort to show infringement.

Id.

As an initial matter, Respondents are wrong that the DeÁge system qualifies as prior art. As discussed above, the ’536, ’774, and ’812 Patents are entitled to a priority date before March 16, 2013, meaning pre-AIA framework applies when assessing whether a reference or system is prior art. Specifically, the ’536 patent claims priority to U.S. provisional application no. 61/449080, filed on March 3, 2011. The Asserted Claims are entitled to an effective U.S. filing date of March 3, 2011.

Under pre-AIA 35 U.S.C. 102, a prior art system has to be “known or used by others in this country … before the invention thereof by the applicant for patent” (pre-AIA 102(a)), or “… in public use or on sale in this country, more than one year prior to the date of the application for patent in the United States” (pre-AIA 102(b)). Respondents have expressly chosen to rely on the DeÁge system itself, rather than published information about this system that might qualify as prior art on other bases, and thus must establish that the system itself meets the requirements to constitute prior art under U.S. law. However, Respondents have not shown that the DeÁge system was “known or used by others in this country” prior to either the U.S. filing date of March 3, 2011. Nor have Respondents shown that the DeÁge system was “in public use or on sale in this country” prior to March 3, 2011 (one year prior to the March 3, 2011 date of the application for patent in

---

0006809 Ilooda-0006809 (#23_DeAge_flyer 3_Translated_Certified)...; Ilooda-0006808 (DeAge_flyer 3); Ilooda-0006257 Ilooda-0006257 (#24_DeAge - how to use p.11_Translated_Certified).; Ilooda-0006670 (DeAge flyer 1); Ilooda-0006759 (DeAge flyer 2); Ilooda-0006577 (DeAge flyer 4)).

the United States). Indeed, Respondents' invalidity contentions do not even contend that the DeÁge system qualifies as prior art under pre-AIA 35 U.S.C. 102, and instead rely entirely on Respondents' erroneous contention that the '536, '774, and '812 Patents should be evaluated under the post-AIA framework. For this reason alone, Respondents have failed to present a *prima facie* case of anticipation and/or obviousness in view of the DeÁge system.

ts

[redacted]

[redacted]

[redacted]

[redacted]

extendable a desired distance from an end surface. Thus Respondents' invalidity contentions fail to provide any evidence that Respondents' cited materials disclose this claim limitation.

For example, Respondents' cited materials do not disclose "wherein the proximal end includes the needle deploying motor, the motor including a draft shaft releasably couplable to the deployable needle assembly" as required by the Asserted Claims. *See* '536 Patent at cl. 13. Specifically, for this limitation, Respondents cite the DeÁge KFDA showing the handpiece components and the Needle Structure document showing what appears to be a part containing the needles. *See, e.g.,* Respondents' Jul. 10, 2023 Invalidity Contentions, Ex. D1 at 61-63. But Respondents' cited materials lack information about how components from the same or different documents and the same or different systems physically come together or interact, including for this limitation. *See, e.g.*, Ilooda-0006075; Ilooda-0006212. Respondents also fail to show the cited materials disclose a deployable needle assembly. Also, Respondents' cited materials do not disclose a motor or anything associated with one, such as location or presence of a draft (drive) shaft. *See, e.g.*, Ilooda-0006075; Ilooda-0006212. Thus Respondents' invalidity contentions fail to provide any evidence that Respondents' cited materials disclose this claim limitation.

For example, Respondents' cited materials do not disclose "the wherein at least one restorably deflectable electrical contact includes a depressible pin" as required by the Asserted Claims. *See* '536 Patent at cl. 16. Specifically, for this limitation, Respondents cite Ilooda-0006257 (#24_DeAge – how to use p.11_Translated_Certified) for instructions on how to use the device. *See, e.g.,* Respondents' Jul. 10, 2023 Invalidity Contentions, Ex. D1 at 63-65. But Respondents' cited materials lack information about how components from the same or different documents and the same or different systems physically come together or interact, including for this limitation. *See, e.g.*, Ilooda-0006075; Ilooda-0006212. Also, Respondents' cited materials do not disclose a

[redacted]

[redacted]

[redacted]

[redacted]

[redacted].

[redacted]

[redacted]

[redacted]

[redacted]

[redacted]

[redacted]

[redacted]

[redacted]

[redacted].

b. Exhibits D2, E2, and F2 ("Hantash '718 PCT")

In Exhibits D2 and F2, Respondents argue that "PCT Patent Application Publication No. WO 2007/064718 ("Hantash '718 PCT") qualifies as prior art under at least AIA 35 U.S.C. § 102(a)(1) because it is a patent that published before the filing of the earliest application to which [the '536 and '812 Patents] could claim priority." *See* Respondents' Jul. 10, 2023 Invalidity Contentions, Exs. D2, E2, and F2. Respondents further argue that, "[t]o the extent that the ['536 and '836 Patents are] treated under pre-AIA law, Hantash '718 PCT qualifies as prior art under at least 35 U.S.C. § 102(b) (pre-AIA) because it was published more than one year before the filing of the earliest application to which the ['536 and '836 Patents] patent could claim priority." *Id*. In Exhibit E2, Respondents argue that PCT Patent Application Publication No. WO 2007/064718 ("Hantash '718 PCT") qualifies as prior art under at least 35 U.S.C. § 102(b) (pre-AIA) because it

was published more than one year before the filing of the earliest application to which [the '774 Patent] could claim priority." *Id.*, Ex. E2. Respondents then assert that:

> The asserted claims of the ['536, '774, and '812 Patents] are invalid under 35 U.S.C. § 102 as anticipated by Hantash '718 PCT, and/or are invalid under 35 U.S.C. § 103 as obvious in view of Hantash '718 PCT alone, or in combination with one or more other references identified herein and/or in Respondents' Invalidity Contentions, at least based on Respondents' understanding of Complainant's application of the asserted claims in an effort to show infringement.

Id., Exs. D2, E2, and F2.

Respondents are wrong. As an initial matter, Hantash '718 PCT is a PCT filing related to U.S. Pat. App. No. 11/564,250 (U.S. Pat. Pub. No. 2007/0142885 (Hantash et al.)), which the examiner considered during prosecution of the '536, '774, and '812 patents. *See, e.g.*, '536 Patent at Cover. As the Federal Circuit has recognized, "it may be harder to meet the clear and convincing burden when the invalidity contention is based upon the same argument on the same reference that the PTO already considered." *Sciele Pharma Inc.*, 684 F.3d at 1260. As discussed further below, Hantash '718 PCT does not anticipate or render obvious (either alone or in combination) the Asserted Claims of the '536, '774, and '812 Patents.

For example, Hantash '718 PCT does not disclose a deployable needle assembly having a plurality of needles that are extendable and any related limitation. *See* '536 Patent at cl. 1 ("placing a user holdable device releasably couplable deployable needle assembly end surface on or near dermatological tissue to be treated," "the deployable needle assembly . . . including a plurality of needles extendable from the deployable needle assembly end surface"), cl. 4 ("the deployable needle assembly"), cl. 5 ("the releasably couplable deployable needle assembly"), cl. 11 ("a releasably couplable deployable needle assembly," "the deployable needle assembly . . . and including a plurality of extendable needles, a plurality of the extendable needles extendable from a deployable

needle assembly end surface"), cl. 13 ("the deployable needle assembly"); '774 Patent at cl. 11 ("a plurality of needles one of extending or extendable a desired distance from a surface"); '812 Patent at cl. 1 ("placing a user holdable device releasably couplable deployable needle module end surface on or near dermatological tissue to be treated," "the releasably couplable deployable needle module . . . including a needle assembly including a plurality of needles, the needle assembly movable within the releasably couplable deployable needle module to extend the plurality of needles from the releasably couplable deployable needle assembly end surface"), cl. 12 ("a releasably couplable deployable needle module," "the releasably couplable deployable needle . . . including a needle assembly including a plurality of needles, the needle assembly movable within the releasably couplable deployable needle module to extend the plurality of needles from the releasably couplable deployable needle assembly end surface"), cl. 13 ("the releasably couplable deployable needle assembly").

Serendia notes that, as of the date of this response, the parties have agreed to the following claim constructions:

- "extendable needles" - plain and ordinary meaning, which is needles that can be extended [from the deployable needle assembly end surface] ('536 Patent at cls. 1, 9, 11);
- "extended needles" - plain and ordinary meaning, which is needles that are extended [from the deployable needle assembly end surface] ('536 Patent at cls. 1, 9, 11); and
- "needles one of extending or extendable" - plain and ordinary meaning, which is needles that are either extended or can be extended [from the device surface] (needles "extending" a desired distance from the surface covers non-extendable needles having a fixed length; "extendable" needles covers needles which are not fixed) ('774 Patent at cls. 1, 11).

Amended Joint Claim Construction Chart.

Hantash '718 PCT discloses a handpiece 100 with an array of needles 115 mounted on a contact plate 105. Hantash '718 PCT at ¶ 34, Fig. 1.

[redacted]

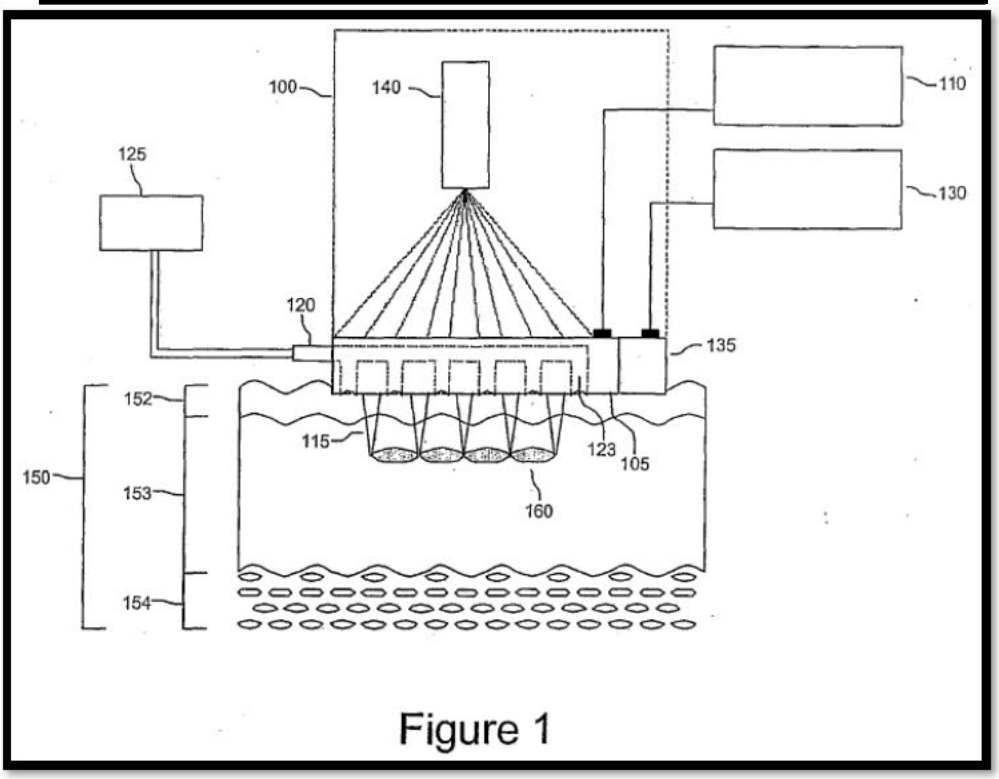

Figure 1

Hantash '718 PCT discloses the handpiece 100 is applied to the surface of the skin 150 to "causes the needles 115 to penetrate the surface of the skin 150." Hantash '718 PCT at ¶ 35, Fig. 1. Hantash '718 PCT discloses that the array of needles is removed from the skin by moving the handpiece, not by movement of the array of needles themselves. Hantash '718 PCT at ¶ 71 ("[f]ollowing treatment, the handpiece 200 is lifted from the skin to withdraw the delivery needles 118 and remove the tip 199 from the skin"), Fig. 14A, 14B. The array of needles 115 do not change position in relation to the handpiece 100 or any other component of the device, so it cannot be extended from any surface let alone a deployable needle assembly end surface or device surface. The lack of movement also means the array of needles 115 are not deployable.

As another example, Hantash '718 PCT does not disclose "one of the proximal end and the deployable needle assembly including at least one electrical conductor and the other including at least one restorably deflectable electrical contact couplable to the one of the proximal end and the

deployable needle assembly at least one electrical conductor" or limitation related to it. *See* '536 Patent at cls. 1, 11, 16 ("the wherein at least one restorably deflectable electrical contact includes a depressible pin"), 17 ("wherein a first deflectable electrical contact is coupled to a first plurality of the plurality of extendable needles and a second deflectable electrical contact is coupled to a second, different plurality of the plurality of extendable needles").

Hantash '718 PCT discloses a handpiece 100 with an array of needles 115 mounted on a contact plate 105 where a RF source 110 is connected to the array of needles 115. Hantash '718 PCT at ¶ 34, Fig. 1. Hantash '718 PCT discloses a handpiece 200 with electrical contact pads 211 and 212, where the electrical contact pads 211 and 212 are connected to an RF source, and disposable tip 199 with delivery needles 118 attached to a contact plate 105 and electrical contact pads 111 and 112, which are in electrical contact with electrical contact pads 211 and 212. Hantash '718 PCT at ¶¶ 70, 71, Fig. 14A, 14B. Hantash '718 PCT provides no disclosure that the electrical contact pads 211 and 212 or electrical contact pads 111 and 112 are "restorably deflectable electrical contact[s]" nor would a POSITA understand any of them to be so.

As another example, Hantash '718 PCT does not disclose a motor coupled to a needle assembly or a plurality of needles to cause the plurality of needles to move or extend or any limitation connected to it, or any drive shaft. *See* '536 Patent at cl. 1 ("energizing a motor coupled to a plurality of extendable needles to cause a plurality of the extendable needles to extend a desired distance from the needle assembly end surface"), cl. 11 ("a motor coupled to a plurality of extendable needles that causes the plurality of extendable needles to extend a desired distance from the needle assembly end surface when the motor is energized with a particular signal"), cl. 13 ("wherein the proximal end includes the needle deploying motor;" "the motor including a draft shaft releasably couplable to the deployable needle assembly"); '774 Patent at cl. 14 ("a motor

coupled to the plurality of extendable needles that may be directed to cause the plurality of the extendable needles to extend a desired distance from the end surface"); '812 Patent at cl. 6 ("a motor coupled to the needle assembly to cause the plurality of the needles to extend a desired distance from the releasably couplable deployable needle module end surface," as incorporated therein from claim 2 upon which claim 6 depends), cl. 13 ("a motor coupled to the needle assembly to extend the plurality of needles a desired distance from the releasably couplable deployable needle assembly end surface when the motor is energized with a particular signal"), cl. 16 ("wherein the user holdable device proximal end includes the motor;" "the motor including a drive shaft releasably couplable to the needle assembly").

Hantash '718 PCT provides no way for the array of needles to move or extend from the handpiece, and further does not disclose any releasably couplable component containing needles whose position can be adjusted relative to the handpiece. Hantash '718 PCT does not disclose a motor, let alone a change in position due to use of a motor. Due to Hantash '718 PCT not disclosing a motor, there is no disclosure of any claim limitation relating to it.

As another example, Hantash '718 PCT does not disclose an LED or any limitation connected to it. *See* '536 Patent at cl. 4 ("wherein the proximal end further includes at least one embedded LED therein and further including energizing the LED when the signal generator is energized, the at least one embedded LED illuminating the deployable needle assembly when energized"), cl. 5 ("wherein the releasably couplable deployable needle assembly includes a translucent section to communicate illumination from the least one embedded LED to the plurality of extendable needles"); '812 Patent at cl. 5 ("wherein the user holdable device proximal end further includes at least one embedded LED therein and further including energizing the at least one embedded LED so the at least one embedded LED illuminates the releasably couplable deployable

needle module," as incorporated there in from claim 4 upon which claim 5 depends; "wherein the needle assembly includes a translucent section and further including energizing the least one embedded LED to illuminate the plurality of needles via the needle assembly translucent section"), cl. 17 ("wherein the user holdable device proximal end further includes at least one embedded LED therein and the apparatus further including a photonic signal generator electrically coupled to the least one embedded LED, the at least one embedded LED capable of illuminating the needle assembly when energized").

Hantash '718 PCT does not disclose an LED and indeed Respondents cite to nothing in Hantash '718 PCT to allegedly disclose this limitation. *See* Respondents' Jul. 10, 2023 Invalidity Contentions, Exs. D2 at 21, 22 and F2 at 12. Due to Hantash '718 PCT not disclosing a LED, there is no disclosure of any claim limitation relating to it.

As another example, Hantash '718 PCT does not disclose deploying the plurality of extendable needles to a predetermined depth. *See* '536 Patent at cl. 9 ("comprising deploying the plurality of extendable needles to a predetermined depth"); '812 Patent at cl. 6 ("comprising energizing the motor to deploy the plurality of needles to a predetermined depth").

Hantash '718 PCT do not disclose array of needles 115 do not change position in relation to the handpiece 100 or any other component of the device, so there is no deploying. Relatedly then there can be no deployment to a predetermined depth.

As another example, Hantash '718 PCT does not disclose a predetermined intensity for a predetermined duty cycle. *See* '536 Patent at cl. 9 ("employing the signal generator to energize the plurality of extended needles to a predetermined intensity for a predetermined duty cycle"); '812 Patent at cl. 6 ("directing the signal generator to energize the plurality of needles at a predetermined intensity for a predetermined duty cycle").

Hantash ’718 PCT discloses results from application of two different RF pulses to different skin specimens. Hantash ’718 PCT at ¶¶ 77, 78, Figs. 15A, 15B. Hantash ’718 PCT provides no information about whether these were the result of a predetermined intensity or a duty cycle, including a predetermined duty cycle.

As another example, Hantash ’718 PCT does not disclose “the desired distance selected to enable the plurality of needles to penetrate dermatological tissue.” ’774 Patent at cl. 11.

As shown above, the array of needles 115 do not change position in relation to the handpiece 100 or any other component of the device, so it cannot be extended a desired distance from any surface.

As another example, Hantash ’718 PCT does not disclose a mechanism to extend the plurality of extendable needles a desired distance from the end surface. *See* ’774 Patent at cl. 13 (“a mechanism for causing the plurality of the extendable needles to extend a desired distance from the end surface”).

As shown above, the array of needles 115 do not change position in relation to the handpiece 100 or any other component of the device, so it cannot be extended a desired distance from any surface let alone an end surface of the device and there is no mechanism to do so.

As another example, Hantash ’718 PCT does not disclose a “releasably couplable deployable needle module” or any limitation relating to it. *See* ’812 Patent at cl. 1 (“a user holdable device releasably couplable deployable needle module end surface,” “the releasably couplable deployable needle module,” “the needle assembly movable within the releasably couplable deployable needle module”), cl. 12 (“a releasably couplable deployable needle module,” “the releasably couplable deployable needle module mechanically separatably from the user holdable device proximal end and including a needle assembly including a plurality of needles,” “the needle assembly

movable within the releasably couplable deployable needle module to extend the plurality of needles from the releasably couplable deployable needle assembly end surface").

There is no component of Hantash '718 PCT that is releasably attached to a handpiece 200 other than disposable tip 199 that includes delivery needles 118. *See, e.g.*, Hantash '718 PCT at ¶¶ 70, 71, Figs. 1, 13, 14A, 14B. Also, as shown above, the array of needles 115 do not change position in relation to the handpiece 100 or any other component of the device, so it cannot move within anything let alone releasably couplable deployable needle module.

As another example, Hantash '718 PCT does not disclose one of the at least one electrical contacts is extendable or any limitation related to it. *See* '812 Patent at cl. 19 ("herein one of the user holdable device proximal end and the needle assembly includes at least two extendable electrical contacts and the other includes at least two electrical contacts couplable to the at least two extendable electrical contacts").

Hantash '718 PCT provides no disclosure of that the electrical contact pads 211 and 212 or electrical contact pads 111 and 112 are an "extendable electrical contact" nor would a POSITA understand any of them to be so. *See, e.g.*, Hantash '718 PCT at ¶¶ 70, 71, Fig. 14A, 14B.

[redacted]

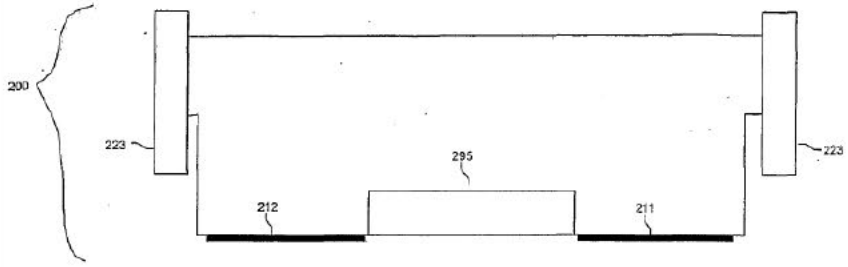

Figure 14A

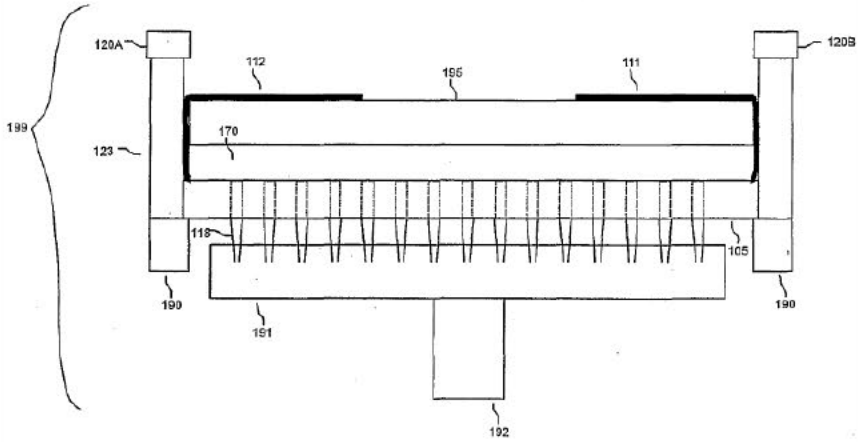

Figure 14B

As another example, Hantash '718 PCT does not disclose "one of the at least one electrical contacts includes a pin that is extendable in the same direction as the plurality of needles" or any limitation relating to it. *See* '812 Patent at cl. 18.

Hantash '718 PCT discloses electrical contact pads 211 and 212 or electrical contact pads 111 and 112 are just that pads. *See, e.g.*, Hantash '718 PCT at ¶¶ 70, 71, Fig. 14A, 14B.

As another example, Hantash '718 PCT does not disclose "a signal generator electrically coupled to the user holdable device proximal end to energize the plurality of needles." *See* '812 Patent at cl. 14.

[redacted]

Hantash '718 PCT discloses the RF source 110 is electrically coupled directly to the contact plate 105 rather than the portion of handpiece 100 connected to the contact plate 105. *See, e.g.*, Hantash '718 PCT at ¶ 34, Fig. 1.

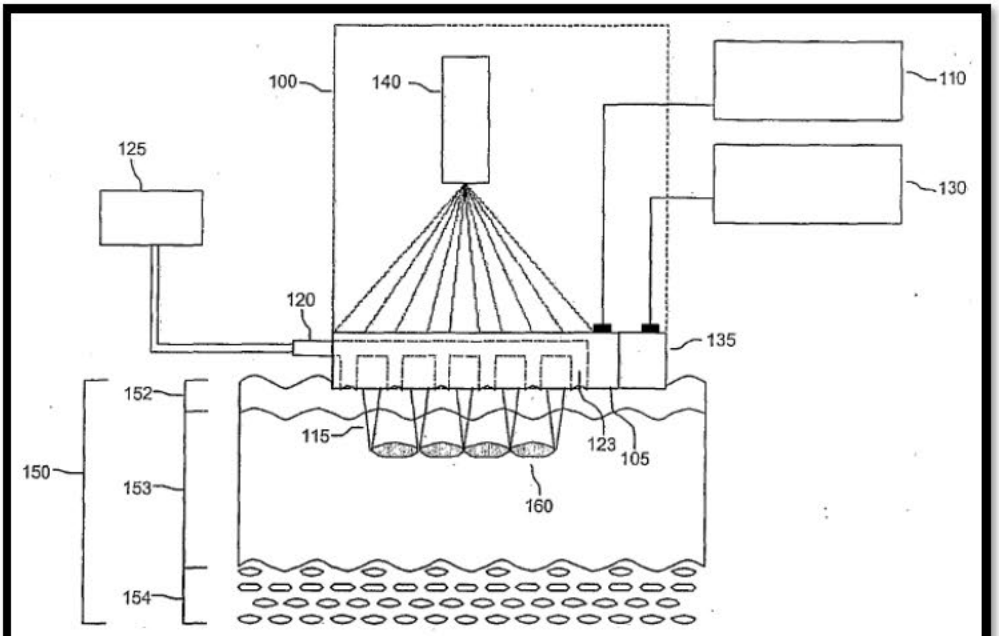

Figure 1

Respondents attempt to gap-fill these glaring deficiencies in Hantash '718 PCT through a broad brush statement for each limitation that "[t]o the extent this limitation is not explicitly or inherently disclosed by this reference, or rendered obvious by the references disclosed herein, it would have further been obvious given the knowledge of a person of ordinary skill in the art and/or other references disclosed and/or charted in Respondents' Invalidity Contentions." *See, e.g.,* Respondents' Jul. 10, 2023 Invalidity Contentions, Exs. D2, E2, and F2 at *passim*. But Respondents' catch-all qualifications are inadequate to establish that any of the Asserted Claims are invalid. First, it is improper to rely on a person of skill's knowledge "as a wholesale substitute for reasoned analysis and evidentiary support, especially when dealing with a limitation missing from the prior

art references specified." *Arendi*, 832 F.3d at 1362. Hantash '718 PCT's deficiencies go to critical elements of the Asserted Claims that cannot be papered over with conclusory allegations about a POSITA's background knowledge. Second, as explained in the sections discussing Respondents' other invalidity charts, the other references Respondents try to combine with Hantash '718 PCT each themselves lack various limitations of the Asserted Claims. Nor do Respondents explain why or how a POSITA would have combined Hantash '718 PCT's complex, vacuum-based approach to pulling the entire handpiece toward the tissue with any of the other references Respondents identified for combination with Hantash '718 PCT to arrive at the claimed inventions of the Asserted Patents.

c. Exhibits D3, E3, and F3 ("Hantash – Lasers in Surgery")

In Exhibits D3, E3, and F3, Respondents assert that

> The asserted claims of the ['536, '774, and '812 Patents] are invalid under 35 U.S.C. § 102 as anticipated by Hantash – Lasers in Surgery, and/or are invalid under 35 U.S.C. § 103 as obvious in view of Hantash – Lasers in Surgery alone, or in combination with one or more other references identified herein and/or in Respondents' Invalidity Contentions, at least based on Respondents' understanding of Complainant's application of the asserted claims in an effort to show infringement.

Id. However, Respondents later served a Supplemental Identification of Prior Art to purportedly comply with the Ground Rules of identifying primary and secondary references for invalidity contentions. June 5, 2023 Respondents' Supplemental Identification of Prior Art at 1. Therein, Respondents declined to identify Hantash – Lasers in Surgery as part of any prior art invalidity ground. June 5, 2023 Respondents' Supplemental Identification of Prior Art, Exs. 1, 5, 6. The Respondents also did not identify Hantash – Lasers in Surgery as part of any prior art invalidity ground for the '536, '774, and '812 Patents in its final invalidity contentions. Respondents' Jul. 10, 2023 Invalidity Contentions, App. 5-7. Thus, Respondents withdrew any prior art invalidity

[redacted]

ground based whole or in part on Hantash – Lasers in Surgery. To the extent Respondents are later permitted to rely on Hantash – Lasers in Surgery, Serendia reserves the right to respond.

d. Exhibits D4, E4, and F4 ("Mehta")

In Exhibits D4, E4, and F4, Respondents argue that "U.S. Patent No. 8,608,737 ("Mehta") qualifies as prior art under at least AIA 35 U.S.C. § 102(a)(1) because it is a patent that published before the filing of the earliest application to which [the '536, '774, and '812 Patents] could claim priority." *See* Respondents' Jul. 10, 2023 Invalidity Contentions, Exs. D4, E4, and F4. Respondents further argue that, "[t]o the pre-AIA law applies to the ['536, '774 and '836 Patents are], Mehta qualifies as prior art under at least 35 U.S.C. § 102(e) (pre-AIA) because it is a patent that was filed prior to the alleged invention of the ['536, '774 and '836 Patents]." *Id*. Respondents then assert that:

> The asserted claims of the ['536, '774, and '812 Patents] are invalid under 35 U.S.C. § 102 as anticipated by Mehta, and/or are invalid under 35 U.S.C. § 103 as obvious in view of Mehta alone, or in combination with one or more other references identified herein and/or in Respondents' Invalidity Contentions, at least based on Respondents' understanding of Complainant's application of the asserted claims in an effort to show infringement.

Id.

Respondents are wrong. As an initial matter, Mehta shares similarities with U.S. Pat. App. No. 12/398,924 (U.S. Pat. No. 8,540,705 ('705 Mehta). *See e.g.*, Fig. 2A of both Mehta and '705 Mehta references are identical. And the examiner considered '705 Mehta during prosecution of the '536, '774, and '812 Patents. *See, e.g.*, '812 Patent at Cover. As the Federal Circuit has recognized, "it may be harder to meet the clear and convincing burden when the invalidity contention is based upon the same argument on the same reference that the PTO already considered." *Sciele Pharma Inc*., 684 F.3d at 1260. As discussed further below, Mehta does not anticipate or

[redacted]

render obvious (either alone or in combination) the Asserted Claims of the ’536, ’774, and ’812 Patents.

For example, Mehta does not disclose a user holdable device including a proximal end and releasably couplable deployable needle assembly or module. *See* ’536 Patent at cl. 1 (“user holdable device releasably couplable deployable needle assembly end surface on or near dermatological tissue to be treated, the holdable device including a proximal end and the releasably couplable deployable needle assembly”); cl. 11 (“user holdable device including a proximal end and a releasably couplable deployable needle assembly”); ’812 Patent at cl. 1 (“user holdable device releasably couplable deployable needle module end surface on or near dermatological tissue to be treated, the user holdable device including a proximal end and the releasably couplable deployable needle module”).

Mehta provides that an electrode assembly 102 or any other part of a removable cartridge 100 are not user holdable components, and indeed cannot be so, when treatment system 200 is in use. *See, e.g.*, Mehta at 9:34-55, 14:5-19, Fig. 2A, 2D.

As another example, Mehta does not disclose a needle assembly or needle module “mechanically separatably” from a proximal end. *See* ’536 Patent at cl. 1 (“the deployable needle assembly mechanically separatably from the proximal end”), cl. 11 (“the deployable needle assembly mechanically separatably from the proximal end”); ’812 Patent at cl. 1 (“the releasably couplable deployable needle module mechanically separatably from the user holdable device proximal end”), cl. 11 (“the releasably couplable deployable needle module mechanically separatably from the user holdable device proximal end”).

Mehta discloses that removable cartridge 100, including electrode assembly 102, are inserted inside of device body 210 rather than mechanical separatable from the proximal end. *See, e.g.*, Mehta at 9:34-55, 12:22, Fig. 2A.

As another example, Mehta does not disclose "one of the proximal end and the deployable needle assembly including at least one electrical conductor and the other including at least one restorably deflectable electrical contact couplable to the one of the proximal end and the deployable needle assembly at least one electrical conductor" or limitation related to it. *See* '536 Patent at cls. 1, 11, 16 ("the wherein at least one restorably deflectable electrical contact includes a depressible pin"), 17 ("wherein a first deflectable electrical contact is coupled to a first plurality of the plurality of extendable needles and a second deflectable electrical contact is coupled to a second, different plurality of the plurality of extendable needles").

Mehta provides no information about whether a device body 210 or an electrode assembly 102 (or any other part of a removable cartridge 100) includes at least one electrical conductor or at least one restorably deflectable electrical contact couplable to the at least one electrical conductor. *See, e.g.*, Mehta at 9:34-55, 14:5-19, 15:55-16:18, Fig. 2A, 2D, 4A-D. To the extent there are any electrical conductor, Mehta discloses they are not on the proximal end or needle assembly. *See, e.g.*, Mehta at 9:34-55, 14:5-19, 15:55-16:18, Fig. 2A, 2D, 4A-D.

As another example, Mehta does not disclose "energizing a motor coupled to a plurality of extendable needles to cause a plurality of the extendable needles to extend a desired distance from the needle assembly end surface" (and similar limitations). '536 Patent at cls. 1, 11 ("a motor coupled to a plurality of extendable needles that causes the plurality of extendable needles to extend a desired distance from the needle assembly end surface when the motor is energized with a particular signal"); *see also* '812 Patent, cl. 6 ("energizing the motor to deploy the plurality of

needles to a predetermined depth," which depends from claim 2, which requires "a motor coupled to the needle assembly to cause the plurality of the needles to extend a desired distance from the releasably couplable deployable needle module end surface"), cl. 13 ("a motor coupled to the needle assembly to extend the plurality of needles a desired distance from the releasably couplable deployable needle assembly end surface when the motor is energized with a particular signal"). Mehta discloses a motor as an example of an actuator 250 that can "driv[e]" a probe array 108 with probes 104 from the removable cartridge 100. *See, e.g.*, Mehta at 10:33-39, 13:61-65, 15:34-54, Fig. 3A, 5. However, Mehta provides no information that the motor causes the probes 104 to "extend a desired distance from the needle assembly end surface." Also, Mehta does not disclose how the motor is energized and if it is by a particular signal. *See, e.g.*, Mehta at 10:33-39, 13:61-65, 15:34-54, Fig. 3A, 5.

Further, Mehta does not disclose an operable embodiment that contains both of the features identified above.

As another example, Mehta does not disclose an LED or any limitation connected to it. *See* '536 Patent at cl. 4 ("wherein the proximal end further includes at least one embedded LED therein and further including energizing the LED when the signal generator is energized, the at least one embedded LED illuminating the deployable needle assembly when energized"), cl. 5 ("wherein the releasably couplable deployable needle assembly includes a translucent section to communicate illumination from the least one embedded LED to the plurality of extendable needles"); '812 Patent at cl. 5 ("wherein the user holdable device proximal end further includes at least one embedded LED therein and further including energizing the at least one embedded LED so the at least one embedded LED illuminates the releasably couplable deployable needle module," as incorporated there in from claim 4 upon which claim 5 depends; "wherein the needle assembly

includes a translucent section and further including energizing the least one embedded LED to illuminate the plurality of needles via the needle assembly translucent section"), cl. 17 ("wherein the user holdable device proximal end further includes at least one embedded LED therein and the apparatus further including a photonic signal generator electrically coupled to the least one embedded LED, the at least one embedded LED capable of illuminating the needle assembly when energized").

LEDs are only mentioned in Mehta as part of a power on self test as associated with a visual display. *See, e.g.*, Mehta at 28:54-60. Mehta also does not disclose a light source embedded in a "proximal end" because it only discloses the light source may be at "the working end of a treatment unit 202." *See, e.g.*, Mehta at 11:21-52. Mehta does not disclose a signal generator associated with the light source because it only discloses a "energy source/supply" 90 or 94. *See, e.g.*, Mehta at 11:21-52. Mehta discloses that devices described by it "may incorporate a translucent or even transparent cooling surface;" no other component of device 200 is described as being able to be translucent, transparent—and indeed no part is described as illuminated. *See, e.g.*, Mehta at 22:63-23:2.

As another example, Mehta does not disclose deploying the plurality of extendable needles to a predetermined depth. *See* '536 Patent at cl. 9 ("comprising deploying the plurality of extendable needles to a predetermined depth"); '812 Patent at cl. 6 ("comprising energizing the motor to deploy the plurality of needles to a predetermined depth"). Mehta provides no description of setting a predetermined depth for deployment of the probes 104. *See, e.g.*, Mehta at 32:26-33:29.

As another example, Mehta does not disclose a predetermined intensity for a predetermined duty cycle for energization. *See* '536 Patent at cl. 9 ("employing the signal generator to energize the plurality of extended needles to a predetermined intensity for a predetermined duty cycle");

’812 Patent at cl. 6 (“directing the signal generator to energize the plurality of needles at a predetermined intensity for a predetermined duty cycle”).

Mehta discloses that its “low energy” system allows for “continual delivery of RF energy during a treatment cycle.” Mehta at 20:13-19. Mehta discloses a “duty cycle of variations of the present system” can be used with “pulsed deliveries of energy.” Mehta at 20:21-26. Mehta does not provide information about whether the pulses are at a predetermined intensity or whether there is a predetermined duty cycle. *See, e.g.*, Mehta at 19:26-44, 20:13-47, Fig. 6. For Mehta, one of the goals of the pulses is to have improved temperature measurements while reaching a “pre-determined temperature for a pre-determined time.” Mehta at 20-13-28. Mehta discloses applying energy and maintaining that energy at a certain pre-determined level but does not describe doing it with a predetermined intensity for a predetermined duty cycle. *See, e.g.*, Mehta at 19:26-44. Also, Mehta discloses Fig. 6 where the time of a spike of energy differs from spike to spike for no apparently explained reason. *See, e.g.*, Mehta at Fig. 6.

As another example, Mehta does not disclose “a first deflectable electrical contact is coupled to a first plurality of the plurality of extendable needles and a second deflectable electrical contact is coupled to a second, different plurality of the plurality of extendable needles.” ’536 Patent at cl. 17. Similarly, Mehta does not disclose “a first electrical contact of the at least one electrical contact is electrically coupled to a first plurality of the plurality of needles and a second electrical contact of the at least one electrical contact is electrically coupled to a second, different plurality of the plurality of needles.”

As another example, Mehta does not disclose a plurality of needles extending or extendable a desired distance. *See* ’774 Patent at cl. 11 (“a plurality of needles one of extending or extendable a desired distance from a surface, the desired distance selected to enable the plurality of needles to

[redacted]

penetrate dermatological tissue"), 12 ("the end surface including a plurality of needles extendable a desired distance from the end surface"), 13 ("a mechanism for causing the plurality of the extendable needles to extend a desired distance from the end surface"), 14 ("a motor coupled to the plurality of extendable needles that may be directed to cause the plurality of the extendable needles to extend a desired distance from the end surface").

Mehta discloses a motor as an example of an actuator 250 that can "driv[e]" a probe array 108 with probes 104 from the removable cartridge 100. *See, e.g.*, Mehta at 10:33-39, 13:61-65, 15:34-54, Fig. 3A, 5. However, Mehta provides no information the actuator 250 causes the probes 104 to extend a "desired distance" from a surface.

As another example, Mehta does not disclose a "directing the signal generator to produce periodic pulsed radio frequency signals across the plurality of needles for a predetermined time interval." *See* '812 Patent at cl. 10. Mehta discloses Fig. 6 the time of a spike of energy differs from spike to spike (width of spike on the graph), which removes periodicity and a predetermined time intervals from the spikes, for no explained reason. *See, e.g.*, Mehta at 20:29-55, Fig. 6.

As another example, Mehta does not disclose electrical coupling is maintained during extension of a plurality of needles. *See* '812 Patent at cls. 1 ("the needle assembly movable within the releasably couplable deployable needle module to extend the plurality of needles from the releasably couplable deployable needle assembly end surface while at least one electrical contact of the needle assembly remains electrically coupled to at least one electrical contact of the user holdable device proximal end"), 12 ("the needle assembly movable within the releasably couplable deployable needle module to extend the plurality of needles from the releasably couplable deployable needle assembly end surface while at least one electrical contact of the needle assembly remains electrically coupled to at least one electrical contact of the user holdable device proximal

end"). Mehta discloses connection portions 116 can "maintain contact with a corresponding contact point trace on a connection board during movement of the electrode assembly 102." Mehta at 16:12-18. However, Mehta discloses that electrical connections are not necessarily maintained during the extending of a plurality of needles between components of system 200. Mehta at 16:62-65 ("in certain variations of the system, the electrodes are only coupled to the power supply when in a treatment position and are incapable of delivering energy when in a retracted position"), 15:65-16:1 ("In another variation, the electrode assembly and connection board are configured to permit temperature detection at all times but only energy delivery in the treatment position.").

As another example, Mehta does not disclose one of the at least one electrical contacts is extendable or any limitation related to it. *See* '812 Patent at cl. 19 ("herein one of the user holdable device proximal end and the needle assembly includes at least two extendable electrical contacts and the other includes at least two electrical contacts couplable to the at least two extendable electrical contacts"). Mehta provides no disclosure that contact portions 116 are an "extendable electrical contact" nor would a POSITA understand any of them to be so. *See, e.g.*, Mehta at 15:55-16:18, Fig. 4A-D.

As another example, Mehta does not disclose "wherein one of the at least one electrical contacts includes a pin that is extendable in the same direction as the plurality of needles." *See* '812 Patent at cl. 18. Mehta discloses electrical contacts 116 may "comprise spring contacts or spring pins," but does not state they extend in the same direction of as the plurality of needles. Mehta at 16:12-18. In fact, the electrical contacts would likely spring perpendicular to the movement of the plurality of needles as at base it is connected to electrode assembly 102 that moved in the horizontal-type direction, while the electrical contacts 116 face the vertical-type direction. *See, e.g.*, Mehta at Fig. 16:53-54, 4C.

[redacted]

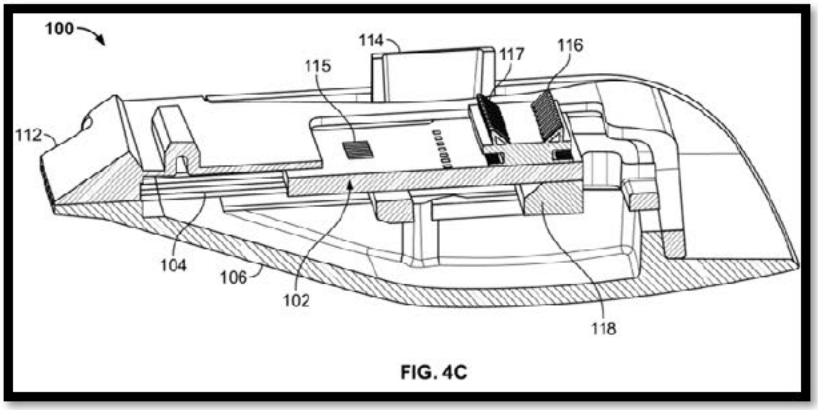

FIG. 4C

As another example, Mehta does not disclose "wherein a first electrical contact of the at least one electrical contact is electrically coupled to a first plurality of the plurality of needles and a second electrical contact of the at least one electrical contact is electrically coupled to a second, different plurality of the plurality of needles." *See* '812 Patent at cl. 10.

Mehta discloses two arrays of probes 104, 126 in Fig. 7C in Figs. 4D and 4F, but includes no information about the electrical coupling for those configurations. Mehta at 17:22-32, 17:46-18:3, 23:11-35, Fig. 4D, 4F, 7C.

Respondents attempt to gap-fill these glaring deficiencies in Mehta through a broad brush statement for each limitation that "[t]o the extent this limitation is not explicitly or inherently disclosed by this reference, or rendered obvious by the references disclosed herein, it would have further been obvious given the knowledge of a person of ordinary skill in the art and/or other references disclosed and/or charted in Respondents' Invalidity Contentions." *See, e.g.,* Respondents' Jul. 10, 2023 Invalidity Contentions, Exs. D4, E4, and F4 at *passim*. But Respondents' catch-all qualifications are inadequate to establish that any of the Asserted Claims are invalid. First, it is improper to rely on a person of skill's knowledge "as a wholesale substitute for reasoned analysis and evidentiary support, especially when dealing with a limitation missing from the prior art references specified." *Arendi*, 832 F.3d at 1362. Mehta's deficiencies go to critical elements of the

Asserted Claims that cannot be papered over with conclusory allegations about a POSITA's background knowledge. Second, as explained in the sections discussing Respondents' other invalidity charts, the other references Respondents try to combine with Mehta each themselves lack various limitations of the Asserted Claims.

e. Exhibits D5, E5, and F5 ("Miratone")

In Exhibits D5, E5, and F5, Respondents argue that:

> The Primaeva Medical Miratone System (also known as the Renesis System) (hereinafter "Miratone") qualifies as prior art under at least 35 U.S.C. § 102(a). On information and belief, Miratone was offered for sale, sold, and/or used in the United States by at least September 1, 2009 and is therefore prior art to the ['536, '774, and '812 Patents].

See Respondents' Jul. 10, 2023 Invalidity Contentions, Exs. D5, E5, and F5. Respondents then contend that:

> The asserted claims of the ['536, '774, and '812 Patents] are invalid under 35 U.S.C. § 102 as anticipated by Miratone, and/or are invalid under 35 U.S.C. § 103 as obvious in view of Miratone alone, or in combination with one or more other references identified herein and/or in Respondents' Invalidity Contentions, at least based on Respondents' understanding of Complainant's application of the asserted claims in an effort to show infringement.

Id.

As an initial matter, Respondents are wrong that the Miratone system qualifies as prior art. As discussed above, the '536, '774, and '812 Patents are entitled to a priority date before March 16, 2013, meaning pre-AIA framework applies when assessing whether a reference or system is prior art. Specifically, the '536 patent claims priority to U.S. provisional application no. 61/449080, filed on March 3, 2011. The Asserted Claims are entitled to an effective U.S. filing date of March 3, 2011.

Under pre-AIA 35 U.S.C. 102, a prior art system has to be "known or used by others in this country … before the invention thereof by the applicant for patent" (pre-AIA 102(a)), or "…

in public use or on sale in this country, more than one year prior to the date of the application for patent in the United States" (pre-AIA 102(b)). Respondents have expressly chosen to rely on the Miratone system itself, rather than published information about this system that might qualify as prior art on other bases, and thus must establish that the system itself meets the requirements to constitute prior art under U.S. law. However, Respondents have not shown that the Miratone system was "known or used by others in this country" prior to either the U.S. filing date of March 3, 2011. Nor have Respondents shown that the Miratone system was "in public use or on sale in this country" prior to March 3, 2010 (one year prior to the March 3, 2011 date of the application for patent in the United States).

Instead, Respondents contend that "***[o]n information and belief***, Miratone was offered for sale, sold, and/or used in the United States by at least September 1, 2009 and is therefore prior art to the '836 Patent." *See, e.g.*, Respondents' Jul. 10, 2023 Invalidity Contentions, Ex. D5, at 1. But Respondents provide no evidence that the Miratone system was "offered for sale," "sold," or "used" in the United States prior to March 3, 2011. And while Respondents point to FDA documents, articles, user and service manuals, a quick reference guide, and a device license about the Miratone system, the evidence Respondents cite: 1) do not indicate where any such products were actually used (or used in the United States); and 2) relate to multiple distinct products, including the Primaeva Medical "Renesis" product, the Primaeva Medical "Miratone" product, and Syneron "ePrime" product, which Respondents improperly cobble together without any evidence that these references describe a single product. *See, e.g.*, Primaeva Miratone K082391 - FDA decision.pdf (Ilooda-0004850 at pdf pages 663-702 ("***Miratone*** Instructions")); *id.* at pdf pages 486-528 ("***Renesis*** User Manual"); Hantash, et al., *Pilot Clinical Study of a Novel Minimally Invasive Bipolar Microneedle Radio Frequency Device*, LASERS IN SURGERY AND MEDICINE 41:87–

95 (2009) ("Hantash 2009") (RESPONDENTS_PA0000398 at 399) (discussing the "***RenesisTM***, Primaeva Medical" device); *id.* at RESPONDENTS_PA0000403 ("The results of this study have shown that the ***Renesis system*** can create radiofrequency thermal zones (RFTZTM) within the reticular dermis."); Berube, et al., *A Predictive Model of Minimally Invasive Fractional Radiofrequency Skin Treatment*, LASERS IN SURGERY AND MEDICINE 41:473–478 (2009) ("Berube") (RESPONDENTS_ PA0000138 at 139 (discussing the "[t]he bipolar FRF device (***MiratoneTM*,** Primaeva Medical, Inc., Pleasanton, CA) modeled in this study…"); Armenakas, et al., *Blinded, Randomized, Quantitative Grading Comparison of Minimally Invasive, Fractional Radiofrequency and Surgical Face-lift to Treat Skin Laxity*, ARCH DERMATOL. 2010; 146(4):396–405 ("Alexiades") (Ilooda-0006760 at 761) (discussing "the ***Miratone*** minimally invasive bipolar fractional RF (FRF) system."); CMI-000109 ("***ePrime*** User Manual"), dated July 2010; CMI-000176 (FDA decision on "Primaeva Medical Miratone System"); CMI-000186 (FDA decision on Syneron's "Profound System"); CMI-000195 ("***ePrime*** Quick Reference Guide") dated June 2010; CMI-000203 ("***ePrime*** Medical Device License") dated January 12, 2011; Willey, et al., Elastometry and Clinical Results After Bipolar Radiofrequency Treatment of Skin, DERMATOL SURG 2010;36:877–884 ("Willey") (CMI-000216–23); CMI-000224 ("***ePrime*** Service Manual"), dated February 2011; CMI-000382 ("ePrime Service Toolkit"), dated June 2011; CMI-000396 ("ePrime Brochure"); Wilson, Kevin A., ePrime Raises Minimally Invasive Volumization to New Heights, THE AESTHETIC GUIDE (March/April 2011) (CMI-000401) ("Wilson"); ePrime prelaunch, COSMETIC NEWS UK (July 2011) (CMI-000405, -415). In fact, the evidence shows that the product used to obtain FDA clearance was not a full functioning Miratone product but rather a few components assembled outside a console and controlled by a separate laptop. Renton Dep. Tr. at 193:16-194:10; 266:24-267:10.

Respondents have not shown that any Miratone system was in public use practicing the asserted method claims or that such a system in public use or on sale, or otherwise available to the public, was configured to practice the asserted system claims. To the contrary, the evidence shows that the purported Miratone system was not publicly displayed as a functioning product. Renton Dep. Tr. at 29:22-30:25; 182:12-16; 193:16-194:10. Regardless, even if the Miratone system did qualify as prior art to the ’536, ’774, and ’812 Patents (and it does not), the Miratone system does not anticipate or render obvious (either alone or in combination) the Asserted Claims the ’536, ’774, and ’812 Patents.

For example, Respondents’ cited materials do not disclose “placing a user holdable device releasably couplable deployable needle assembly end surface on or near dermatological tissue to be treated, the holdable device including a proximal end and the releasably couplable deployable needle assembly” as required by the Asserted Claims. *See* ’536 Patent at cl. 1. Specifically, for this limitation, Respondents cite to various documents supposedly connected to the Miratone system. *See, e.g.,* Respondents’ Jul. 10, 2023 Invalidity Contentions, Ex. D5 at 4-13. But the various documents fail to show that all requirements of this claim limitation are met. *See, e.g.* Hantash 2009 at Fig. 1; Ilooda-0004850 at Ilooda-0005573 (Miratone K082391.pdf). Further, the evidence shows that the needle assembly was not releasably couplable. Renton Dep. Tr. at 27:25-28:11; 28:22-29:21. Thus Respondents’ invalidity contentions fail to provide any evidence that the Miratone system discloses this claim limitation.

For example, Respondents’ cited materials do not disclose “the deployable needle assembly mechanically separatably from the proximal end and including a plurality of needles extendable from the deployable needle assembly end surface” as required by the Asserted Claims. *See* ’536 Patent at cl. 1. Specifically, for this limitation, Respondents cite to various documents

supposedly connected to the Miratone system. *See, e.g.,* Respondents' Jul. 10, 2023 Invalidity Contentions, Ex. D5 at 14-18. But the Miratone system discloses that the sterile disposable microneedle electrode assembly and component of it are inside a reusable handpiece rather than mechanical separatable from the proximal end. *See, e.g.*, Hantash 2009 at Fig. 1; Ilooda-0004850 at Ilooda-0005573 (Miratone K082391.pdf). Further, the evidence shows that the needle assembly was not mechanically separatably from the proximal end of the user holdable device. Renton Dep. Tr. at 27:25-28:11; 28:22-29:21. Thus Respondents' invalidity contentions fail to provide any evidence that the Miratone system discloses this claim limitation.

For example, Respondents' cited materials do not disclose "one of the proximal end and the deployable needle assembly including at least one electrical conductor and the other including at least one restorably deflectable electrical contact couplable to the one of the proximal end and the deployable needle assembly at least one electrical conductor" as required by the Asserted Claims. *See* '536 Patent at cl. 1. Specifically, for this limitation, Respondents cite Treatment Applicator and an Electrode Cartridge. *See, e.g.,* Respondents' Jul. 10, 2023 Invalidity Contentions, Ex. D5 at 19-21. But the Miratone system provides no information about whether a Treatment Applicator (or reuseable handpiece) or an Electrode Cartridge (or sterile disposable microneedle electrode assembly) includes at least one electrical conductor or at least one restorably deflectable electrical contact couplable to the at least one electrical conductor. *See, e.g.*, Hantash 2009 at Fig.1, Alexiades at Fig.1, Ilooda-0004850 at Ilooda-0005564 (Primaeva Miratone K082391.pdf). Respondents also have failed to identify information about where any electrical contacts are. *See, e.g.*, Hantash 2009 at Fig.1, Alexiades at Fig.1, Ilooda-0004850 at Ilooda-0005564 (Primaeva Miratone K082391.pdf). Thus Respondents' invalidity contentions fail to provide any evidence that the Miratone system discloses this claim limitation.

For example, Respondents' cited materials do not disclose "energizing a motor coupled to a plurality of extendable needles to cause a plurality of the extendable needles to extend a desired distance from the needle assembly end surface" as required by the Asserted Claims. *See* '536 Patent at cl. 1. Specifically, for this limitation, Respondents cite to a smart electrode deployment system (SEDS) with spring loaded deployment mechanism. *See, e.g.,* Respondents' Jul. 10, 2023 Invalidity Contentions, Ex. D5 at 23-25. But the Miratone system does not disclose a motor or any motor that causes a plurality of extendable needles to extend a desired distance from the needle assembly end surface. *See, e.g.*, Hantash 2009 at 87-88, Alexiades at Fig.1, Ilooda-0004850 at Ilooda-0005564 (Primaeva Miratone K082391.pdf). The "retract" button would "arm the device" and the "release" button would deploy the electrodes 6 mm at a 20-degree angle—there was no functionality that permitted control over the insertion distance. *See also* Renton Dep. Tr. at 27:1-6. Thus Respondents' invalidity contentions fail to provide any evidence that the Miratone system discloses this claim limitation.

For example, Respondents' cited materials do not disclose "wherein the proximal end further includes at least one embedded LED therein and further including energizing the LED when the signal generator is energized, the at least one embedded LED illuminating the deployable needle assembly when energized" as required by the Asserted Claims. *See* '536 Patent at cl. 4. Indeed, Respondents' invalidity contentions do not cite any evidence that the Miratone system discloses this limitation, instead just asserting that "Miratone discloses and/or renders obvious the method of claim 1. *See* claim 1. To the extent this limitation is not explicitly or inherently disclosed by this reference, or rendered obvious by the references disclosed herein, it would have further been obvious given the knowledge of a person of ordinary skill in the art and/or other references disclosed and/or charted in Respondents' Invalidity Contentions, at least for the reasons set forth in

these Contentions." *See, e.g.*, Respondents' Jul. 10, 2023 Invalidity Contentions, Ex. D5 at 28. Thus Respondents' invalidity contentions fail to provide any evidence that the Miratone system discloses this claim limitation.

For example, Respondents' cited materials do not disclose "wherein the releasably couplable deployable needle assembly includes a translucent section to communicate illumination from the least one embedded LED to the plurality of extendable needles" as required by the Asserted Claims. *See* '536 Patent at cl. 5. Indeed, Respondents' invalidity contentions do not cite any evidence that the Miratone system discloses this limitation, instead just asserting that "Miratone discloses and/or renders obvious the method of claim 1. *See* claim 4. To the extent this limitation is not explicitly or inherently disclosed by this reference, or rendered obvious by the references disclosed herein, it would have further been obvious given the knowledge of a person of ordinary skill in the art and/or other references disclosed and/or charted in Respondents' Invalidity Contentions, at least for the reasons set forth in these Contentions." *See, e.g.*, Respondents' Jul. 10, 2023 Invalidity Contentions, Ex. D5 at 28. Further, the evidence shows that the needle assembly was not releasably couplable. Renton Dep. Tr. at 27:25-28:11; 28:22-29:21. Thus Respondents' invalidity contentions fail to provide any evidence that the Miratone system discloses this claim limitation.

For example, Respondents' cited materials do not disclose "a user holdable device including a proximal end and a releasably couplable deployable needle assembly" as required by the Asserted Claims. *See* '536 Patent at cl. 11. Specifically, for this limitation, Respondents cite to various documents supposedly connected to the Miratone system. *See, e.g.,* Respondents' Jul. 10, 2023 Invalidity Contentions, Ex. D5 at 33-38. But the various documents fail to show that all requirements of this claim limitation are met. *See, e.g.* Hantash 2009 at Fig. 1; Ilooda-0004850 at

Ilooda-0005573 (Miratone K082391.pdf). Further, the evidence shows that the needle assembly was not releasably couplable. Renton Dep. Tr. at 27:25-28:11; 28:22-29:21. Thus Respondents' invalidity contentions fail to provide any evidence that the Miratone system discloses this claim limitation.

For example, Respondents' cited materials do not disclose "the deployable needle assembly mechanically separatably from the proximal end and including a plurality of extendable needles, a plurality of the extendable needles extendable from a deployable needle assembly end surface" as required by the Asserted Claims. *See* '536 Patent at cl. 11 Specifically, for this limitation, Respondents cite to various documents supposedly connected to the Miratone system. *See, e.g.,* Respondents' Jul. 10, 2023 Invalidity Contentions, Ex. D5 at 39-43. But the Miratone system discloses that the sterile disposable microneedle electrode assembly and component of it are inside a reuseable handpiece rather than mechanical separatable from the proximal end. *See, e.g.*, Hantash 2009 at Fig. 1; Ilooda-0004850 at Ilooda-0005573 (Miratone K082391.pdf). Further, the evidence shows that the assembly was not mechanically separatably from the proximal end of the user holdable device. Renton Dep. Tr. at 27:25-28:11; 28:22-29:21. Thus Respondents' invalidity contentions fail to provide any evidence that the Miratone system discloses this claim limitation.

For example, Respondents' cited materials do not disclose "one of the proximal end and the deployable needle assembly including at least one electrical conductor and the other including at least one restorably deflectable electrical contact couplable to the one of the proximal end and the deployable needle assembly at least one electrical conductor" as required by the Asserted Claims. *See* '536 Patent at cl. 11. Specifically, for this limitation, Respondents cite Treatment Applicator and an Electrode Cartridge. *See, e.g.,* Respondents' Jul. 10, 2023 Invalidity Contentions, Ex. D5 at 49-51. But the Miratone system provides no information about whether a

Treatment Applicator (or reuseable handpiece) or an Electrode Cartridge (or sterile disposable microneedle electrode assembly) includes at least one electrical conductor or at least one restorably deflectable electrical contact couplable to the at least one electrical conductor. *See, e.g.*, Hantash 2009 at Fig.1, Alexiades at Fig.1, Ilooda-0004850 at Ilooda-0005564 (Primaeva Miratone K082391.pdf). Respondents also have failed to identify information about where any electrical contacts are. *See, e.g.*, Hantash 2009 at Fig.1, Alexiades at Fig.1, Ilooda-0004850 at Ilooda-0005564 (Primaeva Miratone K082391.pdf). Thus Respondents' invalidity contentions fail to provide any evidence that the Miratone system discloses this claim limitation.

For example, Respondents' cited materials do not disclose "a motor coupled to a plurality of extendable needles that causes the plurality of extendable needles to extend a desired distance from the needle assembly end surface when the motor is energized with a particular signal" as required by the Asserted Claims. *See* '536 Patent at cl. 11. Specifically, for this limitation, Respondents cite to a smart electrode deployment system (SEDS) with spring loaded deployment mechanism. *See, e.g.,* Respondents' Jul. 10, 2023 Invalidity Contentions, Ex. D5 at 51-52. But the Miratone system does not disclose a motor or whether it causes a plurality of extendable needles to extend a desired distance from the needle assembly end surface. *See, e.g.*, Hantash 2009 at Fig.1, Alexiades at Fig.1, Ilooda-0004850 at Ilooda-0005564 (Primaeva Miratone K082391.pdf). *See also* Renton Dep. Tr. at 27:1-6. Thus Respondents' invalidity contentions fail to provide any evidence that the Miratone system discloses this claim limitation.

For example, Respondents' cited materials do not disclose "wherein the proximal end includes the needle deploying motor, the motor including a draft shaft releasably couplable to the deployable needle assembly" as required by the Asserted Claims. *See* '536 Patent at cl. 13. Specifically, for this limitation, Respondents cite to a smart electrode deployment system (SEDS) with

spring loaded deployment mechanism. *See, e.g.,* Respondents' Jul. 10, 2023 Invalidity Contentions, Ex. D5 at 55-56. But the Miratone system does not disclose any motor, let alone a motor including a draft (drive) shaft releasably couplable to the deployable needle assembly. *See, e.g.*, Hantash 2009 at Fig.1, Alexiades at Fig.1, Ilooda-0004850 at Ilooda-0005564 (Primaeva Miratone K082391.pdf). *See also* Renton Dep. Tr. at 27:1-6. Thus Respondents' invalidity contentions fail to provide any evidence that the Miratone system discloses this claim limitation.

For example, Respondents' cited materials do not disclose "the wherein at least one restorably deflectable electrical contact includes a depressible pin" as required by the Asserted Claims. *See* '536 Patent at cl. 16. Specifically, for this limitation, Respondents cite to an ePrime clinical user manual (CMI-000109 at CMI-000132) and an ePrime service manual (CMI-000224 at CMI000254). *See, e.g.,* Respondents' Jul. 10, 2023 Invalidity Contentions, Ex. D5 at 56-57. But the Miratone system does not disclose at least one restorably deflectable electrical contact includes a depressible pin because a "homing pin" is not one. Thus Respondents' invalidity contentions fail to provide any evidence that the Miratone system discloses this claim limitation.

For example, Respondents' cited materials do not disclose "wherein a first deflectable electrical contact is coupled to a first plurality of the plurality of extendable needles and a second deflectable electrical contact is coupled to a second, different plurality of the plurality of extendable needles" as required by the Asserted Claims. *See* '536 Patent at cl. 17. Specifically, for this limitation, Respondents cite "[e]ach of the five electrode pairs were controlled independently by the generator" and "electrically isolated.". *See, e.g.,* Respondents' Jul 10, 2023 Invalidity Contentions, Ex. D5 at 57-58. But the Miratone system does not disclose a restorably deflectable electrical contact and Respondents have not identified how any contacts are coupled. *See, e.g.*, Hantash 2009 at 88, Ilooda-0004850 (Primaeva Miratone K082391.pdf) at pdf p. 715. Thus Respondents'

[redacted]

invalidity contentions fail to provide any evidence that the Miratone system discloses this claim limitation.

For example, Respondents' cited materials do not disclose "a device including a plurality of needles one of extending or extendable a desired distance from a surface, the desired distance selected to enable the plurality of needles to penetrate dermatological tissue" as required by the Asserted Claims. *See* '774 Patent at cl. 11. Specifically, for this limitation, Respondents cite to various documents supposedly connected to the Miratone system. *See, e.g.,* Respondents' Jul. 10, 2023 Invalidity Contentions, Ex. E5 at 4-9. But the Miratone system does not disclose a needles extending or being extendable a desired distance from a surface. *See, e.g.*, Hantash 2009 at Fig.1, Alexiades at Fig.1, Ilooda-0004850 at Ilooda-0005564 (Primaeva Miratone K082391.pdf). Thus Respondents' invalidity contentions fail to provide any evidence that the Miratone system discloses this claim limitation.

For example, Respondents' cited materials do not disclose "a signal generator electrically coupled to the plurality of extended needles to produce pulsed radio frequency signals across the plurality of needles to affect dermatological tissue near the plurality of needles" as required by the Asserted Claims. *See* '774 Patent at cl. 11. Specifically, for this limitation, Respondents cite the Miratone system for delivering "FRF energy" "through 5 microneedle electrode pairs". *See, e.g.,* Respondents' Jul. 10, 2023 Invalidity Contentions, Ex. E5 at 10-12. But the Miratone system does not disclose producing pulsed radio frequency signals across the plurality of needles. *See, e.g.*, Hantash 2009 at 87-88, Berube at 474, 474, Alexiades at 397, Ilooda-0004850 at Ilooda-0005516, Ilooda-0005564 (Primaeva Miratone K082391.pdf). Thus Respondents' invalidity contentions fail to provide any evidence that the Miratone system discloses this claim limitation.

For example, Respondents' cited materials do not disclose "wherein the device includes an end surface configured to be placed on or near dermatological tissue to be treated, the end surface including a plurality of needles extendable a desired distance from the end surface" as required by the Asserted Claims. *See* '774 Patent at cl. 12. Specifically, for this limitation, Respondents cite "[e]ach electrode of a pair is designed to penetrate 6 mm within the skin at an angle of 20 [degrees] to the surface of the skin.". *See, e.g.,* Respondents' Jul. 10, 2023 Invalidity Contentions, Ex. E5 at 12-18. But the Miratone system does not disclose needles extendable a desired distance from a surface. *See, e.g.*, Hantash 2009 at Fig.1, Alexiades at Fig.1, Ilooda-0004850 at Ilooda-0005564 (Primaeva Miratone K082391.pdf). Thus Respondents' invalidity contentions fail to provide any evidence that the Miratone system discloses this claim limitation.

For example, Respondents' cited materials do not disclose "further including a mechanism for causing the plurality of the extendable needles to extend a desired distance from the end surface" as required by the Asserted Claims. *See* '774 Patent at cl. 13. Specifically, for this limitation, Respondents cite to a smart electrode deployment system (SEDS) with spring loaded deployment mechanism to deploy the electrodes. *See, e.g.,* Respondents' Jul. 10, 2023 Invalidity Contentions, Ex. E5 at 18-23. But the Miratone system does not disclose the plurality of the extendable needles to extend "a desired distance from the end surface." *See, e.g.*, Hantash 2009 at Fig.1, Alexiades at Fig.1, Ilooda-0004850 at Ilooda-0005564 (Primaeva Miratone K082391.pdf). Thus Respondents' invalidity contentions fail to provide any evidence that the Miratone system discloses this claim limitation.

For example, Respondents' cited materials do not disclose "placing a user holdable device releasably couplable deployable needle module end surface on or near dermatological tissue to be treated, the user holdable device including a proximal end and the releasably couplable deployable

needle module" as required by the Asserted Claims. *See* '812 Patent at cl. 1. Specifically, for this limitation, Respondents cite to various documents supposedly connected to the Miratone system. *See, e.g.,* Respondents' Jul. 10, 2023 Invalidity Contentions, Ex. F5 at 4-13. But the various documents fail to show that all requirements of this claim limitation are met. *See, e.g.* Hantash 2009 at Fig. 1; Ilooda-0004850 at Ilooda-0005573 (Miratone K082391.pdf). Further, the evidence shows that the needle module was not releasably couplable. Renton Dep. Tr. at 27:25-28:11; 28:22-29:21. Thus Respondents' invalidity contentions fail to provide any evidence that the Miratone system discloses this claim limitation.

For example, Respondents' cited materials do not disclose "the releasably couplable deployable needle module mechanically separatably from the user holdable device proximal end and including a needle assembly including a plurality of needles" as required by the Asserted Claims. *See* '812 Patent at cl. 1. Specifically, for this limitation, Respondents cite to various documents supposedly connected to the Miratone system. *See, e.g.,* Respondents' Jul. 10, 2023 Invalidity Contentions, Ex. F5 at 14-18. But the Miratone system discloses that the sterile disposable microneedle electrode assembly and component of it are inside a reusable handpiece rather than mechanical separatable from the proximal end. *See, e.g.*, Hantash 2009 at Fig. 1; Ilooda-0004850 at Ilooda-0005573 (Miratone K082391.pdf). Further, the evidence shows that the needle module was not mechanically separatably from the proximal end of the user holdable device. Renton Dep. Tr. at 27:25-28:11; 28:22-29:21. Thus Respondents' invalidity contentions fail to provide any evidence that the Miratone system discloses this claim limitation.

For example, Miratone does not disclose "the needle assembly movable within the releasably couplable deployable needle module to extend the plurality of needles from the releasably couplable deployable needle assembly end surface while at least one electrical contact of the needle

assembly remains electrically coupled to at least one electrical contact of the user holdable device proximal end" as required by the Asserted Claims. *See* '812 Patent at cl. 1. Specifically, for this limitation, Respondents cite to a smart electrode deployment system (SEDS) with spring loaded deployment mechanism to deploy the needles. *See, e.g.,* Respondents' Jul. 10, 2023 Invalidity Contentions, Ex. F5 at 19-20. But the Miratone system does not disclose "at least one electrical contact of the needle assembly remains electrically coupled to at least one electrical contact of the user holdable device proximal end.". *See, e.g.*, Hantash 2009 at Fig. 1; Ilooda-0004850 at Ilooda-0005573 (Miratone K082391.pdf). Thus Respondents' invalidity contentions fail to provide any evidence that the Miratone system discloses this claim limitation.

For example, Respondents' cited materials do not disclose "energizing a motor coupled to the needle assembly to cause the plurality of the needles to extend a desired distance from the releasably couplable deployable needle module end surface," and "wherein the user holdable device proximal end further includes at least one embedded LED therein and further including energizing the at least one embedded LED so the at least one embedded LED illuminates the releasably couplable deployable needle module," and "wherein the needle assembly includes a translucent section and further including energizing the least one embedded LED to illuminate the plurality of needles via the needle assembly translucent section" as required by the Asserted Claims. *See* '812 Patent at cl. 5. Indeed, Respondents' invalidity contentions do not cite any evidence that the Miratone system discloses this limitation, instead just asserting that "Miratone discloses and/or renders obvious the method of claim 4. *See* claim 4. And the Miratone system does not disclose a motor or any motor that causes a plurality of extendable needles to extend a desired distance from the needle assembly end surface. *See, e.g.*, Hantash 2009 at 87-88, Alexiades at Fig.1, Ilooda-0004850 at Ilooda-0005564 (Primaeva Miratone K082391.pdf). The "retract" button would "arm the

device" and the "release" button would deploy the electrodes 6 mm at a 20-degree angle—there was no functionality that permitted control over the insertion distance. *See also* Renton Dep. Tr. at 27:1-6. To the extent this limitation is not explicitly or inherently disclosed by this reference, or rendered obvious by the references disclosed herein, it would have further been obvious given the knowledge of a person of ordinary skill in the art and/or other references disclosed and/or charted in Respondents' Invalidity Contentions, at least for the reasons set forth in these Contentions." *See, e.g.*, Respondents' Jul. 10, 2023 Invalidity Contentions, Ex. F5 at 31. Thus Respondents' invalidity contentions fail to provide any evidence that the Miratone system discloses these claim limitations.

For example, Respondents' cited materials do not disclose "energizing a motor coupled to the needle assembly to cause the plurality of the needles to extend a desired distance from the releasably couplable deployable needle module end surface" and "further comprising energizing the motor to deploy the plurality of needles to a predetermined depth and directing the signal generator to energize the plurality of needles at a predetermined intensity for a predetermined duty cycle" as required by the Asserted Claims. *See* '812 Patent at cl. 6. Specifically, for this limitation, Respondents cite Miratone for delivering "FRF energy" "through 5 microneedle electrode pairs." *See, e.g.,* Respondents' Jul. 10, 2023 Invalidity Contentions, Ex. F5 at 31-37. But the Miratone system does not disclose any motor, let alone a motor to cause "the needles to extend a desired distance from the releasably couplable deployable needle module end surface" and a motor "to deploy the plurality of needles to a predetermined depth and directing the signal generator to energize the plurality of needles at a predetermined intensity for a predetermined duty cycle." *See, e.g.* Hantash 2009 at Fig. 1; Ilooda-0004850 at Ilooda-0005573 (Miratone K082391.pdf). *See also*

Renton Dep. Tr. at 27:1-6. Thus Respondents' invalidity contentions fail to provide any evidence that the Miratone system discloses these claim limitations.

For example, Respondents' cited materials do not disclose "wherein a first electrical contact of the at least one electrical contact is electrically coupled to a first plurality of the plurality of needles and a second electrical contact of the at least one electrical contact is electrically coupled to a second, different plurality of the plurality of needles" as required by the Asserted Claims. *See* '812 Patent at cl. 10. Specifically, for this limitation, Respondents cite to various documents supposedly connected to the Miratone system. *See, e.g.,* Respondents' Jul. 10, 2023 Invalidity Contentions, Ex. F5 at 38. But Respondents' cited materials provide no information about whether a Treatment Applicator (or reuseable handpiece) or an Electrode Cartridge (or sterile disposable microneedle electrode assembly) includes a first electrical contact of the at least one electrical contact is electrically coupled to a first plurality of the plurality of needles and a second electrical contact of the at least one electrical contact is electrically coupled to a second, different plurality of the plurality of needles. *See, e.g.*, Hantash 2009 at Fig.1, Alexiades at Fig.1, Ilooda-0004850 at Ilooda-0005564 (Primaeva Miratone K082391.pdf). Thus Respondents' invalidity contentions fail to provide any evidence that the Miratone system discloses this claim limitation.

For example, Respondents' cited materials do not disclose "a releasably couplable deployable needle module" as required by the Asserted Claims. *See* '812 Patent at cl. 12. Specifically, for this limitation, Respondents cite to various documents supposedly connected to the Miratone system. *See, e.g.,* Respondents' Jul. 10, 2023 Invalidity Contentions, Ex. F5 at 40-45. But the various documents fail to show that all requirements of this claim limitation are met. *See, e.g.* Hantash 2009 at Fig. 1; Ilooda-0004850 at Ilooda-0005573 (Miratone K082391.pdf). Further, the evidence shows that the needle module was not releasably couplable. Renton Dep. Tr. at 27:25-

28:11; 28:22-29:21. Thus Respondents' invalidity contentions fail to provide any evidence that the Miratone system discloses this claim limitation.

For example, Respondents' cited materials do not disclose "the releasably couplable deployable needle module mechanically separatably from the user holdable device proximal end and including a needle assembly including a plurality of needles" as required by the Asserted Claims. *See* '812 Patent at cl. 12. Specifically, for this limitation, Respondents cite to various documents supposedly connected to the Miratone system. *See, e.g.,* Respondents' Jul. 10, 2023 Invalidity Contentions, Ex. F5 at 46-50. Further, the evidence shows that the needle module was not mechanically separatably from the proximal end of the user holdable device. Renton Dep. Tr. at 27:25-28:11; 28:22-29:21. But the Miratone system discloses that the sterile disposable microneedle electrode assembly and component of it are inside a reusable handpiece rather than mechanical separatable from the proximal end. *See, e.g.*, Hantash 2009 at Fig. 1; Ilooda-0004850 at Ilooda-0005573 (Miratone K082391.pdf). Thus Respondents' invalidity contentions fail to provide any evidence that the Miratone system discloses this claim limitation.

For example, Respondents' cited materials do not disclose "the needle assembly movable within the releasably couplable deployable needle module to extend the plurality of needles from the releasably couplable deployable needle assembly end surface while at least one electrical contact of the needle assembly remains electrically coupled to at least one electrical contact of the user holdable device proximal end" as required by the Asserted Claims. *See* '812 Patent at cl. 12. Specifically, for this limitation, Respondents cite to a smart electrode deployment system (SEDS) with spring loaded deployment mechanism to deploy the needles. *See, e.g.,* Respondents' Jul. 10, 2023 Invalidity Contentions, Ex. F5 at 51-52. But the Respondents' cited materials do not disclose "at least one electrical contact of the needle assembly remains electrically coupled to at least one

[redacted]

electrical contact of the user holdable device proximal end." *See, e.g.*, Hantash 2009 at Fig. 1; Ilooda-0004850 at Ilooda-0005573 (Miratone K082391.pdf). Further, the evidence shows that the needle module was not releasably couplable. Renton Dep. Tr. at 27:25-28:11; 28:22-29:21. Thus Respondents' invalidity contentions fail to provide any evidence that the Miratone system discloses this claim limitation.

For example, Respondents' cited materials do not disclose "further including a motor coupled to the needle assembly to extend the plurality of needles a desired distance from the releasably couplable deployable needle assembly end surface when the motor is energized with a particular signal" as required by the Asserted Claims. *See* '812 Patent at cl. 13. Specifically, for this limitation, Respondents cite to a smart electrode deployment system (SEDS) with spring loaded deployment mechanism. *See, e.g.,* Respondents' Jul. 10, 2023 Invalidity Contentions, Ex. F5 at 52-57. But Respondents' cited materials do not disclose any motor, let alone a motor coupled to the needle assembly to extend the plurality of needles a desired distance from the releasably couplable deployable needle assembly end surface when the motor is energized with a particular signal. *See, e.g.*, Hantash 2009 at Fig. 1; Ilooda-0004850 at Ilooda-0005573 (Miratone K082391.pdf). *See also* Renton Dep. Tr. at 27:1-6. Thus Respondents' invalidity contentions fail to provide any evidence that the Miratone system discloses this claim limitation.

For example, Respondents' cited materials do not disclose "wherein the user holdable device proximal end includes the motor, the motor including a drive shaft releasably couplable to the needle assembly" as required by the Asserted Claims. *See* '812 Patent at cl. 16. Specifically, for this limitation, Respondents cite to a smart electrode deployment system (SEDS) with spring loaded deployment mechanism. *See, e.g.,* Respondents' Jul. 10, 2023 Invalidity Contentions, Ex. F5 at 60-62. But the Miratone system does not disclose any motor, let alone a motor including a

drive shaft releasably couplable to the needle assembly. *See, e.g.*, Hantash 2009 at Fig. 1; Ilooda-0004850 at Ilooda-0005573 (Miratone K082391.pdf). *See also* Renton Dep. Tr. at 27:1-6. Thus Respondents' invalidity contentions fail to provide any evidence that the Miratone system discloses this claim limitation.

For example, Respondents' cited materials do not disclose "wherein the user holdable device proximal end further includes at least one embedded LED therein and the apparatus further including a photonic signal generator electrically coupled to the least one embedded LED, the at least one embedded LED capable of illuminating the needle assembly when energized" as required by the Asserted Claims. *See* '812 Patent at cl. 17. Indeed, Respondents' invalidity contentions do not cite any evidence that the Miratone system discloses this limitation, instead just asserting that "Miratone discloses and/or renders obvious the method of claim 1. *See* claim 12. To the extent this limitation is not explicitly or inherently disclosed by this reference, or rendered obvious by the references disclosed herein, it would have further been obvious given the knowledge of a person of ordinary skill in the art and/or other references disclosed and/or charted in Respondents' Invalidity Contentions, at least for the reasons set forth in these Contentions." *See, e.g.*, Respondents' Jul. 10, 2023 Invalidity Contentions, Ex. F5 at 62. Thus Respondents' invalidity contentions fail to provide any evidence that the Miratone system discloses this claim limitation.

For example, Respondents' cited materials do not disclose "wherein one of the at least one electrical contacts includes a pin that is extendable in the same direction as the plurality of needles" as required by the Asserted Claims. *See* '812 Patent at cl. 18. Indeed, Respondents' invalidity contentions do not cite any evidence that the Miratone system discloses this limitation, instead just asserting that "Miratone discloses and/or renders obvious the method of claim 1. *See* claim 12. To the extent this limitation is not explicitly or inherently disclosed by this reference, or rendered

obvious by the references disclosed herein, it would have further been obvious given the knowledge of a person of ordinary skill in the art and/or other references disclosed and/or charted in Respondents' Invalidity Contentions, at least for the reasons set forth in these Contentions." *See, e.g.*, Respondents' Jul. 10, 2023 Invalidity Contentions, Ex. F5 at 62. Thus Respondents' invalidity contentions fail to provide any evidence that the Miratone system discloses this claim limitation.

For example, Respondents' cited materials do not disclose "wherein one of the user holdable device proximal end and the needle assembly includes at least two extendable electrical contacts and the other includes at least two electrical contacts couplable to the at least two extendable electrical contacts" as required by the Asserted Claims. *See* '812 Patent at cl. 19. Indeed, Respondents' invalidity contentions do not cite any evidence that the Miratone system discloses this limitation, instead just asserting that "Miratone discloses and/or renders obvious the method of claim 1. *See* claim 12. To the extent this limitation is not explicitly or inherently disclosed by this reference, or rendered obvious by the references disclosed herein, it would have further been obvious given the knowledge of a person of ordinary skill in the art and/or other references disclosed and/or charted in Respondents' Invalidity Contentions, at least for the reasons set forth in these Contentions." *See, e.g.*, Respondents' Jul. 10, 2023 Invalidity Contentions, Ex. F5 at 63. Thus Respondents' invalidity contentions fail to provide any evidence that the Miratone system discloses this claim limitation.

Respondents attempt to gap-fill these glaring deficiencies in the Miratone system through a broad brush statement for each limitation that "[t]o the extent this limitation is not explicitly or inherently disclosed by this reference, or rendered obvious by the references disclosed herein, it would have further been obvious given the knowledge of a person of ordinary skill in the art and/or

other references disclosed and/or charted in Respondents' Invalidity Contentions, at least for the reasons set forth in these Contentions." *See, e.g.,* Respondents' Jul. 10, 2023 Invalidity Contentions, Exs. D5, E5, and F5 at *passim*. But Respondents' catch-all qualifications are inadequate to establish that any of the Asserted Claims are invalid. First, it is improper to rely on a person of skill's knowledge "as a wholesale substitute for reasoned analysis and evidentiary support, especially when dealing with a limitation missing from the prior art references specified." *Arendi S.A.R.L.*, 832 F.3d at 1362. The Miratone system's deficiencies go to critical elements of the Asserted Claims that cannot be papered over with conclusory allegations about a POSITA's background knowledge. Second, as explained in the sections discussing Respondents' other invalidity charts, the other references Respondents try to combine with the Miratone system each themselves lack various limitations of the Asserted Claims.

Thus, Respondents have not established a *prima facie* case of anticipation or obviousness.

f. Exhibits E6 and F6 ("ScarLet")[30]

In Exhibits E6, and F6, Respondents argue that

> The ScarLet product manufactured by ViOL, Korea ("ScarLet") qualifies as prior art under at least AIA 35 U.S.C. § 102(a)(1) because it is a product that was in public used, on sale, or otherwise available to the public before the effective filing date of the claimed invention to which the ['774 and '836 Patents] could claim priority.

See Respondents' Jul. 10, 2023 Invalidity Contentions, Exs. E6, and F6. Respondents then contend that:

> The asserted claims of the ['774 and '812 Patents] are invalid under AIA 35 U.S.C. § 102(a)(1) as anticipated by ScarLet, and/or are invalid under AIA 35 U.S.C. §

[30] Respondents did not identify the ScarLet system as part of any invalidity ground for the '536 Patent in in its final invalidity contentions. Respondents' Jul. 10, 2023 Invalidity Contentions, App. 5. Thus, Respondents withdrew any prior art invalidity ground based whole or in part on the ScarLet system. To the extent Respondents are later permitted to rely on ScarLet with respect to the '536 Patent, Serendia reserves the right to respond.

[redacted]

> 103 as obvious in view of ScarLet alone, or in combination with one or more other references identified herein and/or in Respondents' Invalidity Contentions, at least based on Respondents' understanding of Complainant's application of the asserted claims in an effort to show infringement.

Id.

As an initial matter, Respondents are wrong that the ScarLet system qualifies as prior art. As discussed above, the '536, '774, and '812 Patents are entitled to a priority date before March 16, 2013, meaning pre-AIA framework applies when assessing whether a reference or system is prior art. Specifically, the '536 patent claims priority to U.S. provisional application no. 61/449080, filed on March 3, 2011. The Asserted Claims are entitled to an effective U.S. filing date of March 3, 2011.

Under pre-AIA 35 U.S.C. 102, a prior art system has to be "known or used by others in this country … before the invention thereof by the applicant for patent" (pre-AIA 102(a)), or "… in public use or on sale in this country, more than one year prior to the date of the application for patent in the United States" (pre-AIA 102(b)). Respondents have expressly chosen to rely on the ScarLet system itself, rather than published information about this system that might qualify as prior art on other bases, and thus must establish that the system itself meets the requirements to constitute prior art under U.S. law. However, Respondents have not shown that the ScarLet system was "known or used by others in this country" prior to either the U.S. filing date of March 3, 2011. Nor have Respondents shown that the ScarLet system was "in public use or on sale in this country" prior to March 3, 2010 (one year prior to the March 3, 2011 date of the application for patent in the United States). Indeed, all of the disclosure Respondents cite in their invalidity contentions related to the ScarLet system either: 1) provides no indication as to when and where the system was used or sold; or 2) relates to purported use of the ScarLet system in ***Korea***, not the United

States.[31] In fact, Respondents' invalidity contentions do not even contend that the ScarLet system qualifies as prior art under pre-AIA 35 U.S.C. 102, and instead rely entirely on Respondents' erroneous contention that the '536, '774, and '812 Patents should be evaluated under the post-AIA framework. For this reason alone, Respondents have failed to present a *prima facie* case of anticipation and/or obviousness in view of the ScarLet system.

Respondents have not shown that any ScarLet system was in public use practicing the asserted method claims or that such a system in public use or on sale, or otherwise available to the public, was configured to practice the asserted system claims. Regardless, even if the ScarLet system did qualify as prior art to the '774 and '812 Patents (and it does not), the ScarLet system does not anticipate or render obvious (either alone or in combination) the Asserted Claims the '536, '774, and '812 Patents.

For example, Respondents' cited materials do not disclose "a signal generator electrically coupled to the plurality of extended needles to produce pulsed radio frequency signals across the plurality of needles to affect dermatological tissue near the plurality of needles" as required by the Asserted Claims. *See* '774 Patent at cl. 11. Indeed, Respondents do not even chart claim elements for claims 11 or 12 of the '774 Patent. Respondents' Jul. 10, 2023 Invalidity Contentions, Ex. E6 at 2-13. Since claims 13 and 14 depend on those claims, that is enough to show that claims 13 and

---

[31] *See* Respondents' Jul. 10, 2023 Invalidity Contentions, Exs. F6, and E6 (citing Ilooda-0005923 (Shim 2010_DKU Thesis 2010.12.01), Ilooda-0006075 (Scarlet intro), Ilooda-0006078 (#13_(Eng)_Shim 2010_DKU Thesis Dec 1 2010_Translated_Certified), Ilooda-0006210 (5-1. 스칼렛 최초허가), Ilooda-0006533 (Naver Blog The H Jan 10 2011), Ilooda-0006719 (#19-1_Naver Blog The H Jan 10 2011_Translated_Certified), Ilooda-0006770 (#18_D&PS Monthly Sept 2010_Translated_Certified), Ilooda-0006827 (D&PS MonthlySeptember 2010), Ilooda-0008178, Ilooda-0009318, Ilooda-0009319, Ilooda-0009322, Ilooda-0009339, Ilooda-0009669, Ilooda-0009673, Ilooda-0009678, Ilooda-0009791, Ilooda-0009795, Ilooda-0010031, Ilooda-0010042, SERENDIA-00017276, SERENDIA-00017306, SERENDIA-00031579, SERENDIA-00033637, SERENDIA-00033705, SERENDIA-00036286, SERENDIA-00052450, SERENDIA-00061017, SERENDIA-00066746, SERENDIA-00075908, and SERENDIA-00081664).

14 are not disclosed in ScarLet. Even if Respondents did point to documents purportedly associated with the ScarLet, such as a master's thesis and slide deck, they would not disclose this limitation of claim 11 of the '774 Patent. Those documents do not disclose "pulsed radio frequency signals." *See, e.g.*, Ilooda-0006719, Ilooda-0006770, Ilooda-0006078; SERENDIA-00017306. Thus Respondents' invalidity contentions fail to provide any evidence that the ScarLet system discloses this claim limitation.

For example, Respondents' cited materials do not disclose "communicating electrical signals from the user holdable device proximal end to the needle assembly via the electrical contacts" as required by the Asserted Claims. *See* '812 Patent at cl. 1. Specifically, for this limitation, Respondents cite to a variety of documents, such as a master's thesis and slide deck. *See, e.g.,* Respondents' Jul. 10, 2023 Invalidity Contentions, Ex. F6 at 33-39. But none of the pictures or documents Respondents cite as related to the ScarLet system disclose the information about electrical contacts between the proximal end and the deployable needle assembly, *e.g.*, there is no picture of an electrical contact on any component of the ScarLet system, it is not certain how components described in one of the ScarLet system documents correlate to another ScarLet system document. *See, e.g.*, Ilooda-0006719, Ilooda-0006770, Ilooda-0006078. Thus Respondents' invalidity contentions fail to provide any evidence that the ScarLet system discloses this claim limitation.

For example, Respondents' cited materials do not disclose "energizing a motor coupled to the needle assembly to cause the plurality of the needles to extend a desired distance from the releasably couplable deployable needle module end surface," "further comprising energizing the plurality of needles via a signal generator electrically coupled to the user holdable device proximal end," "wherein the user holdable device proximal end further includes at least one embedded LED

therein and further including energizing the at least one embedded LED so the at least one embedded LED illuminates the releasably couplable deployable needle module," and "wherein the needle assembly includes a translucent section and further including energizing the least one embedded LED to illuminate the plurality of needles via the needle assembly translucent section" as required by the Asserted Claims. *See* '812 Patent at cl. 5. Respondents' invalidity contentions do not cite any evidence that the ScarLet system discloses the limitations upon which claim 5 relies upon. Also, Respondents cite to a variety of documents, such as a master's thesis and slide deck, for claim 5 itself. *See, e.g.,* Respondents' Jul. 10, 2023 Invalidity Contentions, Ex. F6 at 40-43. But none of the documents Respondents cite as related to the ScarLet system disclose the needle assembly including a translucent section, as compared to the needle module, and the plurality of needles illuminated by an embedded LED. Thus Respondents' invalidity contentions fail to provide any evidence that the ScarLet system discloses these claim limitations.

For example, Respondents' cited materials do not disclose any limitation of claim 2 and 3 upon which claim 6 of the '812 Patent depends as Respondents failed to chart claims 2 and 3 of the '812 Patent with respect to the ScarLet system.

For example, Respondents' cited materials do not disclose "wherein a first electrical contact of the at least one electrical contact is electrically coupled to a first plurality of the plurality of needles and a second electrical contact of the at least one electrical contact is electrically coupled to a second, different plurality of the plurality of needles" as required by the Asserted Claims. *See* '812 Patent at cl. 10. Specifically, for this limitation, Respondents cite to a variety of documents, such as a master's thesis and slide deck. *See, e.g.,* Respondents' Jul. 10, 2023 Invalidity Contentions, Ex. F6 at 58-64. But none of the pictures or documents Respondents cite as related to the ScarLet system disclose two electrical contacts electrically connected to different sets of plurality

[redacted]

of needles. Thus Respondents' invalidity contentions fail to provide any evidence that the ScarLet system discloses this claim limitation.

For example, Respondents' cited materials do not disclose "the needle assembly movable within the releasably couplable deployable needle module to extend the plurality of needles from the releasably couplable deployable needle assembly end surface while at least one electrical contact of the needle assembly remains electrically coupled to at least one electrical contact of the user holdable device proximal end" as required by the Asserted Claims. *See* '812 Patent at cl. 12. Specifically, for this limitation, Respondents cite to a variety of documents, such as a master's thesis and slide deck. *See, e.g.,* Respondents' Jul. 10, 2023 Invalidity Contentions, Ex. F6 at 85-92. But none of the pictures or documents Respondents cite as related to the ScarLet system disclose about at least one electrical contact of a needle assembly that remains electrically coupled to at least one electrical contact of the user holdable device proximal end. *See, e.g.*, Ilooda-0006719, Ilooda-0006770, Ilooda-0006078. Thus Respondents' invalidity contentions fail to provide any evidence that the ScarLet system discloses this claim limitation.

For example, Respondents' cited materials do not disclose "further including a signal generator electrically coupled to the user holdable device proximal end to energize the plurality of needles" as required by the Asserted Claims. *See* '812 Patent at cl. 14. Specifically, for this limitation, Respondents cite to a variety of documents, such as a master's thesis and slide deck. *See, e.g.,* Respondents' Jul. 10, 2023 Invalidity Contentions, Ex. F6 at 101-110. But none of the pictures or documents Respondents cite as related to the ScarLet system disclose the information about the necessary electrical connections to disclose this limitation, e.g., a signal generator may directly connect to the plurality of needles through a wire without any electrical connection to a user holdable device proximal end. *See, e.g.*, Ilooda-0006719, Ilooda-0006770, Ilooda-0006078.

Thus Respondents' invalidity contentions fail to provide any evidence that the ScarLet system discloses this claim limitation.

For example, Respondents' cited materials do not disclose "wherein the user holdable device proximal end includes the motor, the motor including a drive shaft releasably couplable to the needle assembly" as required by the Asserted Claims. *See* '812 Patent at cl. 16. Specifically, for this limitation, Respondents cite a master's thesis. *See, e.g.,* Respondents' Jul. 10, 2023 Invalidity Contentions, Ex. F6 at 110. But none of the documents Respondents cite as related to the ScarLet system disclose a location of the motor, whether the motor includes a drive shaft, and if a drive shaft exists, whether it is releasably couplable to a deployable needle assembly. *See, e.g.*, Ilooda-0006719, Ilooda-0006770, Ilooda-0006078. Thus Respondents' invalidity contentions fail to provide any evidence that the ScarLet system discloses this claim limitation.

For example, Respondents' cited materials do not disclose "wherein the user holdable device proximal end further includes at least one embedded LED therein and the apparatus further including a photonic signal generator electrically coupled to the least one embedded LED, the at least one embedded LED capable of illuminating the needle assembly when energized" as required by the Asserted Claims. *See* '812 Patent at cl. 17. Specifically, for this limitation, Respondents cite to a variety of documents, such as a video. *See, e.g.,* Respondents' Jul. 10, 2023 Invalidity Contentions, Ex. F6 at 110-114. But none of the documents Respondents cite as related to the ScarLet system disclose a photonic signal generator, whether there is an embedded LED in the proximal end, or whether an embedded LED illuminates a needle assembly when energized. Thus Respondents' invalidity contentions fail to provide any evidence that the ScarLet system discloses this claim limitation.

Respondents attempt to gap-fill these glaring deficiencies in the ScarLet system through a broad brush statement for each limitation that "[t]o the extent this limitation is not explicitly or inherently disclosed by this reference, or rendered obvious by the references disclosed herein, it would have further been obvious given the knowledge of a person of ordinary skill in the art and/or other references disclosed and/or charted in Respondents' Invalidity Contentions." *See, e.g.,* Respondents' Jul. 10, 2023 Invalidity Contentions, Exs. D6, E6, and F6 at *passim*. But Respondents' catch-all qualifications are inadequate to establish that any of the Asserted Claims are invalid. First, it is improper to rely on a person of skill's knowledge "as a wholesale substitute for reasoned analysis and evidentiary support, especially when dealing with a limitation missing from the prior art references specified." *Arendi S.A.R.L.*, 832 F.3d at 1362. the ScarLet system's deficiencies go to critical elements of the Asserted Claims that cannot be papered over with conclusory allegations about a POSITA's background knowledge. Second, as explained in the sections discussing Respondents' other invalidity charts, the other references Respondents try to combine with the ScarLet system each themselves lack various limitations of the Asserted Claims. Finally, once again, Respondents have failed to present evidence that the ScarLet system qualifies as system prior art.

Thus, Respondents have not established a *prima facie* case of anticipation or obviousness.

g. Exhibits D7, E7, and F7 ("Mulholland")

In Exhibits D7, E7, and F7, Respondents argue that "United States Patent No. 10,799,285 ("Mulholland") qualifies as prior art under at least AIA 35 U.S.C. § 102(a)(2) because its patent application was filed before the alleged effective filing date of the ['536, '774, and '812 Patents] and named another inventor." *See* Respondents' Jul. 10, 2023 Invalidity Contentions, Exs. D7, E7, and F7. Respondents further argue that, "[t]o the extent that the ['536, '774, and '812 Patents are] subject to pre-AIA law, Mulholland qualifies as prior art under at least 35 U.S.C. § 102(e)

(pre-AIA) because its patent application was filed before the alleged effective filing date of the ['536, '774, and '812 Patents] and named another inventor." *Id*. Respondents then contend that:

> The asserted claims of the ['536, '774, and '812 Patents] are invalid under 35 U.S.C. § 102 (AIA or pre-AIA) as anticipated by Mulholland, and/or are invalid under 35 U.S.C. § 103 (AIA or pre-AIA) as obvious in view of Mulholland alone, or in combination with one or more other references identified herein and/or in Respondents' Invalidity Contentions, at least based on Respondents' understanding of Complainant's application of the asserted claims in an effort to show infringement.

Id..

First, U.S. Pat. No. 7,618,429, which shares similarities with Mulholland, was considered during prosecution of the '536, '774, and '812 Patents, and as the Federal Circuit has recognized, "it may be harder to meet the clear and convincing burden when the invalidity contention is based upon the same argument on the same reference that the PTO already considered." *Sciele Pharma Inc.*, 684 F.3d at 1260.

As discussed below, Mullholand does not anticipate or render obvious (either alone or in combination) the Asserted Claims of the '536, '774, and '812 Patents.

For example, Mulholland does not disclose "placing a user holdable device releasably couplable deployable needle assembly end surface on or near dermatological tissue to be treated, the holdable device including a proximal end and the releasably couplable deployable needle assembly" as required by the Asserted Claims. *See* '536 Patent at cl. 1. Specifically, for this limitation, Respondents appear to cite 12b as being the needle assembly and 12a as the proximal end. *See, e.g.,* Respondents' Jul. 10, 2023 Invalidity Contentions, Ex. D7 at 3-8. But Mulholland only provides that a hand-held portion 12a that houses a motor and oscillating means are in "mechanical communication." *See, e.g.* Mulholland at 6:65-74. Mulholland does not disclose a "releasably couplable deployable needle assembly." Thus Respondents' invalidity contentions fail to provide any evidence that Mulholland discloses this claim limitation.

For example, Mulholland does not disclose "the deployable needle assembly mechanically separatably from the proximal end and including a plurality of needles extendable from the deployable needle assembly end surface" as required by the Asserted Claims. *See* '536 Patent at cl. 1. Specifically, for this limitation, Respondents appear to cite 12b as the needle assembly and 12a as the proximal end. *See, e.g.,* Respondents' Jul. 10, 2023 Invalidity Contentions, Ex. D7 at 8-13. But Mulholland only provides that a hand-held portion 12a that houses a motor and oscillating means are in "mechanical communication." *See, e.g.*, Mulholland at 6:65-74. Mulholland does not disclose a deployable needle assembly that is mechanically separable from the proximal end. Thus Respondents' invalidity contentions fail to provide any evidence that Mulholland discloses this claim limitation.

For example, Mulholland does not disclose "one of the proximal end and the deployable needle assembly including at least one electrical conductor and the other including at least one restorably deflectable electrical contact couplable to the one of the proximal end and the deployable needle assembly at least one electrical conductor" as required by the Asserted Claims. *See* '536 Patent at cl. 1. Specifically, for this limitation, Respondents cite Mulholland for having needle array 54 connected electrically to an RF generator through harness 53 in Fig. 5. *See, e.g.,* Respondents' Jul. 10, 2023 Invalidity Contentions, Ex. D7 at 13-17. But Mulholland provides no information about the details of the electrical connections. *See, e.g.*, Mulholland at 7:32-8:6, Fig. 5, 6. Mulholland does not disclose the claimed electrical contacts. Thus Respondents' invalidity contentions fail to provide any evidence that Mulholland discloses this claim limitation.

For example, Mulholland does not disclose "energizing a motor coupled to a plurality of extendable needles to cause a plurality of the extendable needles to extend a desired distance from the needle assembly end surface" as required by the Asserted Claims. *See* '536 Patent at cl. 1.

Specifically, for this limitation, Respondents cite Mulholland for a motor for reciprocation with a range of reciprocation depths. *See, e.g.,* Respondents' Jul. 10, 2023 Invalidity Contentions, Ex. D7 at 21-23. But Mulholland does not disclose that the motor causes an extension of a desired distance, but rather a needle tip protector 12e "serv[es] as the needle depth adjustment means." *See, e.g.*, Mulholland at 7:20-24. Thus Respondents' invalidity contentions fail to provide any evidence that Mulholland discloses this claim limitation.

For example, Mulholland does not disclose "wherein the proximal end further includes at least one embedded LED therein and further including energizing the LED when the signal generator is energized, the at least one embedded LED illuminating the deployable needle assembly when energized" as required by the Asserted Claims. *See* '536 Patent at cl. 4. Indeed, Respondents' invalidity contentions do not cite any evidence that Mulholland discloses this limitation, instead just asserting, "To the extent this limitation is not explicitly or inherently disclosed by this reference, or rendered obvious by the references disclosed herein, it would have further been obvious given the knowledge of a person of ordinary skill in the art and/or other references disclosed and/or charted in Respondents' Invalidity Contentions, at least for the reasons set forth in these Contentions." *See, e.g*., Respondents' Jul. 10, 2023, Ex. D7 at 26. Thus Respondents' invalidity contentions fail to provide any evidence that Mulholland discloses this claim limitation.

For example, Mulholland does not disclose "wherein the releasably couplable deployable needle assembly includes a translucent section to communicate illumination from the least one embedded LED to the plurality of extendable needles" as required by the Asserted Claims. *See* '536 Patent at cl. 5. Indeed, Respondents' invalidity contentions do not cite any evidence that Mulholland discloses this limitation, instead just asserting, "To the extent this limitation is not explicitly or inherently disclosed by this reference, or rendered obvious by the references disclosed

herein, it would have further been obvious given the knowledge of a person of ordinary skill in the art and/or other references disclosed and/or charted in Respondents' Invalidity Contentions, at least for the reasons set forth in these Contentions." *See, e.g.*, Respondents' Jul. 10, 2023, Ex. D7 at 27. Thus Respondents' invalidity contentions fail to provide any evidence Mulholland discloses this claim limitation.

For example, Mulholland does not disclose "further comprising deploying the plurality of extendable needles to a predetermined depth and employing the signal generator to energize the plurality of extended needles to a predetermined intensity for a predetermined duty cycle" as required by the Asserted Claims. *See* '536 Patent at cl. 9. Specifically, for this limitation, Respondents cite Mulholland for a reciprocating rate and dwell time of and that the amount of thermal or RF energy can be controlled by the dwell time. *See, e.g.,* Respondents' Jul. 10, 2023 Invalidity Contentions, Ex. D7 at 27-30. But there is no indication that a dwell time is equivalent to a duty cycle as a duty cycle deals with something being on or off or increasing or decreasing, but here there is no indication that the thermal or RF energy does any of those things. *See, e.g.*, Mulholland at 4:20-30. Thus Respondents' invalidity contentions fail to provide any evidence that Mulholland discloses this claim limitation.

For example, Mulholland does not disclose "a user holdable device including a proximal end and a releasably couplable deployable needle assembly" as required by the Asserted Claims. *See* '536 Patent at cl. 11. Specifically, for this limitation, Respondents appear to cite 12b as the needle assembly and 12a as the proximal end. *See, e.g.,* Respondents' Jul. 10, 2023 Invalidity Contentions, Ex. D7 at 32-35. But Mulholland only provides that a hand-held portion 12a that houses a motor and oscillating means are in "mechanical communication." *See, e.g.* Mulholland at 6:65-74. Mulholland does not disclose a "releasably couplable deployable needle assembly."

Thus Respondents' invalidity contentions fail to provide any evidence that Mulholland discloses this claim limitation.

For example, Mulholland does not disclose "the deployable needle assembly mechanically separatably from the proximal end and including a plurality of extendable needles, a plurality of the extendable needles extendable from a deployable needle assembly end surface" as required by the Asserted Claims. *See* '536 Patent at cl. 11. Specifically, for this limitation, Respondents appear to cite 12b as the needle assembly and 12a as the proximal end. *See, e.g.,* Respondents' Jul. 10, 2023 Invalidity Contentions, Ex. D7 at 35-37. But Mulholland only provides that a hand-held portion 12a that houses a motor and oscillating means are in "mechanical communication." *See, e.g.*, Mulholland at 6:65-74. Mulholland does not disclose a deployable needle assembly that is mechanically separable from the proximal end. Thus Respondents' invalidity contentions fail to provide any evidence that Mulholland discloses this claim limitation.

For example, Mulholland does not disclose "one of the proximal end and the deployable needle assembly including at least one electrical conductor and the other including at least one restorably deflectable electrical contact couplable to the one of the proximal end and the deployable needle assembly at least one electrical conductor" as required by the Asserted Claims. *See* '536 Patent at cl. 11. Specifically, for this limitation, Respondents cite Mulholland for having needle array 54 connected electrically to an RF generator through harness 53 in Fig. 5. *See, e.g.,* Respondents' Jul. 10, 2023 Invalidity Contentions, Ex. D7 at 41-44. But Mulholland provides no information about the details of the electrical connections. *See, e.g.*, Mulholland at 7:32-8:6, Fig. 5, 6. Mulholland does not disclose the claimed electrical contacts. Thus Respondents' invalidity contentions fail to provide any evidence that Mulholland discloses this claim limitation.

For example, Mulholland does not disclose "a motor coupled to a plurality of extendable needles that causes the plurality of extendable needles to extend a desired distance from the needle assembly end surface when the motor is energized with a particular signal" as required by the Asserted Claims. *See* '536 Patent at cl. 11. Specifically, for this limitation, Respondents cite Mulholland for a motor for reciprocation with a range of reciprocation depths. *See, e.g.,* Respondents' Jul. 10, 2023 Invalidity Contentions, Ex. D7 at 44-46. But Mulholland does not disclose that the motor causes an extension of a desired distance, but rather a needle tip protector 12e "serv[es] as the needle depth adjustment means." *See, e.g.*, Mulholland at 7:20-24. Thus Respondents' invalidity contentions fail to provide any evidence that Mulholland discloses this claim limitation.

For example, Mulholland does not disclose "wherein the proximal end includes the needle deploying motor, the motor including a draft shaft releasably couplable to the deployable needle assembly" as required by the Asserted Claims. *See* '536 Patent at cl. 13. Specifically, for this limitation, Respondents cite Mulholland for general reciprocation of needles from a motor. *See, e.g.,* Respondents' Jul. 10, 2023 Invalidity Contentions, Ex. D7 at 49-51. But Mulholland provides no information that the motor includes a drive shaft. *See, e.g.*, Mulholland at 4:45-46. Thus Respondents' invalidity contentions fail to provide any evidence that Mulholland discloses this claim limitation.

For example, Mulholland does not disclose "the wherein at least one restorably deflectable electrical contact includes a depressible pin" as required by the Asserted Claims. *See* '536 Patent at cl. 16. Indeed, Respondents' invalidity contentions do not cite any evidence that Mulholland discloses this limitation, instead just asserting, "To the extent this limitation is not explicitly or inherently disclosed by this reference, or rendered obvious by the references disclosed herein, it would have further been obvious given the knowledge of a person of ordinary skill in the art and/or

other references disclosed and/or charted in Respondents' Invalidity Contentions, at least for the reasons set forth in these Contentions.." *See, e.g.*, Respondents' Jul. 10, 2023, Ex. D7 at 52. Thus Respondents' invalidity contentions fail to provide any evidence that Mulholland discloses this claim limitation.

For example, Mulholland does not disclose "wherein a first deflectable electrical contact is coupled to a first plurality of the plurality of extendable needles and a second deflectable electrical contact is coupled to a second, different plurality of the plurality of extendable needles" as required by the Asserted Claims. *See* '536 Patent at cl. 17. Indeed, Respondents' invalidity contentions do not cite any evidence that Mulholland discloses this limitation, instead just asserting, "To the extent this limitation is not explicitly or inherently disclosed by this reference, or rendered obvious by the references disclosed herein, it would have further been obvious given the knowledge of a person of ordinary skill in the art and/or other references disclosed and/or charted in Respondents' Invalidity Contentions, at least for the reasons set forth in these Contentions.." *See, e.g.*, Respondents' Jul. 10, 2023, Ex. D7 at 52. Thus Respondents' invalidity contentions fail to provide any evidence that Mulholland discloses this claim limitation.

For example, Mulholland does not disclose "further including a mechanism for causing the plurality of the extendable needles to extend a desired distance from the end surface" as required by the Asserted Claims. *See* '774 Patent at cl. 13. Specifically, for this limitation, Respondents cite Mulholland for the general parts of the embodiment in Fig. 2A-B. *See, e.g.,* Respondents' Jul. 10, 2023 Invalidity Contentions, Ex. E7 at 17-20. But Mulholland discloses only needle tip protector 12e and no other part "as the needle depth adjustment means for obtaining the desired depth of needle penetration of said needle tips to the skin area being treated." *See, e.g.*, Mulholland at

7:20-24. Thus Respondents' invalidity contentions fail to provide any evidence that Mulholland discloses this claim limitation.

For example, Mulholland does not disclose "a motor coupled to the plurality of extendable needles that may be directed to cause the plurality of the extendable needles to extend a desired distance from the end surface" as required by the Asserted Claims. *See* '774 Patent at cl. 14. Specifically, for this limitation, Respondents cite Mulholland for a motor for reciprocation with a range of reciprocation depths. *See, e.g.,* Respondents' Jul. 10, 2023 Invalidity Contentions, Ex. E7 at 20-22. But Mulholland does not disclose that the motor causes an extension of a desired distance, but rather a needle tip protector 12e "serv[es] as the needle depth adjustment means." *See, e.g.*, Mulholland at 7:20-24. Thus Respondents' invalidity contentions fail to provide any evidence that Mulholland discloses this claim limitation.

For example, Mulholland does not disclose "placing a user holdable device releasably couplable deployable needle module end surface on or near dermatological tissue to be treated, the user holdable device including a proximal end and the releasably couplable deployable needle module" as required by the Asserted Claims. *See* '812 Patent at cl. 1. Specifically, for this limitation, Respondents appear to cite 12b as the needle assembly and 12a as the proximal end. *See, e.g.,* Respondents' Jul. 10, 2023 Invalidity Contentions, Ex. F7 at 3-14. But Mulholland only provides that a hand-held portion 12a that houses a motor and oscillating means are in "mechanical communication." *See, e.g.* Mulholland at 6:65-74. Mulholland does not disclose a "releasably couplable deployable needle module." Thus Respondents' invalidity contentions fail to provide any evidence that Mulholland discloses this claim limitation.

For example, Mulholland does not disclose "the releasably couplable deployable needle module mechanically separatably from the user holdable device proximal end and including a

needle assembly including a plurality of needles" as re-quired by the Asserted Claims. *See* '812 Patent at cl. 1. Specifically, for this limitation, Respondents appear to cite 12b as the needle assembly and 12a as the proximal end. *See, e.g.,* Respondents' Jul. 10, 2023 Invalidity Contentions, Ex. F7 at 14-18. But Mulholland only provides that a hand-held portion 12a that houses a motor and oscillating means are in "mechanical communication." *See, e.g.,* Mulholland at 6:65-74. Mulholland does not disclose a deployable needle module that is mechanically separable from the proximal end. Thus Respondents' invalidity contentions fail to provide any evidence that Mulholland discloses this claim limitation.

For example, Mulholland does not disclose "the needle assembly movable within the releasably couplable deployable needle module to extend the plurality of needles from the releasably couplable deployable needle assembly end surface while at least one electrical contact of the needle assembly remains electrically coupled to at least one electrical contact of the user holdable device proximal end" as required by the Asserted Claims. *See* '812 Patent at cl. 1. Specifically, for this limitation, Respondents cite across embodiments, such as in Fig. 5, 6, and 2A-B. *See, e.g.,* Respondents' Jul. 10, 2023 Invalidity Contentions, Ex. F7 at 18-23. But Mulholland does not disclose a needle assembly movable within a releasably couplable deployable needle module. *See, e.g.*, Mulholland at 7:32-54. Thus Respondents' invalidity contentions fail to provide any evidence that Mulholland discloses this claim limitation.

For example, Mulholland does not disclose "energizing a motor coupled to the needle assembly to cause the plurality of the needles to extend a desired distance from the releasably couplable deployable needle module end surface," "further comprising energizing the plurality of needles via a signal generator electrically coupled to the user holdable device proximal end," "wherein the user holdable device proximal end further includes at least one embedded LED therein and

further including energizing the at least one embedded LED so the at least one embedded LED illuminates the releasably couplable deployable needle module," and "wherein the needle assembly includes a translucent section and further including energizing the least one embedded LED to illuminate the plurality of needles via the needle assembly translucent section" as required by the Asserted Claims. *See* '812 Patent at cl. 5. As discussed above, Mulholland discloses only needle tip protector 12e and no other part "as the needle depth adjustment means for obtaining the desired depth of needle penetration of said needle tips to the skin area being treated." *See, e.g.*, Mulholland at 7:20-24. In addition, as to the LED-related limitations, Respondents' invalidity contentions do not cite any evidence that Mulholland discloses these limitations, instead just asserting, "To the extent this limitation is not explicitly or inherently disclosed by this reference, or rendered obvious by the references disclosed herein, it would have further been obvious given the knowledge of a person of ordinary skill in the art and/or other references disclosed and/or charted in Respondents' Invalidity Contentions, at least for the reasons set forth in these Contentions." *See, e.g.*, Respondents' Jul. 10, 2023 Invalidity Contentions, Ex. F7 at 31-32. Thus Respondents' invalidity contentions fail to provide any evidence that Mulholland discloses these claim limitations.

For example, Mulholland does not disclose "energizing a motor coupled to the needle assembly to cause the plurality of the needles to extend a desired distance from the releasably couplable deployable needle module end surface" and "further comprising energizing the motor to deploy the plurality of needles to a predetermined depth and directing the signal generator to energize the plurality of needles at a predetermined intensity for a predetermined duty cycle" as required by the Asserted Claims. *See* '812 Patent at cl. 6. Specifically, for this limitation, Respondents cite Mulholland for a motor for reciprocation with a range of reciprocation depths. *See, e.g.,* Respondents' Jul. 10, 2023 Invalidity Contentions, Ex. F7 at 32-36. But Mulholland does not

[redacted]

disclose that the motor causes an extension of a desired distance, but rather a needle tip protector 12e "serv[es] as the needle depth adjustment means." *See, e.g.*, Mulholland at 7:20-24. Respondents cite Mulholland for a reciprocating rate and dwell time of and that the amount of thermal or RF energy can be controlled by the dwell time. *See, e.g.,* Respondents' Jul. 10, 2023 Invalidity Contentions, Ex. F7 at 35. But there is no indication that a dwell time is equivalent to a duty cycle as a duty cycle deals with something being on or off or increasing or decreasing, but here there is no indication that the thermal or RF energy does any of those things. *See, e.g.*, Mulholland at 4:20-30. Thus Respondents' invalidity contentions fail to provide any evidence that Mulholland discloses this claim limitation. Thus Respondents' invalidity contentions fail to provide any evidence that Mulholland discloses these claim limitations.

For example, Mulholland does not disclose "wherein a first electrical contact of the at least one electrical contact is electrically coupled to a first plurality of the plurality of needles and a second electrical contact of the at least one electrical contact is electrically coupled to a second, different plurality of the plurality of needles" as required by the Asserted Claims. *See* '812 Patent at cl. 10. Indeed, Respondents' invalidity contentions do not cite any evidence that Mulholland discloses this limitation, instead just asserting, "To the extent this limitation is not explicitly or inherently disclosed by this reference, or rendered obvious by the references disclosed herein, it would have further been obvious given the knowledge of a person of ordinary skill in the art and/or other references disclosed and/or charted in Respondents' Invalidity Contentions, at least for the reasons set forth in these Contentions.." *See, e.g*., Respondents' Jul. 10, 2023 Invalidity Contentions, Ex. F7 at 36. Thus Respondents' invalidity contentions fail to provide any evidence that Mulholland discloses this claim limitation.

For example, Mulholland does not disclose "a releasably couplable deployable needle module" as required by the Asserted Claims. *See* '812 Patent at cl. 12. Specifically, for this limitation, Respondents appear to cite 12b as the needle assembly and 12a as the proximal end. *See, e.g.,* Respondents' Jul. 10, 2023 Invalidity Contentions, Ex. F7 at 37-44. But Mulholland only provides that a hand-held portion 12a that houses a motor and oscillating means are in "mechanical communication." *See, e.g.* Mulholland at 6:65-74. Mulholland does not disclose a "releasably couplable deployable needle module." Thus Respondents' invalidity contentions fail to provide any evidence that Mulholland discloses this claim limitation.

For example, Mulholland does not disclose "the releasably couplable deployable needle module mechanically separatably from the user holdable device proximal end and including a needle assembly including a plurality of needles" as required by the Asserted Claims. *See* '812 Patent at cl. 1. Specifically, for this limitation, Respondents appear to cite 12b as the needle assembly and 12a as the proximal end. *See, e.g.,* Respondents' Jul. 10, 2023 Invalidity Contentions, Ex. F7 at 44-48. But Mulholland only provides that a hand-held portion 12a that houses a motor and oscillating means are in "mechanical communication." *See, e.g.,* Mulholland at 6:65-74. Mulholland does not disclose a deployable needle module that is mechanically separable from the proximal end. Thus Respondents' invalidity contentions fail to provide any evidence that Mulholland discloses this claim limitation.

For example, Mullholand does not disclose "the needle assembly movable within the releasably couplable deployable needle module to extend the plurality of needles from the releasably couplable deployable needle assembly end surface while at least one electrical contact of the needle assembly remains electrically coupled to at least one electrical contact of the user holdable device proximal end" as required by the Asserted Claims. *See* '812 Patent at cl. 12. Specifically,

[redacted]

for this limitation, Respondents cite reciprocating of an elongated needle portion 12b and a sheath 12c of the needle-based device 12. *See, e.g.,* Respondents' Jul. 10, 2023 Invalidity Contentions, Ex. F7 at 48-53. But Mulholland provides no information about the details of the electrical connections. *See, e.g.*, Mulholland at 7:32-8:6, Fig. 5, 6. Mulholland does not disclose a needle assembly movable within a releasably couplable deployable needle module. Mulholland also does not disclose the plurality of needles in a partially retracted state are already beyond any releasably couplable deployable needle assembly end surface. *See, e.g.*, Mulholland at Fig. 4A ("partially retracted position"), 4B ("extended position"). Thus Respondents' invalidity contentions fail to provide any evidence that Mulholland discloses this claim limitation.

For example, Mulholland does not disclose "further including a motor coupled to the needle assembly to extend the plurality of needles a desired distance from the releasably couplable deployable needle assembly end surface when the motor is energized with a particular signal" as required by the Asserted Claims. *See* '812 Patent at cl. 13. Specifically, for this limitation, Respondents cite Mulholland for a motor for reciprocation with a range of reciprocation depths. *See, e.g.,* Respondents' Jul. 10, 2023 Invalidity Contentions, Ex. F7 at 53-55. But Mulholland does not disclose that the motor causes an extension of a desired distance, but rather a needle tip protector 12e "serv[es] as the needle depth adjustment means." *See, e.g.*, Mulholland at 7:20-24. Mulholland also does not provide that the motor is energized with a particular signal. Thus Respondents' invalidity contentions fail to provide any evidence that Mulholland discloses this claim limitation.

For example, Mulholland does not disclose "wherein the user holdable device proximal end includes the motor, the motor including a drive shaft releasably couplable to the needle assembly" as required by the Asserted Claims. *See* '812 Patent at cl. 16. Specifically, for this limitation, Respondents cite Mulholland for general reciprocation of needles from a motor. *See, e.g.,*

Respondents' Jul. 10, 2023 Invalidity Contentions, Ex. F7 at 61-63. But Mulholland provides no information that the motor includes a drive shaft. *See, e.g.*, Mulholland at 4:45-46. Thus Respondents' invalidity contentions fail to provide any evidence that Mulholland discloses this claim limitation.

For example, Mulholland does not disclose "wherein the user holdable device proximal end further includes at least one embedded LED therein and the apparatus further including a photonic signal generator electrically coupled to the least one embedded LED, the at least one embedded LED capable of illuminating the needle assembly when energized" as required by the Asserted Claims. *See* '812 Patent at cl. 17. Indeed, Respondents' invalidity contentions do not cite any evidence that Mulholland discloses this limitation, instead just asserting, "To the extent this limitation is not explicitly or inherently disclosed by this reference, or rendered obvious by the references disclosed herein, it would have further been obvious given the knowledge of a person of ordinary skill in the art and/or other references disclosed and/or charted in Respondents' Invalidity Contentions, at least for the reasons set forth in these Contentions.." *See, e.g.*, Respondents' Jul. 10, 2023 Invalidity Contentions, Ex. F7 at 64. Thus Respondents' invalidity contentions fail to provide any evidence that Mulholland discloses this claim limitation.

For example, Mulholland does not disclose "wherein one of the at least one electrical contacts includes a pin that is extendable in the same direction as the plurality of needles" as required by the Asserted Claims. *See* '812 Patent at cl. 18. Indeed, Respondents' invalidity contentions do not cite any evidence that Mulholland discloses this limitation, instead just asserting, "To the extent this limitation is not explicitly or inherently disclosed by this reference, or rendered obvious by the references disclosed herein, it would have further been obvious given the knowledge of a person of ordinary skill in the art and/or other references disclosed and/or charted in Respondents'

Invalidity Contentions, at least for the reasons set forth in these Contentions.." *See, e.g.*, Respondents' Jul. 10, 2023 Invalidity Contentions, Ex. F7 at 64. Thus Respondents' invalidity contentions fail to provide any evidence that Mulholland discloses this claim limitation.

For example, Mulholland does not disclose "wherein one of the user holdable device proximal end and the needle assembly includes at least two extendable electrical contacts and the other includes at least two electrical contacts couplable to the at least two extendable electrical contacts" as required by the Asserted Claims. *See* '812 Patent at cl. 19. Indeed, Respondents' invalidity contentions do not cite any evidence that Mulholland discloses this limitation, instead just asserting, "To the extent this limitation is not explicitly or inherently disclosed by this reference, or rendered obvious by the references disclosed herein, it would have further been obvious given the knowledge of a person of ordinary skill in the art and/or other references disclosed and/or charted in Respondents' Invalidity Contentions, at least for the reasons set forth in these Contentions.." *See, e.g.*, Respondents' Jul. 10, 2023 Invalidity Contentions, Ex. F7 at 64. Thus Respondents' invalidity contentions fail to provide any evidence that Mulholland discloses this claim limitation.

Respondents attempt to gap-fill these glaring deficiencies in Mulholland through a broad brush statement for each limitation that "[t]o the extent this limitation is not explicitly or inherently disclosed by this reference, or rendered obvious by the references disclosed herein, it would have further been obvious given the knowledge of a person of ordinary skill in the art and/or other references disclosed and/or charted in Respondents' Invalidity Contentions." *See, e.g.,* Respondents' Jul. 10, 2023 Invalidity Contentions, Exs. D7, E7, and F7 at *passim*. But Respondents' catch-all qualifications are inadequate to establish that any of the Asserted Claims are invalid. First, it is improper to rely on a person of skill's knowledge "as a wholesale substitute for reasoned analysis and evidentiary support, especially when dealing with a limitation missing from the prior art

[redacted]

references specified." *Arendi S.A.R.L.*, 832 F.3d at 1362. Mullholand's deficiencies go to critical elements of the Asserted Claims that cannot be papered over with conclusory allegations about a POSITA's background knowledge. Second, as explained in the sections discussing Respondents' other invalidity charts, the other references Respondents try to combine with Mulholland each themselves lack various limitations of the Asserted Claims.

Thus, Respondents have not established a *prima facie* case of anticipation or obviousness.

h. Exhibits D8, E8, and F8 ("Na '848")

In Exhibits D8, E8, and F8, Respondents argue that "International Publication No. WO2010/016848 ("Na '848"), published February 11, 2010, qualifies as prior art under at least AIA 35 U.S.C. § 102(a)(1) because it is a patent that published before the filing of the earliest application to which the ['536, '774, and '812 Patents] could claim priority." *See* Respondents' Jul. 10, 2023 Invalidity Contentions, Exs. D8, E8, and F8. Respondents further argue that, "[t]o the extent that the ['536, '774, and '812 Patents are] subject to pre-AIA law, Na '848 qualifies as prior art under at least 35 U.S.C. § 102(b) (pre-AIA) because it is a patent that published more than one year before the filing of the earliest application to which the ['536, '774, and '812 Patents] could claim priority. Na '848 also qualifies as prior art under at least 35 U.S.C. § 102(a) (pre-AIA) because it is a patent that was published prior to the alleged invention of the ['536, '774, and '812 Patents.]" *Id*. Respondents then contend that:

> The asserted claims of the ['536, '774, and '812 Patents] are invalid under 35 U.S.C. § 102 (AIA or pre-AIA) as anticipated by Na '848, and/or are invalid under 35 U.S.C. § 103 (AIA or pre-AIA) as obvious in view of Na '848 alone, or in combination with one or more other references identified herein and/or in Respondents' Invalidity Contentions, at least based on Respondents' understanding of Complainant's application of the asserted claims in an effort to show infringement.

Id.. Na '848 is a publication of a 2008 priority application, however, and Respondents have not demonstrated that it qualifies as prior art.

As discussed below, NA ’848 does not anticipate or render obvious (either alone or in combination) the Asserted Claims of the ’536, ’774, and ’812 Patents.

For example, Na ’848 does not disclose “placing a user holdable device releasably couplable deployable needle assembly end surface on or near dermatological tissue to be treated, the holdable device including a proximal end and the releasably couplable deployable needle assembly” as required by the Asserted Claims. *See* ’536 Patent at cl. 1. Specifically, for this limitation, Respondents cite to various apparatuses with a handle 230, 330, 430 and (1) plates 250, 350 with a rigid section 290, 357, deformable section 270, 355, and layer 250, 353 with pins 251, 351 or (2) curved roller 450 and pins 451. *See, e.g.,* Respondents’ Jul. 10, 2023 Invalidity Contentions, Ex. D8 at 3-12. But Na ’848 does not disclose the plates or curved roller, or any part of them, are releasably couplable to a user holdable device, that they are a deployable needle assembly, or that the needles are extendable. *See, e.g.*, Na ’848 at ¶¶ 22-38, Fig. 1A-4C. Thus Respondents’ invalidity contentions fail to provide any evidence that Na ’848 discloses this claim limitation.

For example, NA ’848 does not disclose “the deployable needle assembly mechanically separatably from the proximal end and including a plurality of needles extendable from the deployable needle assembly end surface” as required by the Asserted Claims. *See* ’536 Patent at cl. 1. Specifically, for this limitation, Respondents cite to various apparatuses with a handle 230, 330, 430 and (1) plates 250, 350 with a rigid section 290, 357, deformable section 270, 355, and layer 250, 353 with pins 251, 351 or (2) curved roller 450 and pins 451. *See, e.g.,* Respondents’ Jul. 10, 2023 Invalidity Contentions, Ex. D8 at 3-12. But Na ’848 does not disclose the plates or curved roller, or any part of them, are releasably couplable to a user holdable device, that they are a deployable needle assembly, or that the needles are extendable. *See, e.g.*, Na ’848 at ¶¶ 22-38, Fig.

1A-4C. Thus Respondents' invalidity contentions fail to provide any evidence that Na '848 discloses this claim limitation.

For example, Na '848 does not disclose "one of the proximal end and the deployable needle assembly including at least one electrical conductor and the other including at least one restorably deflectable electrical contact couplable to the one of the proximal end and the deployable needle assembly at least one electrical conductor" as required by the Asserted Claims. *See* '536 Patent at cl. 1. Indeed, Respondents' invalidity contentions do not cite any evidence that Na '848 discloses this limitation, instead just asserting that "Na '848, in combination with the general knowledge of a POSA and/or other references identified in Respondents' Invalidity Contentions" would render this limitation obvious. *See, e.g.*, Respondents' Jul. 10, 2023, Ex. D8 at 12. Thus Respondents' invalidity contentions fail to provide any evidence that Na '848 discloses this claim limitation.

For example, Na '848 does not disclose "communicating electrical signals from the proximal end to the plurality of the extendable needles" as required by the Asserted Claims. *See* '536 Patent at cl. 1. Specifically, for this limitation, Respondents cite to various apparatuses with a handle 230, 330, 430 and (1) plates 250, 350 with a rigid section 290, 357, deformable section 270, 355, and layer 250, 353 with pins 251, 351 or (2) curved roller 450 and pins 451. *See, e.g.,* Respondents' Jul. 10, 2023 Invalidity Contentions, Ex. D8 at 12-19. But Na '848 does not disclose the needles are extendable. *See, e.g.*, Na '848 at ¶¶ 22-38, Fig. 1A-4C. Thus Respondents' invalidity contentions fail to provide any evidence that Na '848 discloses this claim limitation.

For example, Na '848 does not disclose "energizing a motor coupled to a plurality of extendable needles to cause a plurality of the extendable needles to extend a desired distance from the needle assembly end surface" as required by the Asserted Claims. *See* '536 Patent at cl. 1. Specifically, for this limitation, Respondents cite to various apparatuses with a handle 230, 330,

430 and (1) plates 250, 350 with a rigid section 290, 357, deformable section 270, 355, and layer 250, 353 with pins 251, 351 or (2) curved roller 450 and pins 451. *See, e.g.,* Respondents' Jul. 10, 2023 Invalidity Contentions, Ex. D8 at 19-26. But Na '848 does not disclose a motor and the needles are extendable to a desired distance. Thus Respondents' invalidity contentions fail to provide any evidence that Na '848 discloses this claim limitation.

For example, Na '848 does not disclose "wherein the proximal end further includes at least one embedded LED therein and further including energizing the LED when the signal generator is energized, the at least one embedded LED illuminating the deployable needle assembly when energized" as required by the Asserted Claims. *See* '536 Patent at cl. 4. Specifically, for this limitation, Respondents cite Na '848 for a plurality of embedded LEDs 32A, 32B. *See, e.g.,* Respondents' Jul. 10, 2023 Invalidity Contentions, Ex. D8 at 29-35. But Na '848 discloses that the plurality of embedded LEDs 32A, 32B are included in "the plate or roller 200, 350, 450." *See, e.g.*, Na '848 at ¶ 34. Further, for the reasons stated above, Na '848 does not disclose a deployable needle assembly. Thus Respondents' invalidity contentions fail to provide any evidence that Na '848 discloses this claim limitation.

For example, Na '848 does not disclose "wherein the releasably couplable deployable needle assembly includes a translucent section to communicate illumination from the least one embedded LED to the plurality of extendable needles" as required by the Asserted Claims. *See* '536 Patent at cl. 5. Specifically, for this limitation, Respondents cite Na '848 for "pin section 250, 353 may be translucent." *See, e.g.,* Respondents' Jul. 10, 2023 Invalidity Contentions, Ex. D8 at 35. But Na '848 discloses the plurality of embedded LEDs 32A, 32B are included in "the plate or roller 200, 350, 450," the plates or curved roller, or any part of them, are releasably couplable to a user holdable device, that they are a deployable needle assembly, or that the needles are extendable.

See, e.g., Na '848 at ¶ 34. Thus Respondents' invalidity contentions fail to provide any evidence that Na '848 discloses this claim limitation.

For example, NA '848 does not disclose "further comprising deploying the plurality of extendable needles to a predetermined depth and employing the signal generator to energize the plurality of extended needles to a predetermined intensity for a predetermined duty cycle" as required by the Asserted Claims. *See* '536 Patent at cl. 9. Specifically, for this limitation, Respondents cite Na '848 for its diagrams of electrical signal waveforms that may be applied to the pins 230, 351, 451. *See, e.g.,* Respondents' Jul. 10, 2023 Invalidity Contentions, Ex. D8 at 35-38. But Na '848 does not disclose the needles extending or deploying to a predetermined depth. Thus Respondents' invalidity contentions fail to provide any evidence that Na '848 discloses this claim limitation.

For example, Na '848 does not disclose "a user holdable device including a proximal end and a releasably couplable deployable needle assembly" as required by the Asserted Claims. *See* '536 Patent at cl. 11. Specifically, for this limitation, Respondents cite to "citations for element 1.1." *See, e.g.,* Respondents' Jul. 10, 2023 Invalidity Contentions, Ex. D8 at 39. But Na '848 does not disclose the plates or curved roller, or any part of them, are releasably couplable to a user holdable device, that they are a deployable needle assembly, or that the needles are extendable. *See, e.g.*, Na '848 at ¶¶ 22-38, Fig. 1A-4C. Thus Respondents' invalidity contentions fail to provide any evidence that Na '848 discloses this claim limitation.

For example, Na '848 does not disclose "the deployable needle assembly mechanically separatably from the proximal end and including a plurality of extendable needles, a plurality of the extendable needles extendable from a deployable needle assembly end surface" as required by the Asserted Claims. *See* '536 Patent at cl. 11. Specifically, for this limitation, Respondents cite

"citations for element 1.1." *See, e.g.,* Respondents' Jul. 10, 2023 Invalidity Contentions, Ex. D8 at 39. But Na '848 does not disclose the plates or curved roller, or any part of them, are releasably couplable to a user holdable device, that they are a deployable needle assembly, or that the needles are extendable. *See, e.g.*, Na '848 at ¶¶ 22-38, Fig. 1A-4C. Thus Respondents' invalidity contentions fail to provide any evidence that NA '848 discloses this claim limitation.

For example, Na '848 does not disclose "one of the proximal end and the deployable needle assembly including at least one electrical conductor and the other including at least one restorably deflectable electrical contact couplable to the one of the proximal end and the deployable needle assembly at least one electrical conductor" as required by the Asserted Claims. *See* '536 Patent at cl. 11. Specifically, for this limitation, Respondents cite "citations for element 1.2." *See, e.g.,* Respondents' Jul. 10, 2023 Invalidity Contentions, Ex. D8 at 39-40. But Na '848 does not disclose a deployable needle assembly, that the needles are extendable, or information about electrical contacts between the handle and the plate because there are none as the wires go through the handle straight to rigid section or layer. *See, e.g.*, Na '848 at ¶¶ 26, 30, Fig. 2B, 2F. Thus Respondents' invalidity contentions fail to provide any evidence that Na '848 discloses this claim limitation.

For example, Na '848 does not disclose "a motor coupled to a plurality of extendable needles that causes the plurality of extendable needles to extend a desired distance from the needle assembly end surface when the motor is energized with a particular signal" as required by the Asserted Claims. *See* '536 Patent at cl. 11. Specifically, for this limitation, Respondents cite "citations for element 1.4." *See, e.g.,* Respondents' Jul. 10, 2023 Invalidity Contentions, Ex. D8 at 40. But Na '848 does not disclose a motor and the needles are extendable much less a desired distance. Thus Respondents' invalidity contentions fail to provide any evidence that Na '848 discloses this claim limitation.

For example, Na ’848 does not disclose “wherein the proximal end includes the needle deploying motor, the motor including a draft shaft releasably couplable to the deployable needle assembly” as required by the Asserted Claims. *See* ’536 Patent at cl. 13. Indeed, Respondents’ invalidity contentions do not cite any evidence that NA ’848 discloses this limitation, instead just asserting that “Na ’848, in combination with the general knowledge of a POSA and/or other references identified in Respondents’ Invalidity Contentions, renders obvious the proximal end including the needle deploying motor, and the motor including a draft shaft releasably couplable to the deployable needle assembly.” *See, e.g.*, Respondents’ Jul. 10, 2023, Ex. D8 at 41-42. Invalidity Contentions, Ex. D8 at 43. Thus Respondents’ invalidity contentions fail to provide any evidence that Na ’848 discloses this claim limitation.

For example, Na ’848 does not disclose “the wherein at least one restorably deflectable electrical contact includes a depressible pin” as required by the Asserted Claims. *See* ’536 Patent at cl. 16. Indeed, Respondents’ invalidity contentions do not cite any evidence that Na ’848 discloses this limitation, instead just asserting that “Na ’848, in combination with the general knowledge of a POSA and/or other references identified in Respondents’ Invalidity Contentions, renders obvious the at least one restorably deflectable electrical contact including a depressible pin..” *See, e.g.*, Respondents’ Jul. 10, 2023, Ex. D8 at 41. Thus Respondents’ invalidity contentions fail to provide any evidence that Na ’848 discloses this claim limitation.

For example, Na ’848 does not disclose “wherein a first deflectable electrical contact is coupled to a first plurality of the plurality of extendable needles and a second deflectable electrical contact is coupled to a second, different plurality of the plurality of extendable needles” as required by the Asserted Claims. *See* ’536 Patent at cl. 17. Specifically, for this limitation, Respondents cite Na ’848 for the pins potentially being connected to a first wire 331 or second wire 332. *See,*

e.g., Respondents' Jul. 10, 2023 Invalidity Contentions, Ex. D8 at 41-42. But Na '848 does not disclose a deflectable electrical contact and, if it existed, that it would be coupled to any extendable needles. *See, e.g.*, Na '848 at ¶¶ 29, 30. Thus Respondents' invalidity contentions fail to provide any evidence that Na '848 discloses this claim limitation.

For example, Na '848 does not disclose "a signal generator electrically coupled to the plurality of extended needles to produce pulsed radio frequency signals across the plurality of needles to affect dermatological tissue near the plurality of needles" as required by the Asserted Claims. *See* '774 Patent at cl. 11. Specifically, for this limitation, Respondents cite Na '848 for signals related to pin vibrations. *See, e.g.,* Respondents' Jul. 10, 2023 Invalidity Contentions, Ex. E8 at 12-19. But Na '848 discloses only signals for vibrating pins—not pulsed radio frequency signals across a plurality of needles to affect dermatological tissue near the plurality of needles. *See, e.g.*, Na '848 at ¶¶ 26-29, 33, 39-44, Figs. 5A, 5B, and 6. Thus Respondents' invalidity contentions fail to provide any evidence that Na '848 discloses this claim limitation.

For example, Na '848 does not disclose "wherein the device includes an end surface configured to be placed on or near dermatological tissue to be treated, the end surface including a plurality of needles extendable a desired distance from the end surface" and "further including a mechanism for causing the plurality of the extendable needles to extend a desired distance from the end surface" as required by the Asserted Claims. *See* '774 Patent at cl. 13. Indeed, Respondents' invalidity contentions do not cite any evidence that Na '848 discloses this limitation, instead just asserting that "Na '848, in combination with the general knowledge of a POSA and/or other references identified in Respondents' Invalidity Contentions, renders obvious a mechanism for causing the plurality of the extendable needles to extend a desired distance from the end surface."

See, e.g., Respondents' Jul. 10, 2023 Invalidity Contentions, Ex. E8 at 20. Further, Na '848 does not disclose the needles are extendable or causing a plurality of the extendable needles to extend a desired distance. *See, e.g.*, Na '848 at ¶¶ 22-38, Fig. 1A-4C. Thus Respondents' invalidity contentions fail to provide any evidence that Na '848 discloses these claim limitations.

For example, Na '848 does not disclose "further including a motor coupled to the plurality of extendable needles that may be directed to cause the plurality of the extendable needles to extend a desired distance from the end surface." as required by the Asserted Claims. *See* '774 Patent at cl. 14. Indeed, Respondents' invalidity contentions do not cite any evidence that Na '848 discloses this limitation, instead just asserting that "Na '848, in combination with the general knowledge of a POSA and/or other references identified in Respondents' Invalidity Contentions, renders obvious a motor coupled to the plurality of extendable needles that may be directed to cause the plurality of the extendable needles to extend a desired distance from the end surface." *See, e.g.*, Respondents' Jul. 10, 2023 Invalidity Contentions, Ex. E8 at 20. Further, Na '848 does not disclose the needles are extendable or causing a plurality of the extendable needles to extend a desired distance. *See, e.g.*, Na '848 at ¶¶ 22-38, Fig. 1A-4C. Thus Respondents' invalidity contentions fail to provide any evidence that Na '848 discloses this claim limitation.

For example, Na '848 does not disclose "placing a user holdable device releasably couplable deployable needle module end surface on or near dermatological tissue to be treated, the user holdable device including a proximal end and the releasably couplable deployable needle module" as required by the Asserted Claims. *See* '812 Patent at cl. 1. Specifically, for this limitation, Respondents cite to various apparatuses with a handle 230, 330, 430 and (1) plates 250, 350 with a rigid section 290, 357, deformable section 270, 355, and layer 250, 353 with pins 251, 351 or (2) curved roller 450 and pins 451. *See, e.g.,* Respondents' Jul. 10, 2023 Invalidity Contentions,

Ex. F8 at 3-12. But Na '848 does not disclose anything that could be considered a needle module, the plates or curved roller, or any part of them, are releasably couplable to a user holdable device, that they are a deployable needle module, or that the needles are extendable. *See, e.g.*, Na '848 at ¶¶ 22-38, Fig. 1A-4C. Thus Respondents' invalidity contentions fail to provide any evidence that Na '848 discloses this claim limitation.

For example, Na '848 does not disclose "the releasably couplable deployable needle module mechanically separatably from the user holdable device proximal end and including a needle assembly including a plurality of needles" as required by the Asserted Claims. *See* '812 Patent at cl. 1. Specifically, for this limitation, Respondents cite to various apparatuses with a handle 230, 330, 430 and (1) plates 250, 350 with a rigid section 290, 357, deformable section 270, 355, and layer 250, 353 with pins 251, 351 or (2) curved roller 450 and pins 451. *See, e.g.,* Respondents' Jul. 10, 2023 Invalidity Contentions, Ex. F8 at 3-12. But Na '848 does not disclose anything that could be considered a deployable needle module or anything mechanically separatably from the handle. *See, e.g.*, Na '848 at ¶¶ 22-38, Fig. 1A-4C. Thus Respondents' invalidity contentions fail to provide any evidence that Na '848 discloses this claim limitation.

For example, Na '848 does not disclose "the needle assembly movable within the releasably couplable deployable needle module to extend the plurality of needles from the releasably couplable deployable needle assembly end surface while at least one electrical contact of the needle assembly remains electrically coupled to at least one electrical contact of the user holdable device proximal end" as required by the Asserted Claims. *See* '812 Patent at cl. 1. Indeed, Respondents' invalidity contentions do not cite any evidence that Na '848 discloses this limitation, instead just asserting that "Na '848, in combination with the general knowledge of a POSA and/or other references identified in Respondents' Invalidity Contentions, renders obvious the needle

assembly being movable within the releasably couplable deployable needle module to extend the plurality of needles from the releasably couplable deployable needle assembly end surface while at least one electrical contact of the needle assembly remains electrically coupled to at least one electrical contact of the user holdable device proximal end." *See, e.g.*, Respondents' Jul. 10, 2023 Invalidity Contentions, Ex. F8 at 12. Thus Respondents' invalidity contentions fail to provide any evidence that Na '848 discloses this claim limitation.

For example, Na '848 does not disclose "energizing a motor coupled to the needle assembly to cause the plurality of the needles to extend a desired distance from the releasably couplable deployable needle module end surface," "further comprising energizing the plurality of needles via a signal generator electrically coupled to the user holdable device proximal end," "wherein the user holdable device proximal end further includes at least one embedded LED therein and further including energizing the at least one embedded LED so the at least one embedded LED illuminates the releasably couplable deployable needle module," and "wherein the needle assembly includes a translucent section and further including energizing the least one embedded LED to illuminate the plurality of needles via the needle assembly translucent section" as required by the Asserted Claims. *See* '812 Patent at cl. 5. Specifically, for this limitation, Respondents cite Na '848 for "pin section 250, 353 may be translucent." *See, e.g.,* Respondents' Jul. 10, 2023 Invalidity Contentions, Ex. F8 at 29. But Na '848 discloses the plurality of embedded LEDs 32A, 32B are included in "the plate or roller 200, 350, 450," and it does not disclose that the plates or curved roller, or any part of them, are releasably couplable to a user holdable device, it does not disclose deployable needle module, and it does not disclose a motor to cause the plurality of the needles to extend a desired distance. *See, e.g.*, Na '848 at ¶ 34. Thus Respondents' invalidity contentions fail to provide any evidence that Na '848 discloses this claim limitation.

For example, Na ’848 does not disclose “energizing a motor coupled to the needle assembly to cause the plurality of the needles to extend a desired distance from the releasably couplable deployable needle module end surface” and “further comprising energizing the motor to deploy the plurality of needles to a predetermined depth and directing the signal generator to energize the plurality of needles at a predetermined intensity for a predetermined duty cycle” as required by the Asserted Claims. *See* ’812 Patent at cl. 6. Specifically, for this limitation, Respondents cite Na ’848 for signals related to pin vibrations. *See, e.g.,* Respondents’ Jul. 10, 2023 Invalidity Contentions, Ex. F8 at 30-33. But Na ’848 does not disclose a motor or needles that are extendable or deployable a desired distance or a predetermined depth and it also does not disclose a releasably couplable deployable needle module. Thus Respondents’ invalidity contentions fail to provide any evidence that Na ’848 discloses these claim limitations.

For example, Na ’848 does not disclose “a first electrical contact of the at least one electrical contact is electrically coupled to a first plurality of the plurality of needles and a second electrical contact of the at least one electrical contact is electrically coupled to a second, different plurality of the plurality of needles” as required by the Asserted Claims. *See* ’812 Patent at cl. 10. Specifically, for this limitation, Respondents cite Na ’848 for the pins potentially being connected to a first wire 331 or second wire 332. *See, e.g.,* Respondents’ Jul. 10, 2023 Invalidity Contentions, Ex. F8 at 33-34. But Na ’848 does not disclose the claimed electrical contacts. Thus Respondents’ invalidity contentions fail to provide any evidence that Na ’848 discloses this claim limitation.

For example, Na ’848 does not disclose “a releasably couplable deployable needle module” as required by the Asserted Claims. *See* ’812 Patent at cl. 12. Specifically, for this limitation, Respondents cite “citations for element 1.1.” *See, e.g.,* Respondents’ Jul. 10, 2023 Invalidity

Contentions, Ex. F8 at 35. But Na '848 does not disclose anything that could be considered a needle module, the plates or curved roller, or any part of them, are releasably couplable to a user holdable device, that they are a deployable needle module, or that the needles are extendable. *See, e.g.*, Na '848 at ¶¶ 22-38, Fig. 1A-4C. Thus Respondents' invalidity contentions fail to provide any evidence that Na '848 discloses this claim limitation.

For example, Na '848 does not disclose "the releasably couplable deployable needle module mechanically separatably from the user holdable device proximal end and including a needle assembly including a plurality of needles" as required by the Asserted Claims. *See* '812 Patent at cl. 12. Specifically, for this limitation, Respondents cite "citations for element 1.1." *See, e.g.,* Respondents' Jul. 10, 2023 Invalidity Contentions, Ex. F8 at 35. But Na '848 does not disclose anything that could be considered a deployable needle module or anything mechanically separatably from the handle. *See, e.g.*, Na '848 at ¶¶ 22-38, Fig. 1A-4C. Thus Respondents' invalidity contentions fail to provide any evidence that Na '848 discloses this claim limitation.

For example, Na '848 does not disclose "the needle assembly movable within the releasably couplable deployable needle module to extend the plurality of needles from the releasably couplable deployable needle assembly end surface while at least one electrical contact of the needle assembly remains electrically coupled to at least one electrical contact of the user holdable device proximal end" as required by the Asserted Claims. *See* '812 Patent at cl. 12. Specifically, for this limitation, Respondents cite "citations for element 1.2.". *See, e.g.,* Respondents' Jul. 10, 2023 Invalidity Contentions, Ex. F8 at 35. But Na '848 does not disclose anything that could be considered a deployable needle module or deployable needle assembly, or that the needles are extendable. *See, e.g.*, Na '848 at ¶¶ 22-38, Fig. 1A-4C. Thus Respondents' invalidity contentions fail to provide any evidence that Na '848 discloses this claim limitation.

For example, Na ’848 does not disclose “further including a motor coupled to the needle assembly to extend the plurality of needles a desired distance from the releasably couplable deployable needle assembly end surface when the motor is energized with a particular signal” as required by the Asserted Claims. *See* ’812 Patent at cl. 13. Specifically, for this limitation, Respondents cite “citations for elements 5.0 and 6.0.” *See, e.g.,* Respondents’ Jul. 10, 2023 Invalidity Contentions, Ex. F8 at 36. But Na ’848 does not disclose a motor, needles that are extendable a desired distance, or deployable needle assembly. Thus Respondents’ invalidity contentions fail to provide any evidence that Na ’848 discloses this claim limitation.

For example, Na ’848 does not disclose “wherein the user holdable device proximal end includes the motor, the motor including a drive shaft releasably couplable to the needle assembly” as required by the Asserted Claims. *See* ’812 Patent at cl. 16. Indeed, Respondents’ invalidity contentions do not cite any evidence that Na ’848 discloses this limitation, instead just asserting that “Na ’848, in combination with the general knowledge of a POSA and/or other references identified in Respondents’ Invalidity Contentions, renders obvious the user holdable device proximal end including the motor, and the motor including a drive shaft releasably couplable to the needle assembly.” *See, e.g*., Respondents’ Jul. 10, 2023 Invalidity Contentions, Ex. F8 at 36-37. Thus Respondents’ invalidity contentions fail to provide any evidence that Na ’848 discloses this claim limitation.

For example, Na ’848 does not disclose “wherein the user holdable device proximal end further includes at least one embedded LED therein and the apparatus further including a photonic signal generator electrically coupled to the least one embedded LED, the at least one embedded LED capable of illuminating the needle assembly when energized” as required by the Asserted Claims. *See* ’812 Patent at cl. 17. Specifically, for this limitation, Respondents cite “citations for

[redacted]

element 5.0." *See, e.g.,* Respondents' Jul. 10, 2023 Invalidity Contentions, Ex. F8 at 37. But Na '848 discloses the plurality of embedded LEDs 32A, 32B are included in "the plate or roller 200, 350, 450," and it does not disclose that the plates or curved roller, or any part of them, are releasably couplable to a user holdable device, it does not disclose the claimed needle module or motor. *See, e.g.*, Na '848 at ¶ 34. Thus Respondents' invalidity contentions fail to provide any evidence that Na '848 discloses this claim limitation.

For example, Na '848 does not disclose "wherein one of the at least one electrical contacts includes a pin that is extendable in the same direction as the plurality of needles" as required by the Asserted Claims. *See* '812 Patent at cl. 18. Indeed, Respondents' invalidity contentions do not cite any evidence that Na '848 discloses this limitation, instead just asserting that citations for element 9.0," while there is no section in the invalidity chart addressing element 9.0. *See, e.g.*, Respondents' Jul. 10, 2023 Invalidity Contentions, Ex. F8 at 33, 37. Thus Respondents' invalidity contentions fail to provide any evidence that Na '848 discloses this claim limitation.

For example, Na '848 does not disclose "wherein one of the user holdable device proximal end and the needle assembly includes at least two extendable electrical contacts and the other includes at least two electrical contacts couplable to the at least two extendable electrical contacts" as required by the Asserted Claims. *See* '812 Patent at cl. 19. Indeed, Respondents' invalidity contentions do not cite any evidence that Na '848 discloses this limitation, instead just asserting that citations for elements 7.0 and 9.0," while there is no section in the invalidity chart addressing elements 7.0 or 9.0. *See, e.g.*, Respondents' Jul. 10, 2023 Invalidity Contentions, Ex. F8 at 33, 37+38. Thus Respondents' invalidity contentions fail to provide any evidence that Na '848 discloses this claim limitation.

Respondents attempt to gap-fill these glaring deficiencies in Na '848 through a broad brush statement for each limitation that "[t]o the extent this limitation is not explicitly or inherently disclosed by this reference, or rendered obvious by the references disclosed herein, it would have further been obvious given the knowledge of a person of ordinary skill in the art and/or other references disclosed and/or charted in Respondents' Invalidity Contentions." *See, e.g.,* Respondents' Jul. 10, 2023 Invalidity Contentions, Exs. D8, E8, and F8 at *passim*. But Respondents' catch-all qualifications are inadequate to establish that any of the Asserted Claims are invalid. First, it is improper to rely on a person of skill's knowledge "as a wholesale substitute for reasoned analysis and evidentiary support, especially when dealing with a limitation missing from the prior art references specified." *Arendi S.A.R.L.*, 832 F.3d at 1362. Na '848's deficiencies go to critical elements of the Asserted Claims that cannot be papered over with conclusory allegations about a POSITA's background knowledge. Second, as explained in the sections discussing Respondents' other invalidity charts, the other references Respondents try to combine with Na '848 each themselves lack various limitations of the Asserted Claims.

Thus, Respondents have not established a *prima facie* case of anticipation or obviousness.

i. Exhibits D9 and F10 ("Kang '395")[32]

In Exhibits D9 and F10, Respondents argue that "KR 10-0719395 ("Kang '395") qualifies as prior art under at least AIA 35 U.S.C. § 102(a)(1) because it is a patent that published before the filing of the earliest application to which the ['536 and '812 Patents] could claim priority." *See* Respondents' Jul. 10, 2023 Invalidity Contentions, Exs. D9 and F10. Respondents further argue that, "[t]o the extent that the ['536 and '812 Patents are] subject to pre-AIA law, Kang '395

[32] Respondents did not serve an invalidity chart of Kang '395 with respect to the '774 Patent. To the extent Respondents later pursue any prior art invalidity ground based whole or in part on Kang '395, Serendia reserves the right to respond.

qualifies as prior art under at least 35 U.S.C. § 102(b) (pre-AIA) because it is a patent that published more than one year before the filing of the earliest application to which the ['536 and '836 Patents] could claim priority." *Id.* Respondents then contend that:

> The asserted claims of the ['536 and '812 Patents] are invalid under 35 U.S.C. § 102 (AIA or pre-AIA) as anticipated by Kang '395, and/or are invalid under 35 U.S.C. § 103 (AIA or pre-AIA) as obvious in view of Kang '395 alone, or in combination with one or more other references identified herein and/or in Respondents' Invalidity Contentions, at least based on Respondents' understanding of Complainant's application of the asserted claims in an effort to show infringement.

Id..

As discussed below, Kang '395 does not anticipate or render obvious (either alone or in combination) the Asserted Claims of the '536, '774, and '812 Patents.

For example, Kang '395 does not disclose "placing a user holdable device releasably couplable deployable needle assembly end surface on or near dermatological tissue to be treated, the holdable device including a proximal end and the releasably couplable deployable needle assembly" as required by the Asserted Claims. *See* '536 Patent at cl. 1. Specifically, for this limitation, Respondents cite Kang '395 for (1) a system described in a Korean patent document with needle member 20 that is apparently used to stitch wire member 30 between the skin and subcutaneous tissue, which is then used to apply high frequency; and (2) a system with a main body 100 and handpiece 200 connected by connection line 110, where the handpiece 200 has a handle 210, insertion part 220, heating member 230, and light-emitting member 250. *See, e.g.,* Respondents' Jul. 10, 2023 Invalidity Contentions, Ex. D9 at 2-4. But Kang '395 discloses the system in the Korean patent document only uses the needle member 20 to get the wire member 30 into position and the allegedly innovative system uses no needle at all. *See, e.g.*, Kang '395 at 3-5, Fig. 2-5. There is no disclosure of any structure associated with a needle or relationship of them with any

other structure. Thus Respondents' invalidity contentions fail to provide any evidence that Kang '395 discloses this claim limitation.

For example, Kang '395 does not disclose "the deployable needle assembly mechanically separatably from the proximal end and including a plurality of needles extendable from the deployable needle assembly end surface" as required by the Asserted Claims. *See* '536 Patent at cl. 1. Specifically, for this limitation, Respondents cite Kang '395 for (1) a system described in a Korean patent document with needle member 20 that is apparently used to stitch wire member 30 between the skin and subcutaneous tissue, which is then used to apply high frequency; and (2) a system with a main body 100 and handpiece 200 connected by connection line 110, where the handpiece 200 has a handle 210, insertion part 220, heating member 230, and light-emitting member 250. *See, e.g.,* Respondents' Jul. 10, 2023 Invalidity Contentions, Ex. D9 at 5. But Kang '395 discloses the system in the Korean patent document only uses the needle member 20 to get the wire member 30 into position and the allegedly innovative system uses no needle at all. *See, e.g.*, Kang '395 at 3-5, Fig. 2-5. There is no disclosure of any structure associated with a needle or relationship of them with any other structure. Thus Respondents' invalidity contentions fail to provide any evidence that Kang '395 discloses this claim limitation.

For example, Kang '395 does not disclose "one of the proximal end and the deployable needle assembly including at least one electrical conductor and the other including at least one restorably deflectable electrical contact couplable to the one of the proximal end and the deployable needle assembly at least one electrical conductor" as required by the Asserted Claims. *See* '536 Patent at cl. 1. Specifically, for this limitation, Respondents cite Kang '395 for (1) a system described in a Korean patent document with needle member 20 that is apparently used to stitch wire member 30 between the skin and subcutaneous tissue, which is then used to apply high

[redacted]

frequency; and (2) a system with a main body 100 and handpiece 200 connected by connection line 110, where the handpiece 200 has a handle 210, insertion part 220, heating member 230, and light-emitting member 250. *See, e.g.,* Respondents' Jul. 10, 2023 Invalidity Contentions, Ex. D9 at 5-6. But Kang '395 discloses the system in the Korean patent document only uses the needle member 20 to get the wire member 30 into position and the allegedly innovative system uses no needle at all. *See, e.g.*, Kang '395 at 3-5, Fig. 2-5. There is no disclosure of any structure associated with a needle or relationship of them with any other structure. Thus Respondents' invalidity contentions fail to provide any evidence that Kang '395 discloses this claim limitation.

For example, Kang '395 does not disclose "communicating electrical signals from the proximal end to the plurality of the extendable needles" as required by the Asserted Claims. *See* '536 Patent at cl. 1. Specifically, for this limitation, Respondents cite Kang '395 for (1) a system described in a Korean patent document with needle member 20 that is apparently used to stitch wire member 30 between the skin and subcutaneous tissue, which is then used to apply high frequency; and (2) a system with a main body 100 and handpiece 200 connected by connection line 110, where the handpiece 200 has a handle 210, insertion part 220, heating member 230, and light-emitting member 250. *See, e.g.,* Respondents' Jul. 10, 2023 Invalidity Contentions, Ex. D9 at 6-7. But Kang '395 discloses the system in the Korean patent document only uses the needle member 20 to get the wire member 30 into position and the allegedly innovative system uses no needle at all. *See, e.g.*, Kang '395 at 3-5, Fig. 2-5. There is no disclosure of any structure associated with a needle or relationship of them with any other structure. Thus Respondents' invalidity contentions fail to provide any evidence that Kang '395 discloses this claim limitation.

For example, Kang '395 does not disclose "energizing a motor coupled to a plurality of extendable needles to cause a plurality of the extendable needles to extend a desired distance from

the needle assembly end surface" as required by the Asserted Claims. *See* '536 Patent at cl. 1. Indeed, Respondents' invalidity contentions do not cite any evidence that Kang '395 discloses this limitation, instead just asserting, "To the extent this limitation is not explicitly or inherently disclosed by this reference, or rendered obvious by the references disclosed herein, it would have further been obvious given the knowledge of a person of ordinary skill in the art and/or other references disclosed and/or charted in Respondents' Invalidity Contentions, at least for the reasons set forth in these Contentions." *See, e.g.*, Respondents' Jul. 10, 2023, Ex. D9 at 7. Thus Respondents' invalidity contentions fail to provide any evidence that Kang '395 discloses this claim limitation.

For example, Kang '395 does not disclose "energizing the plurality of extended needles via a signal generator electrically coupled to the plurality of extended needles" as required by the Asserted Claims. *See* '536 Patent at cl. 1. Specifically, for this limitation, Respondents cite Kang '395 for (1) a system described in a Korean patent document with needle member 20 that is apparently used to stitch wire member 30 between the skin and subcutaneous tissue, which is then used to apply high frequency; and (2) a system with a main body 100 and handpiece 200 connected by connection line 110, where the handpiece 200 has a handle 210, insertion part 220, heating member 230, and light-emitting member 250. *See, e.g.,* Respondents' Jul. 10, 2023 Invalidity Contentions, Ex. D9 at 7-8. But Kang '395 discloses the system in the Korean patent document only uses the needle member 20 to get the wire member 30 into position and the allegedly innovative system uses no needle at all. *See, e.g.*, Kang '395 at 3-5, Fig. 2-5. There is no disclosure of any structure associated with a needle or relationship of them with any other structure. Thus Respondents' invalidity contentions fail to provide any evidence that Kang '395 discloses this claim limitation.

For example, Kang '395 does not disclose "wherein the proximal end further includes at least one embedded LED therein and further including energizing the LED when the signal generator is energized, the at least one embedded LED illuminating the deployable needle assembly when energized" as required by the Asserted Claims. *See* '536 Patent at cl. 4. Specifically, for this limitation, Respondents cite Kang '395 for (1) a system described in a Korean patent document with needle member 20 that is apparently used to stitch wire member 30 between the skin and subcutaneous tissue, which is then used to apply high frequency; and (2) a system with a main body 100 and handpiece 200 connected by connection line 110, where the handpiece 200 has a handle 210, insertion part 220, heating member 230, and light-emitting member 250. *See, e.g.,* Respondents' Jul. 10, 2023 Invalidity Contentions, Ex. D9 at 9-10. But Kang '395 does not specify if the light-emitting member 250 is an LED and Kang '395 also does not disclose embedding the light-emitting member 250 or anything connected to a structure associated with a needle because there is no needle at all in the alleged invention and the Korean document needle is used only to position wire member 200. *See, e.g.*, Kang '395 at 3-5, Fig. 2-5. Thus Respondents' invalidity contentions fail to provide any evidence that Kang '395 discloses this claim limitation.

For example, Kang '395 does not disclose "wherein the releasably couplable deployable needle assembly includes a translucent section to communicate illumination from the least one embedded LED to the plurality of extendable needles" as required by the Asserted Claims. *See* '536 Patent at cl. 5. Specifically, for this limitation, Respondents cite Kang '395 for (1) a system described in a Korean patent document with needle member 20 that is apparently used to stitch wire member 30 between the skin and subcutaneous tissue, which is then used to apply high frequency; and (2) a system with a main body 100 and handpiece 200 connected by connection line 110, where the handpiece 200 has a handle 210, insertion part 220, heating member 230, and light-

emitting member 250. *See, e.g.,* Respondents' Jul. 10, 2023 Invalidity Contentions, Ex. D9 at 10-11. But Kang '395 does not specify if the light-emitting member 250 is an LED and Kang '395 also does not disclose embedding the light-emitting member 250 or anything connected to a structure associated with a needle because there is no needle at all in the alleged invention and the Korean document needle is used only to position wire member 200. *See, e.g.*, Kang '395 at 3-5, Fig. 2-5. Thus Respondents' invalidity contentions fail to provide any evidence that Kang '395 discloses this claim limitation.

For example, Kang '395 does not disclose "further comprising deploying the plurality of extendable needles to a predetermined depth and employing the signal generator to energize the plurality of extended needles to a predetermined intensity for a predetermined duty cycle" as required by the Asserted Claims. *See* '536 Patent at cl. 9. Specifically, for this limitation, Respondents cite Kang '395 for (1) a system described in a Korean patent document with needle member 20 that is apparently used to stitch wire member 30 between the skin and subcutaneous tissue, which is then used to apply high frequency; and (2) a system with a main body 100 and handpiece 200 connected by connection line 110, where the handpiece 200 has a handle 210, insertion part 220, heating member 230, and light-emitting member 250. *See, e.g.,* Respondents' Jul. 10, 2023 Invalidity Contentions, Ex. D9 at 11-12. But Kang '395 discloses the system in the Korean patent document only uses the needle member 20 to get the wire member 30 into position and the allegedly innovative system uses no needle at all. *See, e.g.*, Kang '395 at 3-5, Fig. 2-5. There is no disclosure of any structure associated with a needle or relationship of them with any other structure. Kang '395 provides no information about predetermined intensity or duty cycles. *See, e.g.*,

Kang ’395 at 3-5, Fig. 2-5. Thus Respondents’ invalidity contentions fail to provide any evidence that Kang ‘395 discloses this claim limitation.

For example, Kang ‘395 does not disclose “a user holdable device including a proximal end and a releasably couplable deployable needle assembly” as required by the Asserted Claims. *See* ’536 Patent at cl. 11. Specifically, for this limitation, Respondents cite Kang ’395 for (1) a system described in a Korean patent document with needle member 20 that is apparently used to stitch wire member 30 between the skin and subcutaneous tissue, which is then used to apply high frequency; and (2) a system with a main body 100 and handpiece 200 connected by connection line 110, where the handpiece 200 has a handle 210, insertion part 220, heating member 230, and light-emitting member 250. *See, e.g.,* Respondents’ Jul. 10, 2023 Invalidity Contentions, Ex. D9 at 13-14. But Kang ’395 discloses the system in the Korean patent document only uses the needle member 20 to get the wire member 30 into position and the allegedly innovative system uses no needle at all. *See, e.g.*, Kang ’395 at 3-5, Fig. 2-5. There is no disclosure of any structure associated with a needle or relationship of them with any other structure. Thus Respondents’ invalidity contentions fail to provide any evidence that Kang ‘395 discloses this claim limitation.

For example, Kang ‘395 does not disclose “the deployable needle assembly mechanically separatably from the proximal end and including a plurality of extendable needles, a plurality of the extendable needles extendable from a deployable needle assembly end surface” as required by the Asserted Claims. *See* ’536 Patent at cl. 11. Specifically, for this limitation, Respondents cite Kang ’395 for (1) a system described in a Korean patent document with needle member 20 that is apparently used to stitch wire member 30 between the skin and subcutaneous tissue, which is then used to apply high frequency; and (2) a system with a main body 100 and handpiece 200 connected by connection line 110, where the handpiece 200 has a handle 210, insertion part 220, heating

member 230, and light-emitting member 250.. *See, e.g.,* Respondents' Jul. 10, 2023 Invalidity Contentions, Ex. D9 at 14-15. But Kang '395 discloses the system in the Korean patent document only uses the needle member 20 to get the wire member 30 into position and the allegedly innovative system uses no needle at all. *See, e.g.*, Kang '395 at 3-5, Fig. 2-5. There is no disclosure of any structure associated with a needle or relationship of them with any other structure. Thus Respondents' invalidity contentions fail to provide any evidence that Kang '395 discloses this claim limitation.

For example, Kang '395 does not disclose "one of the proximal end and the deployable needle assembly including at least one electrical conductor and the other including at least one restorably deflectable electrical contact couplable to the one of the proximal end and the deployable needle assembly at least one electrical conductor" as required by the Asserted Claims. *See* '536 Patent at cl. 11. Specifically, for this limitation, Respondents cite Kang '395 for (1) a system described in a Korean patent document with needle member 20 that is apparently used to stitch wire member 30 between the skin and subcutaneous tissue, which is then used to apply high frequency; and (2) a system with a main body 100 and handpiece 200 connected by connection line 110, where the handpiece 200 has a handle 210, insertion part 220, heating member 230, and light-emitting member 250. *See, e.g.,* Respondents' Jul. 10, 2023 Invalidity Contentions, Ex. D9 at 16-17. But Kang '395 discloses the system in the Korean patent document only uses the needle member 20 to get the wire member 30 into position and the allegedly innovative system uses no needle at all. *See, e.g.*, Kang '395 at 3-5, Fig. 2-5. There is no disclosure of any structure associated with a needle or relationship of them with any other structure. Thus Respondents' invalidity contentions fail to provide any evidence that Kang '395 discloses this claim limitation.

For example, Kang '395 does not disclose "a motor coupled to a plurality of extendable needles that causes the plurality of extendable needles to extend a desired distance from the needle assembly end surface when the motor is energized with a particular signal" as required by the Asserted Claims. *See* '536 Patent at cl. 11. Indeed, Respondents' invalidity contentions do not cite any evidence that Kang '395 discloses this limitation, instead just asserting, "To the extent this limitation is not explicitly or inherently disclosed by this reference, or rendered obvious by the references disclosed herein, it would have further been obvious given the knowledge of a person of ordinary skill in the art and/or other references disclosed and/or charted in Respondents' Invalidity Contentions, at least for the reasons set forth in these Contentions." *See, e.g.*, Respondents' Jul. 10, 2023, Ex. D9 at 17. Thus Respondents' invalidity contentions fail to provide any evidence that Kang '395 discloses this claim limitation.

For example, Kang '395 does not disclose "a signal generator electrically coupled to the plurality of extended needles to energize the plurality of extended needles" as required by the Asserted Claims. *See* '536 Patent at cl. 11. Specifically, for this limitation, Respondents cite Kang '395 for (1) a system described in a Korean patent document with needle member 20 that is apparently used to stitch wire member 30 between the skin and subcutaneous tissue, which is then used to apply high frequency; and (2) a system with a main body 100 and handpiece 200 connected by connection line 110, where the handpiece 200 has a handle 210, insertion part 220, heating member 230, and light-emitting member 250. *See, e.g.,* Respondents' Jul. 10, 2023 Invalidity Contentions, Ex. D9 at 17-18. But Kang '395 discloses the system in the Korean patent document only uses the needle member 20 to get the wire member 30 into position and the allegedly innovative system uses no needle at all. *See, e.g.*, Kang '395 at 3-5, Fig. 2-5. There is no disclosure of any structure

[redacted]

associated with a needle or relationship of them with any other structure. Thus Respondents' invalidity contentions fail to provide any evidence that Kang '395 discloses this claim limitation.

For example, Kang '395 does not disclose "wherein the proximal end includes the needle deploying motor, the motor including a draft shaft releasably couplable to the deployable needle assembly" as required by the Asserted Claims. *See* '536 Patent at cl. 13. Indeed, Respondents' invalidity contentions do not cite any evidence that Kang '395 discloses this limitation, instead just asserting, "To the extent this limitation is not explicitly or inherently disclosed by this reference, or rendered obvious by the references disclosed herein, it would have further been obvious given the knowledge of a person of ordinary skill in the art and/or other references disclosed and/or charted in Respondents' Invalidity Contentions, at least for the reasons set forth in these Contentions." *See, e.g.*, Respondents' Jul. 10, 2023, Ex. D9 at 19. Thus Respondents' invalidity contentions fail to provide any evidence that Kang '395 discloses this claim limitation.

For example, Kang '395 does not disclose "the wherein at least one restorably deflectable electrical contact includes a depressible pin" as required by the Asserted Claims. *See* '536 Patent at cl. 16. Indeed, Respondents' invalidity contentions do not cite any evidence that Kang '395 discloses this limitation, instead just asserting, "To the extent this limitation is not explicitly or inherently disclosed by this reference, or rendered obvious by the references disclosed herein, it would have further been obvious given the knowledge of a person of ordinary skill in the art and/or other references disclosed and/or charted in Respondents' Invalidity Contentions, at least for the reasons set forth in these Contentions." *See, e.g.*, Respondents' Jul. 10, 2023, Ex. D9 at 19. Invalidity Contentions, Ex. D9 at 20-21. Thus Respondents' invalidity contentions fail to provide any evidence that Kang '395 discloses this claim limitation.

For example, Kang '395 does not disclose "wherein a first deflectable electrical contact is coupled to a first plurality of the plurality of extendable needles and a second deflectable electrical contact is coupled to a second, different plurality of the plurality of extendable needles" as required by the Asserted Claims. *See* '536 Patent at cl. 17. Indeed, Respondents' invalidity contentions do not cite any evidence that Kang '395 discloses this limitation, instead just asserting, "To the extent this limitation is not explicitly or inherently disclosed by this reference, or rendered obvious by the references disclosed herein, it would have further been obvious given the knowledge of a person of ordinary skill in the art and/or other references disclosed and/or charted in Respondents' Invalidity Contentions, at least for the reasons set forth in these Contentions." *See, e.g.*, Respondents' Jul. 10, 2023, Ex. D9 at 19. Thus Respondents' invalidity contentions fail to provide any evidence that Kang '395 discloses this claim limitation.

For example, Kang '395 does not disclose "placing a user holdable device releasably couplable deployable needle module end surface on or near dermatological tissue to be treated, the user holdable device including a proximal end and the releasably couplable deployable needle module" as required by the Asserted Claims. *See* '812 Patent at cl. 1. Specifically, for this limitation, Respondents cite Kang '395 for (1) a system described in a Korean patent document with needle member 20 that is apparently used to stitch wire member 30 between the skin and subcutaneous tissue, which is then used to apply high frequency; and (2) a system with a main body 100 and handpiece 200 connected by connection line 110, where the handpiece 200 has a handle 210, insertion part 220, heating member 230, and light-emitting member 250.. *See, e.g.,* Respondents' Jul. 10, 2023 Invalidity Contentions, Ex. F10 at 2-4. But Kang '395 discloses the system in the Korean patent document only uses the needle member 20 to get the wire member 30 into position and the allegedly innovative system uses no needle at all. *See, e.g.*, Kang '395 at 3-5, Fig. 2-5.

[redacted]

There is no disclosure of any structure associated with a needle or relationship of them with any other structure. Thus Respondents' invalidity contentions fail to provide any evidence that Kang '395 discloses this claim limitation.

For example, Kang '395 does not disclose "the releasably couplable deployable needle module mechanically separatably from the user holdable device proximal end and including a needle assembly including a plurality of needles" as required by the Asserted Claims. *See* '812 Patent at cl. 1. Specifically, for this limitation, Respondents cite Kang '395 for (1) a system described in a Korean patent document with needle member 20 that is apparently used to stitch wire member 30 between the skin and subcutaneous tissue, which is then used to apply high frequency; and (2) a system with a main body 100 and handpiece 200 connected by connection line 110, where the handpiece 200 has a handle 210, insertion part 220, heating member 230, and light-emitting member 250. *See, e.g.,* Respondents' Jul. 10, 2023 Invalidity Contentions, Ex. F10 at 5. But Kang '395 discloses the system in the Korean patent document only uses the needle member 20 to get the wire member 30 into position and the allegedly innovative system uses no needle at all. *See, e.g.*, Kang '395 at 3-5, Fig. 2-5. There is no disclosure of any structure associated with a needle or relationship of them with any other structure. Thus Respondents' invalidity contentions fail to provide any evidence that Kang '395 discloses this claim limitation.

For example, Kang '395 does not disclose "the needle assembly movable within the releasably couplable deployable needle module to extend the plurality of needles from the releasably couplable deployable needle assembly end surface while at least one electrical contact of the needle assembly remains electrically coupled to at least one electrical contact of the user holdable device proximal end" as required by the Asserted Claims. *See* '812 Patent at cl. 1. Specifically, for this limitation, Respondents cite Kang '395 for (1) a system described in a Korean patent

[redacted]

document with needle member 20 that is apparently used to stitch wire member 30 between the skin and subcutaneous tissue, which is then used to apply high frequency; and (2) a system with a main body 100 and handpiece 200 connected by connection line 110, where the handpiece 200 has a handle 210, insertion part 220, heating member 230, and light-emitting member 250. *See, e.g.,* Respondents' Jul. 10, 2023 Invalidity Contentions, Ex. F10 at 5-6. But Kang '395 discloses the system in the Korean patent document only uses the needle member 20 to get the wire member 30 into position and the allegedly innovative system uses no needle at all. *See, e.g.*, Kang '395 at 3-5, Fig. 2-5. There is no disclosure of any structure associated with a needle or relationship of them with any other structure. Thus Respondents' invalidity contentions fail to provide any evidence that Kang '395 discloses this claim limitation.

For example, Kang '395 does not disclose "communicating electrical signals from the user holdable device proximal end to the needle assembly via the electrical contacts" as required by the Asserted Claims. *See* '812 Patent at cl. 1. Specifically, for this limitation, Respondents cite Kang '395 for (1) a system described in a Korean patent document with needle member 20 that is apparently used to stitch wire member 30 between the skin and subcutaneous tissue, which is then used to apply high frequency; and (2) a system with a main body 100 and handpiece 200 connected by connection line 110, where the handpiece 200 has a handle 210, insertion part 220, heating member 230, and light-emitting member 250. *See, e.g.,* Respondents' Jul. 10, 2023 Invalidity Contentions, Ex. F10 at 7. But Kang '395 discloses the system in the Korean patent document only uses the needle member 20 to get the wire member 30 into position and the allegedly innovative system uses no needle at all. *See, e.g.*, Kang '395 at 3-5, Fig. 2-5. Thus Respondents' invalidity contentions fail to provide any evidence that Kang '395 discloses this claim limitation.

For example, Kang '395 does not disclose does not disclose "energizing a motor coupled to the needle assembly to cause the plurality of the needles to extend a desired distance from the releasably couplable deployable needle module end surface," "further comprising energizing the plurality of needles via a signal generator electrically coupled to the user holdable device proximal end," "wherein the user holdable device proximal end further includes at least one embedded LED therein and further including energizing the at least one embedded LED so the at least one embedded LED illuminates the releasably couplable deployable needle module," and "wherein the needle assembly includes a translucent section and further including energizing the least one embedded LED to illuminate the plurality of needles via the needle assembly translucent section" as required by the Asserted Claims. *See* '812 Patent at cl. 5. Specifically, for this limitation, Respondents cite Kang '395 for (1) a system described in a Korean patent document with needle member 20 that is apparently used to stitch wire member 30 between the skin and subcutaneous tissue, which is then used to apply high frequency; and (2) a system with a main body 100 and handpiece 200 connected by connection line 110, where the handpiece 200 has a handle 210, insertion part 220, heating member 230, and light-emitting member 250. *See, e.g.,* Respondents' Jul. 10, 2023 Invalidity Contentions, Ex. F10 at 7-11. But Kang '395 does not specify if the light-emitting member 250 is an LED and Kang '395 also does not disclose embedding the light-emitting member 250 or anything connected to a structure associated with a needle because there is no needle at all in the alleged invention and the Korean document needle is used only to position wire member 200. *See, e.g.*, Kang '395 at 3-5, Fig. 2-5. Respondents also do not contend there is a motor disclosed in Kang '395. Respondents' Jul. 10, 2023 Invalidity Contentions, Ex. F10 at 7. Thus Respondents' invalidity contentions fail to provide any evidence that Kang '395 discloses these claim limitations.

For example, Kang '395 does not disclose "energizing a motor coupled to the needle assembly to cause the plurality of the needles to extend a desired distance from the releasably couplable deployable needle module end surface" and "further comprising energizing the motor to deploy the plurality of needles to a predetermined depth and directing the signal generator to energize the plurality of needles at a predetermined intensity for a predetermined duty cycle" as required by the Asserted Claims. *See* '812 Patent at cl. 6. Indeed, Respondents' invalidity contentions do not cite any evidence that Kang '395 discloses this limitation, instead just asserting, "To the extent this limitation is not explicitly or inherently disclosed by this reference, or rendered obvious by the references disclosed herein, it would have further been obvious given the knowledge of a person of ordinary skill in the art and/or other references disclosed and/or charted in Respondents' Invalidity Contentions, at least for the reasons set forth in these Contentions." *See, e.g.*, Respondents' Jul. 10, 2023 Invalidity Contentions, Ex. F10 at 11. Thus Respondents' invalidity contentions fail to provide any evidence that Kang '395 discloses these claim limitations.

For example, Kang '395 does not disclose "wherein a first electrical contact of the at least one electrical contact is electrically coupled to a first plurality of the plurality of needles and a second electrical contact of the at least one electrical contact is electrically coupled to a second, different plurality of the plurality of needles" as required by the Asserted Claims. *See* '812 Patent at cl. 10. Indeed, Respondents' invalidity contentions do not cite any evidence that Kang '395 discloses this limitation, instead just asserting, "To the extent this limitation is not explicitly or inherently disclosed by this reference, or rendered obvious by the references disclosed herein, it would have further been obvious given the knowledge of a person of ordinary skill in the art and/or other references disclosed and/or charted in Respondents' Invalidity Contentions, at least for the

reasons set forth in these Contentions." *See, e.g.*, Respondents' Jul. 10, 2023 Invalidity Contentions, Ex. F10 at 11. Thus Respondents' invalidity contentions fail to provide any evidence that Kang '395 discloses this claim limitation.

For example, Kang '395 does not disclose "a releasably couplable deployable needle module" as required by the Asserted Claims. *See* '812 Patent at cl. 12. Specifically, for this limitation, Respondents cite Kang '395 for (1) a system described in a Korean patent document with needle member 20 that is apparently used to stitch wire member 30 between the skin and subcutaneous tissue, which is then used to apply high frequency; and (2) a system with a main body 100 and handpiece 200 connected by connection line 110, where the handpiece 200 has a handle 210, insertion part 220, heating member 230, and light-emitting member 250. *See, e.g.,* Respondents' Jul. 10, 2023 Invalidity Contentions, Ex. F10 at 12-13. But Kang '395 discloses the system in the Korean patent document only uses the needle member 20 to get the wire member 30 into position and the allegedly innovative system uses no needle at all. *See, e.g.*, Kang '395 at 3-5, Fig. 2-5. There is no disclosure of any structure associated with a needle or relationship of them with any other structure. Thus Respondents' invalidity contentions fail to provide any evidence that Kang '395 discloses this claim limitation.

For example, Kang '395 does not disclose "the releasably couplable deployable needle module mechanically separatably from the user holdable device proximal end and including a needle assembly including a plurality of needles" as required by the Asserted Claims. *See* '812 Patent at cl. 12. Specifically, for this limitation, Respondents cite Kang '395 for (1) a system described in a Korean patent document with needle member 20 that is apparently used to stitch wire member 30 between the skin and subcutaneous tissue, which is then used to apply high frequency; and (2) a system with a main body 100 and handpiece 200 connected by connection line 110, where the

handpiece 200 has a handle 210, insertion part 220, heating member 230, and light-emitting member 250. *See, e.g.,* Respondents' Jul. 10, 2023 Invalidity Contentions, Ex. F10 at 13-14. But Kang '395 discloses the system in the Korean patent document only uses the needle member 20 to get the wire member 30 into position and the allegedly innovative system uses no needle at all. *See, e.g.*, Kang '395 at 3-5, Fig. 2-5. There is no disclosure of any structure associated with a needle or relationship of them with any other structure. Thus Respondents' invalidity contentions fail to provide any evidence that Kang '395 discloses this claim limitation.

For example, Kang '395 does not disclose "the needle assembly movable within the releasably couplable deployable needle module to extend the plurality of needles from the releasably couplable deployable needle assembly end surface while at least one electrical contact of the needle assembly remains electrically coupled to at least one electrical contact of the user holdable device proximal end" as required by the Asserted Claims. *See* '812 Patent at cl. 12. Specifically, for this limitation, Respondents cite Kang '395 for (1) a system described in a Korean patent document with needle member 20 that is apparently used to stitch wire member 30 between the skin and subcutaneous tissue, which is then used to apply high frequency; and (2) a system with a main body 100 and handpiece 200 connected by connection line 110, where the handpiece 200 has a handle 210, insertion part 220, heating member 230, and light-emitting member 250. *See, e.g.,* Respondents' Jul. 10, 2023 Invalidity Contentions, Ex. F10 at 14-15. But Kang '395 discloses the system in the Korean patent document only uses the needle member 20 to get the wire member 30 into position and the allegedly innovative system uses no needle at all. *See, e.g.*, Kang '395 at 3-5, Fig. 2-5. There is no disclosure of any structure associated with a needle or relationship of them with any other structure. Thus Respondents' invalidity contentions fail to provide any evidence that Kang '395 discloses this claim limitation.

For example, Kang '395 does not disclose "further including a motor coupled to the needle assembly to extend the plurality of needles a desired distance from the releasably couplable deployable needle assembly end surface when the motor is energized with a particular signal" as required by the Asserted Claims. *See* '812 Patent at cl. 13. Indeed, Respondents' invalidity contentions do not cite any evidence that Kang '395 discloses this limitation, instead just asserting, "To the extent this limitation is not explicitly or inherently disclosed by this reference, or rendered obvious by the references disclosed herein, it would have further been obvious given the knowledge of a person of ordinary skill in the art and/or other references disclosed and/or charted in Respondents' Invalidity Contentions, at least for the reasons set forth in these Contentions." *See, e.g.*, Respondents' Jul. 10, 2023 Invalidity Contentions, Ex. F10 at 15-16. Thus Respondents' invalidity contentions fail to provide any evidence that Kang '395 discloses this claim limitation.

For example, Kang '395 does not disclose "further including a signal generator electrically coupled to the user holdable device proximal end to energize the plurality of needles" as required by the Asserted Claims. *See* '812 Patent at cl. 14. Specifically, for this limitation, Respondents cite Kang '395 for (1) a system described in a Korean patent document with needle member 20 that is apparently used to stitch wire member 30 between the skin and subcutaneous tissue, which is then used to apply high frequency; and (2) a system with a main body 100 and handpiece 200 connected by connection line 110, where the handpiece 200 has a handle 210, insertion part 220, heating member 230, and light-emitting member 250. *See, e.g.,* Respondents' Jul. 10, 2023 Invalidity Contentions, Ex. F10 at 16-17. But Kang '395 discloses the system in the Korean patent document only uses the needle member 20 to get the wire member 30 into position and the allegedly innovative system uses no needle at all. *See, e.g.*, Kang '395 at 3-5, Fig. 2-5. There is no disclosure of any structure associated with a needle or relationship of them with any other structure.

Thus Respondents' invalidity contentions fail to provide any evidence that Kang '395 discloses this claim limitation.

For example, Kang '395 does not disclose "wherein the user holdable device proximal end includes the motor, the motor including a drive shaft releasably couplable to the needle assembly" as required by the Asserted Claims. *See* '812 Patent at cl. 16. Indeed, Respondents' invalidity contentions do not cite any evidence that Kang '395 discloses this limitation, instead just asserting, "To the extent this limitation is not explicitly or inherently disclosed by this reference, or rendered obvious by the references disclosed herein, it would have further been obvious given the knowledge of a person of ordinary skill in the art and/or other references disclosed and/or charted in Respondents' Invalidity Contentions, at least for the reasons set forth in these Contentions." *See, e.g.*, Respondents' Jul. 10, 2023 Invalidity Contentions, Ex. F10 at 17. Thus Respondents' invalidity contentions fail to provide any evidence that Kang '395 discloses this claim limitation.

For example, Kang '395 does not disclose "wherein the user holdable device proximal end further includes at least one embedded LED therein and the apparatus further including a photonic signal generator electrically coupled to the least one embedded LED, the at least one embedded LED capable of illuminating the needle assembly when energized" as required by the Asserted Claims. *See* '812 Patent at cl. 17. Specifically, for this limitation, Respondents cite Kang '395 for (1) a system described in a Korean patent document with needle member 20 that is apparently used to stitch wire member 30 between the skin and subcutaneous tissue, which is then used to apply high frequency; and (2) a system with a main body 100 and handpiece 200 connected by connection line 110, where the handpiece 200 has a handle 210, insertion part 220, heating member 230, and light-emitting member 250. *See, e.g.,* Respondents' Jul. 10, 2023 Invalidity Contentions, Ex. F10 at 17-18. But Kang '395 does not specify if the light-emitting member 250 is an LED and

Kang ’395 also does not disclose embedding the light-emitting member 250 or anything connected to a structure associated with a needle because there is no needle at all in the alleged invention and the Korean document needle is used only to position wire member 200. *See, e.g.*, Kang ’395 at 3-5, Fig. 2-5. Thus Respondents’ invalidity contentions fail to provide any evidence that Kang ‘395 discloses this claim limitation.

For example, Kang ‘395 does not disclose “wherein one of the at least one electrical contacts includes a pin that is extendable in the same direction as the plurality of needles” as required by the Asserted Claims. *See* ’812 Patent at cl. 18. Indeed, Respondents’ invalidity contentions do not cite any evidence that Kang ‘395 discloses this limitation, instead just asserting, “To the extent this limitation is not explicitly or inherently disclosed by this reference, or rendered obvious by the references disclosed herein, it would have further been obvious given the knowledge of a person of ordinary skill in the art and/or other references disclosed and/or charted in Respondents’ Invalidity Contentions, at least for the reasons set forth in these Contentions.” *See, e.g.*, Respondents’ Jul. 10, 2023 Invalidity Contentions, Ex. F10 at 18. Thus Respondents’ invalidity contentions fail to provide any evidence that Kang ‘395 discloses this claim limitation.

For example, Kang ‘395 does not disclose “wherein one of the user holdable device proximal end and the needle assembly includes at least two extendable electrical contacts and the other includes at least two electrical contacts couplable to the at least two extendable electrical contacts” as required by the Asserted Claims. *See* ’812 Patent at cl. 19. Indeed, Respondents’ invalidity contentions do not cite any evidence that Kang ‘395 discloses this limitation, instead just asserting, “To the extent this limitation is not explicitly or inherently disclosed by this reference, or rendered obvious by the references disclosed herein, it would have further been obvious given the knowledge of a person of ordinary skill in the art and/or other references disclosed and/or charted

in Respondents' Invalidity Contentions, at least for the reasons set forth in these Contentions." *See, e.g.*, Respondents' Jul. 10, 2023 Invalidity Contentions, Ex. F10 at 19. Thus Respondents' invalidity contentions fail to provide any evidence that Kang '395 discloses this claim limitation.

Respondents attempt to gap-fill these glaring deficiencies in Kang '395 through a broad brush statement for each limitation that "[t]o the extent this limitation is not explicitly or inherently disclosed by this reference, or rendered obvious by the references disclosed herein, it would have further been obvious given the knowledge of a person of ordinary skill in the art and/or other references disclosed and/or charted in Respondents' Invalidity Contentions." *See, e.g.,* Respondents' Jul. 10, 2023 Invalidity Contentions, Exs. D9 and F10 at *passim*. But Respondents' catch-all qualifications are inadequate to establish that any of the Asserted Claims are invalid. First, it is improper to rely on a person of skill's knowledge "as a wholesale substitute for reasoned analysis and evidentiary support, especially when dealing with a limitation missing from the prior art references specified." *Arendi S.A.R.L.*, 832 F.3d at 1362. Kang '395's deficiencies go to critical elements of the Asserted Claims that cannot be papered over with conclusory allegations about a POSITA's background knowledge. Second, as explained in the sections discussing Respondents' other invalidity charts, the other references Respondents try to combine with Kang '395 each themselves lack various limitations of the Asserted Claims.

Thus, Respondents have not established a *prima facie* case of anticipation or obviousness.

j. "Kang '487"

In Exhibits D10, E9, and F10, Respondents assert that

> The asserted claims of the ['536, '774, and '812 Patent] are invalid under 35 U.S.C. § 102 (AIA or pre-AIA) as anticipated by Kang '487, and/or are invalid under 35 U.S.C. § 103 (AIA or pre-AIA) as obvious in view of Kang '487 alone, or in combination with one or more other references identified herein and/or in Respondents' Invalidity Contentions, at least based on Respondents' understanding

[redacted]

> of Complainant's application of the asserted claims in an effort to show infringement.

Id. However, Respondents later served a Supplemental Identification of Prior Art to purportedly comply with the Ground Rules of identifying primary and secondary references for invalidity contentions. June 5, 2023 Respondents' Supplemental Identification of Prior Art at 1. Therein, Respondents declined to identify Kang '487 as part of any prior art invalidity ground. June 5, 2023 Respondents' Supplemental Identification of Prior Art, Exs. 1, 5, 6. The Respondents also did not identify Kang '487 as part of any prior art invalidity ground for the '536, '774, and '812 Patents in its final invalidity contentions. Respondents' Jul. 10, 2023 Invalidity Contentions, App. 5-7. Indeed, Respondents did not include an invalidity chart with respect to Kang '487. Thus, Respondents withdrew any prior art invalidity ground based whole or in part on Kang '487. To the extent Respondents are later permitted to rely on Kang '487, Serendia reserves the right to respond.

k. Exhibits D11, E10, and F11 ("Lee '500")

In Exhibits D11, E10, and F11, Respondents argue that "KR 10-0852500 ("Lee '500") qualifies as prior art under at least AIA 35 U.S.C. § 102(a)(1) because it is a patent that published before the filing of the earliest application to which the ['536, '774, and '812 Patents] could claim priority." *See* Respondents' Jul. 10, 2023 Invalidity Contentions, Exs. D11, E10, and F11. Respondents further argue that, "[t]o the extent that the '536 Patent is subject to pre-AIA law, Lee '500 qualifies as prior art under at least 35 U.S.C. § 102(b) (pre-AIA) because it is a patent that published more than one year before the filing of the earliest application to which the '536 Patent could claim priority." *Id*. Respondents then contend that:

> The asserted claims of the ['536, '774, and '812 Patents] are invalid under 35 U.S.C. § 102 (AIA or pre-AIA) as anticipated by Lee '500, and/or are invalid under 35 U.S.C. § 103 (AIA or pre-AIA) as obvious in view of Lee '500 alone, or in combination with one or more other references identified herein and/or in Respondents' Invalidity Contentions, at least based on Respondents' understanding of Complainant's application of the asserted claims in an effort to show infringement.

[redacted]

Id..

As discussed below, Lee ’500 does not anticipate or render obvious (either alone or in combination) the Asserted Claims of the ’536, ’774, and ’812 Patents.

For example, Lee ’500 does not disclose “placing a user holdable device releasably couplable deployable needle assembly end surface on or near dermatological tissue to be treated, the holdable device including a proximal end and the releasably couplable deployable needle assembly” as required by the Asserted Claims. *See* ’536 Patent at cl. 1. Specifically, for this limitation, Respondents cite Lee ’500 for needle assembly 11 and gun body 10. *See, e.g.,* Respondents’ Jul. 10, 2023 Invalidity Contentions, Ex. D11 at 3-9. But Lee ’500 does not disclose “user holdable device releasably couplable deployable needle assembly.” *See, e.g.*, Lee ’500 at ¶¶ 32, 33, Fig. 1. Thus Respondents’ invalidity contentions fail to provide any evidence that Lee ‘500 discloses this claim limitation.

For example, Lee ’500 does not disclose “the deployable needle assembly mechanically separatably from the proximal end and including a plurality of needles extendable from the deployable needle assembly end surface” as required by the Asserted Claims. *See* ’536 Patent at cl. 1. Specifically, for this limitation, Respondents cite Lee ’500 for needle assembly 11 and gun body 10. *See, e.g.,* Respondents’ Jul. 10, 2023 Invalidity Contentions, Ex. D11 at 9-10. But Lee ’500 discloses that needle assembly 11 is inserted inside of gun body 10 rather than mechanical separatable from the proximal end and it is only done by grooves. *See, e.g.*, Lee ’500 at ¶¶ 32, 33, Fig. 1. Thus Respondents’ invalidity contentions fail to provide any evidence that Lee ‘500 discloses this claim limitation.

For example, Lee ’500 does not disclose “one of the proximal end and the deployable needle assembly including at least one electrical conductor and the other including at least one

restorably deflectable electrical contact couplable to the one of the proximal end and the deployable needle assembly at least one electrical conductor" as required by the Asserted Claims. *See* '536 Patent at cl. 1. Specifically, for this limitation, Respondents cite Lee '500 for electrical plate 16 connected to electrode rod 15 that is part of the needle assembly 11. *See, e.g.,* Respondents' Jul. 10, 2023 Invalidity Contentions, Ex. D11 at 10-11. But Lee '500 does not describe any restorably deflectable electrical contact let alone if it is couplable. *See, e.g.*, Lee '500 at ¶¶ 35, 37. Thus Respondents' invalidity contentions fail to provide any evidence that Lee '500 discloses this claim limitation.

For example, Lee '500 does not disclose "wherein the proximal end further includes at least one embedded LED therein and further including energizing the LED when the signal generator is energized, the at least one embedded LED illuminating the deployable needle assembly when energized" as required by the Asserted Claims. *See* '536 Patent at cl. 4. Indeed, Respondents' invalidity contentions do not cite any evidence that Lee '500 discloses this limitation, instead just asserting, "To the extent this limitation is not explicitly or inherently disclosed by this reference, or rendered obvious by the references disclosed herein, it would have further been obvious given the knowledge of a person of ordinary skill in the art and/or other references disclosed and/or charted in Respondents' Invalidity Contentions, at least for the reasons set forth in these Contentions." *See, e.g*., Respondents' Jul. 10, 2023, Ex. D11 at 17. Thus Respondents' invalidity contentions fail to provide any evidence that Lee '500 discloses this claim limitation.

For example, Lee '500 does not disclose "wherein the releasably couplable deployable needle assembly includes a translucent section to communicate illumination from the least one embedded LED to the plurality of extendable needles" as required by the Asserted Claims. *See* '536 Patent at cl. 5. Indeed, Respondents' invalidity contentions do not cite any evidence that Lee

‘500 discloses this limitation, instead just asserting, “To the extent this limitation is not explicitly or inherently disclosed by this reference, or rendered obvious by the references disclosed herein, it would have further been obvious given the knowledge of a person of ordinary skill in the art and/or other references disclosed and/or charted in Respondents’ Invalidity Contentions, at least for the reasons set forth in these Contentions.” *See, e.g.*, Respondents’ Jul. 10, 2023, Ex. D11 at 17. Thus Respondents’ invalidity contentions fail to provide any evidence that Lee ‘500 discloses this claim limitation.

For example, Lee ’500 does not disclose “further comprising deploying the plurality of extendable needles to a predetermined depth and employing the signal generator to energize the plurality of extended needles to a predetermined intensity for a predetermined duty cycle” as required by the Asserted Claims. *See* ’536 Patent at cl. 9. Specifically, for this limitation, Respondents cite Lee ’500 for sending current to skin through the needles 21. *See, e.g.,* Respondents’ Jul. 10, 2023 Invalidity Contentions, Ex. D11 at 18-20. But Lee ’500 does not disclose any energization with a predetermined intensity or predetermined duty cycle. *See, e.g.*, Lee ’500 at ¶¶ 63-66. Thus Respondents’ invalidity contentions fail to provide any evidence that Lee ‘500 discloses this claim limitation.

For example, Lee ’500 does not disclose “a user holdable device including a proximal end and a releasably couplable deployable needle assembly” as required by the Asserted Claims. *See* ’536 Patent at cl. 11. Specifically, for this limitation, Respondents cite Lee ’500 for needle assembly 11 and gun body 10. *See, e.g.,* Respondents’ Jul. 10, 2023 Invalidity Contentions, Ex. D11 at 22-25. But Lee ’500 does not disclose “a user holdable device including a proximal end and a releasably couplable deployable needle assembly.” *See, e.g.*, Lee ’500 at ¶¶ 32, 33, Fig. 1. Thus

Respondents' invalidity contentions fail to provide any evidence that Lee '500 discloses this claim limitation.

For example, Lee '500 does not disclose "the deployable needle assembly mechanically separatably from the proximal end and including a plurality of extendable needles, a plurality of the extendable needles extendable from a deployable needle assembly end surface" as required by the Asserted Claims. *See* '536 Patent at cl. 11. Specifically, for this limitation, Respondents cite Lee '500 for needle assembly 11 and gun body 10. *See, e.g.,* Respondents' Jul. 10, 2023 Invalidity Contentions, Ex. D11 at 25-26. But Lee '500 discloses that needle assembly 11 is inserted inside of gun body 10 rather than mechanical separatable from the proximal end and it is only done by grooves. *See, e.g.*, Lee '500 at ¶¶ 32, 33, Fig. 1. Thus Respondents' invalidity contentions fail to provide any evidence that Lee '500 discloses this claim limitation.

For example, Lee '500 does not disclose "one of the proximal end and the deployable needle assembly including at least one electrical conductor and the other including at least one restorably deflectable electrical contact couplable to the one of the proximal end and the deployable needle assembly at least one electrical conductor" as required by the Asserted Claims. *See* '536 Patent at cl. 11. Specifically, for this limitation, Respondents cite Lee '500 for electrical plate 16 connected to electrode rod 15 that is part of the needle assembly 11. *See, e.g.,* Respondents' Jul. 10, 2023 Invalidity Contentions, Ex. D11 at 28-29. But Lee '500 does not describe any restorably deflectable electrical contact let alone if it is couplable. *See, e.g.*, Lee '500 at ¶¶ 35, 37. Thus Respondents' invalidity contentions fail to provide any evidence that Lee '500 discloses this claim limitation.

For example, Lee '500 does not disclose "wherein the proximal end includes the needle deploying motor, the motor including a draft shaft releasably couplable to the deployable needle

assembly" as required by the Asserted Claims. *See* '536 Patent at cl. 13. Specifically, for this limitation, Respondents cite Respondents cite Lee for actuator 12 being a motor to move the needles 21. *See, e.g.,* Respondents' Jul. 10, 2023 Invalidity Contentions, Ex. D11 at 32-36. But Lee '500 does not disclose a draft shaft as Lee '500 describes the motor as potentially being an air motor or motor than can control speed such as a servo motor an air motor or motor than can control speed such as a servo motor. *See, e.g.*, Lee '500 at ¶¶ 53, 55. Thus Respondents' invalidity contentions fail to provide any evidence that Lee '500 discloses this claim limitation.

For example, Lee '500 does not disclose "the wherein at least one restorably deflectable electrical contact includes a depressible pin" as required by the Asserted Claims. *See* '536 Patent at cl. 16. Specifically, for this limitation, Respondents cite Lee '500 for electrical plate 16 connected to electrode rod 15 that is part of the needle assembly 11. *See, e.g.,* Respondents' Jul. 10, 2023 Invalidity Contentions, Ex. D11 at 36-37. But Lee '500 does not describe any restorably deflectable electrical contact let alone if it is depressible pin. *See, e.g.*, Lee '500 at ¶¶ 35, 37. Thus Respondents' invalidity contentions fail to provide any evidence that Lee '500 discloses this claim limitation.

For example, Lee '500 does not disclose "wherein a first deflectable electrical contact is coupled to a first plurality of the plurality of extendable needles and a second deflectable electrical contact is coupled to a second, different plurality of the plurality of extendable needles" as required by the Asserted Claims. *See* '536 Patent at cl. 17. Specifically, for this limitation, Respondents cite Lee '500 for electrical plate 16 connected to electrode rod 15 that is part of the needle assembly 11. *See, e.g.,* Respondents' Jul. 10, 2023 Invalidity Contentions, Ex. D11 at 37-38. But Lee '500 does not describe any restorably deflectable electrical contact let alone if coupling information.

See, e.g., Lee '500 at ¶¶ 35, 37. Thus Respondents' invalidity contentions fail to provide any evidence that Lee '500 discloses this claim limitation.

For example, Lee '500 does not disclose "a signal generator electrically coupled to the plurality of extended needles to produce pulsed radio frequency signals across the plurality of needles to affect dermatological tissue near the plurality of needles" as required by the Asserted Claims. *See* '774 Patent at cl. 11. Specifically, for this limitation, Respondents cite Lee '500 for controller 14 to provide electric current for electrical stimulation during treatment. *See, e.g.,* Respondents' Jul. 10, 2023 Invalidity Contentions, Ex. E10 at 7-10. But Lee '500 does not disclose the electric current is pulsed RF or its impacts on dermatological tissue. *See, e.g.*, Lee '500 at ¶¶ 30, 31, 48, 51. Thus Respondents' invalidity contentions fail to provide any evidence that Lee '500 discloses this claim limitation.

For example, Lee '500 does not disclose "wherein the device includes an end surface configured to be placed on or near dermatological tissue to be treated, the end surface including a plurality of needles extendable a desired distance from the end surface" as required by the Asserted Claims. *See* '774 Patent at cl. 12. Specifically, for this limitation, Respondents cite Lee '500 for actuator 12 moving needle assembly 11 with needles and connector housing 13 back and forth. *See, e.g.,* Respondents' Jul. 10, 2023 Invalidity Contentions, Ex. E10 at 10-15. But Lee '500 discloses the needles 21 moving back and forth outside of an end surface of a device such that the needles 21 do not extend from the end surface. *See, e.g.*, Lee '500 at ¶¶ 52-56, Fig. 3a, 3b. Thus Respondents' invalidity contentions fail to provide any evidence that Lee '500 discloses this claim limitation.

For example, Lee '500 does not disclose "further including a mechanism for causing the plurality of the extendable needles to extend a desired distance from the end surface" as required

by the Asserted Claims. *See* '774 Patent at cl. 13. Specifically, for this limitation, Respondents cite Lee '500 for actuator 12 moving needle assembly 11 with needles and connector housing 13 back and forth. *See, e.g.,* Respondents' Jul. 10, 2023 Invalidity Contentions, Ex. E10 at 15-17. But Lee '500 discloses the needles 21 moving back and forth outside of an end surface of a device such that the needles 21 do not extend from the end surface. *See, e.g.*, Lee '500 at ¶¶ 52-56, Fig. 3a, 3b. Thus Respondents' invalidity contentions fail to provide any evidence that Lee '500 discloses this claim limitation.

For example, Lee '500 does not disclose "further including a motor coupled to the plurality of extendable needles that may be directed to cause the plurality of the extendable needles to extend a desired distance from the end surface," as required by the Asserted Claims. *See* '774 Patent at cl. 14. Specifically, for this limitation, Respondents cite Lee '500 for actuator 12 moving needle assembly 11 with needles and connector housing 13 back and forth. *See, e.g.,* Respondents' Jul. 10, 2023 Invalidity Contentions, Ex. E10 at 37-38. But Lee '500 discloses the needles 21 moving back and forth outside of an end surface of a device such that the needles 21 do not extend from the end surface and the motor itself does not extend the needles a desired distance. *See, e.g.*, Lee '500 at ¶¶ 52-56, Fig. 3a, 3b. Thus Respondents' invalidity contentions fail to provide any evidence that Lee '500 discloses this claim limitation.

For example, Lee '500 does not disclose "placing a user holdable device releasably couplable deployable needle module end surface on or near dermatological tissue to be treated, the user holdable device including a proximal end and the releasably couplable deployable needle module" as required by the Asserted Claims. *See* '812 Patent at cl. 1. Specifically, for this limitation, Respondents cite Lee '500 for needle assembly 11 and gun body 10. *See, e.g.,* Respondents' Jul. 10, 2023 Invalidity Contentions, Ex. F11 at 3-9. But Lee '500 does not disclose "the user

holdable device including a proximal end and the releasably couplable deployable needle module." *See, e.g.*, Lee '500 at ¶¶ 32, 33, Fig. 1. Thus Respondents' invalidity contentions fail to provide any evidence that Lee '500 discloses this claim limitation.

For example, Lee '500 does not disclose "the releasably couplable deployable needle module mechanically separatably from the user holdable device proximal end and including a needle assembly including a plurality of needles" as required by the Asserted Claims. *See* '812 Patent at cl. 1. Specifically, for this limitation, Respondents cite Lee '500 for needle assembly 11 and gun body 10. *See, e.g.,* Respondents' Jul. 10, 2023 Invalidity Contentions, Ex. F11 at 9-13. But Lee '500 discloses that needle assembly 11 is inserted inside of gun body 10 and is not disclosed as mechanical separatable from the proximal end. *See, e.g.*, Lee '500 at ¶¶ 32, 33, Fig. 1. Thus Respondents' invalidity contentions fail to provide any evidence that Lee '500 discloses this claim limitation.

For example, Lee '500 does not disclose "the needle assembly movable within the releasably couplable deployable needle module to extend the plurality of needles from the releasably couplable deployable needle assembly end surface while at least one electrical contact of the needle assembly remains electrically coupled to at least one electrical contact of the user holdable device proximal end" as required by the Asserted Claims. *See* '812 Patent at cl. 1. Specifically, for this limitation, Respondents cite Lee '500 for electrical plate 16 connected to electrode rod 15 that is part of the needle assembly 11. *See, e.g.,* Respondents' Jul. 10, 2023 Invalidity Contentions, Ex. F11 at 13-15. But Lee '500 discloses no information about needle assembly 11 or associated components as connected to gun body 10, and thus is not disclosed as mechanical separatable from the proximal end. *See, e.g.*, Lee '500 at ¶¶ 32, 33, Fig. 1. Thus Respondents' invalidity contentions fail to provide any evidence that Lee '500 discloses this claim limitation.

For example, Lee ’500 does not disclose “energizing a motor coupled to the needle assembly to cause the plurality of the needles to extend a desired distance from the releasably couplable deployable needle module end surface,” “further comprising energizing the plurality of needles via a signal generator electrically coupled to the user holdable device proximal end,” “wherein the user holdable device proximal end further includes at least one embedded LED therein and further including energizing the at least one embedded LED so the at least one embedded LED illuminates the releasably couplable deployable needle module,” and “wherein the needle assembly includes a translucent section and further including energizing the least one embedded LED to illuminate the plurality of needles via the needle assembly translucent section” as required by the Asserted Claims. *See* ’812 Patent at cl. 5. Respondents’ invalidity contentions do not cite any evidence that Lee ’500 discloses this limitation relating LEDs. *See, e.g.*, Respondents’ Jul. 10, 2023 Invalidity Contentions, Ex. F11 at 20. Lee ’500 discloses the motor itself does not extend the needles a desired distance. *See, e.g.*, Lee ’500 at ¶¶ 52-56, Fig. 3a, 3b. Thus Respondents’ invalidity contentions fail to provide any evidence that Lee ‘500 discloses these claim limitations.

For example, Lee ’500 does not disclose “energizing a motor coupled to the needle assembly to cause the plurality of the needles to extend a desired distance from the releasably couplable deployable needle module end surface” and “further comprising energizing the motor to deploy the plurality of needles to a predetermined depth and directing the signal generator to energize the plurality of needles at a predetermined intensity for a predetermined duty cycle” as required by the Asserted Claims. *See* ’812 Patent at cl. 6. Specifically, for this limitation, Respondents cite Lee ’500 for sending current to skin through the needles 21. *See, e.g.,* Respondents’ Jul. 10, 2023 Invalidity Contentions, Ex. F11 at 20-23. But Lee ’500 does not disclose any energization with a predetermined intensity or predetermined duty cycle. *See, e.g.*, Lee ’500 at ¶¶ 63-66. Lee ’500

discloses the motor itself does not extend the needles a desired distance. *See, e.g.*, Lee '500 at ¶¶ 52-56, Fig. 3a, 3b. Thus Respondents' invalidity contentions fail to provide any evidence that Lee '500 discloses these claim limitations.

For example, Lee '500 does not disclose "wherein a first electrical contact of the at least one electrical contact is electrically coupled to a first plurality of the plurality of needles and a second electrical contact of the at least one electrical contact is electrically coupled to a second, different plurality of the plurality of needles" as required by the Asserted Claims. *See* '812 Patent at cl. 10. Indeed, Respondents' invalidity contentions do not cite any evidence that Lee '500 discloses this limitation, instead just asserting that "[t]o the extent this limitation is not explicitly or inherently disclosed by this reference, or rendered obvious by the references disclosed herein, it would have further been obvious given the knowledge of a person of ordinary skill in the art and/or other references disclosed and/or charted in Respondents' Invalidity Contentions, at least for the reasons set forth in these Contentions." *See, e.g.*, Respondents' Jul. 10, 2023 Invalidity Contentions, Ex. F11 at 23-24. Thus Respondents' invalidity contentions fail to provide any evidence that Lee '500 discloses this claim limitation.

For example, Lee '500 does not disclose "a user holdable device including a proximal end and a releasably couplable deployable needle module" as required by the Asserted Claims. *See* '812 Patent at cl. 12. Specifically, for this limitation, Respondents cite Lee '500 for needle assembly 11 and gun body 10. *See, e.g.,* Respondents' Jul. 10, 2023 Invalidity Contentions, Ex. F11 at 25-27. But Lee '500 does not disclose "a user holdable device including a proximal end and a releasably couplable deployable needle module." *See, e.g.*, Lee '500 at ¶¶ 32, 33, Fig. 1. Thus Respondents' invalidity contentions fail to provide any evidence that Lee '500 discloses this claim limitation.

For example, Lee ’500 does not disclose “the releasably couplable deployable needle module mechanically separatably from the user holdable device proximal end and including a needle assembly including a plurality of needles” as required by the Asserted Claims. *See* ’812 Patent at cl. 12. Specifically, for this limitation, Respondents cite Lee ’500 for needle assembly 11 and gun body 10. *See, e.g.,* Respondents’ Jul. 10, 2023 Invalidity Contentions, Ex. F11 at 27-31. But Lee ’500 provides that needle assembly 11 or associated components are not user holdable components, and indeed cannot be so, when the system is in use. *See, e.g.*, Lee ’500 at ¶¶ 32, 33, Fig. 1. Lee ’500 discloses that needle assembly 11 is inserted inside of gun body 10 and provides scant information on connection of guide 19. *See, e.g.*, Lee ’500 at ¶¶ 32, 33, Fig. 1. Both are not disclosed as mechanical separatable from the proximal end. Thus Respondents’ invalidity contentions fail to provide any evidence that Lee ‘500 discloses this claim limitation.

For example, Lee ’500 does not disclose “further including a motor coupled to the needle assembly to extend the plurality of needles a desired distance from the releasably couplable deployable needle assembly end surface when the motor is energized with a particular signal” as required by the Asserted Claims. *See* ’812 Patent at cl. 13. Specifically, for this limitation, Respondents cite Lee ’500 for needle assembly 11 and actuator 12. *See, e.g.,* Respondents’ Jul. 10, 2023 Invalidity Contentions, Ex. F11 at 33-34. But Lee ’500 provides a “depth adjustment guide” rather than the motor setting the distance the plurality of needles protrude from the device. *See, e.g.*, Lee ’500 at ¶¶ 43, 44 33, Fig. 1. Thus Respondents’ invalidity contentions fail to provide any evidence that Lee ‘500 discloses this claim limitation.

For example, Lee ’500 does not disclose “wherein the user holdable device proximal end includes the motor, the motor including a drive shaft releasably couplable to the needle assembly” as required by the Asserted Claims. *See* ’812 Patent at cl. 16. Specifically, for this limitation,

Respondents cite Lee for actuator 12 being a motor to move the needles 21. *See, e.g.,* Respondents' Jul. 10, 2023 Invalidity Contentions, Ex. F11 at 37-40. But Lee '500 does not disclose a drive shaft as Lee '500 describes the motor as potentially being an air motor or motor than can control speed such as a servo motor. *See, e.g.*, Lee '500 at ¶¶ 53, 55. Lee '500 also does not disclose how a "needle assembly" is releasably couplable to a drive shaft. Thus Respondents' invalidity contentions fail to provide any evidence that Lee '500 discloses this claim limitation.

For example, Lee '500 does not disclose "wherein the user holdable device proximal end further includes at least one embedded LED therein and the apparatus further including a photonic signal generator electrically coupled to the least one embedded LED, the at least one embedded LED capable of illuminating the needle assembly when energized" as required by the Asserted Claims. *See* '812 Patent at cl. 17. Indeed, Respondents' invalidity contentions do not cite any evidence that Lee '500 discloses this limitation, instead just asserting, "To the extent this limitation is not explicitly or inherently disclosed by this reference, or rendered obvious by the references disclosed herein, it would have further been obvious given the knowledge of a person of ordinary skill in the art and/or other references disclosed and/or charted in Respondents' Invalidity Contentions, at least for the reasons set forth in these Contentions." *See, e.g.*, Respondents' Jul. 10, 2023 Invalidity Contentions, Ex. F11 at 40. Thus Respondents' invalidity contentions fail to provide any evidence that Lee '500 discloses this claim limitation.

For example, Lee '500 does not disclose "wherein one of the at least one electrical contacts includes a pin that is extendable in the same direction as the plurality of needles" as required by the Asserted Claims. *See* '812 Patent at cl. 18. Specifically, for this limitation, Respondents cite Lee '500 for electrical plate 16 connected to electrode rod 15 that is part of the needle assembly 11. *See, e.g.,* Respondents' Jul. 10, 2023 Invalidity Contentions, Ex. F11 at 41-43. But Lee does

not disclose electrode rod 15 is extendable. *See, e.g.*, Lee '500 at ¶¶ 35, 37. Thus Respondents' invalidity contentions fail to provide any evidence that Lee '500 discloses this claim limitation.

For example, Lee '500 does not disclose "wherein one of the user holdable device proximal end and the needle assembly includes at least two extendable electrical contacts and the other includes at least two electrical contacts couplable to the at least two extendable electrical contacts" as required by the Asserted Claims. *See* '812 Patent at cl. 19. Specifically, for this limitation, Respondents cite Lee '500 for electrical plate 16 connected to electrode rod 15 that is part of the needle assembly 11. *See, e.g.,* Respondents' Jul. 10, 2023 Invalidity Contentions, Ex. F11 at 43-45. But Lee does not disclose electrode rod 15 is extendable or many more electrical connections other than electric plate 16 to needles 21 through electrode rod 15. *See, e.g.*, Lee '500 at ¶¶ 35, 37. Thus Respondents' invalidity contentions fail to provide any evidence that Lee '500 discloses this claim limitation.

Respondents attempt to gap-fill these glaring deficiencies in Lee '500 through a broad brush statement for each limitation that "[t]o the extent this limitation is not explicitly or inherently disclosed by this reference, or rendered obvious by the references disclosed herein, it would have further been obvious given the knowledge of a person of ordinary skill in the art and/or other references disclosed and/or charted in Respondents' Invalidity Contentions." *See, e.g.,* Respondents' Jul. 10, 2023 Invalidity Contentions, Exs. D11, E10, and F11 at *passim*. But Respondents' catch-all qualifications are inadequate to establish that any of the Asserted Claims are invalid. First, it is improper to rely on a person of skill's knowledge "as a wholesale substitute for reasoned analysis and evidentiary support, especially when dealing with a limitation missing from the prior art references specified." *Arendi S.A.R.L.*, 832 F.3d at 1362. Lee '500's deficiencies go to critical elements of the Asserted Claims that cannot be papered over with conclusory allegations about a

[redacted]

POSITA's background knowledge. Second, as explained in the sections discussing Respondents' other invalidity charts, the other references Respondents try to combine with Lee '500 each themselves lack various limitations of the Asserted Claims.

Thus, Respondents have not established a *prima facie* case of anticipation or obviousness.

l. "Lee '552"

In Exhibits D12, E11, and F12 to Respondents' May 24, 2023 Invalidity Contentions, Respondents assert that

> The asserted claims of the ['536, '774, and '812 Patent] are invalid under 35 U.S.C. § 102 (AIA or pre-AIA) as anticipated by Lee '552, and/or are invalid under 35 U.S.C. § 103 (AIA or pre-AIA) as obvious in view of Lee '552 alone, or in combination with one or more other references identified herein and/or in Respondents' Invalidity Contentions, at least based on Respondents' understanding of Complainant's application of the asserted claims in an effort to show infringement.

Respondents' May 24, 2023 Invalidity Contentions, Exs. D12, E11, and F12 at 1 However, Respondents later served a Supplemental Identification of Prior Art to purportedly comply with the Ground Rules of identifying primary and secondary references for invalidity contentions. June 5, 2023 Respondents' Supplemental Identification of Prior Art at 1. Therein, Respondents declined to identify Lee '552 as part of any prior art invalidity ground. June 5, 2023 Respondents' Supplemental Identification of Prior Art, Exs. 1, 5, 6. The Respondents also did not identify Lee '552 as part of any prior art invalidity ground for the '536, '774, and '812 Patents in its final invalidity contentions. Respondents' Jul. 10, 2023 Invalidity Contentions, App. 5-7. Indeed, Respondents did not include an invalidity chart with respect to Lee '552. Thus, Respondents withdrew any prior art invalidity ground based whole or in part on Lee '552. To the extent Respondents are later permitted to rely on Lee '552, Serendia reserves the right to respond.

m. Exhibits D13, E12, and F13 ("Livneh")

In Exhibits D13, E12, and F13, Respondents argue that "WO 2008/005477 A2 ("Livneh") qualifies as prior art under at least AIA 35 U.S.C. § 102(a)(1) because it is an international publication that published before the filing of the earliest application to which the ['536, '774, and '812 Patents] could claim priority." *See* Respondents' Jul. 10, 2023 Invalidity Contentions, Exs. D13, E12, and F13. Respondents further argue that, "[t]o the extent that the ['536, '774, and '812 Patents are] subject to pre-AIA law, Livneh qualifies as prior art under at least 35 U.S.C. § 102(b) (pre-AIA) because it is an international publication that published more than one year before the filing of the earliest application to which the ['536, '774, and '812 Patents] could claim priority. Livneh also qualifies as prior art under at least 35 U.S.C. § 102(a) (pre-AIA) because it is an international publication that was published prior to the alleged invention of the ['536, '774, and '812 Patents]." *Id.* Respondents then contend that:

> The asserted claims of the ['536, '774, and '812 Patents] are invalid under 35 U.S.C. § 102 (AIA or pre-AIA) as anticipated by Livneh, and/or are invalid under 35 U.S.C. § 103 (AIA or pre-AIA) as obvious in view of Livneh alone, or in combination with one or more other references identified herein and/or in Respondents' Invalidity Contentions, at least based on Respondents' understanding of Complainant's application of the asserted claims in an effort to show infringement.

Id..

As discussed below, Livneh does not anticipate or render obvious (either alone or in combination) the Asserted Claims of the '536, '774, and '812 Patents.

For example, Livneh does not disclose "placing a user holdable device releasably couplable deployable needle assembly end surface on or near dermatological tissue to be treated, the holdable device including a proximal end and the releasably couplable deployable needle assembly" as required by the Asserted Claims. *See* '536 Patent at cl. 1. Specifically, for this limitation, Respondents cite Livneh Fig. 19 with a curved block 128 with electrodes 32 in a housing 36 that is connected to a handle portion 38 with a mechanism 74 that is slideable to push down the curved block

128. *See, e.g.,* Respondents' Jul. 10, 2023 Invalidity Contentions, Ex. D13 at 4-8. But Livneh provides no information of what, if any, parts of Fig. 19 or any other embodiment is "releasably couplable," including any portion that may be considered a needle assembly. *See, e.g.*, Livneh at ¶¶ 54, 64, Fig. 19. Thus Respondents' invalidity contentions fail to provide any evidence that Livneh discloses this claim limitation.

For example, Livneh does not disclose "the deployable needle assembly mechanically separatably from the proximal end and including a plurality of needles extendable from the deployable needle assembly end surface" as required by the Asserted Claims. *See* '536 Patent at cl. 1. Specifically, for this limitation, Respondents cite Livneh for the Fig. 19 embodiment and electrodes being driven into the skin at a perpendicular direction. *See, e.g.,* Respondents' Jul. 10, 2023 Invalidity Contentions, Ex. D13 at 8-11. But Livneh provides no information of what, if any, parts of Fig. 19 or any other embodiment are "mechanically separatable," including any portion that may be considered a needle assembly or proximal end. *See, e.g.*, Livneh at ¶¶ 35, 54, 64, Fig. 19. Thus Respondents' invalidity contentions fail to provide any evidence that Livneh discloses this claim limitation.

For example, Livneh does not disclose "one of the proximal end and the deployable needle assembly including at least one electrical conductor and the other including at least one restorably deflectable electrical contact couplable to the one of the proximal end and the deployable needle assembly at least one electrical conductor" as required by the Asserted Claims. *See* '536 Patent at cl. 1. Specifically, for this limitation, Respondents cite Livneh for its block 128 in one embodiment and a wire 51 and a coil 92 of another embodiment. *See, e.g.,* Respondents' Jul. 10, 2023 Invalidity Contentions, Ex. D13 at 11-14. But Livneh provides insufficient information to disclose this limitation as block 128 is not described as a conductor and there is scant description of the wire 51

and coil 92, which do not disclose this limitation. *See, e.g.*, Livneh at ¶¶ 49, 64. Thus Respondents' invalidity contentions fail to provide any evidence that Livneh discloses this claim limitation.

For example, Livneh does not disclose "communicating electrical signals from the proximal end to the plurality of the extendable needles" as required by the Asserted Claims. *See* '536 Patent at cl. 1. Specifically, for this limitation, Respondents cite Livneh for a power supply connected to handle unit that provides electrical current to electrodes 32, including using the coil 92 and the wire 51, in certain embodiments. *See, e.g.,* Respondents' Jul. 10, 2023 Invalidity Contentions, Ex. D13 at 14-18. But Livneh does not disclose whether the electrical current provided to the electrodes 32 come from the proximal end. *See, e.g.*, Livneh at ¶¶ 35, 37, 41, 49, 63, 64. Thus Respondents' invalidity contentions fail to provide any evidence that Livneh discloses this claim limitation.

For example, Livneh does not disclose "energizing a motor coupled to a plurality of extendable needles to cause a plurality of the extendable needles to extend a desired distance from the needle assembly end surface" as required by the Asserted Claims. *See* '536 Patent at cl. 1. Specifically, for this limitation, Respondents cite Livneh for the mechanism 74 for "operatively engaging the electrodes 32" where it may be automatically powered by a motor. *See, e.g.,* Respondents' Jul. 10, 2023 Invalidity Contentions, Ex. D13 at 18-19. But Livneh provides no details about the motor causing extendable needles to extend a desired distance. *See, e.g.*, Livneh at ¶ 45. Thus Respondents' invalidity contentions fail to provide any evidence that Livneh discloses this claim limitation.

For example, Livneh does not disclose "wherein the proximal end further includes at least one embedded LED therein and further including energizing the LED when the signal generator is energized, the at least one embedded LED illuminating the deployable needle assembly when

energized" as required by the Asserted Claims. *See* '536 Patent at cl. 4. Specifically, for this limitation, Respondents cite Livneh for a pushbutton 105 that may be a LED. *See, e.g.,* Respondents' Jul. 10, 2023 Invalidity Contentions, Ex. D13 at 24-26. But Livneh discloses the pushbutton 105 is used for "controlling operation of the apparatus 30," such as power, application of vacuum, application of coolant, and energization of electrodes 32. Livneh at ¶ 53. Livneh does not disclose embedding an LED (indeed it is not shown in any figure), energizing the LED in any way, or the LED illuminating anything. *See, e.g.*, Livneh at ¶ 53. Thus Respondents' invalidity contentions fail to provide any evidence that Livneh discloses this claim limitation.

For example, Livneh does not disclose "wherein the releasably couplable deployable needle assembly includes a translucent section to communicate illumination from the least one embedded LED to the plurality of extendable needles" as required by the Asserted Claims. *See* '536 Patent at cl. 5. Specifically, for this limitation, Respondents cite Livneh for a pushbutton 105 that may be a LED. *See, e.g.,* Respondents' Jul. 10, 2023 Invalidity Contentions, Ex. D13 at 26-28. But Livneh discloses the pushbutton 105 is used for "controlling operation of the apparatus 30," such as power, application of vacuum, application of coolant, and energization of electrodes 32. Livneh at ¶ 53. Livneh provides no information of what, if any, parts of Fig. 19 or any other embodiment is "releasably couplable," including any portion that may be considered a needle assembly, discloses components of the housing 36 being made of plastic with no further disclosure that they would be translucent, and gives almost no information of the LED pushbutton 105, e.g., location, operating parameters, effect. *See, e.g.*, Livneh at ¶ 33. Thus Respondents' invalidity contentions fail to provide any evidence that Livneh discloses this claim limitation.

For example, Livneh does not disclose "further comprising deploying the plurality of extendable needles to a predetermined depth and employing the signal generator to energize the

plurality of extended needles to a predetermined intensity for a predetermined duty cycle" as required by the Asserted Claims. *See* '536 Patent at cl. 9. Specifically, for this limitation, Respondents cite Livneh for this limitation. *See, e.g.,* Respondents' Jul. 10, 2023 Invalidity Contentions, Ex. D13 at 28-32. But Livneh provides no information about intensity or duty cycles, including whether they are predetermined—indeed it provides next to no information about the parameters to apply RF through electrodes—and does not disclose deploying extendable needles to a predetermined depth. *See, e.g.*, Livneh at ¶¶ 37, 39. Thus Respondents' invalidity contentions fail to provide any evidence that Livneh discloses this claim limitation.

For example, Livneh does not disclose "a user holdable device including a proximal end and a releasably couplable deployable needle assembly" as required by the Asserted Claims. *See* '536 Patent at cl. 11. Specifically, for this limitation, Respondents cite Livneh for information about the electrode 32. *See, e.g.,* Respondents' Jul. 10, 2023 Invalidity Contentions, Ex. D13 at 35-37. But Livneh provides no information of what, if any, of any embodiment is "releasably couplable," including any portion that may be considered a needle assembly. *See, e.g.*, Livneh at ¶¶ 33, 34, 54, 64. Thus Respondents' invalidity contentions fail to provide any evidence that Livneh discloses this claim limitation.

For example, Livneh does not disclose "the deployable needle assembly mechanically separatably from the proximal end and including a plurality of extendable needles, a plurality of the extendable needles extendable from a deployable needle assembly end surface" as required by the Asserted Claims. *See* '536 Patent at cl. 11. Specifically, for this limitation, Respondents cite Livneh Fig. 19. *See, e.g.,* Respondents' Jul. 10, 2023 Invalidity Contentions, Ex. D13 at 37-3943. But Livneh provides no information of what, if any, of any embodiment "mechanically separable," including any portion that may be considered a deployable needle assembly. *See, e.g.*, Livneh at

¶¶ 33, 34, 54, 64, Fig. 19. Thus Respondents' invalidity contentions fail to provide any evidence that Livneh discloses this claim limitation.

For example, Livneh does not disclose "one of the proximal end and the deployable needle assembly including at least one electrical conductor and the other including at least one restorably deflectable electrical contact couplable to the one of the proximal end and the deployable needle assembly at least one electrical conductor" as required by the Asserted Claims. *See* '536 Patent at cl. 11. Specifically, for this limitation, Respondents cite Livneh for its block 128 in one embodiment and a wire 51 and a coil 92 of another embodiment. *See, e.g.,* Respondents' Jul. 10, 2023 Invalidity Contentions, Ex. D13 at 39-42. But Livneh provides insufficient information to disclose this limitation as block 128 is not described as a conductor and there is scant description of the wire 51 and coil 92, which do not disclose this limitation. *See, e.g.*, Livneh at ¶¶ 49, 64. Thus Respondents' invalidity contentions fail to provide any evidence that Livneh discloses this claim limitation.

For example, Livneh does not disclose "a motor coupled to a plurality of extendable needles that causes the plurality of extendable needles to extend a desired distance from the needle assembly end surface when the motor is energized with a particular signal" as required by the Asserted Claims. *See* '536 Patent at cl. 11. Specifically, for this limitation, Respondents cite Livneh for the mechanism 74 for "operatively engaging the electrodes 32" where it may be automatically powered by a motor. *See, e.g.,* Respondents' Jul. 10, 2023 Invalidity Contentions, Ex. D13 at 42-45. But Livneh provides no details about the motor causing extendable needles to extend a desired distance. *See, e.g.*, Livneh at ¶ 45. Thus Respondents' invalidity contentions fail to provide any evidence that Livneh discloses this claim limitation.

For example, Livneh does not disclose "wherein the proximal end includes the needle deploying motor, the motor including a draft shaft releasably couplable to the deployable needle assembly" as required by the Asserted Claims. *See* '536 Patent at cl. 13. Specifically, for this limitation, Respondents cite Livneh for the mechanism 74 for "operatively engaging the electrodes 32" where it may be automatically powered by a motor. *See, e.g.,* Respondents' Jul. 10, 2023 Invalidity Contentions, Ex. D13 at 46-48. But Livneh provides no details about the motor, such as where it is located, whether it has a draft shaft, or whether a draft shaft, if disclosed, is couplable to anything. *See, e.g.*, Livneh at ¶ 45. Livneh provides no information of what, if any, of any embodiment is "releasably couplable," including any portion that may be considered a needle assembly. *See, e.g.*, Livneh at ¶¶ 33, 34, 54, 64. Thus Respondents' invalidity contentions fail to provide any evidence that Livneh discloses this claim limitation.

For example, Livneh does not disclose "the wherein at least one restorably deflectable electrical contact includes a depressible pin" as required by the Asserted Claims. *See* '536 Patent at cl. 16. Specifically, for this limitation, Respondents cite Livneh for its block 128 in one embodiment and a wire 51 and a coil 92 of another embodiment. *See, e.g.,* Respondents' Jul. 10, 2023 Invalidity Contentions, Ex. D13 at 48-50. But Livneh provides insufficient information to disclose this limitation as block 128 is not described as a conductor and there is scant description of the wire 51 and coil 92, which do not disclose this limitation. *See, e.g.*, Livneh at ¶¶ 49, 64. Thus Respondents' invalidity contentions fail to provide any evidence that Livneh discloses this claim limitation.

For example, Livneh does not disclose "wherein a first deflectable electrical contact is coupled to a first plurality of the plurality of extendable needles and a second deflectable electrical contact is coupled to a second, different plurality of the plurality of extendable needles" as required

by the Asserted Claims. *See* '536 Patent at cl. 17. Specifically, for this limitation, Respondents cite Livneh for its block 128 in one embodiment and a wire 51 and a coil 92 of another embodiment. *See, e.g.,* Respondents' Jul. 10, 2023 Invalidity Contentions, Ex. D13 at 50-52. But Livneh provides insufficient information to disclose this limitation as block 128 is not described as a conductor and there is scant description of the wire 51 and coil 92, which do not disclose this limitation. *See, e.g.*, Livneh at ¶¶ 49, 64. Indeed, there is no disclosure of a deflectable electrical contact. Thus Respondents' invalidity contentions fail to provide any evidence that Livneh discloses this claim limitation.

For example, Livneh does not disclose "a signal generator electrically coupled to the plurality of extended needles to produce pulsed radio frequency signals across the plurality of needles to affect dermatological tissue near the plurality of needles" as required by the Asserted Claims. *See* '774 Patent at cl. 11. Specifically, for this limitation, Respondents cite Livneh for RF and electrodes 32 being in multiple positions. *See, e.g.,* Respondents' Jul. 10, 2023 Invalidity Contentions, Ex. E12 at 6-8. But Livneh provides no information about whether RF is pulsed or periodically pulsed or information about pulses, such as its impact if any on dermatological tissue. *See, e.g.*, Livneh at ¶¶ 37, 39. Thus Respondents' invalidity contentions fail to provide any evidence that Livneh discloses this claim limitation.

For example, Livneh does not disclose "wherein the device includes an end surface configured to be placed on or near dermatological tissue to be treated, the end surface including a plurality of needles extendable a desired distance from the end surface" and "further including a mechanism for causing the plurality of the extendable needles to extend a desired distance from the end surface" as required by the Asserted Claims. *See* '774 Patent at cl. 13. Specifically, for

this limitation, Respondents appear to cite Livneh for the mechanism 74 for "operatively engaging the electrodes 32" where it may be automatically powered by a motor. *See, e.g.,* Respondents' Jul. 10, 2023 Invalidity Contentions, Ex. E12 at 8-10. But Linveh does not disclose extending the needles a desired distance and it provides no details about mechanism and whether it causes the plurality of the extendable needles to extend a desired distance. *See, e.g.*, Livneh at ¶ 45. Respondents' invalidity contentions fail to provide any evidence that Livneh discloses these claim limitations.

For example, Livneh does not disclose "wherein the device includes an end surface configured to be placed on or near dermatological tissue to be treated, the end surface including a plurality of needles extendable a desired distance from the end surface" and "further including a motor coupled to the plurality of extendable needles that may be directed to cause the plurality of the extendable needles to extend a desired distance from the end surface," as required by the Asserted Claims. *See* '774 Patent at cl. 14. Specifically, for this limitation, Respondents appear to cite Livneh for the mechanism 74 for "operatively engaging the electrodes 32" where it may be automatically powered by a motor. *See, e.g.,* Respondents' Jul. 10, 2023 Invalidity Contentions, Ex. E12 at 12-14. But Linveh does not disclose extending the needles a desired distance and it provides no details about a motor, such as where it is located, whether it has a draft shaft, or whether a draft shaft, if disclosed, is couplable to anything to extend needles a desired distance. *See, e.g.*, Livneh at ¶ 45. Thus Respondents' invalidity contentions fail to provide any evidence that Livneh discloses this claim limitation.

For example, Livneh does not disclose "placing a user holdable device releasably couplable deployable needle module end surface on or near dermatological tissue to be treated, the user holdable device including a proximal end and the releasably couplable deployable needle module" as

required by the Asserted Claims. *See* '812 Patent at cl. 1. Specifically, for this limitation, Respondents cite Livneh Fig. 19 with a curved block 128 with electrodes 32 in a housing 36 that is connected to a handle portion 38 with a mechanism 74 that is slideable to push down the curved block 128. *See, e.g.,* Respondents' Jul. 10, 2023 Invalidity Contentions, Ex. F13 at 4-9. But Livneh provides no information of what, if any, parts of Fig. 19 or any other embodiment is "releasably couplable," including any portion that may be considered a needle deployable module. *See, e.g.*, Livneh at ¶¶ 54, 64, Fig. 19. Thus Respondents' invalidity contentions fail to provide any evidence that Livneh discloses this claim limitation.

For example, Livneh does not disclose "the releasably couplable deployable needle module mechanically separatably from the user holdable device proximal end and including a needle assembly including a plurality of needles" as required by the Asserted Claims. *See* '812 Patent at cl. 1. Specifically, for this limitation, Respondents cite Livneh for the Fig. 19 embodiment and electrodes being driven into the skin at a perpendicular direction. *See, e.g.,* Respondents' Jul. 10, 2023 Invalidity Contentions, Ex. F13 at 10-12. But Livneh provides no information of what, if any, parts of Fig. 19 or any other embodiment are "mechanically separatable," including any portion that may be considered a needle assembly or proximal end. *See, e.g.*, Livneh at ¶¶ 35, 54, 64, Fig. 19. Thus Respondents' invalidity contentions fail to provide any evidence that Livneh discloses this claim limitation.

For example, Livneh does not disclose "the needle assembly movable within the releasably couplable deployable needle module to extend the plurality of needles from the releasably couplable deployable needle assembly end surface while at least one electrical contact of the needle assembly remains electrically coupled to at least one electrical contact of the user holdable device proximal end" as required by the Asserted Claims. *See* '812 Patent at cl. 1. Specifically, for this

limitation, Respondents cite Livneh for its block 128 in one embodiment and a wire 51 and a coil 92 of another embodiment. *See, e.g.,* Respondents' Jul. 10, 2023 Invalidity Contentions, Ex. F13 at 12-15. But Livneh provides insufficient information to disclose this limitation as block 128 is not described as a conductor and there is scant description of the wire 51 and coil 92, which do not disclose this limitation, and certain components of handheld unit 34 do not move with other components. *See, e.g.*, Livneh at ¶¶ 49, 64. Livneh provides no information of what, if any, parts of Fig. 19 or any other embodiment is "releasably couplable," including any portion that may be considered a deployable needle module. *See, e.g.*, Livneh at ¶¶ 54, 64, Fig. 19. Thus Respondents' invalidity contentions fail to provide any evidence that Livneh discloses this claim limitation.

For example, Livneh does not disclose "communicating electrical signals from the user holdable device proximal end to the needle assembly via the electrical contacts" as required by the Asserted Claims. *See* '812 Patent at cl. 1. Specifically, for this limitation, Respondents cite Livneh for a power supply connected to handle unit that provides electrical current to electrodes 32, including using the coil 92 and the wire 51, in certain embodiments. *See, e.g.,* Respondents' Jul. 10, 2023 Invalidity Contentions, Ex. F13 at 15-18. But Livneh does not disclose whether the electrical current provided to the electrodes 32 come from the proximal end. *See, e.g.*, Livneh at ¶¶ 35, 37, 41, 49, 63, 64. Thus Respondents' invalidity contentions fail to provide any evidence that Livneh discloses this claim limitation.

For example, Livneh does not disclose "energizing a motor coupled to the needle assembly to cause the plurality of the needles to extend a desired distance from the releasably couplable deployable needle module end surface," "further comprising energizing the plurality of needles via a signal generator electrically coupled to the user holdable device proximal end," "wherein the user holdable device proximal end further includes at least one embedded LED therein and further

including energizing the at least one embedded LED so the at least one embedded LED illuminates the releasably couplable deployable needle module," and "wherein the needle assembly includes a translucent section and further including energizing the least one embedded LED to illuminate the plurality of needles via the needle assembly translucent section" as required by the Asserted Claims. *See* '812 Patent at cl. 5. Specifically, for this limitation, Respondents cite Livneh for an LED pushbutton 105 and motor to drive mechanism 74. *See, e.g.,* Respondents' Jul. 10, 2023 Invalidity Contentions, Ex. F13 at 18-24. But Livneh provides no details about the motor, such as what it is coupled to and its effect, and no disclosure of motor causing the needles to extend a desired distance. *See, e.g.*, Livneh at ¶ 45. Livneh discloses the pushbutton 105 is used for "controlling operation of the apparatus 30," such as power, application of vacuum, application of coolant, and energization of electrodes 32. Livneh at ¶ 53. Livneh provides no information of what, if any, parts of Fig. 19 or any other embodiment is "releasably couplable," including any portion that may be considered a needle assembly, discloses components of the housing 36 being made of plastic with no further disclosure that they would be translucent, and gives almost no information of the LED pushbutton 105, e.g., embedding, location, operating parameters, effect. *See, e.g.*, Livneh at ¶ 33. Livneh does not disclose embedding an LED (indeed it is not shown in any figure) or the LED illuminating anything. *See, e.g.*, Livneh at ¶ 53. Thus Respondents' invalidity contentions fail to provide any evidence that Livneh discloses these claim limitations.

For example, Livneh does not disclose "energizing a motor coupled to the needle assembly to cause the plurality of the needles to extend a desired distance from the releasably couplable deployable needle module end surface" and "further comprising energizing the motor to deploy the plurality of needles to a predetermined depth and directing the signal generator to energize the plurality of needles at a predetermined intensity for a predetermined duty cycle" as required by the

Asserted Claims. *See* '812 Patent at cl. 6. Specifically, for this limitation, Respondents cite Livneh for a motor for mechanism 74 and moving electrodes 32 from one position to another. *See, e.g.,* Respondents' Jul. 10, 2023 Invalidity Contentions, Ex. F13 at 24-28. But Livneh provides no details about the motor, such as what it is coupled to and whether it can or is energized, or use of the motor to extend or deploy needles a desired distance or to a predetermined depth. *See, e.g.*, Livneh at ¶ 45. Livneh provides no information about intensity or duty cycles, including whether they are predetermined—indeed it provides next to no information about the parameters of apply RF through electrodes. *See, e.g.*, Livneh at ¶¶ 37, 39. Thus Respondents' invalidity contentions fail to provide any evidence that Livneh discloses these claim limitations.

For example, Livneh does not disclose "wherein a first electrical contact of the at least one electrical contact is electrically coupled to a first plurality of the plurality of needles and a second electrical contact of the at least one electrical contact is electrically coupled to a second, different plurality of the plurality of needles" as required by the Asserted Claims. *See* '812 Patent at cl. 10. Specifically, for this limitation, Respondents cite Livneh for its block 128 in one embodiment and a wire 51 and a coil 92 of another embodiment. *See, e.g.,* Respondents' Jul. 10, 2023 Invalidity Contentions, Ex. F13 at 28-30. But Livneh provides insufficient information to disclose this limitation as block 128 is not described as a conductor and there is scant description of the wire 51 and coil 92, which do not disclose this limitation. *See, e.g.*, Livneh at ¶¶ 49, 64. Thus Respondents' invalidity contentions fail to provide any evidence that Livneh discloses this claim limitation.

For example, Livneh does not disclose "a releasably couplable deployable needle module" as required by the Asserted Claims. *See* '812 Patent at cl. 12. Specifically, for this limitation, Respondents cite Livneh Fig. 19 with a curved block 128 with electrodes 32 in a housing 36 that is connected to a handle portion 38 with a mechanism 74 that is slideable to push down the curved

block 128. *See, e.g.,* Respondents' Jul. 10, 2023 Invalidity Contentions, Ex. F13 at 30-33. But Livneh provides no information of what, if any, parts of Fig. 19 or any other embodiment is "releasably couplable," including any portion that may be considered a needle deployable module. *See, e.g.*, Livneh at ¶¶ 54, 64, Fig. 19. Thus Respondents' invalidity contentions fail to provide any evidence that Livneh discloses this claim limitation.

For example, Livneh does not disclose "the releasably couplable deployable needle module mechanically separatably from the user holdable device proximal end and including a needle assembly including a plurality of needles" as required by the Asserted Claims. *See* '812 Patent at cl. 12. Specifically, for this limitation, Respondents cite Livneh for the Fig. 19 embodiment and electrodes being driven into the skin at a perpendicular direction. *See, e.g.,* Respondents' Jul. 10, 2023 Invalidity Contentions, Ex. F13 at 36-40. But Livneh provides no information of what, if any, parts of Fig. 19 or any other embodiment are "mechanically separatable," including any portion that may be considered a needle assembly or proximal end. *See, e.g.*, Livneh at ¶¶ 35, 54, 64, Fig. 19. Thus Respondents' invalidity contentions fail to provide any evidence that Livneh discloses this claim limitation.

For example, Livneh does not disclose "the needle assembly movable within the releasably couplable deployable needle module to extend the plurality of needles from the releasably couplable deployable needle assembly end surface while at least one electrical contact of the needle assembly remains electrically coupled to at least one electrical contact of the user holdable device proximal end" as required by the Asserted Claims. *See* '812 Patent at cl. 12. Specifically, for this limitation, Respondents cite Livneh for its block 128 in one embodiment and a wire 51 and a coil 92 of another embodiment. *See, e.g.,* Respondents' Jul. 10, 2023 Invalidity Contentions, Ex. F13 at 40-45. But Livneh provides insufficient information to disclose this limitation as block 128 is

not described as a conductor and there is scant description of the wire 51 and coil 92, which do not disclose this limitation, and certain components of handheld unit 34 do not move with other components. *See, e.g.*, Livneh at ¶¶ 49, 64. Livneh provides no information of what, if any, parts of Fig. 19 or any other embodiment is "releasably couplable," including any portion that may be considered a needle deployable module. *See, e.g.*, Livneh at ¶¶ 54, 64, Fig. 19. Thus Respondents' invalidity contentions fail to provide any evidence that Livneh discloses this claim limitation.

For example, Livneh does not disclose "further including a motor coupled to the needle assembly to extend the plurality of needles a desired distance from the releasably couplable deployable needle assembly end surface when the motor is energized with a particular signal" as required by the Asserted Claims. *See* '812 Patent at cl. 13. Specifically, for this limitation, Respondents cite Livneh for the mechanism 74 for "operatively engaging the electrodes 32" where it may be automatically powered by a motor. *See, e.g.,* Respondents' Jul. 10, 2023 Invalidity Contentions, Ex. F13 at 45-49. But Livneh provides no details about the motor, such as whether it is energized and how it would be done, e.g., a particular signal, and does not disclose using it to extend needles a desired distance. *See, e.g.*, Livneh at ¶ 45. Thus Respondents' invalidity contentions fail to provide any evidence that Livneh discloses this claim limitation.

For example, Livneh does not disclose "further including a signal generator electrically coupled to the user holdable device proximal end to energize the plurality of needles" as required by the Asserted Claims. *See* '812 Patent at cl. 14. Specifically, for this limitation, Respondents cite Livneh for its block 128 in one embodiment and a wire 51 and a coil 92 of another embodiment. *See, e.g.,* Respondents' Jul. 10, 2023 Invalidity Contentions, Ex. F13 at 49-52. Livneh provides insufficient information to disclose this limitation as block 128 is not described as a conductor and there is scant description of the wire 51 and coil 92, which do not provide whether they

[redacted]

satisfy this limitation, and certain components of handheld unit 34 do not move with other components. *See, e.g.*, Livneh at ¶¶ 49, 64. Livneh does not disclose whether the electrical current provided to the electrodes 32 come from the proximal end. *See, e.g.*, Livneh at ¶¶ 35, 37, 41, 49, 63, 64. Thus Respondents' invalidity contentions fail to provide any evidence that Livneh discloses this claim limitation.

For example, Livneh does not disclose "wherein the user holdable device proximal end includes the motor, the motor including a drive shaft releasably couplable to the needle assembly" as required by the Asserted Claims. *See* '812 Patent at cl. 16. Specifically, for this limitation, Respondents cite Livneh for the mechanism 74 for "operatively engaging the electrodes 32" where it may be automatically powered by a motor. *See, e.g.,* Respondents' Jul. 10, 2023 Invalidity Contentions, Ex. F13 at 52-56. But Livneh provides no details about the motor, such as where it is located, whether it has a drive shaft, or whether a drive shaft, if disclosed, is couplable to anything. *See, e.g.*, Livneh at ¶ 45. Livneh provides no information of what, if any, of any embodiment is "releasably couplable," including any portion that may be considered a needle assembly. *See, e.g.*, Livneh at ¶¶ 33, 34, 54, 64. Thus Respondents' invalidity contentions fail to provide any evidence that Livneh discloses this claim limitation.

For example, Livneh does not disclose "wherein the user holdable device proximal end further includes at least one embedded LED therein and the apparatus further including a photonic signal generator electrically coupled to the least one embedded LED, the at least one embedded LED capable of illuminating the needle assembly when energized" as required by the Asserted Claims. *See* '812 Patent at cl. 17. Specifically, for this limitation, Respondents cite Livneh for an LED pushbutton 105. *See, e.g.,* Respondents' Jul. 10, 2023 Invalidity Contentions, Ex. F13 at 56-58. But Livneh discloses the pushbutton 105 is used for "controlling operation of the apparatus

30," such as power, application of vacuum, application of coolant, and energization of electrodes 32. Livneh at ¶ 53. Livneh does not disclose embedding an LED (indeed it is not shown in any figure), energizing the LED in any way, a photonic signal generator, or the LED illuminating anything. *See, e.g.*, Livneh at ¶ 53. Thus Respondents' invalidity contentions fail to provide any evidence that Livneh discloses this claim limitation.

For example, Livneh does not disclose "wherein one of the at least one electrical contacts includes a pin that is extendable in the same direction as the plurality of needles" as required by the Asserted Claims. *See* '812 Patent at cl. 16. Specifically, for this limitation, Respondents cite Livneh for its block 128 in one embodiment and a wire 51 and a coil 92 of another embodiment. *See, e.g.,* Respondents' Jul. 10, 2023 Invalidity Contentions, Ex. F13 at 58-61. But Livneh provides insufficient information to disclose this limitation as block 128 is not described as a conductor and there is scant description of the wire 51 and coil 92, which do not provide whether they satisfy this limitation. *See, e.g.*, Livneh at ¶¶ 49, 64. Thus Respondents' invalidity contentions fail to provide any evidence that Livneh discloses this claim limitation.

For example, Livneh does not disclose "wherein one of the user holdable device proximal end and the needle assembly includes at least two extendable electrical contacts and the other includes at least two electrical contacts couplable to the at least two extendable electrical contacts" as required by the Asserted Claims. *See* '812 Patent at cl. 19. Specifically, for this limitation, Respondents cite Livneh for its block 128 in one embodiment and a wire 51 and a coil 92 of another embodiment. *See, e.g.,* Respondents' Jul. 10, 2023 Invalidity Contentions, Ex. F13 at 61-64. But Livneh provides insufficient information to disclose this limitation as block 128 is not described as a conductor and there is scant description of the wire 51 and coil 92, which do not disclose this

limitation. *See, e.g.*, Livneh at ¶¶ 49, 64. Thus Respondents' invalidity contentions fail to provide any evidence that Livneh discloses this claim limitation.

Respondents attempt to gap-fill these glaring deficiencies in Livneh through a broad brush statement for each limitation that "[t]o the extent this limitation is not explicitly or inherently disclosed by this reference, or rendered obvious by the references disclosed herein, it would have further been obvious given the knowledge of a person of ordinary skill in the art and/or other references disclosed and/or charted in Respondents' Invalidity Contentions." *See, e.g.,* Respondents' Jul. 10, 2023 Invalidity Contentions, Exs. D13, E12, and F13 at *passim*. But Respondents' catch-all qualifications are inadequate to establish that any of the Asserted Claims are invalid. First, it is improper to rely on a person of skill's knowledge "as a wholesale substitute for reasoned analysis and evidentiary support, especially when dealing with a limitation missing from the prior art references specified." *Arendi S.A.R.L.*, 832 F.3d at 1362. Livneh's deficiencies go to critical elements of the Asserted Claims that cannot be papered over with conclusory allegations about a POSITA's background knowledge. Second, as explained in the sections discussing Respondents' other invalidity charts, the other references Respondents try to combine with Livneh each themselves lack various limitations of the Asserted Claims.

Thus, Respondents have not established a *prima facie* case of anticipation or obviousness.

C. Obviousness

A patent is obvious "if the differences between the subject matter sought to be patented and the prior art are such that the subject matter as a whole would have been obvious at the time the invention was made to a person having ordinary skill in the art to which said subject matter pertains." 35 U.S.C. § 103(a) (2006) (pre-AIA); *see also* 35 U.S.C. § 103(a) (2012). Obviousness is a question of law, based on underlying factual determinations assessing "(1) the level of ordinary skill in the pertinent art, (2) the scope and content of the prior art (3) the differences between the

prior art and the claims at issue, and (4) objective indicia of nonobviousness such as commercial success, long-felt but unsolved needs, failure of others, and unexpected results." *Bristol-Myers Squibb Co. v. Teva Pharms. USA, Inc.*, 769 F.3d 1339, 1341–42 (Fed. Cir. 2014) (citing *KSR Int'l Co. v. Teleflex Inc.*, 550 U.S. 398, 406 (2007)). Other objective indicia of non-obviousness, also known as secondary considerations of non-obviousness, include unexpected properties of the claimed invention, skepticism, industry praise, licenses showing industry respect for the invention, and copying. *See Allergan, Inc. v. Sandoz Inc.*, 796 F.3d 1293, 1306 (Fed. Cir. 2015) (explaining that unexpected difference in kind supports finding of non-obviousness); *Transocean Offshore Deepwater Drilling, Inc. v. Maersk Drilling USA, Inc.*, 699 F.3d 1340, 1352–53 (Fed. Cir. 2012) (finding skepticism expressed by own inventors of the patented invention could be considered in obviousness analysis); *In re Rouffet*, 149 F.3d 1350, 1355 (Fed. Cir. 1998); *Apple Inc. v. Samsung Elecs. Co.*, 839 F.3d 1034, 1053 (Fed. Cir. 2016).

When determining if something is obvious, it is not enough to "merely [] demonstrat[e] that each of its elements was, independently, known in the prior art." *KSR*, 550 U.S. at 418. Rather, "the law requires a motivation to select the references and to combine them in the particular claimed manner to reach the claimed invention." *Unigene Labs., Inc. v. Apotex, Inc.*, 655 F.3d 1352, 1361 (Fed. Cir. 2011); *see also Intelligent Bio-Sys., Inc. v. Illumina Cambridge Ltd.*, 821 F.3d 1359, 1368 (Fed. Cir. 2016) ("When an obviousness determination relies on the combination of two or more references, there must be some suggestion or motivation to combine the references." (citing *WMS Gaming, Inc. v. Int'l Game Tech.*, 184 F.3d 1339, 1355 (Fed. Cir. 1999)); *Dome Patent L.P. v. Lee*, 799 F.3d 1372, 1380 (Fed. Cir. 2015) ("If all elements of a claim are found in the prior art . . . the factfinder must further consider the factual questions of whether a person of ordinary skill in the art would be motivated to combine those references, and whether in

making that combination, a person of ordinary skill would have had a reasonable expectation of success."). A motivation to solve an alleged problem is not the same as a motivation to combine the particular teachings of a prior art reference with the particular teachings of one or more other prior art references. *See Innogenetics, N.V. v. Abbott Labs.*, 512 F.3d 1363, 1373 (Fed. Cir. 2008) ("[K]nowledge of a problem and motivation to solve it are entirely different from motivation to combine particular references to reach the particular claimed [invention]."). According to the Supreme Court, "rejections on obviousness grounds cannot be sustained by mere conclusory statements; instead, there must be some articulated reasoning with some rational underpinning to support the legal conclusion of obviousness." *KSR*, 550 U.S. at 418 (quoting *In re Kahn*, 441 F.3d 977, 988 (Fed. Cir. 2006)).

Further, one must prove "that the skilled artisan would have had a reasonable expectation of success in [combining these references]." *Proctor & Gamble Co. v. Teva Pharm. USA, Inc.*, 566 F.3d 989, 994 (Fed. Cir. 2009); *see also Cumberland Pharms. Inc. v. Mylan Institutional LLC*, 846 F.3d 1213 (Fed. Cir. 2017).

In considering alleged obviousness, it is critical to evaluate whether a reference teaches away from the claimed invention, *i.e.*, whether someone would be discouraged "from following the path set out in the reference, or would be led in a direction divergent from the path that was taken by the applicant." *In re Gurley*, 27 F.3d 551, 553 (Fed. Cir. 1994).

It is also important to remember that, when determining what would have been obvious at the time, the use of hindsight is not permitted. *See KSR*, 550 U.S. at 421 (cautioning the trier of fact against "the distortion caused by hindsight bias" and "arguments reliant upon ex post reasoning" in determining obviousness); *see also In re Cyclobenzaprine Extended-Release Capsule Hydrochloride Patent Litig.*, 676 F.3d 1063, 1070–71 (Fed. Cir. 2012) (rejecting hindsight claims of

obviousness); *Mintz v. Dietz & Watson, Inc.*, 679 F.3d 1372, 1379 (Fed. Cir. 2012) (explaining that, in order to prevent hindsight bias, "the proper analysis requires a form of amnesia that 'forgets' the invention and analyzes the prior art and understanding of the problem at the date of invention"); *Kinetic Concepts, Inc. v. Smith & Nephew, Inc.*, 688 F.3d 1342, 1368 (Fed. Cir. 2012) (the trier of fact must "be careful not to allow hindsight reconstruction of references to reach the claimed invention without any explanation as to how or why the references would be combined to produce the claimed invention.").

Respondents assert "[e]ach prior art reference may be combined with one or more other prior art references (e.g., as described herein and in Exhibits A-01 to F-12 [*sic*]) to render obvious the Asserted Claims in combination." Respondents' Jul. 10, 2023 Invalidity Contentions at 25. Respondents later served a Supplemental Identification of Prior Art to purportedly comply with the Ground Rules that supposedly identified primary and secondary references for invalidity contentions. June 5, 2023 Respondents' Supplemental Identification of Prior Art at 1; *see also id.* at Exs. 1-6 (chart of combinations). As shown below, Respondents have not shown any reference, alone or in combination, renders any Asserted Claim of the Asserted Patents obvious.

1. Not All Claim Limitations Disclosed

As identified above, each reference Respondents assert fail to disclose certain claim limitations. To the extent there is any combination of references that both do not teach the same claim limitation in an Asserted Claim, the combination fails to render obvious that claim for that reason.

2. No Motivation to Combine

A POSITA would not be motivated to combine any of the references as proposed by Respondents.

Respondents argue that POSITA would have been motivated to combine any of Hantash '718 PCT, Mehta, Manstein, Ganz, Mulholland, Lee '500, Kang '395, Livneh, Underwood,

Miratone, Scarlet, DeAge, and Na '848 at least because the references are "in the same field of technical endeavor," i.e., "each addressing ways to treat skin using RF microneedle devices and/or configure microneedling devices." Respondents' Jul. 10, 2023 Invalidity Contentions at 47, 52. Respondents are wrong—both on the law and facts.

Prior art references "falling within the same alleged field . . . without more, is not enough for" a patent challenger "to meet its burden of presenting a sufficient rationale to support an obviousness conclusion." *Securus Techs., Inc. v. Glob. Tel*Link Corp.*, 701 F. App'x 971, 977 (Fed. Cir. 2017); *see also Microsoft Corp. v. Enfish, LLC*, 662 Fed. Appx. 981, 990 (Fed. Cir. 2016) ("[The] Board correctly concluded that [the petitioner] did not articulate a sufficient motivation to combine. With respect to [certain challenged claims], [the petitioner] gave no reason for the motivation of a person of ordinary skill to combine [the two references] except that the references were directed to the same art or same techniques . . . ."). Yet here, the sole motivation to combine Respondents present is that several of the prior art references are "in the same field of technical endeavor" of "ways to treat skin using RF microneedle devices and/or configure microneedling devices." Respondents' Jul. 10, 2023 Invalidity Contentions at 47, 52. As discussed, above, this is insufficient as a matter of law.

Respondents are wrong on the facts as well. For example, Respondents assert that "the cited art discloses use of the same RF microneedling treatment to achieve the same dermatological result." Respondents' Jul. 10, 2023 Invalidity Contentions at 51. But the references themselves do not tell a cohesive story on how to get a desired result, and indeed the intended result differs among the references. And, the references disclose a broad range of (often incompatible) methods of treatment and associated apparatuses, including: 1) conflicting electrode size, shape, and

[redacted]

polarity configurations; 2) differing power requirements; 3) varying needle widths, spacing, and depth-control; 4) wildly different device designs; and 5) conflicting frequency ranges and times.

For example, the cited prior art teach differing (and often conflicting) electrode size, shape, and polarity configuration. Underwood teaches "the central electrode 260 will have an opposite polarity from the rest of the electrodes 256 to provide electric current flow therebetween." Underwood at 12:2-5, Fig. 7:

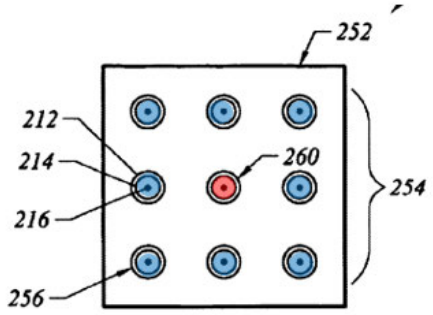

Underwood Fig. 7

As Underwood explains, the electrode polarities were designed this way so that "the electric current is generally confined to the region immediately surrounding the exposed portions 216 of the electrodes 256." *Id.* at 12:5-7.

On the other hand, Hantash '718 PCT teaches that "[a]lternate interleaved rows of the array are wired to either the plus or the minus electrode through the common wiring buses 111 and 112." Hantash '718 PCT at [0047], Fig. 3A:

[redacted]

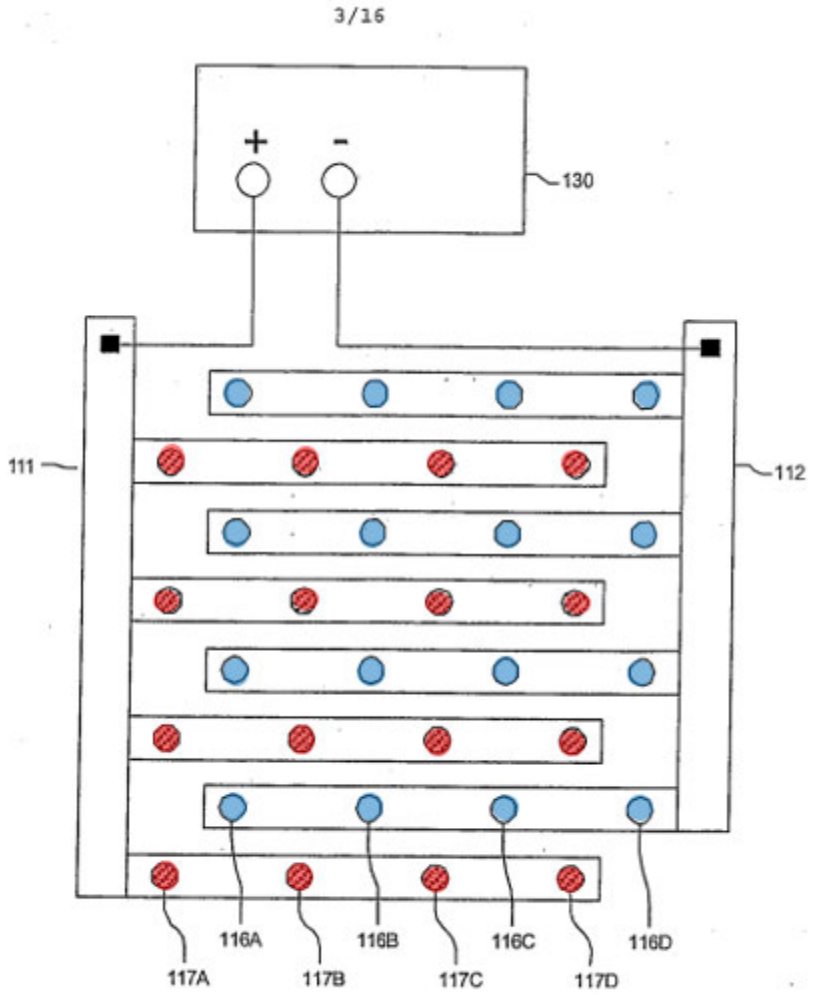

Hantash '718 PCT Fig. 3A

As another example, Mehta teaches "an array of probes 108 comprising five electrode pairs 105 inserted into a reticular dermis layer 19 to create a series of discrete fractional lesions 2 leaving tissue in the adjacent epidermal layer 16 and subcutaneous layer 12 undamaged." Mehta at 37:25-29, Fig. 13:

[redacted]

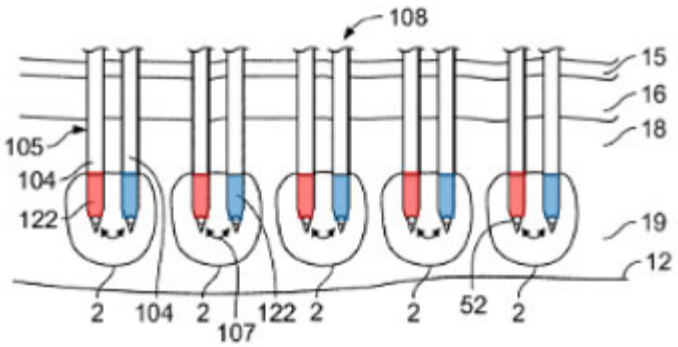

Mehta Fig. 13A

As discussed above in the sections addressing each individually charted references, the electrode configurations taught in the remaining references similarly differ.

The references also differ, and indeed often contradict each other, regarding the requisite power parameters. Hantash '718 PCT teaches a RF source with a power of 5 W (Hantash '718 PCT at [0077]), while Mehta teaches a RF source with a maximum of at 3 W (Mehta at 28:15-24). Other references disclose much large power ranges. For example, Mulholland teaches a "preferred range of power" is from 10 W up to 500 W (Mulholland at 4:29-30) and Ganz teaches that the power density should be configured in the range of about 50 to about 200 W per square centimeter (Ganz at [0011], [0057]). Thus, the ranges of power between references differ substantially.

The references also disclose teach differing (and often conflicting) needle widths, spacing, and depth-control. For example, Hantash '718 PCT teaches using a vacuum module to pull skin over the needles to precisely control the needle penetration depth. Hantash '718 PCT at ¶ 46 ("The negative pressure created within each of the needle-specific vacuum rings 121 forces the skin 150 onto the encircled needle such that the encircled needle penetrates to a predetermined depth in the skin 150"), ¶ 68 (". . . it may be desirable to use vacuum force to push the needles 115 into the skin 150"). Hantash '718 PCT teaches this method is used to have fewer moving parts that wear out, which counsels away from more mechanical pieces in a device. *Id.* at ¶ 68. Hantash – Lasers in Surgery teaches a spring-loaded electrode deployment system which relies on impedance

[redacted]

sensing to control the depth and considers the impedance sensing "was critical to achieve tunable dosimetry allowing for controlled delivery of a specific thermal coagulation profile at a particular depth in the dermis." Hantash – Lasers in Surgery at 90, 92. Similar to Hantash – Lasers in Surgery, Mehta teaches that "providing the virtual depth/location depiction 350 allows the physician to not only identify whether the array is located within the desired tissue layer but also allows the physician to observe the angle of the electrode array in tissue." Mehta at 33:14-18. Changing the way these function may cause the original device to lose advantage of the function chosen by the reference with little to no benefit—at least Respondents have identified no such benefit or why it would have obvious to a POSITA.

Moreover, as discussed above in the sections addressing each individually charted references, device design varies wildly between the cited references. Nor are the differences in device design insubstantial, as the differing designs result in entirely different treatment results. For example, the treatment regions in relation to needle positions in Manstein, Hantash '718 PCT, and Underwood are different (annotated in red below).

WO 2007/064718 to Hantash at FIG. 1

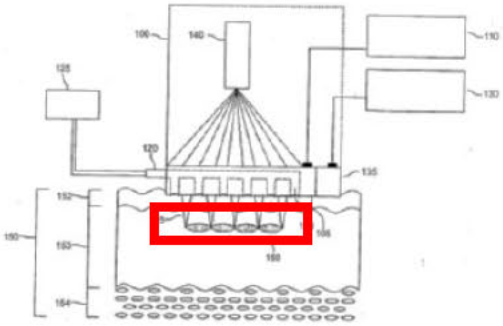

Underwood at FIG. 6:

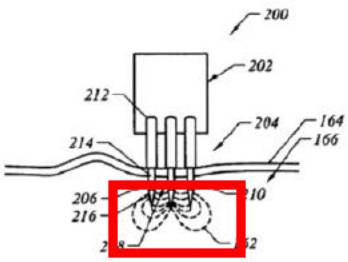

Respondents' Jul. 10, 2023 Invalidity Contentions at 48-49 (annotated). As seen above, Manstein uses a monopolar configuration. Hantash '718 PCT teaches applying energy between electrodes,

and Underwood teaches applying energy both near and between electrodes and extending energy distribution to the deeper tissues. Each have different impacts to the impacted tissue.

Also, none of the prior art cited by Respondents teaches what treatment parameters should be applied to achieve the required limitations of the Asserted Claims, including the limitations requiring application of energy / coagulation around each electrode *rather than between electrodes* (or substantially around the electrodes). Indeed, many of the references expressly teach away from this result. *See infra* at *passim*. In fact, as discussed above, the devices teach a range of (often conflicting) treatment parameters, each with differing results. As a result, none of the cited art teaches a POSITA how to practice the Asserted Claims. And nothing in Respondents' contentions explain why or how a POSITA would combine certain features from one reference with another reference to arrive at any particular limitation of the claimed inventions of the Asserted Patents. Instead, Respondents are merely throwing darts at a board filled with combinatorial prior art possibilities in the hope that the ITC succumbs to hindsight. *See In re O'Farrell*, 853 F.2d at 903 (improper to simply "vary all parameters" to arrive at a claimed invention where the prior art gave no indication the parameters were critical or direction as to which choices would likely to be successful).

As another example, Respondents argue that a POSITA "would have been motivated to incorporate the LEDs disclosed in Na '848, Mehta, and Kang '395 into Miratone, Mehta, and ScarLet to permit 'direct visualization' of the transfer of energy to the patient's skin." Respondents' Jul. 10, 2023 Invalidity Contentions at 117; *see also id.* at 120. Not so. Respondents fail to show that any of Miratone, Mehta, or ScarLet suffered from any problem regarding visualization of the skin, and LEDs do not permit visualization of energy transfer.

Respondents also argue that it would have been obvious "to modify Mehta, Miratone, or ScarLet and/or combine the teaching of Mehta, Miratone, or ScarLet with the knowledge of a POSITA, or combine the teachings of Mehta with one of Mulholland, Miratone, ScarLet, Na'848, Lee '500, Hantash 2009, Hantash 718 PCT, and DeÁge, combine the teachings of Miratone with one of Mulholland, Mehta, ScarLet, Na'848, Lee '500, Hantash 2009, Hantash 718 PCT, and DeÁge, or combine the teachings of ScarLet with one of Mulholland, Miratone, Mehta, Na'848, Lee '500, Hantash 2009, Hantash 718 PCT, and DeÁge in a manner that would have rendered the asserted claims invalid as obvious." *See, e.g.*, *id.* at 116, 118, 121, 123, 125. This is not an articulation of combining any particular reference with another reference. Respondents assert "at least Mulholland, Mehta, ScarLet, Na'848, Miratone, DeÁge, Hantash 2009, Hantash 718 PCT, and Lee '500 disclose various mechanisms for causing a plurality of extendable needles to extend a desired distance from the end surface producing pulsed radio frequency signals across the plurality of needles, and at least Mehta, Lee '500, and ScarLet specifically disclose a motor coupled to the plurality of extendable needles." Again, Respondents fail to identify specific teachings they propose to combine. These are exemplary of Respondents' mix-and-match approach to asserting obviousness. To the extent Respondents are permitted to articulate specific reasons for specific combinations, Complaint reserves the right to respond to them.

* * *

Thus, Respondents fail to show a motivation to combine any reference in its contentions.

3. Reasonable Expectation of Success

Although their burden, Respondents only provide boilerplate assertions that exemplarily combinations would have a reasonable expectation of success. *See, e.g.*, Respondents' Jul. 10, 2023 Invalidity Contentions at 53:

> A POSITA would have been motivated to draw upon his or her knowledge of the relevant art to modify Mehta as necessary to achieve any of the claimed features, and would have enjoyed a reasonable expectation of success in doing so. A POSITA would have enjoyed a reasonable expectation of success in combining and/or modifying the teachings of the foregoing prior art references and products, together with general knowledge of the art, to achieve the claimed subject matter, at least because the prior art itself discloses and/or practices the claimed methods and apparatuses to achieve the claimed results.[33]

But these conclusory assertions fail to provide any actual facts or particularized arguments as to why a POSTIA would have a reasonable expectation of success in combining any of the cited prior art.

Further, slight changes in the configuration or operation in the device may have large negative impacts in the result. There needs to be precision in how to apply energy, how much energy to apply, when (and how long) to apply energy, and where to apply energy. Otherwise, negative results of delivery energy to other body systems or scarring may result. Respondents articulate no reason why a POSTIA combining different references with disparate treatment parameters would have a reasonable expectation of success in reaching the claimed inventions.

4. Secondary Considerations of Non-Obviousness

Secondary considerations are among the "most probative and cogent evidence [of non-obviousness] in the record." *Proctor & Gamble Co. v. Teva Pharm. USA, Inc.*, 566 F.3d 989, 998 (Fed. Cir. 2009) (quoting *Stratojlex, Inc. v. Aeroquip Corp.*, 713 F.2d 1530, 1538 (Fed. Cir. 1983)) (alteration in original).

Respondents failed to address secondary considerations in their initial contentions. Instead, in their initial contentions, Respondents incorrectly argued that "Complainant bears the burden of establishing the existence of secondary considerations and the requisite nexus to the

[33] Respondents include similar boilerplate statements for each prior art reference they rely upon.

claimed inventions." *See* Invalidity Contentions at 105. This is false. Complainant has "a production burden to show the required nexus between sales of its [] product and the patented invention," however, "the accused infringer ultimately b[ears] the burden to show invalidity for obviousness." *Prometheus Laboratories, Inc. v. Roxane Laboratories, Inc.*, 805 F.3d 1092, 1101-02 (Fed. Cir. 2015); *see also Arius Two, Inc. v. Alvogen PB Research & Development LLC*, 2022 WL 17828352, *4–*5 (Fed. Cir. 2022) (nonprecedential) (vacating, and remanding, a finding of obviousness for a subset of the challenged claims since the district court erred in applying an evidentiary standard that effectively required the patentee to prove the secondary considerations of long-felt need and unexpected results by "clear and convincing" evidence.").

Regardless, on June 16, 2023, Complainant served its "Initial Validity Contentions," showing that the claims of the Asserted Patents were non-obvious based on at least the commercial success of Complainant's and Respondents' products and establishing a nexus between the claims and the commercial success of the products. Complainant's Initial Validity Contentions also showed that the claims of the Asserted Patents were non-obvious at least because the patented functionalities have been recognized through numerous awards and accolades, the Asserted Patents fulfilled a long-felt need, there was extensive copying of claim features in the marketplace, and there was significant teaching away in the art and that there was no contemporaneous invention. *See* Initial Validity Contentions at 325-346. Respondents' "Final Invalidity Contentions" failed to address Complainant's showing of non-obviousness. In fact, Respondents ignore Complainant's contentions all-together and still claim that "Complainant has not contended that any secondary considerations support any alleged non-obviousness of the Asserted Claims." *See* Final Invalidity Contentions at 126. As explained above, this statement is false. Complainant has "a production burden to show the required nexus between sales of its [] product

and the patented invention," which it did in at least its Initial Validity Contentions. See *Prometheus Laboratories,* 805 F.3d at 1101-02. Conversely, Respondents failed to rebut this showing and "the accused infringer ultimately b[ears] the burden to show invalidity for obviousness." *Id*. For this reason alone Respondents have not made any contentions regarding secondary considerations and appear to have ignored what is among the "most probative and cogent evidence [of nonobviousness] in the record." *Proctor & Gamble*, 566 F.3d at 998. Notably, Respondents failed to identify any documents relating to secondary indicia of non-obviousness, despite the document production deadline having now past. Complainant reserves the right to supplement these contentions when and if Respondents produce relevant responsive documents. In spite of Respondents' failure to meet their discovery obligations, the record in this case, including evidence of secondary indicia such as commercial success, industry praise, long felt but unsolved needs, evidence of copying, teaching away, and failure of others strongly supports the fact that the Asserted Claims of the Asserted Patents are not obvious. *See KSR*, 550 U.S. at 406-07.

a. Commercial Success

Complainant has a long and successful history of selling the Domestic Industry Products, which embody the Asserted Claims of the Asserted Patents.

1. Nexus

A nexus exists between the commercial success noted above and the patented features. In particular, as evidenced by **Exhibits 49 through 54** to COMPLAINANT'S FIRST SUPPLEMENTAL RESPONSES AND OBJECTIONS TO RESPONDENTS FIRST SET OF INTERROGATORIES AND **Exhibits 103 through 108** to COMPLAINANT'S SECOND SUPPLEMENTAL RESPONSES AND OBJECTIONS TO RESPONDENTS FIRST SET OF INTERROGATORIES, the Sylfirm X product, its related handpieces, and needle assemblies practice the Asserted Claims of the Asserted Patents. Indeed, there is ample evidence that the Sylfirm X embodies the full scope of the claimed invention, and that the

claimed inventions are "not merely a subcomponent of those products." *See Quanergy Systems, Inc. v. Velodyne Lidar USA, Inc.*, 24 F.4th 1406, 1417–20 (Fed. Cir. 2022) (Board properly applied a presumption of nexus to the patentee's evidence of secondary considerations where the patentee "provided 'ample evidence' that its commercial products 'embody the full scope of the claimed invention, and that the claimed invention is not merely a subcomponent of those products.'") Therefore, a presumption of nexus should apply.

Additionally, the beneficial use of the patented technology by the Sylfirm X has been addressed and discussed extensively in a number of academic papers. *See generally* VIOL-00000216-00000249 (SYLFIRM X - Clinical Paper Summary). For example, the Sylfirm X product's implementation of the '836, '379, and '444 Patents allows for "[s]ofter, more selective coagulation" using "a patented PW mode and 300-micron depth, harnessing the 'Na Effect' which is what really sets it apart from the pack and highlights why it is a leader." *See* VIOL-00001011 (K. Wilson, The Aesthetic Guide, *Leading Regenerative Therapies Creating a Paradigm Shift in Aesthetic Medicine* (March 2022)) at VIOL-00001013. The "Na effect, providing safe effective treatment because the tear drop shaped thermal effect minimizes heat damage to the epidermis and maximizes the therapeutic effect at the target." *See* VIOL-00001020 (M. Braun, *Sylfirm X Revolutionizes the Clinical Application of RF Microneedling* (May 2022)) at VIOL-00001022. At the same time Sylfirm X product practices the '536, '718, and '812 Patents because "unlike other RF microneedling devices, where the needle is inserted and strongly ejected rapidly like a staple gun, the needle tip of SYLFIRM X is designed to be inserted into the skin very smoothly, reducing pain, skin tearing, bleeding and bruising issues." *Id*. These two technologies work in synergy to reduce heat and physical damage to the patient's skin, reducing pain, swelling, downtime, and maximizing the therapeutic effect of the treatment.

Sylfirm X marketing material also explain the benefits of the patented inventions. For example, the patient brochure for the Sylfirm X product, explains the benefits of inventions claimed in the ’836, ’379, and ’444 Patents, and specifically cites to the ’836 patent:

See SERENDIA-00022192 (Sylfirm X Patient Brochure) at SERENDIA-00022194, -00022195; *see also* VIOL-00007139-00007139; VIOL-00007139-00007193; violmedical.com/about/patent.

Likewise, the “Elaborately Manufactured Needle Tip” which “provide[s] increased visibility and tip-to-skin contact during treatment” practice the ’536, ’718, and ’812 Patents and also contribute to the commercial success of the Sylfirm X. *Id*. at SERENDIA-00022202; *see also* VIOL-00001548 (Sylfirm X Training Material) at VIOL-00001552; https://www.sylfirm-x.com/; https://www.benev.com/sylfirmx-treatment; *see also* VIOL-00007139-00007139; VIOL-00007139-00007193; violmedical.com/about/patent.

Therefore, the commercial success of the Sylfirm X product “was due in at least part to the claimed” inventions. *See Oren Technologies, LLC v. Proppant Express Investments LLC*, 2021 WL 3120819, *7–*8 (Fed. Cir. 2021). Likewise, multiple infringing products have achieved commercial success by copying Complainant’s patented technology. *See e.g.*, **Exhibits**

1 through 42 to COMPLAINANT'S FIRST SUPPLEMENTAL RESPONSES AND OBJECTIONS TO RESPONDENTS FIRST SET OF INTERROGATORIES; **Exhibits 55 through 102** to COMPLAINANT'S SECOND SUPPLEMENTAL RESPONSES AND OBJECTIONS TO RESPONDENTS FIRST SET OF INTERROGATORIES; Interrogatories 1-4, COMPLAINANT'S SECOND SUPPLEMENTAL RESPONSES AND OBJECTIONS TO RESPONDENTS FIRST SET OF INTERROGATORIES; *see infra* § VII.C.4.

Complainant further states that, pursuant to Commission Rule 210.29(c), Complainant has produced and will continue to produce non-privileged, responsive documents sufficient for Respondents to derive or ascertain the requested information, including:

SERENDIA-00005670-00005682
SERENDIA-00022192-00022207
SERENDIA-00028056-00028061
SERENDIA-00037643-00037710
SERENDIA-00039064-00039089
SERENDIA-00039171-00039172
SERENDIA-00039173-00039174
SERENDIA-00039564-00039602
SERENDIA-00040037-00040037
SERENDIA-00040078-00040111
SERENDIA-00040112-00040149
SERENDIA-00040150-00040187
SERENDIA-00040234-00040267
SERENDIA-00040576-00040577
SERENDIA-00041027-00041056
SERENDIA-00041115-00041140
SERENDIA-00041141-00041166
SERENDIA-00041211-00041212
SERENDIA-00041213-00041218
SERENDIA-00041219-00041242
SERENDIA-00041243-00041245
SERENDIA-00041246-00041288
SERENDIA-00041605-00041642
SERENDIA-00041645-00041667
SERENDIA-00041737-00041774
SERENDIA-00041775-00041818
SERENDIA-00041820-00041935
SERENDIA-00041936-00042006
SERENDIA-00042017-00042087
SERENDIA-00042154-00042156
SERENDIA-00075694-00075694
SERENDIA-00075695-00075695
SERENDIA-00075793-00075793
SERENDIA-00075842-00075847
SERENDIA-00075873-00075878
SERENDIA-00076185-00076194
SERENDIA-00081419-00081425
VIOL-00000184-00000191
VIOL-00000210-00000215
VIOL-00000216-00000249
VIOL-00000321-00000415
VIOL-00000824-00000956
VIOL-00001011-00001019
VIOL-00001020-00001022
VIOL-00001216-00001254
VIOL-00001255-00001280
VIOL-00001394-00001396
VIOL-00001403-00001419
VIOL-00001420-00001448
VIOL-00001548-00001577
VIOL-00001972-00002157
VIOL-00002158-00002379
VIOL-00002380-00002568
VIOL-00002569-00002691
VIOL-00002692-00002875
VIOL-00002876-00003070
VIOL-00003744-00003829
VIOL-00003830-00003915
VIOL-00003916-00003980
VIOL-00004047-00004130

[redacted]

SERENDIA-00052367-00052368
SERENDIA-00052417-00052422
SERENDIA-00052424-00052449
SERENDIA-00053859-00053866
SERENDIA-00054161-00054188
SERENDIA-00054189-00054214
SERENDIA-00054248-00054279
SERENDIA-00054280-00054311
SERENDIA-00054312-00054343
SERENDIA-00054349-00054381
SERENDIA-00054382-00054428
SERENDIA-00054429-00054430
SERENDIA-00055127-00055127
SERENDIA-00055167-00055169
SERENDIA-00055380-00055405
SERENDIA-00055460-00055469
SERENDIA-00055472-00055498
SERENDIA-00055506-00055600
SERENDIA-00055648-00055648
SERENDIA-00055651-00055651
SERENDIA-00055653-00055653
SERENDIA-00055654-00055654
SERENDIA-00068171-00068171
SERENDIA-00068172-00068172
SERENDIA-00068174-00068174
SERENDIA-00068900-00068900
SERENDIA-00068906-00068959
SERENDIA-00069121-00069130
SERENDIA-00069178-00069244
SERENDIA-00069245-00069311
SERENDIA-00069312-00069378
SERENDIA-00070603-00070607
SERENDIA-00070610-00070611
SERENDIA-00070612-00070613 SEREN-
DIA-00075565-00075566
SERENDIA-00075567-00075568
SERENDIA-00075657-00075659
SERENDIA-00075660-00075660
SERENDIA-00075661-00075661
SERENDIA-00075664-00075664
SERENDIA-00075665-00075665
SERENDIA-00075666-00075666
SERENDIA-00075669-00075669
SERENDIA-00075670-00075670
SERENDIA-00075671-00075671
SERENDIA-00075672-00075672

VIOL-00004318-00004404
VIOL-00004405-00004466
VIOL-00004507-00004591
VIOL-00005617-00005625
VIOL-00005697-00005719
VIOL-00005720-00005790
VIOL-00005791-00005819
VIOL-00005820-00005864
VIOL-00005950-00005957
VIOL-00005958-00005963
VIOL-00005969-00006029
VIOL-00006030-00006059
VIOL-00006076-00006172
VIOL-00006173-00006210
VIOL-00006362-00006362
VIOL-00006364-00006364
VIOL-00006365-00006366
VIOL-00006367-00006368
VIOL-00006369-00006369
VIOL-00006370-00006371
VIOL-00006372-00006395
VIOL-00006406-00006411
VIOL-00006412-00006417
VIOL-00006559-00006559
VIOL-00006560-00006560
VIOL-00006572-00006577
VIOL-00006578-00006583
VIOL-00006584-00006589
VIOL-00006590-00006595
VIOL-00006602-00006603
VIOL-00006604-00006604
VIOL-00006605-00006605
VIOL-00006606-00006606
VIOL-00006607-00006607
VIOL-00006656-00006656
VIOL-00006658-00006659
VIOL-00006660-00006661
VIOL-00006663-00006664
VIOL-00006666-00006666
VIOL-00006667-00006668
VIOL-00006669-00006670
VIOL-00006671-00006672
VIOL-00006673-00006674
VIOL-00006675-00006676
VIOL-00006677-00006678
VIOL-00006679-00006680

[redacted]

SERENDIA-00075673-00075673
SERENDIA-00075674-00075674
SERENDIA-00075675-00075675
SERENDIA-00075676-00075676
SERENDIA-00075677-00075677
SERENDIA-00075678-00075678
SERENDIA-00075679-00075679
SERENDIA-00075680-00075680
SERENDIA-00075681-00075681
SERENDIA-00075682-00075682
SERENDIA-00075683-00075683
SERENDIA-00075684-00075684
SERENDIA-00075685-00075685
SERENDIA-00075686-00075686
SERENDIA-00075687-00075687
SERENDIA-00075688-00075688
SERENDIA-00075690-00075690
SERENDIA-00075693-00075693

VIOL-00006681-00006682
VIOL-00006683-00006684
VIOL-00006685-00006686
VIOL-00006687-00006688
VIOL-00006689-00006690
VIOL-00006691-00006692
VIOL-00006693-00006693
VIOL-00006697-00006698
VIOL-00006699-00006700
VIOL-00006701-00006706
VIOL-00006707-00006712
VIOL-00006713-00006718
VIOL-00006719-00006724
VIOL-00006774-00006775

2. Commercial Success

Benev's global and domestic sales of the Sylfirm X, as well as the percentage those sales comprise out of Benev's total product sales for 2021 and 2022 are provided in the table below, and evidence the commercial success of the Sylfirm X product.

Benev's Global Domestic Industry Product Sales				
Product	**2021**		**2022**	
	Sales Amount	**Percentage**	**Sales Amount**	**Percentage**
Sylfirm X	$5,495,600	43.40%	$13,966,585	52.91%
Sylfirm X Tips	$223,803	1.77%	$1,579,570	5.98%

BENEV-00001030.

Benev's U.S. Domestic Industry Product Sales				
Product	**2021**		**2022**	
	Sales Amount	**Percentage**	**Sales Amount**	**Percentage**
Sylfirm X	$5,495,600	43.40%	$13,916,585	52.72%
Sylfirm X Tips	$223,803	1.77%	$1,579,570	5.98%

BENEV-00001030.

Indeed, the Sylfirm X product quickly gained market share because of the patented technology. *See e.g.*, VIOL-00001420-00001448. The authorizations conferred in the distribution

[redacted]

agreements and express license confirms Benev was authorized to use the SylfirmX since at least November 26, 2020, and that SylfirmX was protected by the patents since at least November 26, 2020. *See* SERENDIA-00005723, SERENDIA-00005733, SERENDIA-00005744, BENEV-00001084, BENEV-00000046, BENEV-00000048, BENEV-00001030, BENEV-00001183-1193, BENEV-00001264.

In 2021, Benev's total operating expenditures were approximately $6,241,011. BENEV-00000056. In 2022, Benev's total operating expenditures were approximately $17,404,592. BENEV-00001077. Benev's 2023 budget forecast is provided at BENEV-00000051. *See also* BENEV-00000063. Benev's 2023 budget forecast is provided at BENEV-00000051. In addition to the above, Benev has produced additional sales information that may inform any sales-based allocation. *See e.g.,* BENEV-00000046, BENEV-00000048. Benev's continual investment in the Sylfirm X product further shows the commercial success and viability of the Asserted Claims of the Asserted Patents.

In particular, Benev has made qualitatively and quantitatively significant investments in plant and equipment associated with the research and development, customer support, product support, quality assurance, installation and customer training, and warranty services for the Sylfirm X Product. *See* Interrogatory 37, COMPLAINANT'S FIRST SUPPLEMENTAL RESPONSES AND OBJECTIONS TO RESPONDENTS FIRST SET OF INTERROGATORIES; *see also* Interrogatory 37, COMPLAINANT'S SECOND SUPPLEMENTAL RESPONSES AND OBJECTIONS TO RESPONDENTS FIRST SET OF INTERROGATORIES. Benev has also made qualitatively and quantitatively significant investments in labor and capital associated with the Sylfirm X Product. *Id*.

Likewise, ViOL's global and domestic sales of the Sylfirm X, as well as the percentage those sales comprise out of ViOL's total product sales evidence the commercial success of the

Sylfirm X product. *See e.g.,* VIOL-00001611, VIOL-00001611; *see also Lindemann Maschinenfabrik GMBH v. American Hoist and Derrick Co.*, 730 F.2d 1452, 1461 (Fed. Cir. 1984) ("The district court improperly discounted the weight due the evidence of commercial success because that success occurred abroad.") Likewise, ViOL's investment in the design, development, and manufacturing of the Sylfirm X product, evidence its commercial success. *See e.g.,* VIOL-00004959.

The "success of [] infringing product[s]" is also evidence of commercial success. *See Brown & Williamson Tobacco Corp. v. Philip Morris Inc.,* 229 F.3d 1120, 1130 (Fed. Cir. 2000). Therefore, pursuant to Rule 210.29(c) Complainant identifies JEISYS' AND CYNOSURE'S RESPONSE TO STAFF'S INTERROGATORY NO. 3 and supplements thereto, JEISYS' AND CYNOSURE'S RESPONSE TO SERENDIA'S INTERROGATORY NO. 4 and any supplements thereto, ILOODA'S RESPONSE TO STAFF'S INTERROGATORY NO. 3 and any supplements thereto, CUTERA'S RESPONSE TO STAFF'S INTERROGATORY NO. 3 and any supplements thereto, ILOODA'S RESPONSE TO SERENDIA'S INTERROGATORY NO. 4 and any supplements thereto, CUTERA'S RESPONSE TO SERENDIA'S INTERROGATORY NO. 4 and any supplements thereto, ENDYMED'S RESPONSE TO STAFF'S INTERROGATORY NO. 3 and any supplements thereto, LUTRONIC'S RESPONSE TO SERENDIA'S INTERROGATORY NO. 4 and any supplements thereto, and SHENB'S RESPONSE TO SERENDIA'S INTERROGATORY NO. 4 and any supplements thereto.

Pursuant to Rule 210.29(c), Complainant identifies the following documents sufficient for Respondents to derive or ascertain the requested information:

SERENDIA-00005703-00005710, SERENDIA-00005711-00005722, SERENDIA-00005723-00005732, SERENDIA-00005733-00005743, SERENDIA-00005744-00005758, BENEV-00000046, BENEV-00000048, BENEV-00001030, LUTRONIC-ITC00001312;

[redacted]

SERENDIA-00007160-00007167, SERENDIA-00005703-00005710, SERENDIA-00005711-00005722, SERENDIA-00005723-00005732, SERENDIA-00005733-00005743, SERENDIA-00005744-00005758, VIOL-00001400, VIOL-00001033, VIOL-00001401, VIOL-00001402, BENEV-00000001, BENEV-00000002, BENEV-00000005, BENEV-00000006, BENEV-00000007, BENEV-00001033, BENEV-00000527, BENEV-00000536, BENEV-00000546, BENEV-00000560, BENEV-00000574, BENEV-00000588, BENEV-00000602, BENEV-00000616, BENEV-00000630, BENEV-00000644, BENEV-00000658, BENEV-00000671, BENEV-00000686, BENEV-00000700, BENEV-00000714, BENEV-00000728, BENEV-00000742, BENEV-00000051, BENEV-00000056, BENEV-00000063, BENEV-00000070, BENEV-00000046, BENEV-00000048, BENEV-00000052, BENEV-00001030, BENEV-00000907, BENEV-00001008, BENEV-00001009, BENEV-00001032, BENEV-00001010, BENEV-00001011, BENEV-00001012, BENEV-00001013, BENEV-00001014, BENEV-00001015, BENEV-00001016, BENEV-00001017, BENEV-00001018, BENEV-00001019, BENEV-00001020, BENEV-00001022, BENEV-00001026, BENEV-00000050, BENEV-00000072, BENEV-00000856, BENEV-00000865, BENEV-00000866, BENEV-00000045, BENEV-00000857, BENEV-00000858, BENEV-00000859, BENEV-00000860, BENEV-00000861, BENEV-00000862, BENEV-00000863, BENEV-00000864, BENEV-00000868, BENEV-00000869, BENEV-00000870, BENEV-00000872, BENEV-00000878, BENEV-00000882, BENEV-00000883, BENEV-00000884, BENEV-00000885, BENEV-00000886, BENEV-00000047, BENEV-00000053, BENEV-00000054, BENEV-00000075, BENEV-00000076, BENEV-00000077, BENEV-00000087, BENEV-00000088, BENEV-00000089, BENEV-00000090, BENEV-00000091, BENEV-00000092, BENEV-00000093, BENEV-00000094, BENEV-00000095, BENEV-00000096, BENEV-00000097, BENEV-00000098,

[redacted]

BENEV-00000099, BENEV-00000100, BENEV-00000101, BENEV-00000102, BENEV-00000103, BENEV-00000104, BENEV-00000105, BENEV-00000106, BENEV-00000107, BENEV-00000108, BENEV-00000109, BENEV-00000110, BENEV-00000111, BENEV-00000112, BENEV-00000113, BENEV-00000114, BENEV-00000115, BENEV-00000116, BENEV-00000117, BENEV-00000118, BENEV-00000119, BENEV-00000120, BENEV-00000121, BENEV-00000122, BENEV-00000123, BENEV-00000124, BENEV-00000125, BENEV-00000126, BENEV-00000127, BENEV-00000128, BENEV-00000129, BENEV-00000130, BENEV-00000131, BENEV-00000132, BENEV-00000133, BENEV-00000134, BENEV-00000135, BENEV-00000136, BENEV-00000137, BENEV-00000138, BENEV-00000139, BENEV-00000140, BENEV-00000141, BENEV-00000142, BENEV-00000143, BENEV-00000144, BENEV-00000145, BENEV-00000146, BENEV-00000147, BENEV-00000148, BENEV-00000149, BENEV-00000150, BENEV-00000151, BENEV-00000152, BENEV-00000153, BENEV-00000154, BENEV-00000155, BENEV-00000156, BENEV-00000157, BENEV-00000158, BENEV-00000159, BENEV-00000160, BENEV-00000161, BENEV-00000162, BENEV-00000163, BENEV-00000164, BENEV-00000165, BENEV-00000166, BENEV-00000167, BENEV-00000168, BENEV-00000169, BENEV-00000170, BENEV-00000171, BENEV-00000172, BENEV-00000173, BENEV-00000174, BENEV-00000175, BENEV-00000176, BENEV-00000177, BENEV-00000178, BENEV-00000179, BENEV-00000180, BENEV-00000181, BENEV-00000469, BENEV-00000470, BENEV-00000471, BENEV-00000472, BENEV-00000473, BENEV-00000478, BENEV-00000479, BENEV-00000486, BENEV-00000487, BENEV-00000488, BENEV-00000495, BENEV-00000496, BENEV-00000497, BENEV-00000500, BENEV-00000504, BENEV-00000510, BENEV-00000512, BENEV-00000513, BENEV-00000514, BENEV-00000522, BENEV-

[redacted]

00000523, BENEV-00000526, BENEV-00000756, BENEV-00000759, BENEV-00000760, BENEV-00000761, BENEV-00000762, BENEV-00000763, BENEV-00000764, BENEV-00000765, BENEV-00000766, BENEV-00000767, BENEV-00000768, BENEV-00000769, BENEV-00000770, BENEV-00000771, BENEV-00000772, BENEV-00000773, BENEV-00000774, BENEV-00000775, BENEV-00000776, BENEV-00000777, BENEV-00000778, BENEV-00000779, BENEV-00000780, BENEV-00000781, BENEV-00000782, BENEV-00000783, BENEV-00000784, BENEV-00000785, BENEV-00000786, BENEV-00000787, BENEV-00000788, BENEV-00000789, BENEV-00000790, BENEV-00000791, BENEV-00000792, BENEV-00000793, BENEV-00000794, BENEV-00000795, BENEV-00000796, BENEV-00000797, BENEV-00000798, BENEV-00000799, BENEV-00000800, BENEV-00000801, BENEV-00000802, BENEV-00000803, BENEV-00000804, BENEV-00000805, BENEV-00000806, BENEV-00000807, BENEV-00000808, BENEV-00000809, BENEV-00000810, BENEV-00000811, BENEV-00000812, BENEV-00000813, BENEV-00000814, BENEV-00000815, BENEV-00000816, BENEV-00000817, BENEV-00000818, BENEV-00000819, BENEV-00000820, BENEV-00000821, BENEV-00000822, BENEV-00000823, BENEV-00000824, BENEV-00000825, BENEV-00000826, BENEV-00000827, BENEV-00000828, BENEV-00000829, BENEV-00000830, BENEV-00000831, BENEV-00000832, BENEV-00000833, BENEV-00000834, BENEV-00000835, BENEV-00000836, BENEV-00000837, BENEV-00000838, BENEV-00000839, BENEV-00000840, BENEV-00000841, BENEV-00000842, BENEV-00000843, BENEV-00000844, BENEV-00000845, BENEV-00000846, BENEV-00000847, BENEV-00000848, BENEV-00000849, BENEV-00000850, BENEV-00000851, BENEV-00000852, BENEV-00000853, BENEV-00000854, BENEV-00000855, BENEV-00000239, BENEV-00000241, BENEV-00000242, BENEV-00000243,

[redacted]

BENEV-00000244, BENEV-00000245, BENEV-00000249, BENEV-00000251, BENEV-00000253, BENEV-00000255, BENEV-00000257, BENEV-00000259, BENEV-00000261, BENEV-00000262, BENEV-00000263, BENEV-00000264, BENEV-00000265, BENEV-00000266, BENEV-00000267, BENEV-00000268, BENEV-00000269, BENEV-00000270, BENEV-00000271, BENEV-00000272, BENEV-00000273, BENEV-00000274, BENEV-00000275, BENEV-00000276, BENEV-00000277, BENEV-00000278, BENEV-00000279, BENEV-00000280, BENEV-00000281, BENEV-00000282, BENEV-00000283, BENEV-00000284, BENEV-00000285, BENEV-00000286, BENEV-00000287, BENEV-00000288, BENEV-00000289, BENEV-00000290, BENEV-00000291, BENEV-00000292, BENEV-00000293, BENEV-00000294, BENEV-00000295, BENEV-00000296, BENEV-00000304, BENEV-00000314, BENEV-00000317, BENEV-00000320, BENEV-00000323, BENEV-00000324, BENEV-00000325, BENEV-00000326, BENEV-00000327, BENEV-00000328, BENEV-00000329, BENEV-00000330, BENEV-00000331, BENEV-00000332, BENEV-00000333, BENEV-00000334, BENEV-00000335, BENEV-00000336, BENEV-00000337, BENEV-00000338, BENEV-00000339, BENEV-00000340, BENEV-00000341, BENEV-00000342, BENEV-00000343, BENEV-00000344, BENEV-00001035, BENEV-00001036, BENEV-00001046, BENEV-00001047, BENEV-00001048, BENEV-00001049, BENEV-00001050, BENEV-00001051, BENEV-00001052, BENEV-00001053, BENEV-00001054, BENEV-00001055, BENEV-00001058, BENEV-00001059, BENEV-00000049, BENEV-00000923, BENEV-00000924, BENEV-00000925, BENEV-00000926, BENEV-00000927, BENEV-00000928, BENEV-00000929, BENEV-00000930, BENEV-00000931, BENEV-00000932, BENEV-00000933, BENEV-00000934, BENEV-00000936, BENEV-00000938, BENEV-00000939, BENEV-00000940, BENEV-00000941, BENEV-00000943, BENEV-

[redacted]

00000945, BENEV-00000947, BENEV-00000948, BENEV-00000950, BENEV-00000952, BENEV-00000954, BENEV-00000956, BENEV-00000957, BENEV-00000958, BENEV-00000959, BENEV-00000960, BENEV-00000961, BENEV-00000963, BENEV-00000965, BENEV-00000967, BENEV-00000969, BENEV-00000970, BENEV-00000972, BENEV-00000974, BENEV-00000976, BENEV-00000977, BENEV-00000978, BENEV-00000980, BENEV-00000981, BENEV-00000982, BENEV-00000985, BENEV-00000987, BENEV-00000988, BENEV-00000989, BENEV-00000990, BENEV-00000991, BENEV-00000992, BENEV-00000993, BENEV-00000994, BENEV-00000995, BENEV-00001000, BENEV-00001004, BENEV-00001006, BENEV-00001007, BENEV-00000055, BENEV-00000888, BENEV-00000889, BENEV-00000890, BENEV-00000891, BENEV-00000892, BENEV-00000893, BENEV-00000894, BENEV-00000895, BENEV-00000896, BENEV-00000897, BENEV-00000898, BENEV-00000899, BENEV-00000900, BENEV-00000901, BENEV-00000902, BENEV-00000903, BENEV-00000904, BENEV-00000905, BENEV-00000906, BENEV-00000909, BENEV-00000910, BENEV-00000913, BENEV-00000182, BENEV-00000183, BENEV-00000184, BENEV-00000185, BENEV-00000186, BENEV-00000187, BENEV-00000188, BENEV-00000189, BENEV-00000190, BENEV-00000191, BENEV-00000192, BENEV-00000193, BENEV-00000194, BENEV-00000195, BENEV-00000196, BENEV-00000197, BENEV-00000202, BENEV-00000203, BENEV-00000204, BENEV-00000205, BENEV-00000206, BENEV-00000207, BENEV-00000208, BENEV-00000209, BENEV-00000210, BENEV-00000211, BENEV-00000214, BENEV-00000215, BENEV-00000216, BENEV-00000217, BENEV-00000218, BENEV-00000219, BENEV-00000220, BENEV-00000221, BENEV-00000222, BENEV-00000223, BENEV-00000224, BENEV-00000225, BENEV-00000226, BENEV-00000227, BENEV-00000228, BENEV-00000229,

BENEV-00000230, BENEV-00000231, BENEV-00000232, BENEV-00000233, BENEV-00000234, BENEV-00000235, BENEV-00000236, BENEV-00000237, BENEV-00000238, BENEV-00001060, BENEV-00001061; BENEV-00001062; BENEV-00001077, BENEV-00001084, BENEV-00001098, BENEV-00001112, BENEV-00001126, BENEV-00001140, BENEV-00001142, BENEV-00001144, BENEV-00001146, BENEV-00001181, BENEV-00001183, BENEV-00001184, BENEV-00001185, BENEV-00001186, BENEV-00001187, BENEV-00001188, BENEV-00001189, BENEV-00001190, BENEV-00001191, BENEV-00001192, BENEV-00001193, BENEV-00001194, BENEV-00001228, BENEV-00001231, BENEV-00001234, BENEV-00001236, BENEV-00001238, BENEV-00001239, BENEV-00001242, BENEV-00001260, BENEV-00001262, BENEV-00001264, BENEV-00001265, BENEV-00001266, BENEV-00001267, BENEV-00001268, BENEV-00001269-1433, BENEV-00001434, BENEV-00001435, BENEV-00001436, BENEV-00001437.

b. Industry Praise and Peer Recognition

In addition to the evidence already discussed above, the patented functionalities have been recognized through numerous awards and accolades. For example, in 2020 the manufacturer of the Sylfirm X, ViOL won the "World-Class Product of Korea" award from the Minister of Trade, Industry & Energy of South Korea, due to its contributions to and developments towards Aesthetic Medical Devices, like the Sylfirm X. *See* VIOL-00001033.

Likewise, respected key opinion leaders in the industry, such as Dr. Randy Miller and Dr. Seiko Kou, have favorably reviewed the Sylfirm X device. *See e.g.,* VIOL-00001400. There has been specific praise for the commercial technology embodied by the '836, '379, and '444 Patents. For example, Renato Saltz, MD, director of Saltz Plastic Surgery (Park City and Salt Lake City, Utah), stated that "Dr. Na is a mastermind, he didn't just settle for good when developing an RF microneedling device, he de-signed the only RF microneedling device you will ever

need." *See* VIOL-00001011 (K. Wilson, The Aesthetic Guide, *Leading Regenerative Therapies Creating a Paradigm Shift in Aesthetic Medicine* (March 2022)) at VIOL-00001013. Dr. Saltz goes on to explain that the "patented PW mode and 300-micron depth, harnessing the 'Na Effect' [] is what really sets it apart from the pack and highlights why it is a leader." *Id*. Dr. Raminder Saluja, MD, director of Saluja Cosmetic and Laser Center (Huntsville, N.C.) explained that the "[s]ofter, more selective coagulation" "is something that I truly have seen the results for myself." *Id*. at VIOL-00001016. Likewise, Dr. JD McCoy, NMD explains that "SYLFIRM X is the only device that is able to deliver energy to the right place, at the right focus, and at the right timing." *See* https://www.benev.com/sylfirmx-treatment. Dr. Martin Braun explains that the "Na effect, providing safe effective treatment because the tear drop shaped thermal effect minimizes heat damage to the epidermis and maximizes the therapeutic effect at the target." *See* VIOL-00001020 (M. Braun, *Sylfirm X Revolutionizes the Clinical Application of RF Microneedling* (May 2022)) at VIOL-00001022.

Likewise, the named inventor of the Asserted Patents, Dr. Na, has been called the "Father of Microneedling" and radio frequency (RF) microneedling. In 2015, Dr. Na published an article in Scientific Reports, an open-access journal from the prestigious journal Nature that publishes rigorously peer-reviewed research, that demonstrated the RF-induced coagulation around each microneedle. *See generally* SERENDIA-00014557 (Na Paper). In that article, the authors proposed calling this new effect of independent tissue coagulation around each electrode a "Na effect," naming it after Dr. Na. Persons skilled in the field now refer to this "Na effect" in scientific literature. The approach Dr. Na developed allows for improving the appearance of skin while reducing pain and potential scarring and allowing for less downtime between treatments.

The needle assembly of Sylfirm X product, which practices the '536, '718, and '812

Patents, has also received specific praise, because "unlike other RF microneedling devices, where the needle is inserted and strongly ejected rapidly like a staple gun, the needle tip of SYLFIRM X is designed to be inserted into the skin very smoothly, reducing pain, skin tearing, bleeding and bruising issues." *See* VIOL-00001020 (M. Braun, *Sylfirm X Revolutionizes the Clinical Application of RF Microneedling* (May 2022)) at VIOL-00001022. The beneficial use of both patented technologies, by the Sylfirm X, has been praised extensively in a number of academic papers. *See generally* VIOL-00000216-00000249 (SYLFIRM X - Clinical Paper Summary); SERENDIA-00022192 (Sylfirm X Patient Brochure) at SERENDIA-00022205; and the papers cited and discussed therein.

Likewise, patented technology has become widely recognized and is extensively copied and advertised by Respondents and used in conjunction with multiple infringing products. *See e.g.*, **Exhibits 1 through 42** to COMPLAINANT'S FIRST SUPPLEMENTAL RESPONSES AND OBJECTIONS TO RESPONDENTS FIRST SET OF INTERROGATORIES **Exhibits 55 through 102** to COMPLAINANT'S SECOND SUPPLEMENTAL RESPONSES AND OBJECTIONS TO RESPONDENTS FIRST SET OF INTERROGATORIES; Interrogatories 1-4, COMPLAINANT'S SECOND SUPPLEMENTAL RESPONSES AND OBJECTIONS TO RESPONDENTS FIRST SET OF INTERROGATORIES. Additionally, pursuant to Rule 210.29(c), Complainant identifies the following documents sufficient for Respondents to derive or ascertain the requested information:

SERENDIA-00081366-00081366	SERENDIA-00081537-00081537
SERENDIA-00081367-00081367	SERENDIA-00081538-00081538
SERENDIA-00081368-00081370	SERENDIA-00081539-00081539
SERENDIA-00081371-00081377	SERENDIA-00081540-00081540
SERENDIA-00081378-00081383	SERENDIA-00081541-00081541
SERENDIA-00081384-00081384	SERENDIA-00081542-00081542
SERENDIA-00081385-00081385	SERENDIA-00081543-00081543
SERENDIA-00081386-00081386	SERENDIA-00081544-00081544
SERENDIA-00081387-00081387	SERENDIA-00081545-00081545
SERENDIA-00081388-00081388	SERENDIA-00081546-00081546

[redacted]

SERENDIA-00081389-00081389
SERENDIA-00081390-00081390
SERENDIA-00081391-00081391
SERENDIA-00081392-00081392
SERENDIA-00081393-00081393
SERENDIA-00081394-00081394
SERENDIA-00081395-00081395
SERENDIA-00081396-00081396
SERENDIA-00081397-00081397
SERENDIA-00081398-00081398
SERENDIA-00081399-00081399
SERENDIA-00081400-00081400
SERENDIA-00081401-00081401
SERENDIA-00081402-00081402
SERENDIA-00081403-00081403
SERENDIA-00081404-00081404
SERENDIA-00081405-00081405
SERENDIA-00081406-00081406
SERENDIA-00081407-00081407
SERENDIA-00081408-00081408
SERENDIA-00081409-00081411
SERENDIA-00081412-00081414
SERENDIA-00081415-00081418
SERENDIA-00081419-00081425
SERENDIA-00081426-00081427
SERENDIA-00081428-00081430
SERENDIA-00081431-00081433
SERENDIA-00081434-00081436
SERENDIA-00081437-00081439
SERENDIA-00081440-00081444
SERENDIA-00081445-00081447
SERENDIA-00081448-00081450
SERENDIA-00081451-00081453
SERENDIA-00081454-00081456
SERENDIA-00081457-00081459
SERENDIA-00081460-00081462
SERENDIA-00081463-00081468
SERENDIA-00081469-00081471
SERENDIA-00081472-00081474
SERENDIA-00081475-00081477
SERENDIA-00081478-00081480
SERENDIA-00081481-00081483
SERENDIA-00081484-00081486
SERENDIA-00081487-00081489
SERENDIA-00081490-00081492
SERENDIA-00081493-00081496
SERENDIA-00081547-00081547
SERENDIA-00081548-00081548
SERENDIA-00081549-00081549
SERENDIA-00081550-00081550
SERENDIA-00081551-00081551
SERENDIA-00081552-00081552
SERENDIA-00081553-00081553
SERENDIA-00081554-00081554
SERENDIA-00081555-00081555
SERENDIA-00081556-00081556
SERENDIA-00081557-00081557
SERENDIA-00081558-00081558
SERENDIA-00081559-00081559
SERENDIA-00081560-00081560
SERENDIA-00081561-00081561
SERENDIA-00081562-00081562
SERENDIA-00081563-00081563
SERENDIA-00081564-00081564
SERENDIA-00081565-00081565
SERENDIA-00081566-00081566
SERENDIA-00081567-00081567
SERENDIA-00081568-00081568
SERENDIA-00081569-00081569
SERENDIA-00081570-00081570
SERENDIA-00081571-00081571
SERENDIA-00081572-00081572
SERENDIA-00081573-00081573
SERENDIA-00081574-00081574
SERENDIA-00081575-00081575
SERENDIA-00081576-00081576
SERENDIA-00081577-00081577
SERENDIA-00081578-00081578
SERENDIA-00081579-00081579
SERENDIA-00081580-00081580
SERENDIA-00081581-00081581
SERENDIA-00081582-00081582
SERENDIA-00081583-00081583
SERENDIA-00081584-00081584
SERENDIA-00081585-00081585
SERENDIA-00081586-00081586
SERENDIA-00081587-00081587
SERENDIA-00081588-00081588
SERENDIA-00081589-00081589
SERENDIA-00081590-00081590
SERENDIA-00081591-00081591
SERENDIA-00081592-00081592

[redacted]

SERENDIA-00081497-00081502
SERENDIA-00081503-00081508
SERENDIA-00081509-00081514
SERENDIA-00081515-00081515
SERENDIA-00081516-00081516
SERENDIA-00081517-00081517
SERENDIA-00081518-00081518
SERENDIA-00081519-00081519
SERENDIA-00081520-00081520
SERENDIA-00081521-00081521
SERENDIA-00081522-00081522
SERENDIA-00081523-00081523
SERENDIA-00081524-00081524
SERENDIA-00081525-00081525
SERENDIA-00081526-00081526
SERENDIA-00081527-00081527
SERENDIA-00081528-00081528
SERENDIA-00081529-00081529
SERENDIA-00081530-00081530
SERENDIA-00081531-00081531
SERENDIA-00081532-00081532
SERENDIA-00081533-00081533
SERENDIA-00081534-00081534
SERENDIA-00081535-00081535
SERENDIA-00081536-00081536
SERENDIA-00081593-00081593
SERENDIA-00081594-00081594
SERENDIA-00081595-00081595
SERENDIA-00081596-00081596
SERENDIA-00081597-00081597
SERENDIA-00081598-00081598
SERENDIA-00081599-00081599
SERENDIA-00081600-00081600
SERENDIA-00081601-00081601
SERENDIA-00081602-00081602
SERENDIA-00081603-00081603
SERENDIA-00081604-00081604
SERENDIA-00081605-00081605
SERENDIA-00081606-00081606
SERENDIA-00081607-00081607
SERENDIA-00081608-00081608
SERENDIA-00081609-00081609
SERENDIA-00081610-00081610
SERENDIA-00081611-00081611
SERENDIA-00081612-00081612
SERENDIA-00081613-00081613
SERENDIA-00081614-00081614
SERENDIA-00081615-00081615
SERENDIA-00081616-00081616
SERENDIA-00081617-00081617
SERENDIA-00081618-00081618

The pertinent evidence of praise, as set forth above, is the direct result of the unique characteristics of the claimed inventions.

c. Long-Felt but Unfulfilled Need for the Inventions

Examples of the Asserted Patents fulfilling long-felt needs for each of their respective technologies is discussed, at least, in the relevant specifications of each Asserted Patent and their file histories, which Complainant incorporates here by reference. In addition, many academic papers and studies detail unfilled issues in the prior art that were solved by the Asserted Patents, as discussed above. As also explained below, the PCT applications to which the Asserted Patents claim priority was published in 2012, which is also well before Respondents designed and/or begin selling the Accused Products. For example, as shown below:

[redacted]

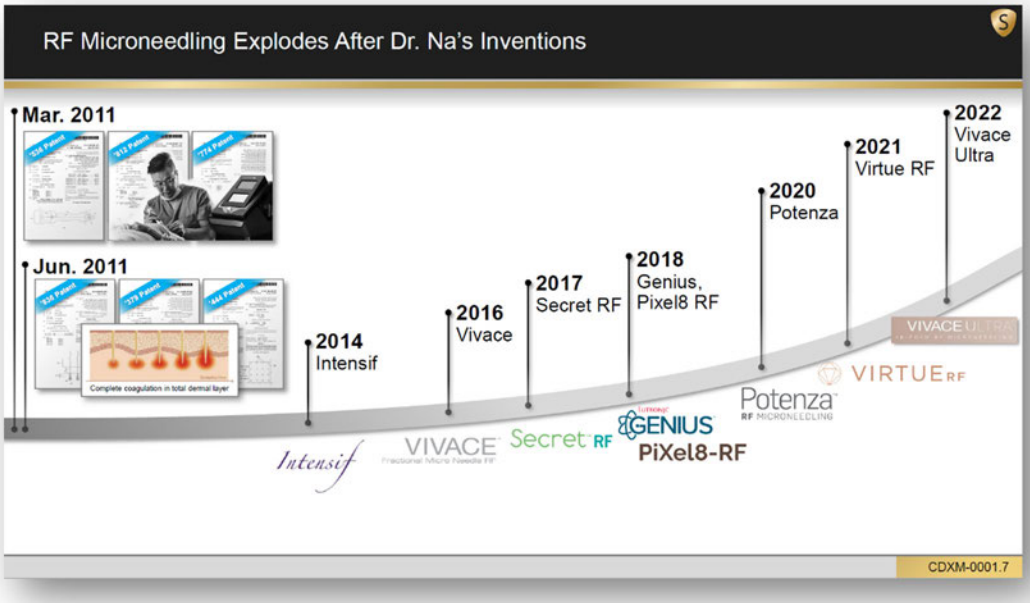

The '836, '379, and '444 Patents explain how prior art medical devices "include side effects, not limited to burning both epidermis and dermis between the needles, which may form a scar" and lack "finite control." *See* '836 Patent at 2:14-18. In particular, the '836, '379, and '444 Patents solve this issue by concentrating "heat" in "an area in dermis by the needle(s) to cause coagulation. The heat generated by the present invention may minimally affect the adjacent epidermis area. Also, the heated area around the needle end tips may be oval or tear shaped as shown in FIG. 5. In an embodiment heat may not be concentrated between needles. In an embodiment, the heated area may be around each needle." *See* '836 Patent at 3:20-29; *see also* Fig. 5 (below); *see also* **Exhibits 43 through 48** to COMPLAINANT'S FIRST SUPPLEMENTAL RESPONSES AND OBJECTIONS TO RESPONDENTS FIRST SET OF INTERROGATORIES; **Exhibits 55 through 102** to COMPLAINANT'S SECOND SUPPLEMENTAL RESPONSES AND OBJECTIONS TO RESPONDENTS FIRST SET OF INTERROGATORIES; Interrogatories 1-4, COMPLAINANT'S SECOND SUPPLEMENTAL RESPONSES AND OBJECTIONS TO RESPONDENTS FIRST SET OF INTERROGATORIES.

[redacted]

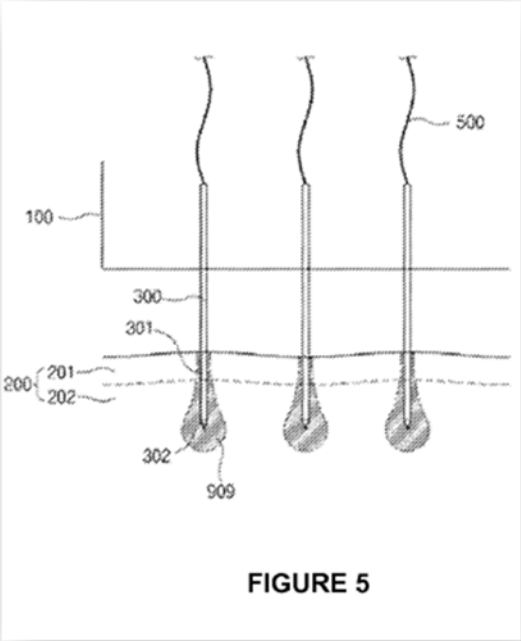

Long-felt and long-known issues with overheating, burning, and harming skin from applying too much energy to the skin is were well-documented, which could cause scaring, hyperpigmentation, and increased pain. *See generally* VIOL-00000216-00000249 (SYLFIRM X - Clinical Paper Summary); SERENDIA-00022192 (Sylfirm X Patient Brochure) at SERENDIA-00022205; and the papers cited and discussed therein; *supra* § VI.A.

Additionally, Dr. Na's 2015 Paper notes that his results "are not consistent with those of other studies on invasive bipolar RF or the basic concepts of electrical conduction theory." SERENDIA-00014557 (Na Paper) at SERENDIA-00014562. And, in particular, the authors "found no evidence of the propagation of electrical current between the electrodes in the micropig skin study." *Id*. Likewise, an April 2020 study explained that "[w]hen treating photoaging and scarring, it is important to avoid or minimize epidermal thermal damage to mitigate patient downtime and to avoid postinflammatory hyperpigmentation (PIH) or hypopigmentation from occurring." VEGA-00000364 at VEGA-00000365. The paper goes on to explain that "it is important to

minimize epidermal thermal damage to decrease patient discomfort and downtime" and explain that the device "resulted in a narrow and concentrated coagulation zone," using a bipolar configuration. *Id*. at VEGA-00000368.

The Asserted Patents solved these known issues with the prior art, as does the Slyfirm X product which practices the Asserted Patents. *See supra* § VII.C.1. For example, the "[s]ofter, more selective coagulation" provided by the "patented PW mode and 300-micron depth, harnessing the 'Na Effect' [] is what really sets it apart from the pack and highlights why it is a leader." *See* VIOL-00001011 (K. Wilson, The Aesthetic Guide, *Leading Regenerative Therapies Creating a Paradigm Shift in Aesthetic Medicine* (March 2022)) at VIOL-00001013. The "SYLFIRM X is the only device that is able to deliver energy to the right place, at the right focus, and at the right timing." *See* https://www.benev.com/sylfirmx-treatment. Dr. Martin Braun explains that the "Na effect, providing safe effective treatment because the tear drop shaped thermal effect minimizes heat damage to the epidermis and maximizes the therapeutic effect at the target." *See* VIOL-00001020 (M. Braun, *Sylfirm X Revolutionizes the Clinical Application of RF Microneedling* (May 2022)) at VIOL-00001022.

Therefore, prior to the Asserted Patents, prior art devices would burn both epidermis and dermis between the needles, an issue that was resolved by the invention of the Asserted Patents. *See generally* VIOL-00000216-00000249 (SYLFIRM X - Clinical Paper Summary); SERENDIA-00022192 (Sylfirm X Patient Brochure) at SERENDIA-00022205; the papers cited and discussed therein.

Likewise, the '536, '718, and '812 Patents describe a device with "one or more motors 922A, longitudinally extendable drive arms 922B, drive shaft 922C, outer casing 922D" such as the device shown in FIGS. 9C and 9D. *See* '536 Patent at 10:57-60. In particular, the "drive

arm(s) 922B may be coupled to one or more drive shafts 922C so the drive shafts may be moved longitudinally to deploy and retract one or more needles 924A when the MLM 922 is operatively coupled to the DNM 924." *See* '536 Patent at 10:61-11:2; Figs. 9 (below); *see also* **Exhibits 43 through 48** to COMPLAINANT'S FIRST SUPPLEMENTAL RESPONSES AND OBJECTIONS TO RESPONDENTS FIRST SET OF INTERROGATORIES; **Exhibits 55 through 102** to COMPLAINANT'S SECOND SUPPLEMENTAL RESPONSES AND OBJECTIONS TO RESPONDENTS FIRST SET OF INTERROGATORIES; Interrogatories 1-4, COMPLAINANT'S SECOND SUPPLEMENTAL RESPONSES AND OBJECTIONS TO RESPONDENTS FIRST SET OF INTERROGATORIES.

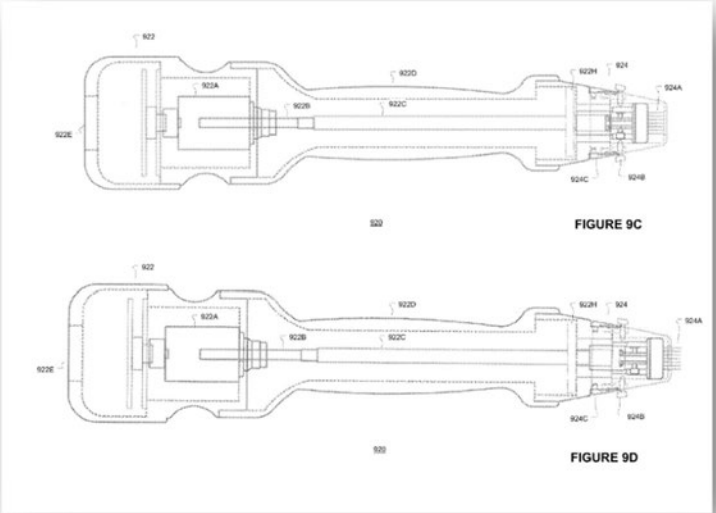

A Micro RF surgical system which drives RF signals through needles which are extended to a desired depth for treatment, solved many known and understood issues in the state of the Art. *See supra* § VI.B. "[U]nlike other RF microneedling devices, where the needle is inserted and strongly ejected rapidly like a staple gun, the needle tip of SYLFIRM X is designed to be inserted into the skin very smoothly, reducing pain, skin tearing, bleeding and bruising issues." *See* VIOL-00001020 (M. Braun, *Sylfirm X Revolutionizes the Clinical Application of RF Microneedling* (May 2022)) at VIOL-00001022; *see generally* VIOL-00000216-00000249

[redacted]

(SYLFIRM X - Clinical Paper Summary); SERENDIA-00022192 (Sylfirm X Patient Brochure) at SERENDIA-00022205; the papers cited and discussed therein.

The pertinent evidence of long-felt need and/or recognition of the problem, as set forth above, is the direct result of the unique characteristics of the claimed inventions.

d. Copying

As outlined below, Respondents admit they were aware of the Asserted Patents well before they designed and/or begin selling the Accused Products. Further, the PCT applications to which the Asserted Patents claim priority was published in 2012, which is also well before Respondents designed and/or begin selling the Accused Products. For example, as shown below:

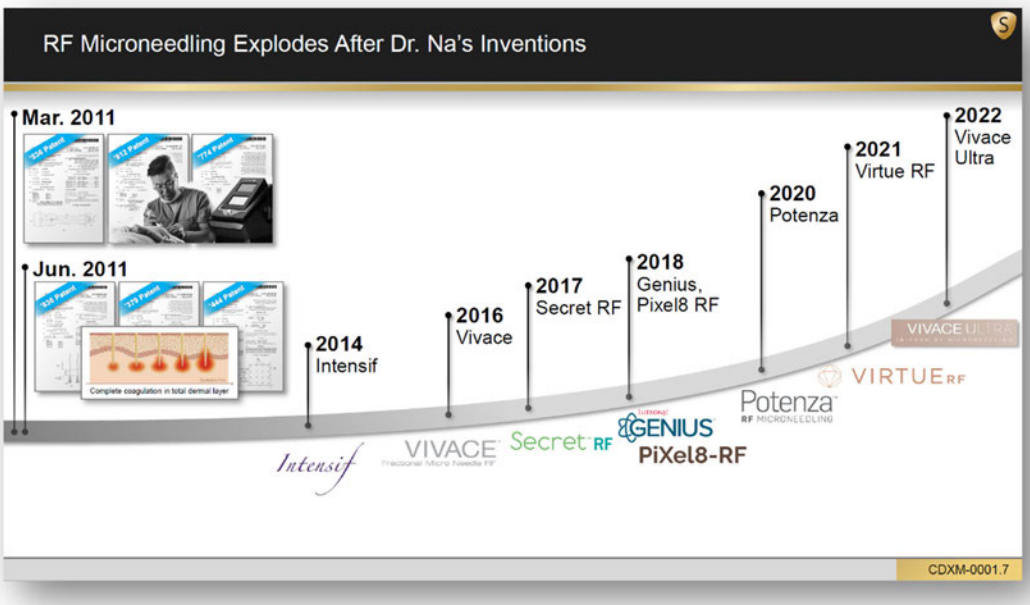

Discovery is ongoing, however, on information and belief, Complainant believes the evidence will show copying.

ABM: In particular, ABM admits that it first became aware of the asserted '536 and '836 Patents as early as February 9, 2018. *See* ABM'S RESPONSE TO COMPLAINANT'S

INTERROGATORY 8, and any supplements thereto. However, AB did not design its own infringing Vivace Ultra device until 2023.

SHEnB/Cartessa: In particular, SHEnB admits that it first became aware of the asserted '536 and '836 Patents as early as February 9, 2018. *See* SHENB'S RESPONSE TO COMPLAINANT'S INTERROGATORY 8, and any supplements thereto. However, SHEnB and Cartessa did not start importing the VirtueRF or Vybe RF devices until after 2020. *See* SHENB'S RESPONSE TO STAFF'S INTERROGATORY 2, and any supplements thereto; CARTESSA'S RESPONSE TO STAFF'S INTERROGATORY 2, and any supplements thereto. Likewise, SHEnB did not prepare its request for FDA clearance for the VirtueRF until January 22, 2021. *See* SERENDIA-00006578 (VirtueRF 510(k)).

* * *

Pursuant to Rule 210.29(c), Complainant identifies the following documents from which information requested by this Interrogatory may be ascertained or derived:

Cutera-0000493-0000493	JEISYS0062464-0062476
Cutera-0000818-0000818	JEISYS0062477-0062490
Cutera-0001149-0001149	JEISYS0062491-0062505
EndyMedITC1356_010999-011007	JEISYS0062506-0062519
EndyMedITC1356_024433-024438	JEISYS0062520-0062533
EndyMedITC1356_024439-024443	JEISYS0062534-0062546
EndyMedITC1356_024444-024452	JEISYS0062547-0062559
EndyMedITC1356_024462-024466	JEISYS0082868-0082881
EndyMedITC1356_024467-024474	JEISYS0082905-0082915
EndyMedITC1356_024475-024478	JEISYS0085668-0085681

[redacted]

EndyMedITC1356_024505-024508
EndyMedITC1356_024509-024514
EndyMedITC1356_024515-024516
EndyMedITC1356_024521-024522
EndyMedITC1356_024523-024524
EndyMedITC1356_024525-024531
EndyMedITC1356_024536-024542
EndyMedITC1356_024558-024559
EndyMedITC1356_024561-024562
EndyMedITC1356_024564-024573
EndyMedITC1356_024575-024576
EndyMedITC1356_024577-024698
EndyMedITC1356_024699-024699
EndyMedITC1356_024700-024744
EndyMedITC1356_024745-024747
EndyMedITC1356_024748-024764
EndyMedITC1356_024765-024858
EndyMedITC1356_024908-024913
EndyMedITC1356_024914-024920
Ilooda-0006178-0006204
Ilooda-0006831-0006855
Ilooda-0007250-0007264
Ilooda-0007603-0007641
JEISYS0060565-0060578
JEISYS0062411-0062424
JEISYS0062426-0062439
JEISYS0085920-0085933
JEISYS0086177-0086187
JEISYS0086188-0086198
JEISYS0086415-0086425
JEISYS0086681-0086701
JEISYS0086702-0086777
LUTRONIC-ITC00149929-00149984
RA0000955-0000963
RA0002725-0002726
RA0002952-0002985
RA0002992-0003024
RA0004099-0004123
RA0004527-0004548
RA0004654-0004654
RA0004767-0004767
RA0005443-0005443
RA0005444-0005444
RA0005578-0005621
RA0005622-0005660
RA0006727-0006780
RA0006782-0006823
RA0013437-0013437
RA0013438-0013438
SHENB-ITC1356-007465-007473
SHENB-ITC1356-009888-009911

Discovery is ongoing and Complainant believes the evidence will show copying of the inventions of the Asserted Claims of the Asserted Patents.

a. Teaching Away

To the extent that teaching away is considered a secondary indication of nonobviousness, Complainant contends that the prior art as a whole taught away from the subject matter of the Asserted Claims. Complainant hereby incorporates the facts demonstrating same that have been set forth with regard to the patent-specific responses to Respondents' invalidity contentions.

b. Absence of Contemporaneous Invention

To the extent that the absence of any contemporaneous inventions is considered a

[redacted]

secondary indication of nonobviousness, Complainant contends that the prior art as a whole failed to teach the inventions disclosed in the Asserted Claims. Complainant hereby incorporates the facts demonstrating same that have been set forth with regard to the patent-specific responses to Respondents' invalidity contentions.

VII. 35 U.S.C § 112

As stated above, the Asserted Patents, and each and every one of their constituent claims, are presumed to be valid. 35 U.S.C. § 282. "A party asserting invalidity based on 35 U.S.C. § 112 bears no less a burden and no fewer responsibilities than any other patent challenger." *Ralston Purina Co. v. Far-Mar-Co, Inc.*, 772 F.2d 1570, 1574 (Fed. Cir. 1985). Accordingly, Respondents bear the burden of proving—on a claim-by-claim basis and by clear and convincing evidence—that specific claims fail to satisfy the requirements of 35 U.S.C. § 112.[34]

To establish invalidity based on a lack of written description, Respondents must establish by clear and convincing evidence that the written description fails to describe an invention sufficiently to convey to a POSITA that the patentee possessed the claimed invention at the time of the application. *Ariad Pharm., Inc. v. Eli Lilly & Co.*, 598 F.3d 1336, 1349-51 (Fed. Cir. 2010) (*en banc*).

To establish invalidity based on enablement, Respondents must show by clear and convincing evidence that a POSITA would not be able to practice the claimed invention without undue experimentation. *Alcon Research Ltd. v. Barr Labs., Inc.*, 745 F.3d 1180, 1188 (Fed. Cir. 2014).

To establish invalidity based on indefiniteness, Respondents must establish by clear and convincing evidence that the patents' claims, "viewed in light of the specification and prosecution

[34] Regardless of the priority date of the Asserted Patents or their AIA status, Serendia's contentions remain the same, e.g., the Asserted Claims are not invalid under 35 U.S.C. § 112.

[redacted]

history [fail to] inform those skilled in the art about the scope of the invention with reasonable certainty." *Nautilus, Inc. v. Biosig Instruments, Inc.*, 572 U.S. 898, 910 (2014).

Despite bearing this burden, Respondents have not put forth a *prima facie* case of alleged invalidity of any claim of the Asserted Patents under 35 U.S.C. § 112.

A. The '836, '379, and '444 Patents

1. The '836, '379, and '444 Patents' Asserted Claims are Supported by Adequate Written Description

a. "plurality of electrodes" ('836 Patent, claims 1 and 14; '379 Patent, claim 1; '444 Patent, claim 1)

Respondents allege this term lacks written description support if Respondents' proposed construction of "plurality of non-insulated electrodes" is not adopted. According to Respondents, the specifications of the '836, '379, and '444 Patents indicate that the intended results in the at-issue claims required the use of non-insulated electrodes in a bipolar manner, disparage the use of insulated electrodes, and, if described as optional, limit embodiments of insulated electrodes to "monopole" electrode configurations. Jul. 10, 2023 Invalidity Contentions at 130-32. Not so.

The specifications of the '836, '379, and '444 Patents sufficiently convey to a POSITA that the patentee possessed the claimed inventions, including this claim term, at the time of the applications. For example, the specifications of the '836, '379, and '444 Patents make clear non-insulated electrodes or needles may be used in this invention. *See, e.g.*, '836 Patent at 3:42-45 ("In some treatment cases, an embodiment of the present invention may employ insulating needles in an area where it comes in contact with epidermis, but insulation is not required."), 3:53-55 ("Other embodiments may use insulated needles but may, decrease the effectiveness of treatments employing insulated needles."), 6:66-7:1 ("In an embodiment, energized needles may be completely electrically insulated, un-insulated, and only insulated near its tip"), 7:12-18 ("In embodiments where at least a portion of the needle is insulated, the segment or area of needle that is configured to

contact the dermis may not be insulated. In an embodiment, the entire needle to be energized may be insulated while generating a desired energy field about the needle in the dermis."); '379 Patent at 3:44-47, 3:56-58, 7:1-3, 7:15-21; '444 Patent at 3:51-54, 3:63-65, 7:14-16, 7:27-33.

Respondents cite to the '836 Patent prosecution history in an attempt to support their contentions, but nothing in that prosecution history forecloses use of insulated electrodes or needles, and in fact contemplates using them in the invention. In fact, the '836 Patent prosecution history makes clear that "insulated needles" are needed for the Na effect in "special cases." '836 Patent Prosecution History at 23 (¶ 32). When referring to non-insulated needles, the '836 Patent prosecution history notes only that "***[u]sually***, Na-Effect . . . use[s] non insulated needles." *Id,* at 23 (¶ 29) (emphasis added); *see also id.* at 28 (¶ 78) ("Insulation of needles is not necessary for Na-effect and Na-Plus effect to occur where the temperature is raised around the tip of needles in an oval shape in dermis, and minimally raised in epidermis, as shown in Figure 5, 7, 8 and 9."). Contrary to Respondents assertion, "needle insulation does not entirely prevent Na-Effect and Na-Plus effect to occur." *Id.* at 28 (¶ 79). And just because the example described for such situations is a monopolar configuration, that does not mean a bipolar configuration is excluded, especially as the document asserts monopolar and bipolar can produce the Na effect.

Moreover, the June 14, 2011 KR Application 10-2011-0057691 that the '836, '379, and '444 Patents claim priority to also provides support for insulated electrodes or needles and insulation not completely eliminating the Na effect. For example, June 14, 2011 KR Application 10-2011-0057691 states, "even if insulation is necessary, insulation should be avoided at least on the part corresponding to dermis section" and "insulation does not mean that the Na effect does not appear." SERENDIA-00027535 at SERENDIA-00027553 (¶ 55). The drawings and their explanations also provide support for using insulation in the needles. For example, KR Application 10-

2011-0057691 indicates that 700 in the figures refers to the "Insulation coating part" and 903 is the "View of an area being heated when using bipolar electrodes that have been insulation coated on the conventional needle except for the tip of the needle." *Id*. at SERENDIA-00027550.

Thus, a POSITA would understand from the disclosures of the '836, '379, and '444 Patents that the patentee possessed the claimed inventions, including this claim term, at the time of the applications.

b. "coagulation around each electrode rather than coagulating between the electrodes" ('836 Patent, claims 1, 14)

Respondents allege this term lacks written description support because the specification of the '836 Patent does not refer to, describe, or explain how to effect coagulation "around each electrode rather than coagulation between the electrodes" or adequately describe what "around each electrode" and "between the electrodes" means in the context of the claimed invention. Jul. 10, 2023 Invalidity Contentions at 133. Not so.

The specification of the '836 Patent sufficiently conveys to a POSITA that the patentee possessed the claimed invention, including this claim term, at the time of the application. The specification of the '836 Patent discloses that in one embodiment "the temperature may be raised and the heat may be concentrated at an area in dermis by the needle(s) to cause coagulation." '836 Patent at 3:21-24; *see also* SERENDIA-00027535 at SERENDIA-00027545-546 (¶ 29), SERENDIA-00027546 (¶ 32), SERENDIA-00027547-548 (¶ 38), SERENDIA-00027553 (¶ 54), SERENDIA-00027570 (Fig. 6). The specification of the '836 Patent goes on to say the heated area around the needle end tips may be oval or tear shaped as shown in Fig. 5 and the heat may not be concentrated between needles, but also may be concentrated around each needle. '836 Patent at 3:24-29; *see also* SERENDIA-00027535 at SERENDIA-00027545-546 (¶ 29), SERENDIA-00027546

(¶ 32), SERENDIA-00027547-548 (¶ 38), SERENDIA-00027553 (¶ 54), SERENDIA-00027570 (Fig. 6). Figure 5 of the '836 Patent showing heated areas around the needle tips is below.

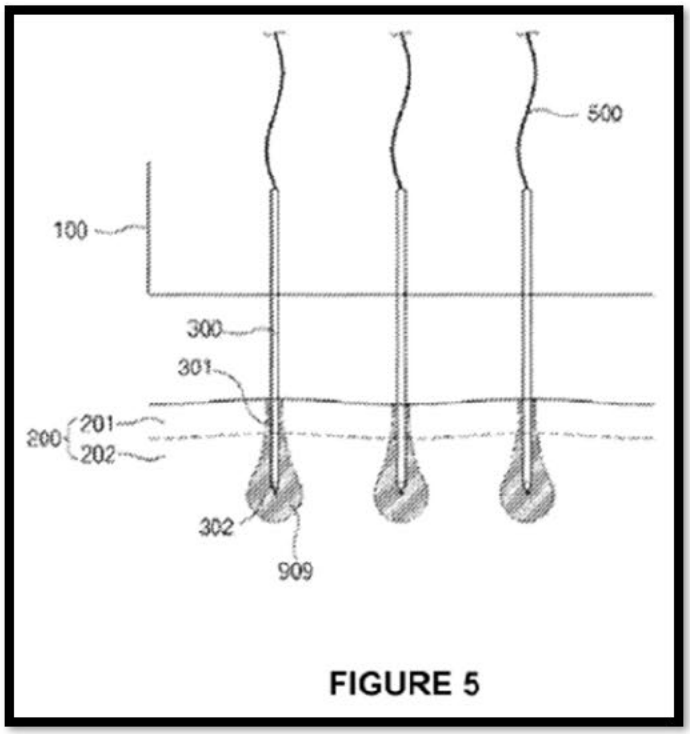

FIGURE 5

Thus, a POSITA would understand from the disclosure of the '836 Patent that the patentee possessed the claimed invention, including this claim term, at the time of the application.

c. "a radio frequency (RF) generation module … configured to provide an Alternating Current (AC) RF signal to the plurality of electrodes to cause coagulation around each electrode rather than coagulating between the electrodes" ('836 Patent, claim 1)

Respondents allege this term lacks written description support because there is no written description support for "coagulation around each electrode rather than coagulating between the electrodes," the claim element "configured to . . . cause coagulation" is unclear, the term "radio frequency (RF) generation module" is not used in the specification of the '836 Patent, and there is no description that the radio frequency generator provides "an Alternating (AC) RF signal" and how the signal "cause[s] coagulation." Jul 10, 2023 Invalidity Contentions at 133-34. Not so.

The specification of the ’836 Patent sufficiently conveys to a POSITA that the patentee possessed the claimed invention, including this claim term, at the time of the application. The specification of the ’836 Patent provides support for “coagulation around each electrode rather than coagulating between the electrodes” as described in Section VII.A.1.b. The specification of the ’836 Patent describes that the coagulation comes from the temperature increase and heat from the plurality of electrodes. *See, e.g.*, ’836 Patent at 3:21-29; *see also* SERENDIA-00027535 at SERENDIA-00027545-546 (¶ 29), SERENDIA-00027546 (¶ 32), SERENDIA-00027547-548 (¶ 38), SERENDIA-00027553 (¶ 54), SERENDIA-00027570 (Fig. 6).

The specification of the ’836 Patent discloses an “RF generator,” which a POSITA would understand to be a “radio frequency (RF) generation module.” *See, e.g.*, ’836 Patent at 5:29-35, 5:47-50, 5:53-57, 7:36-40, Fig. 2; *see also* SERENDIA-00027535 at SERENDIA-00027546 (¶ 32), SERENDIA-00027567 (Fig. 2). Also, the written description requirement does not demand the specification recites the claimed invention *in haec verba*. *Pozen Inc. v. Par Pharm., Inc.*, 696 F.3d 1151, 1167 (Fed. Cir. 2012); *Ariad Pharms., Inc. v. Eli Lilly & Co.*, 598 F.3d 1336, 1352 (Fed. Cir. 2010). So not including the exact claim terms in the specification is not dispositive as to whether there is written description support.

The specification of the ’836 Patent discloses the RF generator is configured to provide “an Alternating Current (AC) RF signal” and said signal “cause[s] coagulation.” *See, e.g.*, ’836 Patent at 3:21-24 (raising temperature and heat cause coagulation), 5:53-57 (“The RF generator 14 may generate signal or signal(s) having a desired voltage, current, energy, resistance, RF frequency, on cycle, off cycle, and other parameters according to various embodiments.”), 3:46-48 (“An embodiment of the present invention may employ bipolar needles, alternating current (AC) signals, and high frequency signals.”), 6:1-4 (“In an embodiment, alternating current (AC) is the

current that changes magnitude and direction periodically and may be a known waveform including a sine wave, triangular, or square wave."), 6:9-11 ("In an embodiment, actuating needles with AC may be a factor to generate a desired effect or energy field about the each needle."); 9:17-20 ("After developing the embodiments to form the desired energy field, it is possible to use a short load time in conjunction with a high frequency, low voltage, and alternating current signal."); *see also* SERENDIA-00027535 at SERENDIA-00027545-546 (¶ 29), SERENDIA-00027546 (¶ 32), SERENDIA-00027547-548 (¶ 38), SERENDIA-00027547 (¶ 35), SERENDIA-00027550-551 (¶ 44), SERENDIA-00027551 (¶ 45) ("Alternating current is recognized as the most important factor that generates the Na-Effect."), SERENDIA-00027553 (¶ 54), SERENDIA-00027553-554 (¶ 56), SERENDIA-00027562 (claim 3).

Thus, a POSITA would understand from the disclosure of the '836 Patent that the patentee possessed the claimed invention, including this claim term, at the time of the application.

d. "apply energy to body segments around each electrode rather than to body segments between the electrodes" ('379 Patent, claim 1)

Respondents allege this term lacks written description support because the written specification only refers to heat or raised temperature around each electrode rather than "energy." Jul. 10, 2023 Invalidity Contentions at 134. Not so.

The specification of the '379 Patent sufficiently conveys to a POSITA that the patentee possessed the claimed invention, including this claim term, at the time of the application. The written description requirement does not demand the specification recites the claimed invention *in haec verba*. *Pozen Inc. v. Par Pharm., Inc.*, 696 F.3d 1151, 1167 (Fed. Cir. 2012); *Ariad Pharms., Inc. v. Eli Lilly & Co.*, 598 F.3d 1336, 1352 (Fed. Cir. 2010). So not including the exact claim terms in the specification is not dispositive as to whether there is written description support.

The invention is focused on "medical treatment including skin treatment using electrical energy." '379 Patent at 1:26-30; *see also* SERENDIA-00027535 at SERENDIA-00027538 (¶ 1). The specification of the '379 Patent, for example, discloses that coagulation is caused by heat or raised temperature and the "heated areas" may be oval or tear shaped as shown in Fig. 5. '379 Patent at 3:22-31; *see also* SERENDIA-00027535 at SERENDIA-00027545-546 (¶ 29), SERENDIA-00027546 (¶ 32), SERENDIA-00027549-550 (¶ 41), SERENDIA-00027562 (claim 3), SERENDIA-0002770 (Fig. 6). Fig. 5 illustrates oval or tear shaped "energy field[s]," which correspond to the oval or tear shaped "heated areas" or "area[s] where the temperature is raised using non-insulated needles." '379 Patent at 3:22-31, 5:18-19, 5:36-43, 8:12-16; *see also* SERENDIA-00027535 at SERENDIA-00027545-546 (¶ 29), SERENDIA-00027546 (¶ 32), SERENDIA-00027549-550 (¶ 41), SERENDIA-00027562 (claim 3), SERENDIA-0002770 (Fig. 6). Additionally, a POSITA would understand that heat or raised temperature as described in the '379 Patent, *e.g.*, 3:22-31, is the result of energy applied the body segment.

Thus, a POSITA would understand from the disclosure of the '379 Patent that the patentee possessed the claimed invention, including this claim term, at the time of the application.

e. "a radio frequency (RF) generation module … configured to provide an RF signal with oscillating current to the plurality of electrodes to apply energy to body segments around each electrode rather than to body segments between the electrodes." ('379 Patent, claim 1)

Respondents allege this term lacks written description support because there is no written description support for "apply[ing] energy to body segments around each electrode rather than to body segments between the electrodes," the term "radio frequency (RF) generation module" is not used in the specification of the '379 Patent, and there is no description that the radio frequency generator provides an RF signal with oscillating current "to apply energy . . . around each electrode rather than . . . between the electrodes." Jul. 10, 2023 Invalidity Contentions at 134-35. Not so.

The specification of the ’379 Patent sufficiently conveys to a POSITA that the patentee possessed the claimed invention, including this claim term, at the time of the application. The specification of the ’379 Patent provides support for “apply[ing] energy to body segments around each electrode rather than to body segments between the electrodes” as described in Section VII.A.1.d.

The specification of the ’379 Patent discloses an “RF generator,” which a POSITA would understand to be a “radio frequency (RF) generation module.” *See, e.g.*, ’379 Patent at 5:30-36, 5:49-52, 5:55-59, 7:39-43, Fig. 2; *see also* SERENDIA-00027535 at SERENDIA-00027546 (¶ 32), SERENDIA-00027567 (Fig. 2). Also, the written description requirement does not demand the specification recites the claimed invention *in haec verba*. *Pozen*, 696 F.3d at 1167; *Ariad*, 598 F.3d at 1352. So not including the exact claim terms in the specification is not dispositive as to whether there is written description support.

The specification of the ’379 Patent discloses the RF generator is configured to provide “an RF signal with oscillating current,” which causes energy to be applied to “body segments around each electrode rather than to body segments between the electrodes.” *See, e.g.*, ’379 Patent at 3:23-26 (raising temperature and heat cause coagulation), 5:55-59 (“The RF generator 14 may generate signal or signal(s) having a desired voltage, current, energy, resistance, RF frequency, on cycle, off cycle, and other parameters according to various embodiments.”), 3:48-50 (“An embodiment of the present invention may employ bipolar needles, alternating current (AC) signals, and high frequency signals.”), 6:3-6 (“In an embodiment, alternating current (AC) is the current that changes magnitude and direction periodically and may be a known waveform including a sine wave, triangular, or square wave.”), 6:11-13 (“In an embodiment, actuating needles with AC may be a factor to generate a desired effect or energy field about the each needle.”); 9:17-20 (“After

developing the embodiments to form the desired energy field, it is possible to use a short load time in conjunction with a high frequency, low voltage, and alternating current signal."); *see also* SERENDIA-00027535 at SERENDIA-00027545-546 (¶ 29), SERENDIA-00027546 (¶ 32), SERENDIA-00027547-548 (¶ 38), SERENDIA-00027547 (¶ 35), SERENDIA-00027550-551 (¶ 44), SERENDIA-00027551 (¶ 45) ("Alternating current is recognized as the most important factor that generates the Na-Effect."), SERENDIA-00027553 (¶ 54), SERENDIA-00027553-554 (¶ 56), SERENDIA-00027562 (claim 3).

Thus, a POSITA would understand from the disclosure of the '379 Patent that the patentee possessed the claimed invention, including this claim term, at the time of the application.

f. "cause(s) energy to be substantially applied to body segments around each electrode" ('444 Patent, claim 1)

Respondents allege this term lacks written description support because there is no written description for "apply[ing] energy to body segments around each electrode" and the term "substantially" is not used in the specification of the '444 Patent. Jul. 10, 2023 Invalidity Contentions at 135-36. Not so.

The specification of the '444 Patent sufficiently conveys to a POSITA that the patentee possessed the claimed invention, including this claim term, at the time of the application. The written description requirement does not demand the specification recites the claimed invention *in haec verba*. *Pozen*, 696 F.3d at 1167; *Ariad*, 598 F.3d at 1352. So not including the exact claim terms in the specification is not dispositive as to whether there is written description support. Also, figures alone may provide adequate written description support. *Vas-Cath Inc. v. Mahurkar*, 935 F.2d 1555, 1564 (Fed. Cir. 1991).

The invention is focused on "medical treatment including skin treatment using electrical energy." '444 Patent at 1:34-37; *see also* SERENDIA-00027535 at SERENDIA-00027538 (¶ 1).

The specification of the ’444 Patent, for example, discloses that coagulation is caused by heat or raised temperature and the “heated areas” may be oval or tear shaped as shown in Fig. 5. ’444 Patent at 3:30-38; *see also* SERENDIA-00027535 at SERENDIA-00027545-546 (¶ 29), SERENDIA-00027546 (¶ 32), SERENDIA-00027549-550 (¶ 41), SERENDIA-00027562 (claim 3), SERENDIA-0002770 (Fig. 6). Fig. 5 includes oval or tear shaped “energy field[s],” which correspond to the oval or tear shaped “heated areas” or “area[s] where the temperature is raised using non-insulated needles.” ’444 Patent at 3:29-31, 5:31-31, 5:47-55, 8:20-22; *see also* SERENDIA-00027535 at SERENDIA-00027545-546 (¶ 29), SERENDIA-00027546 (¶ 32), SERENDIA-00027549-550 (¶ 41), SERENDIA-00027562 (claim 3), SERENDIA-0002770 (Fig. 6). Additionally, a POSITA would understand that heat or raised temperature as described in the ’444 Patent, *e.g.*, 3:30-38, is the result of energy applied to the body segment.

As to “substantially,” the specification of the ’444 Patent describes that “heat generated by the present invention may ***minimally*** affect the adject epidermis area.” ’444 Patent at 3:33-34 (emphasis added); *see also id.* at 3:36-37 (“In an embodiment heat may not be concentrated between needles.”); 3:37-38 (“In an embodiment, the heated area may be around each needle.”); 7:16-21 (“the energy field forms an oval or tear shape in adjacent dermis while the temperature is minimally raised in the epidermis”); SERENDIA-00027535 at SERENDIA-00027545-546 (¶ 29), SERENDIA-00027546 (¶ 32), SERENDIA-00027549-550 (¶ 41), SERENDIA-00027562 (claim 3), SERENDIA-0002770 (Fig. 6). This indicates that a small amount of the energy may impact areas other than the body segment around the electrode. Figure 5 of the ’444 Patent shows energy fields 909 mostly within the dermis, but some of it is in the epidermis. *See also* SERENDIA-00027535 at SERENDIA-00257570 (Fig. 6).

[redacted]

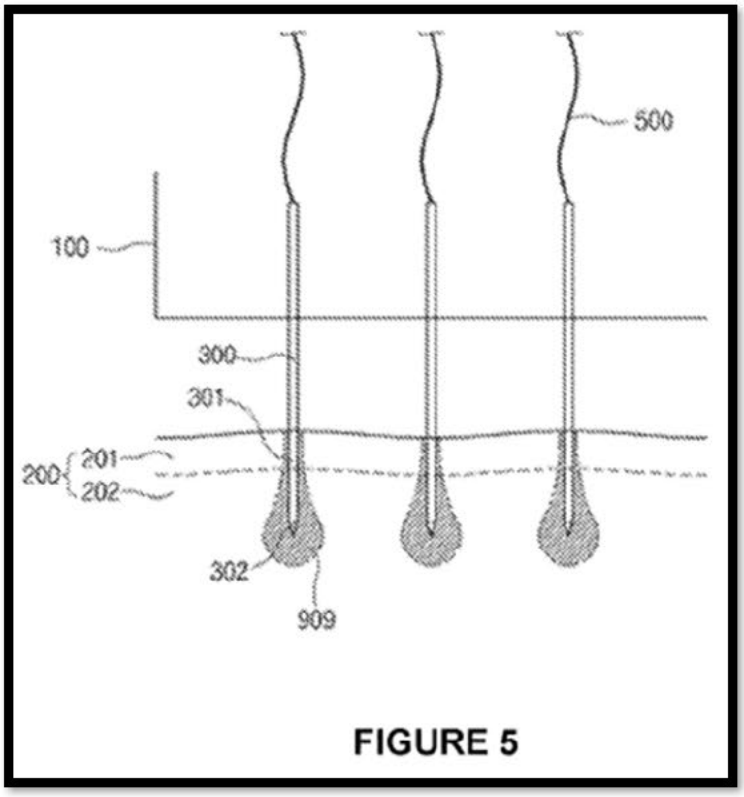

FIGURE 5

Thus, a POSITA would understand from the disclosure of the '444 Patent that the patentee possessed the claimed invention, including this claim term, at the time of the application.

g. "a radio frequency (RF) generation module, the RF generation module electrically coupled to the plurality of electrodes and configured to provide an RF signal with oscillating current to the plurality of electrodes to cause energy to be substantially applied to body segments around each electrode." ('444 Patent, claim 1)

Respondents allege this term lacks written description support because of the same reasons they contend there is no written description support for "a radio frequency (RF) generation module … configured to provide an RF signal with oscillating current to the plurality of electrodes" from claim 1 of the '379 Patent and there is no written description support for "causes energy to be substantially applied to body segments around each electrode." Jul. 10, 2023 Invalidity Contentions at 136-37. Not so.

The specification of the ’444 Patent sufficiently conveys to a POSITA that the patentee possessed the claimed invention, including this claim term, at the time of the application. As to the first argument, the specification of the ’444 Patent discloses an “RF generator,” which a POSITA would understand to be a “radio frequency (RF) generation module.” *See, e.g.*, ’444 Patent at 5:41-47, 5:60-63, 5:66-6:3, 7:50-54, Fig. 2; *see also* SERENDIA-00027535 at SERENDIA-00027546 (¶ 32), SERENDIA-00027567 (Fig. 2). Also, the written description requirement does not demand the specification recites the claimed invention *in haec verba*. *Pozen*, 696 F.3d at 1167; *Ariad*, 598 F.3d at 1352. So not including the exact claim terms in the specification is not dispositive as to whether there is written description support.

The specification of the ’444 Patent discloses the RF generator is configured to provide “an RF signal with oscillating current,” which causes energy to be applied to “body segments around each electrode.” *See, e.g.*, ’444 Patent at 3:30-33 (raising temperature and heat cause coagulation), 5:66-6:3 (“The RF generator 14 may generate signal or signal(s) having a desired voltage, current, energy, resistance, RF frequency, on cycle, off cycle, and other parameters according to various embodiments.”), 3:55-57 (“An embodiment of the present invention may employ bipolar needles, alternating current (AC) signals, and high frequency signals.”), 6:15-18 (“In an embodiment, alternating current (AC) is the current that changes magnitude and direction periodically and may be a known waveform including a sine wave, triangular, or square wave.”), 6:23-25 (“In an embodiment, actuating needles with AC may be a factor to generate a desired effect or energy field about the each needle.”); 9:29-32 (“After developing the embodiments to form the desired energy field, it is possible to use a short load time in conjunction with a high frequency, low voltage, and alternating current signal.”); *see also* SERENDIA-00027535 at SERENDIA-00027545-546 (¶ 29), SERENDIA-00027546 (¶ 32), SERENDIA-00027547-548 (¶ 38), SERENDIA-

00027547 (¶ 35), SERENDIA-00027550-551 (¶ 44), SERENDIA-00027551 (¶ 45) ("Alternating current is recognized as the most important factor that generates the Na-Effect."), SERENDIA-00027553 (¶ 54), SERENDIA-00027553-554 (¶ 56), SERENDIA-00027562 (claim 3).

As to the second argument, Respondents are incorrect as shown in Section VII.A.1.f.

Thus, a POSITA would understand from the disclosure of the '444 Patent that the patentee possessed the claimed invention, including this claim term, at the time of the application.

2. The '836, '379, and '444 Patents' Asserted Claims Do Not Require Undue Experimentation

Respondents allege the Asserted Claims of the '836, '379, and '444 Patents "directed to obtaining the so-called 'Na Effect'" are not enabled because the specifications of the '836, '379, and '444 Patents do not enable the full scope of obtaining such result or outcome. Jul. 10, 2023 Invalidity Contentions at 137-40. They are wrong.

Respondents' assertion starts from a faulty premise. None of the claims themselves claim a method or a device "directed to obtaining the so-called 'Na Effect.'" As explained in Section VIII., the claims are directed to new and useful methods of treating skin or a mammalian body and apparatus for carrying out the same. While the claims may utilize the Na Effect, that does not mean that they are directed to the Na Effect or that they are not enabled. The desire for a specific outcome and using a device or methods step to achieve a desired result is ubiquitous in virtually every patent claim. That does not make them directed to the desired result.

Regardless, Respondents fail to show the claims are not enabled. Respondents twist the specification of the '836, '379, and '444 Patents to supposedly require "tun[ing]" of at least six variables to obtain the desired energy fields around the needles. *Id.* at 118. However, Respondents ignore that the specification refers to those variables in connection with "an embodiment," not the entire invention. *See, e.g.*, '836 Patent at 10:1. Indeed, Respondents do not account for a POSA's

knowledge when reviewing the specification and claims of the ’836, ’379, and ’444 Patents, and contending that adjusting those variables and parameters would somehow result in undue experimentation.

Respondents last supporting argument is that there is no instruction on how to adjust parameters to achieve a desired result that is claimed. This position would upend the method of treatment patent space by rendering method claims invalid as not enabled. Many method of treatment patents require administering a pharmaceutically effective amount of a substance to treat a certain condition. To satisfy the enablement requirement in that field, a patentee is not required to provide all variables that may impact that amount and how they interact. A pharmaceutically effective amount may vary widely between people due to a variety of factors such as age, race, sex, height, weight, etc. Also, the pharmaceutically effective amount may vary for the same person due factors unique to the substance, such as when the person last ate or what they ate. Beyond the patient themselves, the pharmaceutically effective amount may depend on excipients or co-administered substances are present with the substance. Yet with all of this uncertainty, such method of treatment claims are not routinely held invalid. The same is true here.

a. “plurality of electrodes” (’836 Patent, claims 1, 14; ’379 Patent, claims 1, 10; ’444 Patent, claims 1, 10)

Here, a POSITA would be able to practice the claimed invention, including this claim term, without undue experimentation. Section VII.A.1.a. provides exemplary portions in the specification of the ’836, ’379, and ’444 Patents from which a POSITA may draw sufficient guidance to practice the claimed inventions. As explained in Section VII.A.1.a., Respondents’ interpretation of the ’836 Patent Prosecution History at pp. 19-35 is incorrect. And unlike in *AK Steel Corp. v. Sollac*, 344 F.3d 1234 (Fed. Cir. 2003) the case Respondents cite in their contentions, the specification of the Asserted Patents disclose both types of needles, *i.e.*, insulated and uninsulated, for

[redacted]

use in the claimed invention. *See, e.g.*, '836 Patent at 3:11-19, 3:42-45, 3:53-55, 6:66-7:7, 7:12-18, Figs. 5, 9B.

With respect to the *Wands* factors, each factor points to enablement, or is at least neutral:

- Factor 1 (The quantity of experimentation needed to make or use the invention based on the content of the disclosure): The quantity of experimentation needed to make or use the invention based on the content of the disclosure would not be high and Respondents point to nothing but conclusory statements to contend experimentation be high and "potentially impossible".

- Factor 2 (The amount of direction provided by the inventor): The Asserted Patents provide ample direction to achieve the claimed invention. *See, e.g.*, '836 Patent at 3:11-19, 3:42-45, 3:53-55, 6:66-7:7, 7:12-18, Figs. 5, 9B.

- Factor 3 (The existence of working examples): The Asserted Patents provide working examples. *See, e.g.*, '836 Patent at 3:11-19, 3:42-45, 3:53-55, 6:66-7:7, 7:12-18, Figs. 5, 9B.

- Factor 4 (The nature of the invention): The subject matter of the claimed invention pertains to devices and methods for treating skin or a mammalian body. Respondents seem to rely on the guidance provided in the specification with respect to this factor, and as noted regarding Factors 2 and 3, the Asserted Patents provide guidance to practice the invention.

- Factor 5 (The state of the prior art): The prior art provides meaningful guidance to a POSITA in the field of dermatological treatment.

- Factor 6 (The level of one of ordinary skill): The parties assert the level of POSITA is high, which supports enablement.

- Factor 7 (The level of predictability in the art): The field is more predictable than, e.g., that of pharmaceutical compound development. Respondents point to nothing but conclusory statements regarding this factor.

- Factor 8 (The breadth of the claims): The claims are focused on certain devices and methods for treating skin or a mammalian body.

Complainant notes that fact discovery is ongoing and expert discovery has not yet occurred, and reserves the right to rely on additional evidence developed an expert opinion to show a POSITA may draw sufficient guidance to practice the claimed invention with respect to the *Wands*

[redacted]

factors. Respondents will be unable to show lack of enablement by clear and convincing evidence. *See, e.g., Cephalon, Inc. v. Watson Pharms.*, 707 F.3d 1130, 1339-40 (Fed. Cir. 2013).

b. "coagulation around each electrode rather than coagulating between the electrodes" ('836 Patent, claims 1, 14)

Respondents allege this term is not enabled "[f]or the same reasons discussed for lack of written description." Jul 10, 2023 Invalidity Contentions at 144-46. Not so. Respondents provide no explanation for this assertion other than that the quantity of experimentation would be "extremely high, and potentially impossible" based on the '836 Patent Prosecution History allegedly disclosing that insulated needles can prevent the Na effect to take place. *Id.* at 123.

Here, a POSITA would be able to practice the claimed invention, including this claim term, without undue experimentation. Section VII.A.1.b provides exemplary portions in the specification of the '836 Patent from which a POSITA may draw sufficient guidance to practice the claimed invention. As explained in Section VII.A.1.b, Respondents interpretation of the '836 Patent Prosecution History at pp. 19-35 is incorrect.

With respect to the *Wands* factors, each factor points to enablement, or at least neutral:

- Factor 1 (The quantity of experimentation needed to make or use the invention based on the content of the disclosure): The quantity of experimentation needed to make or use the invention based on the content of the disclosure would not be high and Respondents point to nothing but conclusory statements to contend experimentation be high and "potentially impossible".

- Factor 2 (The amount of direction provided by the inventor): The Asserted Patents provide ample direction to achieve the claimed invention. *See, e.g.*, '836 Patent at 3:42-45, 3:53-55, 6:66-7:1, 7:12-18, Figs. 5, 9B.

- Factor 3 (The existence of working examples): The Asserted Patents provide working examples. *See, e.g.*, '836 Patent at 3:11-19, 3:42-45, 3:53-55, 6:66-7:17, 7:12-18, Figs. 5, 9B.

- Factor 4 (The nature of the invention): The subject matter of the claimed invention pertains to devices and methods for treating skin or a mammalian body.

- Factor 5 (The state of the prior art): The prior art provides meaningful guidance to a POSITA in the field of dermatological treatment.

- Factor 6 (The level of one of ordinary skill): The parties assert the level of POSITA is high, which supports enablement.

- Factor 7 (The level of predictability in the art): The field is more predictable than, e.g., that of pharmaceutical compound development. Respondents point to nothing but conclusory statements regarding this factor.

- Factor 8 (The breadth of the claims): The claims are focused on certain devices and methods for treating skin or a mammalian body.

Dr. Na's publication in *Nature* is also indicative of enablement. Complainant notes that fact discovery is ongoing and expert discovery has not yet occurred, and reserves the right to rely on adiditonal evidence developed an expert opinion to show a POSITA may draw sufficient guidance to practice the claimed invention with respect to the *Wands* factors. Respondents will be unable to show lack of enablement by clear and convincing evidence. *See, e.g., Cephalon, Inc. v. Watson Pharms.*, 707 F.3d 1130, 1339-40 (Fed. Cir. 2013).

c. "a radio frequency (RF) generation module … configured to provide an Alternating Current (AC) RF signal to the plurality of electrodes to cause coagulation around each electrode rather than coagulating between the electrodes" ('836 Patent, claim 1)

Respondents allege this term is not enabled "[f]or the same reasons discussed for lack of written description." Jul. 10, 2023 Invalidity Contentions at 146-48. Not so. Respondents provide no explanation for this assertion other than that the quantity of experimentation would be "extremely high, and potentially impossible" based on the '836 Patent Prosecution History allegedly disclosing insulated needles can prevent the Na effect to take place. *Id.* at 123-24.

Here, a POSITA would be able to practice the claimed invention, including this claim term, without undue experimentation. Section VII.A.1.c provides exemplary portions in the specification of the '836 Patent from which a POSITA may draw sufficient guidance to practice the claimed

[redacted]

invention. As explained in Section VII.A.1.c, Respondents interpretation of the '836 Patent Prosecution History at pp. 19-35 is incorrect.

With respect to the *Wands* factors, each factor points to enablement, or at least neutral:

- Factor 1 (The quantity of experimentation needed to make or use the invention based on the content of the disclosure): The quantity of experimentation needed to make or use the invention based on the content of the disclosure would not be high and Respondents point to nothing but conclusory statements to contend experimentation be high and "potentially impossible".

- Factor 2 (The amount of direction provided by the inventor): The Asserted Patents provide ample direction to achieve the claimed invention. *See, e.g.*, '836 Patent 3:21-29, 3:46-48, 5:29-35, 5:47-50, 5:53-57, 6:1-4, 6:9-11, 9:17-20, 7:36-40, Fig. 2.

- Factor 3 (The existence of working examples): The Asserted Patents provide working examples. *See, e.g.*, '836 Patent at 3:11-19, 3:21-29, 3:46-48, 5:29-35, 5:47-50, 5:53-57, 6:1-4, 6:9-11, 9:17-20, 7:36-40, Fig. 2.

- Factor 4 (The nature of the invention): The subject matter of the claimed invention pertains to devices and methods for treating skin or a mammalian body.

- Factor 5 (The state of the prior art): The prior art provides meaningful guidance to a POSITA in the field of dermatological treatment.

- Factor 6 (The level of one of ordinary skill): The parties assert the level of POSITA is high, which supports enablement.

- Factor 7 (The level of predictability in the art): The field is more predictable than, e.g., that of pharmaceutical compound development. Respondents point to nothing but conclusory statements regarding this factor.

- Factor 8 (The breadth of the claims): The claims are focused on certain devices and methods for treating skin or a mammalian body.

Dr. Na's publication in *Nature* is also indicative of enablement. Complainant notes that fact discovery is ongoing and expert discovery has not yet occurred, and reserves the right to rely on adiditonal evidence developed an expert opinion to show a POSITA may draw sufficient guidance to practice the claimed invention with respect to the *Wands* factors. Respondents will be

unable to show lack of enablement by clear and convincing evidence. *See, e.g., Cephalon, Inc. v. Watson Pharms.*, 707 F.3d 1130, 1339-40 (Fed. Cir. 2013).

d. "apply energy to body segments around each electrode rather than to body segments between the electrodes" ('379 Patent, claims 1 and 10)

Respondents allege this term is not enabled "[f]or the same reasons discussed for lack of written description." Jul. 10, 2023 Invalidity Contentions at 148-50. Not so. Respondents provide no explanation for this assertion other than that the quantity of experimentation would be "extremely high, and potentially impossible" based on the '836 Patent Prosecution History allegedly disclosing that insulated needles can prevent the Na effect to take place. *Id.* at 125.

Here, a POSITA would be able to practice the claimed invention, including this claim term, without undue experimentation. Section VII.A.1.d provides exemplary portions in the specification of the '379 Patent from which a POSITA may draw sufficient guidance to practice the claimed invention. As explained in Section VII.A.1.a, Respondents interpretation of the '836 Patent Prosecution History at pp. 19-35 is incorrect.

With respect to the *Wands* factors, each factor points to enablement, or at least neutral:

- Factor 1 (The quantity of experimentation needed to make or use the invention based on the content of the disclosure): The quantity of experimentation needed to make or use the invention based on the content of the disclosure would not be high.
- Factor 2 (The amount of direction provided by the inventor): The Asserted Patents provide ample direction to achieve the claimed invention. *See, e.g.*, '379 Patent at 3:44-47, 3:56-58, 7:1-3, 7:15-21, Figs. 5, 9B.
- Factor 3 (The existence of working examples): The Asserted Patents provide working examples. *See, e.g.*, '379 Patent at 3:11-19, 3:44-47, 3:56-58, 7:1-3, 7:15-21, Figs. 5, 9B.
- Factor 4 (The nature of the invention): The subject matter of the claimed invention pertains to devices and methods for treating skin or a mammalian body.
- Factor 5 (The state of the prior art): The prior art provides meaningful guidance to a POSITA in the field of dermatological treatment.

- Factor 6 (The level of one of ordinary skill): The parties assert the level of POSITA is high, which supports enablement.

- Factor 7 (The level of predictability in the art): The field is more predictable than, e.g., that of pharmaceutical compound development. Respondents point to nothing but conclusory statements regarding this factor.

- Factor 8 (The breadth of the claims): The claims are focused on certain devices and methods for treating skin or a mammalian body.

Dr. Na's publication in *Nature* is also indicative of enablement. Complainant notes that fact discovery is ongoing and expert discovery has not yet occurred, and reserves the right to rely on adiditonal evidence developed an expert opinion to show a POSITA may draw sufficient guidance to practice the claimed invention with respect to the *Wands* factors. Respondents will be unable to show lack of enablement by clear and convincing evidence. *See, e.g., Cephalon, Inc. v. Watson Pharms.*, 707 F.3d 1130, 1339-40 (Fed. Cir. 2013).

e. "a radio frequency (RF) generation module … configured to provide an RF signal with oscillating current to the plurality of electrodes to apply energy to body segments around each electrode rather than to body segments between the electrodes." ('379 Patent, claim 1)

Respondents allege this term is not enabled "[f]or the same reasons discussed for lack of written description." Jul 10, 2023 Invalidity Contentions at 150-52. Not so. Respondents provide no explanation for this assertion. *Id.* at 125-26.

Here, a POSITA would be able to practice the claimed invention, including this claim term, without undue experimentation. Section VII.A.1.e provides exemplary portions in the specification of the '379 Patent from which a POSITA may draw sufficient guidance to practice the claimed invention.

With respect to the *Wands* factors, each factor points to enablement, or at least neutral:

- Factor 1 (The quantity of experimentation needed to make or use the invention based on the content of the disclosure): The quantity of experimentation needed to make or use the invention based on the content of the disclosure would not be high

and Respondents point to nothing but conclusory statements to contend experimentation be high and "potentially impossible".

- Factor 2 (The amount of direction provided by the inventor): The Asserted Patents provide ample direction to achieve the claimed invention. *See, e.g.*, '379 Patent at 3:23-26, 3:48-50, 5:30-36, 5:49-52, 5:55-59, 6:3-6, 6:11-13, 7:39-43, 9:17-20, Fig. 2.

- Factor 3 (The existence of working examples): The Asserted Patents provide working examples. *See, e.g.*, '379 Patent at 3:11-19, 3:23-26, 3:48-50, 5:30-36, 5:49-52, 5:55-59, 6:3-6, 6:11-13, 7:39-43, 9:17-20, Fig. 2.

- Factor 4 (The nature of the invention): The subject matter of the claimed invention pertains to devices and methods for treating skin or a mammalian body.

- Factor 5 (The state of the prior art): The prior art provides meaningful guidance to a POSITA in the field of dermatological treatment.

- Factor 6 (The level of one of ordinary skill): The parties assert the level of POSITA is high, which supports enablement.

- Factor 7 (The level of predictability in the art): The field is more predictable than, e.g., that of pharmaceutical compound development. Respondents point to nothing but conclusory statements regarding this factor.

- Factor 8 (The breadth of the claims): The claims are focused on certain devices and methods for treating skin or a mammalian body.

Dr. Na's publication in *Nature* is also indicative of enablement. Complainant notes that fact discovery is ongoing and expert discovery has not yet occurred, and reserves the right to rely on adiditonal evidence developed an expert opinion to show a POSITA may draw sufficient guidance to practice the claimed invention with respect to the *Wands* factors. Respondents will be unable to show lack of enablement by clear and convincing evidence. *See, e.g., Cephalon, Inc. v. Watson Pharms.*, 707 F.3d 1130, 1339-40 (Fed. Cir. 2013).

f. "cause(s) energy to be substantially applied to body segments around each electrode" ('444 Patent, claims 1, 10)

Respondents allege this term is not enabled "[f]or the same reasons discussed for lack of written description." Jul. 10, 2023 Invalidity Contentions at 152-54. Not so. Respondents provide

no explanation for this assertion other than that the quantity of experimentation would be "extremely high, and potentially impossible" based on the '836 Patent Prosecution History allegedly disclosing that insulated needles can prevent the Na effect to take place. *Id.* at 126-27.

Here, a POSITA would be able to practice the claimed invention, including this claim term, without undue experimentation. Section VII.A.1.f provides exemplary portions in the specification of the '444 Patent from which a POSITA may draw sufficient guidance to practice the claimed invention. As explained in Section VII.A.1.a, Respondents interpretation of the '836 Patent Prosecution History at pp. 19-35 is incorrect.

With respect to the *Wands* factors, each factor points to enablement, or at least neutral:

- Factor 1 (The quantity of experimentation needed to make or use the invention based on the content of the disclosure): The quantity of experimentation needed to make or use the invention based on the content of the disclosure would not be high and Respondents point to nothing but conclusory statements to contend experimentation be high and "potentially impossible".

- Factor 2 (The amount of direction provided by the inventor): The Asserted Patents provide ample direction to achieve the claimed invention. *See, e.g.*, '444 Patent at 1:34-3, 3:30-38, 5:31-31, 5:47-55, 7:16-21, 8:20-22, Fig. 5.

- Factor 3 (The existence of working examples): The Asserted Patents provide working examples. *See, e.g.*, '444 Patent at 1:34-3, 3:11-19, 3:30-38, 5:31-31, 5:47-55, 7:16-21, 8:20-22, Fig. 5.

- Factor 4 (The nature of the invention): The subject matter of the claimed invention pertains to devices and methods for treating skin or a mammalian body.

- Factor 5 (The state of the prior art): The prior art provides meaningful guidance to a POSITA in the field of dermatological treatment.

- Factor 6 (The level of one of ordinary skill): The parties assert the level of POSITA is high, which supports enablement.

- Factor 7 (The level of predictability in the art): The field is more predictable than, e.g., that of pharmaceutical compound development. Respondents point to nothing but conclusory statements regarding this factor.

- Factor 8 (The breadth of the claims): The claims are focused on certain devices and methods for treating skin or a mammalian body.

Dr. Na's publication in *Nature* is also indicative of enablement. Complainant notes that fact discovery is ongoing and expert discovery has not yet occurred, and reserves the right to rely on adiditonal evidence developed an expert opinion to show a POSITA may draw sufficient guidance to practice the claimed invention with respect to the *Wands* factors. Respondents will be unable to show lack of enablement by clear and convincing evidence. *See, e.g., Cephalon, Inc. v. Watson Pharms.*, 707 F.3d 1130, 1339-40 (Fed. Cir. 2013).

g. "a radio frequency (RF) generation module, the RF generation module electrically coupled to the plurality of electrodes and configured to provide an RF signal with oscillating current to the plurality of electrodes to cause energy to be substantially applied to body segments around each electrode." ('444 Patent, claim 1)

Respondents allege this term is not enabled "[f]or the same reasons discussed for lack of written description." Jul. 10, 2023 Invalidity Contentions at 154-57. Not so. Respondents provide no explanation for this assertion. *Id.* at 127-28.

Here, a POSITA would be able to practice the claimed invention, including this claim term, without undue experimentation. Section VII.A.1.g provides exemplary portions in the specification of the '444 Patent from which a POSITA may draw sufficient guidance to practice the claimed invention.

With respect to the *Wands* factors, each factor points to enablement, or at least neutral:

- Factor 1 (The quantity of experimentation needed to make or use the invention based on the content of the disclosure): The quantity of experimentation needed to make or use the invention based on the content of the disclosure would not be high and Respondents point to nothing but conclusory statements to contend experimentation be high and "potentially impossible".

- Factor 2 (The amount of direction provided by the inventor): The Asserted Patents provide ample direction to achieve the claimed invention. *See, e.g.*, '444 Patent at 3:20-33, 3:55-57, 4:6-10, 5:41-47, 5:60-63, 5:66-6:3, 6:15-18, 6:23-25, 7:50-54, 9:29-32, Fig. 2.

- Factor 3 (The existence of working examples): The Asserted Patents provide working examples. *See, e.g.*, '444 Patent at 3:11-19, 3:20-33, 3:55-57, 5:41-47, 5:60-63, 5:66-6:3, 6:15-18, 6:23-25, 7:50-54, 9:29-32, Fig. 2.

- Factor 4 (The nature of the invention): The subject matter of the claimed invention pertains to devices and methods for treating skin or a mammalian body.

- Factor 5 (The state of the prior art): The prior art provides meaningful guidance to a POSITA in the field of dermatological treatment.

- Factor 6 (The level of one of ordinary skill): The parties assert the level of POSITA is high, which supports enablement.

- Factor 7 (The level of predictability in the art): The field is more predictable than, e.g., that of pharmaceutical compound development. Respondents point to nothing but conclusory statements regarding this factor.

- Factor 8 (The breadth of the claims): The claims are focused on certain devices and methods for treating skin or a mammalian body.

Dr. Na's publication in *Nature* is also indicative of enablement. Complainant notes that fact discovery is ongoing and expert discovery has not yet occurred, and reserves the right to rely on adiditonal evidence developed an expert opinion to show a POSITA may draw sufficient guidance to practice the claimed invention with respect to the *Wands* factors. Respondents will be unable to show lack of enablement by clear and convincing evidence. *See, e.g., Cephalon, Inc. v. Watson Pharms.*, 707 F.3d 1130, 1339-40 (Fed. Cir. 2013).

3. The '836, '379, and '444 Patents' Asserted Claims are Definite

a. "cause[s] energy to be substantially applied to body segments around each electrode" ('444 Patent, claim 1)

Respondents allege "substantially applied" renders this term is indefinite because it allows for energy from electrodes to overlap, contrary to Serendia's position in the IPR for the '379 Patent and Examiner's view that the claims of the '444 Patent did not allow for overlap. Jul. 10, 2023 Invalidity Contentions at 158-61. Not so.

The specification of the ’444 Patent and knowledge of a POSITA inform a POSITA with reasonable certainty of the meaning and scope of this term. Serendia has previously explained how a POSITA would understand “substantially applied” in light of the specification of the ’444 Patent. Section VII.A.1.f. Even so, Respondents’ entire argument is based on a claim construction that “substantially applied” means that there is overlap of energy fields from each electrode. But such a construction is not supported by the specification or prosecution history of the ’444 Patent. A POSITA would understand that energy may dissipate from the RF generation module to the tips of the needle or be applied to other areas of the skin or the mammalian body treatment apparatus.

Furthermore, using the word “substantially” does not automatically render a claim indefinite as a POSITA can view the term in the context of the specification of the ’444 Patent and his/her own knowledge. *See Exmark Mfg. Co. Inc. v. Briggs & Stratton Power Prod. Grp., LLC*, 879 F.3d 1332, 1346 (Fed. Cir. 2018) (explaining that “substantially” does not render a claim term indefinite because “no such numerical precision is required when using such terms of degree.”).

Thus, this term is well understood and the specification of the ’444 Patent and knowledge of a POSITA inform a POSITA with reasonable certainty about the meaning and scope of this term. To the extent necessary, fact and expert discovery is expected to show as much.

* * *

Respondents thus fall well short of its burden of proving invalidity by clear and convincing evidence. *Tech. Licensing Corp. v. Videotek, Inc.*, 545 F.3d 1316, 1327 (Fed. Cir. 2008) (“When an alleged infringer attacks the validity of an issued patent, our well-established law places the burden of persuasion on the attacker to prove invalidity by clear and convincing evidence.”).

[redacted]

B. The ’536, ’774, and ’812 Patents

1. The ’536, ’774, and ’812 Patents’ Asserted Claims are Supported by Adequate Written Description

a. “pulsed radio frequency signals” (’774 Patent, “All claims”)[35]

Respondents allege that this term, as Serendia construes it, lacks written description support because the specification of the ’774 Patent does not describe or suggest that the “off” state can be anything other than zero or applying radio frequency signals in pulses and only describes square wave pulses,. Jul. 10, 2023 Invalidity Contentions at 163-66. Not so.

The claims require the signal generator to produce pulsed radio frequency signals across a plurality of extended needles. And, the specification of the ’774 Patent sufficiently conveys to a POSITA that the patentee possessed the claimed invention, including this claim term as Serendia construes it, at the time of the application. Contrary to Respondents position, the ’774 Patent discloses a variety of radiofrequency pulses—not only square waves—that can (but need not) have a non-zero amplitude before being pulsed.

For example, the specification of the ’774 Patent discloses a radio frequency signal generator 911A may generate one or more electrical signals to be applied to one or more needles 924A based on the selected operational parameters, such coagulation, which utilizes RF. ’774 Patent at 10:20-23, 10:39-48; *see also* U.S. Prov. App. No. 61/449,080 at ¶¶ 69. The specification of the ’774 Patent describes the radio frequency signal generator 911A may apply electrical signals

[35] Respondents assert “All claims” of the ’774 Patent are implicated, but Serendia only assert a subset of those claims (claims 13, 14) and only claim 11 upon which those claims depend explicitly include “pulsed radio frequency signals.” To be consistent with the nomenclature for the rest of Respondents’ final invalidity contentions regarding § 112, “All claims” should be considered “claim 11.”

[redacted]

shown in Figures 5A, 5B, and 6, a combination thereof, or other signals. '774 Patent at 10:48-50; *see also* U.S. Prov. App. No. 61/449,080 at ¶¶ 69.

The '774 Patent discloses that, in "various embodiments," the "signal waveform . . . includes square-wave pulses," shown in Figures 5A (copied below) and 5B. '774 Pat. at 6:12-18. The specification also discloses "pulses" having the shape shown in Figure 6, copied below. '774 Pat. at 6:59-61.

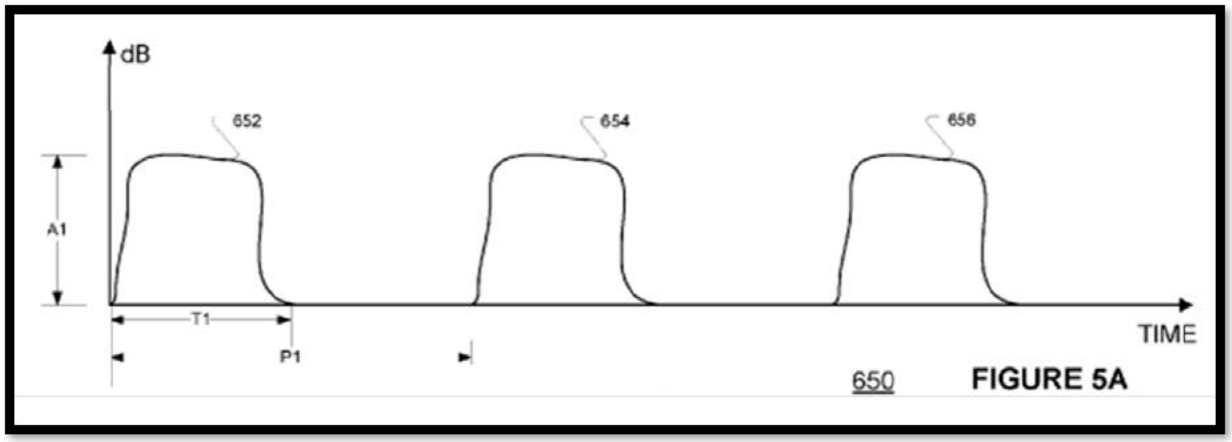

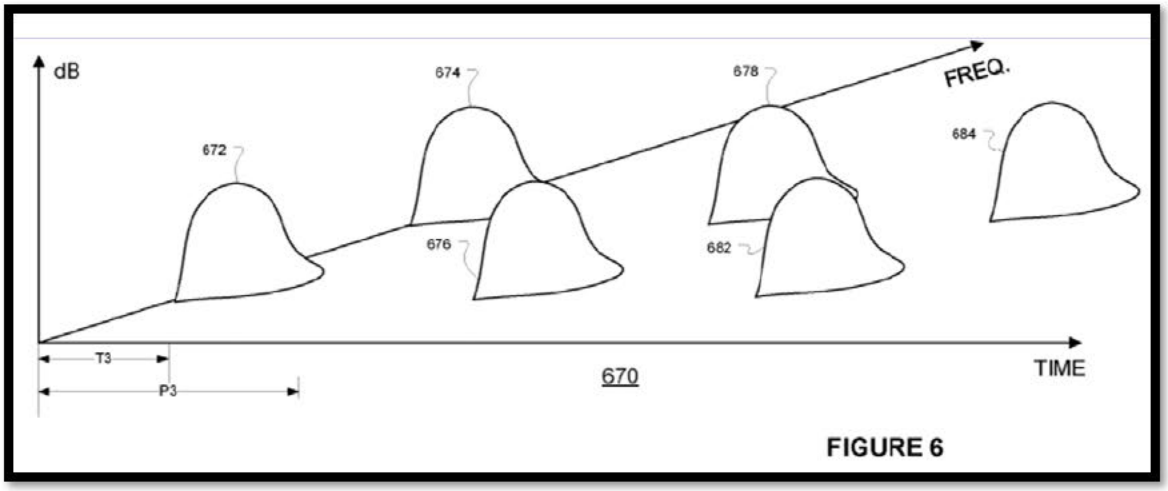

Assuming Figures 5A and 5B are limited square-wave pulses, even those figures do not show and are not limited to pulsed radio frequency signals that have a "constant amplitude" (i.e., a horizontal

line for the top of the pulses). Further, in Figure 6, the amplitude of the pulses varies over the entire pulse.

There is no mention anywhere in the '774 Patent of pulses having zero amplitude. Even in the Figures 5A, 5B, or 6, simply because the signal start at the X-axis, nothing indicates that such a start indicates a start at zero for a pulse. Extrinsic evidence confirms that the plain and ordinary meaning of "pulse" does not require that a pulse start from zero amplitude but rather recognizes that there can be pulses from a constant or steady starting point. *See, e.g.*, CXM-0010 (Excerpt of Wiley Electrical and Electronics Engineering Dictionary (2004)) at CXM-0010.5 ("steady value"); CXM-0008 (Excerpt of Modern Dictionary of Electronics (7th ed. 1999)) at CXM-0008.7 ("value [that] is normally constant").

Respondents argue that Complainant asserted in its initial validity contentions that Figures 5A, 5B, and 6 do not disclose pulsed radio frequency signals because Complainant distinguished the same figures in Na '848. Jul. 10, 2023 Invalidity Contentions at 165-66. Respondents' argument is misplaced. The disclosure in Na '848 does not indicate the pulses in Fig. 5A, 5B, and 6 of it are related to pulsed radiofrequency. *See, e.g.*, Na '848 at ¶¶ 26-29, 33, 39-44, Figs. 5A, 5B, and 6. The words "radio frequency" or "RF" are not present in Na '848. Even if Figs. 5A, 5B, and 6 in the Asserted Patents and in Na '848 look the same, the description of what those figures mean in the context of the invention is what governs the disclosure. Respondents entirely ignore such disclosures.

Thus, a POSITA would understand from the disclosure of the '774 Patent that the patentee possessed the claimed invention, including this claim term, at the time of the application.

b. "the releasably couplable deployable needle assembly, the deployable needle assembly mechanically separatably from the proximal end" ('536 Patent, claims 1, 11)

Respondents appear to challenge this term on three fronts. First, Respondents contend that "mechanically separatably" does not appear anywhere in the '536 Patent and that the word "separatable" is an error that cannot be fixed by the ITC. Second, Respondents that the '536 Patent does not include support for a needle assembly itself being "releasably couplable deployable." Jul. 10, 2023 Invalidity Contentions at 166-67. All attacks are incorrect.

As to the first issue, the written description requirement does not demand that the specification recite the claimed invention *in haec verba*. *Pozen*, 696 F.3d at 1167; *Ariad*, 598 F.3d at 1352. Further, it is well established that courts may correct "obvious minor typographical and clerical errors in patents." *Pavo Solutions LLC v. Kingston Tech. Co., Inc.*, 35 F.4th 1367, 1373 (Fed. Cir. 2022) (citing *Novo Indus., L.P. v. Micro Molds Corp.*, 350 F.3d 1348, 1357 (Fed. Cir. 2003)). The ITC may interpret claim terms with minor drafting errors without holding them invalid under § 112. *See, e.g.*, *Certain Multiple Mode Outdoor Grills*, Inv. No. 337-TA-895, Comm'n Op. at 23-26 (doing so for definiteness). The ITC also has the power to construe the patent claims and certain Respondents conceded before the PTAB that, "as it would be understood by a POSA," "mechanically separatably" means "mechanically separable." *Cartessa Aesthetics, LLC v. Serendia, LLC*, IPR2022-00378, Paper 1 at 18 (PTAB Dec. 28, 2021).

Here, the drafting error of "separatably" is minor and apparent on the face of the '536 Patent and the specification of the '536 Patent sufficiently conveys to a POSITA that the patentee possessed the claimed invention, including this claim term, at the time of the application—regardless of whether "separatably" is corrected to or construed as "separable" or "separatable."

As to the second issue, the specification of the '536 Patent sufficiently conveys to a POSITA that the patentee possessed the claimed invention, including a "releasable couplable deployable needle assembly," at the time of the application. For example, the '536 Patent describes

[redacted]

that the needle assembly 924F of deployable needle module 924 includes drive shaft coupling arms 924D that engage and disengage, in other words attach or couple, with recesses 922G of motor and LED module 922 of handle module 920. '536 Patent at 11:35-12:23; *see also* U.S. Prov. App. No. 61/449,080 at ¶¶ 64, 69, 71-74, 80-81, 85, Figs. 9C, 9D, 10A-E, cl. 1. The specification of the '536 Patent also describes phases of engagement, attachment, or coupling in Figures 10A-D and the associated portions of the written specification. '536 Patent at 11:35-12:23; *see also* U.S. Prov. App. No. 61/449,080 at ¶¶ 64, 69, 71-74, 80-81, 85, Figs. 9C, 9D, cl. 1.

As seen below, Figures 10A-D of the '536 Patent (and U.S. Prov. App. No. 61/449,080) show certain stages of engagement, attachment, or coupling between the needle assembly 924F and motor and LED module 922, including when the needle assembly 924F is separate from motor and LED module 922 (Figures 10A-C):

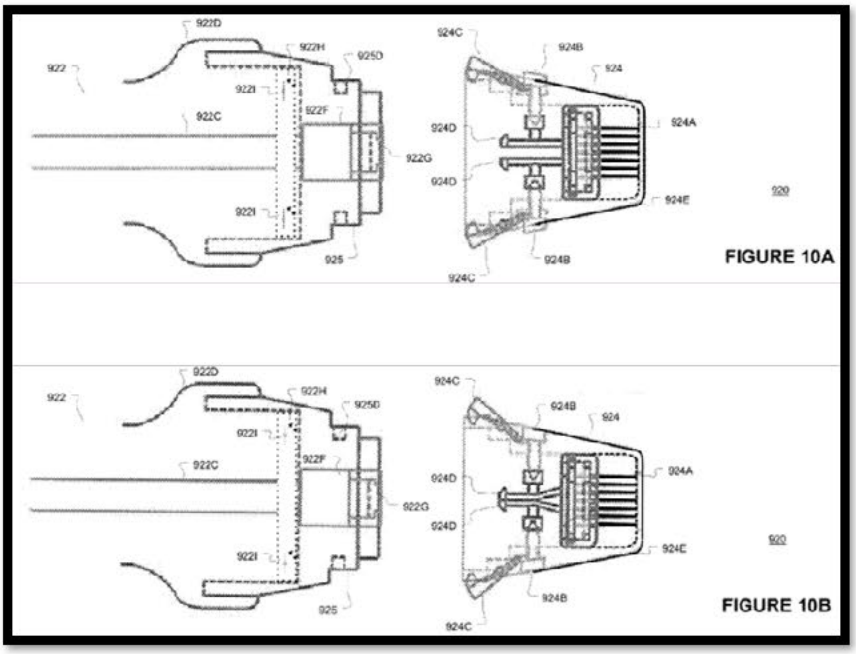

[redacted]

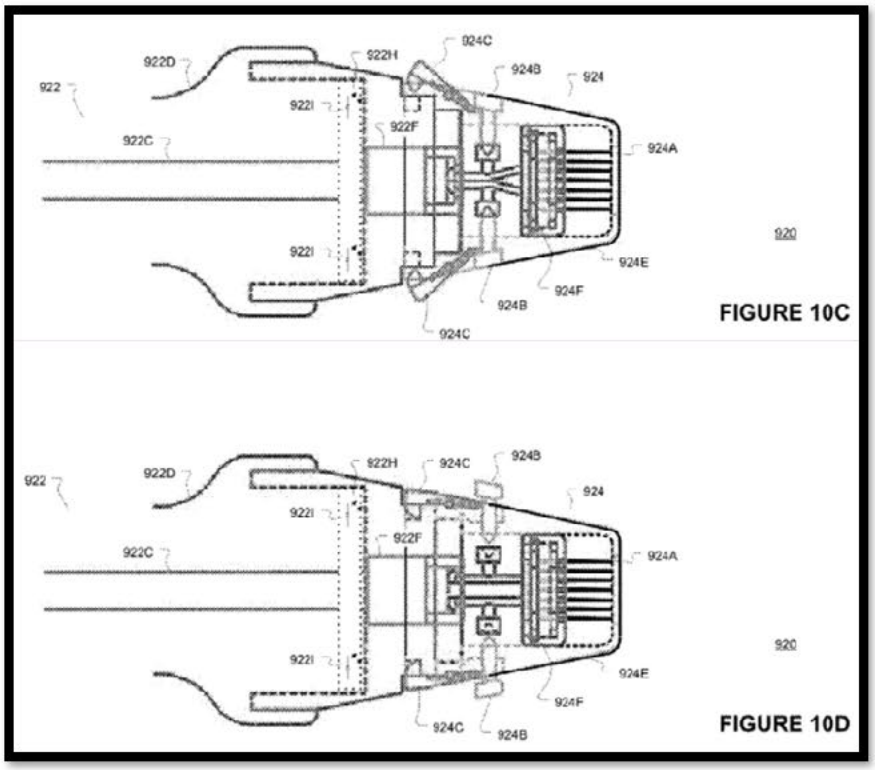

The specification of the '536 Patent shows the engagement, attachment, or coupling between the needle assembly 924F and motor and LED module 922 in Figures 9C and 9D and the associated portions of the written specification. '536 Patent at 10:42-11:34; *see also* U.S. Prov. App. No. 61/449,080 at ¶¶ 64, 69, 71-74, 80-81, 85, Figs. 9C, 9D, cl. 1.

As seen below, Figures 9C and 9D of the '536 Patent (and U.S. Prov. App. No. 61/449,080) show engagement, attachment, or coupling between the needle assembly 924F and motor and LED module 922:

[redacted]

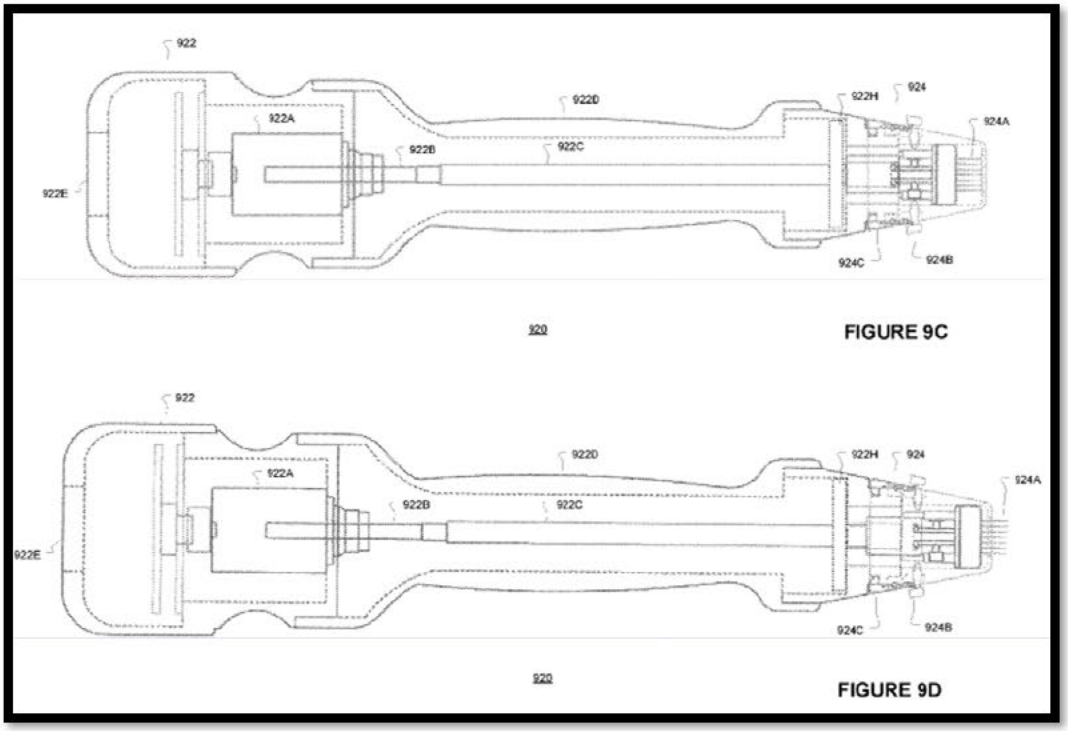

The specification of the '536 Patent describes that: "In a further embodiment the DLM 924 may be a detachable cartridge module (DCM) 924 where the DCM may be changed between therapy application(s) or client(s). In a further embodiment, the DCM 924 may be disposed after usage or cleaned via an autoclave or chemical process." '536 Patent at 10:52-56; *see also* U.S. Prov. App. No. 61/449,080 at ¶ 71. Thus, the specification and drawings of the '536 Patent sufficiently disclose a needle assembly itself being "releasably couplable deployable." Thus, a POSITA would understand from the disclosure of the '536 Patent that the patentee possessed the claimed invention, including this claim term, at the time of the application.

As to the third issue, the specification of the '536 Patent sufficiently conveys to a POSITA that the patentee possessed the claimed invention, including a needle assembly indirectly mechanically separable from a proximal end of a user holdable device without a direct mechanical connection of its own to the proximal end of a user holdable device. Shown above is coupling of the needle module through mechanical elements associated with and not with the needle assembly—

924C and 924, respectively. The ’536 Patent makes clear that the above description is only an embodiment. ’536 Patent at 11:46-48, 11:61-66. In other embodiments, the drive shaft coupling arms 924D are not present, such that there are only the connecting arms 924C to mechanically connect the proximal end of the user holdable device and the needle module with the needle assembly. *See, e.g.*, ’536 Patent at 11:46-48. Thus, a POSITA would understand from the disclosure of the ’536 Patent that the patentee possessed the claimed invention, including this claim term, at the time of the application.

c. “a plurality of needles extendable from the deployable needle assembly end surface” (’536 Patent, claims 1, 11)

Respondents allege this term lacks written description support because the specification of the ’536 Patent does not describe or depict a plurality of needles which are extendable from a deployable needle assembly end surface as end surface of the needle assembly 924 has a fixed relationship relative to the plurality of needles such that the needles are not extendable from that surface. Jul. 10, 2023 Invalidity Contentions at 167-68. Not so.

The specification of the ’536 Patent sufficiently conveys to a POSITA that the patentee possessed the claimed invention, including this claim term, at the time of the application. For example, the specification of the ’536 Patent discloses the needle assembly end surface as the plane defined by the tips of the needles of the deployable needle assembly when the needles are not extended and when the needles are extended, they go past the plane. ’536 Patent at 10:9-16, 10:42-48, 11:25-31, 12:9-21, Figures 9C, 9D, 10D, 10E; *see also* U.S. Prov. App. No. 61/449,080 at ¶¶ 64, 69, 71-74, 80-81, 85, Figs. 9C, 9D, 10A-E, cl. 1. The “deployable needle assembly end surface” is depicted in red in the annotated Figures 9C, 9D, 10D, and 10E below from the ’536 Patent (and U.S. Prov. App. No. 61/449,080), where the needles are in a retracted state Figures 9C and 10D and extended/deployed state in Figures 10D and 10E.

[redacted]

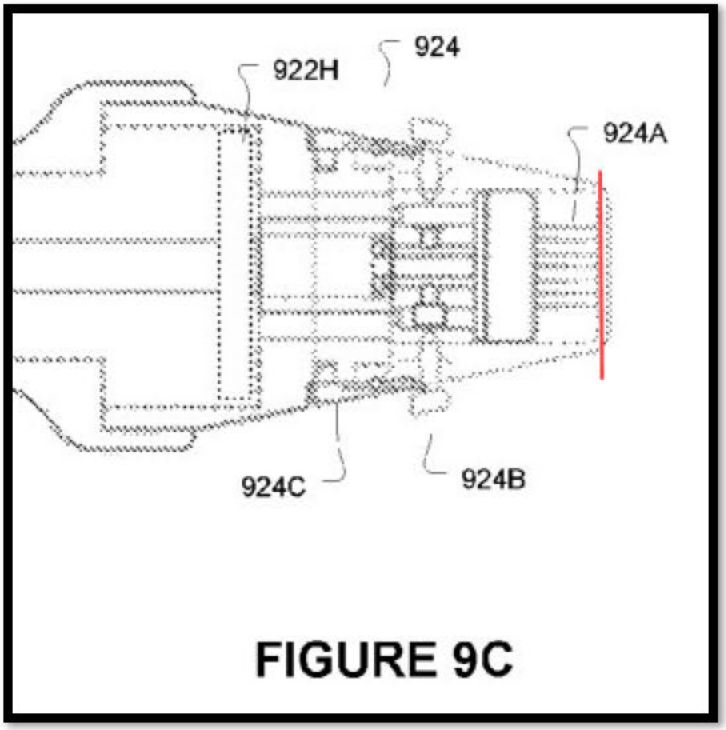

FIGURE 9C

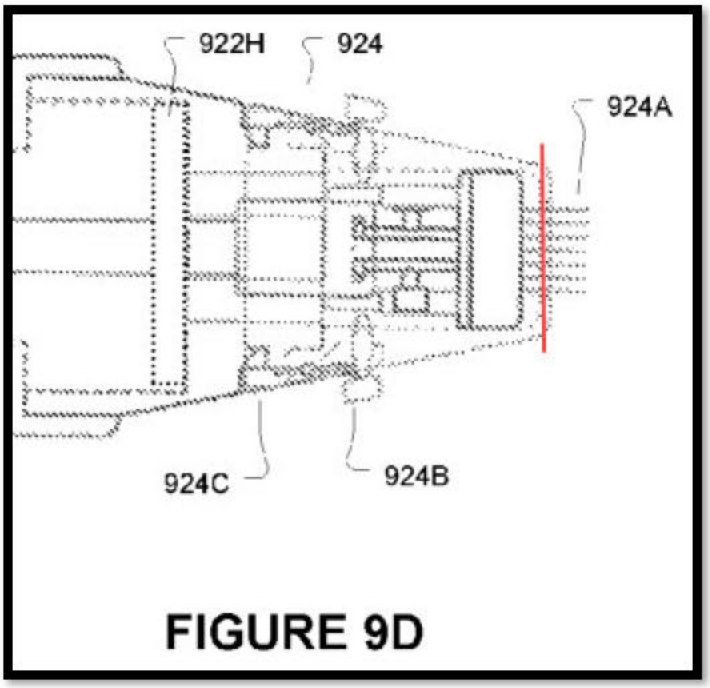

FIGURE 9D

[redacted]

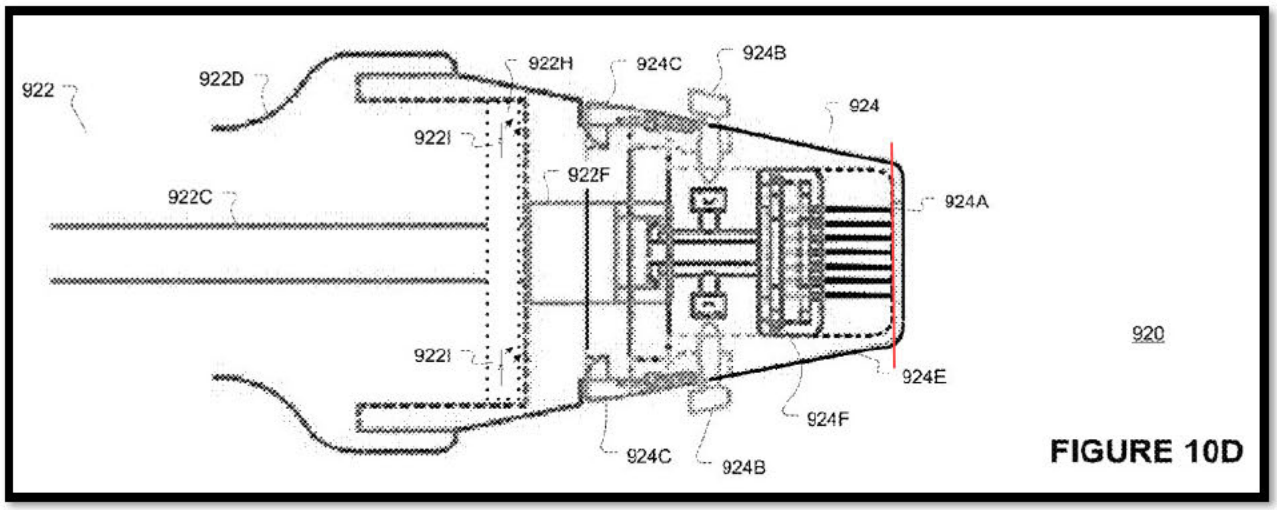

FIGURE 10D

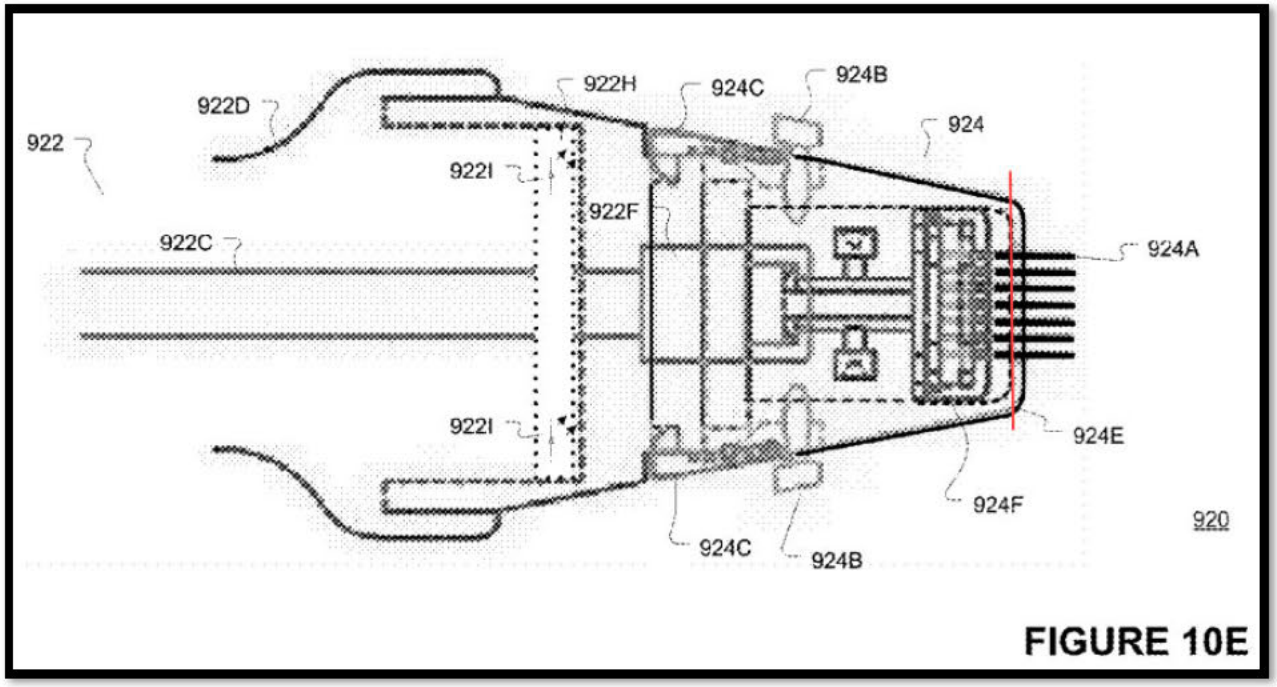

FIGURE 10E

Nothing in the specification of the '536 Patent limits the disclosure of the end surface as Respondents contend. Thus, a POSITA would understand from the disclosure of the '536 Patent that the patentee possessed the claimed invention, including this claim term, at the time of the application.

d. "communicating electrical signals from the proximal end to the plurality of the extendable needles . . . energizing the plurality of extended needles via a signal generator electrically coupled to the plurality of extended needles" ('536 Patent, claim 1)

Respondents allege this term lacks written description support because the specification of the ’536 Patent does not describe a step of “communicating” as being a separate step relative to a step of “energizing” in the context of a method of treating dermatological tissue. Jul. 10, 2023 Invalidity Contentions at 168. Not so.

The specification of the ’536 Patent sufficiently conveys to a POSITA that the patentee possessed the claimed invention, including this claim term, at the time of the application. As an initial mater, there is no requirement in the claims that the “communicating” and “energizing” steps be separate. Regardless, the specification of the ’536 Patent discloses both “communicating electrical signals from the proximal end to the plurality of the extendable needles” and “energizing the plurality of extended needles via a signal generator electrically coupled to the plurality of extended needles.” ’536 Patent at 5:64-6:59, 9:20-22, 9:65-10:16-28, 12:24-40, 13:49-14:4; Figs. 5A-6, 11A, 12 *see also* U.S. Prov. App. No. 61/449,080 at ¶¶ 68, 69, 72, 82, 86, Figs. 11B, 11C, cl. 1. Thus, a POSITA would understand from the disclosure of the ’536 Patent that the patentee possessed the claimed invention, including this claim term, at the time of the application.

e. “draft shaft” (’536 Patent, claim 13)

Respondents allege this term lacks written description support because it is an error that is not correctable by an ITC, and thus lacks support in the specification of the ’536 Patent. Jul. 10, 2023 Invalidity Contentions at 168. Not so.

As noted above courts may correct “obvious minor typographical and clerical errors in patents.” *Pavo Solutions*, 35 F.4th at 1373 (citing *Novo Indus.*, 350 F.3d at 1357). And the ITC may interpret claim terms with minor drafting errors without holding them invalid under § 112. *See, e.g.*, *Certain Multiple Mode Outdoor Grills*, Inv. No. 337-TA-895, Comm’n Op. at 23-26 (doing so for definiteness). There is no dispute that the ITC has the power to construe claims, and certain Respondents conceded at the PTAB that a POSITA would understand “draft shaft” to mean

"drive shaft" and accordingly requested this construction. *Cartessa*, IPR2022-00378, Paper 1 at 19.

Here, the drafting error of "draft shaft" is minor and apparent on the face of the '536 Patent and the specification of the '536 Patent sufficiently conveys to a POSITA that the patentee possessed the claimed invention, including this claim term, at the time of the application—regardless of whether "draft shaft" is corrected to or construed as "drive shaft.". The only reference to "shaft" in the specification of the '536 Patent is to a "drive shaft." *See, e.g.*, '536 Patent at 10:57-61, 10:66-11:2, 11:22-25, 11:27-31, 11:66-12:4, 12:4-8, 12:12-16, Figs. 9C-10E; *see also* U.S. Prov. App. No. 61/449,080 at ¶¶ 72-75, 79, 80-82. This is further supported by the prosecution history of the '536 Patent. For example, the Applicant filed a preliminary amendment replacing limitations directed a motor coupled to at least one needle or to the needle assembly via a "drive shaft" with the limitation that the motor include "a draft shaft releasably couplable to the deployable needle assembly." *See* '536 Patent Prosecution History at 21.

The '812 Patent has a substantially similar specification to the '536 Patent. During prosecution of '812 Patent, an Examiner's Amendment shows that the Examiner changed "draft" in the term "draft shaft" to "drive" in Claim 25, which subsequently became Claim 8 in the issued patent. '812 Patent Prosecution History at 112. This further shows that the USPTO understood "draft shaft" should have been "drive shaft" and is another example that the drafting error was minor and apparent on the face of the '536 Patent.

Thus, a POSITA would understand from the disclosure of the '536 Patent that the patentee possessed the claimed invention, including this claim term, at the time of the application.

f. "the releasably couplable deployable needle module mechanically separatably from the user holdable device proximal end" ('812 Patent, claims 1, 12)

Respondents allege this term lacks written description support because "separatably" does not appear anywhere in the '812 Patent and it is an error that cannot be fixed by the ITC. Jul. 10, 2023 Invalidity Contentions at 169. Not so.

As noted above with respect to the '536 Patent, the written description requirement does not demand the specification recites the claimed invention *in haec verba*. *Pozen*, 696 F.3d at 1167; *Ariad*, 598 F.3d at 1352. So not including the exact claim terms in the specification is not dispositive as to whether there is written description support. Further, a district court may correct "obvious minor typographical and clerical errors in patents." *Pavo Solutions*, 35 F.4th at 1373 (citing *Novo Indus.*, 350 F.3d at 1357). The ITC may interpret claim terms with minor drafting errors without holding them invalid under § 112. *See, e.g.*, *Certain Multiple Mode Outdoor Grills*, Inv. No. 337-TA-895, Comm'n Op. at 23-26 (doing so for definiteness). The ITC also has the power to construe the patent claims and certain Respondents conceded before the PTAB that, "as it would be understood by a POSA," "mechanically separatably" means "mechanically separable." *Cartessa Aesthetics, LLC v. Serendia, LLC*, IPR2022-00377, Paper 1 at 24 (PTAB Dec. 28, 2021).

Here, the drafting error of "separatably" is minor and apparent on the face of the '812 Patent and the specification of the '812 Patent sufficiently conveys to a POSITA that the patentee possessed the claimed invention, including this claim term, at the time of the application—regardless of whether "separatably" is corrected to or construed as "separable" or "separatable." The specification of the '812 Patent describes that (1) the needle assembly 924F of deployable needle module 924 includes drive shaft coupling arms 924D that engage and disengage, in other words attach or couple, with recesses 922G of motor and LED module 922 of handle module 920; and (2) the MLM connecting/locking arms 924C of deployable needle module 924 engage and disengage, in other words attach or couple, with recesses 925D of motor and LED module 922 of handle

[redacted]

module 920. '812 Patent at 11:15-13:2; *see also* U.S. Prov. App. No. 61/449,080 at ¶¶ 64, 69, 71-74, 80-81, 85, Figs. 9C, 9D, 10A-E, cl. 1. The specifications of the '812 Patent also describes phases of engagement, attachment, or coupling in Figures 10A-D and the associated portions of the written specification. '812 Patent at 11:36-12:53; *see also* U.S. Prov. App. No. 61/449,080 at ¶¶ 64, 69, 71-74, 80-81, 85, Figs. 9C, 9D, 10A-E, cl. 1.

As seen below, Figures 10A-D of the '812 Patent shows certain stages of engagement, attachment, or coupling between MLM connecting/locking arms 924C and motor and LED module 922, including when the MLM connecting/locking arms 924C is separate from motor and LED module 922 (Figures 10A-C) (also seen in Figures 10A-D of U.S. Prov. App. No. 61/449,080):

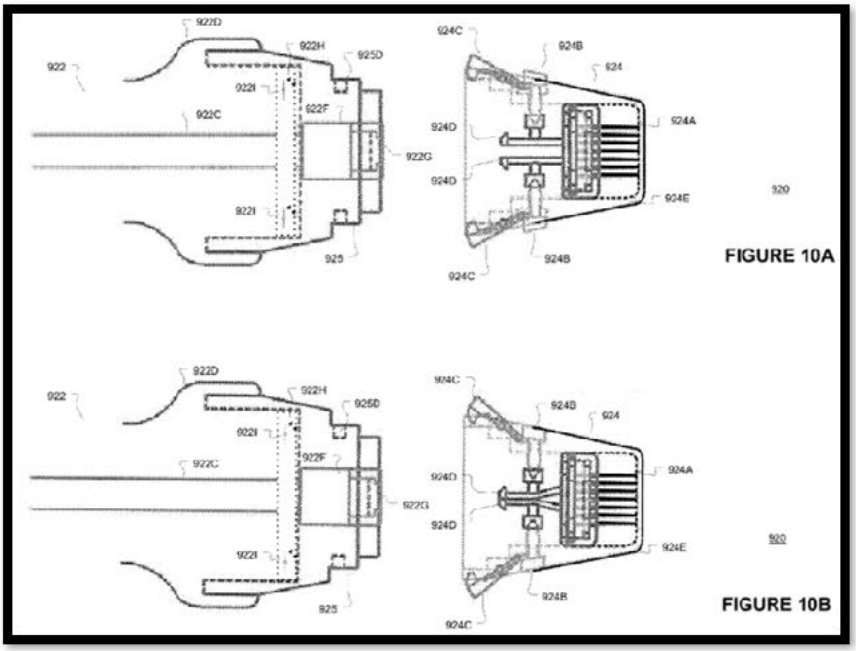

[redacted]

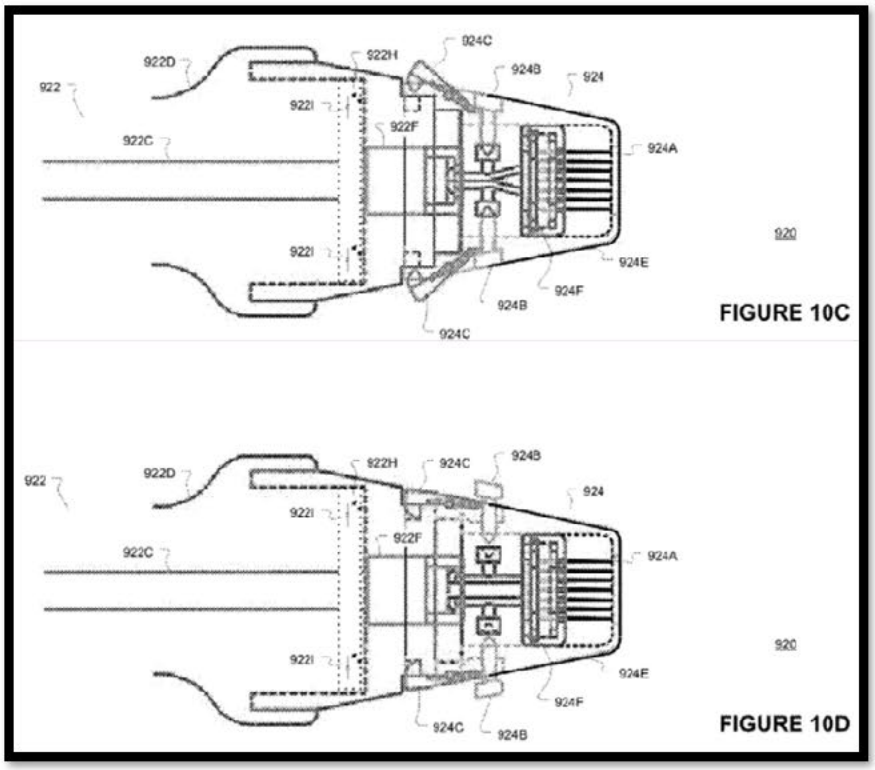

The specifications of the '812 Patent describes a simplified cross-sectional diagram of a DNM interface 925, including recesses 925D in Figure 10F and the associated portions of the written specification. '812 Patent at 11:32-34, 12:50-55; *see also* U.S. Prov. App. No. 61/449,080 at ¶¶ 64, 69, 71-74, 80-81, 85, Fig. 10F, cl. 1.

As seen below, Figure 10F of the '812 Patent shows a simplified cross-sectional diagram of a DNM interface 925, including recesses 925D (also seen in Figure 10F of U.S. Prov. App. No. 61/449,080):

[redacted]

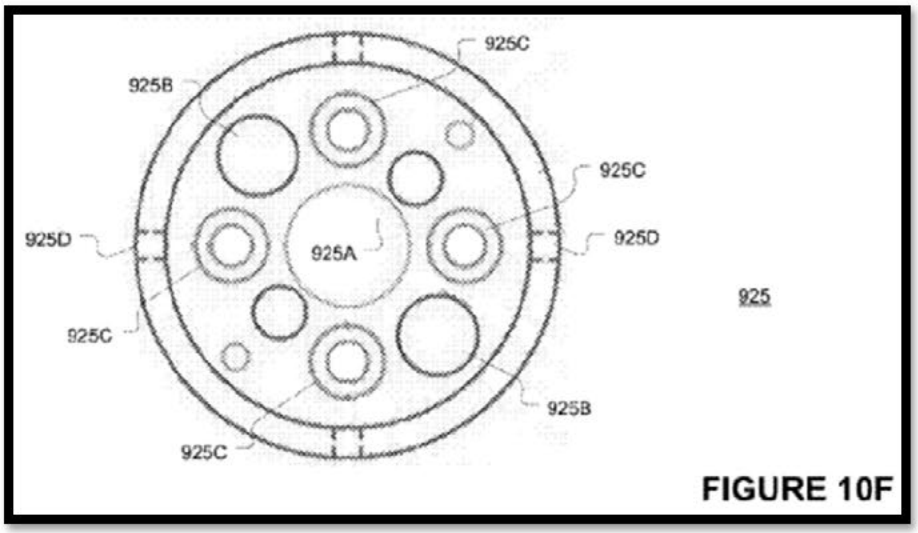

The specification of '812 Patent show the engagement, attachment, or coupling between the MLM connecting/locking arms 924C and motor and LED module 922 in Figures 9C and 9D and the associated portions of the written specification. '812 Patent at 10:66-11:61; *see also* U.S. Prov. App. No. 61/449,080 at ¶¶ 64, 69, 71-74, 80-81, 85, Fig. 10F, cl. 1.

As seen below, Figures 9C and 9D of the '812 Patent shows engagement, attachment, or coupling between the MLM connecting/locking arms 924C and motor and LED module 922 (also seen in Figures 9C and 9D of U.S. Prov. App. No. 61/449,080):

[redacted]

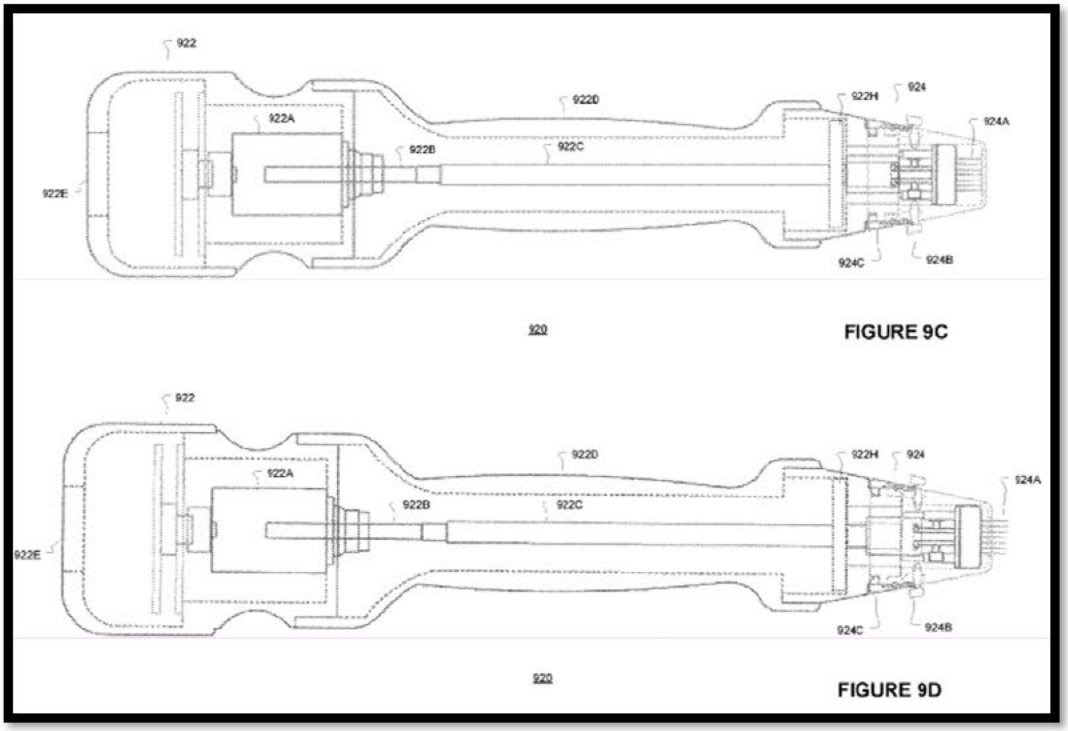

The specification of the '812 Patent describes that: "In a further embodiment the DLM 924 may be a detachable cartridge module (DCM) 924 where the DCM may be changed between therapy application(s) or client(s). In a further embodiment, the DCM 924 may be disposed after usage or cleaned via an autoclave or chemical process." '812 Patent at 11:9-14; *see also* U.S. Prov. App. No. 61/449,080 at ¶71.

The specification of the '812 Patent describes a plurality of needles being in a retracted or extended/deployed state. *See, e.g.*, '812 Patent at 10:66-11:2 ("The drive arm(s) 922B may be coupled to one or more drive shafts 922C so the drive shafts may be moved longitudinally to deploy and retract one or more needles 924A when the MLM 922 is operatively coupled to the DNM 924."), 11:27-31 (the drive shaft 922C "may reliably drive reliably drive one or more needles 924A of the DNM 924 (from a retracted or deployed position such as shown in FIGS. 9C and 9D, respectively)."). The two states are illustrated in Figs. 9C and 9D and 10D and 10E:

[redacted]

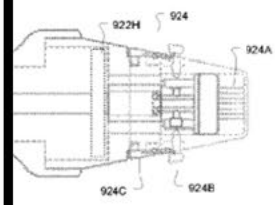

FIGURE 9C

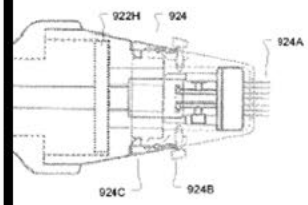

FIGURE 9D

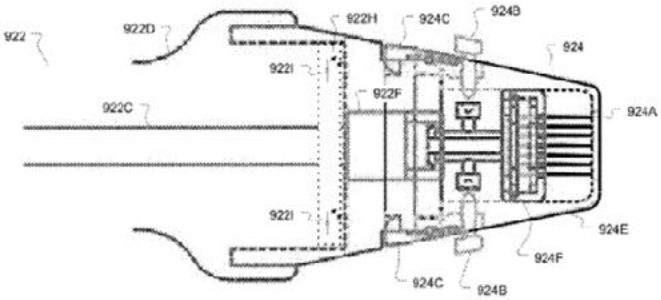

FIGURE 10D

Thus, a POSITA would understand from the disclosure of the '812 Patent that the patentee possessed the claimed invention, including this claim term, at the time of the application.

g. "the needle assembly movable within the releasably couplable deployable needle module to extend the plurality of needles from the releasably couplable deployable needle assembly end surface while at least one electrical contact of the needle assembly remains electrically coupled to at least one electrical contact of the user holdable device proximal end" ('812 Patent, claims 1, 12)

Respondents allege this term lacks written description support because "the releasably couplable deployable needle assembly end surface" of the needle assembly 924 has a fixed relationship relative to the plurality of needles such that the needles are not extend from that surface. Jul. 10, 2023 Invalidity Contentions at 169-70. Not so.

The specification of the '812 Patent sufficiently conveys to a POSITA that the patentee possessed the claimed invention, including this claim term, at the time of the application. The specification of the '812 Patent discloses the needle assembly end surface as the plane defined by the tips of the needles of the deployable needle assembly when the needles are not extended and when the needles are extended, they go past the plane. '812 Patent at 10:32-35, 10:66-11:5, 11:52-58, 12:38-50, Figures 9C, 9D, 10D, 10E; *see also* U.S. Prov. App. No. 61/449,080 at ¶¶ 64, 69, 71-74, 80-81, 85, Figs. 9C, 9D, 10A-E, cl. 1. The "deployable needle assembly end surface" is depicted in red in the annotated Figures 9C, 9D, 10D, and 10E below from the '812 Patent (and U.S. Prov. App. No. 61/449,080), where the needles are in a retracted state Figures 9C and 10D and extended/deployed state in Figures 10D and 10E.

[redacted]

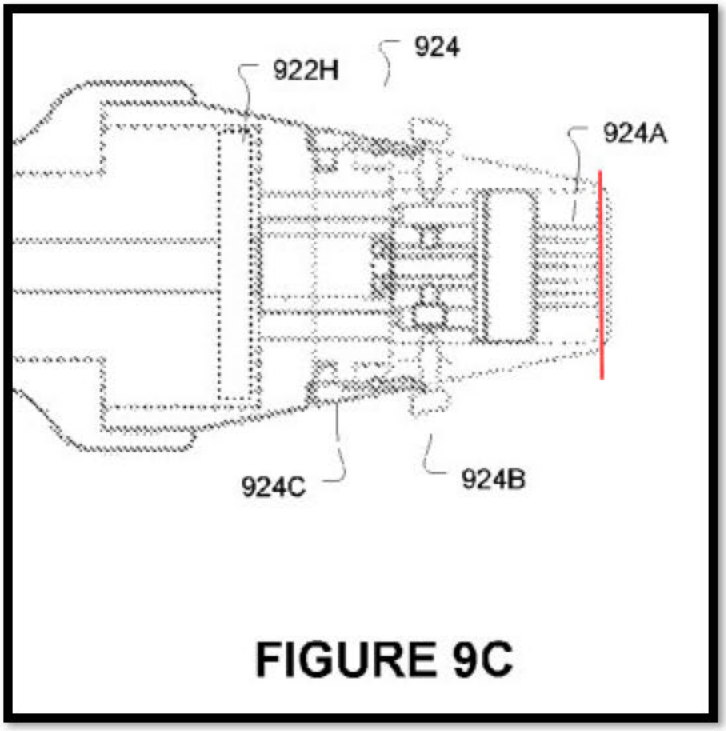

FIGURE 9C

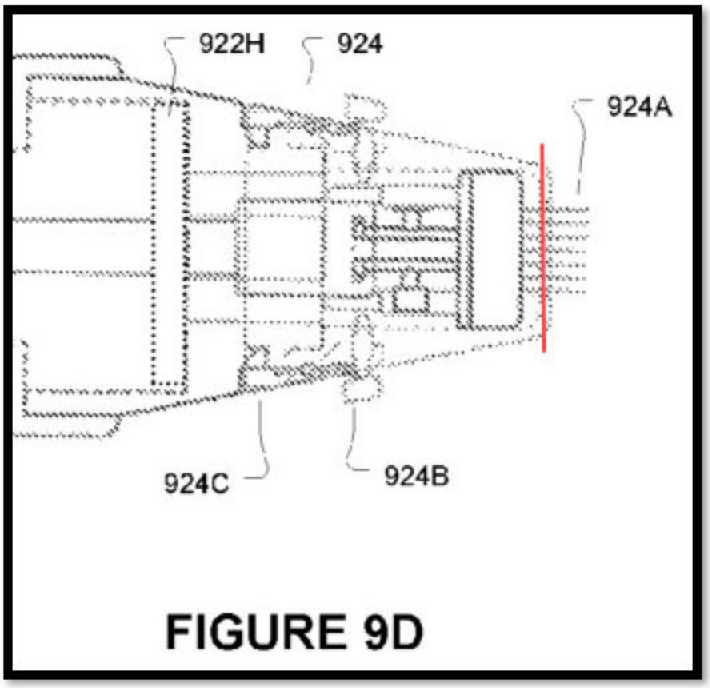

FIGURE 9D

[redacted]

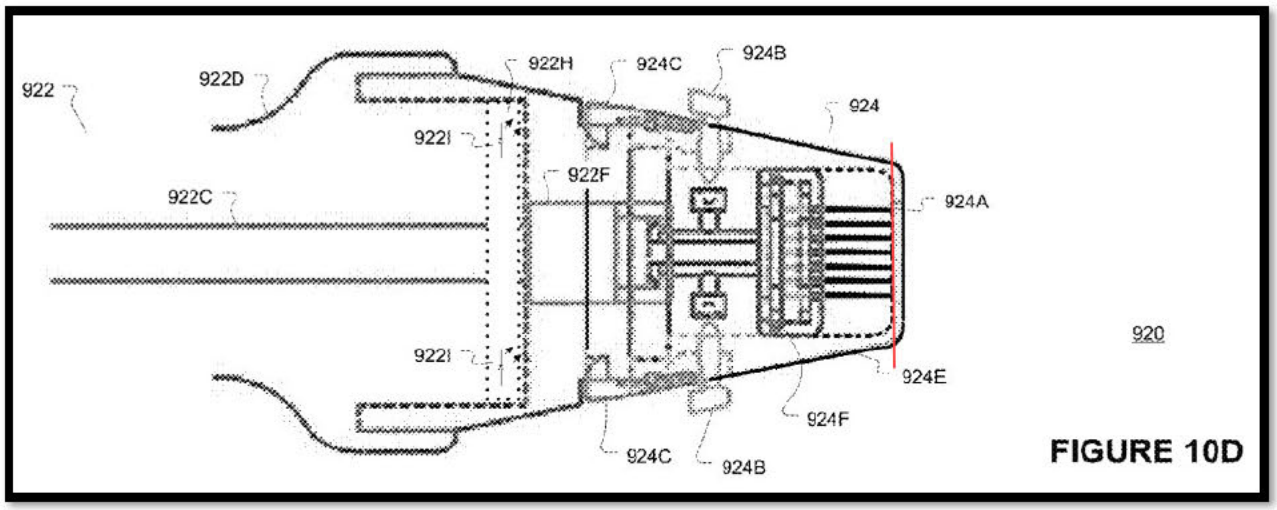

FIGURE 10D

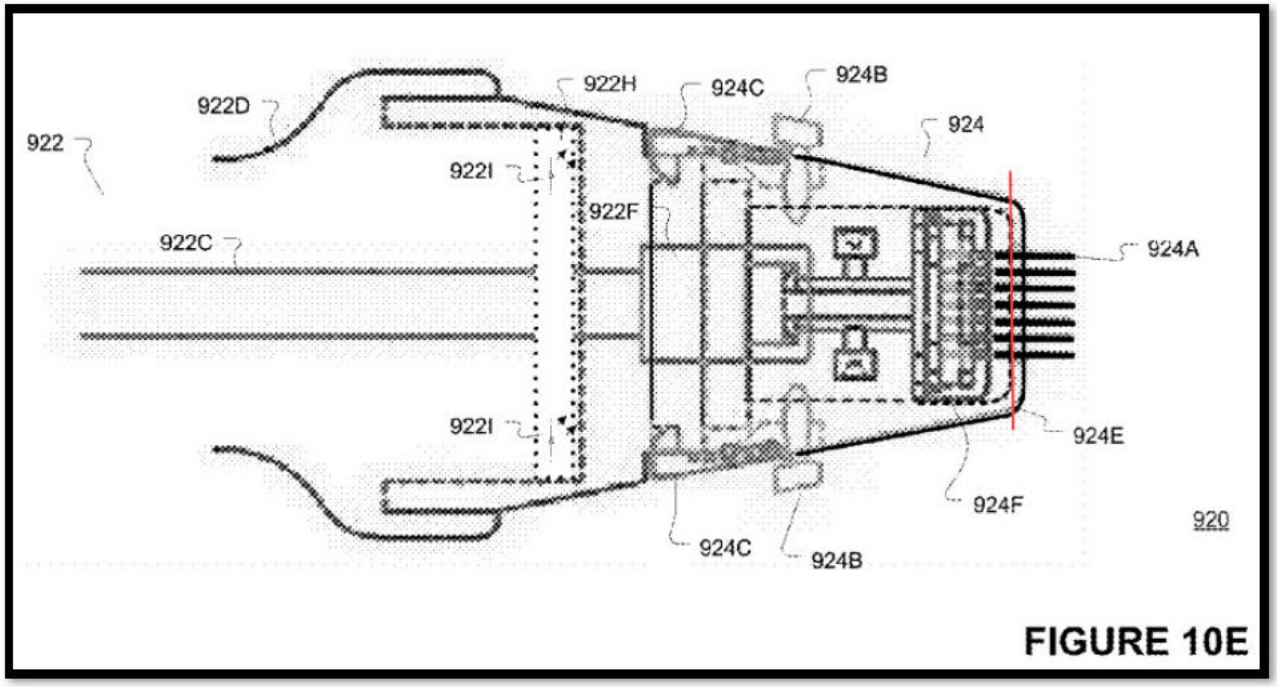

FIGURE 10E

Thus, a POSITA would understand from the disclosure of the '812 Patent that the patentee possessed the claimed invention, including this claim term, at the time of the application.

2. The '536, '774, and '812 Patents' Asserted Claims Do Not Require Undue Experimentation

a. "pulsed radio frequency signals" ('774 Patent, "All claims")[36]

[36] Respondents assert "All claims" of the '774 Patent are implicated, but Serendia only assert a subset of those claims (claims 13, 14) and only claim 11 upon which those claims depend

Respondents alleges this term is not enabled because of the same reasons they contend it lacks written description. Jul. 10, 2023 Invalidity Contentions at 171-74. Not so.

A POSITA would be able to practice the claimed invention, including this claim term, without undue experimentation. Section VII.B.1.a. provides examples of the portions in the specification of the ’536 Patent from which a POSITA may draw sufficient guidance to practice the claimed invention and reasoning as to why Na ’848 does not disclosed pulsed radio frequency signals. Certain Respondents have conceded at the PTAB that “it was well known in the art to use pulsed radio-frequency to deliver the RF current.” *Cartessa Aesthetics, LLC v. Serendia, LLC*, IPR2022-00376, Paper 1 at 16, 27 (PTAB Dec. 28, 2021). A POSITA thus would not have needed to engage in undue experimentation to implement the specification’s teachings.

With respect to the *Wands* factors, each factor points to enablement, or at least neutral:

- Factor 1 (The quantity of experimentation needed to make or use the invention based on the content of the disclosure): The quantity of experimentation needed to make or use the invention based on the content of the disclosure would not be high and Respondents point to nothing but conclusory statements to contend experimentation be high and “potentially impossible”.

- Factor 2 (The amount of direction provided by the inventor): The ’774 Patent provides ample direction. *See, e.g.*, ’774 Patent at Figs. 5A, 5B, 6, 10:20-23, 10:39-50, 6:12-18, 6:59-61.

- Factor 3 (The existence of working examples): The ’774 Patent provides working examples. *See, e.g.*, ’774 Patent at Figs. 5A, 5B, 6, 10:20-23, 10:39-50, 6:12-18, 6:59-61.

- Factor 4 (The nature of the invention): The subject matter of the claimed invention pertains to devices and methods for treating dermatological tissue.

- Factor 5 (The state of the prior art): The prior art provides meaningful guidance to a POSITA in the field of dermatological treatment.

---

explicitly include “pulsed radio frequency signals.” To be consistent with the nomenclature for the rest of Respondents’ final invalidity contentions regarding § 112, “All claims” should be considered “claim 11.”

- Factor 6 (The level of one of ordinary skill): The parties assert the level of POSITA is high, which supports enablement.

- Factor 7 (The level of predictability in the art): The field is more predictable than, e.g., that of pharmaceutical compound development.

- Factor 8 (The breadth of the claims): The claims are focused on certain devices and methods for treating dermatological tissue.

Dr. Na's publication in *Nature* is also indicative of enablement. Regarding Respondents; discussion of Na '848, Complainant incorporates by reference Section VII.B.1.a. Complainant notes that fact discovery is ongoing and expert discovery has not yet occurred, and reserves the right to rely on adiditonal evidence developed an expert opinion to show a POSITA may draw sufficient guidance to practice the claimed invention with respect to the *Wands* factors. Respondents will be unable to show lack of enablement by clear and convincing evidence. *See, e.g., Cephalon, Inc. v. Watson Pharms.*, 707 F.3d 1130, 1339-40 (Fed. Cir. 2013).

b. "the releasably couplable deployable needle assembly, the deployable needle assembly mechanically separatably from the proximal end" ('536 Patent, claims 1,11)

Respondents allege this term is not enabled because "separatably" is an error that cannot be fixed by the ITC and a POSITA would not be able to read the specification of the '536 Patent and practice the claimed invention based on this claim term. Jul 10 , 2023 Invalidity Contentions at 174-76. Not so. Respondents provide no explanation other than the general assertion that the claims are not enabled and makes no assertion that the claims would not be enabled if the typographical error were corrected or the claim were construed as Complaint has proposed and certain Respondents previously proposed to the PTAB.

As noted above, a district court may correct "obvious minor typographical and clerical errors in patents." *Pavo Solutions*, 35 F.4th at 1373 (citing *Novo Indus.*, 350 F.3d at 1357). The ITC may interpret claim terms with minor drafting errors without holding them invalid under

§ 112. *See, e.g.*, *Certain Multiple Mode Outdoor Grills*, Inv. No. 337-TA-895, Comm'n Op. at 23-26 (doing so for definiteness). The ITC also indisputably has the power to construe the claims.

Here, the drafting error of "separatably" is minor and apparent on the face of the '536 Patent and a POSITA would be able to practice the claimed invention, including this claim term, without undue experimentation. Section VII.B.1.b shows the drafting error and provides exemplary portions in the specification of the '536 Patent from which a POSITA may draw sufficient guidance to practice the claimed invention.

With respect to the *Wands* factors, each factor points to enablement, or at least neutral:

- Factor 1 (The quantity of experimentation needed to make or use the invention based on the content of the disclosure): The quantity of experimentation needed to make or use the invention based on the content of the disclosure would not be high and Respondents point to nothing but conclusory statements to contend experimentation be high and "potentially impossible".

- Factor 2 (The amount of direction provided by the inventor): The '774 Patent provides ample direction. *See, e.g.*, '536 Patent at Figs. 9C, 9D, 10A-D, 10:42-12:40.

- Factor 3 (The existence of working examples): The '774 Patent provides working examples. *See, e.g.*, '536 Patent at Figs. Figs. 9C, 9D, 10A-D, 10:42-12:40.

- Factor 4 (The nature of the invention): The subject matter of the claimed invention pertains to devices and methods for treating dermatological tissue.

- Factor 5 (The state of the prior art): The prior art provides meaningful guidance to a POSITA in the field of dermatological treatment.

- Factor 6 (The level of one of ordinary skill): The parties assert the level of POSITA is high, which supports enablement.

- Factor 7 (The level of predictability in the art): The field is more predictable than, e.g., that of pharmaceutical compound development.

- Factor 8 (The breadth of the claims): The claims are focused on certain devices and methods for treating dermatological tissue.

Complainant notes that fact discovery is ongoing and expert discovery has not yet occurred, and reserves the right to rely on adiditonal evidence developed an expert opinion to show a

POSITA may draw sufficient guidance to practice the claimed invention with respect to the *Wands* factors. Respondents will be unable to show lack of enablement by clear and convincing evidence. *See, e.g., Cephalon, Inc. v. Watson Pharms.*, 707 F.3d 1130, 1339-40 (Fed. Cir. 2013).

c. "the motor including a draft shaft releasably couplable to the deployable needle assembly" ('536 Patent, claim 13)

Respondents allege this term is not enabled because "draft shaft" is an error that cannot be fixed by the ITC and a POSITA would not be able to read the specification of the '536 Patent practice the claimed invention based on this claim term. Jul. 10, 2023 Invalidity Contentions at 176-78. Not so. Respondents provide no explanation other than the general assertion that the claims are not enabled and makes no assertion that the claims would not be enabled if the typographical error were corrected or the claim were construed as Complaint has proposed and certain Respondents previously proposed to the PTAB.

As noted above, a district court may correct "obvious minor typographical and clerical errors in patents." *Pavo Solutions*, 35 F.4th at 1373 (citing *Novo Indus.*, 350 F.3d at 1357). The ITC may interpret claim terms with minor drafting errors without holding them invalid under § 112. *See, e.g.*, *Certain Multiple Mode Outdoor Grills*, Inv. No. 337-TA-895, Comm'n Op. at 23-26 (doing so for definiteness). The ITC also indisputably has the power to construe the claims.

Here, the drafting error of "draft shaft" is minor and apparent on the face of the '536 Patent and a POSITA would be able to practice the claimed invention, including this claim term, without undue experimentation. Section VII.B.1.e shows the drafting error and provides exemplary portions in the specification of the '536 Patent from which a POSITA may draw sufficient guidance to practice the claimed invention.

With respect to the *Wands* factors, each factor points to enablement, or at least neutral:

- Factor 1 (The quantity of experimentation needed to make or use the invention based on the content of the disclosure): The quantity of experimentation needed to

make or use the invention based on the content of the disclosure would not be high and Respondents point to nothing but conclusory statements to contend experimentation be high and "potentially impossible".

- Factor 2 (The amount of direction provided by the inventor): The '774 Patent provides ample direction. *See, e.g.*, '536 Patent at Figs. 9C, 9D, 10A-D, 10:42-12:40.

- Factor 3 (The existence of working examples): The '774 Patent provides working examples. *See, e.g.*, '536 Patent at Figs. Figs. 9C, 9D, 10A-D, 10:42-12:40.

- Factor 4 (The nature of the invention): The subject matter of the claimed invention pertains to devices and methods for treating dermatological tissue.

- Factor 5 (The state of the prior art): The prior art provides meaningful guidance to a POSITA in the field of dermatological treatment.

- Factor 6 (The level of one of ordinary skill): The parties assert the level of POSITA is high, which supports enablement.

- Factor 7 (The level of predictability in the art): The field is more predictable than, e.g., that of pharmaceutical compound development.

- Factor 8 (The breadth of the claims): The claims are focused on certain devices and methods for treating dermatological tissue.

Complainant notes that fact discovery is ongoing and expert discovery has not yet occurred, and reserves the right to rely on adiditonal evidence developed an expert opinion to show a POSITA may draw sufficient guidance to practice the claimed invention with respect to the *Wands* factors. Respondents will be unable to show lack of enablement by clear and convincing evidence. *See, e.g., Cephalon, Inc. v. Watson Pharms.*, 707 F.3d 1130, 1339-40 (Fed. Cir. 2013).

d. "the releasably couplable deployable needle module mechanically separatably from the user holdable device proximal end" ('812 Patent, claims 1, 12)

Respondents allege this term is not enabled because "separatably" is an error that cannot be fixed by the ITC and a POSITA would not be able to read the specification of the '812 Patent practice the claimed invention based on this claim term. Jul. 10, 2023 Invalidity Contentions at 179-80. Not so. Respondents provide no explanation other than the general assertion that the

claims are not enabled and makes no assertion that the claims would not be enabled if the typographical error were corrected or the claim were construed as Complaint has proposed and certain Respondents previously proposed to the PTAB.

As noted above, a district court may correct "obvious minor typographical and clerical errors in patents." *Pavo Solutions*, 35 F.4th at 1373 (citing *Novo Indus.*, 350 F.3d at 1357). The ITC may interpret claim terms with minor drafting errors without holding them invalid under § 112. *See, e.g.*, *Certain Multiple Mode Outdoor Grills*, Inv. No. 337-TA-895, Comm'n Op. at 23-26 (doing so for definiteness). The ITC also indisputably has the power to construe the claims.

Here, the drafting error of "separatably" is minor and apparent on the face of the '812 Patent and a POSITA would be able to practice the claimed invention, including this claim term, without undue experimentation. Section VII.B.1.f shows the drafting error and provides exemplary portions in the specification of the '812 Patent from which a POSITA may draw sufficient guidance to practice the claimed invention.

With respect to the *Wands* factors, each factor points to enablement, or at least neutral:

- Factor 1 (The quantity of experimentation needed to make or use the invention based on the content of the disclosure): The quantity of experimentation needed to make or use the invention based on the content of the disclosure would not be high and Respondents point to nothing but conclusory statements to contend experimentation be high and "potentially impossible".

- Factor 2 (The amount of direction provided by the inventor): The '774 Patent provides ample direction. *See, e.g.*, '812 Patent at Figs. 9C, 9D, 10A-D, 10:66-13:2.

- Factor 3 (The existence of working examples): The '774 Patent provides working examples. *See, e.g.*, '812 Patent at Figs. Figs. 9C, 9D, 10A-D, 10:66-13:2.

- Factor 4 (The nature of the invention): The subject matter of the claimed invention pertains to devices and methods for treating dermatological tissue.

- Factor 5 (The state of the prior art): The prior art provides meaningful guidance to a POSITA in the field of dermatological treatment.

- Factor 6 (The level of one of ordinary skill): The parties assert the level of POSITA is high, which supports enablement.

- Factor 7 (The level of predictability in the art): The field is more predictable than, e.g., that of pharmaceutical compound development.

- Factor 8 (The breadth of the claims): The claims are focused on certain devices and methods for treating dermatological tissue.

Complaint notes that fact discovery is ongoing and expert discovery has not yet occurred, and reserves the right to rely on adiditonal evidence developed an expert opinion to show a POSITA may draw sufficient guidance to practice the claimed invention with respect to the *Wands* factors. Respondents will be unable to show lack of enablement by clear and convincing evidence. *See, e.g., Cephalon, Inc. v. Watson Pharms.*, 707 F.3d 1130, 1339-40 (Fed. Cir. 2013).

3. The '536, '774, and '812 Patents' Asserted Claims are Definite[37]

As an initial matter, Respondents manufactured indefiniteness positions conflict with certain Respondents' ability to understand and apply the claims in unsuccessfully challenging their validity before the PTAB. *Cartessa*, IPR2022-00378, Paper 1 at 18-19; *Cartessa*, IPR2022-00376,

[37] Respondents assert more claim terms in the Asserted Patents are indefinite in their final invalidity contentions than claim terms they claim are indefinite for claim construction briefing. *Compare* Jul. 10, 2023 Invalidity Contentions at 157-61, 181-83 *with* Amended Joint Claim Construction Chart. Respondents have waived any indefiniteness argument not included in their claim construction briefing. *Cent. Admixture Pharmacy Servs., Inc. v. Advanced Cardiac Sols., P.C.*, 482 F.3d 1347, 1356 (Fed. Cir. 2007) ("The district court found that [the defendant] waived any argument with respect to this term by failing to raise it during the claim construction phase. We agree."); *see also Finalrod IP, LLC v. John Crane, Inc.*, C.A. No. 15-cv-00097, 2019 WL 4061703, at *2 (W.D. Tex. May 30, 2019) ("Defendants waived their indefiniteness argument regarding 'compressive force' limitations because they failed to raise it during the claim construction phase."); *U.S. Well Servs., LLC v. TOPS Well Servs.*, C.A. No. 19-cv-00237, 2020 WL 9439469, at *34 (S.D. Tex. Sept. 18, 2020); *Music Choice v. Stingray Digital Grp. Inc.*, No. 16-cv-00586, 2019 WL 8110069, at *3 (E.D. Tex. Nov. 19, 2019); *Ericsson Inc. v. TCL Commc'n Tech. Holdings, Ltd.*, C.A. No. 2:15-cv-00011, 2017 WL 5137401, at *15 (E.D. Tex. Nov. 4, 2017), *rev'd on other grounds*, 955 F.3d 1317 (Fed. Cir. 2020). ("[F]ailure to timely raise these claim construction arguments should ordinarily result in waiver of the arguments.").

Paper 1 at 14; *Cartessa*, IPR2022-00377, Paper 1 at 24. As those Respondents acknowledged at that time, nothing about the claim language would lack sufficient clarity to a POSA.

a. "a [user holdable device releasably couplable] deployable needle assembly end surface" ('536 Patent, claims 1, 11) / "the deployable needle assembly mechanically separatably from the proximal end" ('536 Patent, claims 1, 11) / "the releasably couplable deployable needle assembly end surface" ('812 Patent, claims 1, 12)

Respondents appear to make two separate arguments in their contentions. First, they allege that the word "separatably" is an error that is not correctable by the ITC. *See* Jul. 10, 2023 Invalidity Contentions at 181-82. Then, they contend, without support, that the "the deployable needle assembly mechanically separatably from the proximal end" in the '536 Patent is indefinite. *Id.* Second, they contend that "the releasably couplable deployable" language of the '812 Patent is unclear with relation to the needle assembly, and therefore, the claim is indefinite. *Id.* Both arguments fail.

As to the first argument, and as noted above, the drafting error of "separatably" is minor and apparent on the face of the '536 Patent, which correctable by courts and the ITC. *Pavo Solutions*, 35 F.4th at 1373 (citing *Novo Indus.*, 350 F.3d at 1357); *Certain Multiple Mode Outdoor Grills*, Inv. No. 337-TA-895, Comm'n Op. at 23-26. Also, "evidence of culpability or intent to deceive by delaying formal correction" is required to invalidate a patent based on an "obvious administrative error." *Hoffer v. Microsoft Corp.*, 405 F.3d 1326, 1331 (Fed. Cir. 2005). Respondents have not asserted there was any culpability or intent to deceive by delaying formal correction, nor could there be based on the '536 or '812 Patents and their prosecution history.

Further, the specification of the '536 Patent and knowledge of a POSITA inform a POSITA with reasonable certainty of the meaning and scope of the term "the deployable needle assembly mechanically separatably from the proximal end." *See* Section VII.B.1.b. That the phrase is well

understood is also clear from the prosecution history of the ’536 Patent. For example, the Examiner rejected then-pending claim 3, which included the term “separatably,” over prior art that allegedly taught a “releasably couplable needle assembly.” ’536 Patent Prosecution History at 279. The ITC also has the power to construe the patent claims and certain Respondents conceded before the PTAB that, “as it would be understood by a POSA,” “mechanically separatably” means “mechanically separable.” *Cartessa*, IPR2022-00378, Paper 1 at 18.

As to the second argument, the specification of the ’812 Patent and knowledge of a POSITA inform a POSITA with reasonable certainty of the meaning and scope of the term “releasably couplable deployable needle assembly end surface.” *See* Section VII.B.1.g. Further, based on the grammar of the term as issue, the needle assembly may be releasably couplable to a proximal end of a user holdable device through, directly or indirectly, such as through the releasably couplable deployable needle module, and deployable to have a plurality of needles in an extended state.

This grammatical reading is supported by the claims and specification of the ’812 Patent. For example, claim 1 of the ’812 Patent states “the releasably couplable deployable needle module mechanically separatably from the user holdable device proximal end and including a needle assembly including a plurality of needles.” Claim 1 of the ’812 Patent also recites, “the needle assembly movable within the releasably couplable deployable needle module to extend the plurality of needles from the releasably couplable deployable needle assembly end surface.”

Thus, these terms are well understood and the specifications of the ’536 and ’812 Patents and knowledge of a POSITA inform a POSITA with reasonable certainty about the meaning and scope of those terms. To the extent necessary, fact and expert discovery is expected to show as much.

[redacted]

b. "the releasably couplable deployable needle module mechanically separatably from the user holdable device proximal end" ('812 Patent, claims 1, 12)

Respondents again allege that "separatably" is an error that is not correctable by the ITC, and then contend that "the releasably couplable deployable needle module mechanically separatably from the user holdable device proximal end" term is indefinite because a POSITA would not be informed with reasonable certainty as to the scope of the invention. Jul. 10, 2023 Invalidity Contentions at 182-83. Not so.

First, as noted above, the drafting error of "separatably" is minor and apparent on the face of the '812 Patent, which correctable by courts and the ITC. *Pavo Solutions*, 35 F.4th at 1373 (citing *Novo Indus.*, 350 F.3d at 1357); *Certain Multiple Mode Outdoor Grills*, Inv. No. 337-TA-895, Comm'n Op. at 23-26. Also, "evidence of culpability or intent to deceive by delaying formal correction" is required to invalidate a patent based on an "obvious administrative error." *Hoffer*, 405 F.3d at 1331. Respondents have not asserted there was any culpability or intent to deceive by delaying formal correction, nor could there be based on the '812 Patent and its prosecution history. To the contrary, certain Respondents conceded before the PTAB that, "as it would be understood by a POSA," "mechanically separatably" means "mechanically separable," and Respondents do not dispute that the ITC has the power to construe the claim term accordingly. *Cartessa*, IPR2022-00377, Paper 1 at 24.

Further, the specification of the '812 Patent and knowledge of a POSITA inform a POSITA with reasonable certainty of the meaning and scope of the term "the releasably couplable deployable needle module mechanically separatably from the user holdable device proximal end." *See* Section VII.B.1.f. That the phrase is well understood is also clear from the prosecution history of the '812 Patent. For example, the Examiner rejected then-pending claim 21, which included the

term "separatably," over prior art that allegedly taught a "couplable deployable needle assembly," which is part of the deployable needle module. '812 Patent Prosecution History at 582.

Thus, this term is well understood and the specification of the '812 Patent and knowledge of a POSITA inform a POSITA with reasonable certainty about the meaning and scope of this term. To the extent necessary, fact and expert discovery is expected to show as much.

c. "draft shaft" ('536 Patent, claim 13)

Respondents again allege that "draft shaft" is an error that is not correctable by the ITC and that a POSITA would not be informed with reasonable certainty as to the scope of the invention. Jul. 10, 2023 Invalidity Contentions at 158. Not so.

As noted above, the drafting error of "draft shaft" is minor and apparent on the face of the '536 Patent, which correctable by courts and the ITC. *Pavo Solutions*, 35 F.4th at 1373 (citing *Novo Indus.*, 350 F.3d at 1357); *Certain Multiple Mode Outdoor Grills*, Inv. No. 337-TA-895, Comm'n Op. at 23-26. Also, "evidence of culpability or intent to deceive by delaying formal correction" is required to invalidate a patent based on an "obvious administrative error." *Hoffer*, 405 F.3d at 1331. Also, "evidence of culpability or intent to deceive by delaying formal correction" is required to invalidate a patent based on an "obvious administrative error." *Hoffer* , 405 F.3d at 1331. Respondents have not asserted there was any culpability or intent to deceive by delaying formal correction, nor could there be based on the '536 Patent and its prosecution history. To the contrary, certain Respondents have conceded that "draft shaft" should be construed as "drive shaft" before the PTAB, and Respondents do not dispute that the ITC has the power to construe the claim term accordingly. *Cartessa*, IPR2022-00378, Paper 1 at 19.

Further, the specification of the '536 Patent and knowledge of a POSITA inform a POSITA with reasonable certainty of the meaning and scope of the term "draft shaft." *See* Section VII.B.1.e. Additionally, the '812 Patent has a substantially similar specification to the '536 Patent.

[redacted]

During prosecution of ’812 Patent, an Examiner’s Amendment shows that the Examiner changed “draft” in the term “draft shaft” to “drive” in Claim 25, which subsequently became Claim 8 in the issued patent. ’812 Patent Prosecution History at 112. This shows that the USPTO understood “draft shaft” should have been “drive shaft.” This is another example showing there is reasonable certainty to POSITA as to the scope of “draft shaft.”

Thus, this term is well understood and the specification of the ’536 Patent and knowledge of a POSITA inform a POSITA with reasonable certainty about the meaning and scope of this term. To the extent necessary, fact and expert discovery is expected to show as much.

* * *

Respondents thus fall well short of its burden of proving invalidity by clear and convincing evidence. *Tech. Licensing*, 545 F.3d at 1327 (“When an alleged infringer attacks the validity of an issued patent, our well-established law places the burden of persuasion on the attacker to prove invalidity by clear and convincing evidence.”).

VIII. 35 U.S.C § 101

Issued patents are presumed eligible under 35 U.S.C. § 101. *Cellspin Soft, Inc. v. Fitbit, Inc*., 927 F.3d 1306, 1319 (Fed. Cir. 2019). That presumption can only be rebutted by clear and convincing evidence. *See id.* Here, the Asserted Claims of the ’836, ’379, and ’444 Patents are patent eligible under § 101 because: (1) they are not directed to a natural phenomenon or abstract idea under the first step of the patent eligibility test set forth in *Mayo Collaborative Servs. v. Prometheus Labs., Inc*., 566 U.S. 66 (2012) and *Alice Corp. Pty. Ltd. v. CLS Bank Int’l,* 573 U.S. 208 (2014); and (2) in any event, each Asserted Claim of the ’836, ’379, and ’444 Patents, considered both individually and as an ordered combination, contains an “inventive concept” under the second step of the *Mayo*/*Alice* patent eligibility test. *Alice*, 573 U.S. at 217.

Respondents' contentions that the Asserted Claims of the '836, '379, and '444 Patents misapply the *Alice* two-step framework and fail to account for precedent against finding methods of treating patent ineligible. Respondents' contentions thus reach wrong conclusions with respect to § 101. Specifically, for the reasons outlined below, Respondents' contentions fail to provide clear and convincing evidence that any of the Asserted Claims of the '836, '379, and '444 Patents are patent ineligible—*i.e.*, directed to a natural phenomenon or an abstract idea, or lacking an "inventive concept." Respondents try to turn methods of treating and apparatuses that carries out the methods into patent-ineligible subject matter, even though the Federal Circuit has made clear "method of treatment claims are patent eligible." *Illumina, Inc. v. Ariosa Diagnostics, Inc.*, 967 F.3d 1319, 1325 (Fed. Cir. 2020); *see also Nat. Alternatives Int'l, Inc. v. Creative Compounds, LLC*, 918 F.3d 1338, 1344 (Fed. Cir. 2019) ("These are treatment claims and as such they are patent eligible.").

A. The Claims Are Eligible At *Alice* Step One

The Asserted Claims of the '836, '379, and '444 Patents are not directed to a natural phenomenon or abstract idea. *Alice* step one requires determining "whether the claims at issue are directed to one of those patent-ineligible concepts." *Alice*, 573 U.S. at 217 (emphasis added); *see also Enfish, LLC v. Microsoft Corp.*, 822 F.3d 1327, 1335 (Fed. Cir. 2016). The Supreme Court has cautioned that "too broad an interpretation of" ineligible subject matter "could eviscerate patent law" because "all inventions at some level embody, use, reflect, rest upon, or apply laws of nature, natural phenomena, or abstract ideas." *Mayo*, 566 U.S. at 71. Accordingly, at *Alice* step one, "it is not enough to merely identify a patent-ineligible concept underlying the claim; we must determine whether that patent-ineligible concept is what the claim is 'directed to.'" *Rapid Litig. Mgmt. Ltd. v. CellzDirect, Inc.*, 827 F.3d 1042, 1050 (Fed. Cir. 2016). If the claims are not directed

[redacted]

to a patent ineligible concept at *Alice* step one, the Court need not address step two of the inquiry. *See Enfish*, 822 F.3d at 1339.

Respondents characterize the purported natural phenomenon or abstract idea to which the claims are directed as follows:

> [T]he Asserted Claims in the '836, '379, and '444 Patents are directed to the natural phenomena (and observation of the natural phenomena) of RF current flow when applied to dermal tissue. These claims are also directed to the abstract idea of providing enough energy to achieve a desired effect around the needles, but not enough energy to cause coagulation between the needles. This is the case, regardless of whether the claimed effect is to avoid unduly damage tissue ('836 Patent), to avoid overlapping energy fields ('379) and to cause energy to be substantially applied to body segments around each electrode ('444 Patents). These claims impermissibly attempt to monopolize an abstract result without reciting limitations that would be needed to produce the desired result..

Jul. 10, 2023 Respondents' Preliminary Invalidity Contentions at 186. The claims, however, are not directed to an "natural phenomena" or "observation of … natural phenomena," *id.*; they are directed to methods of treatment and apparatuses for applying that treatment. In other words, "[t]he claims not only embody th[e] discovery" Respondents identify about how "RF current flow when applied to dermal tissue" can produce particular effects, "they [also] require that an infringer actually administer the [RF microneedling treatment] claimed in the manner claimed, altering the [dermal tissue's] physiology to provide the described benefits." *Nat. Alternatives Int'l, Inc.*, 918 F.3d at 1344. "Unlike the claims held ineligible in *Mayo*, which only required the observation of a natural law, the [claims here] require[] a [treatment professional] to affirmatively administer [the claimed RF microneedling treatment] to alter a patient's condition from their natural state." *Id.* at 1344-45. The claims here are directed to "application" of Dr. Na's discovery, *i.e.*, "actual action to be taken"—not merely a diagnostic to identify a natural phenomenon. *Id.* at 1345. "Unlike the claims in *Mayo*," the claims "at issue are treatment claims" (or apparatus for treatment claims) that

"require specific steps be taken in order to bring about a change in a subject" and thus "are doing more than simply reciting a natural law." *Id.*

The claims also are not "directed to the abstract idea of providing enough energy to achieve a desired effect around the needles, but not enough energy to cause coagulation between the needles or unduly damage tissue ('836 Patent) or to avoid overlapping energy fields ('379 and '444 Patents) . . . without reciting limitations that would be needed to produce the desired result." Jul. 10, 2023 Invalidity Contentions at 196-97. The claims are instead directed to specific application of RF microneedling treatment to achieve a specific outcome in the skin of the patients receiving the RF microneedling treatment. Such claims are patent eligible. Indeed, Federal Circuit "precedent leaves no room for a different outcome." *Endo Pharms. Inc. v. Teva Pharms. USA, Inc.*, 919 F.3d 1347, 1355 (Fed. Cir. 2019) (holding method of treatment claims eligible where the treatment merely comprised "providing a solid oral controlled release dosage form," "measuring a creatine clearance rate" and "orally administering . . a lower dosage form to provide pain relief; wherein [this resulted in] average AUC of oxymorphone over a 12-period [being] less than [a certain amount]"). "The fact that the human body responds to the treatment through biochemical processes does not convert the claim into an ineligible one." *Nat. Alternatives Int'l, Inc.*, 918 F.3d at 1345.

Each of the '836, '379, and '444 Patents contain method of treatment claims. *See, e.g.*, '836 Patent at cl. 14 ("A method of treating skin"); '379 Patent at cl. 10 ("A method treating a mammalian body"); '444 Patent at cl. 10 ("A method of treating a mammalian body"). Instead of being "directed to" "natural phenomena (and observation of the natural phenomena) of RF current flow when applied to dermal tissue" (Jul. 10, 2023 Invalidity Contentions at 188), the claims are directed towards particular methods of treatment. For example, claim 14 of the '836 Patent

requires inserting a plurality of electrodes into a section of skin to be treated where the electrodes are bipolar and applying an Alternating Current (AC) Radio Frequency (RF) signal to the plurality of electrodes configured to cause coagulation around each electrode rather than coagulating between the electrodes. Similarly, claim 10 of the '379 Patent requires inserting a plurality of electrodes into a body segment to be treated where the electrodes are bipolar and applying an RF signal with oscillating current to the plurality of electrodes to apply energy to body segments around each electrode rather than to body segments between the electrodes. Finally, claim 10 of the '444 Patent requires deploying a plurality of electrodes into a body segment to be treated where the nearest electrodes having opposite polarities and applying an RF signal with oscillating current to the plurality of electrodes to cause energy to be substantially applied to body segments around each electrode.

These are treatment steps, which the Federal Circuit routinely finds patent eligible as not being directed to ineligible subject matter, such as a natural phenomenon. *See, e.g.*, *Endo Pharms. Inc. v. Teva Pharms. USA, Inc.*, 919 F.3d 1347, 1356 (Fed. Cir. 2019) (upholding method of treatment that provided an oral controlled release dosage, measured a creatine clearance, and administering a lower dosage in certain situations); *Nat. Alternatives*, 918 F.3d 1346 (upholding a method of treatment that provided "effective" amount of beta-alanine to have desired effect); *Vanda Pharms. Inc. v. W. Ward Pharms. Int'l Ltd.*, 887 F.3d 1117, 1134 (Fed. Cir. 2018) (upholding a method of treatment that treated certain patients using iloperidone at a certain dose to achieve a desired outcome). The method claims of the '836, '379, and '444 Patents are doing more than simply reciting a natural phenomenon. Even though, the method claims of the '836, '379, and '444 Patent may utilize a natural phenomenon, such as RF current flow when applied to dermal tissue, this is not sufficient to establish that they are directed to that natural law. *Nat. Alternatives*,

918 F.3d 1345. The Asserted Claims are "directed to 'a specific method of treatment for specific patients using a specific compound at specific dose to achieve a specific outcome." *Vanda*, 867 F.3d at 1136; *See also Boehringer Ingelheim Pharms., Inc. v. Mylan Pharms., Inc.* (Fed. Cir. Mar. 16, 2020) ("Because we hold that the claims are directed to a method of treatment at step one, we conclude the claims are patent eligible and need not reach step two.").

The result of these claims is not simply an observation, detection, or recitation of a natural phenomenon. These claims are directed to a new and useful method of treating skin or a mammalian body. These claims specify something to be administered—a Alternating Current (AC) Radio Frequency (RF) signal ('836 Patent at cl. 14); a RF signal with oscillating current ('379 Patent at cl. 10; '444 Patent at cl. 10). These claims specify an amount limitation—"configured to cause coagulation around each electrode rather than coagulating between the electrodes" ('836 Patent at cl. 1); "to apply energy to body segments around each electrode rather than to body segments between the electrodes" ('379 Patent at cl. 10); "to cause energy to be substantially applied to the body segments around each electrode" ('444 Patent at cl. 10).

The "natural ability of the subject matter to *undergo* [a] process does not make the claim 'directed to' that natural ability." *CellzDirect*, 827 F.3d at 1049 (emphasis in original). Otherwise, claims directed to actually "treating cancer with chemotherapy (as directed to cancer cells' inability to survive chemotherapy)" or "treating headaches with aspirin (as directed to the human body's natural response to aspirin)" would be patent ineligible. *Id.* Thus the method claims of the '836, '379, and '444 Patent are not directed to a natural phenomenon or observation of one.

Complainant has not argued that method of treatment patents are patent eligible *per se* as Respondents content. Jul. 10, 2023 Invalidity Contentions at 193. Rather, like other method of treatment claims the Federal Circuit routinely finds patent eligible as not being directed to

ineligible subject matter, the claims here are directed to specific applications of RF microneedling treatment to achieve a specific outcome in the skin of the patients receiving the RF microneedling treatment.

Realizing the claims of the ’836, ’379, and ’444 Patent are not directed to a natural phenomenon or observation of one, Respondents try to assert the method claims of the ’836, ’379, and ’444 Patent are directed to “the abstract idea of providing enough energy to achieve a desired effect around the needles, but not enough energy to cause coagulation between the needles or unduly damage tissue (’836 Patent) or to avoid overlapping energy fields (‘379 and ‘444 Patents).” Jul. 10, 2023 Invalidity Contentions at 196-97. Respondents are wrong. Respondents choose not to discuss the claim language itself, but instead “describe the claims at . . . a high level of abstraction and untethered from the language of the claims.” *Enfish*, 822 F.3d at 1337. At some level all inventions embody, use, reflect, rest upon, or apply laws of nature, natural phenomena, or abstract ideas. *Alice*, 573 U.S. at 217. An invention is not rendered patent ineligible simply because it involves an abstract concept. *Id.* This would all but ensures that the exceptions to § 101 swallow the rule. *Id.* Respondents try to twist claims clearly in the physical realm to the abstract realm, which is improper. Respondents’ rule would sweep all claims, including those involving natural law and natural phenomenon, into being an abstract idea. This cannot be correct as there would be no need for three exceptions to § 101 as outlined by the Supreme Court. *Alice*, 573 U.S. at 217. There instead would only be one—the abstract idea.

The apparatus claims of the ’836, ’379, and ’444 Patents, claim 1 and their dependent claims in each patent, are likewise not directed to an abstract idea. The claims specify a particular configuration of structures and their abilities in order to treat skin or a mammalian body, including the claimed methods of each patent. This is sufficient for the apparatus claims of the ’836, ’379,

and ’444 Patent to not be directed to an abstract idea. *See, e.g., Thales Visionix Inc. v. U.S.*, 850 F.3d 1343, 1349 (Fed. Cir. 2017) (upholding claims that “specif[ied] a particular configuration of inertial sensors . . . in order to more accurately calculate the position and orientation of an object on a moving platform”).

Respondents incorrectly assert that all of the Asserted Claims of the ’836, ’379, and ’444 Patents claim a result without reciting limitations that would be needed to produce the desired result. Jul. 10, 2023 Invalidity Contentions at 187-192. The Asserted Claims of the ’836, ’379, and ’444 Patents do provide sufficient limitations to produce the intended result. They are limited to certain means. For example, claim 1 of the ’836 Patent includes a plurality of electrodes being bipolar and configured to be insertable into a body segment to be treated and a radio frequency generation module electrically coupled to the plurality of electrodes and configured to provide RF signal with oscillating current to the plurality of electrodes to apply energy to body segments around each electrode rather to body segments between electrodes. The other Asserted Claims of the ’836, ’379, and ’444 Patents include similar features. The dependent claims of the ’836, ’379, and ’444 Patents provide additional means to carry out the invention, such as length of the electrode (’836 Patent at cl. 4) or type of electrode and their diameter (’836 Patent at cl. 9).

Also, the Asserted Claims of the ’836, ’379, and ’444 Patents include limitations about the impact or effect of RF signal on skin or a mammalian body delivered by a plurality of electrodes from a radio frequency generation module. *See, e.g.*, ’836 Patent at cls. 1, 14; ’379 Patent at cls. 1, 10; ’444 Patents at cls. 1, 10. This is akin to including limitations about the impact or effect of a pharmaceutical or compound, such as an effective amount, on an organism, including a human. Such claims have not been found patent ineligible. *See, e.g.*, *Nat. Alternatives*, 918 F.3d 1343 (upholding a method of treatment that included limitations of “providing an amount of beta-alanine

to blood or blood plasma effective to increase beta-alanylhistidine dipeptide synthesis in the human tissue" and "exposing the tissue to the blood or blood plasma, whereby the concentration of beta-alanylhistidine is increased in the human tissue"). And the dependent claims add even more specificity. Those claims do not need to recite every single variable that would factor into an effective amount for an individual subject. Such variables may include height, age, weight, race, genetics, diet, exercise, etc. If Respondents position was correct, many methods of treatment claims, and certainly those claiming administering an effective amount of a substance to treat an ailment, would be considered invalid under § 101. This result would be contrary to Federal Circuit law where method of treatment claims are patent eligible. *Endo*, 919 F.3d at 1356; *Nat. Alternatives*, 918 F.3d 1346; *Vanda Pharms.*, 887 F.3d at 1134.

B. The Claims Are Eligible At *Alice* Step Two

There is no need to reach *Alice* step two because the claims are not directed to an abstract idea at *Alice* step one, just as in *Endo*, *Natural Alternatives*, and *Vanda*. Regardless, each of the Asserted Claims of the '836, '379, and '444 Patents include "inventive concepts" which render them patent eligible, even if the Court were to find the claims directed to a natural phenomenon or abstract idea (they are not). This is so for a variety of reasons.

First, the Asserted Claims of the '836, '379, and '444 Patents contain "an 'inventive concept' sufficient to 'transform'" any alleged natural phenomenon or abstract idea "into a patent-eligible application." *Alice*, 573 U.S. at 221-22. Prior skin or mammalian body treatment included the following with their associated drawbacks:

- massaging with a nutritious substance – does not last for long and rarely shows improvement instantaneously ('836 Patent at 1:53-57);
- using a syringe to inject serum into the skin – costly and causes side effects based on individual skin characteristics that result adversely affecting the skin (*id.* at 1:58-61);

- delivering high frequency energy indirectly to the dermis via the skin surface - does not effectively transmit high frequency energy to the dermis via the skin surface even at a high energy signal and costly because patients may need multiple treatments to obtain measurable results (*id.* at 1:62-67);
- using a single needle – may not be sufficient for treatment (*id.* at 2:1-7); and
- using high frequency into the skin dermis reticular layer – side effects, not limited to burning both epidermis and dermis between the needles, which may form a scar and not able to maintain finite control (*id.* at 7-18).

The Asserted Claims of the ’836, ’379, and ’444 Patents describe methods and apparatuses with structures and their abilities in order to treat skin or a mammalian body to address those problems. The claims are limited to the claimed configurations and steps in a particular field to address a particular set of technological problems, and the Asserted Claims of the ’836, ’379, and ’444 Patents are thus patent eligible even assuming the inquiry gets to step two.

Second, the Asserted Claims of the ’836, ’379, and ’444 Patents do not merely “state the [natural phenomenon or abstract idea] while adding the words ‘apply it.’” *Mayo*, 566 U.S. at 72. For example, claim 1 of the ’836 Patent requires “a plurality of electrodes, the electrodes being bipolar and configured to be insertable into skin to be treated” and “a radio frequency (RF) generation module” that is “electrically coupled to the plurality of electrodes and configured to provide an Alternating Current (AC) RF signal to the plurality of electrodes configured to cause coagulation around each electrode rather than coagulating between the electrodes.” Similarly, claim 1 of the ’379 Patent requires “a plurality of electrodes, the electrodes being bipolar and configured to be insertable into a body segment to be treated” and “a radio frequency (RF) generation module” that is “electrically coupled to the plurality of electrodes and configured to provide an RF signal with oscillating current to the plurality of electrodes to apply energy to body segments around each electrode rather than to body segments between the electrodes.” Finally, claim 1 of the ’444 Patent requires “a plurality of electrodes, the nearest electrodes having opposite polarities and the electrodes configured to be deployable into a body segment to be treated” and “a radio frequency (RF)

generation module" that is "electrically coupled to the plurality of electrodes and configured to provide an RF signal with oscillating current to the plurality of electrodes that causes energy to be substantially applied to body segments around each electrode." The method of treatment claims of the '836, '379, and '444 Patents require similar claim limitations as the apparatus claims, which again is more than just adding the words "apply it." *See, e.g.*, '836 Patent at cl. 14; '379 Patent at cl. 10; '444 Patent at cl. 10.

Third, The Federal Circuit has "explained that the second step of the *Alice*/*Mayo* test is satisfied when the claim limitations 'involve more than performance of well-understood, routine, [and] conventional activities previously known to the industry.'" *Aatrix Software, Inc. v. Green Shades Software, Inc.*, 882 F.3d 1121, 1128 (Fed. Cir. 2018). Here, the Asserted Claims of the '836, '379, and '444 Patents recite limitations and combinations that were not "well-understood, routine, and conventional activities previously known" to the skin or mammalian body treatment industry. In each Asserted Claim of the '836, '379, and '444 Patents, the claimed limitations in combination result in a particular skin or mammalian body treatment apparatus or method that is implemented in an unconventional and non-trivial manner, which required new and technologically improved devices as described in the '836, '379, and '444 Patents. The claimed elements are not merely generic components but instead require a combination and certain use that had never been done before. Each claim combines the claimed elements in an unconventional way to provide specific technological solutions to technology specific problems related to treating skin or a mammalian body.

Fourth, the fact that the claimed inventions recite improvements in skin or mammalian treatment methods and apparatuses likewise render them patent eligible. *See Aatrix*, 882 F.3d at 1127 ("We have repeatedly held that inventions which are directed to improvements in the

functioning and operation of the computer are patent eligible."); *EcoServices, LLC v. Certified Aviation Servs., LLC*, 830 F. App'x 634, 642 (Fed. Cir. 2020) (finding patent eligible claims that "achieve a level of automation that provides an improvement over the prior art human-operated washing systems"); *TecSec, Inc. v. Adobe Inc.*, 978 F.3d 1278, 1293-94 (Fed. Cir. 2020) (distinguishing cases where claims are directed to a "specific technique" to "solve a technological problem," and those cases that "merely claimed use of conventional" technology to "carry out the abstract . . . idea").

Respondents argue that certain claim limitation are "no more than conventional pre- and post-solution activity" because they are disclosed in the prior art. May 24, 2023 Invalidity Contentions at 171. Respondents are wrong on at least two grounds. First, the prior art does not disclose all of the claim limitations of the Asserted Patents. Section VI. Second, Respondents are legally wrong. A claim limitation is not well-understood, routine, and conventional "merely because it is disclosed in a prior art reference." *Exergen Corp. v. Kaz USA, Inc.*, 725 F. App'x 959, 965 (Fed. Cir. 2018). Serendia may further rely on expert testimony to address Respondents' ineligibility arguments at both steps of the *Alice* analysis and in particular at step two, which involves factual determinations.

IX. INVENTORSHIP

The burden of proving that an individual should have been added as an inventor to an issued patent is a "heavy one." *Hip, Inc. v. Hormel Foods Corp.*, 66 F.4th 1346, 1350 (Fed. Cir. 2023) (quoting *Pannu v. Iolab Corp.*, 155 F.3d 1344, 1349 (Fed. Cir. 1998)). "The issuance of a patent creates a presumption that the named inventors are the true and only inventors." *Gen. Elec. Co. v. Wilkins*, 750 F.3d 1324, 1329 (Fed. Cir. 2014). Thus, an alleged joint inventor must prove a claim of joint inventorship by "clear and convincing evidence."

To qualify as joint inventor, a person must make a significant contribution to the invention as claimed. *Fina Oil & Chem. Co. v. Ewen*, 123 F.3d 1466, 1473 (Fed. Cir. 1997). The joint inventorship may be framed in a three-part test that requires a joint inventor: (1) to contribute in some significant manner to the conception or reduction to practice of the invention, (2) to make a contribution to the claimed invention that is not insignificant in quality, when that contribution is measured against the dimension of the full invention, and (3) do more than merely explain to the real inventors well-known concepts and/or the current state of the art. *Pannu*, 155 F.3d at 1351 (Fed. Cir. 1998) (citing *Fina Oil & Chem. Co. v. Ewen*, 123 F.3d 1466, 1473 (Fed. Cir. 1997)).

Despite bearing this heavy burden, Respondents have not put forth a *prima facie* case that either Yongham Kim or Jeong Gu Gwak[38] are a joint inventor of any claim of the Asserted Patents.

A. Yonham Kim Is Not a Joint Inventor of Any Claim of the '836, '379, '444, '536, '774, and '812 Patents

Respondents allege that Mr. Kim is a co-inventor of at least one claim in each of the Asserted Patents. Jul. 10, 2023 Invalidity Contentions at 199-204. These contentions fall short of meeting Respondents "heavy burden" to show Mr. Kim should be added as an inventor to any of the Asserted Patents.

[38]

[redacted]

[redacted]

[redacted]

[39] [redacted]

[redacted]

[redacted]

[redacted]

[redacted]

---

40 [redacted]

B. Jeong Gu Gwak Is Not a Joint Inventor of Any Claim of the ’836, ’379, ’444, ’536, ’774, and ’812 Patents

.

[41] round, which is unexplained in its invalidity contentions, Complainant the right to respond.

[redacted]

X. INEQUITABLE CONDUCT

To establish inequitable conduct, a party must show by clear and convincing evidence that the patentee (1) misrepresented or withheld material information from the USPTO, and (2) did so with specific intent to mislead or deceive the USPTO. *See Intellect Wireless, Inc. v. HTC Corp.*, 732 F.3d 1339, 1341-42 (Fed. Cir. 2013). Specifically for inequitable conduct based on withheld material information, a party must show by clear and convincing evidence that the patentee (1)

"knew of the reference;" (2) "knew that it was material;" and (3) "made a deliberate decision to withhold it." *See Therasense, Inc. v. Becton, Dickinson & Co.*, 649 F.3d 1276, 1290 (Fed. Cir. 2011) (en banc). "Proving that the [patentee] knew of a reference, should have known of its materiality, and decided not to submit it to the [US]PTO does not prove specific intent to deceive." *Id.* If the party meets its burden to establish inequitable conduct, then the court must weigh the equities to determine whether the applicant's conduct before the USPTO warrants rendering the entire patent unenforceable. *Id.* at 1287.

"Materiality and intent must be separately established." *In re Rosuvastatin Calcium Patent Litig.*, 703 F.3d 511, 519 (Fed. Cir. 2012). The materiality required to establish inequitable conduct is but-for materiality. *Therasense*, 649 F.3d at 1291. But-for materiality requires that the USPTO would not have allowed a claim had it been aware of the misrepresented or withheld information. *See id.* A withheld otherwise material reference cannot be but-for material if it is merely cumulative to, or less relevant than, information already considered by the examiner. *Larson Mfg. Co. of South Dakota, Inc. v. Aluminart Products Ltd.*, 559 F.3d 1317, 1327 (Fed. Cir. 2009); *see also Rothman v. Target Corp.*, 556 F.3d 1310, 1327 (Fed. Cir. 2009); *Eisai Co. Ltd. v. Dr. Reddy's Laboratories, Ltd.*, 533 F.3d 1353, 1361 (Fed. Cir. 2008). An exception for but-for materiality is when a patentee engaged in affirmative acts of egregious misconduct, such as the filing of an unmistakably false affidavit. *Therasense*, 649 F.3d at 1292.

A finding that the misrepresentation or omission amounts to gross negligence or negligence under a "should have known" standard does not satisfy the specific intent requirement. *Kingsdown Med. Consultants, Ltd. v. Hollister Inc.*, 863 F.2d 867, 876 (Fed. Cir. 1988). The specific intent to deceive must be "the single most reasonable inference able to be drawn from the evidence." *Star Sci., Inc. v. R.J. Reynolds Tobacco Co.*, 537 F.3d 1357, 1366 (Fed. Cir. 2008). Indeed, the

[redacted]

evidence "must be sufficient to require a finding of deceitful intent in the light of all the circumstances." *Kingsdown*, 863 F.2d at 873. Hence, when there are multiple reasonable inferences that may be drawn, intent to deceive cannot be found. *See Scanner Techs. Corp. v. ICOS Vision Sys. Corp.*, 528 F.3d 1365, 1376 (Fed. Cir. 2008).

Unclean hands is reserved for "particularly egregious misconduct, including perjury, the manufacture of false evidence, and the suppression of evidence," performed with "deliberately planned and carefully executed scheme[s] to defraud" both the USPTO and the courts. *Therasense*, 649 F.3d at 1287 (alteration in original) (internal citations omitted). The bad conduct must involve "fraud, unconscionability or bad faith toward the party proceeded against," and must "pertain to the subject matter involved and affect the equitable relations between the litigants." *Int'l Union, Allied Indus. Workers of Am., v. Local Union No. 589, Allied Indus. Workers of Am.*, 693 F.2d 666, 672 (7th Cir. 1982); *Erfindergemeinschaft UroPep GbR v. Eli Lilly & Co.*, 2017 WL 275465, at *7-8 (E.D. Tex. 2017) (denying leave to amend to add defense of unclean hands); *see also Maui Jim, Inc. v. SmartBuy Guru Enters.*, 386 F. Supp. 3d 926, 956-57 (N.D. Ill. 2019), *recons. denied,* 459 F. Supp. 3d 1058 (N.D. Ill. 2020). The misconduct must also have immediate and necessary relation to the equity sought. *Keystone Driller Co. v. Gen. Excavator Co.*, 290 U.S. 240, 245 (1933). Like inequitable, unclean hands must be shown by clear and convincing evidence. *In re Omeprazole Pat. Litig.*, 483 F.3d 1364, 1374 (Fed. Cir. 2007); *Aptix Corp. v. Quickturn Design Sys., Inc.,* 269 F.3d 1369, 1374 (Fed. Cir. 2001).

Respondents allege the Asserted Patents are unenforceable for inequitable conduct and the '536, '774, and '812 Patents additionally for unclean hands for reasons consistent with Respondents' response to the complaint. Jul. 10, 2023 Invalidity Contentions at 205-30; *see also* Response of Sung Hwan E&B Co. Ltd to the Complaint and Notice of Investigation at 44-61.

Despite having the high burden of clear and convincing evidence, Respondents have not put forth a *prima facie* case that anyone substantively involved in prosecution of any of the Asserted Patents conducted inequitable conduct with respect to any of the Asserted Patents or engaged in egregious misconduct with a deliberately planned and carefully executed scheme to defraud the USPTO and the courts[42] as shown in Complainant's response to Respondents' Interrogatory No. 51, which is, and any supplements to it, are incorporated by reference.

[42] Respondents fail to show the alleged bad conduct involved fraud, unconscionability or bad faith toward the party proceeded against and pertains to the subject matter involved and affect the equitable relations between the litigants.

Dated: July 24, 2023

By: */s/ Kevin C. Wheeler*

Kevin C. Wheeler
Cecilia Sanabria
Michael A. David
LATHAM & WATKINS LLP
555 11th St. NW, Suite 1000
Washington, D.C. 20004-1304
T: (202) 637-2200

Charles H. Sanders
LATHAM & WATKINS LLP
200 Clarendon St.
Boston, MA 02116
T: (617) 948-6000

Email: serendiaitc.lwteam@lw.com

Counsel for Complainant Serendia, LLC

CERTIFICATE OF SERVICE

It is hereby certified that copies of the foregoing **COMPLAINANT'S JULY 24, 2023 SUPPLEMENTAL VALIDITY CONTENTIONS** were served on July 24, 2023 as follows:

Aaron D. Rauh Office of Unfair Import Investigations U.S. International Trade 401 500 E Street, SW, Room 317 Washington, DC 20436	By Email and Box: Aaron.Rauh@usitc.gov
Guy Yonay PEARL COHEN ZEDEK LATZER BARATZ LLP 7 Times Square, 19th Fl. New York, NY 10036 *Counsel for Respondents EndyMed Medical, Ltd. and EndyMed Medical, Inc.*	By Email: EndyMed@PearlCohen.com
Thomas E. Garten COVINGTON & BURLING LLP One CityCenter, 850 Tenth Street, N.W. Washington, DC 20001 *Counsel for Respondents Ilooda, Co., Ltd. and Cutera, Inc.*	By Email: COV-Ilooda-ITC@cov.com
David M. Airan LEYDIG, VOIT & MAYER, LTD. Two Prudential Plaza 180 N. Stetson Ave, Suite 4900 Chicago, IL 60601-6745 *Counsel for Respondent Jeisys Medical Inc. and Cynosure, LLC*	By Email: Leydig-Jeisys-ITC@leydig.com Jeisys-337@bartkowskipllc.com

Richard V. Wells BAKER & MCKENZIE, LLP 815 Connecticut Ave. NW Washington, D.C. 20006 *Counsel for Respondents Lutronic Corporation; Lutronic Aesthetics, Inc. aka Lutronic, Inc.; Lutronic, LLC*	By Email: HOU-Lutronic-ITC@bakermckenzie.com
Lesley McCall Grossberg Ice Miller LLP 1735 Market St., Suite 3900 Philadelphia, PA 19103 *Counsel for Respondents Rohrer Aesthetics, Inc. and Rohrer Aesthetics, LLC*	By Email: RohrerITC@icemiller.com
Ryan B. McCrum JONES DAY 901 Lakeside Avenue Cleveland, OH 44114-1190 *Counsel for Respondents Sung Hwan E&B Co., LTD. d/b/a SHEnB Co. LTD; Cartessa Aesthetics, LLC and Aesthetics Biomedical, Inc.*	By Email: SHEnB-ITC-JD@jonesday.com

/s/ E. Alexander Cruz
E. Alexander Cruz
LATHAM & WATKINS LLP