US 20090177580A1

(19) United States

(12) Patent Application Publication

Lowenthal et al.

(10) Pub. No.: US 2009/0177580 A1

(43) Pub. Date: Jul. 9, 2009

(54) COLLECTION OF ELECTRIC VEHICLE POWER CONSUMPTION TAX

(76) Inventors: **Richard W. Lowenthal**, Cupertino, CA (US); **Dave Baxter**, Monte Sereno, CA (US); **Harjinder Bhade**, San Jose, CA (US); **Praveen Mandal**, Los Altos Hills, CA (US)

Correspondence Address:
PILLSBURY WINTHROP SHAW PITTMAN LLP
P.O. BOX 10500
MCLEAN, VA 22102 (US)

(21) Appl. No.: **12/335,274**

(22) Filed: **Dec. 15, 2008**

Related U.S. Application Data

(60) Provisional application No. 61/081,333, filed on Jul. 16, 2008, provisional application No. 61/019,474, filed on Jan. 7, 2008.

Publication Classification

(51) **Int. Cl.**
G06Q 20/00 (2006.01)

(52) **U.S. Cl.** **705/39**

(57) **ABSTRACT**

A method of collecting electric vehicle power consumption tax for charge transferred between a local power source and an electric vehicle comprises: providing a network-controlled charge transfer device, charge transfer being controlled by a controller, the controller being connected to a network for communication to a server; requesting by an operator of the electric vehicle to the controller for charge transfer; relaying the request from the controller to the server; determining by the server, from geographical tax rate data and the geographical location of the network-controlled charge transfer device, an applicable tax rate on the charge transfer; enabling charge transfer by communicating from the server to the controller to activate the control device; monitoring the charge transfer using a current measuring device, the controller being configured to monitor the output from the current measuring device and to maintain a running total of charge transferred; detecting completion of the charge transfer; and on detecting completion, processing payment with said payment source, which may include deducting the cost of charge transfer from a subscriber account containing pre-transferred funds, and disabling charge transfer; wherein the request for payment includes the electric vehicle power consumption tax.

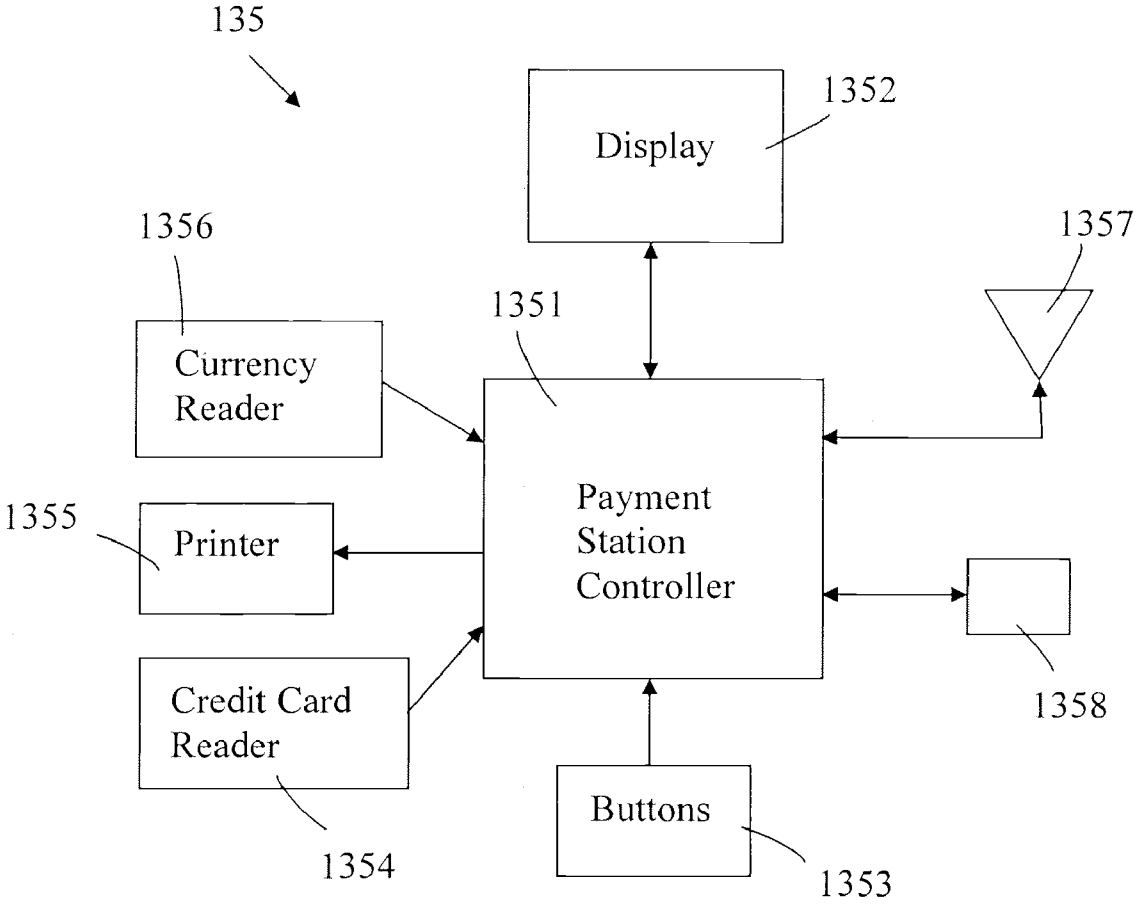

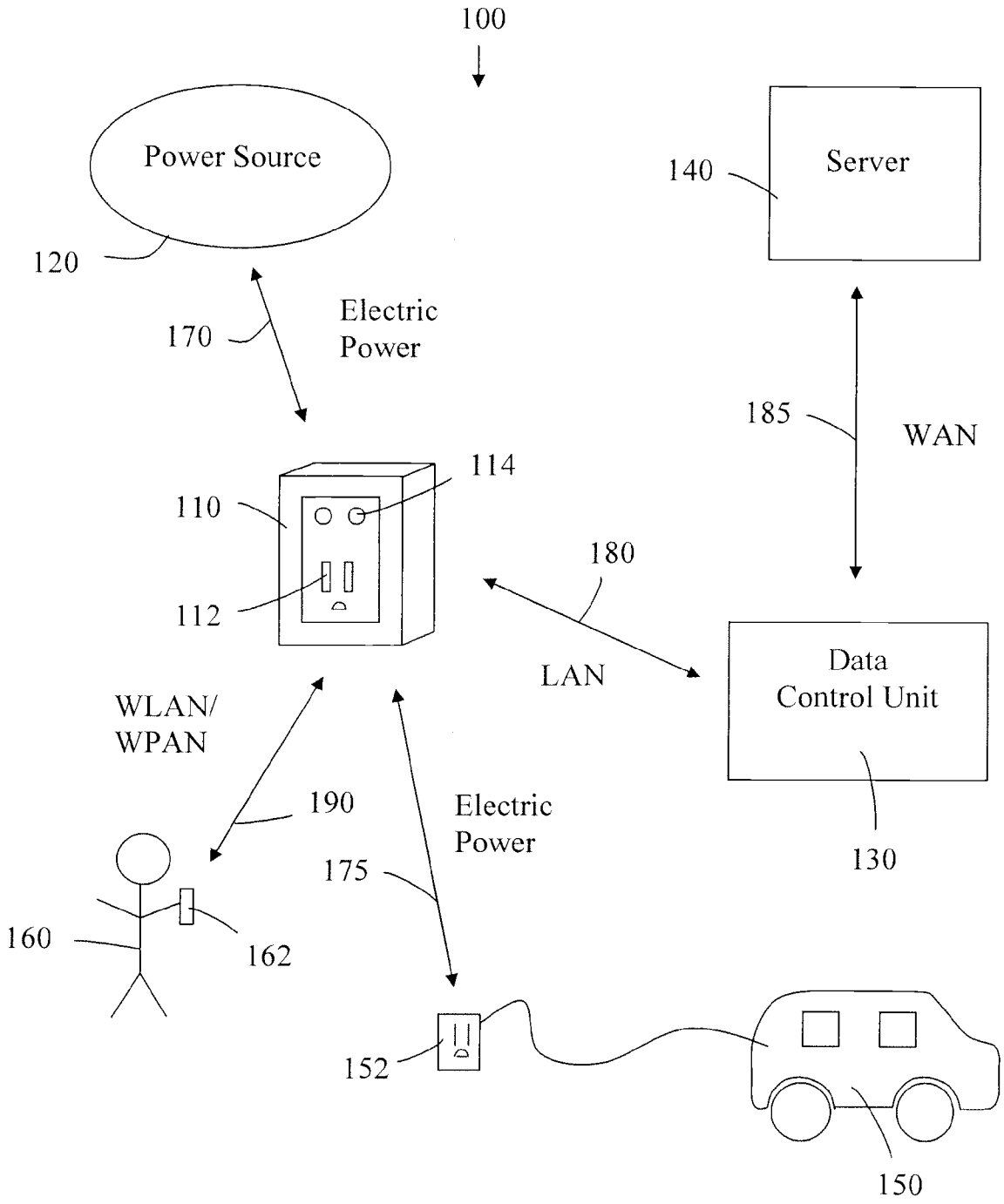
100
Power Source
120
Server
140
170
Electric
Power
185
WAN
114
110
112
180
LAN
Data
Control Unit
130
WLAN/
WPAN
190
Electric
Power
175
160
162
152
150

FIGURE 1

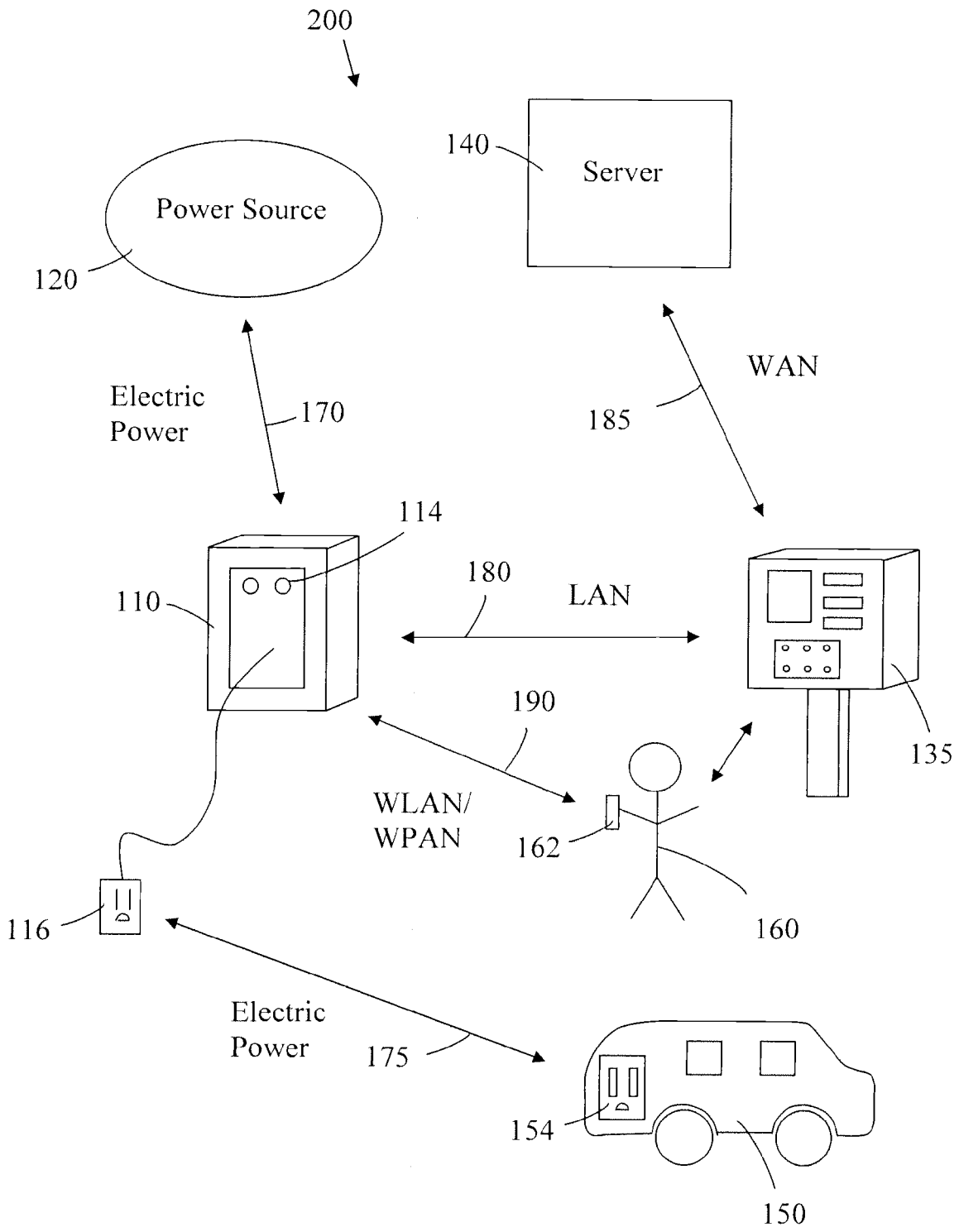
200
140
Server
Power Source
120
Electric
Power
170
185
WAN
114
110
180
LAN
190
135
WLAN/
WPAN
162
116
160
Electric
Power
175
154
150

FIGURE 2

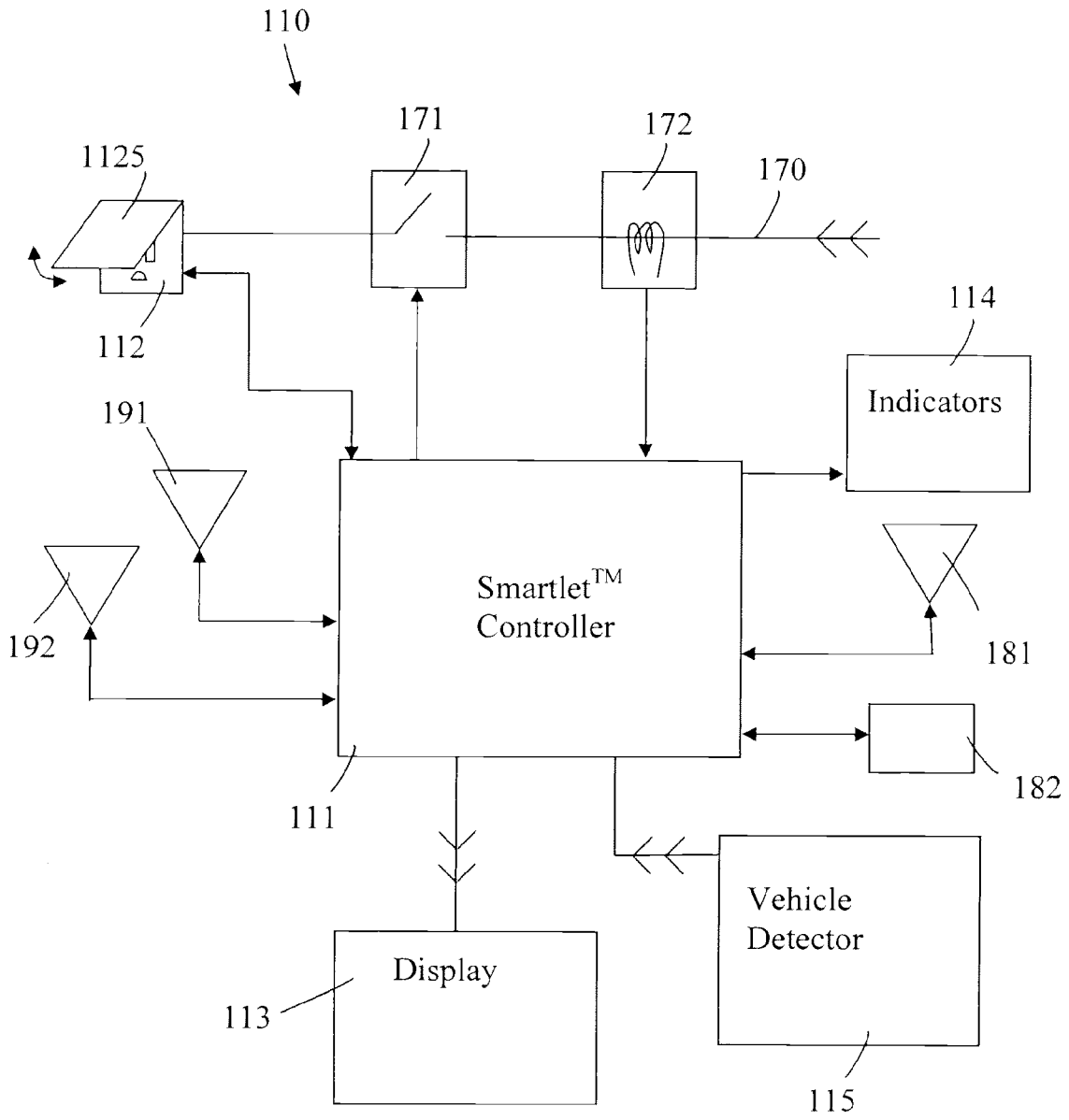
110
171
172
1125
170
112
114
Indicators
191
Smartlet™
Controller
192
181
182
111
Vehicle
Detector
Display
113
115

FIGURE 3

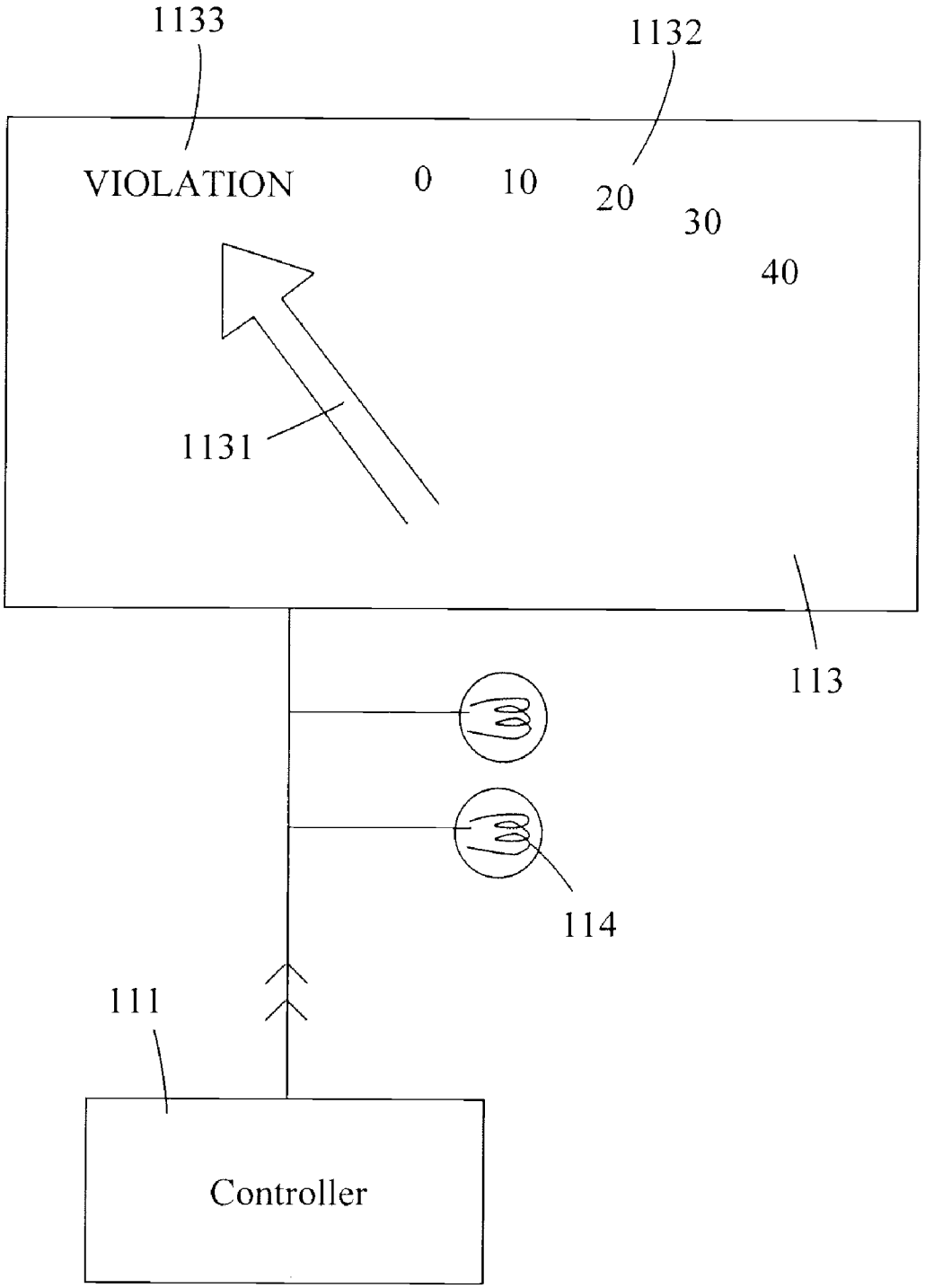

FIGURE 4

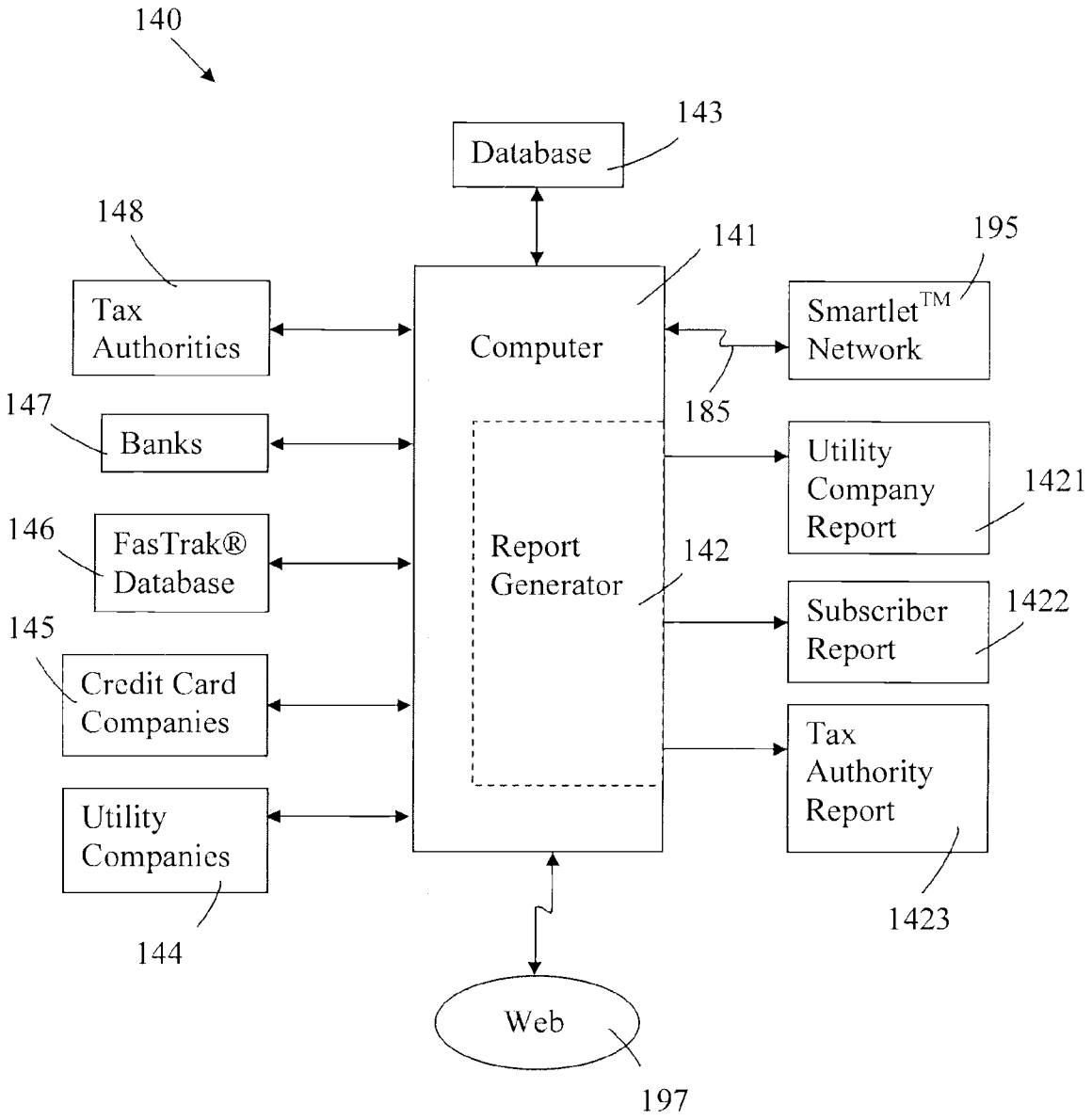
140
Database
143
148
141
195
Tax Authorities
Computer
Smartlet™ Network
147
185
Banks
Utility Company Report
1421
146
FasTrak® Database
Report Generator
142
Subscriber Report
1422
145
Credit Card Companies
Tax Authority Report
Utility Companies
1423
144
Web
197

FIGURE 5

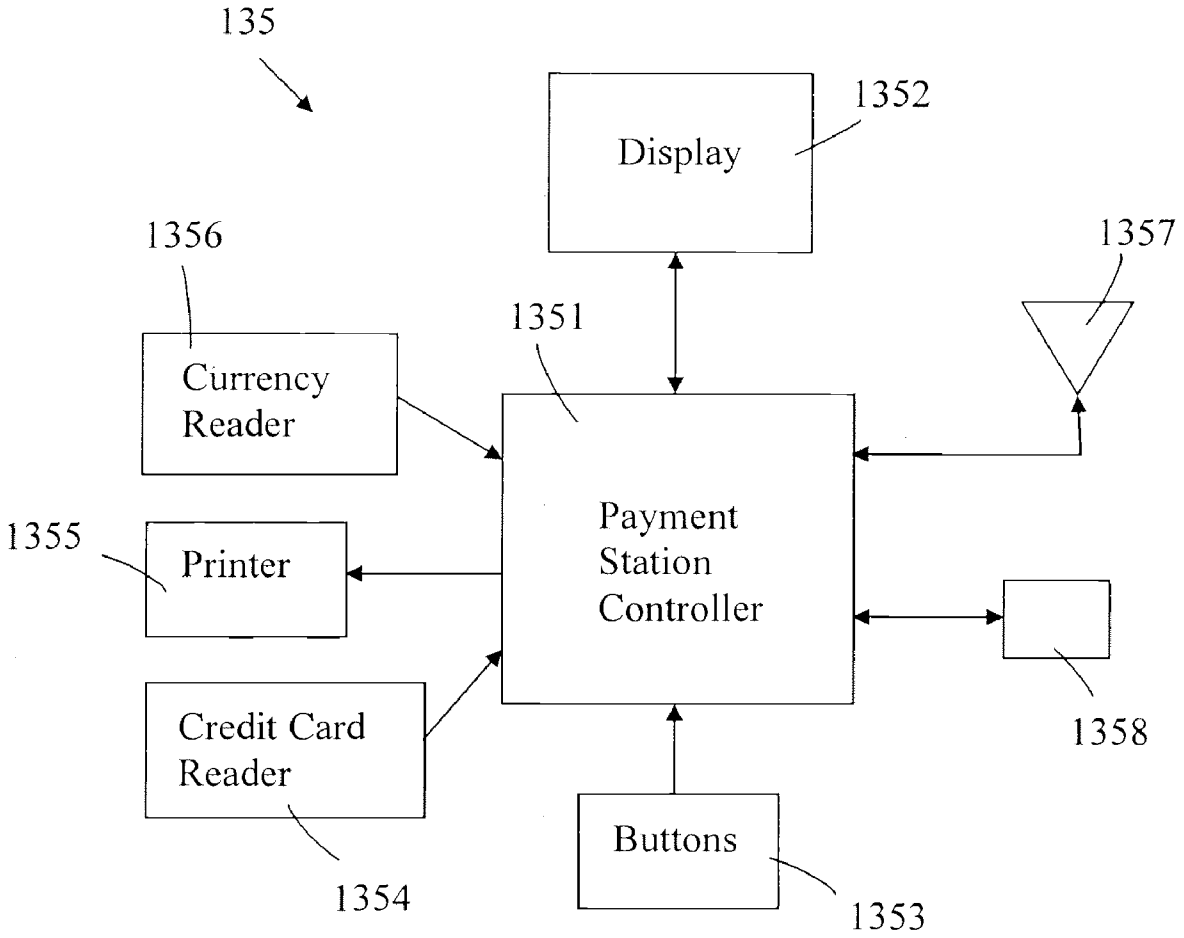
135
Display
1352
1356
1357
1351
Currency Reader
Payment Station Controller
1355
Printer
Credit Card Reader
1358
Buttons
1354
1353

FIGURE 6

COLLECTION OF ELECTRIC VEHICLE POWER CONSUMPTION TAX

CROSS-REFERENCE TO RELATED APPLICATIONS

[0001] This application claims the benefit of U.S. Provisional Application Ser. No. 61/081,333, filed Jul. 16, 2008 and U.S. Provisional Application Ser. No. 61/019,474, filed Jan. 7, 2008, which are expressly incorporated by reference herein.

BACKGROUND OF THE INVENTION

[0002] 1. Field of the Invention

[0003] This invention relates to the field of systems and methods for collecting an electricity consumption tax for electric vehicles.

[0004] 2. Description of the Related Art

[0005] The electric car, electric vehicle (EV) and battery electric vehicle are all used to describe automobiles powered by one or more electric motors utilizing energy stored in rechargeable batteries. The batteries are recharged by connecting to an electrical outlet. Efficient recharging of the batteries typically requires hours and is often done overnight or while the electric vehicle is parked for a significant time. The use of electric vehicles is limited by the sparse availability of recharging facilities. There is a need for more widespread recharging facilities. Furthermore, there is a need for more recharging facilities available where vehicles are parked for longer periods of time.

[0006] An important part of any consumer experience is the ease of acquiring a product—to recharge an electric vehicle this entails finding an available recharging facility, controlling the facility, and paying for the electricity consumed. There is a need for a communication network which facilitates finding the recharging facility, controlling the facility, and paying for the electricity consumed.

[0007] Electricity grids have periods of high demand from customers where the demand may approach or even exceed the electricity supply. Conversely, there are periods of low demand which coincide with high electricity production. Demand Response is a mechanism for reducing consumption of electricity during periods of high demand. For example, consumer services such as air conditioning and lighting may be reduced during periods of high demand according to a preplanned load prioritization scheme. Demand Response may also be used to increase demand at times of high electricity production. For example, the cost of electricity may be reduced during periods of low demand. Furthermore, some Demand Response systems encourage energy storage during periods of low demand, for release back into the electricity grid during periods of high demand. For example, battery electric vehicles may be charged during periods of low power demand and then release power back to the grid during periods of high demand.

[0008] Electric vehicles can be recharged from a local electricity grid. These vehicles can also be a source of electric power to be transferred to the local electricity grid. The transfer of electricity stored in electric vehicles to the local electric grid is referred to as vehicle-to-grid (V2G). V2G is particularly attractive for electric vehicles which have their own charging devices, such as battery electric vehicles with regenerative braking and plug-in hybrid vehicles. V2G is desirable for peak load leveling—helping to meet the demand for electricity when demand is at its highest. V2G is not widely available—it is principally being used in small pilot schemes. There is a need for more widely available Demand Response and V2G to assist with peak load leveling.

[0009] For Demand Response and V2G to be implemented effectively, real time communication of a need for power input into the local electricity grid is required. This communication from electric utility companies needs to reach recharging facility managers and electric vehicle owners and users. There is a need for an efficient communication network for managing peak load leveling using Demand Response and V2G.

[0010] Currently, a major source of revenue for building and maintaining highways for vehicular traffic is the gasoline tax. Should electric vehicles start to replace significant numbers of gasoline burning vehicles there will be a drop in tax revenues. To compensate for this loss in revenue, a tax on electricity consumption by electric vehicles may be imposed. Taxes may be imposed by federal, state and local authorities. There may even be taxes imposed by cities, counties and special districts. Consequently, the aggregate tax rate must be determined for the location of every electric vehicle recharging outlet. The electricity vendor or utility company will pay the tax collected to the appropriate authority, which is likely to be a state tax equalization board. In turn, the state board sends the money to all the taxing authorities. As a collector of taxes, an electricity vendor or utility company will be subject to reporting requirements to the state board. The most likely measurement of electricity consumption for taxation purposes is the kilowatt-hour (kwh). Such a tax system will require accurate measurement and reporting of electricity consumed by electric vehicles. Furthermore, since the location of the electric vehicle when electricity is purchased determines the aggregate tax, ready determination of the recharging location is required. Consequently, there will be a need for a system for determination and collection of taxes and for reporting consumption information.

[0011] Another alternative to the gasoline tax is a road user fee—for example, as proposed by the State of Oregon. See Oregon Department of Transportation Final Report on Oregon's Mileage Fee Concept and Road User Fee Pilot Program, November 2007, available at http://www.oregon.gov/ODOT/HWY/RUFPP/docs/RUFPP_finalreport.pdf (last visited Jun. 4, 2008). A road user fee requires a convenient means of collection—the Oregon solution is to collect the fee through one or more of: uploading mileage fee data wirelessly through electric utility meters for billing on periodic electric bills; cellular uploads of mileage fee data to centralized data and billing centers; and upload mileage fee data and collect the fee at the time of vehicle re-registration. Consequently, under a road use tax scheme, there is a need for automated tax collection systems.

[0012] As is clear from the above discussion, communication networks are an essential part of electric vehicle recharging systems that will meet the needs of electric vehicle operators, recharging facility operators, utility companies and tax authorities. A survey of communication networks, ranging from local area networks to wide area networks, is provided below. There is a focus on wireless networks. A variety of communication devices are also described.

[0013] A radio frequency identification transmitter, commonly referred to as an RFID transmitter, is used for short range communication with an RFID receiver. Typical ranges

are of the order of one meter to tens of meters. An example of an RFID transmitter is a remote keyless entry device.

[0014] A radio frequency identification transmitter, commonly referred to as an RFID transmitter, is used for short range communication with an RFID receiver. Typical ranges are of the order of one meter for communication with passive transmitters and hundreds of meters for communication with active transmitters. The longer range of the active transmitters is due to a power supply integrated into the transmitter. RFID transmitters store information which is broadcast over radio frequencies. An example of an RFID transmitter is a FasTrak® card, primarily used for payment of automotive tolls in California. Each FasTrak® card has a unique code which is associated with a debit account. Each time a FasTrak® card passes through a toll collection point, the unique code is transmitted by the card in response to being interrogated by an RFID transceiver. The code is detected by the RFID transceiver and the toll is debited from the user's account.

[0015] A wireless personal area network (WPAN) radio frequency transceiver is used for radio frequency short range (typically within 1-100 meters) communication between devices. An example of such a device is a Bluetooth® transceiver, where Bluetooth® refers to a particular standard and protocol primarily designed for short range radio frequency communications. Another example is a ZigBee® transceiver, where ZigBee® refers to a standard and protocol designed for short range radio frequency communications. ZigBee® transceivers form mesh networks.

[0016] A wireless local area network transceiver is used for radio frequency communication over tens of meters or more between devices. An example of such a device is a Wi-Fi® device, where a Wi-Fi® device is one that is based on the IEEE 802.11 standard. Another example is a ZigBee® device—see discussion above. Wireless local area networks (WLANs) are typically configured to provide higher throughput and cover greater distances than wireless personal area networks (WPANs); a WLAN typically requires more expensive hardware to set up than a WPAN.

[0017] Power line communication (PLC) technology can be used to network computers over electrical power lines. This technology is restricted to short distances for high-speed transmission of large amounts of data. An alternating current line transceiver is used to enable PLC. A PLC network is another example of a LAN.

[0018] Wired local area networks (wired LANS), which include both wire and optical fiber, are also used to connect computers. A wired LAN is distinguished from a PLC LAN by the use of dedicated wires, used only for carrying communication signals and not used as a power lines. The Ethernet is the most widespread wired LAN technology.

[0019] Wide area networks (WANs) are computer networks that cover a broad geographical area—a network that crosses city, regional or national boundaries. The best known example of a WAN is the Internet. The Internet is a worldwide, publicly accessible plurality of interconnected computer networks that use a standard protocol—Transmission Control Protocol (TCP)/Internet Protocol (IP). Many local area networks are part of the Internet. There are also privately owned WANs. The World Wide Web (WWW), often referred to as the Web, is a collection of interconnected web pages. The Web is accessible via the Internet.

[0020] There is a need to effectively integrate these wide area networks, local area networks and short range communication devices into systems used for recharging electric vehicles.

SUMMARY OF THE INVENTION

[0021] A system for network-controlled charging of electric vehicles and the network-controlled electrical outlets used in this system are described herein. The system comprises electrical outlets, called Smartlets™, networked as follows: Smartlets™ and electric vehicle operators communicate via wireless communication links; Smartlets™ are connected by a LAN to a data control unit; and the data control unit is connected to a server via a WAN. The server stores: consumer profiles (including account information for payment); utility company power grid load data (updated in real time by the utility company); electricity consumption data that may be required for government tax purposes; and tax rate information received from tax authorities to allow an electric vehicle power consumption tax to be calculated. The system may be vehicle-to-grid enabled. The system of the invention may be used to assist in collecting a tax on electricity consumption by electric vehicles—the Smartlet™ system provides accurate measurement and reporting of electricity consumed by electric vehicles.

[0022] Vehicle operators may use a variety of mobile communication devices to communicate with the Smartlets™, including: one-way RFID, two-way RFID, WPAN and WLAN devices. Communication between the Smartlets™ and the data control unit may be either via a PLC LAN or a WLAN. The WAN may be a private WAN, or the Internet.

[0023] Some systems also include a payment station, remote from the Smartlets™, which can be set up to allow vehicle operators to pay for both parking and recharging of their vehicles. When payment stations are included in the system, the data control units may conveniently be incorporated into the payment stations. Some systems may be enhanced with a device for detecting the presence of a vehicle occupying the parking space in front of the Smartlet™. Such devices may include sonar, TV camera and induction coil devices. Furthermore, parking meter display units may be attached to the Smartlets™ to provide parking information, including: (1) paid parking time remaining; and (2) parking violation.

[0024] A Smartlet™ may comprise a network-controlled charge transfer device configured to connect to an electric vehicle for recharging; an electric power line connecting the charge transfer device to a local power source; a control device on the electric power line, for switching the charge transfer device on and off; a current measuring device on the electric power line, for measuring current flowing through the charge transfer device; a controller configured to operate the control device and to monitor the output from the current measuring device; a local area network transceiver connected to the controller, the local area network transceiver being configured to connect the controller to the data control unit; and a communication device connected to the controller, the communication device being configured to connect the controller to a mobile communication device, for communication between the operator of the electric vehicle and the controller.

[0025] A method of collecting electric vehicle power consumption tax for charge transferred between a local power source and an electric vehicle is disclosed herein. The method may comprise the following steps: (1) assembling a user

profile, the user profile containing payment information, the user profile being stored on a server; (2) providing a network-controlled charge transfer device, the device being connected to the local power source by an electric power line, charge transfer along the electric power line being controlled by a controller configured to operate a control device on the electric power line, the controller being connected to a local area network for communication to the server via a wide area network; (3) requesting, by an operator of the electric vehicle, to the controller for charge transfer; (4) relaying the request from the controller to the server; (5) validating, by the server, a payment source for the operator of the electric vehicle based on the user profile corresponding to the operator; (6) determining by the server, from geographical tax rate data and the geographical location of the network-controlled charge transfer device, an applicable tax rate on the charge transfer; (7) enabling charge transfer by communicating from the server to the controller to activate the control device; (8) monitoring the charge transfer using a current measuring device on the electric power line, the controller being configured to monitor the output from the current measuring device and to maintain a running total of charge transferred; (9) detecting completion of the charge transfer; and (10) on detecting completion, processing payment with the payment source and disabling charge transfer; wherein the payment includes the electric vehicle power consumption tax.

[0026] The method of collecting electric vehicle power consumption tax may also include the step of including tax incentives and/or tax relief. For example, tax incentives may be available for using certain alternative electricity sources such as solar, wind, wave, tidal and hydroelectric. From the source of energy requested and tax incentive data provided by tax authorities, the server determines whether a tax incentive will apply. Tax relief may be available for vehicle operators who have a low income or provide a special service. From the tax status of the vehicle operator and tax relief data provided by tax authorities, the server determines whether tax relief will apply.

[0027] When a payment station is available to a vehicle operator, a request to the Smartlet™ controller for vehicle charging may be made from the payment station instead of by a mobile communication device. When a vehicle operator does not have a user profile on the server, then the request to the controller for charge transfer includes payment information.

BRIEF DESCRIPTION OF THE FIGURES

[0028] FIG. **1** is a schematic diagram of a network-controlled charging outlet system according to a first embodiment of the invention.

[0029] FIG. **2** is a schematic diagram of a network-controlled charging outlet system according to a second embodiment of the invention.

[0030] FIG. **3** is a schematic circuit diagram of a network-controlled charging outlet of the invention.

[0031] FIG. **4** is a schematic circuit diagram of a parking meter display unit of the invention.

[0032] FIG. **5** is a schematic diagram of a server of the invention.

[0033] FIG. **6** is a schematic diagram of a remote payment system of the invention.

DETAILED DESCRIPTION

[0034] The present invention will now be described in detail with reference to the drawings, which are provided as illustrative examples of the invention so as to enable those skilled in the art to practice the invention. Notably, the figures and examples below are not meant to limit the scope of the present invention to a single embodiment, but other embodiments are possible by way of interchange of some or all of the described or illustrated elements.

[0035] A first embodiment of the network-controlled charge transfer system **100** for charging electric vehicles is shown in FIG. **1**. The system **100** comprises a network-controlled charge transfer device **110**, a local power source **120**, a data control unit **130**, and a server **140**. The system **100** interfaces with an electric vehicle **150**, with an electrical connector **152**, and an electric vehicle operator **160**, via a mobile communication device **162**. The network-controlled charge transfer device **110**, referred to herein as a Smartlet™, is connected to the local power source **120** by an electric power line **170**, and to the electric vehicle **150** by an electrical cable **175**. As shown in FIG. **1**, the electric vehicle **150** may be connected to the Smartlet™ **110** by an electrical connector **152** provided by the electric vehicle operator **160**. Alternatively, as shown in FIG. **2**, the electric vehicle may be connected to the Smartlet **110** by an electrical cable **116** which is hard wired into the Smartlet™ **110**. The flow of electrical power may be in either direction for both of the electrical connections **170** and **175**. In other words, the electric vehicle **150** can be recharged from the local power source **120**, or the local power source **120** can receive power from the electric vehicle **150**. The Smartlet™ **110** has a communication link to the data control unit **130** over a local area network (LAN) **180**. The LAN **180** may be either a wireless local area network (WLAN) or a power line communication (PLC) network. The data control unit **130** has a communication link to the server **140** over a wide area network (WAN) **185**. The electric vehicle operator **160** uses the mobile communication device **162** to establish a communication link to the Smartlet™ **110** over a wireless network **190**. This wireless network may be a WLAN or a wireless personal area network (WPAN). The communication link between the electric vehicle operator **160** and the Smartlet™ **110** allows information to be shared which enables recharging of the electric vehicle **150**.

[0036] The Smartlet™ **110** comprises an electrical receptacle **112** and indicator lights **114**. Alternatively, the indicator lights **114** may be replaced with a display. The electrical receptor **112** and the electrical connector **152** are configured to make an electrical connection allowing safe flow of electrical power between the Smartlet™ **110** and the electrical vehicle **150**. Examples of suitable receptacles are those conforming to the NEMA (National Electrical Manufacturers Association) standards 5-15, 5-20, 14-50 and SAE (Society of Automotive Engineers) standard J1772. Although, other receptacles will be used for systems outside the United States which operate at voltages other than 110V (for example 220V) and which are required to meet different standards. In preferred embodiments the electrical receptacle **112** has a cover. The cover is lockable and is released by the Smartlet™ **110** upon receipt of a request for charging of an electrical vehicle **150** by the electric vehicle operator **160**. This request may be made by the mobile communication device **162**, as described above.

[0037] The indicator lights **114** (or display) are used to show the operational status of the Smartlet™ **110**—for example, the status may be: charging in progress, charging complete, vehicle-to-grid (V2G) in progress and error warning. The indicator lights **114** may be LEDs (light emitting

diodes), may be capable of showing a number of different colors and may be capable of continuous or flashing modes of operation. Alternatively, the indicator lights **114** may be replaced by an alphanumeric display.

[0038] The local power source **120** may be an electrical supply grid owned and operated by local utility companies. Although, the local power source **120** may extend to parts of the electrical supply network that are not owned by the utility company, such as electrical cables on private premises and circuits which may be downstream from the utility company's meter. Alternatively, the local power source **120** may be an entirely privately owned circuit.

[0039] The data control unit **130** acts as a bridge between the LAN and the WAN, and enables communication between the Smartlet™ **110** and the server **140**. The server **140** is generally remote from the Smartlet™ **110**.

[0040] The system **100** is shown in FIG. **1** with only one Smartlet™ **110**; however, the system will be comprised of many Smartlets™ **110**, all linked to the server **140** through one or more data control units **130**. There will be one data control unit **130** for each group of geographically proximate (within the range of the same local area network) Smartlets™ **110**.

[0041] The electric vehicle **150** is any battery operated electric vehicle, including EVs and plug in hybrids. Electric vehicles **150** that have the necessary V2G electronics are able to provide power to the local power source **120**.

[0042] The mobile communication device **162**, used by the electric vehicle operator **160**, can be any type of WLAN or WPAN compatible device, or a wired communication device. Examples of compatible devices are: one way and two-way RFID devices, an example of the latter being a FasTrac® card; RFID transmitters; Wi-Fi® devices, such as a computer; vehicle electronics; BlueTooth® devices, such as a mobile phone; and ZigBee®) devices. In some embodiments of the invention the vehicle user **160** can monitor charging using the mobile communication device **162**. This can be implemented by allowing access by the vehicle user **160** to data recording the power consumed by the electric vehicle **150**, which is monitored by the Smartlet™ **110** and stored on the server **140**. Access can either be directly to the Smartlet™ **110** over a LAN or to the server **140** over the Internet.

[0043] A second embodiment of the network controlled charge transfer system **200** for charging electric vehicles **150** is shown in FIG. **2**. The system **200** comprises a network-controlled charge transfer device (Smartlet™) **110**, a local power source **120**, a payment station **135**, and a server **140**. The system **200** may be interfaced with an electric vehicle **150**, with an electrical cable **116**, and an electric vehicle operator **160**, via a mobile communication device **162**. (In alternative embodiments, the electric vehicle may be connected to the system **200** by an electrical connector **152**. See FIG. **1** for an example of such a connection.) The Smartlet™ **110** is connected to the local power source **120** by an electric power line **170**, and to the electric vehicle **150** by the electrical cable **116**. The electric vehicle **150** has a vehicle receptacle **154** for connecting with electrical cable **116**. In some embodiments, an electric meter may be positioned between the Smartlet™ **110** and the power line **170**. The flow of electrical power may be in either direction for both of the electrical connections **170** and **175**. The Smartlet™ **110** has a communication link to the payment station **135** over a LAN **180**. The LAN **180** may be either a WLAN or a PLC network. The payment station **135** has a communication link to the server **140** over a WAN **185**. (In this embodiment, the payment station **135** includes a data control unit **130** for acting as a bridge between the LAN and the WAN.) The electric vehicle operator **160** may use the mobile communication device **162** to establish a communication link to the Smartlet™ **110** over a wired connection or wireless network **190**. This wireless network may be a WLAN or a WPAN. Instead of using a mobile communication device **162**, the electric vehicle operator **160** may manually interact with the payment station **135**, which then sends appropriate instructions to the Smartlet™ **110** regarding charging of the electric vehicle **150**.

[0044] The electrical cable **116** and vehicle receptacle **154** are configured to make an electrical connection allowing safe flow of electrical power between the Smartlet™ **110** and the electrical vehicle **150**. Examples of suitable receptacles are those conforming to the NEMA (National Electrical Manufacturers Association) standards 5-15, 5-20, 14-50. Furthermore, examples of suitable receptacles and cables are those conforming to SAE (Society of Automotive Engineers) standard J1772. Although, other receptacles will be used for systems outside the United States which operate at voltages other than 110V (for example 220V) and which are required to meet different standards. The electrical cable **116** may be lockable to the Smartlet **110**, and is released on instructions from the payment station **135**, thus allowing the vehicle operator **160** to connect the electric vehicle **150** to the Smartlet™ **110** with the electrical cable **116**.

[0045] The payment station **135** can be several tens of meters remote from the Smartlet™ **110**. The payment station **135** is shown comprising a currency reader, a credit card reader, a receipt printer, a display and input buttons. However, the payment station does not have to include all of these components. For example, some payment stations may not include a currency reader and will only allow payment by credit card using the credit card reader. The electric vehicle operator **160** can use the payment station **135** to pay for and schedule recharging of the electric vehicle **150**, and also for V2G transactions. The payment station **135** may also be used to pay for parking. Further details of the payment station **135** are provided in FIG. **6** and the related description.

[0046] Smartlet™ **110** has several embodiments, including the embodiments shown in FIG. **1** and FIG. **2**, with an electrical receptacle **112** and an electrical cable **116**, respectively. A schematic of the Smartlet™ **110** with an electrical receptacle **112** is provided in FIG. **3**. The Smartlet™ **110** comprises an electrical receptacle **112**, a lockable cover **1125** over the electrical receptacle **112**, a control device **171**, a current measuring device **172**, an electric power line **170**, a controller **111**, a display unit **113**, a vehicle detector **115**, a WLAN transceiver **181**, an alternating current line transceiver **182**, a WPAN transceiver **191** and an RFID transceiver **192**.

[0047] Electric power is delivered to receptacle **112** along power line **170**. Controller **111** is used to lock and unlock the cover **1125**; the lock mechanism is electro-mechanical. When unlocked, the cover **1125** may be lifted by the vehicle operator **160** in order to connect the electric vehicle **150** to the electrical receptacle **112** using the electrical connector **152**. Control device **171** is used to turn the electric supply at the receptacle **112** on and off. The control device **171** is preferably a solid state device and is controlled by controller **111**. The current flowing along the power line **170** is measured by current measuring device **172**. An example of a suitable measuring device **172** is an induction coil. The controller **111** is programmed to monitor the signal from the current measur-

ing device **172** and to calculate the total energy (measured in kWh) either: consumed (in recharging the electric vehicle); or transferred to the local power source **120** from the electric vehicle **150** (V2G). It is also envisaged that energy may be both consumed and transferred to the grid during the time an electric vehicle is connected to the Smartlet™ **110**, in which case the controller **111** will calculate both the energy consumed and the energy transferred to the local power source **120**.

[0048] The indicators **114** and display **113** are controlled by the controller **111** and are used to provide information to the Smartlet™ **110** user. The indicators **114** are discussed in more detail above, with reference to FIG. **1**, and the display **113** is discussed in more detail below with reference to FIG. **4**.

[0049] Vehicle detector **115** is used to detect the presence of a vehicle in the parking space corresponding to the Smartlet™ **110**. The vehicle detector **115** is controlled by the controller **111**. The vehicle detector **115** is a detector such as a sonar sensor, a camera, or an induction coil. The sonar sensor is similar to those used on the rear bumper of automobiles to detect close proximity to an object; this sensor can be attached to the Smartlet™ **110** or will be mounted to a support structure in close proximity to the Smartlet™ **110**. The camera is a digital camera providing a video signal to the Smartlet™ **110**; the video signal is processed by an object recognition program to detect the presence of a vehicle or other obstruction. The induction coil is either embedded in the pavement of the parking space or is protected by a roadworthy casing attached to the surface of the pavement. The induction coil is connected to the Smartlet™ **110** and detects the presence of large metal objects in close proximity to the coil (such as an engine block, electric motor or rear differential of a vehicle).

[0050] The controller **111** is shown with four transceivers—a WLAN transceiver **181**, an alternating current line transceiver **182**, a WPAN transceiver **191** and an RFID transceiver **192**. A transceiver is a device that can send or receive signals, allowing for one-way or two-way communication. The WLAN transceiver **181** allows for the controller to communicate with mobile communication devices which may be carried by a vehicle operator **160** (see communication link **190** in FIGS. **1**& **2**) and with a data control unit **130** or payment station **135** (see communication link **180** in FIGS. **1** & **2**). WLAN transceiver **181** could be a Wi-Fi® transceiver. The alternating current line transceiver allows the controller to communicate on a PLC network with a control data unit **130** or payment station **135** (see communication link **180** in FIGS. **1** & **2**). The WPAN transceiver **191** allows the controller **111** to communicate with mobile communication devices **162** which may be carried by the vehicle operator **160**. WPAN transceiver **191** could be a BlueTooth® or ZigBee® transceiver. The RFID transceiver **192** allows the controller to communicate with a compatible RFID device carried by the vehicle operator **160**. An example of an RFID device that could be carried by the vehicle operator **160** is a FasTrak® card. A FasTrak® device is an example of a two-way RFID communication device. Although, a one-way RFID communication device from vehicle operator **160** to controller **111** can be utilized, as can a wired communication device from the vehicle. Not all embodiments of the Smartlet™ **110** have all four types of transceiver; however, all Smartlets™ **110** will have at least one wireless transceiver for communication with compatible mobile communication devices **162** available to vehicle operators **160**, and one transceiver for communication with the data control unit **130**. See FIGS. **1** & **2**.

[0051] The description of FIG. **3** provided above is also applicable to Smartlet™ **110** with an electrical cable **116** instead of an electrical receptacle **112**, except that instead of having a lockable cover **1125** the Smartlet™ may have a locking device which fixes the cable **116** to the Smartlet™ when not in use.

[0052] A more detailed view of the display unit **113** is shown in FIG. **4**. An example of parking information is shown on the display unit **113**—an indicator **1131** shows the paid parking time remaining in minutes **1132** or a parking violation **1133**. This parking information may be displayed in many other ways than that shown in FIG. **4**. The display unit **113** may be an LCD (liquid crystal display); although other passive flat panel displays such as OLEDs (organic light emitting displays) and other emissive flat panel displays such as FEDs (field emission displays) may be used. When a passive display unit **113** is used it is preferred that it be backlit, so as to be readily viewed in low ambient light conditions. The display unit **113** is attached to the Smartlet™ **110** so that it is readily observable by the vehicle operator **160**. For example, the display **113** may be mounted on a pole at a height of approximately 125 cm above the pavement, and the Smartlet™ **110** would also be mounted on the pole at a convenient height for the vehicle operator. The indicator lights **114** may be positioned next to the display **113**, or may be positioned on the Smartlet™ **110** itself, as shown in FIGS. **1** & **2**. The display **113** is controlled by the controller **111**. The display **113** may also be used to display information regarding the vehicle charging process, such as: time charging, power consumed, estimated time to completion of charging, vehicle-to-grid (V2G) power transferred, general status indications and error warnings.

[0053] A schematic diagram of the server **140** is shown in FIG. **5**. The server **140** comprises a computer **141**, report generator **142**, and database **143**. The server **140** is configured to communicate with the following: Smartlet™ network **195**; World Wide Web **197**; utility companies **144**, for receiving power load management data and sending payments for power consumed (less power sold back to the grid); credit card companies **145**, for credit authorization and charging; FasTrak® database **146**, for debiting FasTrak® accounts; banks **146**, for debiting bank accounts; and tax authorities **148**, for receiving tax rate information and sending tax payments. Here tax rate information may include both consumption and access taxes (the latter is also referred to as a privilege tax), as applicable. In addition to municipal, county, district, state and federal tax rates, information received from tax authorities **148** may include, details of tax incentive schemes to encourage use of electricity from sources such as wind and solar. The database **143** is used to store consumer profiles and other data required for report generation, as described below. The report generator **142** creates reports such as: utility company reports **1421**, detailing power consumed and V2G power sold to the local power grid; subscriber reports **1422**, detailing power consumed and V2G power sold to the local power grid, account balance, payments and invoices, and subscriber profile data; and tax authority reports **1423**, providing details of taxable transactions, taxes collected, and taxes paid by the Smartlet™ operator to the tax authority. In general, the tax authority will be the applicable state equalization board. However, when the Smartlet™ operator is a city or municipality the city may directly take municipal taxes.

[0054] The Smartlet™ network **195** comprises a multiplicity of data control units **130** and/or payment stations **135**, each data control unit **130** and/or payment station **135** being connected by a communication link **180** to a multiplicity of Smartlets™ **110**. The communication link **185** between the computer **141** and the Smartlet™ network **195** is a WAN.

[0055] The server **140** is interfaced with the Web **197** to allow subscribers (owners and operators **160** of electric vehicles **150**) to do the following: (1) set-up user/consumer profiles; and (2) determine availability of Smartlets™ **110** for recharging their electric vehicles **150**. A user profile contains financial account information—details required for payment—and may also include information such as whether the vehicle operator wants to: charge the electric vehicle only during periods of lower power rates; not charge the vehicle during periods of high power grid load; sell power to the local grid; buy electricity generated by a particular means, such as wind, solar or hydroelectric; and exchange carbon offsets. The user profile may also contain information relevant to the calculation of tax due to taxing authorities. For example, the profile may contain information regarding: the subscriber's eligibility for tax incentives, reductions or exemptions, such as low-income tax exemptions; the subscriber's liability for taxes such as road use tax, including uploaded electric vehicle odometer readings; and subscriber identification for tax purposes, such as a vehicle identification number or a social security number.

[0056] The availability of Smartlets™ **110** for recharging a subscriber's vehicle is stored on the server and the information is collected from the Smartlet™ network **195**. There are two ways that the availability of a Smartlet™ **110** can be determined: (1) using a vehicle detector **115** (see FIG. **3** and related description) to determine whether the parking space corresponding to the Smartlet™ **110** is available; and (2) flagging a Smartlet™ **110** as being unavailable whenever charging is ongoing, V2G is ongoing or parking has been paid for.

[0057] A schematic diagram of the payment station **135** is shown in FIG. **6**. The payment station **135** comprises a controller **1351**, a display **1352**, a set of buttons **1352**, a credit card reader **1354**, a receipt printer **1355**, a currency reader **1356**, a wireless transceiver **1357** and an alternating current line transceiver **1358**.

[0058] The display **1352** provides a vehicle operator **160** with information regarding recharging and/or parking their electric vehicle **150**. The display shares the same characteristics as the display **113** discussed above with reference to FIG. **4**. However, the display **1352** may also be touch sensitive, allowing a vehicle user to input information directly on the display screen **1352**. The buttons **1353** allow for input of information requested from the display **1352**.

[0059] The credit card reader **1354** is used for reading credit cards, debit cards, smart cards, and other cards that are used for identification purposes or for making payment. The printer **1355** is used for printing receipts, when requested by the consumer. The printer **1355** may also be used to print receipts for displaying in the electric vehicle **150** to show that recharging and/or parking is properly permitted. The currency reader **1356** is used for accepting currency—notes and/or coins—for payment. The currency reader **1356** is able to authenticate and identify the value of currency accepted.

[0060] The payment station **135** is networked to Smartlets™ **110** via either a WLAN or a PLC. The payment station controller **1351** may include a data control unit **130** which acts as a bridge between the LAN **180** and the WAN **185**. See FIGS. **1** & **2**.

[0061] A vehicle user **160** can use the network-controlled charge transfer systems **100** and **200** for charging their electric vehicle **150**. A vehicle user **160** who has a user profile on the server **140** is referred to as a subscriber. Some examples of how the systems **100** and **200** can be used are provided below.

Vehicle Charging Utilizing a Mobile Communication Device

[0062] 1. a subscriber uses the Internet to establish a profile, which includes setting-up payment by credit card, debiting a bank account, a FasTrak® account, a PayPal® account, or other financial service;

[0063] 2. the subscriber uses a communication device **162**, such as an RFID transmitter, a mobile phone or a FasTrak® card, to request to the Smartlet™ **110** to charge the electric vehicle **150**;

[0064] 3. the subscriber connects the electric vehicle **150** to the Smartlet™ **110** using the connector **152** (see FIGS. **1** & **2**);

[0065] 4. the Smartlet™ **110** relays this request over the communication network to the server **140**;

[0066] 5. the server **140** accesses the subscriber profile from the database **143**, validates the payment source by contacting the credit card company, FasTrak® database or bank, or confirms the balance available in a subscriber account on the system, and via the communication network enables the Smartlet™ **110** to charge the vehicle **150**;

[0067] 6. based on the subscriber profile and load management data from the utility company the server determines the charging periods and communicates this information to the Smartlet™ **110**;

[0068] 7. the Smartlet™ **110** monitors the charging current, as described above with reference to FIG. **3**;

[0069] 8. when the vehicle **150** is disconnected from the Smartlet™ **110**, charging is disabled and a request for payment is sent to the payment source; when the payment source is the subscriber's account on the system, the cost of charging is deducted from the subscriber's account. (The preferred method of payment is for a subscriber to have an account on the system into which preauthorized lump sums are deposited—from a credit card, bank account, etc.) Note that determining when the electric vehicle **150** is disconnected from the Smartlet™ **110** can be done by: detecting when the current flow goes to zero; or using a sensor on the receptacle **112** which detects the mechanical removal of the connector **152**. If a sensor is used, the sensor is monitored by controller **111**. See FIG. **3**.

Note that the load management data from the utility company may limit the ability to recharge the vehicle **150** or the recharge rate for vehicle **150**, according to a Demand Response system. For example, the utility company could send a message to the Smartlet™ server **140** requiring a reduction in load. The Smartlet™ server **140** then turns off charging of some vehicles **150**. Which vehicles have charging stopped will depend on the subscriber profiles and the requirements of the Demand Response system. The Demand Response system and subscriber profiles may also allow for V2G.

[0070] The general procedure described above is also followed for V2G or a combination of charging and V2G, except

that V2G will result in credits to the subscriber's account for sale of power to the local power grid.

Vehicle Charging Utilizing a Payment Station

[0071] 1. vehicle user **160** uses the payment station **135** to request and pay for charging the vehicle **150**;

[0072] 2. vehicle user **160** connects the electric vehicle **150** to the Smartlet™ **110** using connector **152** or cable **116**;

[0073] 3. the payment station **135** communicates via WAN **185** with server **140** for payment authorization;

[0074] 4. the payment station **135** enables the Smartlet™ **110** for charging;

[0075] 5. when the vehicle is disconnected from the Smartlet™ **110**, charging is disabled, the payment station **135** is notified, the payment station **135** notifies the server **140** and a request for payment is sent to the payment source, and if the payment source is a subscriber account on the system, the amount is deducted from the subscriber's account.

Note that the load management data from the utility company may limit the ability to recharge the vehicle **150** or the recharge rate for vehicle **150**, according to a Demand Response system.

[0076] The general procedure described above is also followed for V2G or a combination of charging and V2G, except that V2G will result in credits to the vehicle users account for sale of power to the local power grid.

Vehicle Parking Utilizing a Mobile Communication Device

[0077] 1. a subscriber uses the Internet to establish a profile, which includes setting-up payment by credit card, debiting a bank account, a FasTrak® account, a PayPal® account, or other financial service;

[0078] 2. the subscriber uses a mobile communication device **162**, such as an RFID transmitter or a mobile phone, to request to the Smartlet™ **110** parking for the vehicle **150**;

[0079] 3. the Smartlet™ **110** relays this request over the communication network to the server **140**;

[0080] 4. the server **140** accesses the subscriber profile from the database **143**, validates the payment source by checking the subscriber's account on the system, or by contacting the credit card company, FasTrak® database or bank, and via the communication network sends a message to the Smartlet™ **110** to allow parking of the vehicle **150**;

[0081] 5. the Smartlet™ **110** sets the parking meter shown on display **113** (see FIGS. **3** & **4**) and sets the indicators **114**, if used;

[0082] 6. the server **140** sends a request for payment to the payment source; when the payment source is the subscriber's account on the system, the cost of charging is deducted from the subscriber's account.

Optionally, if a vehicle detector **115** is used to detect the presence of a vehicle, then the amount of time a vehicle is parked without proper payment may be monitored and communicated to the payment station **135** and server **140**.

Vehicle Parking Utilizing a Payment Station

[0083] 1. vehicle user **160** uses the payment station **135** to request and pay for parking the vehicle **150**;

[0084] 2. the payment station **135** communicates via WAN **185** with server **140** for payment authorization;

[0085] 3. the payment station **135** communicates to the Smartlet™ **110** to allow parking;

[0086] 4. the server **140** sends a request for payment to the payment source; when the payment source is a subscriber's account on the system, the cost of charging is deducted from the subscriber's account.

[0087] The above methods for use of the Smartlet™ network for electric vehicle charging, V2G and parking can be combined. For example, a parking fee may be imposed in addition to a fee for power consumed in recharging a vehicle. Also, a parking fee may be imposed when a vehicle is parked for V2G.

[0088] As discussed above, an electric vehicle consumption tax may be imposed by federal, state, district, county and/or municipal authorities. Should such a tax be imposed, then the network-controlled charge transfer systems **100** and **200** must be able to collect the tax. Some examples of how the systems **100** and **200** can be used to collect an electric vehicle power consumption tax are provided below. ps Determination of Applicable Tax Rate

[0089] Tax authorities provide geographical tax rate data, detailing the rates for specific states, districts, counties and municipalities. This information is stored on the server **140**. The server also collects data regarding the geographical location of each electrical receptacle **110** and/or payment station **135**. The location data may be permanently stored on the server **140**, or may be provided when an electrical receptacle controller **111** or a payment station controller **1351** contacts the server **140** to request a charge transfer. From the geographical location of the electrical receptacle **110** or payment station **135** and the geographical tax rate data, an applicable tax rate can be calculated for any charge transfer. Applicable tax rates may either be calculated at the time a request for a charge transfer is received by the server **140**, or be calculated in advance and stored on the server **140**.

[0090] Furthermore, tax authorities may have tax incentives. For example, there may be tax incentives to encourage the use of alternative power sources, such as solar, wind, wave, tidal and hydroelectric. Generally these alternative power sources provide power to the power source **120** and consumers can pay a special (more expensive) price for power from these sources, subject to availability. Tax authorities provide such tax incentive data and it is stored on the server **140**. The server also collects data regarding the source of energy the vehicle operator requests. The source of energy may be determined when an electrical receptacle controller **111** or a payment station controller **1351** contacts the server **140** to request a charge transfer. Alternatively, the source of energy may be stored in a vehicle operator's user profile. From the source of energy and the tax incentive data, the server **140** determines whether a tax incentive will apply. Thus, when an applicable tax rate is being determined by the server **140**, as described above, tax incentives can be taken into account.

[0091] Yet further, tax authorities may provide tax relief to vehicle operators **160** who have a certain tax status. For example, vehicle operators **160** who have a low income or provide a special service may be eligible for tax relief. Tax authorities provide such tax relief data and it is stored on the server **140**. The server also collects data regarding the tax status of the vehicle operator. The tax status may be determined when an electrical receptacle controller **111** or a pay-

ment station controller **1351** contacts the server **140** to request a charge transfer. Alternatively, the tax status may be stored in a vehicle operator's user profile. From the tax status and the tax relief data, the server determines whether tax relief will apply. Thus, when an applicable tax rate is being determined by the server **140**, as described above, tax relief can be taken into account.

General Procedure for Tax Collection

[0092] The total charge transferred to the electric vehicle **150** is measured as described above. The measurement of total charge (in kWh) is sent to the server **140**. The server **140** calculates the appropriate tax from the applicable tax rate and the measurement of total charge. The tax is included in the amount that is submitted in the request for payment to the payment source. The tax received from payment sources is then transferred to the appropriate tax authority (generally the state equalization board) on a periodic basis (typically monthly or quarterly).

Tax Collection for Subscribers

[0093] A subscriber's profile, stored on the server **140**, will contain payment information—identifying a pre-approved payment source. The profile may also contain information relevant to calculating the consumption tax due on a charge transfer to the subscribers electric vehicle **150**. For example, the profile may: specify a preference for a particular source of energy which may entitle the subscriber to a tax incentive; specify a tax status which may entitle the subscriber to tax relief; and/or include tax identification for the subscriber.

[0094] Furthermore, a subscriber's profile may contain instructions to exchange carbon offsets when applicable.

Tax Collection for Non-Subscribers

[0095] Non-subscribers do not have a profile stored on the server. Consequently, a payment source must be identified and pre-approved prior to beginning charge transfer to an electric vehicle **150**. Furthermore, for a non-subscriber to purchase energy from a particular source, to take advantage of tax incentives and/or tax relief, or to exchange carbon offsets may require a set of interrogatories, most conveniently placed in a user friendly graphical user interface.

Reporting to Tax Authorities

[0096] Whenever a charge transfer to an electric vehicle is subject to a consumption tax, the following information is stored on the server **140**: a record of the total amount of charge (measured in kWh) transferred; the amount of tax collected; and the geographical location of the transaction (location of the electrical receptacle **110** or payment station **135**). This information is available to the report generator **142** on the server **140** for generating reports for tax authorities.

[0097] The above embodiments of the present invention have been given as examples, illustrative of the principles of the present invention. Variations of the apparatus and method will be apparent to those skilled in the art upon reading the present disclosure. These variations are to be included in the spirit of the present invention. For example, the Smartlet™ network may be used for public and private garage and parking lot charging of electric vehicles. Furthermore, the Smartlet™ network may be used for home charging of electric vehicles, in which case a Smartlet™ receptacle in the home is connected via a LAN and a WAN to the Smartlet™ server **140**. Those skilled in the art will appreciate that the Smartlet™ network may also be used for non-vehicle applications, including selling electricity to people in places such as airports and coffee shops.

What is claimed is:

1. A method of collecting electric vehicle power consumption tax for charge transferred between a local power source and an electric vehicle, comprising:

assembling a user profile, said user profile containing payment information, said user profile being stored on a server;

providing a network-controlled charge transfer device, said device being connected to said local power source by an electric power line, charge transfer along said electric power line being controlled by a controller configured to operate a control device on said electric power line, said controller being connected to a network for communication to said server;

requesting, by an operator of said electric vehicle, to said controller for charge transfer;

relaying said request from said controller to said server;

validating, by said server, a payment source for said operator of said electric vehicle based on said user profile corresponding to said operator;

determining by said server, from geographical tax rate data and the geographical location of said network-controlled charge transfer device, an applicable tax rate on said charge transfer;

enabling charge transfer by communicating from said server to said controller to activate said control device;

monitoring said charge transfer using a current measuring device on said electric power line, said controller being configured to monitor the output from said current measuring device and to maintain a running total of charge transferred;

detecting completion of said charge transfer; and

on detecting completion, processing payment with said payment source and disabling charge transfer;

wherein said payment includes said electric vehicle power consumption tax.

2. A method as in claim **1**, further comprising recording on said server the total charge transferred to said electric vehicle.

3. A method as in claim **2**, further comprising:

generating a report of power consumed for tax authorities;

wherein the record of said total charge transferred is available for generating said report.

4. A method as in claim **1**, further comprising storing on said server data identifying the geographical location of said network-controlled charge transfer device.

5. A method as in claim **1**, further comprising sending, by said controller to said server, data identifying the geographical location of said network-controlled charge transfer device.

6. A method as in claim **1**, further comprising receiving, at said server, geographical tax rate data from tax authorities.

7. A method as in claim **1**, further comprising storing, in said user profile, a preference for a source of energy.

8. A method as in claim **7**, wherein said source of energy is selected from the group consisting of solar, wind, wave, tidal and hydroelectric.

9. A method as in claim **7**, further comprising receiving, at said server, tax incentive data from tax authorities.

10. A method as in claim **9**, further comprising determining by said server, from said tax incentive data and said source of energy, whether a tax incentive applies to said charge transfer.

11. A method as in claim **1**, further comprising storing, in said user profile, a tax status, said tax status indicating eligibility for tax relief.

12. A method as in claim **11**, further comprising receiving, at said server, tax relief data from tax authorities.

13. A method as in claim **12**, further comprising determining by said server, from said tax relief data and said tax status, whether tax relief applies to said charge transfer.

14. A method as in claim **1**, further comprising storing, in said user profile, an instruction to exchange carbon offsets.

15. A method as in claim **1**, wherein said vehicle operator uses a mobile communication device to request to said controller for charge transfer.

16. A method as in claim **1**, wherein said wide area network is the Internet.

17. A method as in claim **1**, wherein said user profile is assembled from information provided by a vehicle operator over the Internet.

18. A method of collecting electric vehicle power consumption tax for charge transferred between a local power source and an electric vehicle, comprising:

assembling a user profile, said user profile containing payment information, said user profile being stored on a server;

providing a network-controlled charge transfer device, said device being connected to said local power source by an electric power line, charge transfer along said electric power line being controlled by a controller configured to operate a control device on said electric power line;

receiving a request to a remote payment station for charge transfer, said request being made by an operator of said electric vehicle, said remote payment station being connected to an alternating current line transceiver, said alternating current line transceiver being configured to connect said remote payment station to a power line communication network for access to said controller;

relaying said request from said remote payment station to said server, said remote payment station comprising a data control unit for communication to said server via a wide area network;

validating a payment source for said operator of said electric vehicle based on said user profile corresponding to said operator;

determining by said server, from geographical tax rate data and the geographical location of said remote payment station, an applicable tax rate on said charge transfer;

communicating successful validation of payment from said server to said remote payment station;

enabling charge transfer by communicating from said remote payment station to said controller to activate said control device;

monitoring said charge transfer using a current measuring device on said electric power line, said controller being configured to monitor the output from said current measuring device and to maintain a running total of charge transferred;

detecting completion of said charge transfer; and

on detecting completion, processing payment with said payment source and disabling charge transfer;

wherein said payment includes said electric vehicle power consumption tax.

19. A method as in claim **18**, further comprising storing, on said server, data identifying the geographical location of said remote payment station.

20. A method as in claim **18**, further comprising sending, by said remote payment station to said server, data identifying the geographical location of said remote payment station.

21. A method as in claim **18**, further comprising receiving at said server geographical tax rate data from tax authorities.

22. A method of collecting electric vehicle power consumption tax for charge transferred between a local power source and an electric vehicle, comprising:

providing a network-controlled charge transfer device, said device being connected to said local power source by an electric power line, charge transfer along said electric power line being controlled by a controller configured to operate a control device on said electric power line, said controller being connected to a network for communication to a server;

requesting, by an operator of said electric vehicle, to said controller for charge transfer, said request including payment information;

relaying said request from said controller to said server;

validating, by said server, a payment source for said operator of said electric vehicle based on said payment information;

determining by said server, from geographical tax rate data and the geographical location of said network-controlled charge transfer device, an applicable tax rate on said charge transfer;

enabling charge transfer by communicating from said server to said controller to activate said control device;

monitoring said charge transfer using a current measuring device on said electric power line, said controller being configured to monitor the output from said current measuring device and to maintain a running total of charge transferred;

detecting completion of said charge transfer; and

on detecting completion, processing payment with said payment source and disabling charge transfer;

wherein said payment includes said electric vehicle power consumption tax.

23. A method as in claim **22**, further comprising storing on said server data identifying the geographical location of said electrical receptacle.

24. A method as in claim **22**, further comprising sending by said controller to said server, data identifying the geographical location of said network-controlled charge transfer device.

* * * * *