DECLARATION OF NATHANIEL E FRANK-WHITE

1. I am a Records Request Processor at the Internet Archive. I make this declaration of my own personal knowledge.

2. The Internet Archive is a website that provides access to a digital library of Internet sites and other cultural artifacts in digital form. Like a paper library, we provide free access to researchers, historians, scholars, and the general public. The Internet Archive has partnered with and receives support from various institutions, including the Library of Congress.

3. The Internet Archive has created a service known as the Wayback Machine. The Wayback Machine makes it possible to browse more than 450 billion pages stored in the Internet Archive's web archive. Visitors to the Wayback Machine can search archives by URL (i.e., a website address). If archived records for a URL are available, the visitor will be presented with a display of available dates. The visitor may select one of those dates, and begin browsing an archived version of the Web. Links on archived files in the Wayback Machine point to other archived files (whether HTML pages or other file types), if any are found for the URL indicated by a given link. For instance, the Wayback Machine is designed such that when a visitor clicks on a hyperlink on an archived page that points to another URL, the visitor will be served the archived file found for the hyperlink's URL with the closest available date to the initial file containing the hyperlink.

4. The archived data made viewable and browseable by the Wayback Machine is obtained by use of web archiving software that automatically stores copies of files available via the Internet, each file preserved as it existed at a particular point in time.

5. The Internet Archive assigns a URL on its site to the archived files in the format http://web.archive.org/web/[Year in yyyy][Month in mm][Day in dd][Time code in hh:mm:ss]/[Archived URL] aka an "extended URL". Thus, the extended URL http://web.archive.org/web/19970126045828/http://www.archive.org/ would be the URL for the record of the Internet Archive home page HTML file (http://www.archive.org/) archived on January 26, 1997 at 4:58 a.m. and 28 seconds (1997/01/26 at 04:58:28). The date indicated by an extended URL applies to a preserved instance of a file for a given URL, but not necessarily to any other files linked therein. Thus, in the case of a page constituted by a primary HTML file and other separate files (e.g., files with images, audio, multimedia, design elements, or other embedded content) linked within that primary HTML file, the primary HTML file and the other files will each have their own respective extended URLs and may not have been archived on the same dates.

6. Attached hereto as Exhibit A are true and accurate copies of browser screenshots of the Internet Archive's records of the archived files for the URLs and the dates specified in the attached coversheet of each printout.

INTERNET ARCHIVE
archive.org

7. Attached hereto as Exhibit B are true and accurate copies of the Internet Archive's records of the archived files for the URLs and the dates specified in the attached coversheet of each file.

8. I declare under penalty of perjury under the laws of the United States of America that the foregoing is true and correct.

DATE: January 19, 2024

Nathaniel E Frank-White

Nathaniel E Frank-White

EXHIBIT A

https://web.archive.org/web/20130523213550/http://www.solren.com/?page_id=16#tab-340-3

INTERNET ARCHIVE WayBackMachine
http://www.solren.com/?page_id=16 Go
3 captures
23 May 2013 - 3 Oct
APR MAY 23 JUN
2012 2013 2014
About this capture

PVI 3000-7500 string inverters

FEATURES

- 96% CEC efficiency
- Wide input operating voltage window
- 9 Power Ratings
- 208 VAC, 240 VAC or 277 VAC
- Fully-integrated design
- Detachable wiring box
- Standard 10 year warranty
- Standard via RS485
- LCD

How to Buy

PVI 1800/2500 string inverters
PVI 3000-7500 string inverters
Integrated panels for PVI 1800-7500

Overview | Specifications | Media Library

Datasheet:
PVI 3000/3000S/4000/4000S/5000/5000S/5300/6500/7500

Manuals:
PVI 3000, 3000S, 4000, 4000S, 5000, 5000S & 5300 Installation and Operation Manual
PVI 6500 & 7500 Installation and Operation Manual

Warranty:
Grid-Tied Inverter Warranty Letter

Other Documentation »

Contact Us
Solectria Renewables HQ
360 Merrimack Street
Building 9, 2nd Floor
Lawrence, MA 01843 (USA)

Phone: (978) 683-9700
Email: inverters@solectria.com

2013 © Copyright Solectria Renewables. All rights reserved.

https://web.archive.org/web/20140404041325/http:/www.zeversolar.com/products/product-detail/product/detail/en-eversol-tl1500/

INTERNET ARCHIVE WayBackMachine
http://www.zeversolar.com/products/product-detail/product/detail/en-eversol-tl1500/ Go
12 captures
2 Apr 2014 - 19 Aug 2
MAR APR JUL
04
2013 2014 2018
About this capture

Eversol TL1500

Eversol TL1500

> Residential, Solar Inverters

Introduction

The latest generation of our well-proven, single-phase inverters for smaller residential projects up to 3kW are among most cost effective and reliable inverters on the market.

Features

- Maximum efficiency of 97%
- Wide range of DC input and MPPT voltage
- Low turn-off DC voltage
- Available with or without integrated DC-switch
- High protection class:IP65
- Comprehensive function of fault detection

Technical Data Download

DC input data

Max. PV array power [W]	1800
Max. DC voltage [V]	500
Rated input voltage[V]	360
MPP voltage range [V]	90-450
Full load MPP voltage range [V]	150-450
Switch-off DC Voltage [V]	70
Start voltage [V]	125
Max. DC current [A]	12
Max. number of parallel inputs	1
Number of MPP trackers	1
Switch-on power [W]	10

Output data

Rated AC power [W]	1500
Max. apparent AC Power [VA]	1650

Max. apparent AC Power [VA]	1650
Rated AC grid voltage [V]*	220,230,240
Rated AC grid frequency [Hz]*	50
AC voltage range [V]*	180-280
AC frequency range [Hz]	According to local codes
Rated current @ 230 Vac [A]	6.5
Max. current [A]	9
Power factor	> 0.99 (0.95 inductive ... 0.95 capacitive)
Harmonic distortion (THD) at rated output	< 2 %
Power consumption at night [W]	< 1
Power consumption at standby [W]	6

MPPT efficiency

MPPT adaptation efficiency	99.50 %

Conversion efficiency

Max. efficiency	97.00 %
European weighted efficiency (at 360VDC)	96.50 %

Safety equipment

DC Insulation monitoring	Integrated
Earth fault protection	Integrated
Mains monitoring	Integrated
Earth fault current monitoring	Integrated
DC current monitoring	Integrated

General data

Dimensions (WxHxD) [mm]	352 x 415 x 128
Weight [kg]	15.3
Installation environment	Indoor and outdoor
Mounting information	Wall mounting bracket
Operating temperature range	-25 °C ... +60 °C (derating in case of temperatures above 45°C)
Relative humidity	0 % to 100 %, no condensation
IP protection type	IP65 as per IEC60529
Insulation type	Transformerless
Cooling concept	Convection
Noise level	< 15 dB(A)@1m
LCD display	Text line, 16 x 2 characters
Communication interface	RS485
Software updates interface	-
Certificates and approvals	VDE0126-1-1, IEC61000-6-2, IEC61000-6-3, IEC61000-3-2, IEC61000-3-3, IEC62109-1, IEC62109-2, AS/NZS3100, VDE-AR-N 4105, AS4777.2, AS4777.3, C10/11, UTEC 15-

712-1, NEN50438, G83/2, EN50438

* The data may vary depending on the local grid standards.

As of March, 2014 / Technical data is subject to revisions.

Similar products

Eversol TL2000
Eversol TL2000

Eversol TL3000
Eversol TL3000

Evershine TL3680
Evershine TL3680

G59/3 ENEL Guida RD1663

Privacy Imprint Contact Everplan Solarcloud

Copyright © 2014 Jiangsu Zeversolar New Energy Co., Ltd., info@zeversolar.net www.zeversolar.com

EXHIBIT B

https://web.archive.org/web/20140711094535mp_/http://www.solren.com/manuals/PVI_6500-7500_Manual.pdf

PVI 6500
PVI 7500

INSTALLATION AND OPERATION MANUAL

Residential/Commercial
Grid-Tied Photovoltaic Inverter

© 2012, Solectria Renewables, LLC

All information subject to change without notice
REV H

05/07/2012

IMPORTANT REGISTRATION AND WARRANTY INFORMATION

For warranty to become active, this inverter must be registered. To activate warranty and register inverter, please visit the link below.

www.solren.com/registration

IMPORTANT SAFETY INSTRUCTIONS

- Before installing or using the PVI 6500-7500, please read all instructions and caution markings in this manual and on the PVI 6500-7500 unit as well as the PV modules.
- All electrical installations shall be performed in accordance with all local and national electrical codes. The PVI 6500-7500 inverters are listed to UL1741/IEEE1547/CSA 22.2#107.1 (and comply with IEEE 62.41).
- The PVI 6500-7500 inverters contain no user serviceable parts. Do not open the inverter. Please contact Solectria Renewables or a Solectria Renewables authorized system installer for maintenance.
- Connection of the PVI 6500-7500 to the electric utility grid must be done after receiving prior approval from the utility company and performed only by qualified personnel.
- Completely cover the surface of all PV-arrays with opaque material before wiring them or use other methods to prevent shock hazard. PV arrays produce electrical energy when exposed to sunlight and could create a hazardous condition.

SAVE THESE INSTRUCTIONS

This manual contains important instructions that shall be followed during installation and maintenance of the PVI 6500 and PVI 7500 Inverter.

To reduce the risk of electrical shock, and to ensure safe installation and operation of the inverter, the following safety symbols are used to indicate dangerous conditions and important safety instructions.

WARNING: This symbol indicates a fact or feature very important for the safety of the user to prevent injury or death and/or which can cause serious hardware damage if not followed appropriately.

Use extreme caution when performing this task.

CAUTION: Presents information to prevent damage to this product

EARTH GROUND SYMBOL

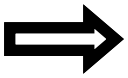

NOTE: This arrow symbol indicates a feature that is important either for optimal or efficient use and optimal system operation.

EXAMPLE: This sun symbol indicates an example.

General Safety Precautions

- Trained, qualified personnel are required to mount, reconfigure or repair this device.
- Do not work on the inverter when it is energized.
- Personnel must remove all conductive jewelry prior to installation or service of the device, parts, connectors, and/or wiring.
- Use proper lifting techniques whenever handling enclosure, equipment or parts.
- An equipment-grounding conductor must be provided for the inverter in accordance with local codes and regulations.
- A DC grounding connection must be provided for the inverter in accordance with local electrical code. The normally grounded conductor may be ungrounded and energized when a ground fault is indicated.
- The AC Neutral connection is only for voltage sensing and shall be neither used to carry currents nor bonded to ground inside the inverter except in the case of 277VAC use, where the neutral is current-carrying.
- This list does not contain all measures pertinent to the safe operation of the device. If special problems arise which are not described in sufficient detail for the purposes of the user, contact your distributor, dealer or call the Solectria Renewables customer service hotline.

SAVE THESE INSTRUCTIONS

Safe Installation and Operation

- Installation of the device must be in accordance with the safety regulations and all other relevant national or local regulations. Correct grounding and over current protection must be provided to ensure operational safety.
- Switch off and lock out the circuit breakers before installation and wiring. Avoid standing in water when working on the inverter. Confirm absence of voltage with an AC voltmeter.
- PV arrays will be energized when exposed to light. Cover the arrays with opaque material during installation and wiring. Confirm absence of voltage with a DC voltmeter.
- Attach the circuit panel cover correctly before switching on the circuit breakers.
- Do not install the inverter in direct sunlight.
- When no external voltage is present, the inverter can still hold high DC voltages and an electrical shock hazard may still be present.
- Allow at least 5 minutes for the inverter to discharge completely after disconnecting the AC and DC sources from the inverter. Verify absence of voltage with a DC voltmeter.
- External heat sinks can reach high enough temperatures in normal operation to cause skin burn injury when these parts are touched.
- To prevent the risk of fire hazard, do not cover or obstruct the heat sink.
- Allow changes in your electrical system to be carried out only by qualified electricians.

Repair and Maintenance

The inverter contains no user serviceable parts. Only Solectria Renewables personnel are authorized to carry out internal repair and maintenance of the unit. Please return the device for repair and maintenance. For maintenance and replacement of the fuses by qualified personnel, please refer to section 5.3.

WARNING!
Do not make alterations or tamper with components in the inverter without the manufacturer's authorization unless specified elsewhere in this manual. They may result in injury, electric shock, or fire and void the warranty.

Wiring the inverter

- **Input/Output Terminals: Use 90°C (194°F), #10 AWG to #6 AWG copper wire for DC connections and #10 AWG to #6 AWG copper wire for AC connections. Use only solid or stranded wire but not fine-stranded wire.**
- **Reconfirm that all connections have been performed properly and all screws are properly tightened and torqued.**

WARNING!
All electrical installations and the associated wiring shall be done in accordance with the local and national electrical codes and should follow the important safety instructions in this manual.

WARNING!
Make sure that you use suitable connecting conductors for both the AC and DC wiring. The conductors must be adequately sized and suitably specified for temperature extremes, UV radiation and other possible hazards.

Connection of the AC conductors

WARNING!
Reconfirm that the circuit breaker to the utility / breaker panel is switched OFF and locked out before connecting the conductors from the breaker to the AC terminal blocks.

Connection of the DC conductors

CAUTION!
Identify the polarity of DC voltage on each PV string and connect respectively to the input terminals marked "UNGROUNDED CONDUCTOR" and "GROUNDED CONDUCTOR". Make sure the DC voltage generated by the PV array is equal or less than 600 VDC factoring in open circuit extreme cold temperature.

WARNING!
Protect the DC conductors to the inverter from all possible hazards that could damage the wires.

WARNING!
Hazardous voltage is still present on the device after disconnection of all PV DC inputs. Allow 5 minutes for the inverter to discharge the stored energy completely. Verify absence of voltage with a DC voltmeter.

WARNING!
PV arrays will be energized when exposed to light. Cover the arrays with opaque materials during installation and wiring.

Table of Contents

1 Introduction 7
2 Installation 10
2.1 Checking for Shipping Damage 10
2.2 Inverter Mounting and Placement 10
2.3 Electrical Connection and Connection to Electrical Utility Grid, Surge/Lightning Arrestors and Grounding Electrode Conductors 18
2.4 Connection of AC Wiring 24
2.5 Connection of DC Wiring 27
2.6 Connection of Communication Wiring 31
2.4 Communication ID adjustment 33
3 Commissioning the Inverter and PV System 35
4 Power, Ground Fault, Error LED Indicators and LCD Display 37
4.1 Power, Ground Fault and Error LED Indicators 37
4.2 The LCD Display 39
5 Trouble Shooting 48
5.1 Diagnosis and analyzing data 48
5.2 Explanations of Error Messages 48
5.3 Maintenance 51
5.4 Factory Service 53
5.5 Inverter Replacement 53
6 Product Warranty & RMA Policy 62
6.1 Warranty Policy 62
6.2 Return Material Authorization Policy 65
7 Technical Data 66
7.1 Technical Information and specifications 66

Appendices 71
Appendix A: Brochure / Datasheet 71
Appendix B: Example PV String Sizing Tables 71
Appendix C: Contact Information & Authorized Dealers and Installers 71
Appendix D: Positive Grounding Option 71
Appendix E: Fault Repot Form 74
Appendix F: UL1741/IEEE1547 Listing Letter 75

Tesla, Inc.
Ex - 1014
Page 17 of 86

1 Introduction

The PVI 6500 and PVI 7500 are single phase, grid-tied PV inverters designed to be interconnected to the electric utility grid. By following the instructions in this manual, the PVI 6500 - PVI 7500 can be installed and operated safely. This installation guide is to be used as reference for commissioning and as a guideline on how to use the inverter most effectively.

Feeding power onto the grid involves conversion of the DC-voltage from the PV-array to grid compatible AC-voltage by "inverting" DC to AC. This unit feeds power into a standard 240 VAC split phase electrical system or two phases of a 208 VAC, 3-phase commercial, industrial or institutional facility's electrical system that is connected to the electric utility grid. The inverter can also be connected to one phase and neutral of a 277 VAC electrical service.

If the PV system and inverter are providing the same amount of electrical power that the facility is using, no power is taken from or fed onto the utility grid. If the facility is using more power than the PV system is providing, then the utility grid provides the balance of power. If the facility is using less power than the PV system is generating, the excess is fed into the utility grid.

Be sure to look into local regulations regarding net metering and interconnection in your local area. Note that some utilities need to change their revenue kWh meter to a bi-directional type for proper net metering measurement or incentives/billing.

Photovoltaic Array | PVI 6500-7500 Inverter | Electric Utility Grid

Fig. 1.1 Grid-tied inverter application

Tesla, Inc.
Ex - 1014
Page 18 of 86

The concept of stringing PV modules

The use of a PV string significantly reduces the cabling costs on a photovoltaic system. The use of strings of several PV modules in series and multiple parallel strings of PV modules is delivering a high operating voltage to the solar inverter. This advantage is primarily reflected in a higher efficiency of the inverter and lower wiring cost.

Data acquisition, display and communication

The integrated data acquisition and communication capability of the PVI 6500-7500 allows comprehensive tracking of system performance data. All error messages and operating conditions of the PVI 6500-7500, as well as those on the PV system are shown on the display.

An optional full-featured, inverter direct data acquisition and logging gateway and web-based service is available from Solectria Renewables, called SolrenView (http://www.solrenview.com). The gateway allows the inverter to deliver information to the Solrenview server through the facility's internet service.

Technical structure of the PVI 6500 and PVI 7500

A high frequency switching bridge circuit operating in conjunction with a high frequency transformer provides galvanic isolation of the photovoltaic system from the building's AC power and electrical utility grid. The Maximum Power Point tracking algorithm continuously controls the PV voltage and current to produce the maximum possible power output during varying sunlight strengths and PV module.

The inverter's DC input voltage window is designed to cover a PV array voltage range of 230 to 550 VDC. (600VDC maximum open circuit voltage). This allows many modules from different manufacturers to be used.

The inverter consumes nearly zero standby power at night. The daytime control circuit power use of the inverter is minimal, resulting in a very high inverter efficiency.

The housing and heat sink for the PVI 6500-7500 is manufactured using a heavy aluminium extrusion with an anti-corrosion finish. The housing is designed to meet the NEMA3 standard and is resistant to rain and snowfall. The heat sink and fan performance allow operation of the inverter at ambient temperatures of -13° F (–25° C) to +131° F (+55° C) for PVI 6500 and -13° F (–25° C) to +122° F (+50° C) for PVI 7500 at full rated power.

The heat sink conducts away heat generated from energy losses in the power electronics. Internal temperature regulation provides protection against excessively high temperatures inside the PVI 6500-7500. Should the inverter reach its maximum rated temperature, the power produced is automatically reduced to prevent excessive inverter temperature.

The PVI 6500-7500 will only operate in parallel with the utility grid. AC grid monitoring is performed by microcontrollers configured to meet the requirements of UL1741/IEEE1547/CSA 22.2#107.1, which include disconnection from the grid during abnormal frequency or voltage events. If this happens, the inverter will monitor the grid and reconnect to it 5 minutes after the grid has come back to normal. Disconnection from the grid is important to protect the electrical and utility line workers who may be working to restore the grid and not be aware of the presence a PV generator on that line.

Power grid faults that will cause the PVI 6500-7500 to isolate itself from the power grid:

- AC grid voltage

  The grid voltage must not go outside the range of +10/-12% of the nominal 240, 208V or 277V AC grid voltage, per IEEE Std 1547, § 4.2.3 (US). The inverter will isolate itself from the grid if these limits are exceeded. The inverter will automatically detect and synchronize to 240, 208 or 277VAC when the neutral is connected to the inverter. If it is desired to connect to 208, 240VAC without a neutral connection, then the selection must be set either at the factory or can be adjusted in the field by a qualified installer. It is not possible to operate at 277VAC without a neutral connection because the neutral is part of the current-carrying circuit.

- AC grid frequency

  The power grid frequency must not go outside of the range of +0.5Hz and -0.7Hz of the nominal 60Hz grid frequency, per IEEE Std 1547, § 4.2.4 (US). The inverter will isolate itself from the power grid if these permitted limits are exceeded.

Tesla, Inc.
Ex - 1014
Page 19 of 86

Another important safety feature that has the ability to isolate the inverter from the grid is the DC ground fault detection and interrupt (GFDI) circuit. The PV array's grounded conductor is bonded to ground inside the inverter through the GFDI fuse (and must not be bonded to ground at any other point outside of the inverter).

PVI 6500-7500 Description

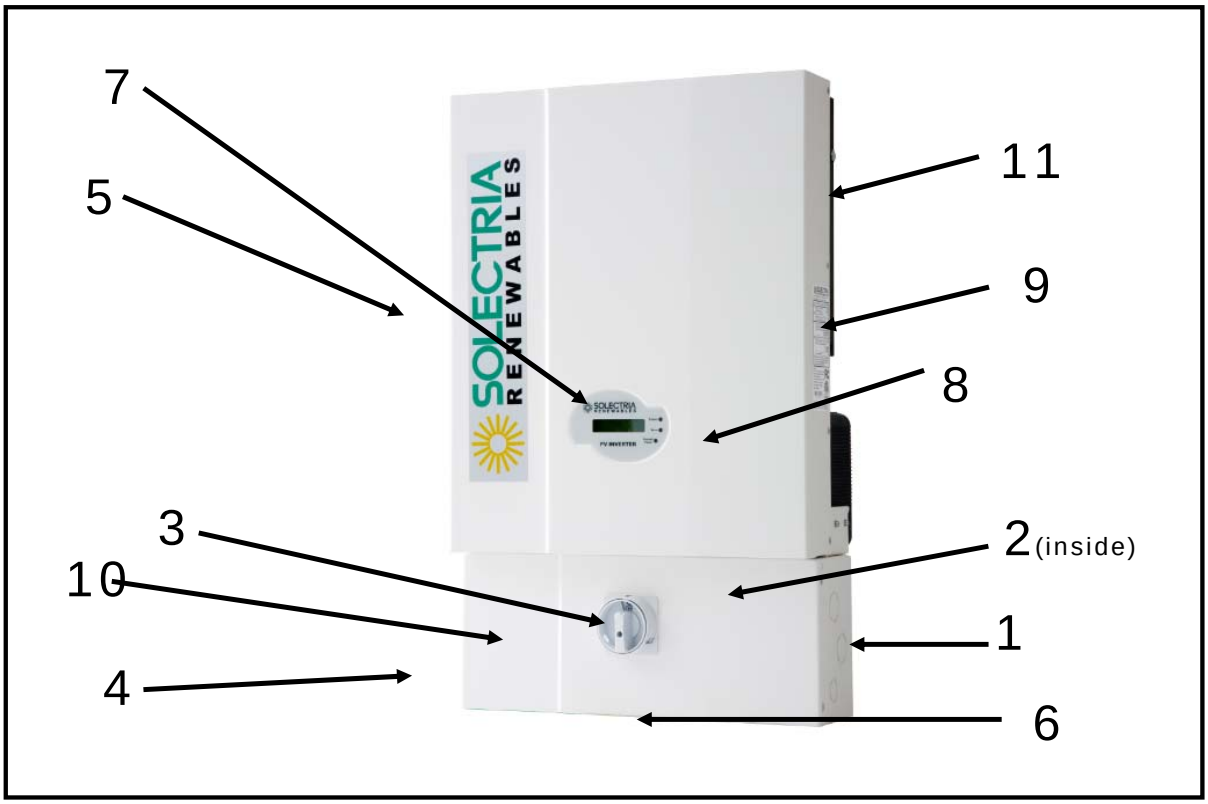

Fig. 1.2 PVI 6500/7500 Features Diagram

(1) AC knockouts

(2) PV array ground fault interrupt (GFDI) fuse (inside wiring box)

(3) Combined DC/AC disconnect switch

(4) DC knockouts

(5) Heat sink

(6) RS-485 interfaces

(7) LCD display

(8) LED indicators of basic operating status

(9) Inverter Serial Number

(10) Detachable wiring box

(11) Quick-mount wall plate (behind unit)

2 Installation

WARNING: Before installing the PVI 6500-7500, read all instructions and caution markings in this manual and on the PVI 6500-7500 as well as those written on the photovoltaic modules.

WARNING: Electrical installation shall be performed in accordance with all local and national electrical codes.

WARNING: Connecting the PVI 6500-7500 to the electric utility grid must only be performed after receiving prior approval from the utility company and installation completed only by qualified personnel/licensed electrician(s).

2.1 Checking for Shipping Damage

The PVI 6500/7500 inverters are thoroughly inspected and tested rigorously before they are shipped. Even though they are delivered in a rugged, heavy cardboard box with foam inserts, the inverters can be damaged in shipping.

Please inspect the inverter thoroughly upon delivery. If any damage is discovered please notify the shipping company immediately. If there is any question about potential shipping damage, contact Solectria Renewables. A photo of the damage may be helpful. Solectria Renewables is not responsible for shipping damage. A claim must be filed with the shipping company. Solectria Renewables will assist you with this process as needed.

Do not accept the unit if it is visibly damaged or if you note visible damage when signing shipping company receipt. Do not remove the unit from packaging. If it is determined that the unit must be returned, an RMA number must be obtained from Solectria Renewables.

2.2 Inverter Mounting

The PVI 6500/7500 inverter is comprised of a sealed NEMA 3 corrosion resistant, painted aluminum enclosure containing all electrical and electronic components.

NOTE: If the PVI 6500/7500 is mounted outside, during the installation process and in case of rain, do not open the inverter.

Notes regarding mounting and placement of the inverter

Criteria for inverter mounting:

- Because the inverter is in a NEMA3 enclosure, the inverter can be mounted outdoors.
- The longest inverter life can be achieved by mounting it in a clean, dry and cool location. It is recommended to keep the unit out of direct rain or snow. Protection by a roof overhang or covering is recommended if outdoor mounting is necessary.
- For optimal electrical efficiency, use the shortest possible AC and DC wires and use the maximum allowable wire size.
- Avoid installation in close proximity to people or animals, as there is a small amount of high-frequency audible switching noise emitted.
- Install the inverter in an accessible location following local codes. Note that code requirements for clearances and proximity to other equipment and building walls apply.
- Installation at eye level allows easy reading of the indicator LEDs and the LCD display.
- For optimal inverter life and performance, do not mount the inverter in direct sunlight, especially in hot climates. If the unit must be mounted in direct sunlight, a silver or white metal sun-shield is highly recommended. It is further recommended

that the inverter be mounted on the north or east side of buildings or on the northern side of a ground mounted PV array. Following these guidelines help prevent the unit from limiting the power produced due to an excessively high inverter temperature.

- In hot climates, the housing and heat sink can reach 160° F (70° C) and must be mounted on an appropriate material for this temperature as well as one that meets local codes. The inverter should not be mounted where people are likely to touch the case or heat sink due to the high potential temperature.

CAUTION: Please follow these guidelines:

- The inverter weighs approximately 89 lbs (40.8kg) (shipping weight in the box with mounting plate is approximately 104 lb). Be sure to use a mounting method that will safely hold this weight.

- The ambient temperature for the PVI 6500 must be between –13° F (–25° C) and +131° F (+55° C) for continuous, full power operation. For the PVI 7500 the maximum allowable ambient temperature is +122° F (+50° C). The inverter will automatically reduce power or shut down to protect itself if the ambient air temperature rises above 131° F (55° C)/ 122° F (50° C). Relative humidity shall be within 0% and 95%.

- Local and national electrical codes require that the inverter be connected to a dedicated AC circuit. The code also imposes limitations on the size of the inverter and the manner in with it is connected to the utility grid. See local codes for more information.

- The cooling air enters at the bottom of the heat sink and exhausts at the top of the unit. See Figure 2.1.1 for recommended clearances for cooling air and space around the inverter.

- If you are installing the inverter in a utility vault or electrical closet, the air circulation must be sufficient for heat dissipation – provide external ventilation, to maintain an ambient condition of less than 131° F (55° C)/ 122° F (50° C) for the PVI 6500 and PVI 7500. The ambient temperature should be kept as low as possible.

- Use the dimensional diagrams in Fig. 2.2.1 and 2.2.2, for correct mounting of the inverter.

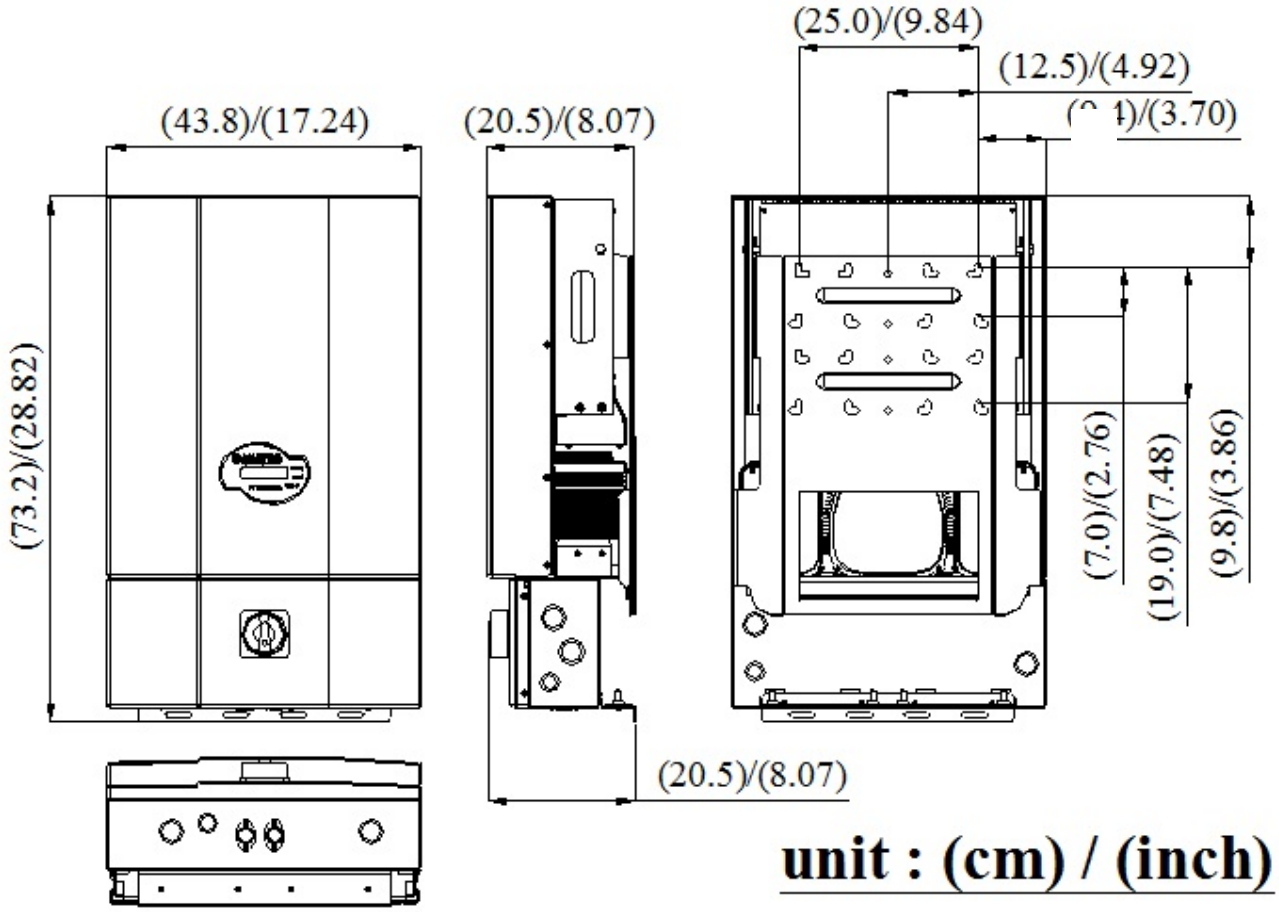

Fig. 2.2.1 PVI 6500/7500 Dimensional Diagram

Placement and location

WARNING!
Some parts of the heat sink can reach temperatures over 160F (70℃). Keep flammable, explosive materials or trash at an appropriate distance from the inverter!

WARNING!
Do not expose the inverter to corrosive liquids and/or gasses.

- The mounting bracket should be fastened to a concrete or a masonry wall using appropriate anchors.

Conduit Locations, Pre-punched Holes and Knock-outs

- Multiple concentric Knock-outs (KOs) are on the bottom, back and side of the AC and DC ends of the wiring box.
- Large Knock Outs are for 1”- ½” conduit. Small Knockouts are for ¾”-½” conduit.
- Concentric KOs are on the back of the AC and DC sides of the wiring box for a “hidden wiring” installation.

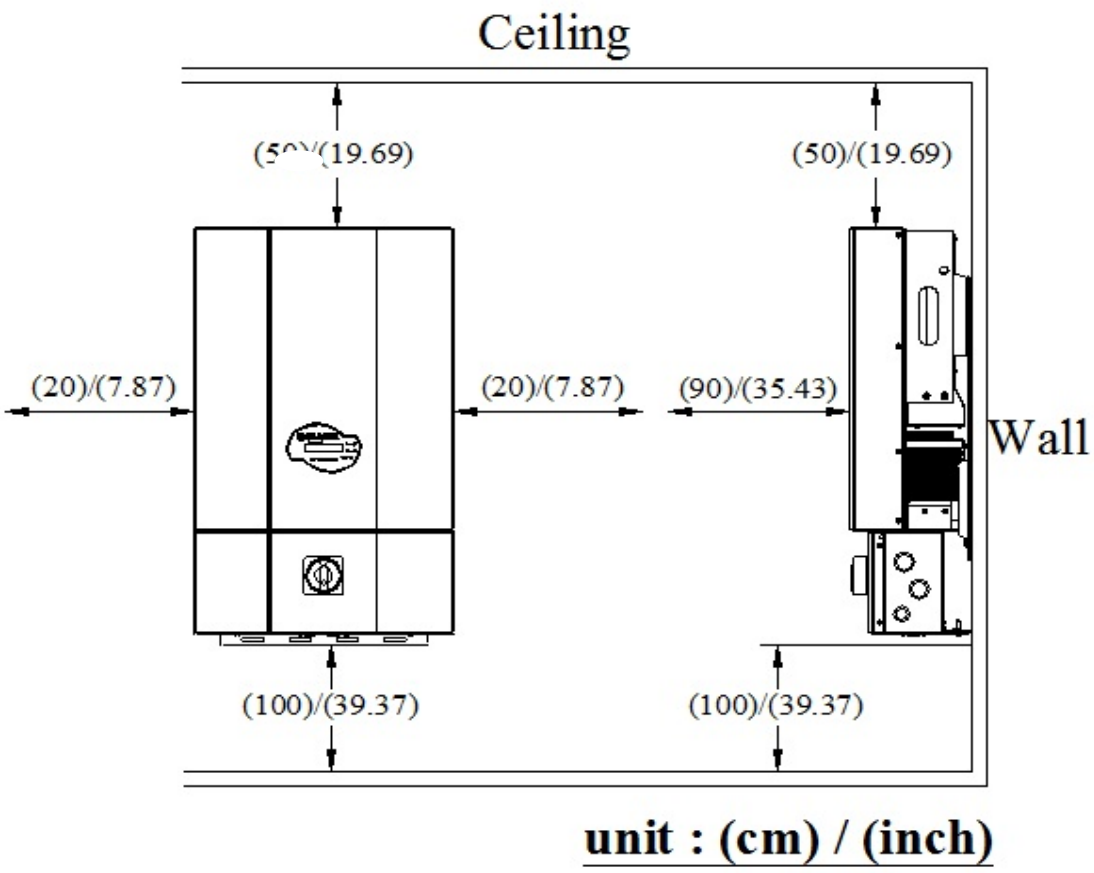

Fig 2.2.2 Clearances recommended for PVI 6500/7500 inverter installation

Mounting details

The steps listed below describe how to mount the inverter on the wall:

- After taking the inverter out of the cardboard box, you will find the bracket in the bag behind the heat sink. The bracket needs to be picked up from the inverter as shown in the figure 2.2.3 below.

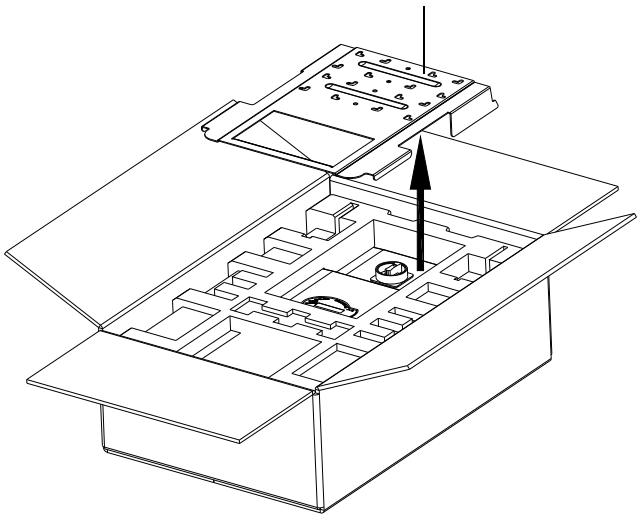

Fig 2.2.3 Unpacking the mounting bracket

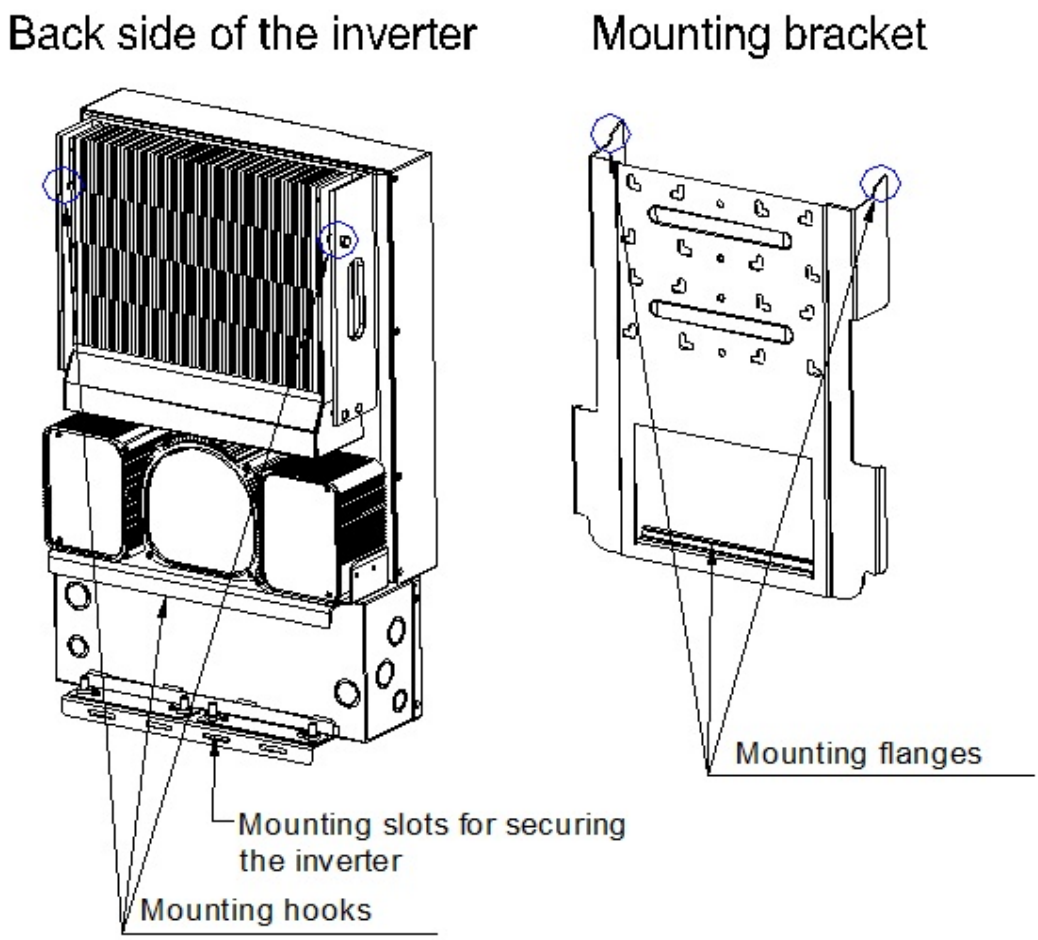

Fig 2.2.4 Remove the bracket from the inverter

1. Use the bracket (Fig 2.2.5) as a template to mark the hole locations on the wall. After drilling the holes, the mounting bracket should be fastened to the wall with screws or screw-anchors as shown in Figure 2.2.6.

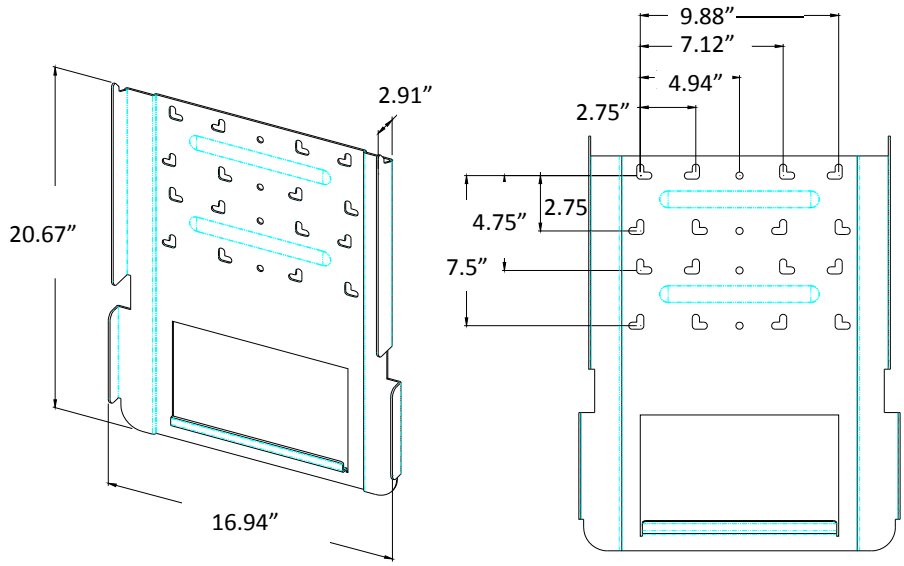

Fig 2.2.5 Mounting bracket and its dimensions

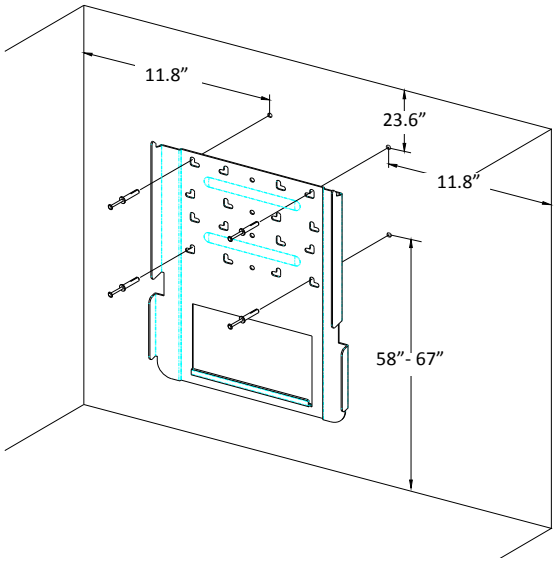

¼” diameter mounting screw recommended or
3/16-1/4” anchor bolt

Fig 2.2.6. Fastening the mounting bracket

2. Once the mounting bracket is fastened to the wall, the inverter and the wiring box can be hooked onto the bracket and slipped down into place. Make sure the lower lip on the bracket hooks into the window on the back of the inverter as shown in Fig. 2.2.7.

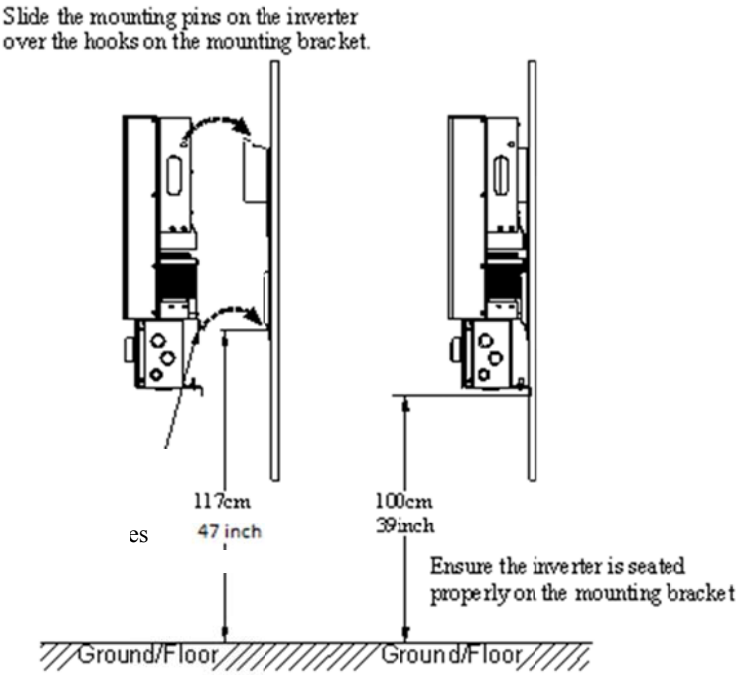

Fig 2.2.7 Mounting Inverter on bracket

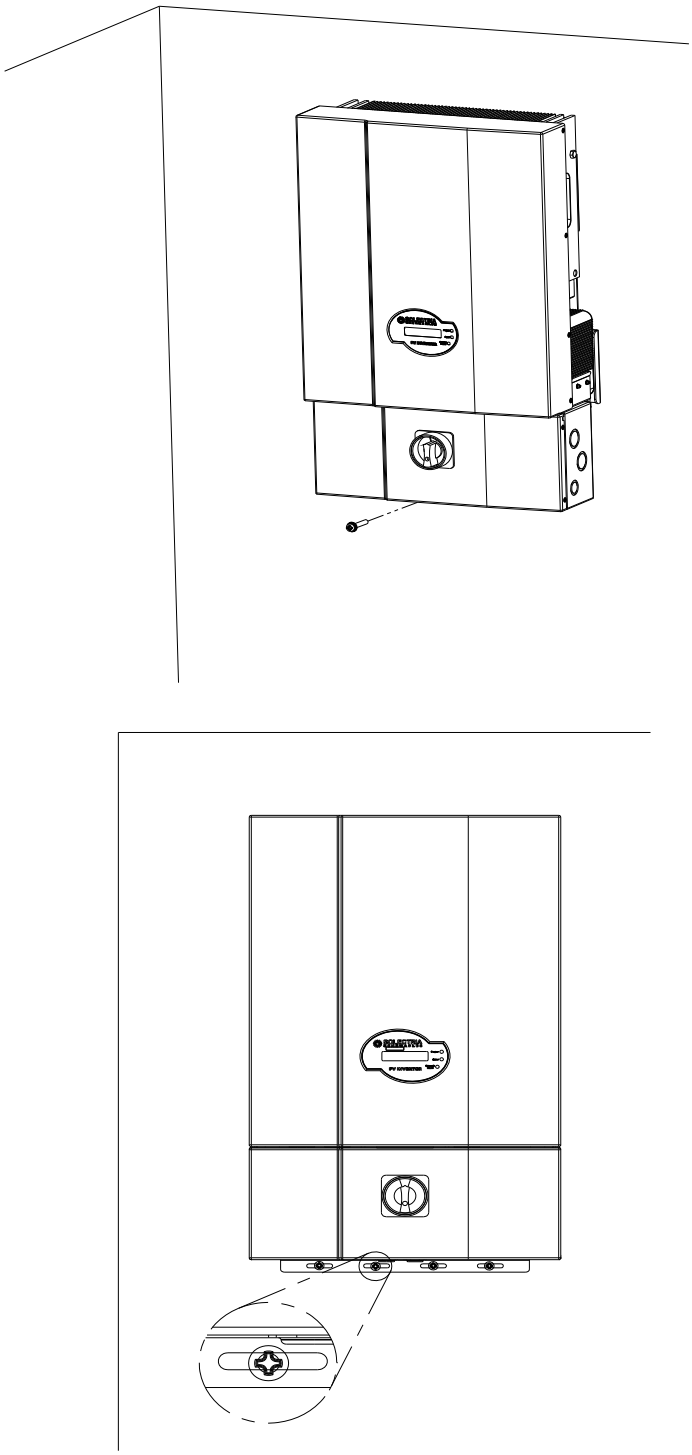

Fig 2.2.8 Fasten the inverter with screws at the bottom flange

After the inverter is hooked properly on the bracket, secure it with screws at the bottom flange.

2.3 Electrical Connection and Connection to the Grid

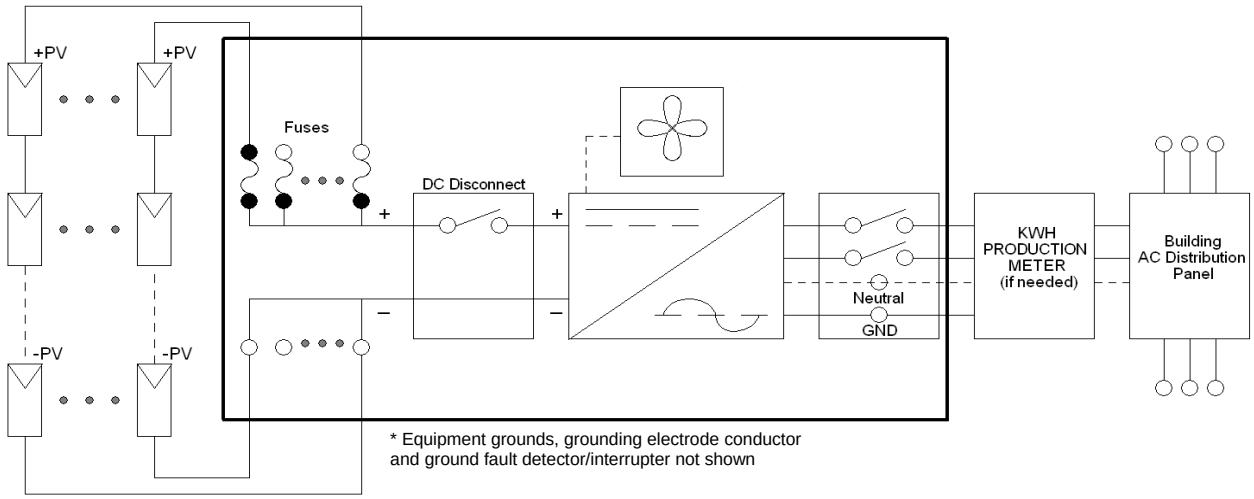

PVI 6500-7500 PV SYSTEM BLOCK DIAGRAM

Fig. 2.3.1 Simplified electrical connection diagram

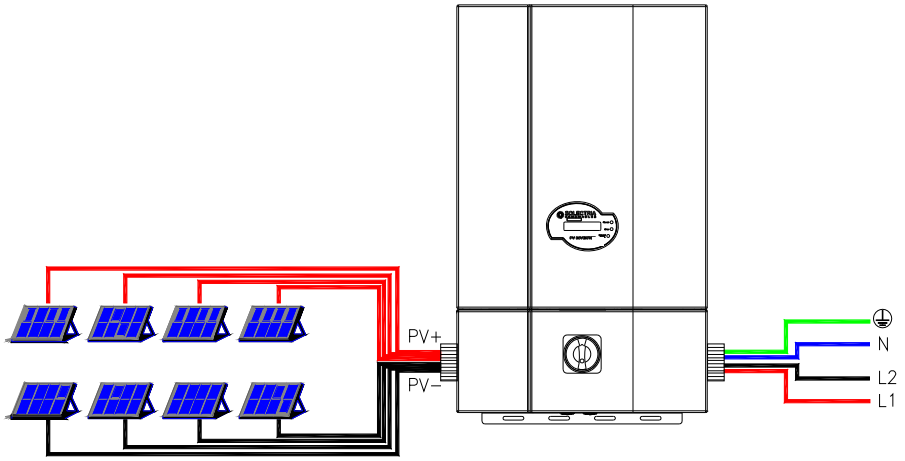

* Colors used in wiring diagram are to differentiate conductors and are not representative of wire colors used pre code.

Fig 2.3.2 Basic Connections

WARNING: All electrical installations shall be performed in accordance with local and national electrical codes.

The grounded DC photovoltaic connection is bonded to ground within the inverter through the ground fault detection and interrupt circuit (GFDI) and should not be bonded at any other point in the system. The ungrounded DC connection must never be grounded at any time.

AC and DC (PV) Connections:
The PVI 6500-7500 inverters are equipped with covered holes and KOs for conduit fittings that are code-compliant for use with several sizes of rigid and flexible metallic or non-metallic conduit. All conduit and wiring installation is done in the wiring box. This design allows installation and wiring of the inverter to be done without opening the main inverter enclosure which must never be opened. AC & DC terminals allow for #10 to #6 AWG copper conductors.

Lightning and Surge Protection:
The inverter is designed with certain protections against voltage surges with certification to UL1741/IEEE1547 and CSA22.2#107.1 (including ANSI/IEEE 62.41/62.42). In areas of frequent lightning storms or when no primary lightning protection system is used (air terminals), additional surge protection on DC and AC side and solid grounding provisions are important for best protection against utility voltage transients and surges created by indirect lightning strikes.

The installation of a lightning arrester or other UL listed surge arrester of the correct specification is recommended on both the DC and AC sides of inverter. They can be installed on the outside of the wiring box or other locations in the system and wired using the manufacturer's directions. When coordinated with the Surge Protection Device, lightning arrestors give important added protection from direct lightning strikes and resulting surges. Make sure to check the lightning protection system of the building and perform any necessary upgrade before the PV system is installed. A solid lightning protection scheme is especially important for areas prone to thunderstorms and possible nearby lightning strikes. Although these added precautions will not guarantee that there will be no damage from lightning, they can help prevent or limit potential damage.

Grounding Electrode Conductor:
As with all PV systems, a Grounding Electrode Conductor must be installed per code. This conductor should be sized according to these code requirements. This conductor should be terminated on the labeled ground point located at the bottom of the wiring box where the DC and AC equipment ground conductors also are terminated.

AC Voltage:

The PVI 6500-7500 inverters are 240V AC grid connected devices. They are also suitable for 208V and 277V AC grid-connected use. For example, connection between two phases of a 208V AC, 3-phase service or connection between one phase and neutral of a 277V AC service (where acceptable by code). **No unit (PVI 6500 or 7500) can be used with a 120V AC service**. The units are factory pre-set to auto-detect 277VAC, 240VAC or 208VAC when connected with a neutral. They can also be configured for either 240 or 208 VAC without a neutral at the factory or by a qualified installer. Use with 277VAC must always use a neutral as the neutral is used as a current carrying conductor.

WARNING: The inverter should not be opened at any time unless authorized by Solectria. The unit is sealed at the factory and its UL listing will no longer be valid and the warranty will be void if opened or tampered with in any way.

Multiple Units:

Multiple PVI 6500-7500 units can be used at the same location as long as all electrical codes, local building codes and area utility guidelines are followed. If multiple units are used, each inverter must have its own dedicated AC over current protection device, and PV strings cannot be wired to multiple inverters.

AC Over Current Protection Device:

A dedicated AC over current protection device is required for each PV inverter. Every PVI requires a 208V, 240V or 277V AC rated 2–pole over current protection device. The following is a table showing the appropriate over current protection device rating for the PVI 6500 and 7500 at different service voltages.

AC Voltage	PVI 6500	PVI 7500
208VAC	**40A**	**50A**
240VAC	**35A**	**40A**
277VAC	**30A**	**35A**

AC and DC Disconnects:

The integral AC & DC disconnects are standard features of the PVI 6500-7500 inverters. The PV system may need additional AC or DC disconnect if required by the utility or local code.

Connecting the AC Inverter Wiring:

WARNING: The wiring of the PV inverter's AC and DC connections must only be done with the building AC circuit breaker off and locked out and the PV array disconnected or covered with an opaque material (or other method that establishes electrically safe working conditions). Both AC and DC should be disconnected or turned off.

The PVI 6500-7500 inverters are not capable of feeding currents back into the PV array from the AC source including into short circuit(s) or fault(s) in the PV array or string(s).

Connecting the Inverter Wiring:

WARNING: Follow PV module manufacturer's installation directions. PV arrays produce electrical energy when exposed to light and could create a hazardous condition. Disconnect array conductors when wiring the inverter or cover the array with an opaque material prior to wiring.

WARNING: Before connecting the connectors of the PV module to the DC inverter terminals, check the correct polarity and admissible PV module voltage between the (+) and the (-) wire connectors of the PV module.

The PV module open circuit voltage must be below 600V DC (V_{pv} < 600V DC) under all temperature conditions per code.

WARNING: Even when in the off position, the fused PV combiner and the DC disconnect terminals will remain live on the PV side when the PV modules are in daylight.

Wiring the inverter

The cover of the wiring box needs to be removed before wiring the inverter. First the DC/AC disconnect switch shall be turned to the OFF position as shown in the Figure 2.3.3. Remove the 4 screws, and then the cover of the wiring box shown in the figure 2.3.3 and 2.3.4.

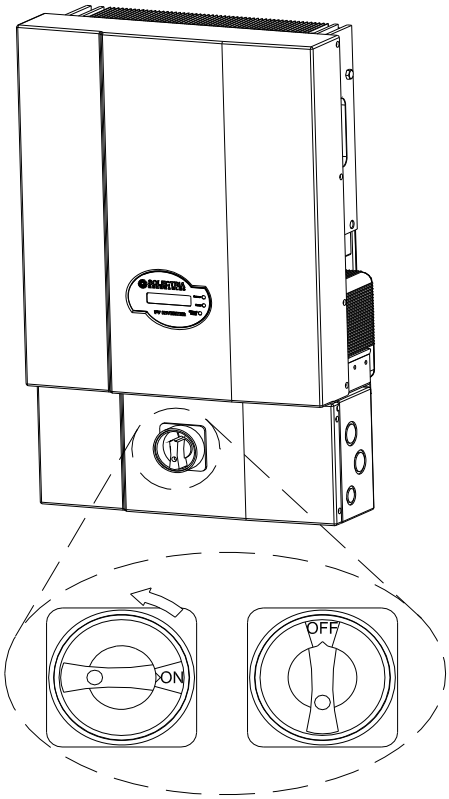

Fig 2.3.3 Turn the DC/AC disconnect switch OFF

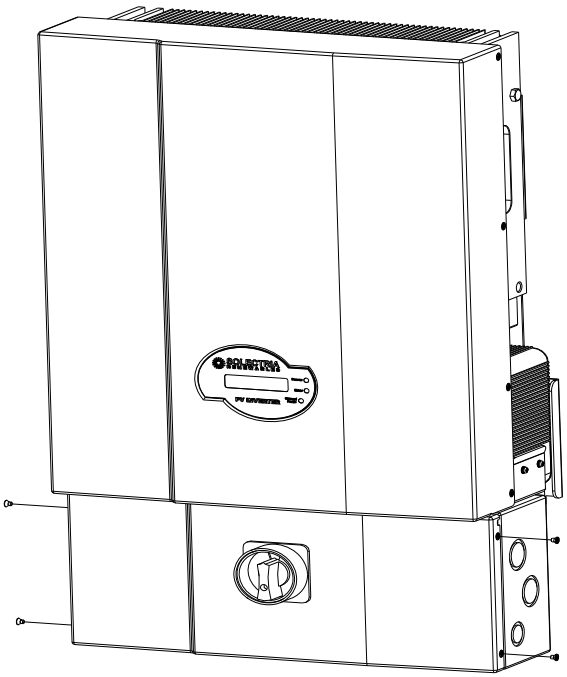

Fig 2.3.4 Remove the 4 screws on the wiring box and remove the cover

`

After the wiring box cover is removed, the conduit hole covers can be removed (or KOs in other locations punched out) as shown in the figure 2.3.5 for the DC and AC conduits which will enter and exit these locations.

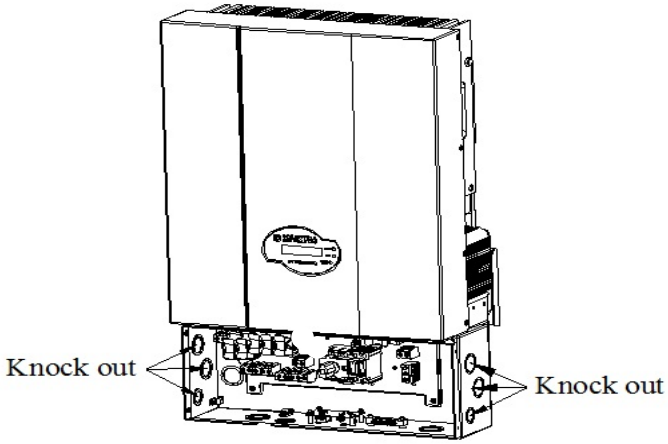

Fig 2.3.5 Punch out the knockouts where the conduits will enter the wiring box.

The following three sections describe the wiring for the AC, DC, and communication ports. The AC and DC wiring shall be done in the wiring box of the PVI 6500/7500.

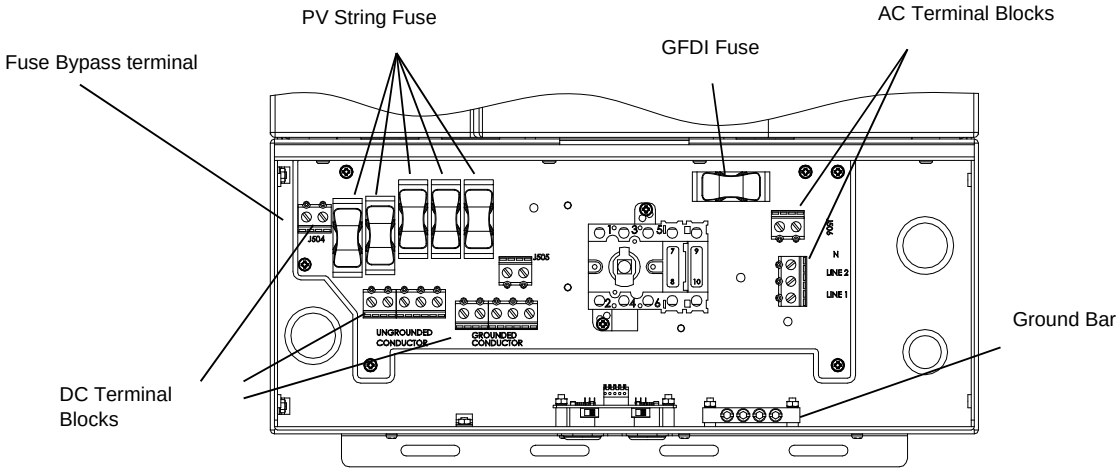

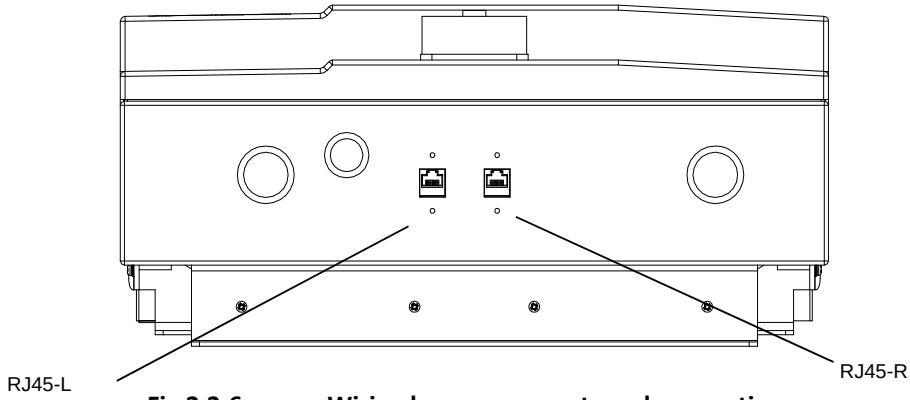

Fig 2.3.6 Wiring box components and connections

Two RJ-45 connectors are used for external communication to a Solectria communication gateway. The AC terminal block is used to connect to the building/utility grid through a dedicated circuit breaker in the building distribution panel.

WARNING!
All electrical work shall be done in accordance with the local and national electrical codes and should follow the important safety instructions in this manual.

WARNING!
Local and national electrical codes state that the inverter must be connected to a dedicated circuit, and that no other outlets or devices can be connected to the same circuit. The code also imposes limitations on the size of the inverter and the manner in which it is connected to the utility gird.

WARNING!
Make sure that you use suitable conductors for both the AC and DC wiring. The conductors must be adequately sized and of correct temperature rating and sunlight resistant if needed. Use only #10 AWG to #6 AWG, 90°C (194°F) stranded or solid copper wire (but not fine-stranded wire) for all AC and DC wiring connections to the PVI 6500/7500 inverter.

WARNING!
PV arrays will be energized when exposed to light. Cover the arrays with opaque materials during installation and wiring, and/or keep module leads disconnected.

Before wiring the PVI 6500-7500 inverter, the installer needs to determine the grid connection/utility configuration that the inverter will be connected to. The inverter is default set for utility interconnection with a neutral connection. However, it may be reconfigured for a connection without a neutral. The utility voltage configuration jumpers, J210, are located on the control board as shown in figure 2.3.7 are used to set the inverter to be connected to the commonly used utility configuration types shown in the figure 2.3.8. As shown in the figure 2.3.7, the P1 and P2 pins are used to configure the inverter for the connection types of 208V, 240V and 277VAC outputs with or without neutral (with neutral only for 277V). When the inverter is set for the connection configurations with neutral, it can automatically detect the utility voltage and adjust the output AC voltage according the grid voltage.

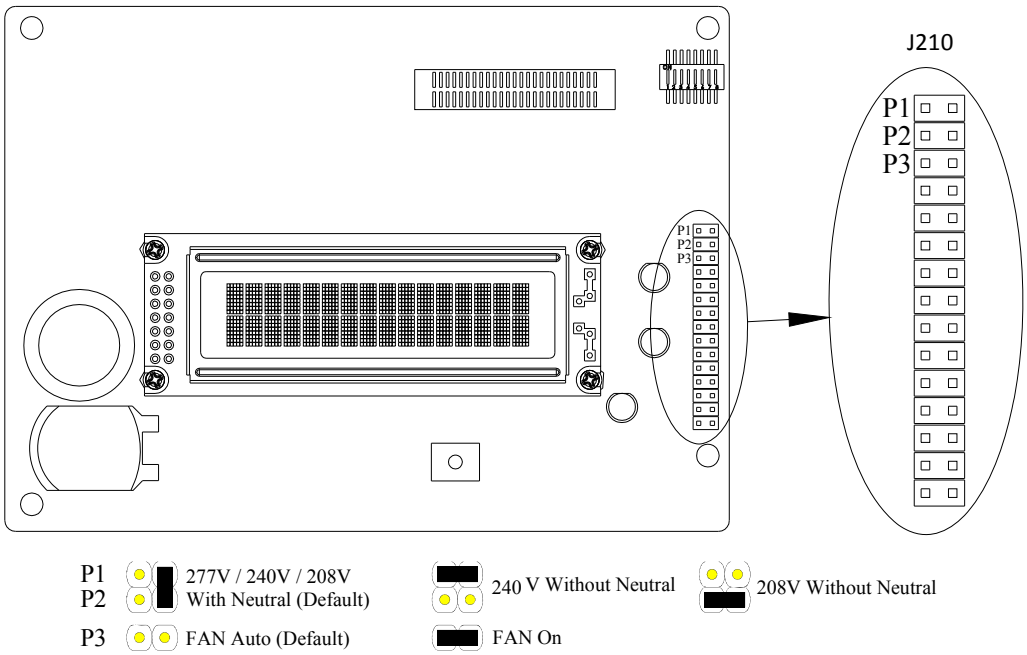

Fig 2.3.7 Building/Utility voltage configuration jumpers (qualified personnel only)

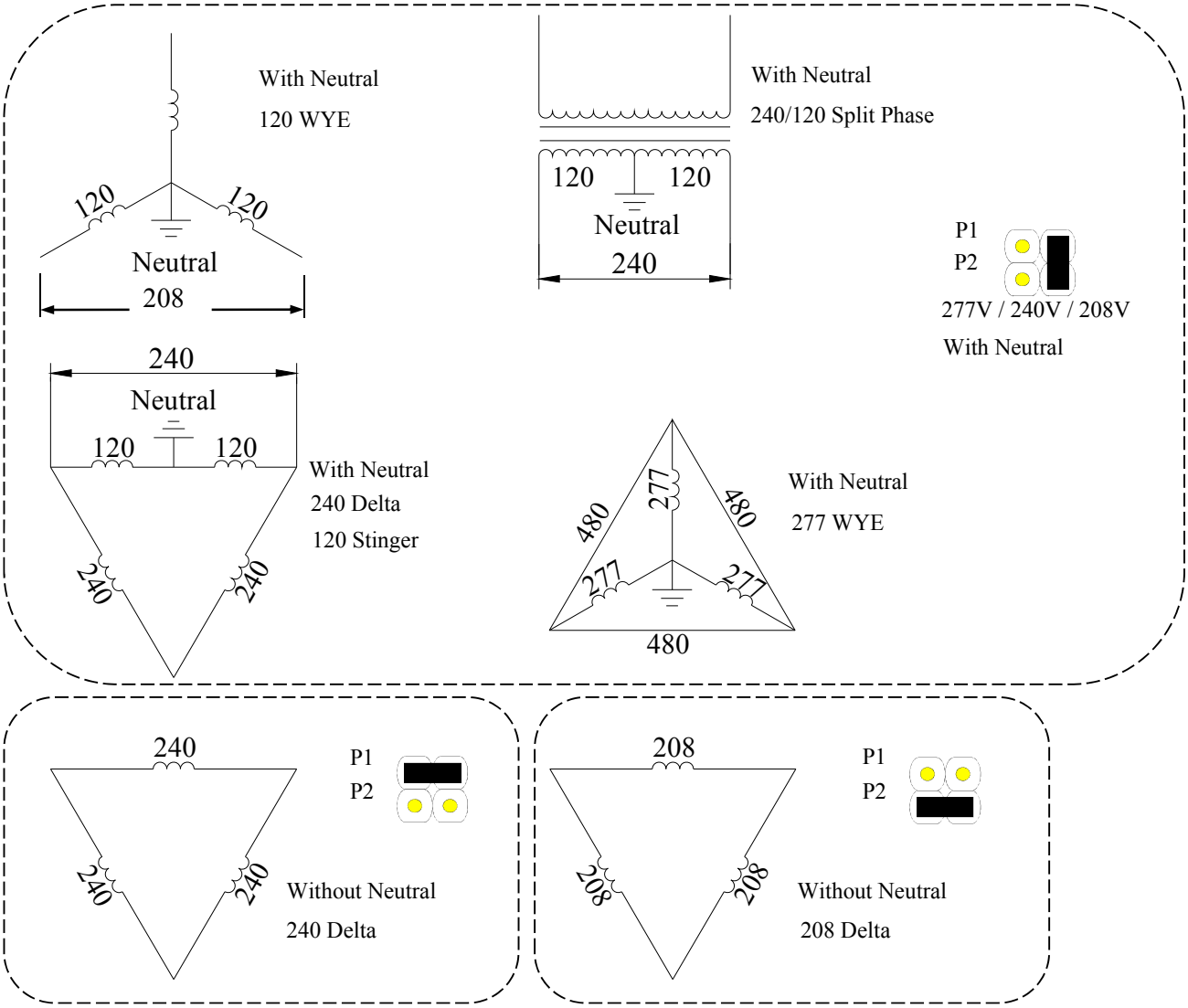

Fig 2.3.8 Utility configurations

2.4 Connection of the AC wiring

Use one of the following procedures below to wire the AC conductors.
Open the circuit breaker box, switch off and lock out the circuit breaker box that will be used to connect the inverter to the building.

WARNING!
Reconfirm that the circuit breaker to the grid/utility is switched OFF and locked out before connecting the power wires from the breaker to the inverter AC terminal block. Measure the absence of voltage with an AC voltmeter.

WARNING!
Long wires cause voltage drop. The acceptable range for AC voltage drop is 1.5% of nominal. The voltage drop in excess of 1.5% of nominal AC voltage is an indication that larger size wire should be used.

WARNING!
Each connection to a PVI 6500-7500 inverter must be installed with a dedicated circuit breaker with 30-50 amperes (depending on inverter model, see "AC Circuit Breaker" table) maximum branch circuit over current protection.

Use #10 AWG to #6 AWG, 90°C (194°F) copper wire for all AC wiring connections to the PVI 6500/7500 inverters.

2.4.1 Connection for AC 208/240V Service/Utility Voltage (Default)

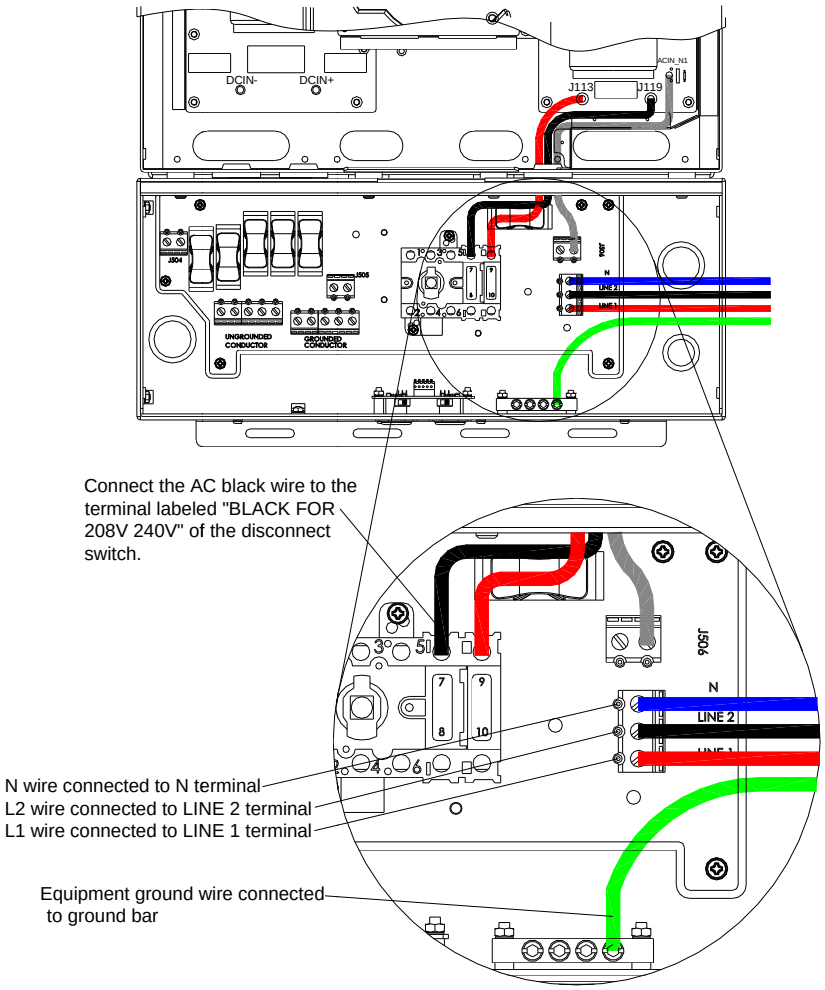

Fig 2.4.1.1 AC Terminal Block for AC wire connections with 208/240VAC

- Connect the AC equipment GND wire to the screw on the ground bar labeled with stamp. ⏚
- Connect the white N wire to the terminal labeled N on the AC terminal block.
- Connect the L1 wire to the terminal labeled Line1 on the AC terminal block.
- Connect the L2 wire to the terminal labeled Line2 on the AC terminal block.
- Tighten the screws with a torque of 15.6 in-lb (1.7Nm)
- Reconfirm that all connections are correct as described above and all screws are properly tightened.

2.4.2 Connection for AC 277V Service/Utility Voltage

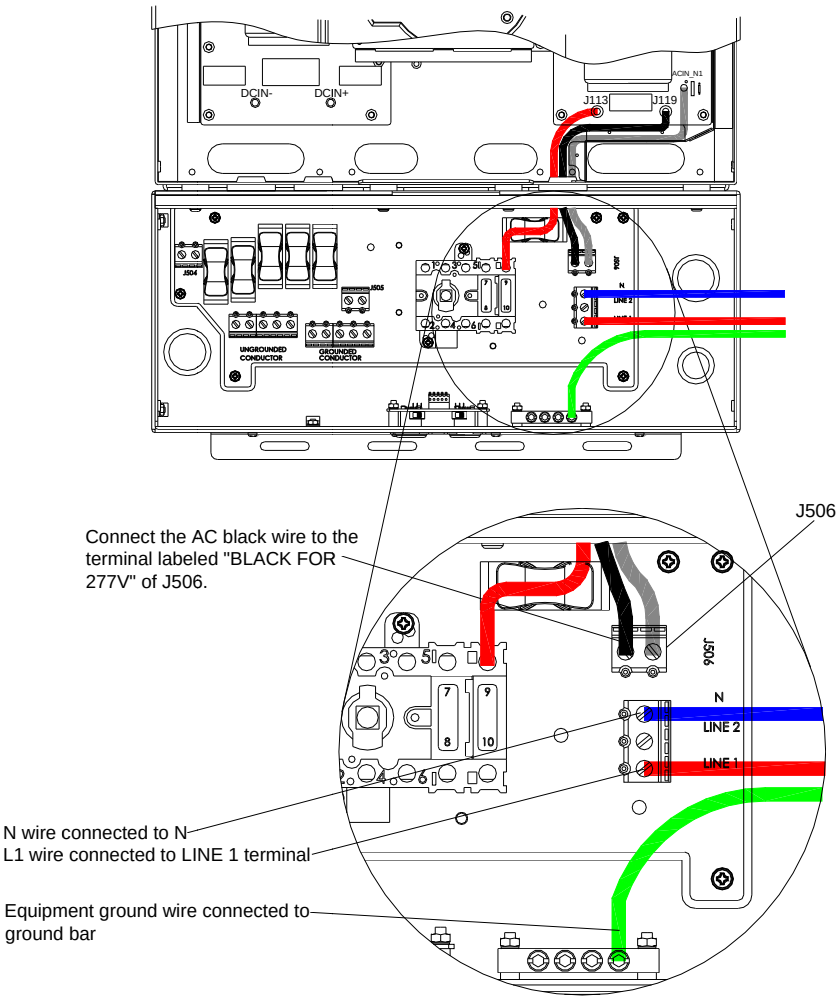

Fig 2.4.2.1 AC Terminal Block for AC wire connections with 277VAC

- Connect the AC equipment GND wire to the screw on the ground bar labeled with stamp
- Connect the black AC inverter wire to the terminal labeled “BLACK FOR 277V” on J506 terminal block
- Connect the L1 wire to the terminal labeled Line1 on the AC terminal block.
- Connect the neutral wire to the terminal labeled N on the AC terminal block.
- Tighten the screws with a torque of 15.6 in-lb (1.7Nm)
- Reconfirm that all connections are correct as described above and all screws are properly tightened.

2.5 Connection of the DC wiring

CAUTION!
PV arrays are energized when exposed to light. Use safe working practices when working on PV arrays.

WARNING! EXTREME SHOCK AND FIRE HAZARD!
REMOVE ALL PV STRING FUSES BEFORE WIRING DC CONNECTIONS! DO NOT REINSTALL FUSES UNTIL YOU ARE READY TO COMMISSION THE INVERTER (SEE COMMISSIONING SECTION AND PROCDURE).

WARNING!
DO NOT USE PV STRING FUSES LARGER THAN 20A! The PV strings must have a name plate short circuit current of less than 9.6A.

CAUTION!
PVI 6500-7500 inverters are listed to have no DC backfeed current. However, all other external source circuits and array wiring ampacity should be taken into account by system installers when determining the proper rating of PV string fuses, or a fire hazard may be present if there is short circuit in a PV string.

WARNING!
Verify the polarity and the open circuit voltage from the PV strings before you connect the DC wires to the inverter. Applying an open circuit DC input voltage that exceeds the maximum DC input voltage range will cause irreversible damage to the inverters and void the warranty! Always configure the DC input voltage range correctly before connecting the DC input wires from the PV array to the inverter.

Before any DC wiring is attempted within the wiring box, **REMOVE ALL PV STRING FUSES.**
The wiring box of the PVI 6500/7500 inverter is designed with a pair of the DC terminal blocks which support up to five (5) independent PV strings to be fused and connected in parallel and then fed into the inverter. The PVI 6500-7500 inverters are shipped with five 15A, 600Vdc rated PV string fuses in the wiring box. However, the size of the PV string fuses shall be determined by the electrical ratings of the PV module and by code requirements. **IN NO CASE SHALL FUSES OF LARGER THAN 20A BE USED IN THE PV STRING FUSE HOLDERS.** Please refer to Section 5.3 for the replacement of the PV string fuses. The integrated fused combiner is able to be bypassed using the provided bypass terminals.
There are two (2) terminals, labeled “Ungrounded Conductor” and “Grounded Conductor”, located in the wiring box used for the DC connections as shown in Figure 2.5.1.1. The DC equipment ground wire shall be connected to a screw on the ground bar labeled ⏚ in the wiring box of the PVI 6500/7500 inverter. All the screws shall be tightened with a torque of 15.6 in-lb (1.7Nm).

2.5.1 Connection of the DC wires for Negatively Grounded Arrays

The inverter is shipped a with negatively grounded setting (factory default). The positive polarity of the DC input voltage from the PV string shall be connected to the terminal labeled UNGROUNDED CONDUCTOR and the negative polarity of the DC input voltage from the PV string shall be connected to the terminal labeled GROUNDED CONDUCTOR as shown in the figure 2.5.1.1 below.

The negatively grounded setting is when the black DC wire is connected to the terminal labeled “C” of J505. The red DC wire is connected to the terminal labeled “D” of disconnect switch.

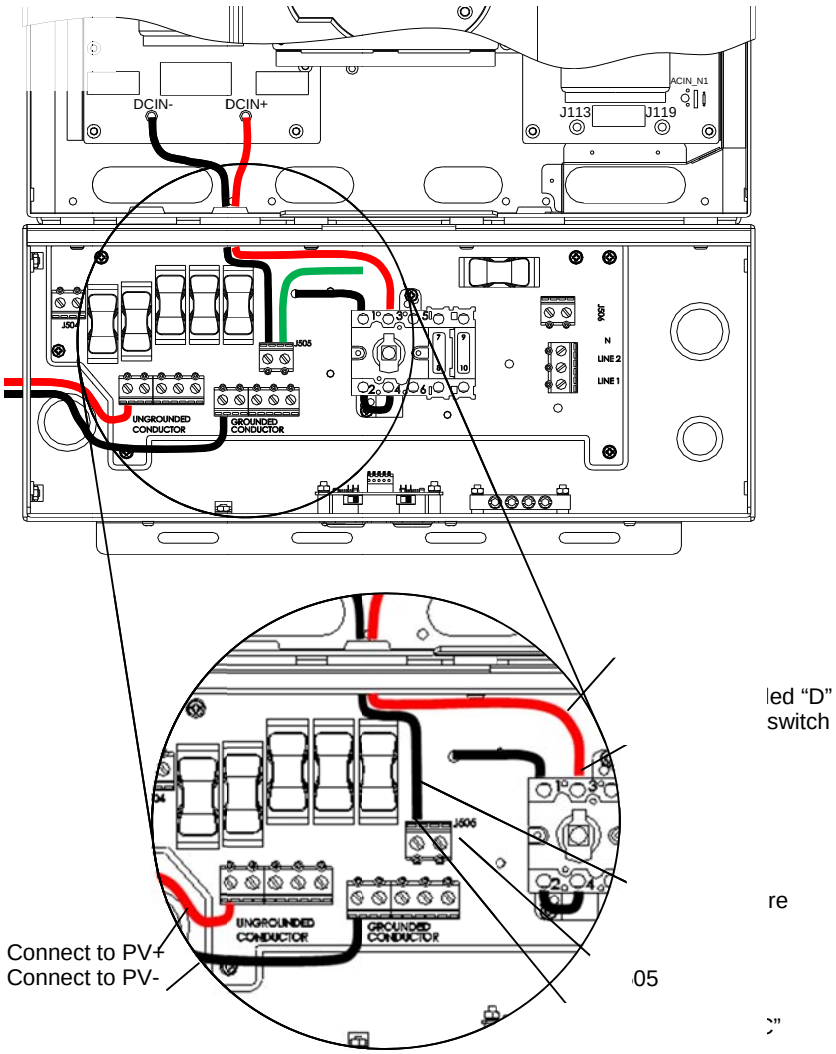

Fig 2.5.1.1 DC Terminal blocks and connections using string fuses for negatively grounded systems

- The positive (+) wire of the DC input shall be connected to the terminal block labeled "Ungrounded Conductor" and the negative (-) wire of the DC input shall be connected to the terminal labeled "Grounded Conductor", except when using positively grounded modules. In that case, see Appendix D at the end of this manual for further instruction.
- Wire nuts shall not be used to join any wires together or to make any connections anywhere in the PV system except where acceptable by code. Wire nuts are a frequent cause of unreliable connections, resistive connections, and ground faults and are not allowed in certain applications by code.
- Connect the equipment ground wire to the screw of the ground bar labeled. ⏚
- Tighten the screws to a torque of 15.6 in-lb (1.7Nm).

2.5.2 Connection of the DC wires for Negatively Grounded Arrays without Internal DC Fuses

When external DC string fuses are used, the PVI 6500/7500 inverter provides a bypass of the internal string fuses. In this case the positive polarity of the DC input voltage from the PV string shall be connected to the terminal labeled "UNGROUNDED

CONDUCTOR (WITHOUT STRING FUSES)" of J504 and the negative polarity of the DC input voltage from the PV string shall be connected to the terminal labeled "GROUNDED CONDUCTOR" as shown in the figure 2.5.2.1.

The negatively grounded setting is that the black DC wire is connected to the terminal labeled "C" of J505, and the red DC wire is connected to the terminal labeled "D" of disconnect switch.

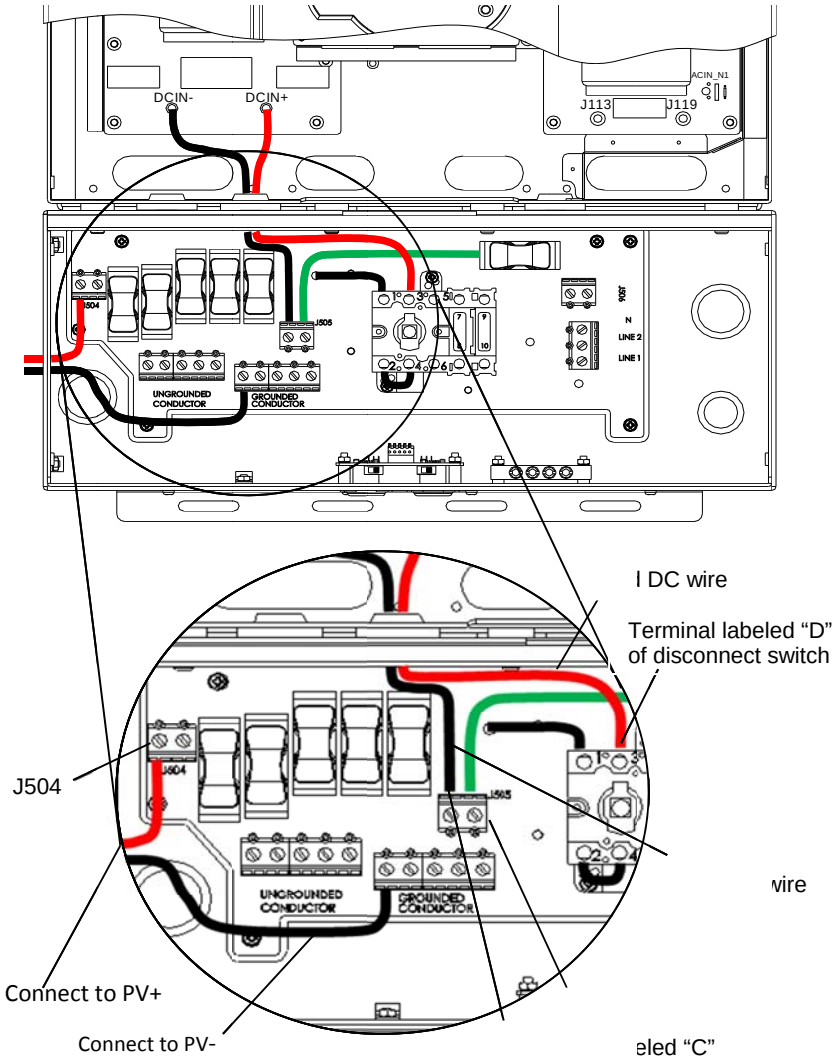

Fig 2.5.2.1 DC Terminal blocks and connections <u>without string fuses</u> (using "J504" bypass terminal) for negatively grounded systems

CAUTION!
Even though the internal DC fuses are not used, hazardous voltage is still present on the fuse holders. The fuse puller must be kept in the fuse holder with the (unused) fuse to reduce the risk of electrical shock.

WARNING!
Protect the DC wires to the PVI 6500-7500 inverters from any possible hazards that could damage the wires (such as sharp corners, edges, or near covers where wires could be pinched or crushed).

WARNING!
Hazardous voltage is still present on the inverter after disconnection of all PV DC inputs. Allow 5 minutes for the inverter to discharge the DC voltage completely.

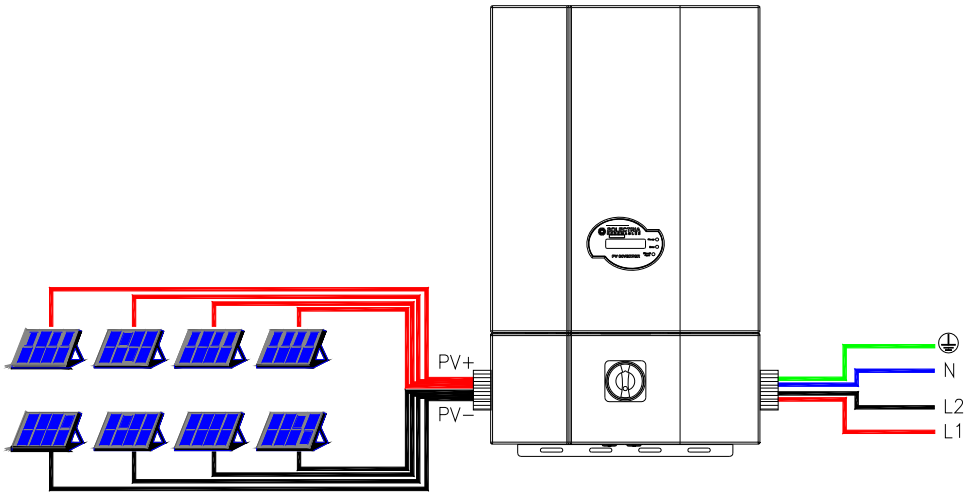

Fig 2.5.2.2 PV- String connections and AC connections

2.5.3 Wiring inverters in parallel

PVI 6500-7500 inverters can be connected in parallel when more power is needed. In the parallel configuration, each inverter shall connect to its own PV array. Do not connect one PV array to more than one inverter. This may cause the inverter to work abnormally. The Figure 2.5.3.1 on the following page shows the connections between inverters and PV arrays in parallel configuration. It is recommended balancing practice to alternate phase connections when connecting more than two inverters to the same three phase service.

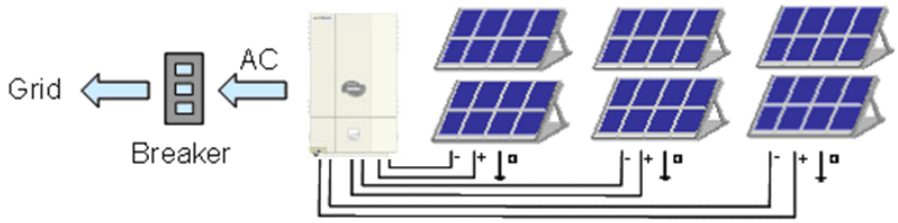

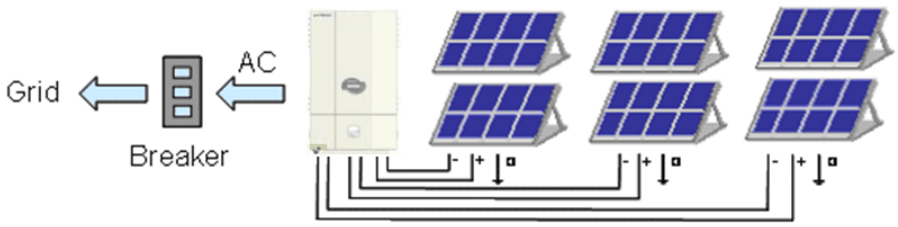

Correct Configuration from DC Side

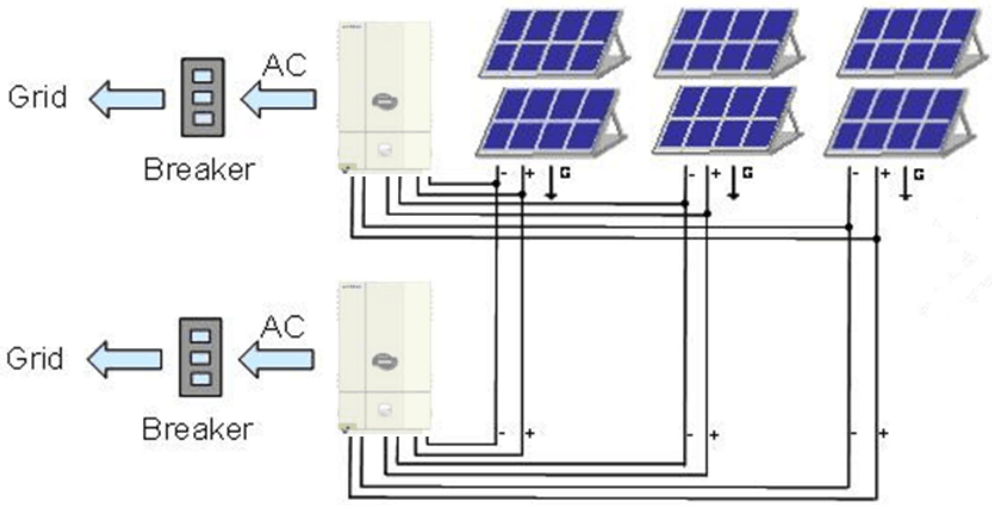

Incorrect Configuration from DC Side

Fig 2.5.3.1 Parallel configuration of inverters is done on the AC side not the DC side.

2.6 Connection of Communication wiring

The PVI 6500-7500 inverter supports two common data interface standards, RS-232 and RS-485 that will be used to communicate to a Solectria communication gateway. Only one of the communication interfaces can work at a time. As shown in the Figure 2.6.1, there are two RJ-45 connectors, RJ45-R and RJ45-L that are located on the bottom of the wiring box. The pin numbers of the RJ-45 connectors and the corresponding signals are described in the Figure 2.6.2 below. If the RS485 is used as the external communication interface and the inverter is the last device in the RS485 loop, then the termination switch shall be put to the ON position (shown in the figure 2.6.1). The installer needs to open the front cover of the wiring box to switch the termination switch into the ON position. The termination switch is set to the OFF position per default.

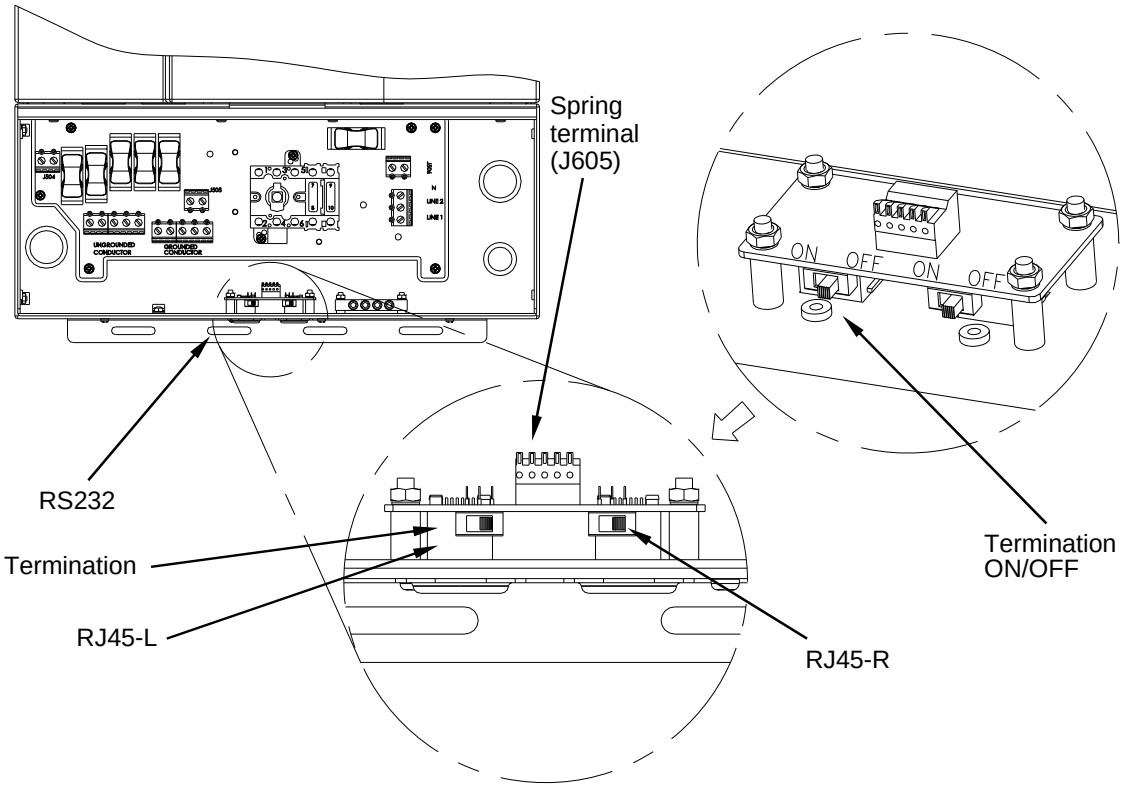

Fig 2.6.1 Positions of the communication ports and termination switches

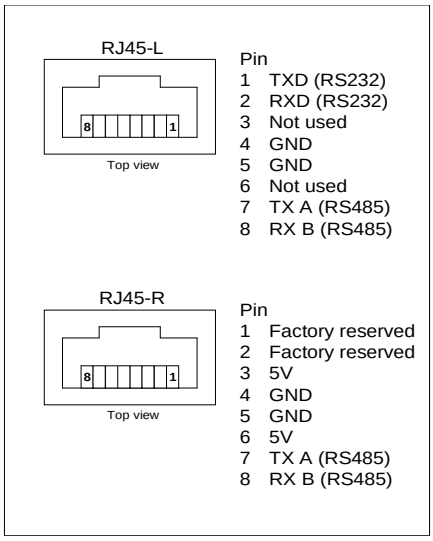

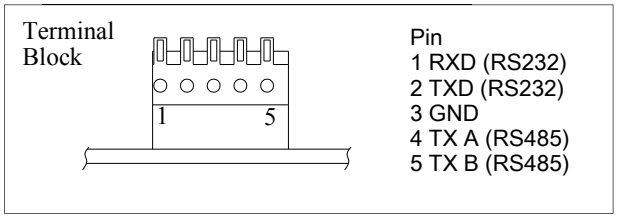

Fig 2.6.2 RJ-45 Pinouts and Signals

As shown in the Figure 2.6.2, the RS-232 signal pins, TXD and RXD, are in the RJ45-L connector. Therefore, only the RJ45-L can be used to connect to when the RS-232 interface is selected

If RS-485 interface is selected, both RJ-45 connectors will be used for the daisy-chained/cascaded RS-485 connections shown in the Figure 2.6.3.

Standard Cables available for RS232 & 485 communication for PVI 3000 through PVI 7500

Description	Part Number	Typical Use	Length
Cable, RS485 comm. PVI 3000-7500	WIH-020082	RS485 cable for communication gateways	7 ft
Cable, RS485 daisy chain PVI 3000-7500	WIH-020081	RS485 jumper cable, for 3000-7500 inverter-to-inverter	30 in.

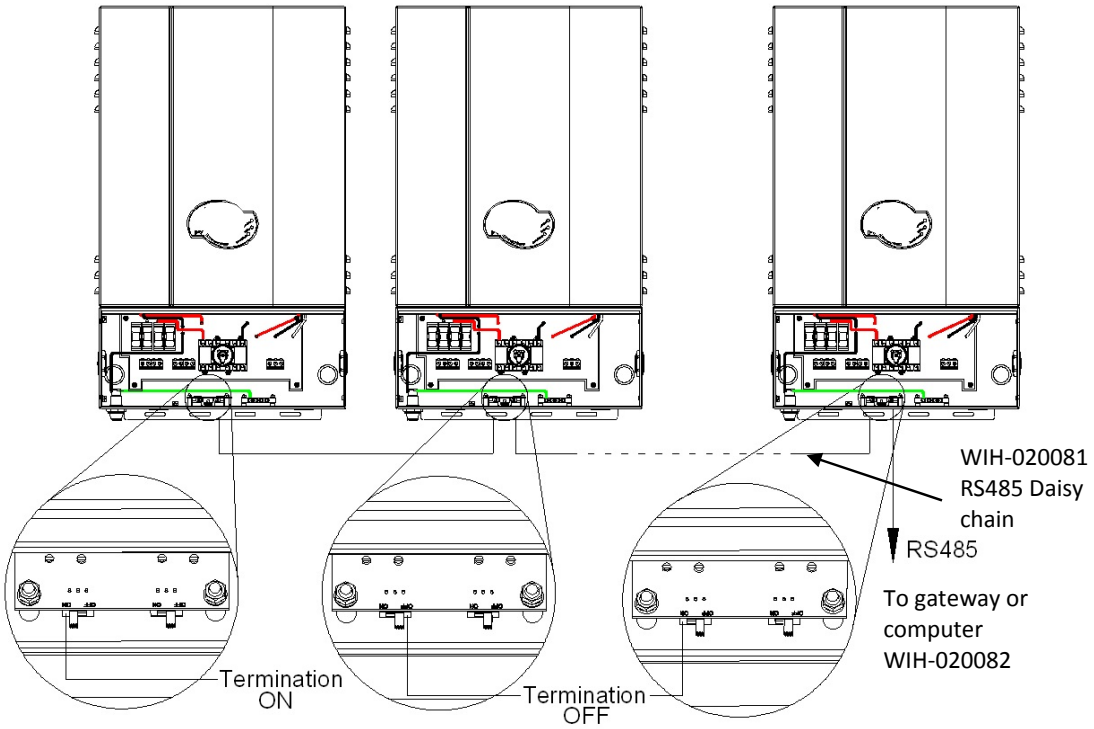

Fig 2.6.3 RS-485 connection

Standard Ethernet patch cables are not compatible with the inverters, even though the inverters use RJ-45 receptacles and require CAT5e cable, the pinouts are not the same as the Ethernet standard.

2.7 Communication ID adjustment

The RS485 communication ID can be set by two ways. The first way is assign the address value (1-254) by switching each of the switches on. The second way is setting by software, where all of the switches must be set to OFF (0) or ON (255) in which case the ID value will depend on an EEPROM parameter which can be changed by software tools via communication port. When using SolrenView data monitoring use an address between 1 and 16. SolrenView can automatically detect the ID# (see SolrenView manual). Each inverter requires a unique number when connected to a single communication DAS.

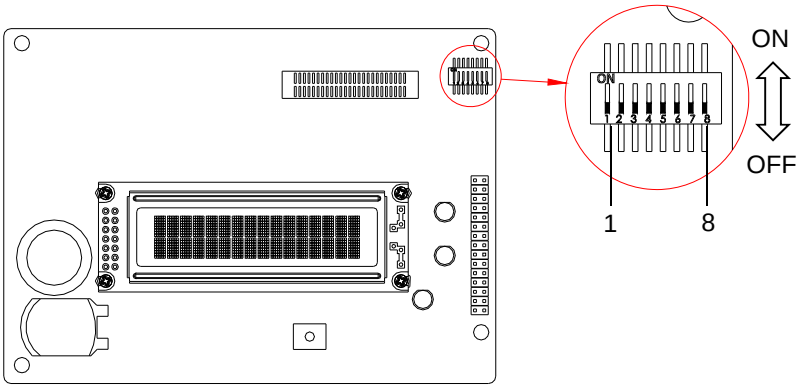

Fig 2.7.1 DIP Switch for RS485 Communication Address

Different ways to set communication ID

Condition	ID Switch (S201)	EEPROM setting (19)	Communication ID
1	1~254	(ignore)	Use ID Switch setting
2	0 or 255	1~255	Use EEPROM setting
3	0 or 255	0 or >255 or EEPROM error	255

ID Switch value (S201)

NO. of ID Switch	1	2	3	4	5	6	7	8	*ID Switch value*
Weighting	bit 0	bit 1	bit 2	bit 3	bit 4	bit 5	bit 6	bit 7	
	1	2	4	8	16	32	64	128	
Example of Setup	OFF	OFF	OFF	OFF	OFF	OFF	OFF	OFF	0
	ON	OFF	OFF	OFF	OFF	OFF	OFF	OFF	1
	OFF	ON	OFF	OFF	OFF	OFF	OFF	OFF	2
	ON	ON	OFF	OFF	OFF	OFF	OFF	OFF	3
	ON	ON	ON	ON	ON	ON	ON	ON	255

3 Commissioning the Inverter and PV System

Ensure that the inverter is mounted, all connections are made and you are ready to power it up before continuing with this section.

NOTE: Make sure all tools, parts, etc. are removed from the vicinity of the inverter before turning it on.

WARNING: Make a final check for correctness of all AC and DC wiring to the inverter and in the system.

NOTE: With the PV modules connected and the inverter disconnect still in the off position, it is good practice to check PV polarity once more simply by carefully using a 600V, DC rated CAT III digital volt meter and probing the positive (+) and negative (-) PV connections on the terminal blocks in the wiring box.

Turning on the inverter for the first time:

- **STOP! CHECK YOUR WIRING:**

WARNING! EXTREME SHOCK AND FIRE HAZARD!
FAILURE TO FOLLOW THE FOLLOWING PROCEDURE CAN RESULT IN SERIOUS SHOCK, FIRE DAMAGE AND WILL VOID INVERTER WARRANTY!

-

WARNING! ARC FLASH HAZARD!
ALWAYS WEAR APPROPRIATE PERSONAL PROTECTIVE GEAR WHEN WORKING ON ENERGIZED CIRCUITS!

  - **REMOVE WIRING BOX COVER, Watch for live terminals and fuse holders.**
  - **PV STRING FUSES SHOULD NOT BE INSTALLED AT THIS POINT (If they are installed, STOP! and see the section "Replacing PV Fuses" in the Maintenance section at the end of this manual)**
  - **CHECK DC VOLTAGES OF ALL STRINGS USING 600V DC METER**
    - **MEASURED VOLTAGES SHOULD BE OPEN CIRCUIT VOLTAGE; IF THE MEASURED VOLTAGE IS AT OR CLOSE TO 0.0V, THEN STOP! AND RECHECK YOUR WIRING TO ENSURE THERE IS NOT A DEAD SHORT.**
  - **CHECK DC POLARITY OF ALL STRINGS USING 600V DC METER**
    - **MEASURED VOLTAGES SHOULD INDICATE POSITIVE READINGS WHEN THE "RED" PROBE OF YOUR METER IS ON THE UNGROUNDED TERMINAL AND THE "BLACK" PROBE OF YOUR METER IS ON THE GROUNDED TERMINAL (except for positively grounded systems, in which case see Appendix D at the end of this manual). IF THE MEASURED VOLTAGES INDICATE A NEGATIVE POLARITY, THEN STOP! AND RECHECK YOUR WIRING TO ENSURE THE POLARITY OF THE STRINGS IS CORRECT.**
  - **ONCE THE VOLTAGES AND POLARITIES ARE MEASURED AND CONFIRMED TO BE CORRECT, INSTALL THE PV STRING FUSES.**

- Unlock and turn on the dedicated 2-pole circuit 240/208VAC circuit breaker on the home/building electrical panel (or 1-pole breaker for 277VAC)

- Unlock and turn on the system AC disconnect (if the system is equipped with additional AC disconnect)

- Turn on the DC/AC disconnect on the inverter.

- Watch the LED indicators for initialization (all three LEDs on) and LCD messages.

- Watch for blinking green LED and LCD messages indicating a 5-minute connect to grid countdown. Following this time, the inverter will come on-line and begin to feed power into the AC circuit.

- Lastly, look for a steady green LED, indicating the inverter is now operating at the Maximum Power Point of the array. See LCD section (4) of manual for detailed description of messages and indications.

Operation:

The control electronics will be active as soon as DC (PV) voltage reaches 200VDC. The inverter will connect to the utility/building grid when the DC voltage first exceeds 260VDC (strike voltage). Next, the inverter will load the array, bringing the DC voltage down from 260VDC to no less than 230VDC.

Once there is enough PV power at 230VDC to feed back AC power, the inverter will automatically start to do so.

Operating states, GFDI status and error indications shown by the LED indicators, as well as LCD data, mode and error codes are described in chapter 4, “Power, GFDI, Error LED Indicators and LCD Display”.

Tesla, Inc.
Ex - 1014
Page 47 of 86

4 Power, Ground Fault, Error LED Indicators and LCD Display

The inverter operates automatically without the need for user interaction or maintenance.

The PVI 6500-7500 automatically starts feeding AC power into the grid every morning as the sun rises, as soon as sufficient DC voltage and PV power is available. The inverter microcontroller runs through various checks before going online with the grid and feeding power into the grid.

4.1 Power, Ground Fault and Error LED Indicators

There are three light-emitting diodes (LEDs) mounted on the front of the inverter to show the operating condition of the inverter (to the right of the LCD display).

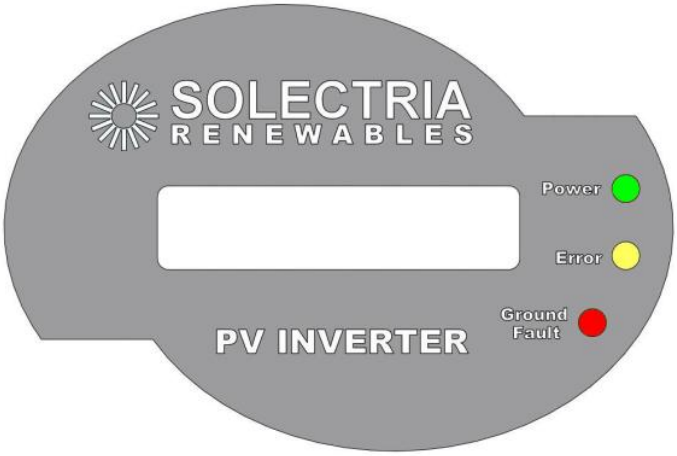

Fig. 4.1.1 Power, Error, and Ground Fault Indicator LEDs and LCD Display

The green LED "Power" shows the current operating condition.

The yellow LED "Error" indicates whether there is an internal or external fault present and whether the AC grid back-feed has been interrupted.

The red LED "Ground Fault" shows if a ground fault is present.

Description of LED symbols used to indicate LED status in this manual

○ LED ON

● LED OFF

X Not relevant / Inconsequential

☼ LED ON 0.9 second/OFF 0.1 Second

¤ LED ON 0.1 second/OFF 0.9 Second

◐ LED ON 0.25 second/OFF 0.25 Second

LED Indication Table

LED indicators		Operating status	Description
Green Yellow Red	¤ ¤ ¤	Initialization	The PVI 6500-7500 is initializing.
Green Yellow Red	¤ ● ●	System Check mode	The inverter is in System Check mode.
Green Yellow Red	¤ ● ●	Monitor mode	The inverter is in Monitoring mode.
Green Yellow Red	○ ● ●	Grid/MPP mode	The inverter is feeding power back to the grid.
Green Yellow Red	☼ × ●	Power Limit	Power Limit mode.
Green Yellow Red	× ☼ ●	Warning	Warning is detected.
Green Yellow Red	¤ ● ●	Low Insolation (solar irradiation)	The inverter is in low insolation (solar irradiation).
Green Yellow Red	● ○ ×	Fault mode	The inverter is in Fault mode.
Green Yellow Red	● × ○	Ground Fault	A DC ground fault was detected.
Green Yellow Red	○ ○ ×	Idle mode	The inverter is in idle mode.
Green Yellow Red	● ● ●	Night Time	There is no DC power coming from PV array. System is powered off.

4.2 The LCD Display

The PVI 6500-7500 is supplied ready to operate. There are no user settings, which need to be made before power can be fed back into the grid. The device comes with a standard LCD display on which various data can be read. All LCD display values have accuracy tolerances of up to ± 5%.

The PVI 6500-7500 has a 16 x 2 LCD to show the operating status, input/output data, and system messages. As long as the DC input voltage is above the preset threshold value, the LCD continues to display the information following the process flow illustrated in the Figure 4.2.1.

The process flow may follow the **operating mode**, **fault mode**, or **idle mode**. The operating mode is when the system goes from power-on to **system check**, **monitoring**, and then **grid feeding mode** without any fault condition detected. If a fault condition that cannot be automatically be cleared is being detected during system check and monitoring mode, the system will wait in the fault mode until the fault condition goes away. If a fault does not get cleared on its own, then the system will enter the idle mode and will need a service person to clear the fault and manually reset the system. These three modes are illustrated in Figure 4.2.1 later in this section.

The following figures explain how the display works in the **operating mode**.

When the DC input voltage goes above the pre-set threshold value, the inverter is powered up and will show the manufacturer's name and model (PVI 7500 in this example) on the LCD as shown below.

After 3 seconds, software versions of two embedded CPU's, Sequential and Current controllers, will be displayed on the LCD. Next in the boot-up sequence, the serial number (S/N), the baud rate (BR) / address (ID) for the communication port will be displayed.

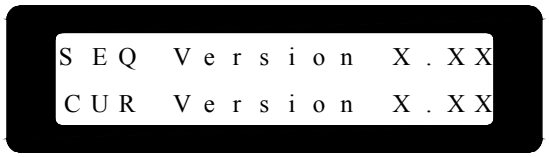

3 seconds ↓

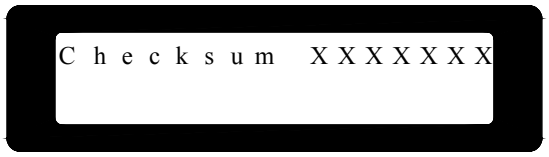

3 seconds ↓

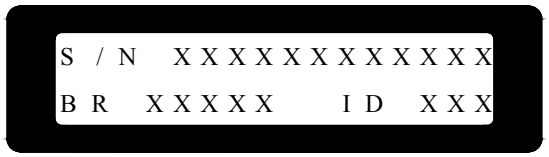

3 seconds ↓

Three (3) seconds later, the inverter displays the setting of the nominal grid voltage configuration. The grid type setting of 208/240/277 with neutral is used as the display example shown below. For the grid type setting, please refer to section 2.3 "Wiring the Inverter".

Tesla, Inc.
Ex - 1014
Page 50 of 86

```
Grid Type
L1 120V  L2 120V
```

3 seconds ↓

If the grid type is set to 240 VAC without neutral, then the display will be looked as the figure shown below.

```
Grid Type
L1-L2        240V
```

3 seconds ↓

Three (3) seconds later, the LCD will show the voltage setting for the inverter to drop the grid connection. The settings of the Vl-nH and its clearing time will be displayed. The Vl-nH setting is the phase-to-neutral (rms) high threshold voltage setting at which point the inverter disconnects its output from the AC power grid when abnormally high phase-to-neutral AC voltage is detected. After the setting of the Vl-nH is displayed, the setting of the Vl-nL will be displayed for 3 seconds.

```
Vl-nH      XXX.XV
Clrt <     XXX Cycs
```

3 seconds ↓

```
Vl-nL      XXX.XV
Clrt <     XXX Cycs
```

3 seconds ↓

Three (3) seconds later, the inverter displays the setting of the VacH which is the phase-to-phase (rms) high threshold voltage setting at which point the inverter disconnects itself from the grid when abnormally high phase-to-phase AC voltage is detected. Also, the setting of the clearing time which is the total duration of time to disconnect the output from the AC grid is displayed. This delay is necessary to avoid nuisance trips. After the settings of the VacH and its clearing time, the settings of the VacL and its clearing time will be displayed for three (3) seconds. The display Vl-nH/Vl-nL is only for 208/240/277VAC with neutral setting, VacH/VasL is only for 240 or 208 without neutral, they would not display at the same time.

```
VacH       XXX.XV
Clrt <     XXX Cycs
```

3 seconds ↓

```
VacL       XXX.XV
Clrt <     XXX Cycs
```

3 seconds ↓

Then the high and low threshold settings of the AC frequency and the associated clearing time will be shown for three (3) seconds. When the AC frequency exceeds the high or low threshold setting, the inverter will disconnect its output from the AC grid.

```
FacH        XX.XXHz
Clr t <  XXX  Cycs
```

3 seconds ↓

```
FacL        XX.XXHz
Clr t <  XXX  Cycs
```

3 seconds ↓

Then the LCD will display the setting of the AC high voltage limit above which value, the inverter will reduce the output power until the AC voltage drops within this setting. If the grid type is set to 208/240/277VAC with neutral, the display will appear as shown below.

```
VacH  Limit
L-N           XXX.XV
```

3 seconds ↓

Then, the setting of the reconnection time will be displayed. The reconnection time is the duration of delay time for the inverter to reconnect to the grid after the fault(s) is(are) cleared.

```
VpvStart  XXX.XV
Reconnect   XXXs
```

3 seconds ↓

System Check mode

After the basic information of the inverter is displayed, the system enters the **System Check mode** which is indicated on the LCD.

```
Mode
System Checking
```

During the system checking, if the DC input voltage does not reach the point of the PV start voltage setting, then the following message will be shown on the LCD. The system will stay in this state until the PV start voltage is reached.

```
Low Insolation
```

If the grid is not connected during the system check, the inverter enters the fault mode and the following message will be shown on the LCD.

```
Mode          Fault
Grid  NA
```

Monitoring Mode

Once system check is completed, the inverter goes into the **monitoring mode**. Even if all measurements needed for grid feeding are in the acceptable range, the system will keep monitoring these measurements for a period of time. The following information tells users that the system will go into the grid feeding mode in XXX seconds and then show the measured data of the DC input voltages and the existing voltage and frequency on the grid side.

```
Mode     Monitoring
NextConnect   XXXs
```

3 seconds ↓

```
Vpv            XXX   V
```

3 seconds ↓

```
Vac          XXX.XV
Fac            XX.XHz
```

3 seconds ↓

If the DC voltage falls under the PV start voltage, during the monitoring mode, the system stays in this mode and shows the information as follows. The system will still keep measuring the parameters of both DC and AC and displaying them on the LCD.

```
Mode     Monitoring
Low      Insolation
```

3 seconds ↓

```
 Vpv            XXXV
```

3 seconds ↓

```
Vac          XXX.XV
Fac            XX.XHz
```

3 seconds ↓

If measurements stay within acceptable range the system enters the **grid feeding mode**; the LCD will show the following information in the given order and repeat this until the system goes to another operating mode.

The first screen shows the current operation mode.

Tesla, Inc.
Ex - 1014
Page 53 of 86

```
Mode
Grid/MPP
```

3 seconds ↓

The first two messages are about the PV array and output voltages and power. Vpv is the incoming DC voltage from the PV array. Wpv is the incoming power of the PV array in Watts. Vac, Pac, Iac, and Fac are the voltage, power, current, and frequency at the inverter output.

```
Vpv        XXXV
Wpv       XXXXW
```

3 seconds ↓

```
Vac       XXX.XV
Pac        XXXXW
```

3 seconds ↓

```
Fac       XX.XHz
Iac       XX.XA
```

3 seconds ↓

The next message shows the accumulated energy in kWh and number of running hours since the inverter has been powered on for the day.

```
Etoday  XXX.X  kWh
Htoday   XX.X  Hr
```

3 seconds ↓

The next message shows the total accumulated energy in kWh and period of time in hours since the inverter has been installed and operated for the first time.

```
Eac  XXXXXX.X  kWh
H        XXXXX  Hr
```

3 seconds ↓

Power Derating Message

There are five possible **derating messages** which will be shown if the power is derated during grid feeding mode. Only one derating cause is displayed at a time. When “Temp” message is present, the power derating is caused by an over temperature of the heat sink. The “Ipv” message shows that the power derating is caused by restricting the DC input current to the maximum limit. The “Iac” and “Pac” messages illustrate the power derating is caused due to a restriction of the maximum output AC current and power. The “VacH” message shows that the power derating is caused by high AC voltage.

Tesla, Inc.
Ex - 1014
Page 54 of 86

Warning Messages

There are three possible **warning messages** that may be displayed to indicate failures. These messages can only occur in grid feeding mode. When EEPROM message is displayed, the system is unable to access the EEPROM. The COMM message means a failure of the communication function. The FAN BLOCK message shows that the fan has stopped running. These warnings could appear one after the other. Call the Solectria Renewables customer service hotline for resolution.

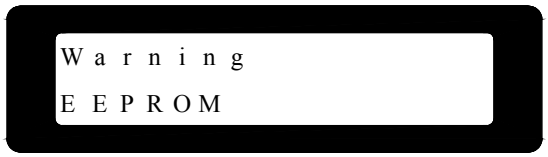

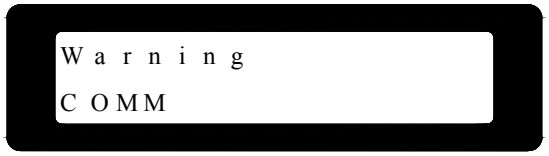

Tesla, Inc.
Ex - 1014
Page 55 of 86

Fault Mode

The **fault mode** messages are as follows. Fault mode, serial number of the inverter, software versions of the sequential and current controllers are shown and then the error messages which are listed in the Error Message Table in the Troubleshooting section 5,

```
Mode          Fault
S/N  XXXXXXXXXXXX
```

3 seconds ↓

```
SEQ  Version  X.XX
CUR  Version  X.XX
```

3 seconds ↓

```
Mode          Fault
error  message
```

3 seconds ↓

There are several error messages that show the detailed conditions that can cause the system to go into the fault mode, such as the messages shown below that show that the frequency of the AC grid is too high (H) or too low (L). After three (3) seconds, the message shows the present frequency and the frequency that caused the system to go into the fault mode.

```
Mode          Fault
FacX
```

X: H or L
3 seconds ↓

```
Trip at       XX.XHz
Present       XX.XHz
```

3 seconds ↓

The message below shows that the AC voltage is too high (H) or too low (L) and next the inverter displays the AC voltage limit as well as the present AC grid voltage measurement.

```
Mode          Fault
VacX
```

X: H or L
3 seconds ↓

Tesla, Inc.
Ex - 1014
Page 56 of 86

```
Trip at      XXX.XV
Present      XXX.XV
```

3 seconds ↓

The message below shows the PV DC voltage is too high.

```
Mode            Fault
VpvH
```

3 seconds ↓

```
Trip at      XXX.XV
Present      XXX.XV
```

3 seconds ↓

The following message presents that the AC line1 and/or line2 voltage (referenced to the neutral) is/are too high (H) or too low (L).

```
Mode            Fault
VacL1 X     VacL2 X
```

X: H or L

3 seconds ↓

Idle Mode

The **idle mode** messages are as follows. Operating mode, serial number of the inverter, software versions of the sequential and current controllers are shown and then the error messages which are listed in the Error Message Table in section 5.

```
Mode            Idle
S/N  XXXXXXXXXXXX
```

3 seconds ↓

```
SEQ Version  X.XX
CUR Version  X.XX
```

3 seconds ↓

```
Mode            Idle
error message
```

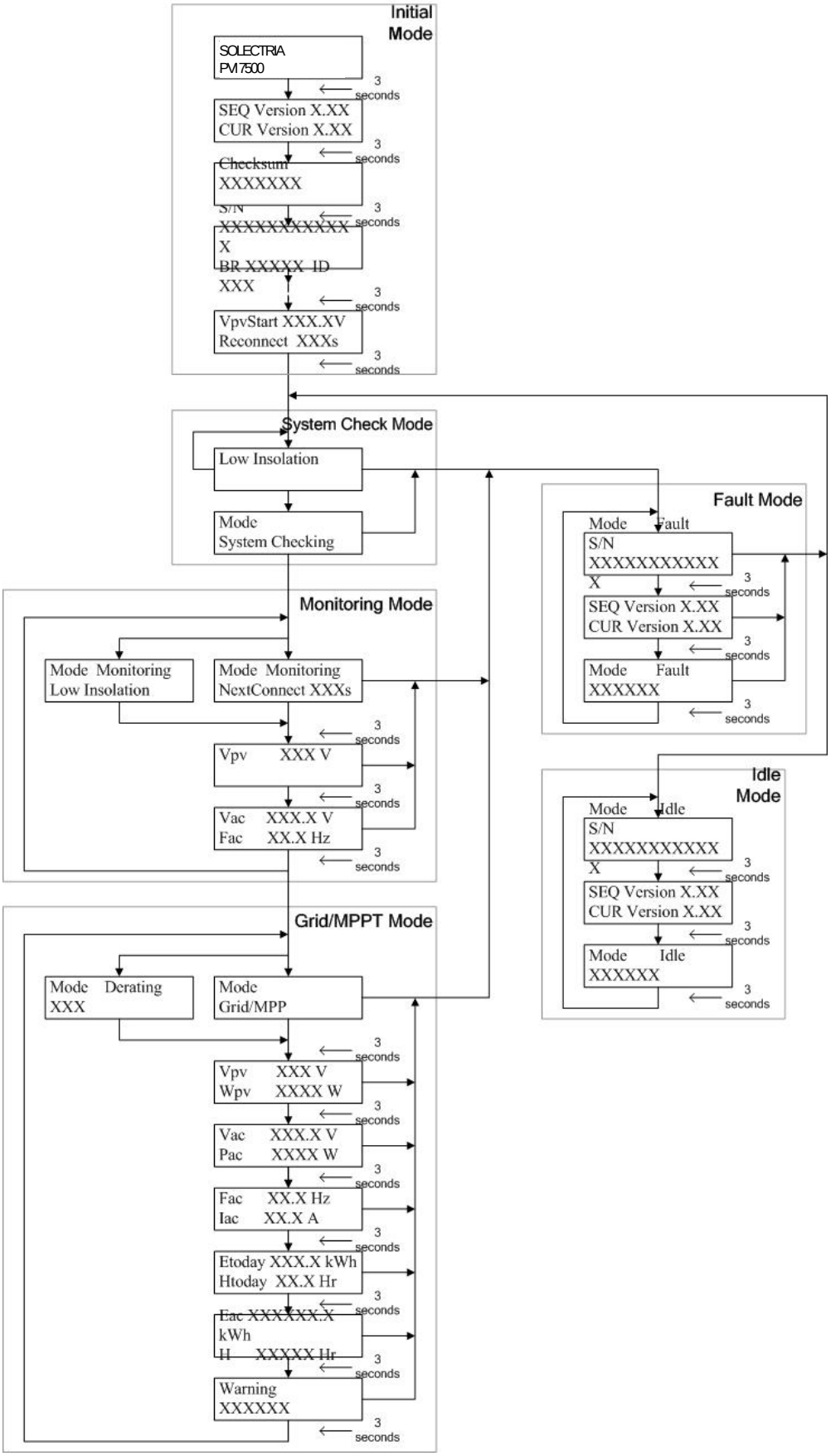

Fig 4.2.1 PVI 6500-7500 inverter LCD display flow-chart

5 Troubleshooting

5.1 Diagnosis and analysing data

Identifying and resolving faults

The PVI 6500-7500 is fitted with a self-diagnostic system, which can recognize the majority of possible faults and show these on the display. This allows the operator to rapidly identify possible problems in the solar inverter or PV system. Please refer to the LCD section (4) for a thorough explanation of fault codes, modes, etc.

Ground Fault:

If a significant ground fault occurs in the PV array or wiring, the GFDI fuse (located in the wiring box) may be blown. If it is, locate and repair the ground fault and only then replace the fuse with Bussmann KLKD1 (1 Amp, 600VDC). Call the Solectria Renewables customer service hotline for assistance with locating a DC ground fault in the array or conduits.

If the GFDI detects a ground fault, the Ground Fault LED will light and the "fault" will be displayed.

Weak Sunlight Condition:

Operation in weak sunlight, (for example early in the morning, when overcast or when snow is covering most or all of the PV array) can cause the inverter to go through a cycle of trying to start and restart several times. This can occur if the array reaches 260V (strike voltage) but there is nearly no power available.

5.2 Explanations of Error Messages

In the event of a fault, the inverter will stop feeding the AC voltage to the building/utility and display the error message on the LCD. Qualified service personnel shall do the analysis, measurement, and debug the system. It is recommended to analyze the fault condition(s) by referring to the table below and then remove the fault condition(s) in order to return the inverter to a normal state and continue to feed AC power to the utility. Please contact Solectria Renewables customer service hotline if the error message does not clear.

WARNING: Certain trouble shooting steps may require work on energized and exposed circuits, only qualified personnel should perform these tasks. Please use Personal Protective Gear when measuring voltage in the inverter.

Error Message Table

Error Message	Description	Possible Solutions
GridNA	No AC voltage is detected.	- Verify AC voltage disconnect is on - Verify AC circuit breaker is on/operational - Verify and measure AC voltage present in Inverter disconnect - Contact installing company or Solectria Renewables
Drift Fac	Islanding is detected.	- Verify AC voltage present and correct in Inverter disconnect - Contact installing company or Solectria Renewables
VacH	The AC voltage of utility is above the upper limit.	- Verify setting for S201 is correct for the grid voltage applied - Measure the AC voltage and compare to the voltage on the inverter display - Contact Solectria Renewables for

		assistance if the range needs to be adjusted
VacL	The AC voltage of main utility is below the lower limit.	- Verify setting for S201 is correct for the grid voltage applied - Measure the AC voltage and compare to the voltage on the inverter display - Contact Solectria Renewables for assistance if the range needs to be adjusted
FacH	The frequency of AC voltage of the utility is above the upper limit.	- Measure the frequency and compare to the frequency on the display - Contact Solectria Renewables for assistance if the range needs to be adjusted
FacL	The frequency of AC voltage of the utility is below the lower limit.	- Measure the frequency and compare to the frequency on the display - Contact Solectria Renewables for assistance if the range needs to be adjusted
VpvH	The DC voltage of PV array is above the upper limit.	- Turn off the inverter disconnect - Measure the VDC at the Inverter disconnect if over 599VDC the solar array needs to be inspected - Contact installing company - Do not turn on the inverter until the condition is repaired
Imax_AC	Over current on the AC side.	- The inverter will continue to operate at a lower current - If message occurs frequently contact the installing company
InvTempMax	The internal temperature of the inverter exceeded the safe operating limit.	- If the inverter is located in direct sunlight it may need to be shaded - The VDC input may be too high causing increased temperature, reduce VDC input. - Contact installing company or Solectria Renewables
Relay Open **Relay Close**	Relay test failed.	- Contact installing company or Solectria Renewables
VacL1 H	The voltage between L1 and neutral is over the upper limit.	- Verify setting for S201 is correct for the grid voltage applied - Measure the AC voltage and compare to the voltage on the inverter display - Contact Solectria Renewables for assistance if the range needs to be adjusted
VacL1 L	The voltage between L1 and neutral is under the lower limit.	- Verify setting for S201 is correct for the grid voltage applied - Measure the AC voltage and compare to the voltage on the inverter display - Contact Solectria Renewables for assistance if the range needs to be adjusted
VacL2 H	The voltage between L2 and neutral is over the upper limit.	- Verify setting for S201 is correct for the grid voltage applied - Measure the AC voltage and compare to the voltage on the inverter display - Contact Solectria Renewables for

		assistance if the range needs to be adjusted
VacL2 L	The voltage between L2 and neutral is under the lower limit.	- Verify setting for S201 is correct for the grid voltage applied - Measure the AC voltage and compare to the voltage on the inverter display - Contact Solectria Renewables for assistance if the range needs to be adjusted
MOV Fault, AC	High voltage protection function failed on the AC side.	- Verify MOV appearance is OK - Contact Solectria Renewables
MOV Fault, DC	High voltage protection function failed on the DC side.	- Verify MOV appearance is OK - Contact Solectria Renewables
GFDI	The GFDI Fuse is open or blown.	- Use DMM to verify GFDI is open contact installing company to inspect and repair the array - Replace fuse with same type and rating
DCInjectCurH	Too much DC current injected into the AC grid is detected.	- Turn off the inverter and restart. - If the error re-occurs Contact installing company or Solectria Renewables
VdcbusH	Internal DC bus voltage is above the upper limit.	- Turn off the inverter and restart. - If the error re-occurs Contact installing company or Solectria Renewables
Internal COMM	Internal communication failed.	- Turn off the inverter and restart. - If the error re-occurs Contact installing company or Solectria Renewables
Watchdog	Internal watchdog function triggered.	- Turn off the inverter and restart. - If the error re-occurs Contact installing company or Solectria Renewables
Idc Test	Offset check for grid monitoring failed	- Turn off the inverter and restart. - If the error re-occurs Contact installing company or Solectria Renewables
Offset	The DC injection current monitoring function failed.	- Turn off the inverter and restart. - If the error re-occurs Contact installing company or Solectria Renewables
Temp. Sensor	Offset check for grid monitoring failed.	- Turn off the inverter and restart. - If the error re-occurs Contact installing company or Solectria Renewables
RAM Test	The internal temperature sensor failed.	- Turn off the inverter and restart. - If the error re-occurs Contact installing company or Solectria Renewables
EEPROM Test	Memory failed	- Turn off the inverter and restart. - If the error re-occurs Contact installing company or Solectria Renewables
System Error	EEPROM test failed.	- Turn off the inverter and restart. - If the error re-occurs Contact installing company or Solectria Renewables
Version Error	The system failed.	- Turn off the inverter and restart. - If the error re-occurs Contact installing company or Solectria Renewables
CPU Delta Fac **CPU Delta Vac** **CPU Delta GFDI** **CPU Delta Idc**	The firmware version is not correct. Internal measurement comparison error or defective hardware	- Turn off the inverter and restart. - If the error re-occurs Contact installing company or Solectria Renewables

GFDI HW Error	GFDI detect hardware failure	- Turn off the inverter and restart. - If the error re-occurs Contact installing company or Solectria Renewables
IpvH	Over current on the DC side	- Use a suitable meter for measuring the current from the array. - Verify the current is within the limits for the inverter. - Contact the installing company to check the array
Driver Fault	Driver circuit or power device failed	- Turn off the inverter and restart. - If the error re-occurs Contact installing company or Solectria Renewables
CalDataError	Calibration data is out of range	- Turn off the inverter and restart. - If the error re-occurs Contact installing company or Solectria Renewables
CalDataLoss	Calibration data is lost.	- Turn off the inverter and restart. - If the error re-occurs Contact installing company or Solectria Renewables
Ibuck Over	Internal converter over current	- Turn off the inverter and restart. - If the error re-occurs Contact installing company or Solectria Renewables
Converter Error	DC/DC hardware failed.	- Turn off the inverter and restart. - If the error re-occurs Contact installing company or Solectria Renewables
ModuleTempMax	Module temperature high	- String sizing design provides too low DC voltage at high module temperature

5.3 Maintenance:

Replacing the GFDI Fuse

Before replacing the fuse, you must switch off the DC/AC disconnect switch and AC breaker and wait for at least 5 minutes for system to discharge. Verify the absence of voltage with a voltmeter. Remove the cover of the inverter wiring box and remove the GFDI fuse holder by pulling the holder towards you and then replace the GFDI fuse with the same type and rating (600VDC, 1A).

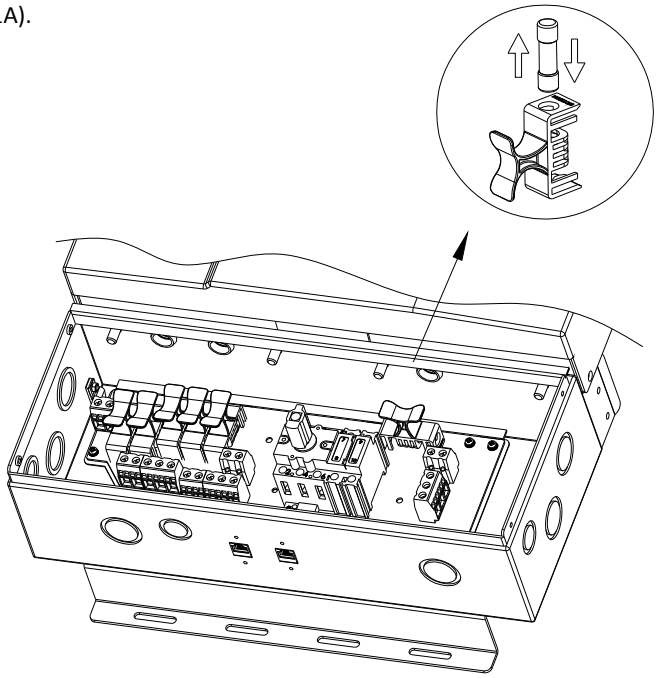

1. Turn OFF all DC/AC disconnect switches and AC breaker
2. Wait for at least 5 minutes
3. Exchange the GFDI fuse
4. Turn ON all DC/AC disconnect switches and AC breaker

Fig 5.3.1 Replacement of the GFDI fuse holder

WARNING!
For continued protection against risk of fire, replace only with the same type and ratings of fuse (600 VDC, 1A)!

Replacing the PV String Fuses

The inverter is shipped with five (5) 15A, 600Vdc PV string fuses for PV strings. However, the size of the PV string fuse is determined by the electrical ratings of the PV module and by UL and code requirements. The minimum size of the PV string fuse is calculated using the short circuit current rating (Isc) of the PV module. Please be sure to consult with the PV module manufacturer for appropriate PV string fuse rating. **IN NO CASE SHALL FUSES OF LARGER THAN 20A BE USED IN THE PV STRING FUSE HOLDER.**

Replacing PV Fuses

- **STOP!**

WARNING! EXTREME SHOCK AND FIRE HAZARD!
FAILURE TO FOLLOW THE FOLLOWING PROCEDURE CAN RESULT IN SERIOUS SHOCK, FIRE DAMAGE AND WILL VOID INVERTER WARRANTY!

- **REMOVE WIRING BOX COVER**
- **CHECK DC VOLTAGES OF ALL STRINGS USING 600V DC METER**
  - **MEASURED VOLTAGES SHOULD BE OPEN CIRCUIT VOLTAGE; IF THE MEASURED VOLTAGE IS AT OR CLOSE TO 0.0Vdc, THEN STOP! AND DO NOT REMOVE ANY FUSES. RECHECK YOUR WIRING TO ENSURE THERE IS NOT A DEAD SHORT OR A STRING WITH REVERSED POLARITY.**
- **CHECK DC CURRENT OF ALL STRINGS USING CLAMP-ON DC METER**
  - **MEASURED CURRENTS SHOULD BE AT OR VERY CLOSE TO 0.0Adc. IF THERE IS A MEASURED CURRENT READING, THEN STOP! AND DO NOT REMOVE ANY FUSES. RECHECK YOUR WIRING TO ENSURE THERE IS NOT A DEAD SHORT OR A STRING WITH REVERSED POLARITY.**
- **ONCE THE VOLTAGES AND CURRENTS ARE MEASURED AND CONFIRMED TO BE CORRECT, REMOVE AND REPLACE THE PV STRING FUSES. NEVER REMOVE A DC FUSE UNDER CURRENT! REMOVING A DC FUSE UNDER CURRENT CAN RESULT IN INJURY AND WILL DAMAGE THE WIRING BOX.**

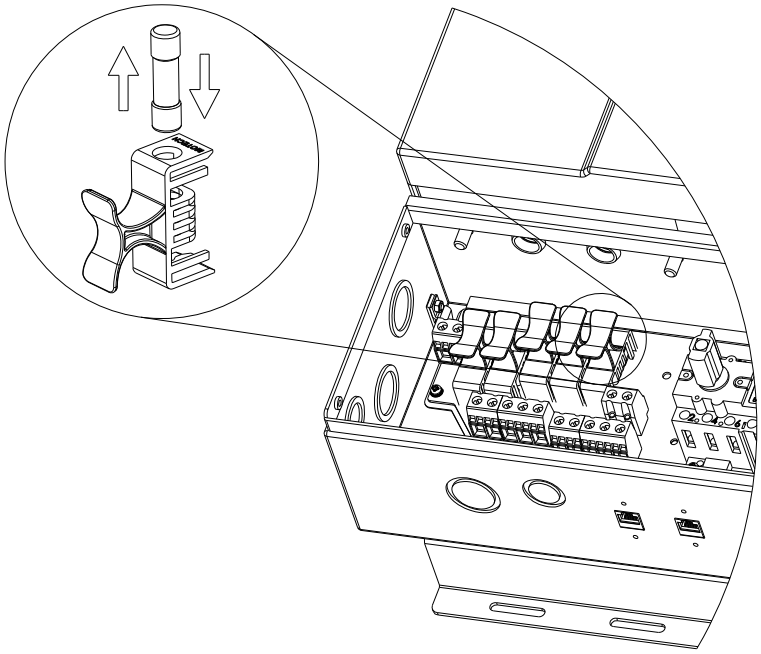

Fig 5.3.2 Replacement of the PV string fuses

WARNING!
PV arrays are always energized when exposed to light therefore hazardous voltage is still present on the terminal blocks and the PV string fuse holders even when the DC/AC disconnect switch is switched OFF. Please cover the PV arrays with opaque materials during PV string fuse replacement.

CAUTION!
The string fuse size must not be greater than the maximum fuse size rating of the PV module provided on the PV module manufacturer data sheet. If no maximum fuse size is indicated, please contact the PV module manufacturer.

5.4 Factory Service

Please contact Solectria Renewables customer service hotline for our documentation on removing and replacing the top inverter section (while leaving wiring box in place).

5.5 Inverter Replacement

Once the product is diagnosed and Solectria determines that it requires Factory Service, the product can be removed and sent back using the original shipping box and packing materials. A copy of the RMA number must be included in the package.

Documentation: There is some documentation that must be provided with the returned product. Please include as much detail as possible.

1. Serial number and part number of the inverter
2. Brief description of system it has been used in and failure circumstances (string sizing, events prior to failure)
3. Fault message on LCD display or fault condition that occurred
4. Can the failure be reproduced? How?

The following sections will describe the steps to remove and subsequent reinstall the inverter with the wiring box remaining on the wall.

5.5.1 Remove the Inverter

The PVI 6500/7500 inverter is designed to be easily separated from the wiring box and removed from the mounting bracket. You must wait for at least five (5) minutes for system to discharge after DC/AC disconnect switch and breakers are switched OFF and locked out before opening the front cover of the inverter to disconnect the wires. Verify the absence of voltage with a voltmeter. Both DC and AC wires that are disconnected from the inverter must be properly terminated with insulating means. After the inverter is removed from the mounting bracket, the holes that the wires on top of the wiring box go through must be covered with the cover plate that is attached at the back of the wiring box to prevent the box from water intrusion, as shown in the figure 5.5.1.7.

WARNING!
PV arrays will be energized when exposed to light. Cover the arrays with opaque material during installation and wiring. Verify the absence of voltage with a DC voltmeter.

WARNING!
Reconfirm that the circuit breaker to the main utility is switched OFF and locked out before disconnecting the power cable from the breaker to the AC terminal block. Verify the absence of voltage with an AC voltmeter.

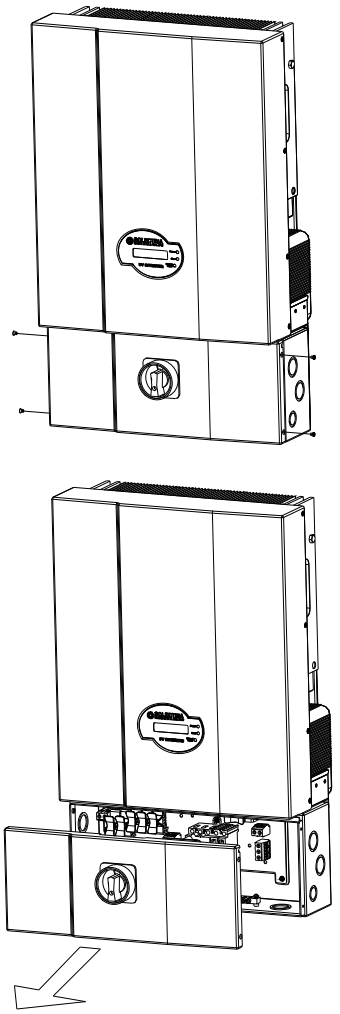

Fig 5.5.1.1 Remove the cover of the Inverter

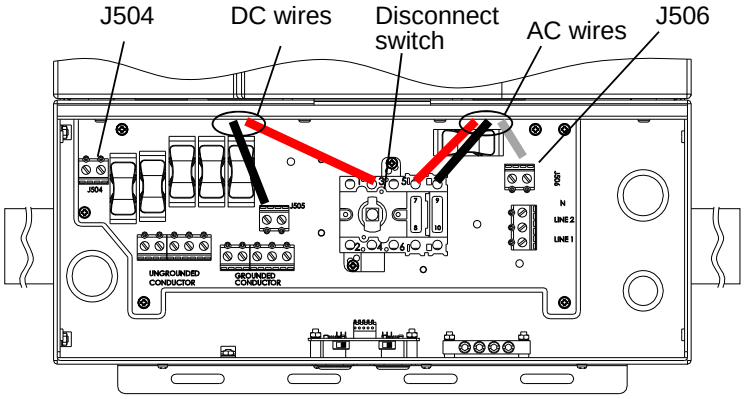

Fig 5.5.1.2 Remove the DC and AC wires

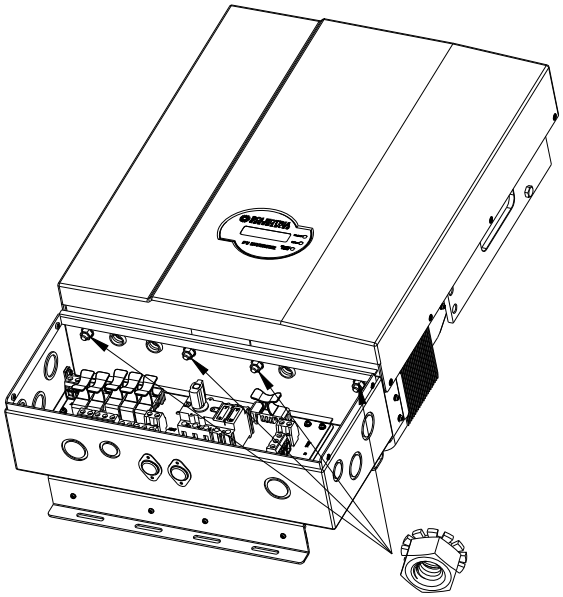

Fig 5.5.1.3 Remove the nuts attaching the inverter and wiring box

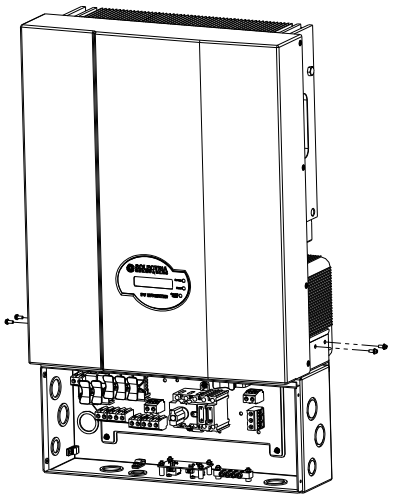

Fig 5.5.1.4 Remove the attachment screws on the sides of the inverter

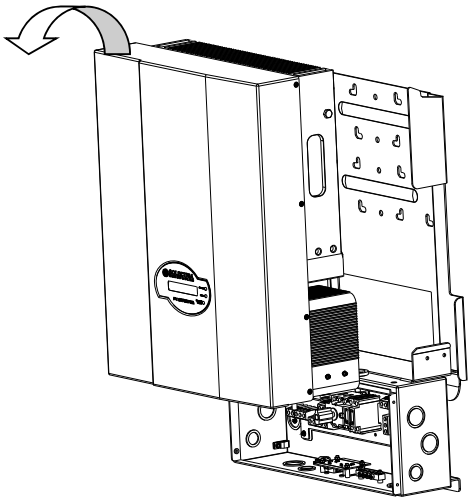

Fig 5.5.1.5 Remove the inverter carefully from the hangers on mounting bracket

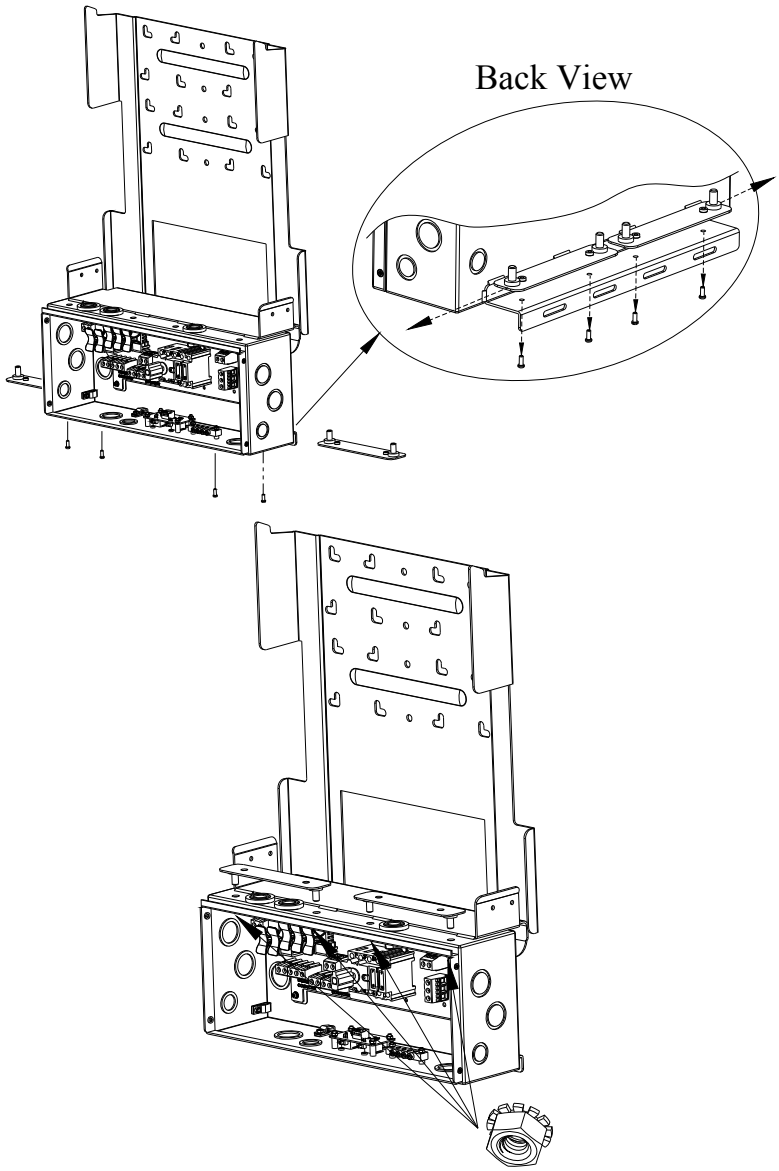

Fig 5.5.1.6 Position the cover plate and fasten the screws

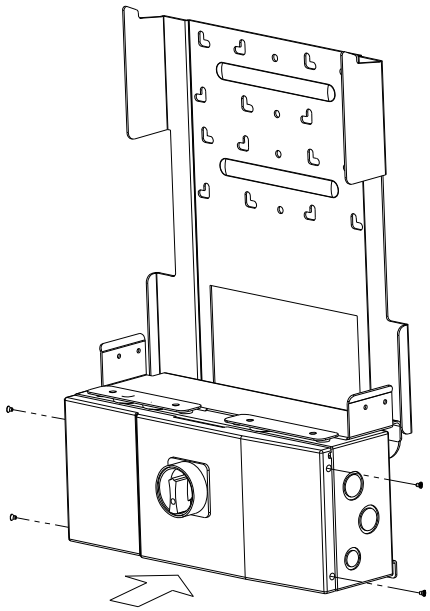

Fig 5.5.1.7 Position the cover plate and fasten the screws

1. Turn the DC/AC disconnect switch to OFF position and turn off and lock out all breakers.
2. Wait for at least 5 minutes.
3. Remove the cover of the wiring box by following the steps described in section 2.3, as shown in the figure 5.5.1.1.
4. Disconnect the red and black DC wires from the disconnect switch and J505 terminal. Disconnect the red, black and white AC wires from the disconnect switch and J506 terminal as shown in figure 5.5.1.2.
5. All disconnected wires must be wrapped with insulating materials to prevent electric shock. Place the disconnected wires inside the wiring box.
6. Loosen the 4 nuts with a 13-mm wrench as shown in the figure 5.5.1.3.
7. Remove the screws bonding the sides of the inverter so that the inverter can be taken apart from the wiring box as shown in the figure 5.5.1.4.
8. Remove the inverter from the mounting bracket as shown in the figure 5.5.1.5.
9. Use the cover plate that is on top of the wiring box to cover the through holes of the wires with the 4 nuts as show in the figure 5.5.1.6.
10. Put the front cover of the wiring box back and fasten the screws as shown in the figure 5.5.1.7.
11. Collect the removed screws in a plastic bag and place aside for reinstalling the inverter in the future.
12. Keep the DC/AC disconnect switch and circuit breakers locked in the OFF position until the inverter is reinstalled, all wires are connected correctly, front covers are replaced and screws are fastened.

5.5.2 Reinstall the Inverter

After reinstallation of the inverter, all wires must be reconnected correctly before the inverter can be returned to service.

WARNING!
PV arrays will be energized when exposed to light. Cover the arrays with opaque material during installation and wiring. Verify the absence of voltage with a DC voltmeter.

WARNING!
Reconfirm that the circuit breaker to the main utility is switched OFF before connecting the power cable from the breaker to the AC terminal block. Verify the absence of voltage with an AC voltmeter.

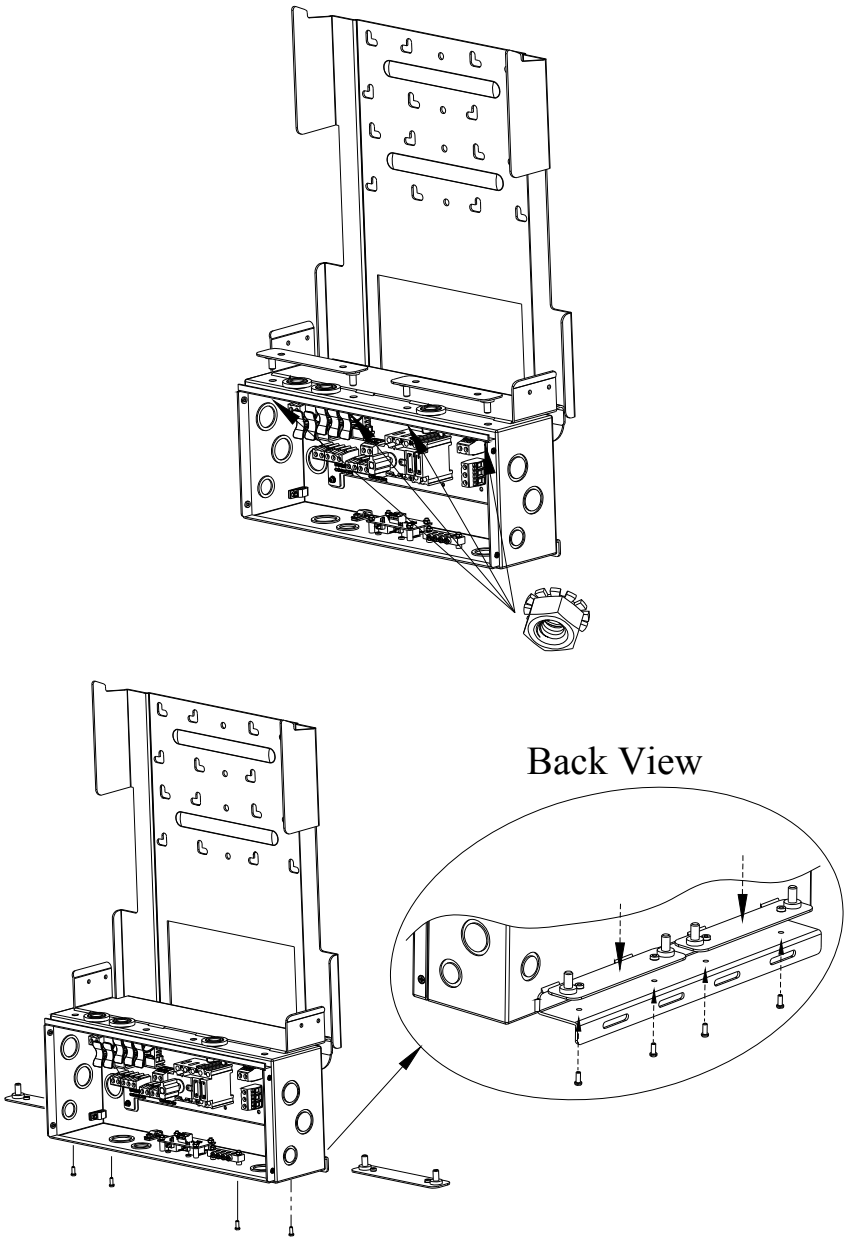

Fig 5.5.2.1 Re-install the cover plate and attach it at the back of the wiring box

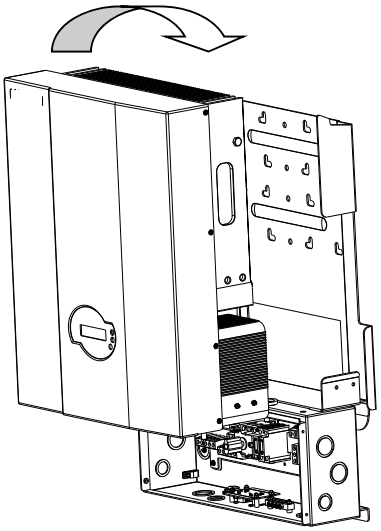

Fig 5.5.2.2 Hang the inverter on the mounting bracket carefully

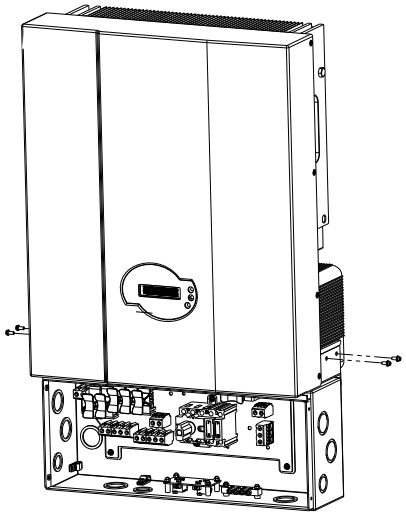

Fig 5.5.2.3 Fasten the screws at the sides of the inverter

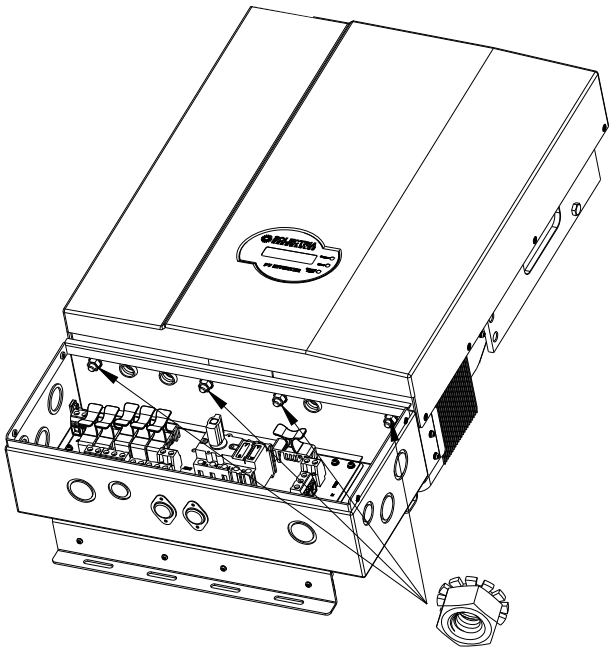

Fig 5.5.2.4 Fasten the nuts that attach the inverter and wiring box

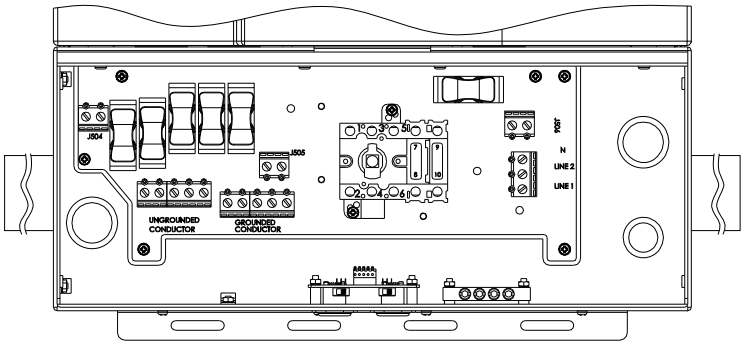

Fig 5.5.2.5 Connect the AC and DC wiring to their correct terminals

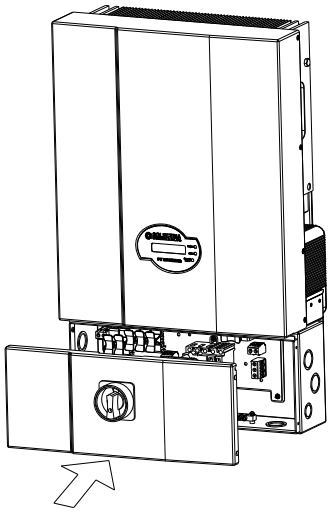

Fig 5.5.2.6 Put the wiring box cover back on

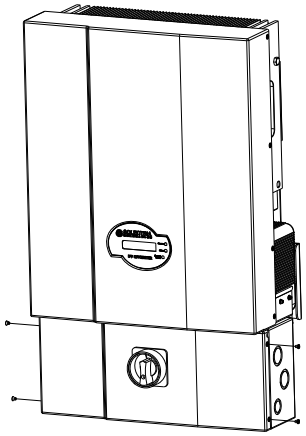

Fig 5.5.2.7 Fasten the cover screws then

1. Verify that DC/AC disconnect switches and breakers are turned off and locked out. Verify the absence of voltage with a voltmeter.
2. Remove the front cover of the wiring box by following the steps described in section 2.3.
3. Remove the cover plate used to cover the through holes of the wires and put it back to its original place as shown in the figure 5.5.2.1.
4. Hang the inverter on the mounting bracket as shown in the figure 5.5.2.2.
5. Fasten the bonding screws with a torque of 1.7Nm (15.6 in-lb) to the sides of the inverter as shown in the figure 5.5.2.3.
6. Fasten the attachment nuts with a torque of 5.88 Nm (51.96 in-lb) between the inverter and the wiring box for solid support and ground bonding as shown in the figure 5.5.2.4.
7. Tighten the nuts with a torque of 1.7Nm (15.6 in-lb) when performing steps 8 and 9.
8. For the AC wire connections, connect the WHITE AC wire to the J506 “WHITE” terminal. If it is originally 208 / 240 V system, then connect the RED, BLACK AC wire to the disconnect switch. If it is originally 277 V system, then connect the RED wire to the disconnect switch and connect the BLACK AC wire to the J506 “BLACK for 277V” terminal. Please refer to section 2.3 for further details.
9. In a negatively grounded system, connect the RED DC wire to the disconnect switch and connect the BLACK DC wire to the J505 terminal as shown in the figure 2.5.1.1. If the system is positively grounded, connect the red DC wire to the J505 terminal and connect the black DC wire to the disconnect switch as shown in the figure D.1. Please refer to the section 2.3.2 for further details.
10. Put the covers of the wiring box back as shown in the figure 5.4.3.2.6. Fasten the screws as shown in the figure 5.5.2.7.
11. Unlock Turn ON the DC/AC disconnect switch and breakers while wearing personal protective equipment.

6 Product Warranty & RMA Policy

6.1 Warranty Policy

The Solectria Renewables Warranty Policy is stated below.

Solectria Renewables Warranty Coverage:

Solectria Renewables Limited Warranties are provided by Solectria Renewables, LLC. ("Solectria Renewables") and cover defects in workmanship and materials. Solectria Renewables' price for the products is based on inclusion of these limited warranty provisions and disclaimers. In the event of a conflict between the terms of this Limited Warranty and any terms and conditions proposed by purchasers of Solectria Renewables' products, these Limited Warranty provisions shall govern the parties' obligations with respect to warranty coverage for defective products.

Duration of a Solectria Renewables Warranty Period:

The warranty period is 60 months from the date of purchase of the **PVI 6500-7500 Inverter** by the end user or 64 months after the delivery date from Solectria Renewables to distributor or dealer/installer, whichever is shorter. If a warranty extension has been purchased, the term is defined as extension beyond 60 months. For example, if a 5-year extension (to 10 years total) is purchased, the term becomes 120 months from date of purchase.

If Solectria Renewables repairs or replaces a product, its warranty continues for the remaining portion of the original Warranty Period or 90 days from the date of the return shipment to the customer, whichever is greater.

Solectria Renewables obligation to repair or replace a defective product under this warranty is contingent upon Solectria Renewables receiving full and timely payment for the warranted products and associated shipping. Solectria Renewables Warranty Coverage is voidable, at Solectria Renewables' sole option, if full payment for products and associated shipping is not received in full and in a timely manner by Solectria Renewables. Please contact Solectria Renewables Customer Service for further details on other products.

What will Solectria Renewables do?

Solectria Renewables will, at its sole option, repair or replace the defective product free of charge, provided that you notify Solectria Renewables of the product defect within the Warranty Period for your product, and provided that Solectria Renewables, through inspection, establishes the existence of such a defect and that it is covered by the Limited Warranty.

Solectria Renewables will, at its sole option, use new and/or reconditioned parts in performing warranty repair and building replacement products. Solectria Renewables reserves the right to use parts or products of original or improved design in the repair or replacement. All replaced products and all parts removed from repaired products become the property of Solectria Renewables.

Solectria Renewables will attempt to repair the unit within a reasonable time period (there is no reimbursement for lost energy production.)

For three-phase inverters 10kW and higher:

Solectria Renewables covers parts, travel and labor necessary to repair the product and shipment of parts to and from the customer via a Solectria Renewables-selected non-expedited surface freight within the contiguous United States, Canada and Mexico. For Alaska, Hawaii and all other installation locations Solectria Renewables will supply necessary parts as needed for warranty repairs; however labor and travel are not included. Contact Solectria Renewables customer service for details on freight policy for return shipments outside of the contiguous United States and Canada.

For single-phase inverters 7.5kW and lower:

Solectria Renewables covers replacement inverters or parts necessary to repair the product and shipments of parts to and from the customer via a Solectria Renewables-selected non-expedited surface freight within the contiguous United States, Canada and Mexico. For Alaska, Hawaii and all other installation locations Solectria Renewables will cover the cost of return shipment of product one way from the customer.

The warranty does not include customs fees, broker fees or other taxes that may be imposed by the government agency. Contact Solectria Renewables customer service for details on freight policy for return shipments outside of the contiguous United States and Canada.

In the event an extended warranty option has been purchased, this extended warranty only applies to exposed outdoor locations (defined as rooftop or open/unprotected locations) if the product has been purchased to include the gasket-sealed AC and DC disconnect option or has a protective cover around 3 sides of inverter unit (back and sides) and over the top, 4"-60" away from back and top and 30"-96" from sides.

Obtaining Service:

If your product requires troubleshooting or warranty service, contact your distributor or dealer/installer. If you are unable to contact your distributor or dealer/installer, or the distributor or dealer/installer is unable to provide service, contact Solectria Renewables directly at the number listed on the website in the customer service section for your product.

Solectria Renewables may send personnel to a jobsite or contract with an area technician, installer or other authorized, trained service personnel to service/replace components.

Reimbursement for contracted services: Solectria Renewables will submit a purchase order to the designated service personnel before work is performed. This purchase order will cover time expected for the required service and most likely an allocation for travel time.

Direct returns may be performed according to the Solectria Renewables Return Material Authorization Policy.

In any warranty claim, dated proof of purchase must accompany the product and the product must not have been disassembled or modified without prior written authorization by Solectria Renewables.

Proof of purchase may be in any one of the following forms:

- The dated purchase receipt from the original purchase of the product at point of sale to the end user, or

- The dated distributor or dealer/installer invoice or purchase receipt showing original equipment manufacturer (OEM) status, or

- The dated invoice or purchase receipt showing the product exchanged under warranty.

Solectria Renewables provides technical assistance Monday-Friday, 8:30am-7pm EST and on call technical support is provided before and after business hours.

What does the Solectria Renewables warranty not cover?

Solectria Renewables Limited Warranties do not cover normal wear and tear of the product or costs related to the removal, installation, or troubleshooting of the customer's electrical systems. These warranties do not apply to and Solectria Renewables will not be responsible for any defect in or damage to:

a) The product, if it has been misused, neglected, improperly installed, physically damaged or altered, either internally or externally, or damaged from improper use or use in an unsuitable environment;

b) The product, if it has been subjected to fire, water, generalized corrosion, biological infestations, acts of God or input voltage that creates operating conditions beyond the maximum or minimum limits listed in the Solectria Renewables product specifications including high input voltage from generators and lightning strikes;

c) The product, if repairs have been done to it other than by Solectria Renewables or authorized, trained service personnel;

d) The product, if it is used as a component part of a product expressly warranted by another manufacturer;

e) The product, if its original identification (trademark, serial number) markings have been defaced, altered, or removed;

f) The product, if it has been damaged in shipping (unless approved in writing by Solectria Renewables);

g) Any installation and operation beyond the scope covered by relevant safety regulations (UL1741, NEC (Canadian Electrical Code), etc.);

h) Third party monitoring equipment, including Fat Spaniel hardware, , is not covered under the Solectria Renewables' warranty.

DISCLAIMER

SOLECTRIA RENEWABLES LIMITED WARRANTIES ARE THE SOLE AND EXCLUSIVE WARRANTY PROVIDED BY SOLECTRIA RENEWABLES IN CONNECTION WITH YOUR SOLECTRIA RENEWABLES PRODUCT AND ARE, WHERE PERMITTED BY LAW, IN LIEU OF ALL OTHER WARRANTIES, CONDITIONS, GUARANTEES, REPRESENTATIONS, OBLIGATIONS AND LIABILITIES, EXPRESS OR IMPLIED, STATUTORY OR OTHERWISE IN CONNECTION WITH THE PRODUCT, HOWEVER ARISING (WHETHER BY CONTRACT, TORT, NEGLIGENCE, PRINCIPLES OF MANUFACTURER'S LIABILITY, OPERATION OF LAW, CONDUCT, STATEMENT OR OTHERWISE), INCLUDING WITHOUT RESTRICTION ANY IMPLIED WARRANTY OF MERCHANTABILITY OR CONDITION OR QUALITY OF THE PRODUCT, ANY IMPLIED WARRRANTY OF FITNESS FOR A PARTICULAR PURPOSE, OR ANY IMPLIED WARRANTY OF DISTRIBUTOR OR DEALER/INSTALLER ABILITY,ALL OF WHICH ARE EXPRESSLY DISCLAIMED TO THE FULLEST EXTENT PERMITED BY LAW

ANY IMPLIED WARRANTIES OF MERCHANTABILITY OR FITNESS FOR A PARTICULAR PURPOSE, OR ANY IMPLIED WARRANTY OF DISTRIBUTOR OR DEALER/INSTALLER ABILITY, TO THE EXTENT REQUIRED UNDER APPLICABLE LAW TO APPLY TO THE PRODUCT, SHALL BE LIMITED IN DURATION TO THE PERIOD STIPULATED UNDER THIS LIMITED WARRANTY, TO THE FULLEST EXTENT PERMITTED BY LAW

IN NO EVENT WILL SOLECTRIA RENEWABLES, LLC, INCLUDING ITS SUPPLIERS, MANUFACTURERS, VENDORS, SUBCONTRACTORS, DISTRIBUTORS, DEALERS AND ANY OTHER AFFILIATES BE LIABLE FOR ANY SPECIAL, DIRECT, INDIRECT, INCIDENTAL OR CONSEQUENTIAL DAMAGES, LOSSES, COSTS OR EXPENSES HOWEVER ARISING WHETHER IN CONTRACT OR TORT INCLUDING WITHOUT RESTRICTION ANY ECONOMIC LOSSES OF ANY KIND, ANY LOSS OR DAMAGE TO PROPERTY, INCLUDING LOSS OF USE AND INTANGIBLE HARM OF ANY KIND, AND ANY PHYSICAL DAMAGE OR OTHER DAMAGE ARISING FROM OR AS A RESULT OF ANY USE. MISUSE OR ABUSE OF THE PRODUCT, OR THE INSTALLATION, INTEGRATION OR OPERATION OF THE PRODUCT, REGARDLESS OF WHETHER SUCH INSTALLATION, INTEGRATION OR OPERATION WAS PERFORMED PROPERLY OR IMPROPERLY.

Solectria Renewables neither assumes nor authorizes any other person to assume for it any other liability in connection with the repair or replacement of the Product.

Exclusions of the Policy:

PVI 6500-7500 Inverter Installation and Operation Manual

If your product is a consumer product, the applicable law may not permit exclusion of implied warranties. To the extent permitted by the applicable law such warranties are limited to the duration of this Limited Warranty. Some jurisdictions do not allow any limitations on the duration of an implied warranty, or exclusions on implied warranties, or on the limitation or exclusion of incidental or consequential damages, so the above limitation(s) or exclusion(s) may not apply to you. This Limited Warranty gives you specific legal rights. You may have other rights, which may vary from state to state or province to province.

WITHOUT LIMITING THE GENERALITY OF THE FOREGOING, UNLESS SPECIFICALLY AGREED TO BY IT IN WRITING, SOLECTRIA RENEWABLES

(a) MAKES NO WARRANTY AS TO THE ACCURACY, SUFFICIENCY OR SUITABILITY OF ANY TECHNICAL OR OTHER INFORMATION PROVIDED IN MANUALS OR OTHER DOCUMENTATION PROVIDED BY IT IN CONNECTION WITH THE PRODUCT; AND

(b) ASSUMES NO RESPONSIBILITY OR LIABILITY FOR LOSSES, DAMAGES, COSTS OR EXPENSES, WHETHER SPECIAL, DIRECT, INDIRECT, CONSEQUENTIAL OR INCIDENTAL, WHICH MIGHT ARISE OUT OF THE USE OF SUCH INFORMATION. THE USE OF ANY SUCH INFORMATION WILL BE ENTIRELY AT THE USERS' RISK.

Tesla, Inc.
Ex - 1014
Page 75 of 86

WARNING: LIMITATIONS ON USE

Please refer to your product user manual for limitations on uses of the product. Specifically, please note that Solectria Renewables products are not intended for use in connection with life support systems and Solectria Renewables makes no warranty or representation in connection with any use of the product for such purposes.

Please review our Return Merchandise Authorization Policy for returning product to Solectria Renewables.

6.2 Return Material Authorization Policy

Please review our Return Merchandise Authorization Policy below after reviewing our Solectria Renewables Warranty Policy.

Obtaining a required, Return Material Authorization:

Before returning a product directly to Solectria Renewables you must obtain a Return Material Authorization (RMA) number and the correct factory "Ship To" address. Products must also be shipped prepaid. Product shipments will be refused and returned at your expense if they are unauthorized, returned without an RMA number clearly marked on the outside of the shipping box, if they are shipped collect, or if they are shipped to the wrong location.

Information Solectria Renewables needs when you are obtaining service:

1) The model names and serial number of your product

Preparing the product for shipping:

1) Package the unit safely, preferably using the original box and packing materials. Please ensure that your product is shipped fully insured in the original packaging or equivalent. This warranty will not apply where the product is damaged due to improper packaging.

2) Include the following:

   a. The RMA number supplied by Solectria Renewables, LLC clearly marked on the outside of the box

   b. A return address to which the unit can be shipped. Post office boxes are not acceptable.

   c. A contact telephone number where you can be reached during work hours.

   d. A brief description of the problem.

Ship the unit prepaid to the address provided by your Solectria Renewables customer service representative.

Returning a product from outside of the USA or Canada:

In addition to the above, you MUST include return freight funds and are fully responsible for all documents, duties, tariffs, and deposits.

7 Technical Data

7.1 Technical Information and specifications

Input (DC) from PV array:

- Maximum open circuit voltage of PV array: 600V DC

WARNING: Local codes must be followed to calculate the maximum number of PV modules allowed for a maximum inverter open circuit voltage (OCV) of 600V DC in extreme cold temperatures for the installation location.

The open circuit voltage of PV modules depends on the cell temperature and the solar irradiation. The highest open circuit voltage occurs when the PV modules are at the coldest temperature and in bright sun. (See the following figure – Fig. 7.5)

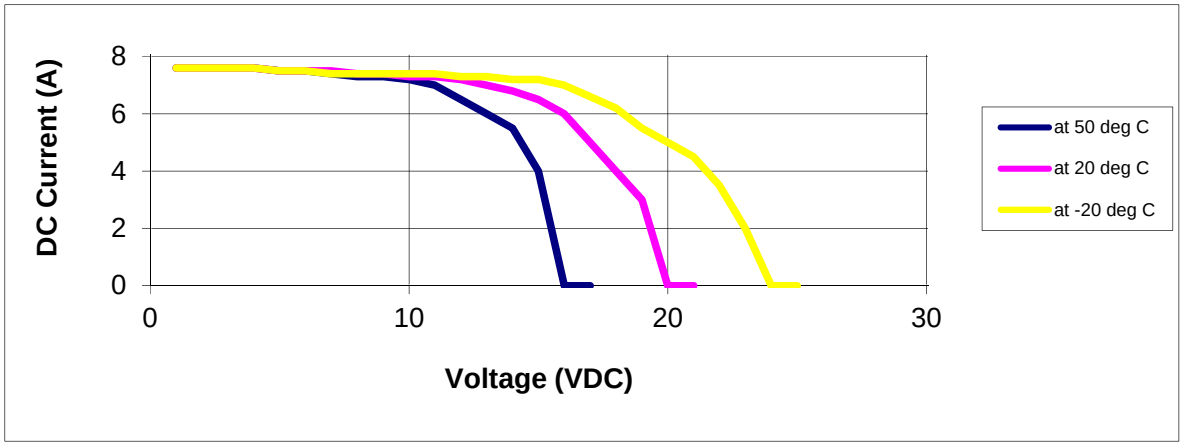

Fig. 7.1.1 Example representative ~100W PV module voltage – current characteristic at various cell temperatures

Because PV modules also have a reduction in voltage at high cell temperatures, you must make sure the MPP voltage of the strings will not drop below the minimum inverter DC input voltage of 230V DC in very hot temperature conditions, including wire losses and voltage drop in order to avoid reduced system performance.

Both the maximum open circuit voltage (OCV) when at cold extreme and minimum MPP voltage when at hot extreme can be calculated for a PV module using its specification sheet. Solectria Renewables' online PV module string sizing tool can then be used to determine how many modules can be used in a string.

Inverter Specifications

Name-Part number	PVI 6500		PVI 7500
Grid output (AC)			
Grid voltage, nominal (VAC)	208	240	277 VAC
Grid voltage, operating range (VAC)	244~304@277 VAC 212~264@240 VAC 184~228@208 VAC		
Grid frequency, nominal	60 Hz		
Grid frequency, operating range	59.3~60.5 Hz		
Maximum output power	6500W		7500W
Maximum output current	23.5A@277 VAC 27.1A@240 VAC 31.3A@208 VAC		27.1A@277 VAC 31.3A@240 VAC 36.1A@208 VAC
Output over current protection	30A@277 VAC 35A@240 VAC 40A@208 VAC		35A@277 VAC 40A@240 VAC 50A@208 VAC
Maximum output fault current	55 A		
Grid output (AC)			
Startup current	<2A		
Maximum grid backfeed current	0 A		
Waveform	True sine		
Power factor	>0.99 @ nominal power		
Total Harmonic Distortion	<3%		
DC Component	<0.5%		
Phase	Split Phase or Single phase		
Solar input (DC)			
Input voltage range	220~600 VDC		
Input voltage range, MPPT	230 V ~ 500 VDC		
Maximum input voltage	600 VDC		
PV start voltage (strike voltage)	260 VDC		
Maximum input current	35 A		
Maximum input short circuit current	44 A		
Number of fused string inputs	5 x 15A		
Efficiency			
Maximum efficiency	96.7 % @ 277VAC 96.3 % @ 240VAC 96.0 % @ 208VAC		96.7 % @ 277VAC 96.5 % @ 240VAC 96.2 % @ 208VAC
CEC efficiency	96.0 % @ 277VAC 96.0 % @ 240VAC 95.5 % @ 208VAC		96.0 % @ 277VAC 96.0 % @ 240VAC 95.5 % @ 208VAC
Night-time tare loss	0.5W		
Environmental			
Operating temperature range	-25 °C ~ +50 °C (-13° ~ +122°F)		
Storage temperature range	-25 °C ~ +65 °C (-13° ~ +149°F)		
Maximum full power operating ambient	55 °C (131°F)		50 °C (122°F)
Relative humidity	Max. 95%		

Noise level at full load	< 47db(A) at 1m	
Mechanical		
Outdoor enclosure	NEMA 3R, Rainproof	
Cooling	Cooling fan	
DC Input terminals	Accepts wire size of #10 to #6 AWG	
AC Output terminals	Accepts wire size of #10 to #6 AWG	
DC conduit connection access	1” knockout (1.38") / ¾” knockout (1.06")	
AC conduit connection access	1” knockout (1.38") / ¾” knockout (1.06")	
Communication connection	¾” knockout (1.06") / ½” knockout (0.79")	
Mechanical		
Weight / Shipping weight	41 kg / 47 kg (90 lb / 104 lb)	
Dimensions (HxWxD)	28.8 x 17.2 x 8.2" (732 x 438 x 208 mm)	
Shipping dimensions (HxWxD)	33.1 x 21.65 x 13.98" (840 x 550 x 355 mm)	
Communication Interface		
Communication	RS232 and RS485	
Communication protocol	MODBUS	
LCD display	Yes	
LED indicators	Red / Green / Yellow	
Positive ground inverters		
Name-Part number	**PVI 6500**	**PVI 7500**
Model name	PVI 6500-PG	PVI 7500-PG
Certifications		
UL 1741, FCC Part 15 B, IEEE 1547, IEEE C62.41.2, IEEE C37.90.1, CSA22.2#107.1		

* Factory settings can be adjusted with the approval of the utility. This unit is provided with adjustable trip limits and may be aggregated above 30kW on a single Point of Common Coupling.

Adjustable voltage, Frequency and Reconnection Settings

Setting	Range	Default	Accuracy
Over-voltage (%)	108.75~110	110	±1
Under-voltage (%)	85~90	88	±1
Over-voltage Reconnect voltage* (%)	105.83~110	105.83	±1
Under-voltage Reconnect voltage* (%)	85~91.67	91.67	±1
Over-frequency (Hz)	60.4~61	60.49	±0.02
Under-frequency (Hz)	57~59.8	59.31	±0.02
Over-voltage clearing time (cycle)	59~120	59	±1
Under-voltage clearing time (cycle)	119~300	119	±1
Over-frequency clearing time (cycle)	9~12	9	±1
Under-frequency clearing time (cycle)	9~18000	9	±1
Setting	**Range**	**Default**	**Accuracy**
AC high-voltage limit (%)	100~110	109	±1
Reconnect delay** (s)	10~600	20	±0.01

* The default values are within the Range B of ANSI C84.1

** Once a grid failure, the inverter waits 300 seconds before the next connection to the grid.

Measurement precision

	Range	Resolution		Accuracy
		Display	Measurement	
Input voltage (VDC)	0~640V	0.1V	0.6V	±2V
Input Current (IDC)	0~31000mA	100mA	31mA	±300mA
Grid voltage (VAC)	0~300V	0.1V	0.6V	±1V
Grid current (IAC)	0~26000mA	100mA	52mA	±250mA
Grid frequency (Hz)	45~65Hz	0.1Hz	0.004Hz	±0.02Hz
Output power (W)	0~7800W	1W	1W	±40W
Energy yield (kWh)	$0\sim9.99\times10^{6}$kWh	0.1kWh	2.2×10^{-6}kWh	1%
Operating hours (h)	0~65535H	1H	1s	0.03%

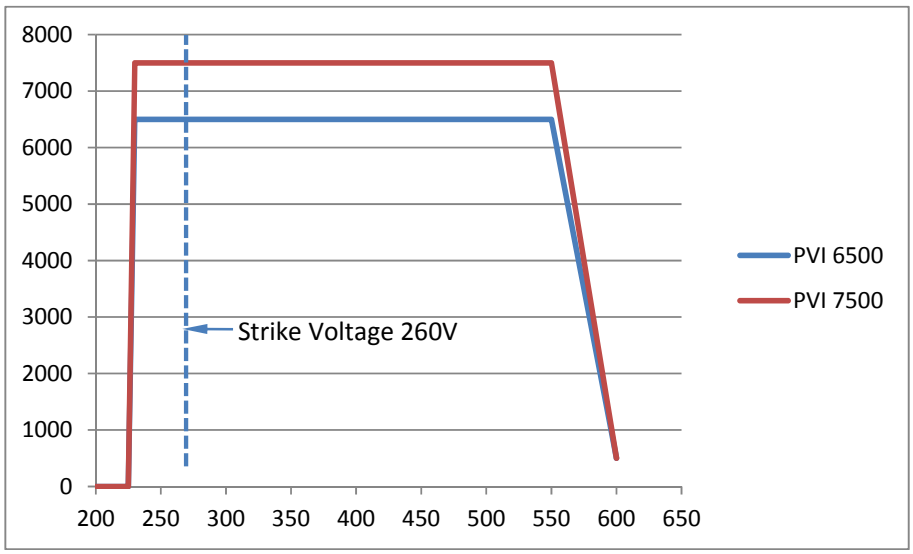

Fig. 7.1.2 AC Output power curve of a PVI 6500 and 7500

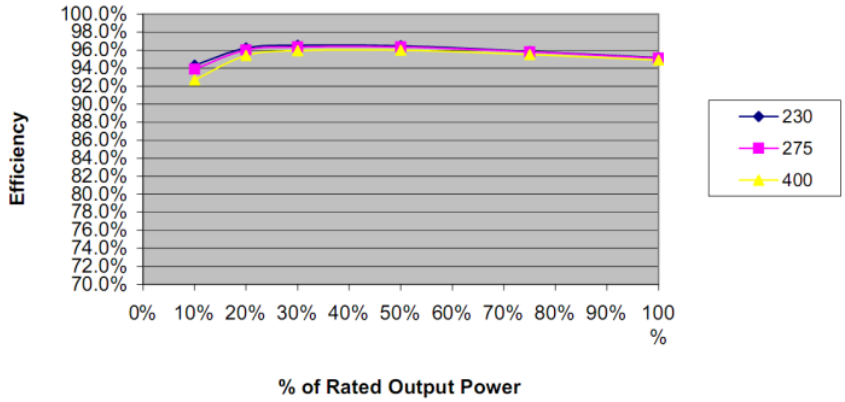

Fig 7.1.3 Example CEC Efficiency of the PVI 6500 = 96.0% (240V) at 3 DC voltages

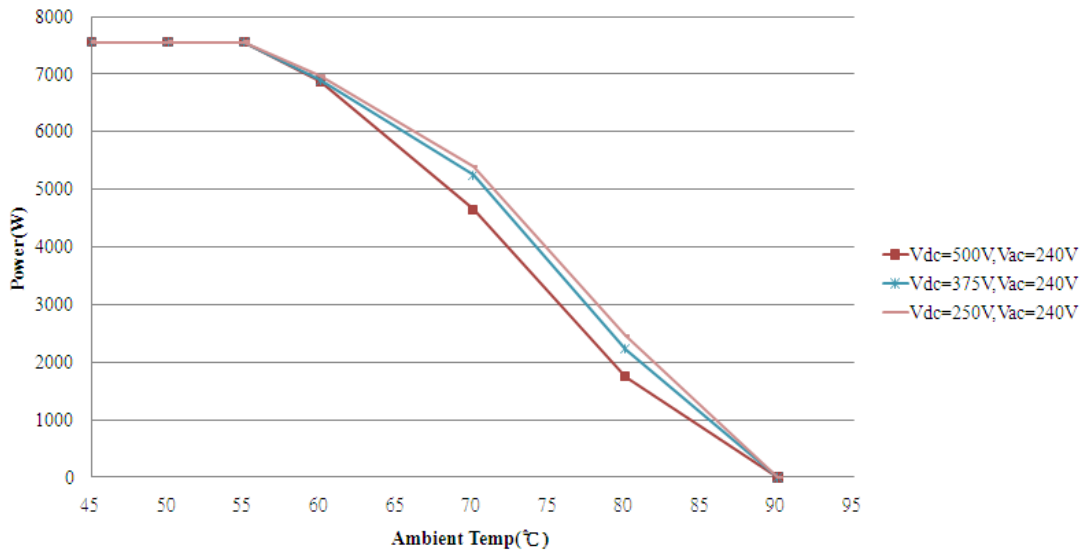

Fig 7.1.4 Temperature de-rating curve of the PVI 7500 (240VAC) at 3 DC voltages

Fig. 7.1.5 Serial Number Key (description) PVI 3000 - 7500

Appendices

Appendix A: PVI 6500/7500 brochure

The brochure can also be viewed on the website: http://www.solren.com/pvi3000-7500.html
The PDF version datasheet link is: http://www.solren.com/downloads/PVI6500-7500Manual.pdf

Appendix B: Example string sizing PVI 6500/7500

String sizing tool, "PV System Builder" specific link at: http://www.solren.com/stringSizing.html

Appendix C: Contact Information

Authorized Distributors
Specific link: http://www.solren.com/distributors.html

Solectria Renewables LLC
360 Merrimack Street
Building 9
Lawrence, Massachusetts, 01843
USA

Tel: 978.683-9700
Fax: 978.683-9702
Email: inverters@solren.com
Website: www.solren.com

Appendix D – Positively Grounded Option

Ref: Connection of the DC wiring

See section 2.5 Connection of the DC wiring in the Wiring section for standard wiring for negatively grounded systems and refer to it while connecting for positively grounded systems using this appendix including use of all the warnings and cautions.

CAUTION!

For positively grounded systems, polarities of each DC input from a PV string shall be correctly connected to the "Grounded Conductor" (positive) and "Ungrounded Conductor" (negative) terminals respectively. The DC voltage must be less than 600V in any condition.

The PVI 6500-7500 inverter supports positively grounded arrays. To configure the inverter for positive grounded arrays, the integrated disconnect must break the ungrounded, negative conductor.

- Ensure that the inverter is off and de-energized from both AC and DC sides.
- Disconnect the black DC wire connected to terminal “C” on terminal block.
- Disconnect the red DC wire connected to terminal “D” on the disconnect switch.
- Connect the red DC wire to terminal “C” on terminal block J505.
- Connect the black DC wire to terminal “D” on the disconnect switch.
- Tighten the set screws to a torque of 1.7Nm (15.6 in-lb.))

DC wiring for Positively Grounded Systems for use with Integrated String Fuses

The PVI 6500/7500 inverter supports PV positively grounded arrays. In this case the positive polarity of the DC input voltage from the PV string shall be connected to the GROUNDED CONDUCTOR terminal and the negative polarity of the DC input voltage from the PV string shall be connected to the UNGROUNDED CONDUCTOR terminal as shown in the figure D.1.

The positively grounded setting is that the red DC wire is connected to the terminal labeled “C” of J505, and the black DC wire is connected to the terminal labeled “D” of disconnect switch.

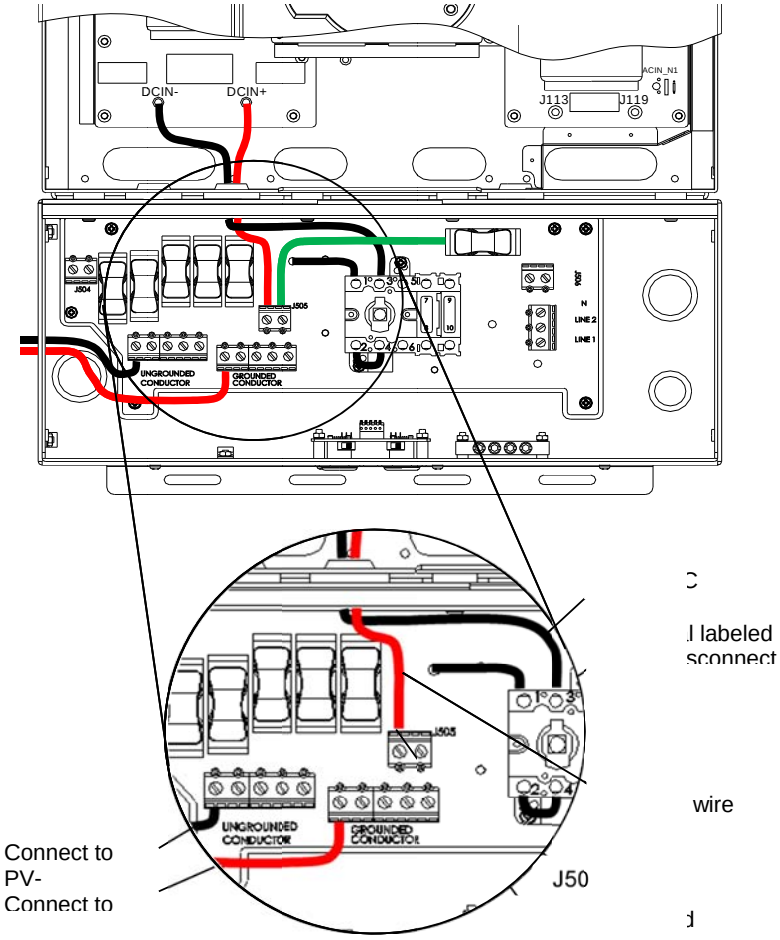

Fig D.1 Positively Grounded Setting and DC conductor connections (using PV string fuses)

- The “+” cable of the DC input voltage shall be connected to the terminal labeled “GROUNDED CONDUCTOR” and the “-” wire of the DC input voltage shall be connected to the terminal labeled “UNGROUNDED CONDUCTOR”.
- Avoid using wire nuts to join any wires together or to make any connections anywhere in the PV system. Wire nuts are a frequent cause of unreliable and resistive connections.
- Connect the equipment ground conductor to the screw of the ground bar labeled
- Tighten the screws to a torque of 1.7Nm (15.6 in-lb).

Connection of the DC wires for Positively Grounded Arrays bypassing the internal DC Fuses

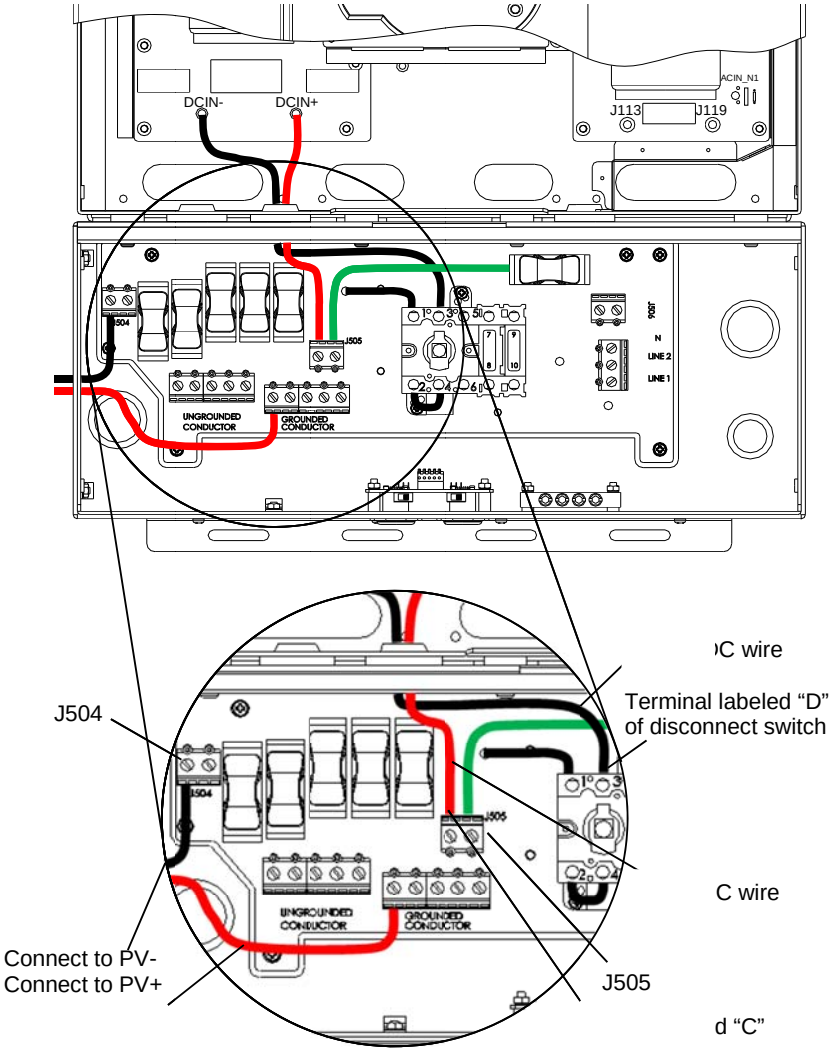

Fig D.2 Positively Grounded Setting and DC conductor connections (bypassing PV string fuses)

Avoid using wire nuts to join any wires together or to make any connections anywhere in the PV system. Wire nuts are a frequent cause of unreliable and resistive connections.

See section 2.3.2, Connection of the DC wiring in the wiring section for standard wiring for negatively grounded systems and refer to it while connecting for positively grounded systems using this appendix including use of all the warnings and cautions.

Appendix E. PVI 6500-7500 PV Inverter Fault Report Form

Basic information	
Model (i.e. "PVI 7500")	
Serial number	
Purchased from	
Purchased date	_____Y/_____M/_____D
Installation information	
Type of installation	☐Residential ☐Commercial
Installation date	_____Y/_____M/_____D
First operation date	_____Y/_____M/_____D
AC wire size and length	____ AWG wire size feet length of wire
DC wire size and length	____ AWG wire size feet length of wire
PV panel mount	☐Roof ☐Pole ☐Ground
Solar tracker	☐Yes ☐No
PV strings	
Output power	
Normal voltage range	Vdc
Peak open circuit voltage	Vdc
Normal current rating	Adc
maximum current rating	Adc
Number of panels	
Number of series/parallel	_____S/_____P
PV panel brand & model	
Fault/error information (please write down exact words that appear on the LCD)	
Fault message 1 on LCD	
Fault message 2 on LCD	
Fault message 3 on LCD	
Fault message 4 on LCD	
Fault message 5 on LCD	
Fault message 6 on LCD	
Description of problem	-Does this failure happen regularly or intermittently? -Can you reproduce the failure? -How much energy has been produced thus far? (kWh)

Form filled out by (name & signature) Date

Appendix F – UL1741/IEEE1547 and CSA22.2#107.1 Listing Letter

Intertek

Listing Verification

The following Company/product(s) is listed for use with the ETL Listed Mark(s).

Date Issued
May 10, 2011

Issued To
Solectria Renewables, LLC

Product
PV Inverter (Grid-tied)

Standard(s)
Inverters, Converters, Controllers & Interconnection System Equipment for Use With Distributed Energy Resources (UL-1741) & General Use Power Supplies (CAN/CSA-C22.2 No. 107.1)

Model(s)
PVI 6500, PVI 7500

C ETL LISTED US
Intertek

Joanne Nutting
Senior Directory Coordinator

Intertek Intertek Intertek Intertek Intertek Intertek Intertek Intertek

165 Main Street, Cortland NY 13045 | T 888-347-5478 | F 607-758-9608 | www.intertek.com